US 20030165241A1

(19) United States

(12) Patent Application Publication (10) Pub. No.: US 2003/0165241 A1

Fransdonk (43) Pub. Date: Sep. 4, 2003

(54) METHOD AND SYSTEM TO DIGITALLY SIGN AND DELIVER CONTENT IN A GEOGRAPHICALLY CONTROLLED MANNER VIA A NETWORK

(76) Inventor: **Robert W. Fransdonk**, Vista, CA (US)

Correspondence Address:
BLAKELY SOKOLOFF TAYLOR & ZAFMAN
12400 WILSHIRE BOULEVARD, SEVENTH FLOOR
LOS ANGELES, CA 90025 (US)

(21) Appl. No.: **10/321,062**

(22) Filed: **Dec. 16, 2002**

Related U.S. Application Data

(63) Continuation of application No. PCT/US01/19271, filed on Jun. 15, 2001.

(60) Provisional application No. 60/212,215, filed on Jun. 16, 2000.

Publication Classification

(51) **Int. Cl.**[7] **H04K 1/00**

(52) **U.S. Cl.** **380/258**

(57) **ABSTRACT**

A method and system to digitally sign a content license associated with content, and to distribute content via a network in a geographically controlled manner, commences when a content provider generates a content license and signs the content license with a symmetric key. The symmetric key may be used to encrypt the content. In one embodiment consistent with the invention, the symmetric key may be used to encrypt a product key, which is in turn used to encrypt the content. A content requestor requests delivery of the encrypted content. A content delivery system performs a content to determine a geographic location associated with the content requestor. The content requestor authorization process may also determine geographic access criteria associated with the content, and whether the geographic location complies with the geographic access criteria. The content delivery system will release the content for delivery to the content requestor if the content location complies with the geographic access criteria.

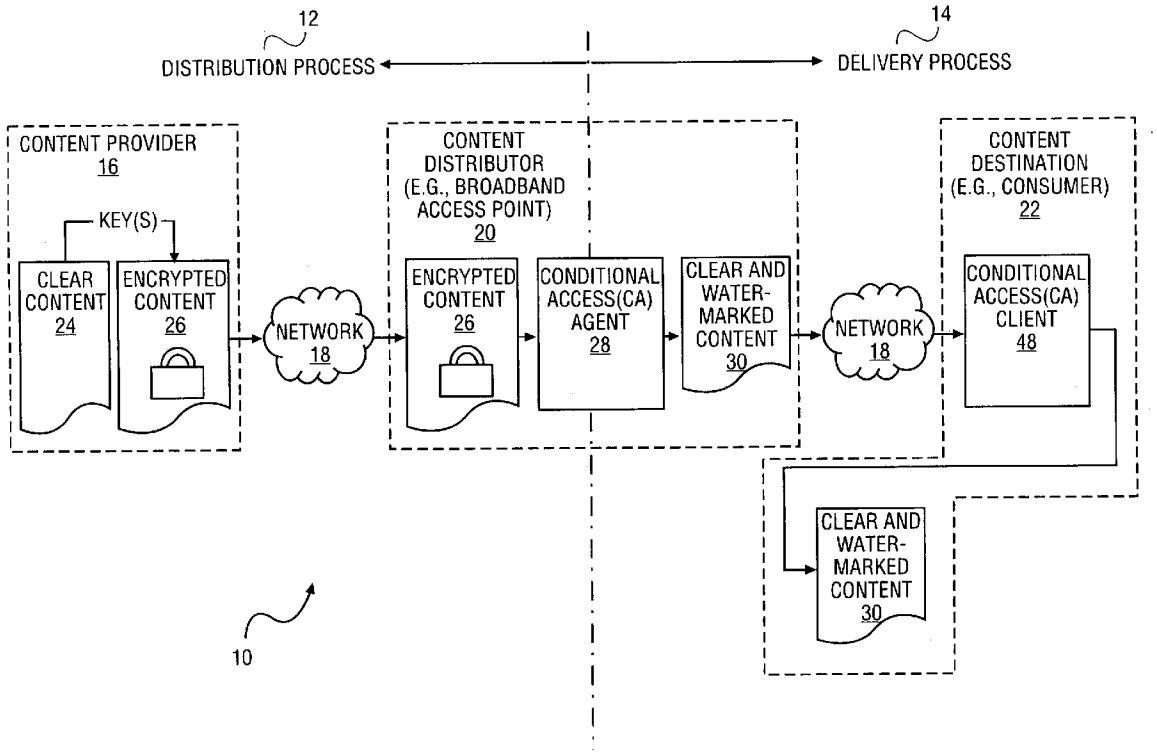

GOOGLE EXHIBIT 1008

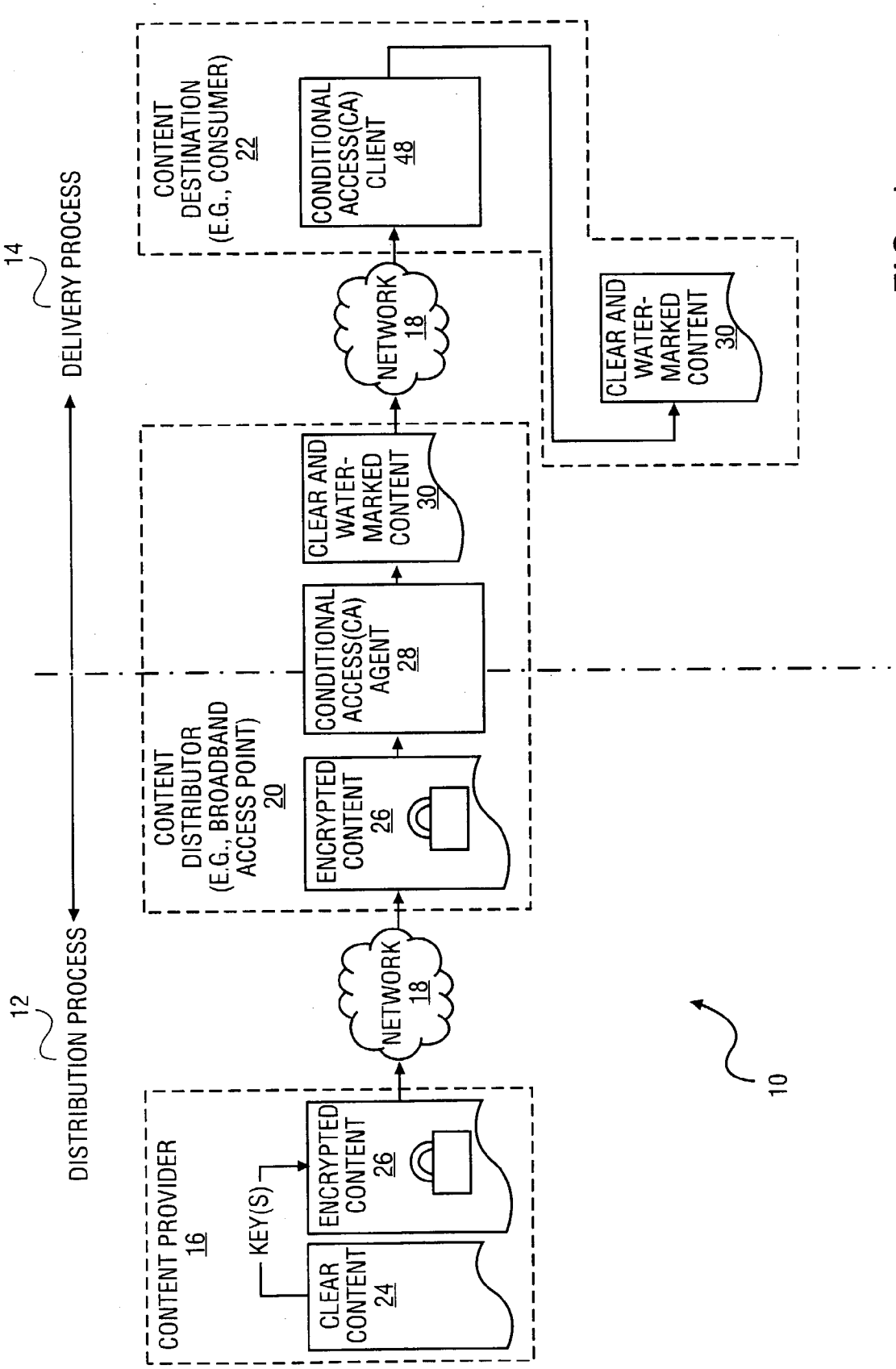
DELIVERY PROCESS
14
DISTRIBUTION PROCESS
12
CONTENT PROVIDER
16
KEY(S)
CLEAR CONTENT
24
ENCRYPTED CONTENT
26
NETWORK
18
CONTENT DISTRIBUTOR
(E.G., BROADBAND ACCESS POINT)
20
ENCRYPTED CONTENT
26
CONDITIONAL ACCESS(CA) AGENT
28
CLEAR AND WATER-MARKED CONTENT
30
NETWORK
18
CONTENT DESTINATION
(E.G., CONSUMER)
22
CONDITIONAL ACCESS(CA) CLIENT
48
CLEAR AND WATER-MARKED CONTENT
30
10

FIG. 1

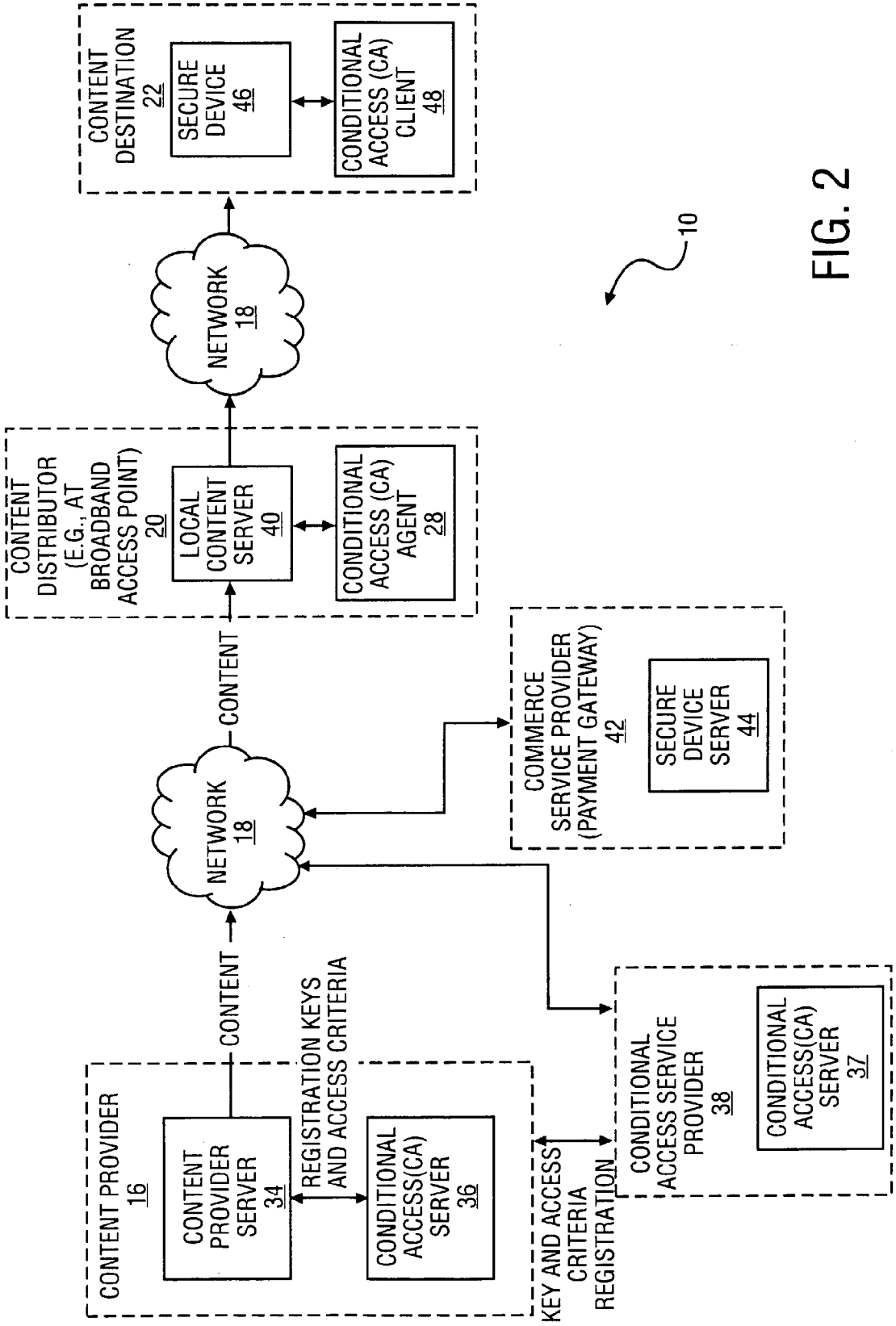
CONTENT DESTINATION 22
SECURE DEVICE 46
CONDITIONAL ACCESS (CA) CLIENT 48
NETWORK 18
10
CONTENT DISTRIBUTOR (E.G., AT BROADBAND ACCESS POINT) 20
LOCAL CONTENT SERVER 40
CONDITIONAL ACCESS (CA) AGENT 28
CONTENT
COMMERCE SERVICE PROVIDER (PAYMENT GATEWAY) 42
SECURE DEVICE SERVER 44
NETWORK 18
CONTENT
REGISTRATION KEYS AND ACCESS CRITERIA
CONTENT PROVIDER 16
CONTENT PROVIDER SERVER 34
CONDITIONAL ACCESS(CA) SERVER 36
KEY AND ACCESS CRITERIA REGISTRATION
CONDITIONAL ACCESS SERVICE PROVIDER 38
CONDITIONAL ACCESS(CA) SERVER 37

FIG. 2

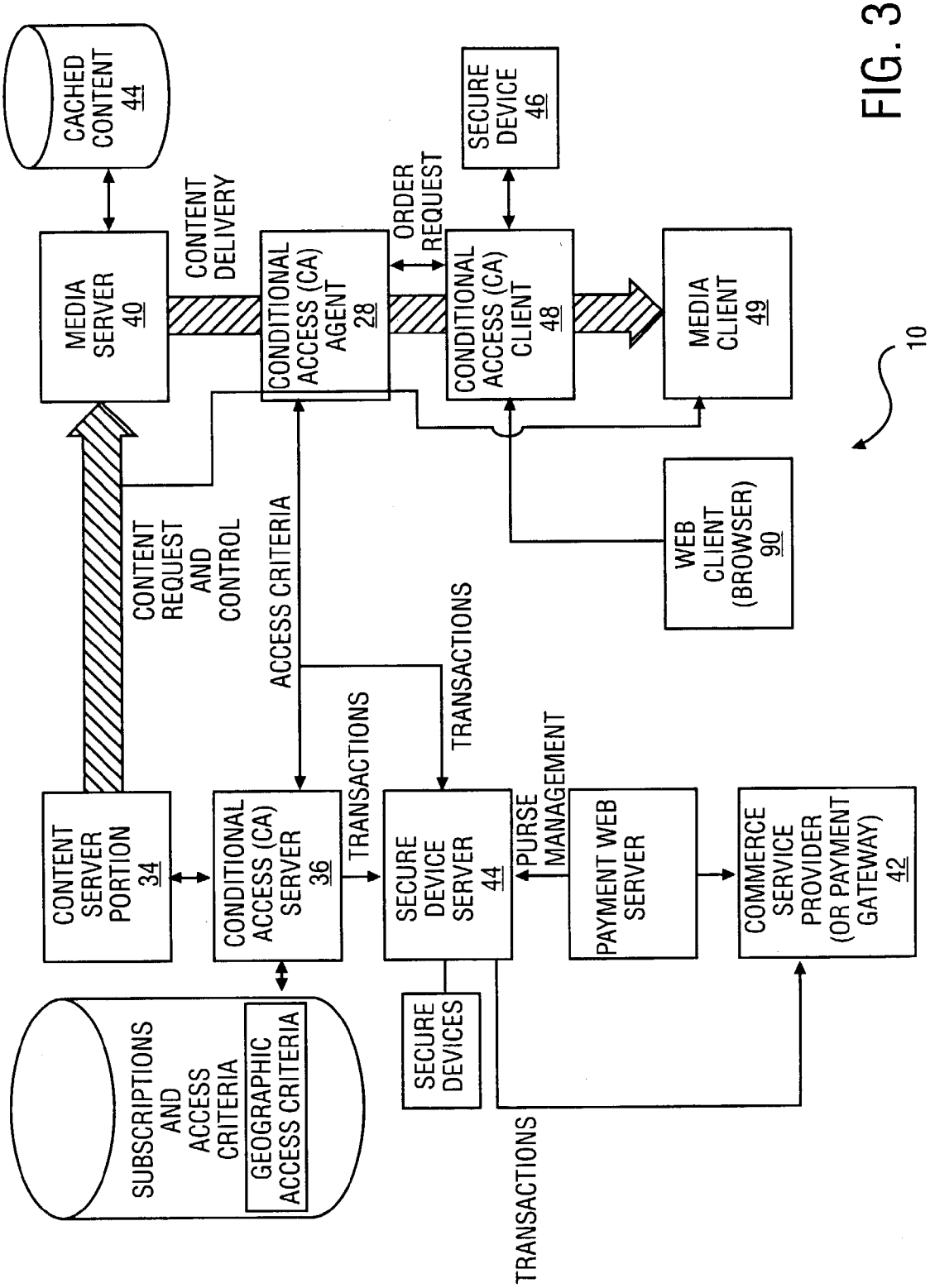
CACHED CONTENT 44
MEDIA SERVER 40
CONTENT DELIVERY
CONDITIONAL ACCESS (CA) AGENT 28
ORDER REQUEST
SECURE DEVICE 46
CONDITIONAL ACCESS (CA) CLIENT 48
MEDIA CLIENT 49
10
WEB CLIENT (BROWSER) 90
CONTENT REQUEST AND CONTROL
ACCESS CRITERIA
TRANSACTIONS
TRANSACTIONS
PURSE MANAGEMENT
CONTENT SERVER PORTION 34
CONDITIONAL ACCESS (CA) SERVER 36
SECURE DEVICE SERVER 44
PAYMENT WEB SERVER
COMMERCE SERVICE PROVIDER (OR PAYMENT GATEWAY) 42
SUBSCRIPTIONS AND ACCESS CRITERIA
GEOGRAPHIC ACCESS CRITERIA
SECURE DEVICES
TRANSACTIONS

FIG. 3

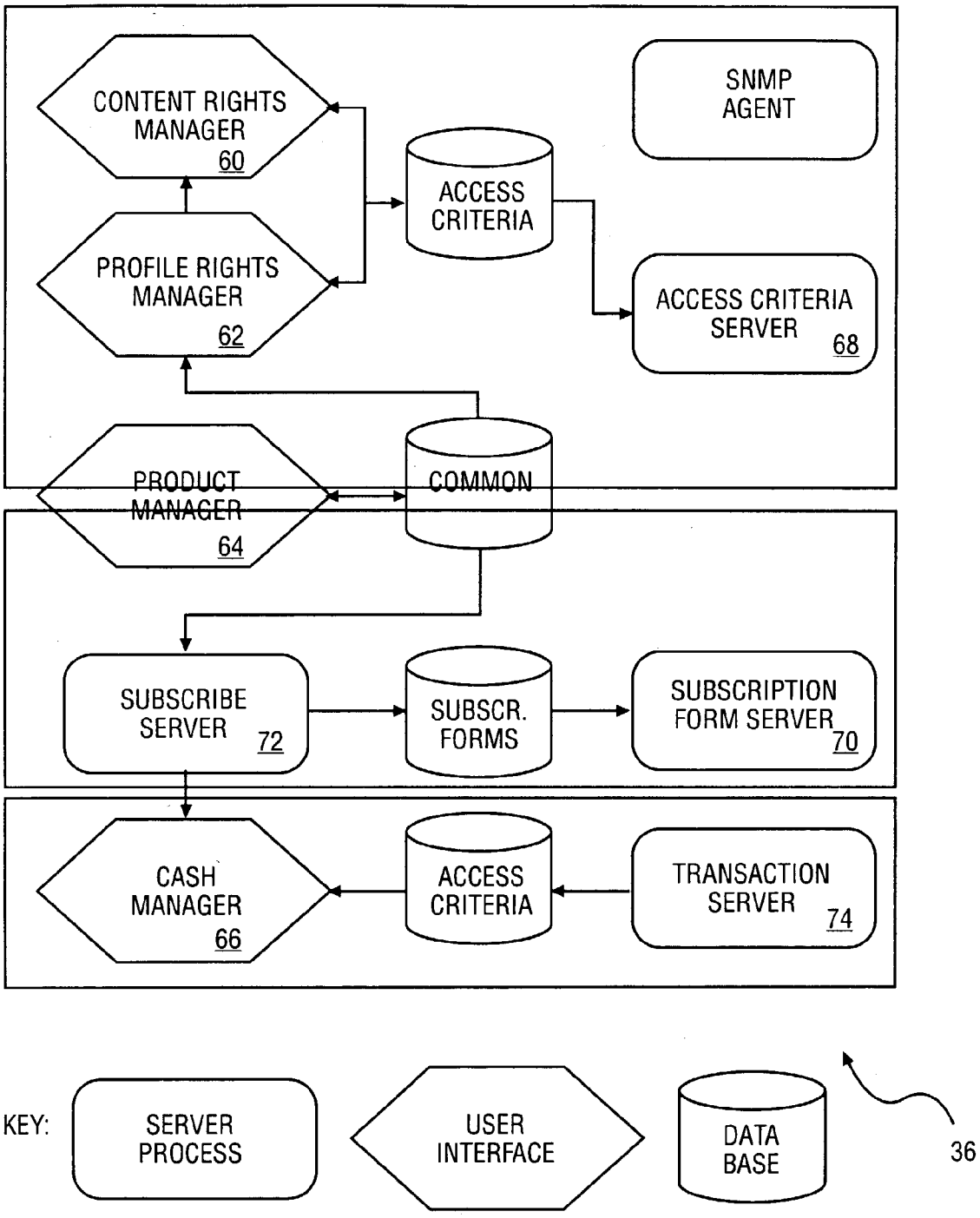
CONTENT RIGHTS MANAGER 60
PROFILE RIGHTS MANAGER 62
ACCESS CRITERIA
SNMP AGENT
ACCESS CRITERIA SERVER 68
PRODUCT MANAGER 64
COMMON
SUBSCRIBE SERVER 72
SUBSCR. FORMS
SUBSCRIPTION FORM SERVER 70
CASH MANAGER 66
ACCESS CRITERIA
TRANSACTION SERVER 74
KEY:
SERVER PROCESS
USER INTERFACE
DATA BASE
36

FIG. 4

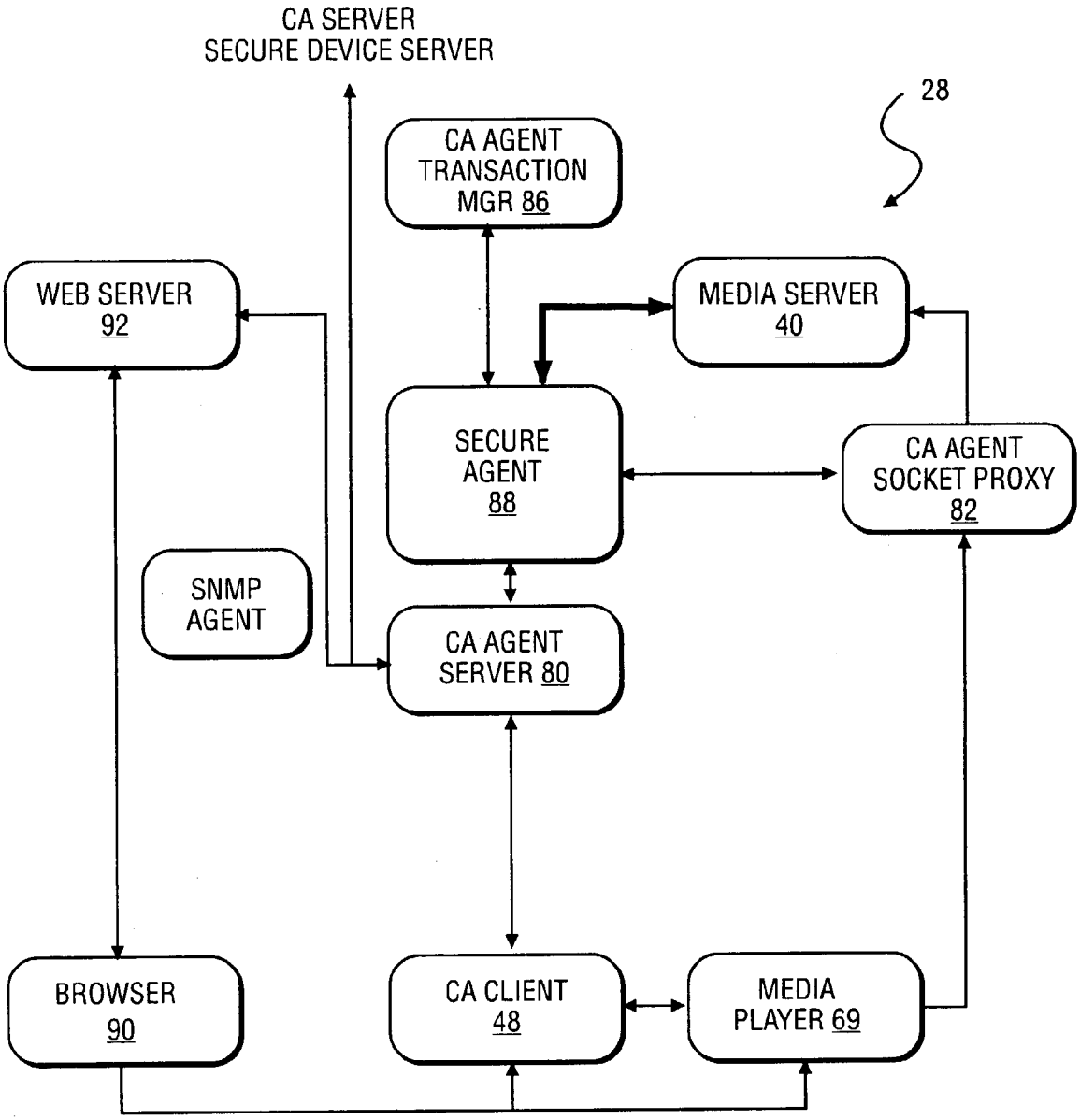
CA SERVER
SECURE DEVICE SERVER
28
CA AGENT TRANSACTION MGR 86
WEB SERVER 92
MEDIA SERVER 40
SECURE AGENT 88
CA AGENT SOCKET PROXY 82
SNMP AGENT
CA AGENT SERVER 80
BROWSER 90
CA CLIENT 48
MEDIA PLAYER 69

FIG. 5

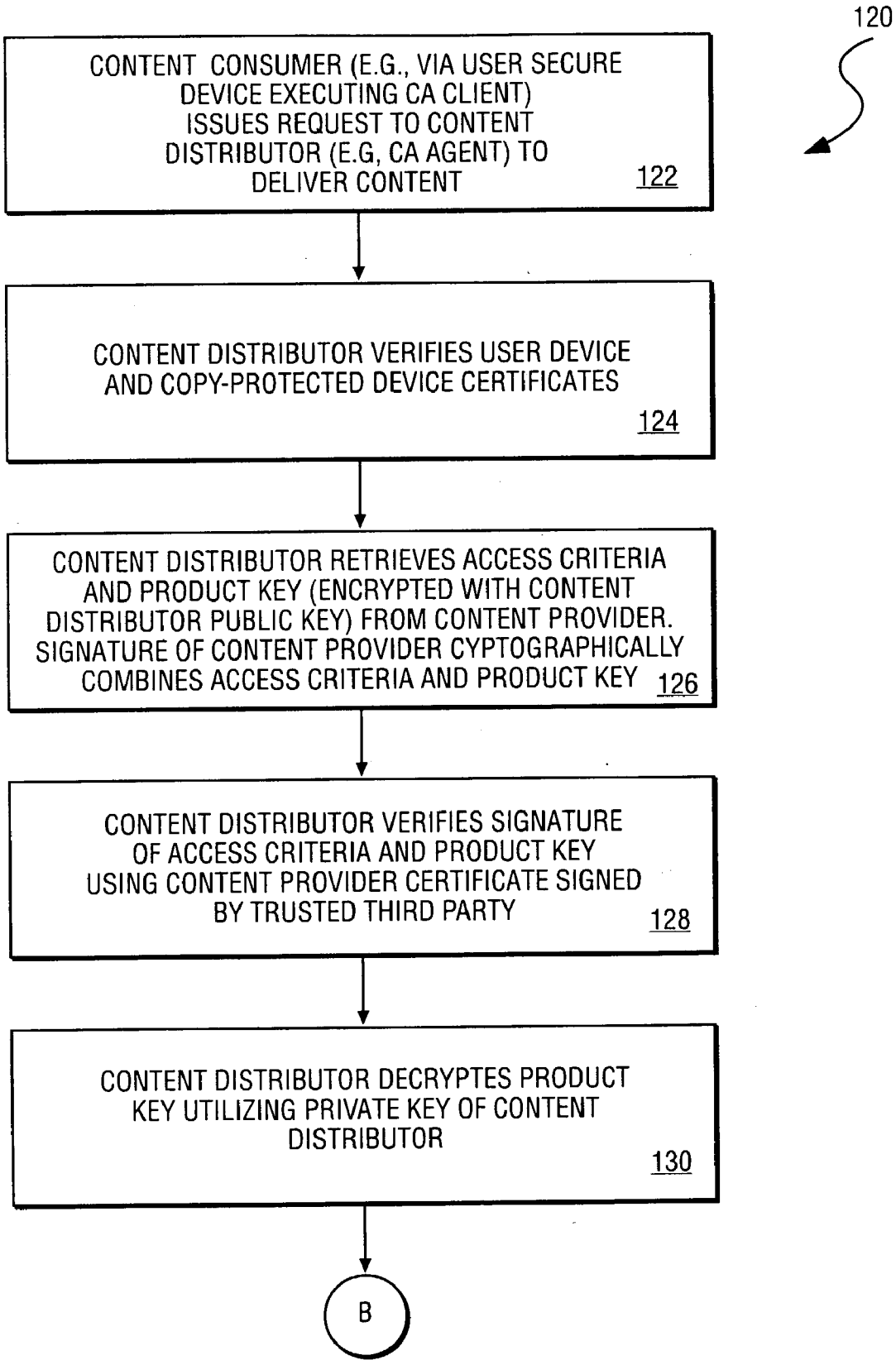
120
CONTENT CONSUMER (E.G., VIA USER SECURE DEVICE EXECUTING CA CLIENT) ISSUES REQUEST TO CONTENT DISTRIBUTOR (E.G, CA AGENT) TO DELIVER CONTENT
122
CONTENT DISTRIBUTOR VERIFIES USER DEVICE AND COPY-PROTECTED DEVICE CERTIFICATES
124
CONTENT DISTRIBUTOR RETRIEVES ACCESS CRITERIA AND PRODUCT KEY (ENCRYPTED WITH CONTENT DISTRIBUTOR PUBLIC KEY) FROM CONTENT PROVIDER. SIGNATURE OF CONTENT PROVIDER CYPTOGRAPHICALLY COMBINES ACCESS CRITERIA AND PRODUCT KEY
126
CONTENT DISTRIBUTOR VERIFIES SIGNATURE OF ACCESS CRITERIA AND PRODUCT KEY USING CONTENT PROVIDER CERTIFICATE SIGNED BY TRUSTED THIRD PARTY
128
CONTENT DISTRIBUTOR DECRYPTES PRODUCT KEY UTILIZING PRIVATE KEY OF CONTENT DISTRIBUTOR
130
B

FIG. 6A

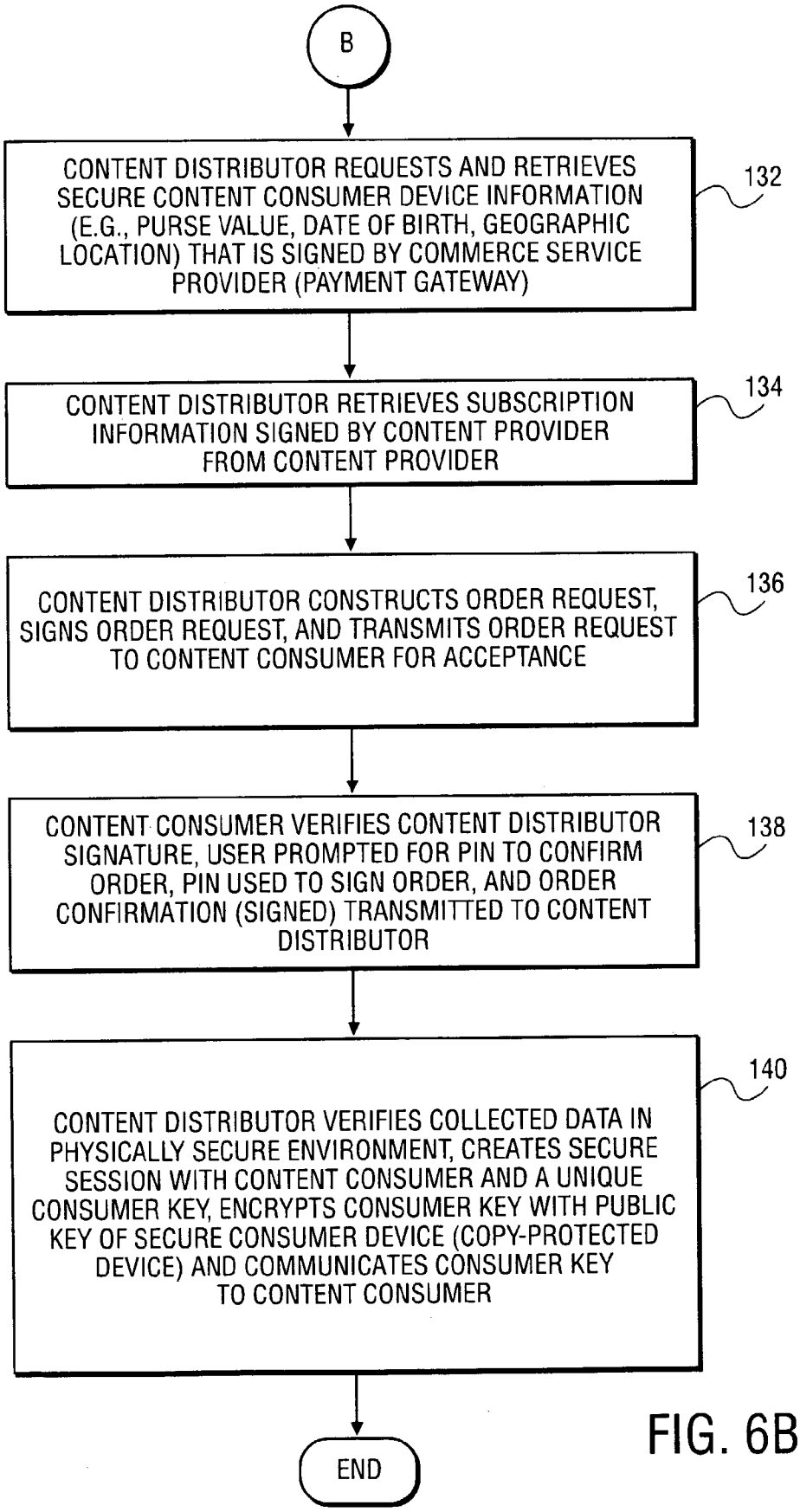
B
CONTENT DISTRIBUTOR REQUESTS AND RETRIEVES SECURE CONTENT CONSUMER DEVICE INFORMATION (E.G., PURSE VALUE, DATE OF BIRTH, GEOGRAPHIC LOCATION) THAT IS SIGNED BY COMMERCE SERVICE PROVIDER (PAYMENT GATEWAY)
132
CONTENT DISTRIBUTOR RETRIEVES SUBSCRIPTION INFORMATION SIGNED BY CONTENT PROVIDER FROM CONTENT PROVIDER
134
CONTENT DISTRIBUTOR CONSTRUCTS ORDER REQUEST, SIGNS ORDER REQUEST, AND TRANSMITS ORDER REQUEST TO CONTENT CONSUMER FOR ACCEPTANCE
136
CONTENT CONSUMER VERIFIES CONTENT DISTRIBUTOR SIGNATURE, USER PROMPTED FOR PIN TO CONFIRM ORDER, PIN USED TO SIGN ORDER, AND ORDER CONFIRMATION (SIGNED) TRANSMITTED TO CONTENT DISTRIBUTOR
138
CONTENT DISTRIBUTOR VERIFIES COLLECTED DATA IN PHYSICALLY SECURE ENVIRONMENT, CREATES SECURE SESSION WITH CONTENT CONSUMER AND A UNIQUE CONSUMER KEY, ENCRYPTS CONSUMER KEY WITH PUBLIC KEY OF SECURE CONSUMER DEVICE (COPY-PROTECTED DEVICE) AND COMMUNICATES CONSUMER KEY TO CONTENT CONSUMER
140
END

FIG. 6B

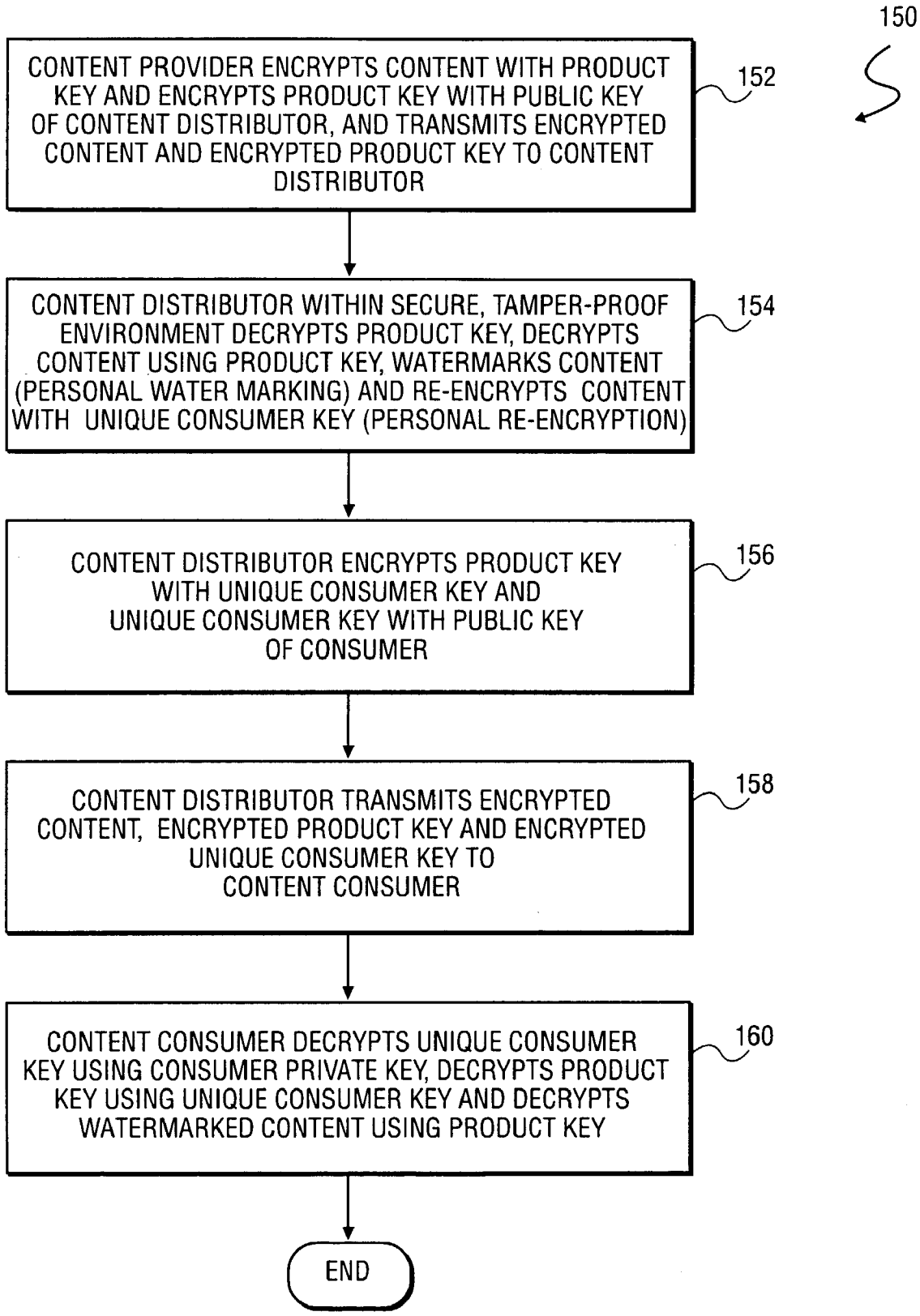
150
CONTENT PROVIDER ENCRYPTS CONTENT WITH PRODUCT KEY AND ENCRYPTS PRODUCT KEY WITH PUBLIC KEY OF CONTENT DISTRIBUTOR, AND TRANSMITS ENCRYPTED CONTENT AND ENCRYPTED PRODUCT KEY TO CONTENT DISTRIBUTOR
152
CONTENT DISTRIBUTOR WITHIN SECURE, TAMPER-PROOF ENVIRONMENT DECRYPTS PRODUCT KEY, DECRYPTS CONTENT USING PRODUCT KEY, WATERMARKS CONTENT (PERSONAL WATER MARKING) AND RE-ENCRYPTS CONTENT WITH UNIQUE CONSUMER KEY (PERSONAL RE-ENCRYPTION)
154
CONTENT DISTRIBUTOR ENCRYPTS PRODUCT KEY WITH UNIQUE CONSUMER KEY AND UNIQUE CONSUMER KEY WITH PUBLIC KEY OF CONSUMER
156
CONTENT DISTRIBUTOR TRANSMITS ENCRYPTED CONTENT, ENCRYPTED PRODUCT KEY AND ENCRYPTED UNIQUE CONSUMER KEY TO CONTENT CONSUMER
158
CONTENT CONSUMER DECRYPTS UNIQUE CONSUMER KEY USING CONSUMER PRIVATE KEY, DECRYPTS PRODUCT KEY USING UNIQUE CONSUMER KEY AND DECRYPTS WATERMARKED CONTENT USING PRODUCT KEY
160
END

FIG. 7

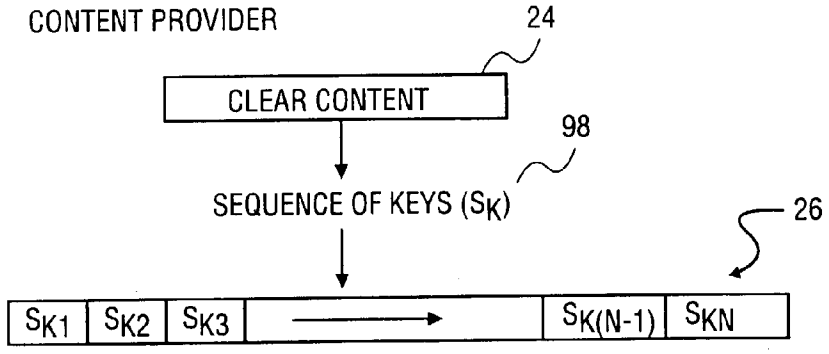
CONTENT PROVIDER
24
CLEAR CONTENT
98
SEQUENCE OF KEYS (S_K)
26
S_{K1}
S_{K2}
S_{K3}
$S_{K(N-1)}$
S_{KN}

FIG. 8A

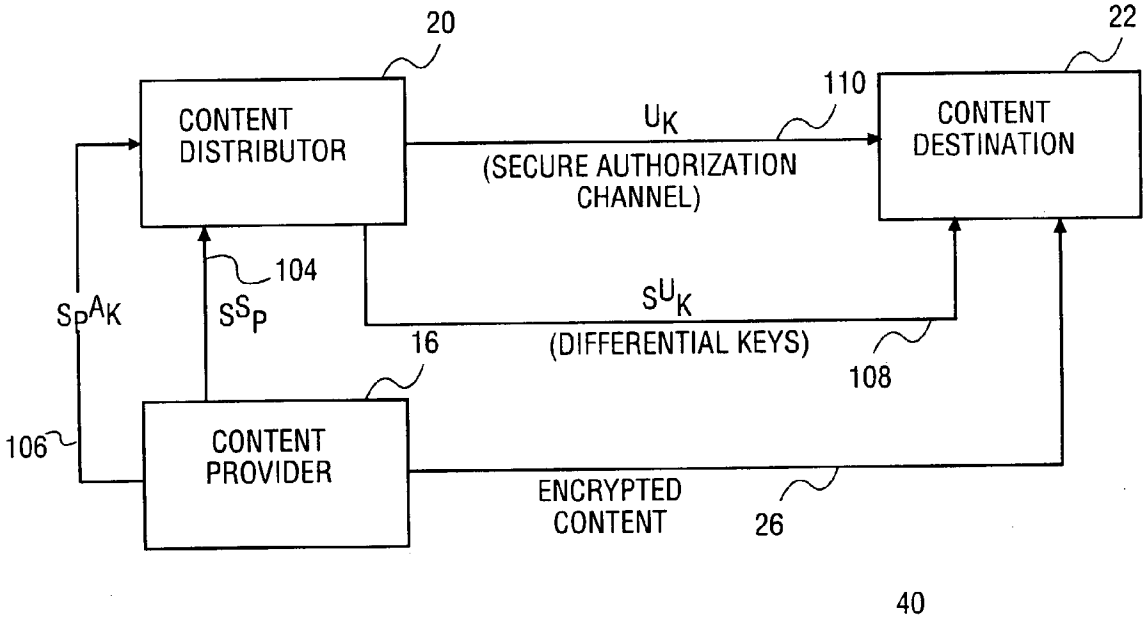
20
22
CONTENT DISTRIBUTOR
110
U_K
(SECURE AUTHORIZATION CHANNEL)
CONTENT DESTINATION
104
$S_P A_K$
S^S_P
S^U_K
(DIFFERENTIAL KEYS)
16
108
106
CONTENT PROVIDER
ENCRYPTED CONTENT
26
40

FIG. 8B

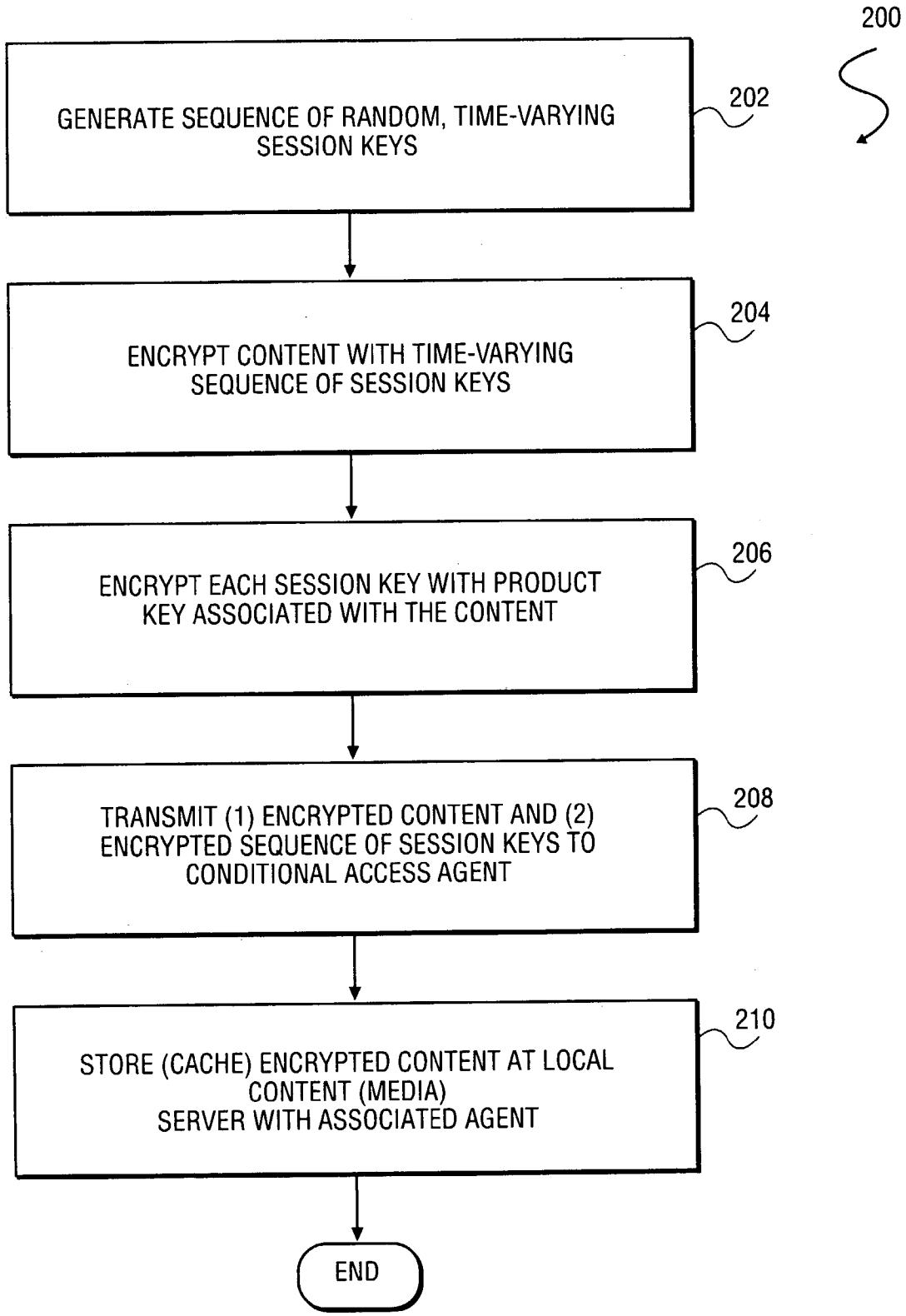
200
GENERATE SEQUENCE OF RANDOM, TIME-VARYING SESSION KEYS
202
ENCRYPT CONTENT WITH TIME-VARYING SEQUENCE OF SESSION KEYS
204
ENCRYPT EACH SESSION KEY WITH PRODUCT KEY ASSOCIATED WITH THE CONTENT
206
TRANSMIT (1) ENCRYPTED CONTENT AND (2) ENCRYPTED SEQUENCE OF SESSION KEYS TO CONDITIONAL ACCESS AGENT
208
STORE (CACHE) ENCRYPTED CONTENT AT LOCAL CONTENT (MEDIA) SERVER WITH ASSOCIATED AGENT
210
END

FIG. 9

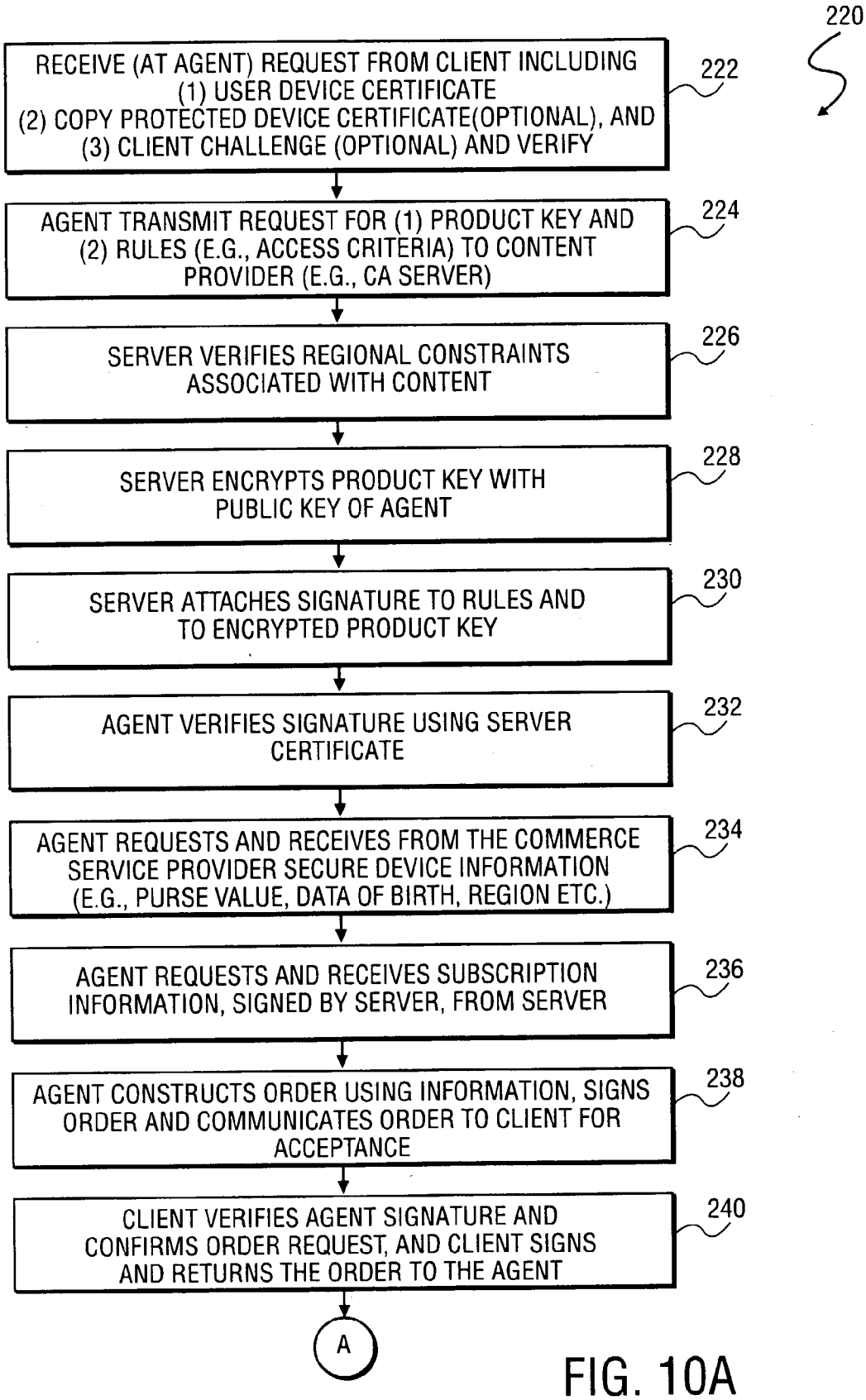
220
RECEIVE (AT AGENT) REQUEST FROM CLIENT INCLUDING (1) USER DEVICE CERTIFICATE (2) COPY PROTECTED DEVICE CERTIFICATE(OPTIONAL), AND (3) CLIENT CHALLENGE (OPTIONAL) AND VERIFY
222
AGENT TRANSMIT REQUEST FOR (1) PRODUCT KEY AND (2) RULES (E.G., ACCESS CRITERIA) TO CONTENT PROVIDER (E.G., CA SERVER)
224
SERVER VERIFIES REGIONAL CONSTRAINTS ASSOCIATED WITH CONTENT
226
SERVER ENCRYPTS PRODUCT KEY WITH PUBLIC KEY OF AGENT
228
SERVER ATTACHES SIGNATURE TO RULES AND TO ENCRYPTED PRODUCT KEY
230
AGENT VERIFIES SIGNATURE USING SERVER CERTIFICATE
232
AGENT REQUESTS AND RECEIVES FROM THE COMMERCE SERVICE PROVIDER SECURE DEVICE INFORMATION (E.G., PURSE VALUE, DATA OF BIRTH, REGION ETC.)
234
AGENT REQUESTS AND RECEIVES SUBSCRIPTION INFORMATION, SIGNED BY SERVER, FROM SERVER
236
AGENT CONSTRUCTS ORDER USING INFORMATION, SIGNS ORDER AND COMMUNICATES ORDER TO CLIENT FOR ACCEPTANCE
238
CLIENT VERIFIES AGENT SIGNATURE AND CONFIRMS ORDER REQUEST, AND CLIENT SIGNS AND RETURNS THE ORDER TO THE AGENT
240
A

FIG. 10A

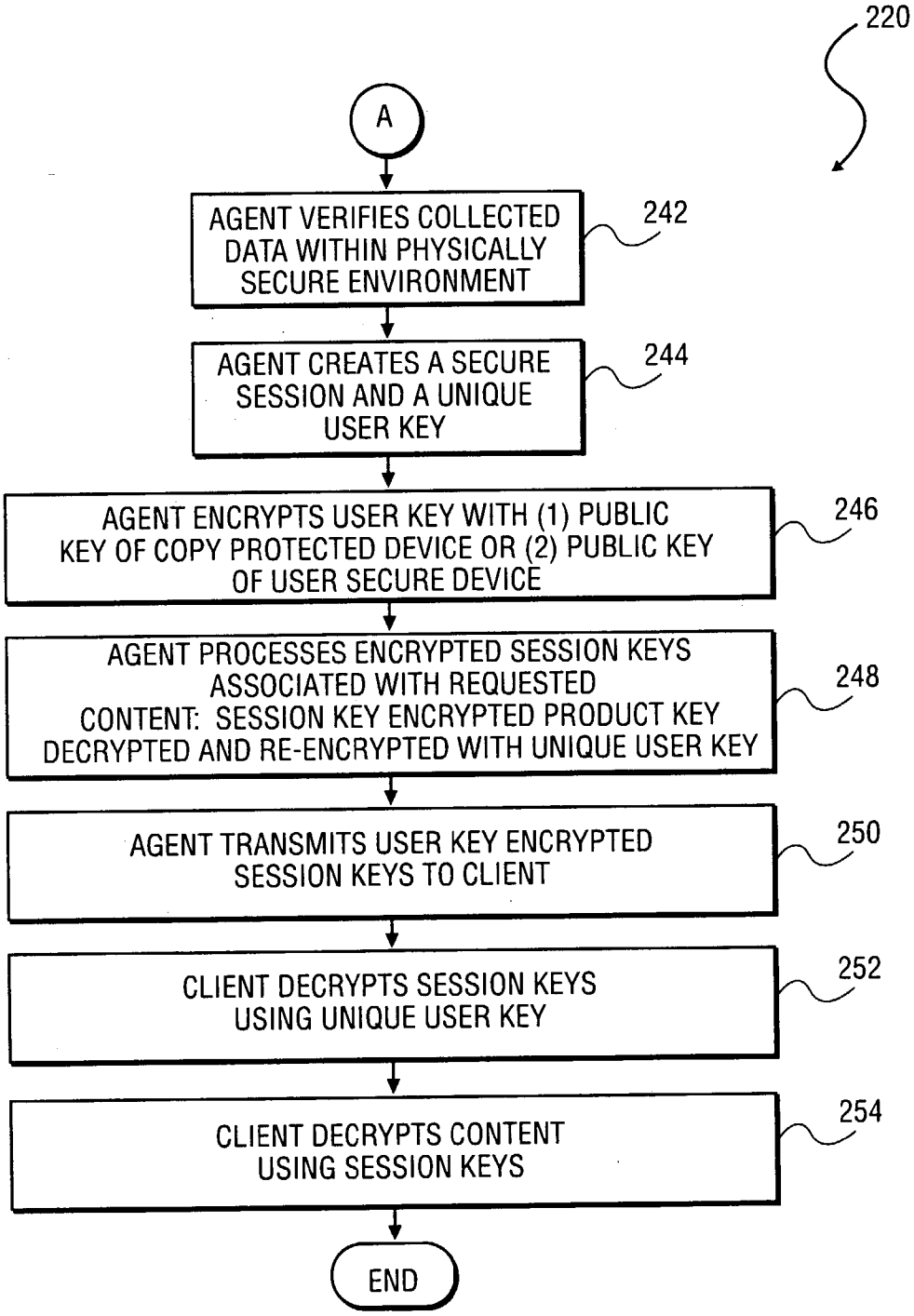
220
A
AGENT VERIFIES COLLECTED DATA WITHIN PHYSICALLY SECURE ENVIRONMENT
242
AGENT CREATES A SECURE SESSION AND A UNIQUE USER KEY
244
AGENT ENCRYPTS USER KEY WITH (1) PUBLIC KEY OF COPY PROTECTED DEVICE OR (2) PUBLIC KEY OF USER SECURE DEVICE
246
AGENT PROCESSES ENCRYPTED SESSION KEYS ASSOCIATED WITH REQUESTED CONTENT: SESSION KEY ENCRYPTED PRODUCT KEY DECRYPTED AND RE-ENCRYPTED WITH UNIQUE USER KEY
248
AGENT TRANSMITS USER KEY ENCRYPTED SESSION KEYS TO CLIENT
250
CLIENT DECRYPTS SESSION KEYS USING UNIQUE USER KEY
252
CLIENT DECRYPTS CONTENT USING SESSION KEYS
254
END

FIG. 10B

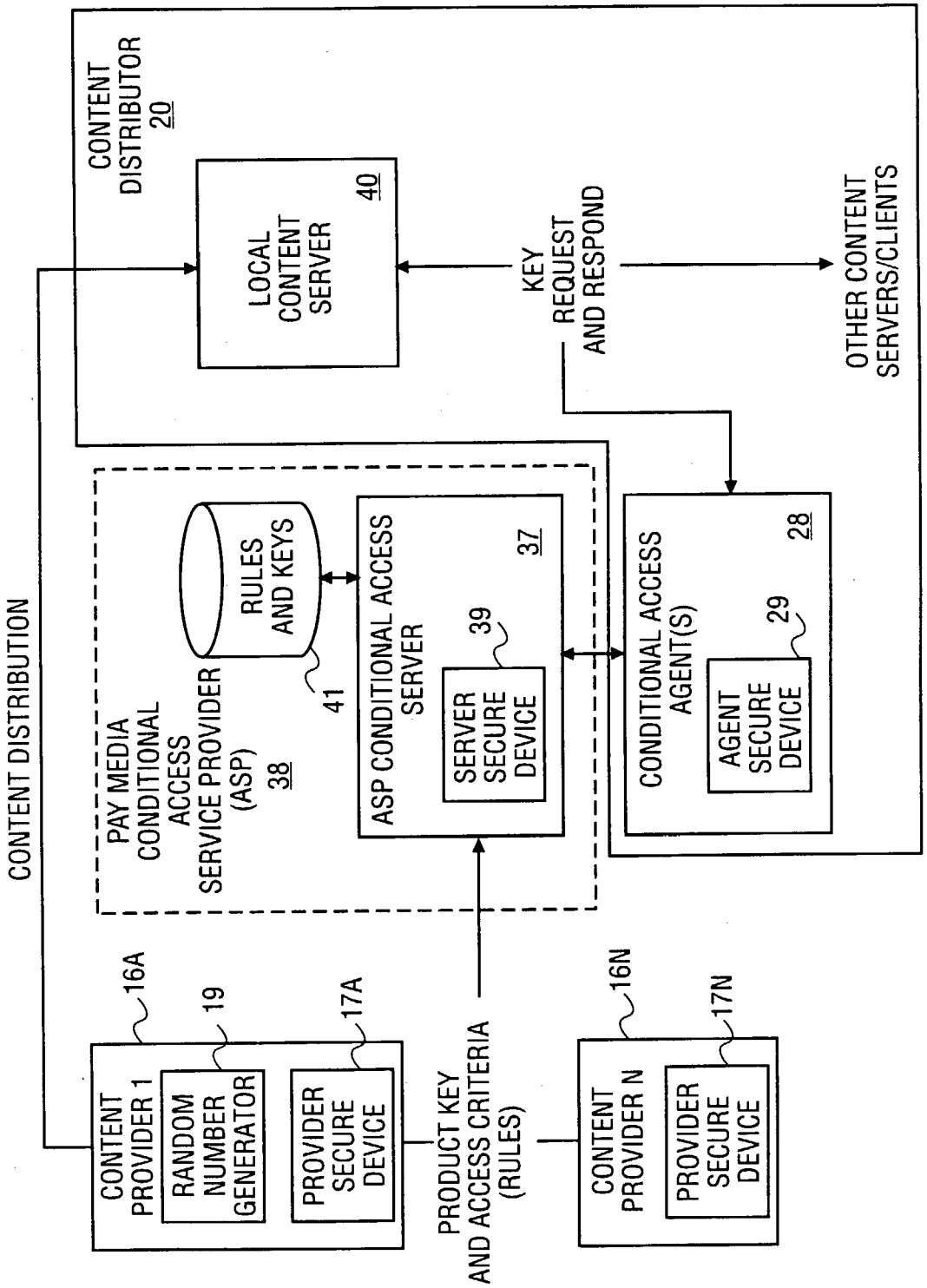
CONTENT DISTRIBUTION
CONTENT DISTRIBUTOR 20
LOCAL CONTENT SERVER
40
KEY REQUEST AND RESPOND
OTHER CONTENT SERVERS/CLIENTS
PAY MEDIA CONDITIONAL ACCESS SERVICE PROVIDER (ASP) 38
RULES AND KEYS
41
ASP CONDITIONAL ACCESS SERVER
37
SERVER SECURE DEVICE
39
CONDITIONAL ACCESS AGENT(S)
28
AGENT SECURE DEVICE
29
CONTENT PROVIDER 1
16A
RANDOM NUMBER GENERATOR
19
PROVIDER SECURE DEVICE
17A
PRODUCT KEY AND ACCESS CRITERIA (RULES)
CONTENT PROVIDER N
16N
PROVIDER SECURE DEVICE
17N

FIG. 11

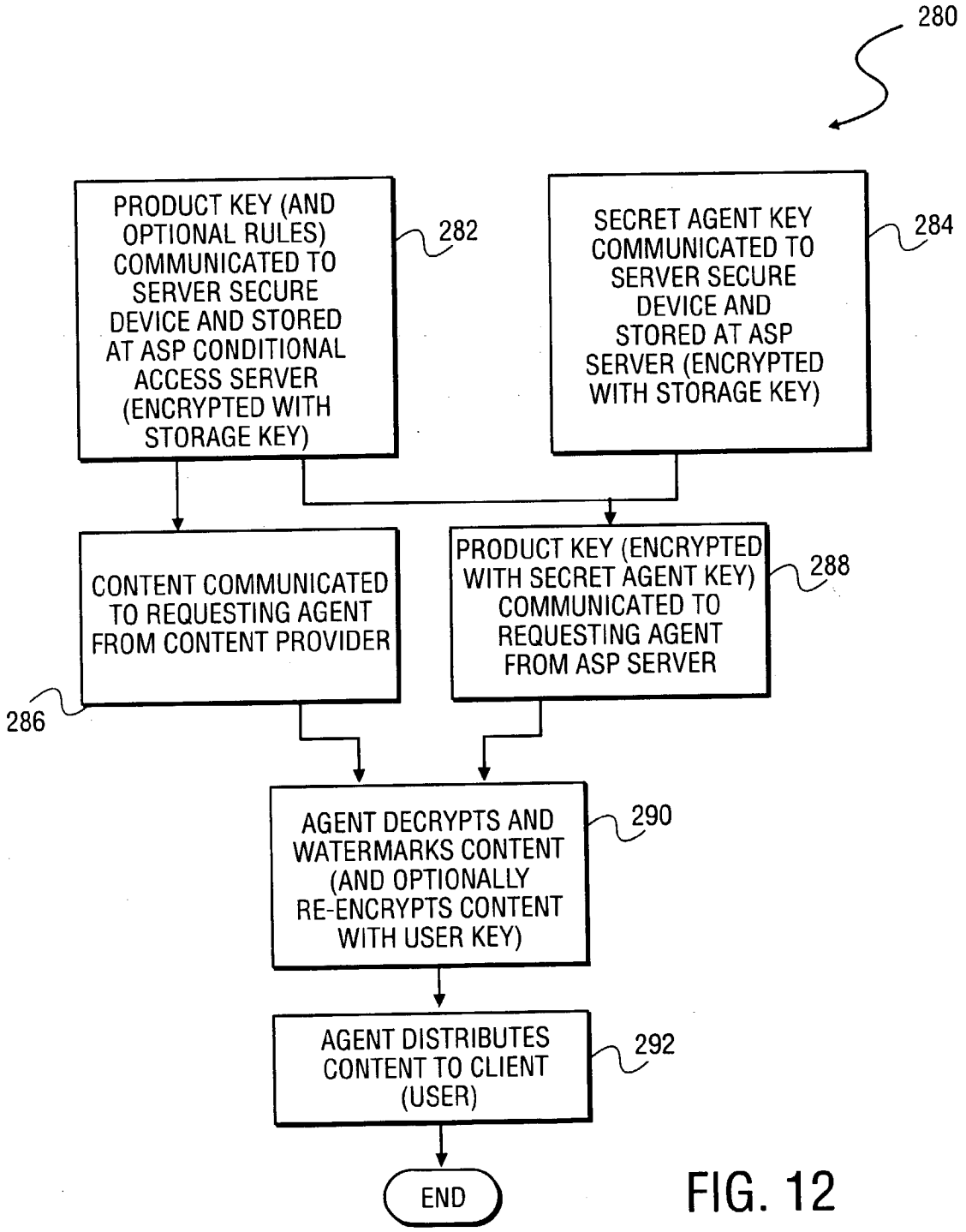
280
PRODUCT KEY (AND OPTIONAL RULES) COMMUNICATED TO SERVER SECURE DEVICE AND STORED AT ASP CONDITIONAL ACCESS SERVER (ENCRYPTED WITH STORAGE KEY)
282
SECRET AGENT KEY COMMUNICATED TO SERVER SECURE DEVICE AND STORED AT ASP SERVER (ENCRYPTED WITH STORAGE KEY)
284
CONTENT COMMUNICATED TO REQUESTING AGENT FROM CONTENT PROVIDER
286
PRODUCT KEY (ENCRYPTED WITH SECRET AGENT KEY) COMMUNICATED TO REQUESTING AGENT FROM ASP SERVER
288
AGENT DECRYPTS AND WATERMARKS CONTENT (AND OPTIONALLY RE-ENCRYPTS CONTENT WITH USER KEY)
290
AGENT DISTRIBUTES CONTENT TO CLIENT (USER)
292
END

FIG. 12

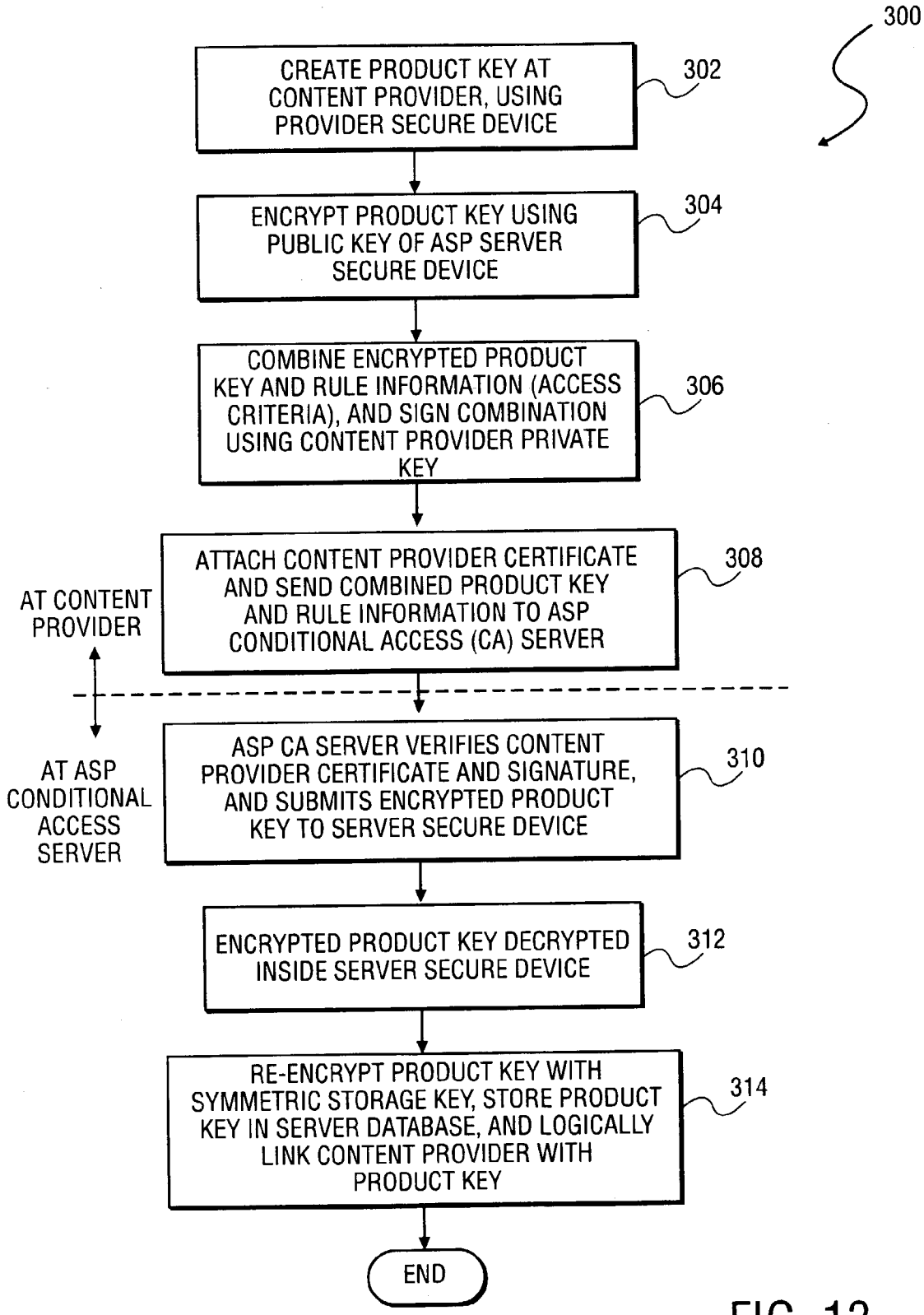
300
CREATE PRODUCT KEY AT CONTENT PROVIDER, USING PROVIDER SECURE DEVICE
302
ENCRYPT PRODUCT KEY USING PUBLIC KEY OF ASP SERVER SECURE DEVICE
304
COMBINE ENCRYPTED PRODUCT KEY AND RULE INFORMATION (ACCESS CRITERIA), AND SIGN COMBINATION USING CONTENT PROVIDER PRIVATE KEY
306
AT CONTENT PROVIDER
ATTACH CONTENT PROVIDER CERTIFICATE AND SEND COMBINED PRODUCT KEY AND RULE INFORMATION TO ASP CONDITIONAL ACCESS (CA) SERVER
308
AT ASP CONDITIONAL ACCESS SERVER
ASP CA SERVER VERIFIES CONTENT PROVIDER CERTIFICATE AND SIGNATURE, AND SUBMITS ENCRYPTED PRODUCT KEY TO SERVER SECURE DEVICE
310
ENCRYPTED PRODUCT KEY DECRYPTED INSIDE SERVER SECURE DEVICE
312
RE-ENCRYPT PRODUCT KEY WITH SYMMETRIC STORAGE KEY, STORE PRODUCT KEY IN SERVER DATABASE, AND LOGICALLY LINK CONTENT PROVIDER WITH PRODUCT KEY
314
END

FIG. 13

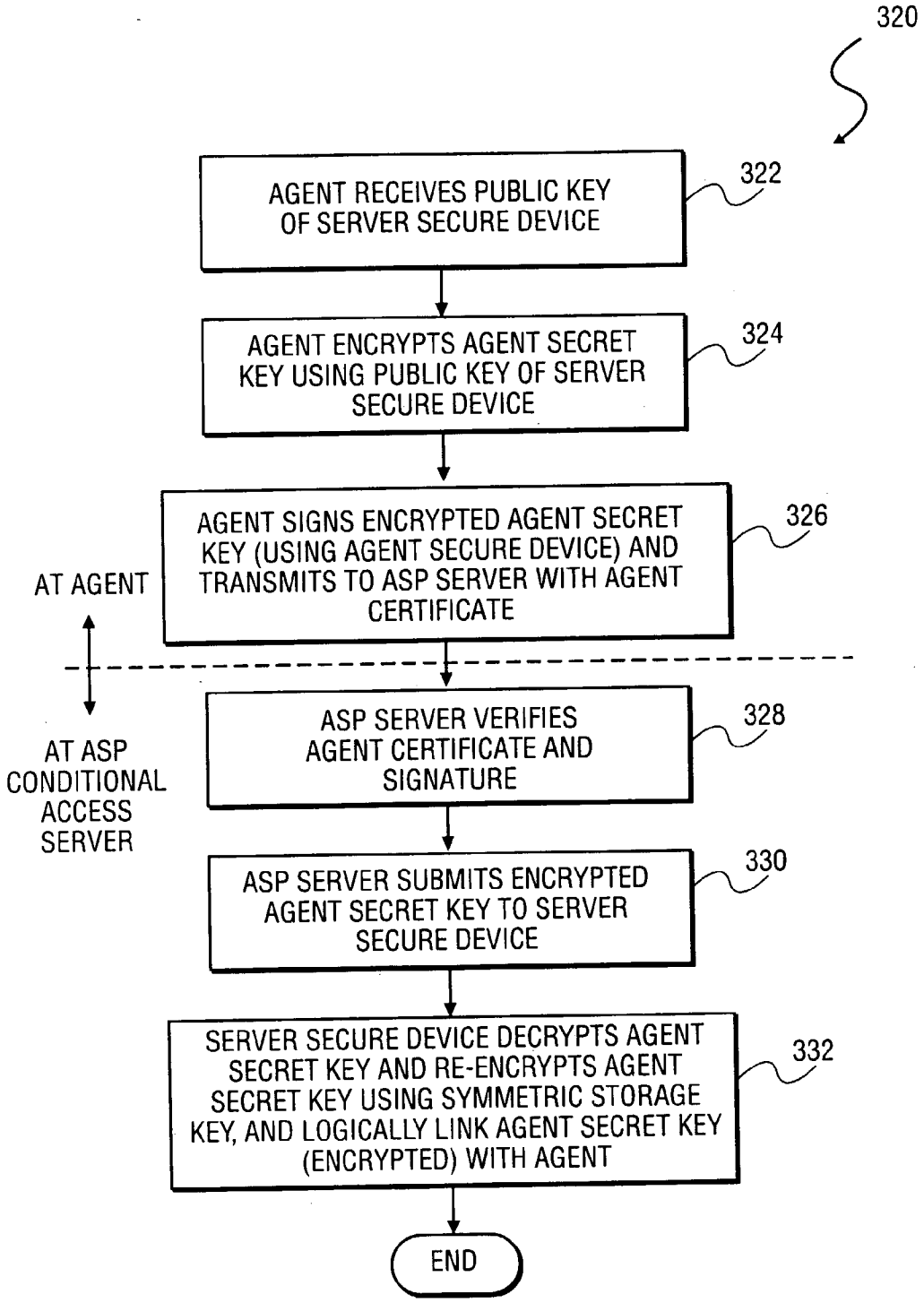
320
AGENT RECEIVES PUBLIC KEY OF SERVER SECURE DEVICE
322
AGENT ENCRYPTS AGENT SECRET KEY USING PUBLIC KEY OF SERVER SECURE DEVICE
324
AGENT SIGNS ENCRYPTED AGENT SECRET KEY (USING AGENT SECURE DEVICE) AND TRANSMITS TO ASP SERVER WITH AGENT CERTIFICATE
326
AT AGENT
AT ASP CONDITIONAL ACCESS SERVER
ASP SERVER VERIFIES AGENT CERTIFICATE AND SIGNATURE
328
ASP SERVER SUBMITS ENCRYPTED AGENT SECRET KEY TO SERVER SECURE DEVICE
330
SERVER SECURE DEVICE DECRYPTS AGENT SECRET KEY AND RE-ENCRYPTS AGENT SECRET KEY USING SYMMETRIC STORAGE KEY, AND LOGICALLY LINK AGENT SECRET KEY (ENCRYPTED) WITH AGENT
332
END

FIG. 14

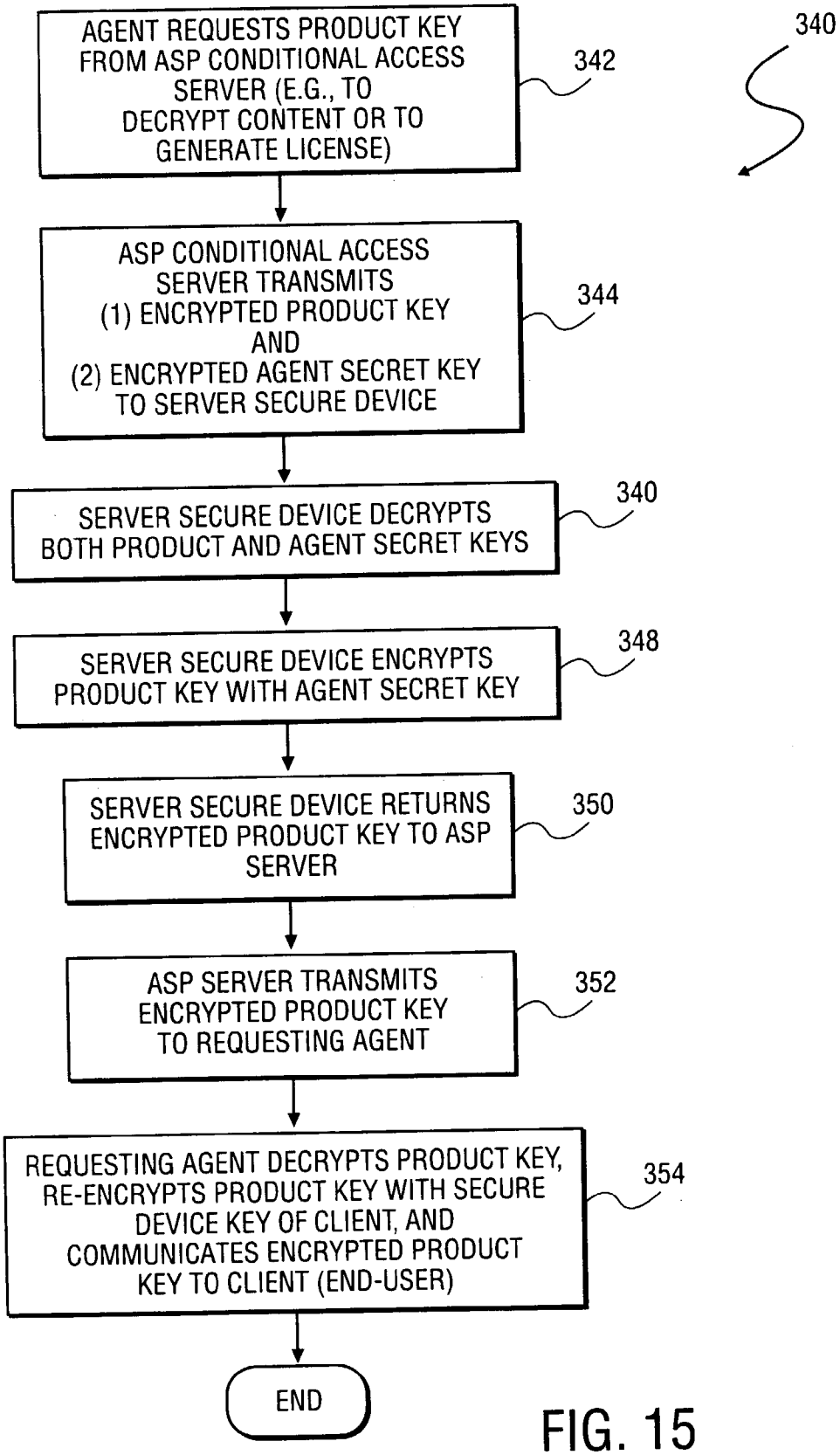
340
AGENT REQUESTS PRODUCT KEY FROM ASP CONDITIONAL ACCESS SERVER (E.G., TO DECRYPT CONTENT OR TO GENERATE LICENSE)
342
ASP CONDITIONAL ACCESS SERVER TRANSMITS (1) ENCRYPTED PRODUCT KEY AND (2) ENCRYPTED AGENT SECRET KEY TO SERVER SECURE DEVICE
344
SERVER SECURE DEVICE DECRYPTS BOTH PRODUCT AND AGENT SECRET KEYS
340
SERVER SECURE DEVICE ENCRYPTS PRODUCT KEY WITH AGENT SECRET KEY
348
SERVER SECURE DEVICE RETURNS ENCRYPTED PRODUCT KEY TO ASP SERVER
350
ASP SERVER TRANSMITS ENCRYPTED PRODUCT KEY TO REQUESTING AGENT
352
REQUESTING AGENT DECRYPTS PRODUCT KEY, RE-ENCRYPTS PRODUCT KEY WITH SECURE DEVICE KEY OF CLIENT, AND COMMUNICATES ENCRYPTED PRODUCT KEY TO CLIENT (END-USER)
354
END

FIG. 15

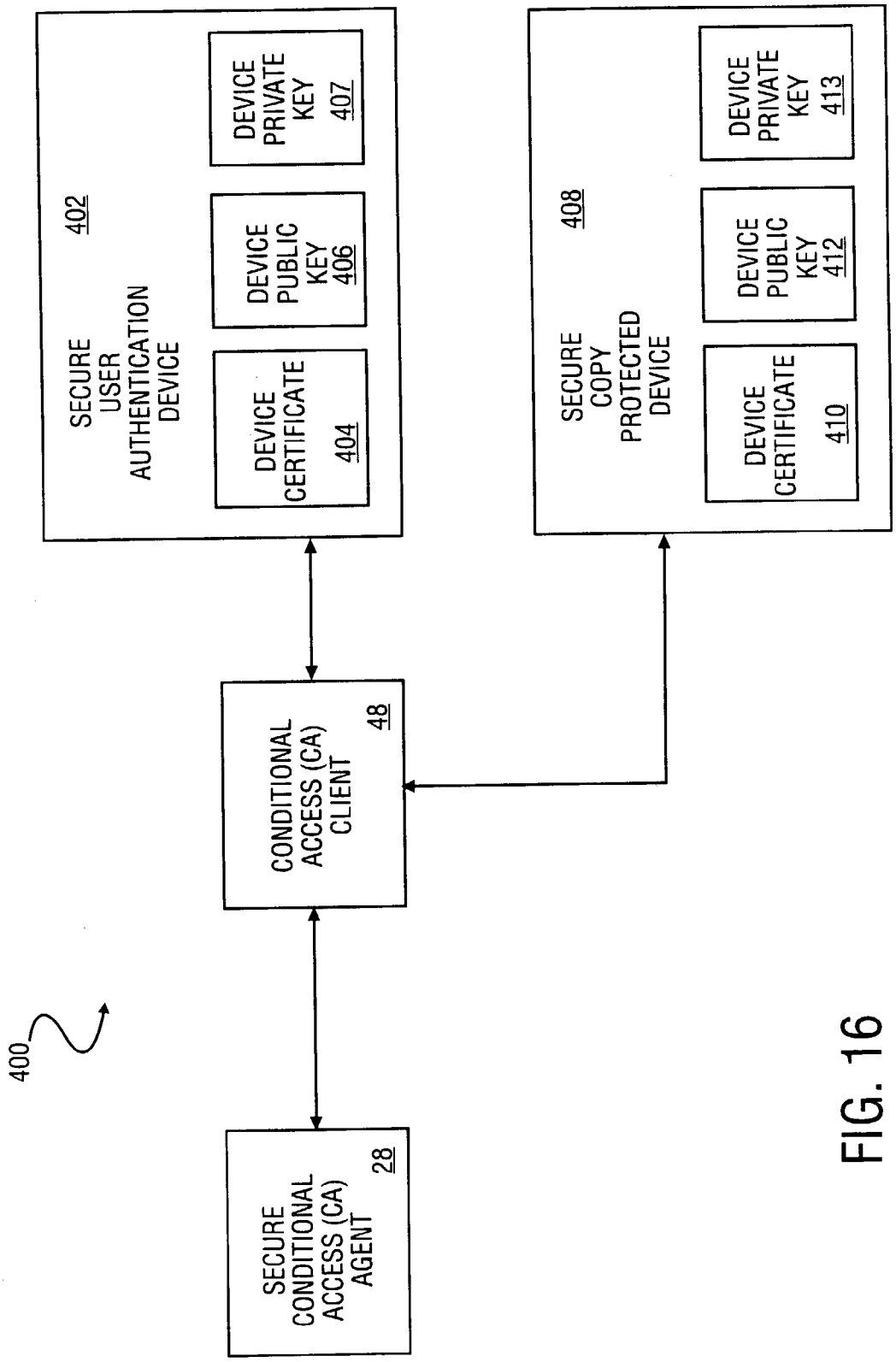
400
SECURE CONDITIONAL ACCESS (CA) AGENT 28
CONDITIONAL ACCESS (CA) CLIENT 48
SECURE USER AUTHENTICATION DEVICE 402
DEVICE CERTIFICATE 404
DEVICE PUBLIC KEY 406
DEVICE PRIVATE KEY 407
SECURE COPY PROTECTED DEVICE 408
DEVICE CERTIFICATE 410
DEVICE PUBLIC KEY 412
DEVICE PRIVATE KEY 413

FIG. 16

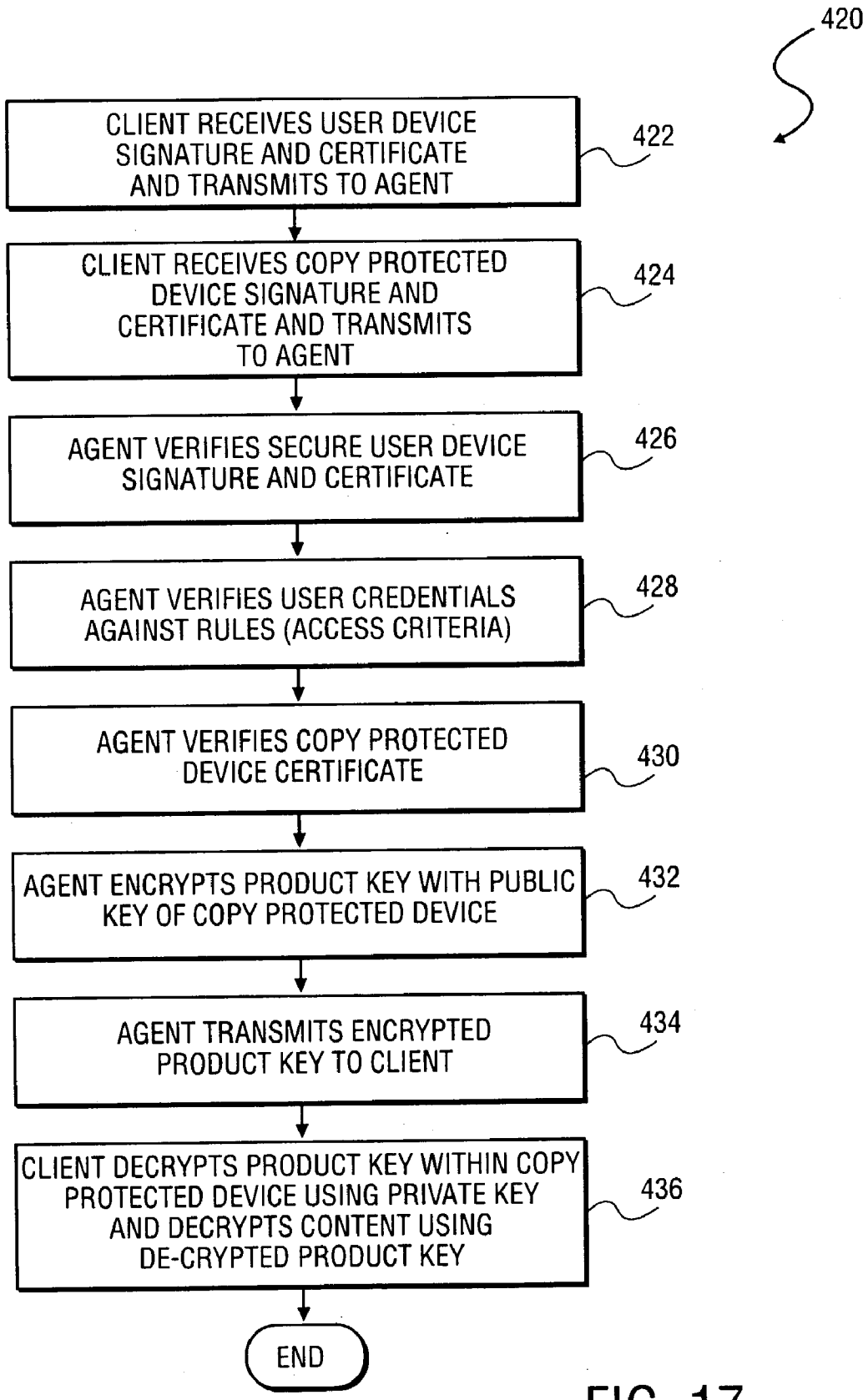
420
CLIENT RECEIVES USER DEVICE SIGNATURE AND CERTIFICATE AND TRANSMITS TO AGENT
422
CLIENT RECEIVES COPY PROTECTED DEVICE SIGNATURE AND CERTIFICATE AND TRANSMITS TO AGENT
424
AGENT VERIFIES SECURE USER DEVICE SIGNATURE AND CERTIFICATE
426
AGENT VERIFIES USER CREDENTIALS AGAINST RULES (ACCESS CRITERIA)
428
AGENT VERIFIES COPY PROTECTED DEVICE CERTIFICATE
430
AGENT ENCRYPTS PRODUCT KEY WITH PUBLIC KEY OF COPY PROTECTED DEVICE
432
AGENT TRANSMITS ENCRYPTED PRODUCT KEY TO CLIENT
434
CLIENT DECRYPTS PRODUCT KEY WITHIN COPY PROTECTED DEVICE USING PRIVATE KEY AND DECRYPTS CONTENT USING DE-CRYPTED PRODUCT KEY
436
END

FIG. 17

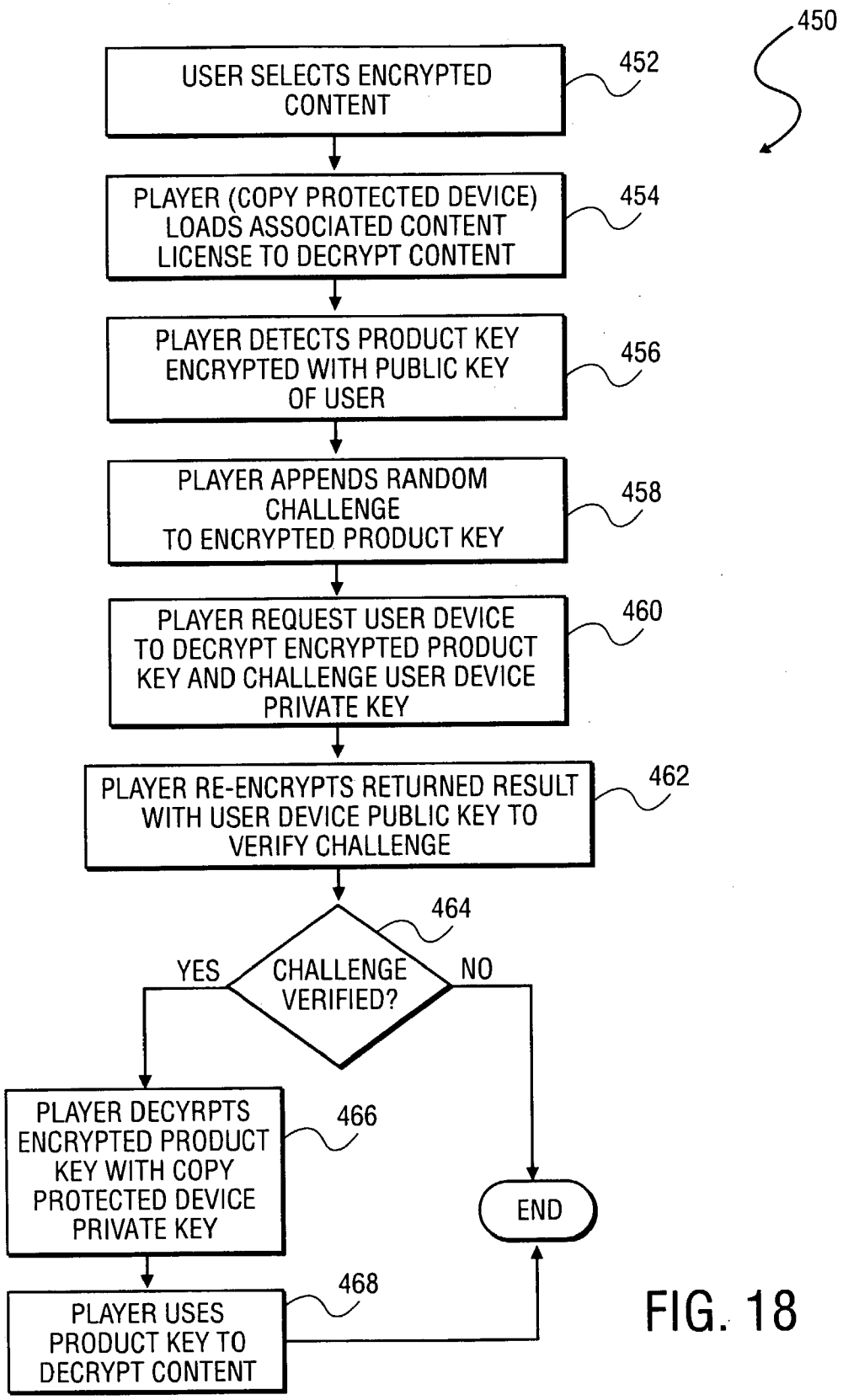
450
USER SELECTS ENCRYPTED CONTENT
452
PLAYER (COPY PROTECTED DEVICE) LOADS ASSOCIATED CONTENT LICENSE TO DECRYPT CONTENT
454
PLAYER DETECTS PRODUCT KEY ENCRYPTED WITH PUBLIC KEY OF USER
456
PLAYER APPENDS RANDOM CHALLENGE TO ENCRYPTED PRODUCT KEY
458
PLAYER REQUEST USER DEVICE TO DECRYPT ENCRYPTED PRODUCT KEY AND CHALLENGE USER DEVICE PRIVATE KEY
460
PLAYER RE-ENCRYPTS RETURNED RESULT WITH USER DEVICE PUBLIC KEY TO VERIFY CHALLENGE
462
CHALLENGE VERIFIED?
464
YES
NO
PLAYER DECYRPTS ENCRYPTED PRODUCT KEY WITH COPY PROTECTED DEVICE PRIVATE KEY
466
END
PLAYER USES PRODUCT KEY TO DECRYPT CONTENT
468

FIG. 18

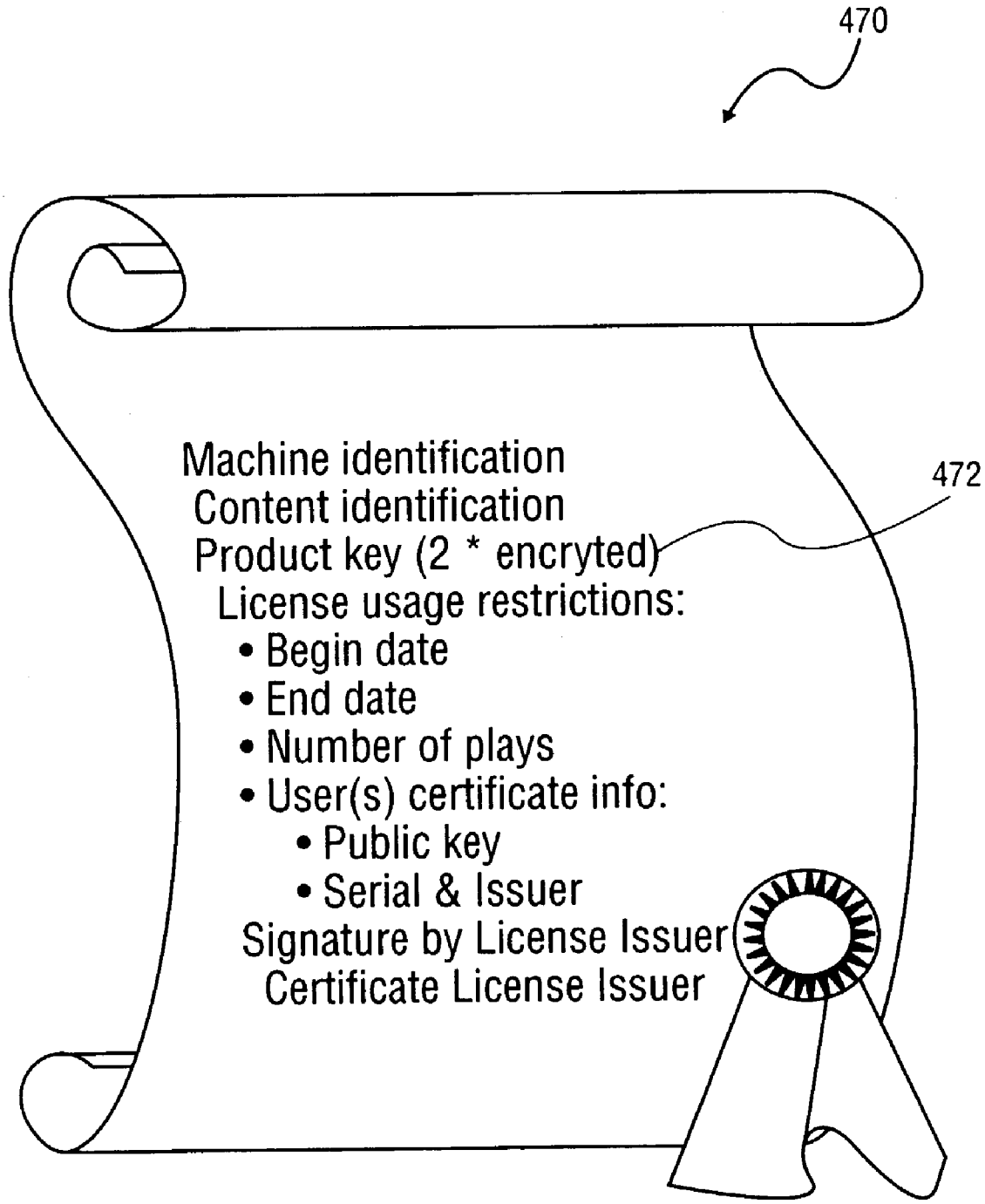
470
472
Machine identification
Content identification
Product key (2 * encryted)
License usage restrictions:
• Begin date
• End date
• Number of plays
• User(s) certificate info:
• Public key
• Serial & Issuer
Signature by License Issuer
Certificate License Issuer

FIG. 19

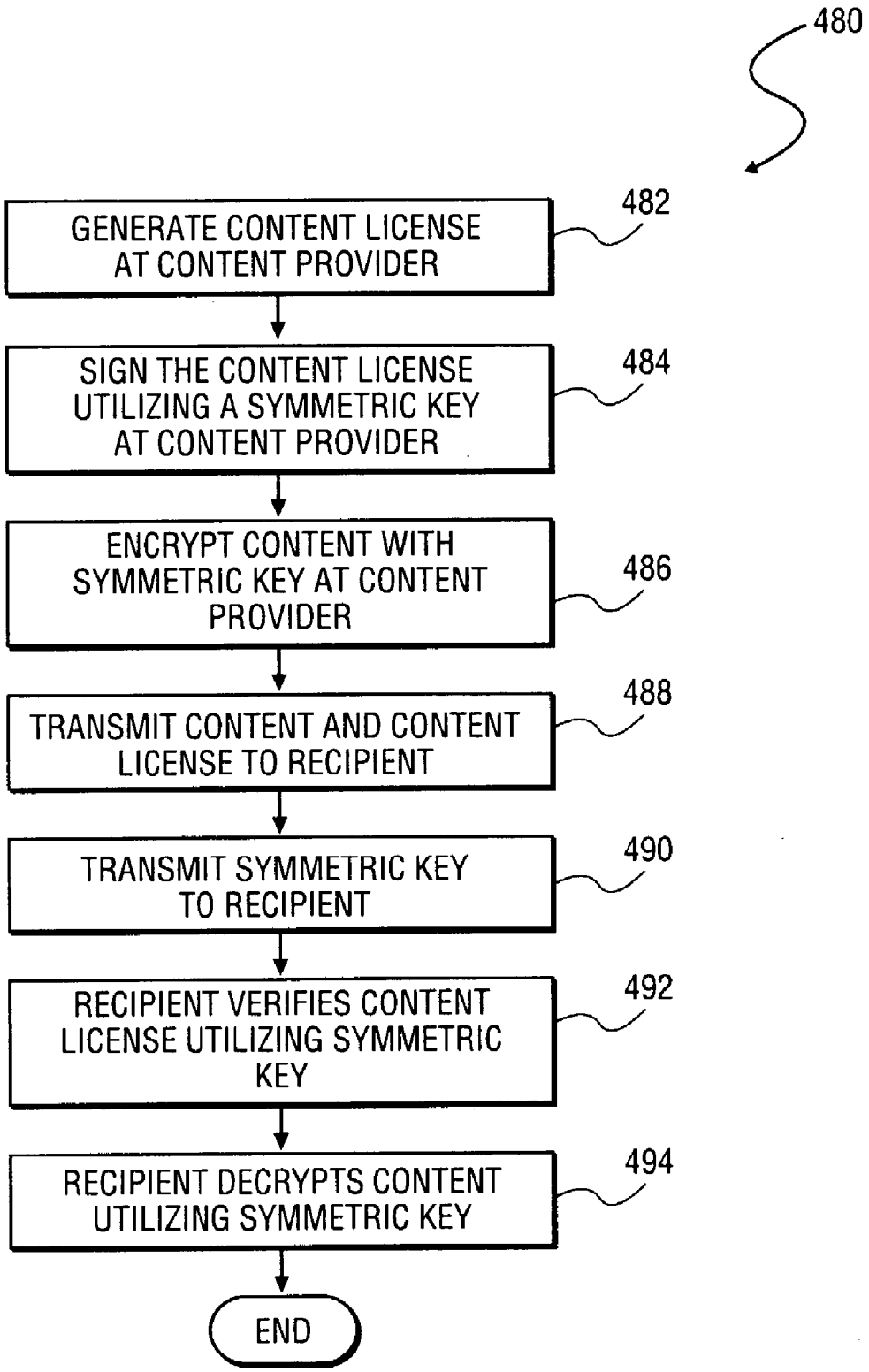
480
GENERATE CONTENT LICENSE AT CONTENT PROVIDER
482
SIGN THE CONTENT LICENSE UTILIZING A SYMMETRIC KEY AT CONTENT PROVIDER
484
ENCRYPT CONTENT WITH SYMMETRIC KEY AT CONTENT PROVIDER
486
TRANSMIT CONTENT AND CONTENT LICENSE TO RECIPIENT
488
TRANSMIT SYMMETRIC KEY TO RECIPIENT
490
RECIPIENT VERIFIES CONTENT LICENSE UTILIZING SYMMETRIC KEY
492
RECIPIENT DECRYPTS CONTENT UTILIZING SYMMETRIC KEY
494
END

FIG. 20

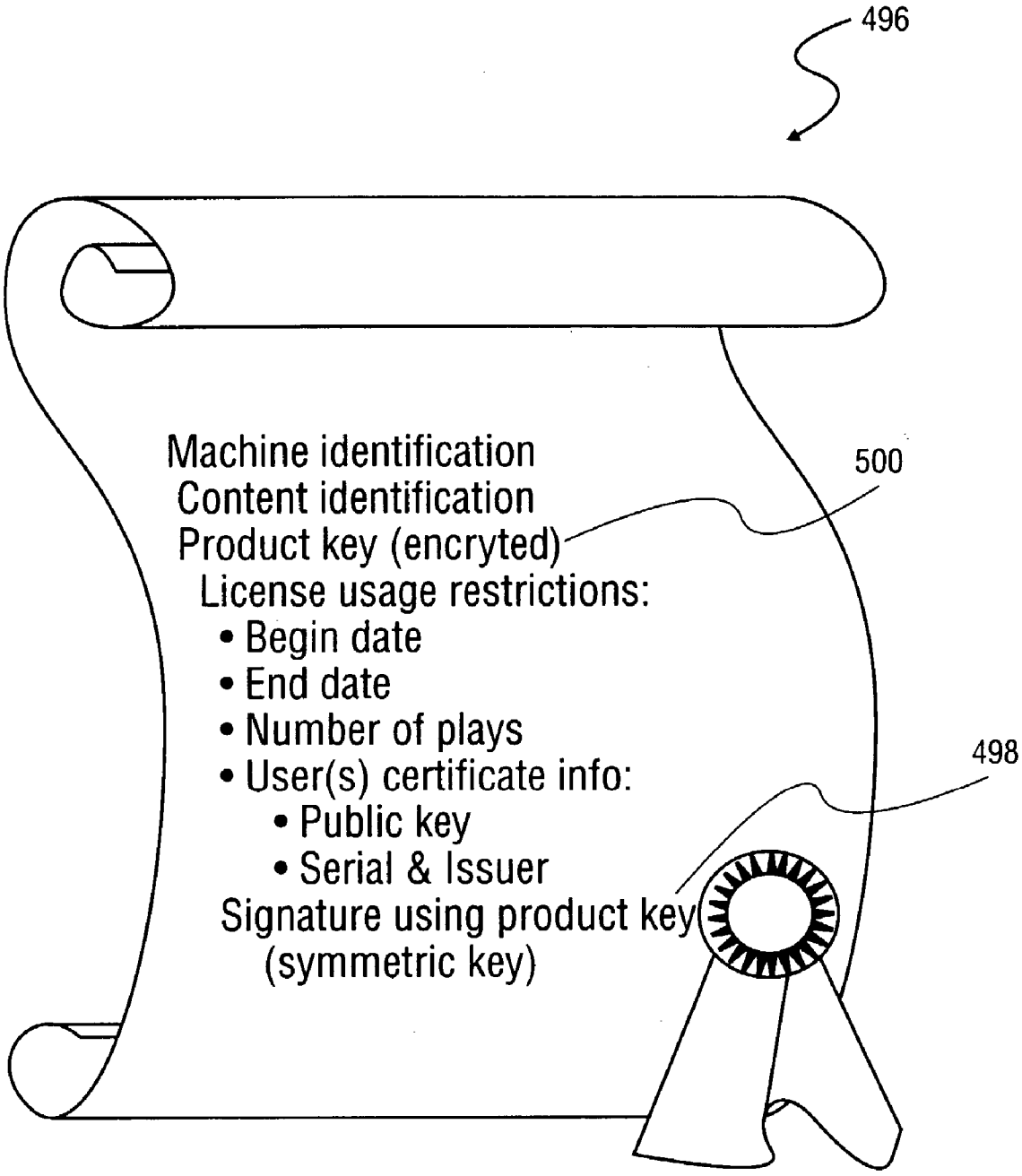
496
Machine identification
Content identification
Product key (encryted)
License usage restrictions:
• Begin date
• End date
• Number of plays
• User(s) certificate info:
• Public key
• Serial & Issuer
Signature using product key
(symmetric key)
500
498

FIG. 21

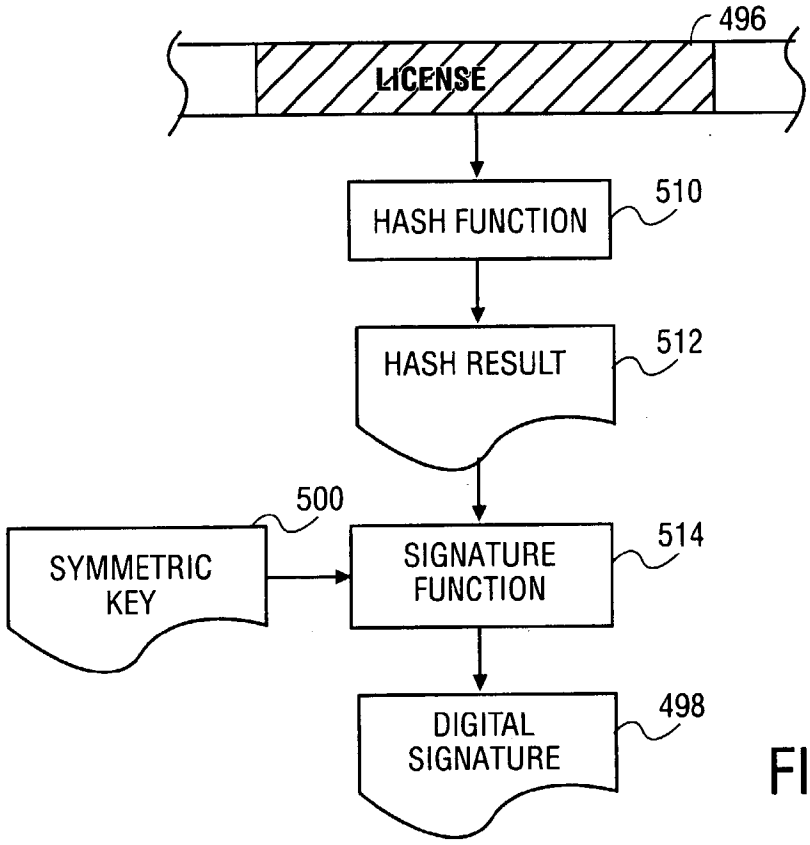
496
LICENSE
HASH FUNCTION
510
HASH RESULT
512
500
SYMMETRIC KEY
SIGNATURE FUNCTION
514
DIGITAL SIGNATURE
498

FIG. 22

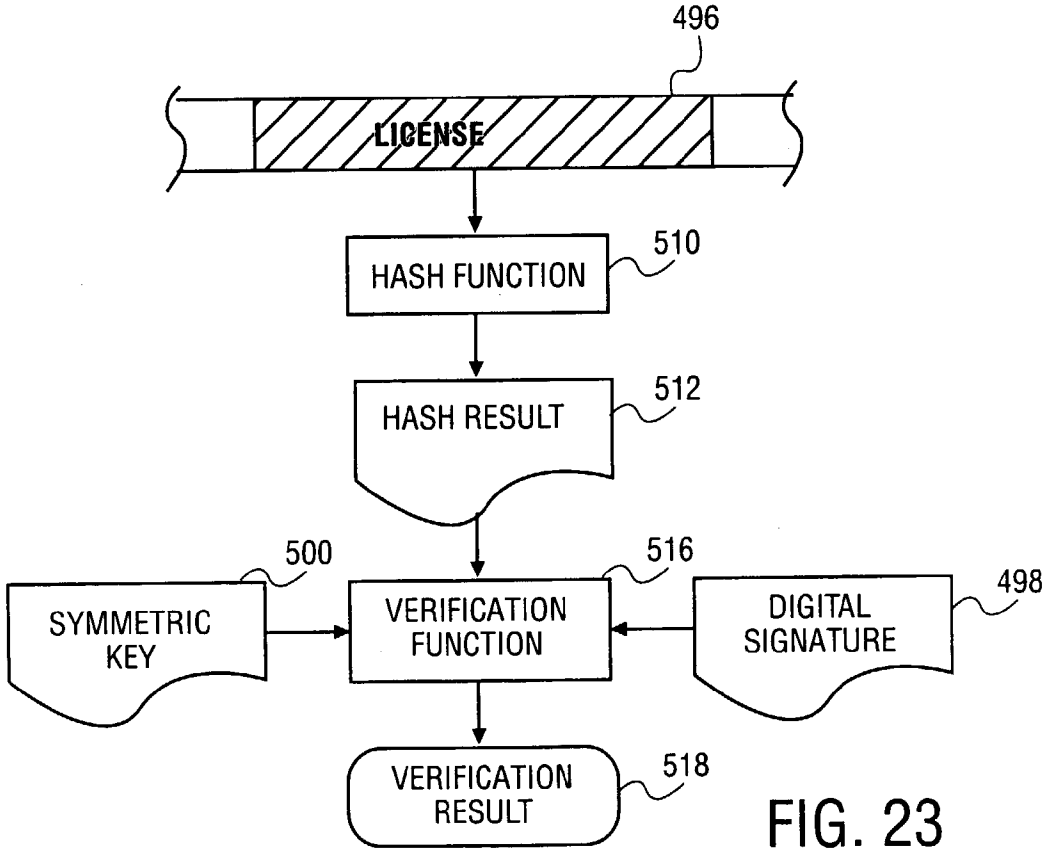
496
LICENSE
HASH FUNCTION
510
HASH RESULT
512
500
SYMMETRIC KEY
516
VERIFICATION FUNCTION
DIGITAL SIGNATURE
498
VERIFICATION RESULT
518

FIG. 23

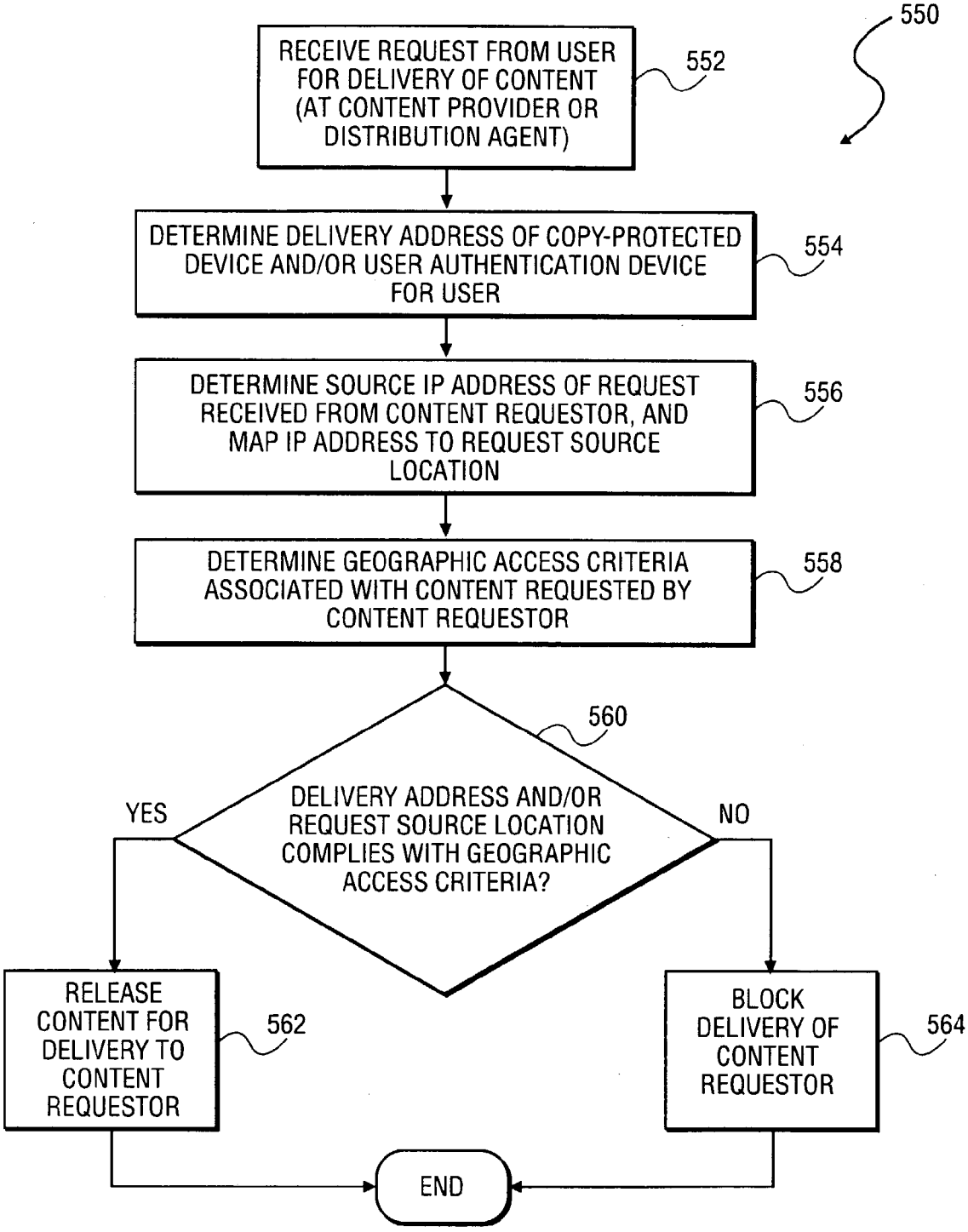
550
RECEIVE REQUEST FROM USER FOR DELIVERY OF CONTENT (AT CONTENT PROVIDER OR DISTRIBUTION AGENT)
552
DETERMINE DELIVERY ADDRESS OF COPY-PROTECTED DEVICE AND/OR USER AUTHENTICATION DEVICE FOR USER
554
DETERMINE SOURCE IP ADDRESS OF REQUEST RECEIVED FROM CONTENT REQUESTOR, AND MAP IP ADDRESS TO REQUEST SOURCE LOCATION
556
DETERMINE GEOGRAPHIC ACCESS CRITERIA ASSOCIATED WITH CONTENT REQUESTED BY CONTENT REQUESTOR
558
560
DELIVERY ADDRESS AND/OR REQUEST SOURCE LOCATION COMPLIES WITH GEOGRAPHIC ACCESS CRITERIA?
YES
NO
RELEASE CONTENT FOR DELIVERY TO CONTENT REQUESTOR
562
BLOCK DELIVERY OF CONTENT REQUESTOR
564
END

FIG. 24

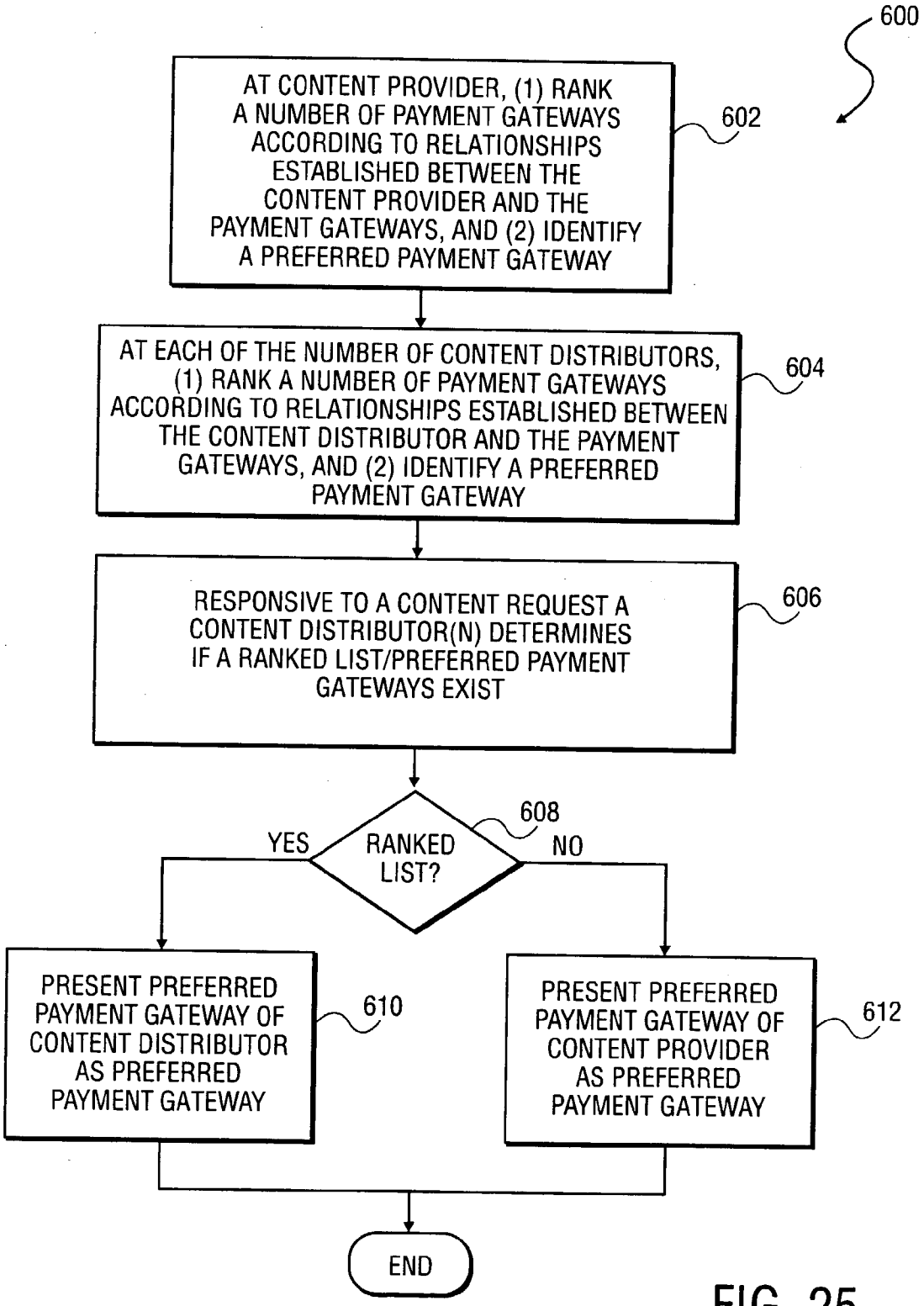
600
AT CONTENT PROVIDER, (1) RANK A NUMBER OF PAYMENT GATEWAYS ACCORDING TO RELATIONSHIPS ESTABLISHED BETWEEN THE CONTENT PROVIDER AND THE PAYMENT GATEWAYS, AND (2) IDENTIFY A PREFERRED PAYMENT GATEWAY
602
AT EACH OF THE NUMBER OF CONTENT DISTRIBUTORS, (1) RANK A NUMBER OF PAYMENT GATEWAYS ACCORDING TO RELATIONSHIPS ESTABLISHED BETWEEN THE CONTENT DISTRIBUTOR AND THE PAYMENT GATEWAYS, AND (2) IDENTIFY A PREFERRED PAYMENT GATEWAY
604
RESPONSIVE TO A CONTENT REQUEST A CONTENT DISTRIBUTOR(N) DETERMINES IF A RANKED LIST/PREFERRED PAYMENT GATEWAYS EXIST
606
RANKED LIST?
608
YES
NO
PRESENT PREFERRED PAYMENT GATEWAY OF CONTENT DISTRIBUTOR AS PREFERRED PAYMENT GATEWAY
610
PRESENT PREFERRED PAYMENT GATEWAY OF CONTENT PROVIDER AS PREFERRED PAYMENT GATEWAY
612
END

FIG. 25

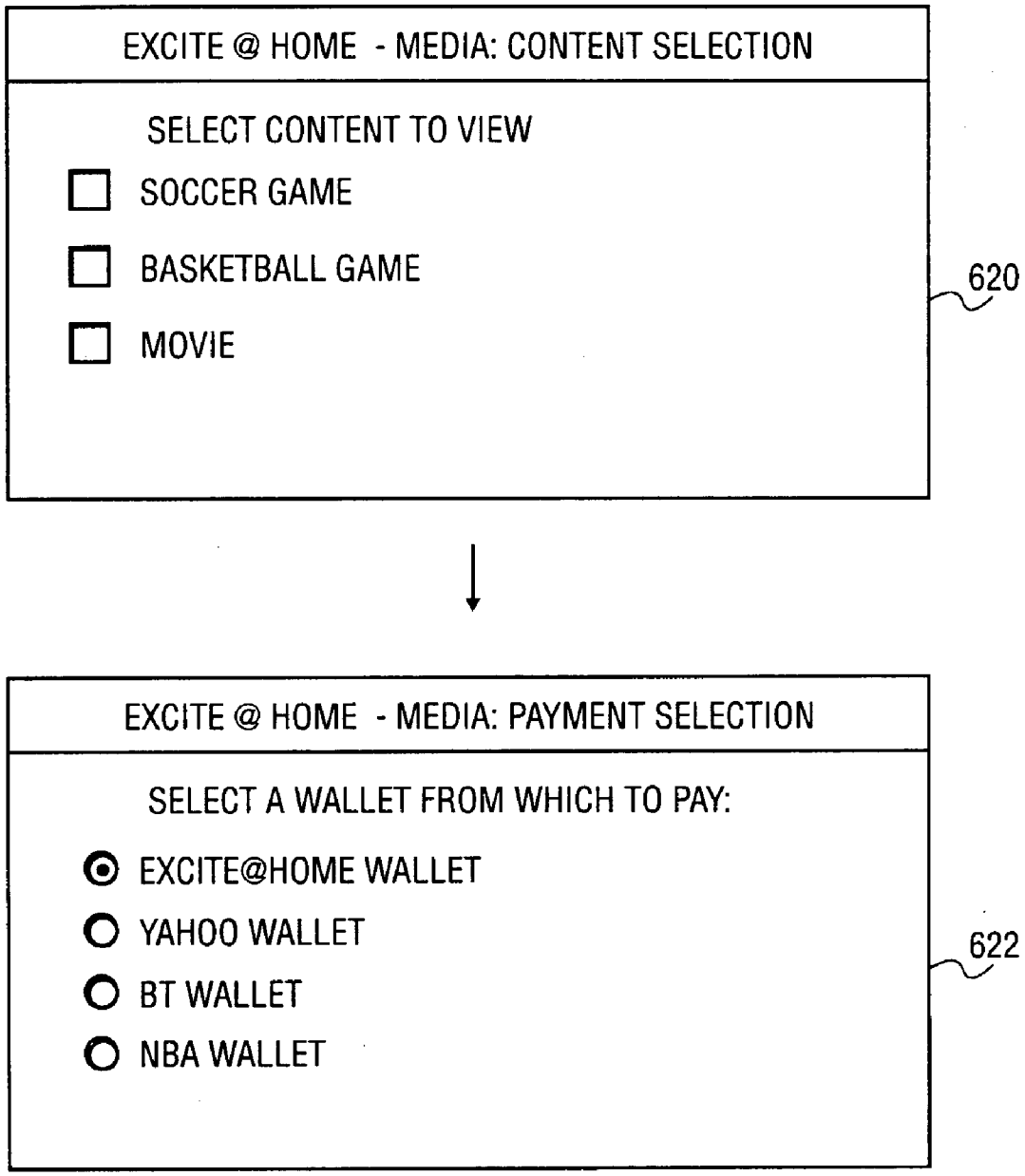
EXCITE @ HOME - MEDIA: CONTENT SELECTION
SELECT CONTENT TO VIEW
SOCCER GAME
BASKETBALL GAME
MOVIE
620
EXCITE @ HOME - MEDIA: PAYMENT SELECTION
SELECT A WALLET FROM WHICH TO PAY:
EXCITE@HOME WALLET
YAHOO WALLET
BT WALLET
NBA WALLET
622

FIG. 26

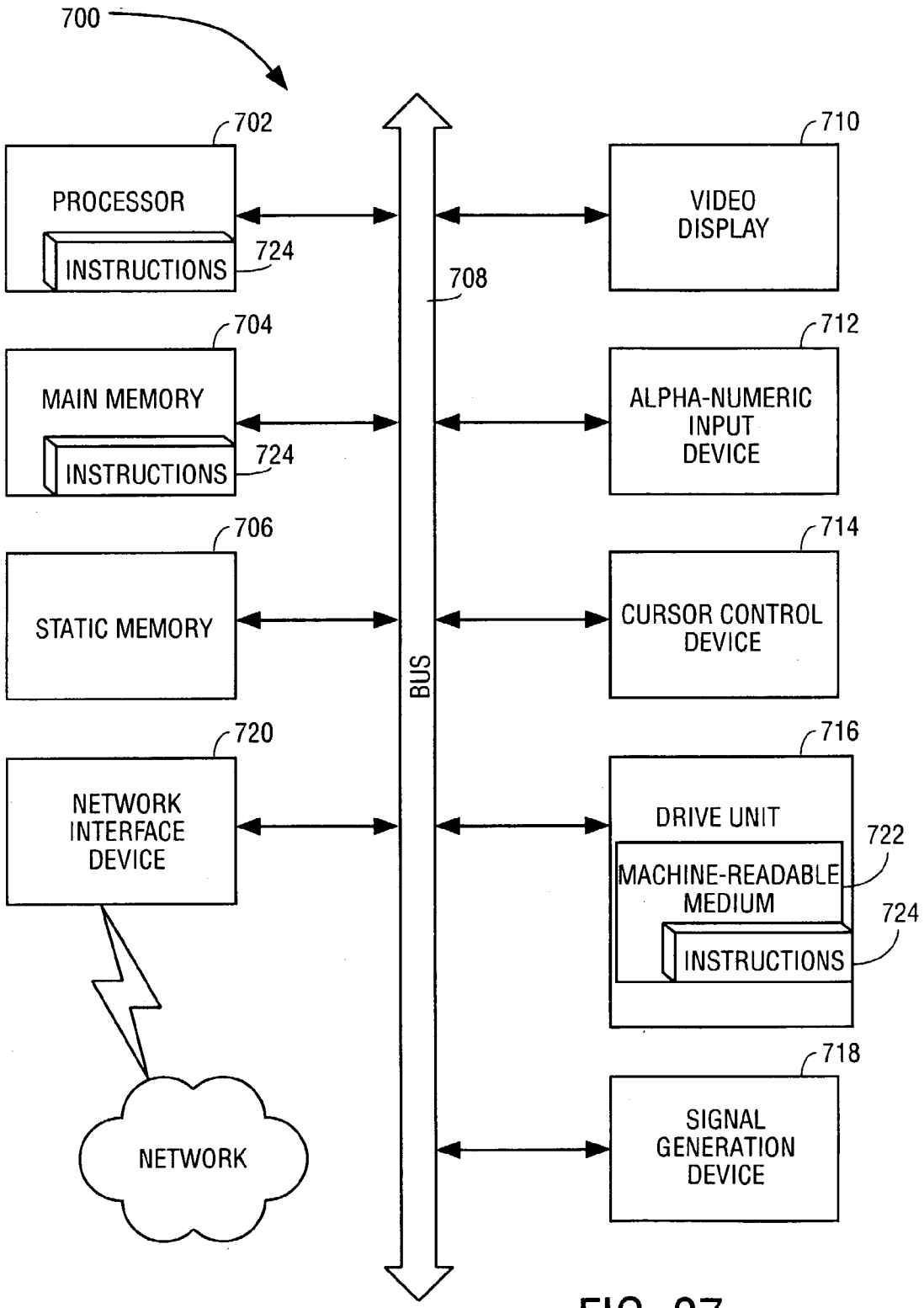
700
702
PROCESSOR
INSTRUCTIONS
724
704
MAIN MEMORY
INSTRUCTIONS
724
706
STATIC MEMORY
720
NETWORK INTERFACE DEVICE
NETWORK
BUS
708
710
VIDEO DISPLAY
712
ALPHA-NUMERIC INPUT DEVICE
714
CURSOR CONTROL DEVICE
716
DRIVE UNIT
722
MACHINE-READABLE MEDIUM
724
INSTRUCTIONS
718
SIGNAL GENERATION DEVICE

FIG. 27

METHOD AND SYSTEM TO DIGITALLY SIGN AND DELIVER CONTENT IN A GEOGRAPHICALLY CONTROLLED MANNER VIA A NETWORK

CROSS REFERENCE TO RELATED APPLICATIONS

[0001] This application claims benefit to international application No. PCT/US01/19271, filed on Jun. 15, 2001.

[0002] This application is related to the following applications:

[0003] 1. METHOD AND SYSTEM TO SECURELY DISTRIBUTE CONTENT VIA A NETWORK, Application Serial No. _____, filed on Dec. 16, 2002.

[0004] 2. METHOD AND SYSTEM TO SECURELY DISTRIBUTE CONTENT VIA A NETWORK, Application Serial No. _____, filed on Dec. 16, 2002.

[0005] 3. METHOD AND SYSTEM TO STORE AND DISTRIBUTE ENCRYPTION KEYS, Application Serial No. _____, filed on Dec. 16, 2002.

[0006] 4. METHOD AND SYSTEM TO SECURE CONTENT FOR DISTRIBUTION VIA A NETWORK, Application Serial No. _____, filed on Dec. 16, 2002.

[0007] 5. METHOD AND SYSTEM TO DYNAMICALLY PRESENT A PAYMENT GATEWAY, Application Serial No. _____, filed on Dec. 16, 2002.

FIELD OF THE INVENTION

[0008] The present invention relates generally to the field of network communications and, more specifically, to a method and system for digitally signing content for secure distribution and delivery via a communications network.

BACKGROUND OF THE INVENTION

[0009] The proliferation of networks, and the widespread acceptance of the Internet as a communication and distribution channel in particular, have presented a number of opportunities for pay media content distribution. Specifically, broadband Internet Protocol (IP) networking and satellite technologies have provided a number of new opportunities for publishing and media content distribution worldwide. The ability of networks to support resource-intensive media, such as streaming media multicasting, is growing rapidly as satellite and broadband IP technologies allow content and service providers to distribute high-quality video to millions of subscribers simultaneously.

[0010] However, these opportunities have been accompanied by concerns regarding content piracy and digital rights management (DRM). A challenge facing traditional pay media distributors is to enable content providers to control their proprietary content, while maintaining the flexibility to distribute media content widely. The increased distribution potential heightens the need to protect and secure media content. For example, a content provider may have particular concerns regarding preventative measures to minimize the possibility of premium content falling into wrong hands, and the enforcement of copyrights.

[0011] Conditional Access (CA) technology for traditional broadcasting systems is based on implementing business rules in a secure device (e.g., a smart card) located at the subscriber receiving device. Access to content is controlled by encrypting the content with a key. The secure device will only release this key to the decrypting device if the subscriber fulfills the access conditions set by the operator. A problem with such security systems is that the secure devices in the field need to be replaced when new business rules are introduced or when the security system is 'hacked'. When a large number of secure devices in the field need to be updated, it will be appreciated that the cost implications are significant. In the case of large numbers this can be a very expensive exercise.

[0012] The Internet is becoming a platform for content delivery to millions of users worldwide. Using the Internet for secure content delivery introduces several problems. For example, standard Client/Server systems often cannot handle the load associated with large pay-per-view events, as a single central security server is typically not equipped to handle millions of events in a short time period. Further, standard Client/Server systems typically require that a single content encryption key be shared by all users, rendering such systems vulnerable to key hook piracy (extracting the key and distributing the key to unauthorized users). Distributed security systems to manage access to content (e.g., LDAP) partially address the first problem identified above, but do not protect the content encryption keys from unauthorized operators.

[0013] A rapidly growing broadband Internet audience is making the Internet an exciting place to stream audio and video directly to millions of users worldwide. To overcome Internet congestion, streaming media may be pushed to the edges of the Internet (e.g., to the ISP's), where it is cached and from where the media can be streamed at high quality to the end user. Content owners are increasingly using the Internet are a platform to deliver high quality programming to a large and rapidly growing audience. However, content providers are often reluctant to put premium content on the Internet, as digital content can easily be stored, forwarded and copied without any degradation by any user with a computer and a (broadband) Internet connection. Copy protection standards, such as those specified by 5C, at the end user device using a physical secure device for decryption are expensive and somewhat unsafe. An experienced hacker can typically break into the secure device and retrieve the decrypted content and redistribute the content anonymously or, in a worst-case scenario, retrieve a decryption key and redistribute the content anonymously.

[0014] Watermarking techniques at the end user device using a physical secure device may be expensive and unsafe, as any experienced hacker can break into the secure device and "catch" the content before it is watermarked.

[0015] When content is encrypted and distributed to a large group of subscribers via a communications network, there exists a danger that one of the subscribers may decrypt the content and, during the decryption process, extract a content (or product) encryption key that was used by a content provider to encrypt the content. Assuming the encrypted content is easily available for unauthorized users, this allows for so-called "key hook piracy" whereby the fraudulent, authorized user distributes the product key to

unauthorized users, possibly together with the encrypted content. Distributing a single content encryption key over a communications network, such as the Internet, can be done very efficiently.

[0016] When a content provider wants to secure and sell premium content for distribution over a large worldwide network, such as the Internet, there are a number of functions and systems that may need to be installed for a successful implementation. For example, secure storage and distribution of content encryption (or product) keys may be required to prevent exposure of the content (or product) encryption keys to a fraudulent operator or user. The exposure of such content encryption keys may result in a significant loss of revenue because of piracy. Further, a secure and scaleable key distribution system, which can manage a large number of subscribers simultaneously, may need to be in place. A scalable key distribution system may become critical to distribute content associated with large-scale live events. The implementation and operational costs associated with system software and hardware required to implement these functions may be high for a single content provider.

[0017] Current hardware-based content security solutions typically combine user authentication and content security in one module (e.g., a single smart card or other tamper proof environment is used to authenticate the user and store/process content keys). This arrangement does not allow for situations in which a user orders content, using a secure identification device (such as a PKI-enabled banking smart card or mobile device including a PKI-enabled SIM chip), and views the content using a copy-protected viewing device other than a viewing device that is integral with the secure identification device. For example, the user may wish to access the content utilizing a copy-protected device that is not linked with a specific user, and that can therefore not be used to identify the user.

[0018] Content licenses, such as those implemented by Microsoft Windows Media Digital Rights Management (DRM) technology and Intel ISIS, are signed by a private key of the license issuer as proof of the authenticity of the license to a content player (e.g., a set-top box). The signature of the content license with a private key prevents hackers from altering valid licenses and generating invalid licenses. However, assigning a license utilizing a private key operation is computationally expensive when a large number of simultaneous transactions are required. In addition, the implementation and operational costs of managing private keys and associated certificate authorities may be prohibitive.

[0019] Networks (e.g., the Internet) are becoming increasingly attractive to content providers as alternative distribution platforms for content, next to traditional TV broadcasting. It is desirable to provide a content distributor with a degree of geographic control over the distribution of content and to enable a content distributor to block users in certain countries or regions from accessing certain content. For example, a sports club may want to distribute a live game over the Internet worldwide, but may need to block users in certain countries from accessing the content due to exclusive broadcasting rights that have been sold to national broadcasters.

[0020] Traditional network-based pay media solutions require users to register payment information (e.g., credit card details) with a content distributor. This approach poses a number of burdens on users. Specifically, users may be required to provide financial information to companies (e.g., content distributors) that they do not trust. Further, users may be required to provide substantially identical financial information to a large number of content distributors if a user obtains content from a variety of sources. These burdens potentially create a barrier to entry for users.

SUMMARY OF THE INVENTION

[0021] In accordance with the present invention, there is provided a method and system to digitally sign a content license associated with content. The content license is generated at a content provider. The content license is signed utilizing a symmetric key. In an exemplary embodiment, symmetric key encrypts the content. In an alternative exemplary embodiment, symmetric key encrypts a product key that in turn encrypts the content.

[0022] According to another aspect of present invention, there is provided a method and system to distribute content via a network in a geographically controlled manner. A request is received from a content requestor for delivery of content to the content requestor via the network. A content requestor authentication process is performed, the content requestor authorization process including determining a geographic location associated with the content requestor, determining geographic access criteria associated with the content, and determining whether the geographic location complies with the geographic access criteria. The content is released delivery to the content requestor if the content location complies with the geographic access criteria. In one exemplary embodiment, the determining of the geographic location includes determining a delivery address to which a copy-protected device associated with the content requestor was delivered. In an alternative exemplary embodiment, the determining of the geographic location includes determining a delivery address that a user authentication device associated with the content requestor was delivered. The determining of the geographic location may also include mapping a source network address of the request for the delivery of the content to a request source location.

[0023] Other features of the present invention will be apparent from the accompanying drawings and from the detailed description that follows.

BRIEF DESCRIPTION OF THE DRAWINGS

[0024] The present invention is illustrated by way of example and not limitation in the figures of the accompanying drawings, in which like references indicate similar elements and in which:

[0025] **FIG. 1** is a block diagram illustrating processing of content as it is communicated from a content provider, via a content distributor, to a content destination, according to an exemplary embodiment of the present invention.

[0026] **FIG. 2** is a block diagram illustrating further details regarding software components that may reside at various locations of the content distribution system to facilitate distribution and delivery processes, according to an exemplary embodiment of the present invention.

[0027] **FIG. 3** is a block diagram illustrating further architectural details regarding an exemplary embodiment of a content distribution system.

[0028] **FIG. 4** is a diagrammatic representation of a number of real-time processes, databases and user interfaces that together provide the functionality of a conditional access server, according to an exemplary embodiment of the present invention.

[0029] **FIG. 5** is a block diagram illustrating various processes that constitute a conditional access agent, according to an exemplary embodiment of the present invention.

[0030] FIGS. **6A-6B** show a flowchart illustrating a method, according to an exemplary embodiment of the present invention, of processing a content request received from a content destination.

[0031] **FIG. 7** is a flowchart illustrating a method, according to an exemplary embodiment of the present invention, of securely delivering content from a content provider to a content destination via a content distributor, where the content distributor performs an association operation relating to the content.

[0032] FIGS. **8A-8B** are block diagrams illustrating, at a high level and according to an exemplary embodiment of the present invention, a method of combating key-hook piracy by encrypting clear content with a relatively large number of random, time varying session keys.

[0033] **FIG. 9** is a flowchart illustrating a method, according to an exemplary embodiment of the present invention, of encrypting content utilizing a random, time varying sequence of session keys to combat key-hook piracy.

[0034] FIGS. **10A-10B** show a flow chart illustrating a method, according to an exemplary embodiment of the present invention, of distributing cached content from a content distributor to a content destination, responsive to a request for the content from the content destination.

[0035] **FIG. 11** is a block diagram illustrating a pay media conditional access service provider, according to an exemplary embodiment of the present invention, and illustrates an interaction of a conditional access service provider with multiple content providers, as well as with one of multiple conditional access agents.

[0036] **FIG. 12** is a flowchart illustrating a method, according to an exemplary embodiment of the present invention, whereby a conditional access service provider provides security functions to multiple parties within a content distribution system.

[0037] **FIG. 13** is a flowchart illustrating a method, according to an exemplary embodiment of the present invention, of generating a product key at a content provider and storing the product key at a conditional access provider.

[0038] **FIG. 14** is a flowchart depicting a method, according to an exemplary embodiment of the present invention, of distributing an agent secret key from a condition access agent to an ASP conditional access server.

[0039] **FIG. 15** is a flowchart illustrating a method, according to an exemplary embodiment of the present invention, of product key distribution from a conditional access service provider to a conditional access agent.

[0040] **FIG. 16** is a block diagram illustrating a system, according to an exemplary embodiment of the present invention, that provides a product key to access content upon receipt and verification of two separate certificates, namely a user device certificate and a copy-protected device certificate.

[0041] **FIG. 17** is a flowchart illustrating a method, according to an exemplary embodiment of the present invention, to secure content for distribution via a network by employing separate user device and copy-protected device authentication processes to protect content from unauthorized access.

[0042] **FIG. 18** is a flowchart illustrating a method, according to an exemplary embodiment of the present invention, of communicating a product key, encrypted with the public keys of both a copy-protected device and a user authentication device.

[0043] **FIG. 19** is a diagrammatic representation of a content license, according to an exemplary embodiment of the present invention.

[0044] **FIG. 20** is a flowchart illustrating a method, according to an exemplary embodiment of the present invention, of signing a content license utilizing a symmetric key.

[0045] **FIG. 21** is a diagrammatic representation of a further content license, according to an exemplary embodiment of the present invention, that is signed utilizing a digital signature in the form of a symmetric key.

[0046] **FIG. 22** is a flowchart illustrating further details regarding a method, according to an exemplary embodiment of the present invention, of generating a digital signature for a license utilizing a symmetric key.

[0047] **FIG. 23** is a flowchart illustrating a method, according to an exemplary embodiment of the present invention, of verifying a content license utilizing a digital signature that embodies a symmetric key.

[0048] **FIG. 24** is a flowchart illustrating a method, according to an exemplary embodiment of the present invention, of distributing content via a network in a geographically controlled manner.

[0049] **FIG. 25** is a flowchart illustrating a method, according to an exemplary embodiment of the present invention, to dynamically present a payment gateway to a content requestor.

[0050] **FIG. 26** illustrates an exemplary sequence of interfaces that may be presented by a client application executing at a content destination to present an order list of payment gateways.

[0051] **FIG. 27** is a block diagram illustrating a machine, in an exemplary form of a computer system, that may operate to execute a sequence of instructions, stored on a machine-readable medium, for causing the machine to perform any of the methodologies discussed in the present specification.

DETAILED DESCRIPTION

[0052] Methods and systems to digitally sign and distribute content in a geographically controlled manner via a network are described. In the following description, for purposes of explanation, numerous specific details are set forth in order to provide a thorough understanding of the

present invention. It will be evident, however, to one skilled in the art that the present invention may be practiced without these specific details and that these specific details are exemplary.

[0053] Overview—Content Distribution System

[0054] **FIG. 1** is a diagrammatic representation of a content distribution system **10**, according to an exemplary embodiment of the present invention. The system **10** may conceptually be viewed as comprising a distribution process **12** and a delivery process **14**. Within the distribution process **12**, multiple content providers **16** (e.g., a content producer or owner) distribute content via a network **18** (e.g., the Internet (wireless or wired)) to content distributors (or distribution points) **20**. The distribution of content from a content provider **16** to a content distributor **20** may be as a multicast via satellite, as this provides an economic way to distribute content to a large number of content distributors **20**.

[0055] Each of the content distributors **20** caches content received from multiple content providers **16**, and thus assists with the temporary storage of content near the "edges" of a network so as to reduce network congestion that would otherwise occur were a content provider **16** to distribute content responsive to every content request received from a content consumer. Each content distributor **20** is equipped to respond to requests received via the network **18** from the multiple content destinations **22** (e.g., users) within a specified service area or conforming to specific criteria. Specifically, a content distributor **20**, after performing the necessary authorization and verification procedures, may forward content that it has cached to a content destination **22** or, if such content has not been cached, may issue a request for the relevant content to a content provider **16**. For example, if the content comprises a live "broadcast", the content may be directly forwarded via the content distributor **20** to the content destination **22**.

[0056] Typically, a request for content from a content destination **22** is re-routed to content distributor **20** located nearby the requesting content destination **22**. The requested content is then streamed (or otherwise transmitted) from the content distributor **20** to a media terminal (e.g., a personal computer (PC), set-top box (STB), a mobile telephone, a game console, etc.) at the content destination **22**.

[0057] **FIG. 1** illustrates, at a high-level, the processing of content as it is communicated from a content provider **16**, via a content distributor **20**, to a content destination **22**. At the content provider **16**, clear content **24** is encrypted utilizing, for example, a symmetric product key (or content key) to generate encrypted content **26**. It will thus be appreciated that the content provider **16** will be particularly concerned about security pertaining to the product key as access to this key potentially allows for regeneration of the clear content **24**. The encrypted content **26** (or cipher text) is then communicated from the content provider **16**, via the network **18**, to the content distributor **20**. A conditional access agent **28**, which represents the interests of the content provider **16** at the remote content distributor **20**, may perform a number of operations in a secure environment with respect to the encrypted content **26**. In one embodiment, the conditional access agent **28** decrypts the encrypted content **26** to regenerate the clear content **24** within a secure environment, and watermarks the clear content for distribution to a specific content destination **22**. Watermarked content **30** may then be distributed from the content distributor **20** via the network **18**, to a conditional access client **32** at the content destination **22**. In an alternative embodiment, the conditional access agent **28** at the content distributor **20** may re-encrypted the content with a public key of a copy-protected device at the content destination **22**. In any event, the clear and watermarked content **30** is then available for viewing and consumption at the content destination **22**.

[0058] **FIG. 2** is a block diagram showing further details regarding software components that may reside at the various locations of the system **10** to facilitate the distribution and delivery processes **12** and **14**. The content provider **16** operates a content provider server **34** that is responsible for the actual distribution of content from the content provider **16**. For example, the content provider server **34** may comprise a streaming media server (e.g., the Real Networks streaming media server developed by Real Networks of Seattle, Washington State or a Microsoft media server developed by Microsoft of Redmond, Washington state). A conditional access server **36** (e.g., the Sentriq Server developed and distributed by Mindport Sentriq from San Diego, Calif.) operates to define and store access rights to content of the content provider **16**, to perform digital rights management, to encrypt content, and to manage and distributed product keys. To this end, the content provider server **34** and the conditional access server **36** are shown to communicate registration keys and access criteria.

[0059] While the conditional access server **36** is shown to reside with a content provider **16**, in an alternative embodiment, a conditional access server **37** may reside at a conditional access service provider (ASP) **38**. In this case, the conditional access server **37** may perform the above-described functions for multiple content providers **16**.

[0060] The exemplary content distributor **20** is shown to host a local content server **40** and a conditional access agent **28**. The local content server **40** may again be a streaming media server that streams cached (or freshly received) media. The conditional access agent **28** operates to provide intelligent content and revenue security to content providers **16** by processing access and revenue criteria, personalizing content for delivery to a content destination **22**, and personalizing and managing key delivery to a content destination **22**. Broadly, the conditional access agent **28** operates securely to authenticate a content destination **22** (e.g., utilizing secure tokens and X.509 certificates), securely to retrieve and cache product key information and access criteria, and to forward processed transactions to a commerce service provider **42** that provides billing and clearance services. For example, a conditional access agent **28** may evaluate a content request from a content destination **22** based on access criteria specified by a content provider **16**, local date and time information, and user credentials and authentication. If a content destination **22** is authorized and/or payment is cleared, requested content may optionally be decrypted, personally watermarked, personally re-encrypted and delivered to the content destination **22**

[0061] A content destination **22** is shown to include a secure device **46** (e.g., a copy-protected device such as a set-top box (STB)) and to host a conditional access client **48**. The conditional access client **48** may reside on a personal computer or on the secure device **46**. Where the conditional access client **48** resides on a personal computer it may, for

example, launch responsive to the issuance of a request from a further client program (e.g., a browser) for access certain content. The conditional access client **48** operates to communicate a public key of the secure device **46** to a conditional access agent **28** and also performs user authentication to verify that a particular user is authorized to initiate a transaction. The conditional access agent **28** utilizes copy-protected device technology to stream content to a viewing device.

[**0062**] To review, the content distribution system **10** is implemented by a distributed collection of conditional access servers **36**, conditional access agents **28**, and conditional access clients **48** that operate in conjunction with media servers and viewing devices (e.g., players) to protected the rights of a content provider **16** in specific content, while facilitating the widespread distribution of content. A conditional access server **36** enables the content provider **16** to encrypt and associated access criteria (e.g., pay-per-view, pay-per-time, subscription) with content. The conditional access server **36** also manages subscriptions and provides monitoring and statistic tools to a content provider **16**. A conditional access agent **28** is a cryptographic component that insures that access criteria, as defined by content providers **16**, are enforced. Conditional access agents **28** are located within a distribution network (e.g., at an edge server) and validate subscriber content requests against, for example, content access criteria, local date and time, and subscriber credentials. A conditional access client **48** is located at a destination device (e.g., the PC, a STB, and mobile phone, game console or the like) and manages an interface between a secure device **46** and a subscriber.

[**0063**] **FIG. 3** is a block diagram showing further architectural details regarding an exemplary embodiment of a content distribution system **10**. The functioning of the various components of the content distribution system **10**, as shown in **FIG. 3**, will now be the described in the context of registration, content ordering and transaction processing operations.

[**0064**] The content distribution system **10** consists of a number of sub-systems that together provide a required functionality. In one embodiment, these sub-systems seek to enable the Internet infrastructure to be utilized as a safe and secure medium for online selling and buying of content, data, programs, products and services context, including video and audio encoders, servers, players, clearing systems and existing Web sites.

[**0065**] The content distribution system **10**, in one embodiment, seeks to provide at least the following functions:

[**0066**] (1) Conditional access to management through various access criteria schemes.

[**0067**] (2) End-to-end content security and copy protection, using encryption and watermarking technology.

[**0068**] (3) Transaction and purse management, using Public Key Infrastructure (PKI) and eXtensible Markup Language (XML) technology.

[**0069**] (4) Pay-per-view, pay-per-time and subscription based access.

[**0070**] (5) Access control on the basis of region and date/time.

[**0071**] (6) Varying prices on the basis of region and date/time.

[**0072**] (7) Management of a variety of (debit and credit) purses.

[**0073**] (8) Scaling to many (simultaneous) subscribers using a highly distributed architecture.

[**0074**] (9) Secure device portability, using the standard PKCS#11 interface.

[**0075**] (10) User platform portability by defining an interface based on HTTP and XML, allowing a range of subscriber platforms (PC/STB/GSM).

[**0076**] The above listed functions, in one embodiment, are enabled primarily by the following components:

[**0077**] (1) Conditional access clients **48** are located at content destinations **22** to sign content transactions and manage the content decryption process. The conditional access clients **48** each operate in conjunction with a secure device **46** (e.g., an e-Token or smart card).

[**0078**] (2) Conditional access servers **36** are located at content providers **16** or at conditional access service providers **38** as a content security ASP for merchants. In the conditional access service provider embodiment, a content provider **16** may access a website operated by the conditional access service provider **38** to secure content and to define access conditions (pay per view, subscription, etc) associated with the content.

[**0079**] (3) Conditional access agents **28** are located at various points within network to act as "brokers" enforcing the security settings that are associated with content by content providers **16**. Conditional access agents **28** may optionally include additional encryption and watermarking technology to increase the level of security 'at the last mile'.

[**0080**] (4) Secure device servers **44** are located at commerce service providers **42** (e.g., pay-media operators) or payment gateways to manage the secure devices and associated purses in the field.

[**0081**] For the purpose of the immediately following description, assume that content has already been decrypted by a content provider **16**. Live content requires a slightly different approach at the initial stage of content protection (real-time encryption is required).

[**0082**] A content registration and protection operation is initiated by a content provider **16** that has a content item that needs to be secured from unauthorized access. In one embodiment, the content provider **16** accesses a Web server operated by the conditional access service provider **38**, from which the content provider **16** downloads a content security management application (not shown). The content security management application allows the content provider **16** to secure (encrypt) the content and associate the content with particular access criteria. The content is registered at the conditional access server **37**, operated by the conditional access service provider **38**, together with the access criteria and a product key that was used for encryption of the content. A unique Uniform Resource Locator (URL) linking to the access criteria is included in a content description file

(ASX, SDP or SAP). The content is thus secured and may now be distributed using, for example, unicast or multicast.

[0083] A content ordering operation is commenced upon receipt of a request from a content destination **22** (e.g., a user) for specific content. The user may, for example, be running a browser on a personal computer and want to view a content item provided by of a particular content provider **16**. When selecting the content item, the browser detects a tag containing a URL. The browser passes the URL to the conditional access client **48**, also executing on the personal computer, to commence a transaction.

[0084] The conditional access client **48** initiates a secure session with a conditional access agent **28** to request an order for the relevant content item. If the content item is not cached at the content distributor **20** as cached content, the conditional access agent **28** retrieves access criteria for the requested content item from the conditional access server **36** and forwards a derived XML signing request to the conditional access client **48**. The conditional access client **48** parses the XML signing request, displays order information (such as a price) to the user and prompts for a Personal Identification Number (PIN) code and confirmation by way of a user interface. The user confirms the order, and the conditional access client **48** digitally signs the order confirmation using the secure device **46**. The signed order is sent to the conditional access agent **28** that verifies the signed confirmation order and the user credentials. The conditional access agent **28** manages the content security process (e.g., watermarking, re-encryption) until an access time has expired, after which the content destination **22** will no longer be able to access the content.

[0085] A transaction processing operation occurs concurrently with the content ordering operation. More specifically, the conditional access agent **28** will forward the signed confirmation order (i.e., transaction) to the secure device server **44** of the commerce service provider **42** to update a secure device purse and to prepare the transaction for clearing. The commerce service provider **42** processes the transaction and makes the appropriate money transfers.

[0086] The secure device server **44** interfaces with an external commerce service provider **42** to forward secured transactions. In one exemplary environment, a pay media operator or payment gateway is hosted by the service provider **42**. The value of the transaction may be negotiated between the various parties (content owner/provider, network provider/ISP, payment gateway, etc).

[0087] The conditional access client **48** interfaces with the secure device **46** at the content destination **22**. Example secure devices **46** are smart cards or e-Tokens. A secure device **46** may utilize the PKCS#11 interface to provided device independent.

[0088] The content destination **22** may also employ client devices utilizing non-PC client platforms, such as Set Top Boxes (STBs) and mobile telephones enabled with (smart card) PKI technology. A client device employed at a content destination **22** may run an interactive application (such as the OpenTV software suite) to order secure content items using a regular pay television smart card.

[0089] The conditional access client **48** and secure device **46** interface with the local content server **40** (e.g., a media server) and client applications to secure a control channel (such as RTSP or HTTP) and data channel (such as MPEG-4 over RTP).

[0090] The secure device server **44** provides an interface for external payment registration servers (such as used for regular web sites) to allow automated purse management.

[0091] Overview—Conditional Access Server **36**

[0092] As stated above, a conditional access server **36** may reside at a content provider location, or may be deployed by a conditional access service provider **38**. A conditional access server **36** provides at least the following functions:

[0093] (1) Allows content providers **16** to assign access criteria (or rule information) to content.

[0094] (2) Allows content providers **16** to create and manage content products (subscription types).

[0095] (3) Management of the content encryption keys and key distribution to the conditional access agents **28**.

[0096] (4) Management of subscriptions (generation, storage and distribution) and forwarding of signed subscription transactions to a commerce service provider (e.g. a payment gateway).

[0097] (5) Processing of transactional information (monitoring).

[0098] Each of the above functions will now briefly be described. The content provider **16** defines the access criteria (AC) using an access criteria profile editor (or Digital Rights Manager) (not shown) that generates a unique URL that is distributed together with the content. The generated access criteria are stored in a database together with the appropriate product key (optionally encrypted under a storage key), a digital signature and a content tag (i.e., a short description). A conditional access agent **28** retrieves the appropriate access criteria when subscribers request access to the associated content. The access criteria are stored in such a way that retrieval can be performed efficiently (e.g., the criteria are organized by content provider and location for which the access criteria is appropriate).

[0099] Conditional access agents **28** are assigned a certain location identifier (ID), according to the physical region that they serve. Multiple conditional access agents **28** may be assigned to the same location ID. The conditional access server **36** will map the conditional access agent ID to the appropriate region ID's to lookup the access criteria that are suitable for that agent, if any.

[0100] As locations may be assigned to multiple regions, and access criteria may be defined for multiple regions, there may be a conflict (one location may map to multiple conflicting access criteria sets). To address this conflict, the operator can associate a region priority code to indicate which region should be given priority.

[0101] A content provider **16** may also define new content products and manage subscription requests utilizing the conditional access server **36**. A content product may, for example, have an identifier, a name, duration (usually a month), a start date and end date. A subscription may be an

"instance" of a content product associated with a certain secure device that ordered the product and a subscription start and end date.

[0102] A conditional access server **36** also processes incoming transactions and forwards them to the appropriate commerce service provider **42**. The content provider **16** may be able to monitor the processed transactions.

[0103] **FIG. 4** is a diagrammatic representation of a number of real-time processes, databases and user interfaces that together provided the functionality of a conditional access server **36**, according to one embodiment of the present invention. The below described server processes of the conditional access server **36** communicate with external processes, such as a conditional access agent **28** and the secure device server **44**, utilizing the described interfaces.

[0104] A content rights manager **60** allows a content provider **16** to associated access rights and criteria with content items. Access rights are organized utilizing profiles in order to reduce operational efforts. Profiles may be created utilizing a profile rights manager **62**. The profile rights manager **62** allows a content provider **16** to create templates for access criteria, based on regional, time, payment and subscription parameters. A product manager **64** allows a content provider **16** to define content products that are available for subscription.

[0105] A cash monitor **66** is a user interface to monitor the value of transactions for a particular content provider **16**, potentially in real-time. An access criteria server **68** is a HTTP server providing access criteria and keys to conditional access agents **28**.

[0106] A subscription form server **70** is a HTTP server providing subscription forms (e.g., a signed list of subscriptions) for a specific secure device to conditional access agents **28**. Specifically, a subscription form is a clear XML text of a current subscription associated with a secure token, signed by the conditional access server **36**. A subscription form contains a signed list of time-constrained subscriptions bound to an issuer (e.g., a content provider **16**) and a secure device serial number. A subscription form is signed by the conditional access server **36** to prove the authenticity thereof and maintain integrity.

[0107] A subscriber server **72** is a HTTP server that can securely process subscription requests. A transaction server is utilized to monitor transactions and update the real-time cash monitor **66**.

[0108] Below are set out a number of tables and fields, according to an exemplary embodiment of the present invention, which may be utilized by the conditional access server **36**.

[0109] A table Resource represents general resource values for the conditional access server **36**. This table is used to store system variables such as the port number for accepting AC server connections or the debug level.

Field	Description
ResourceId	
Name	

-continued

Field	Description
Value	
DefaultValue	
Description	

ResourceId is the unique key.

[0110] The table Product represents product information.

Field	Description
ProductIssuerId	Issuer of the product
ProductId	
Name	
Duration	Used in combination with field below . . .
DurationUnit	Subscription duration unit 1 = minutes, 2 = hours, 3 = days, 4 = weeks, 5 = months, 6 = years
Duration2	Absolute value of the duration (future use only, when 'Duration' and 'DurationUnit' are not flexible enough)
ParentalCode	Minimum age for accessing content
AutoRenewal	Subscription is automatically renewed after expiration (future use)
StartDate	Product becomes available for sale
EndDate	Product no longer available
InfoURL	URL to subscription information

ProductIssuerId and ProductId form the unique key.

[0111] The table ProductAC represents the access criteria (usually payment) for a subscription using a certain payment gateway or commerce service provider.

Field	Description
ProductIssuerId	
ProductId	
PGWId	Payment gateway ID
ParentalCode	Minimum age (future use, if you want to have parental rating control per payment gateway. I.e. nationality related)
Price	Price in whole units (25, 50 is represented as 2550)

ProductIssuerId, ProductId and PGWId form the unique key.

[0112] The table Region represents regional information.

Field	Description
CountryId	
RegionId	
Name	

CountryId and RegionId form the unique key.

[0113] The table Country represents the geographical information.

Field	Description
CountryId	
CountryCode	3 character country code as defined by ISO
Name	Like 'Chello Amsterdam' or 'RoadRunner SD'

CountryId is the unique key.

[0114] The table Merchant represents the content providers **16** that have access to the conditional access server **36**.

Field	Description
MerchantId	Merchant
Name	Name of the merchant
EMail	E-mail address of merchant
InfoURL	Link to information

MerchantId and PGWId form the unique key.

[0115] The table MerchantUser represents the users (operators) of content providers **16**. They possess a secure token to access the conditional access server **36**. This table is used to verify the identity of the content providers **16** when he or she logs on to the system.

Field	Description
Serial	Secure device serial number
MerchantId	Content provider ID linked with the secure device.
EMail	E-mail address of user
UserName	(Optional) name of the user
AccessRights	Integer representing user's access rights. This allows a way to distinguish the access rights of a certain user (for example: A user is allowed access to certain applications only).
SecretKey	
PublicKey	

Serial is the unique key.

[0116] The table MerchantPGW represents the payment gateways (or commerce service providers) that have a clearing agreement with the content providers **16**.

Field	Description
MerchantId	Merchant
PGWId	Payment gateway

MerchantId and PGWId form the unique key.

[0117] The table CAAgent represents information about the conditional access agents **28** in the field.

Field	Description
NetworkId	Network in which it is located (e.g. RoadRunner)
AgentId	
CountryId	Integer representing the country location
RegionId	Integer representing the actual location (e.g. Amsterdam).
Type	Type of agent (token, PCMCIA, etc)
Version	Hardware/Software version
SerialNumber	Serial number of CA Agent secure device
Host	Host (address) of CA Agent
SecretKey	CA Agent Secret key (encrypted with storage key)
PublicKey	CA agent Public Key

NetworkId and CAAgentId form the unique key.

[0118] The table Network represents information about the network of conditional access agents **28**.

Field	Description
NetworkId	
Name	Name of the network provider (e.g. @Home)
Notes	Contractual notes
EMail	E-mail address of network provider
InfoURL	URL to information about network provider

[0119] The table PaymentGateway represents payment gateway information.

Field	Description
PGWId	
Name	
SdsHostName	
Type	Type of payment gateway (1 is reserved for anonymous payment gateway)
Format	Currency format string for future use
ISOCurrency	ISO currency code
EMail	E-mail address of payment gateway
InfoURL	URL to payment gateway information

PGWId is the unique key.

[0120] The table CountryPaymentGateway represents the payment gateways per country. This table is used to limit the number of selectable payment gateways depending on the selected country/region when assigning access criteria to an item.

Field	Description
CountryId	
PGWId	

CountryId and PGWId form the unique key.

[0121] Subscription Tables

[0122] The subscription tables are only accessed by the subscription form server **70** and subscriber server **72**.

[0123] The table SubscriptionForm represents the subscriptions that have been issued to subscribers on behalf of a content provider **16**.

Field	Description
IssuerId	Either 0 (Entriq) or the merchant ID
DeviceSerial	Unique serial of secure device
SubscriptionForm	Digitally signed subscription form

IssuerId and DeviceSerial form the unique key.

[0124] Access Criteria Tables

[0125] The table ItemAC links a particular item (content) with an access criteria profile and a key.

Field	Description
MerchantId	Merchant ID
ItemId	Unique item (content) ID
Description	Short description of content, displayed to subscriber at confirm.
ProfileId	
Policy	Policy indicating security parameters such as encryption algorithm, key length, etc.
ProductKey	(Prime) Product key used for encryption of content
Format	Encoding format such as MPEG-2/ MPEG-4, Real, Windows codec etc.
Bandwidth	Bandwidth in bits/second

MerchantId and ItemId form the unique key.

[0126] There is an index on Description, to allow for quick searching on a description.

[0127] The table ACProfile represents a profile for access criteria and links to actual access criteria sets.

Field	Description
MerchantId	
ProfileId	
Name	

MerchantId and ProfileId form the unique key.

[0128] The table ACProfileCountryBlackout represents the regions that are to be blacked out for a certain profile.

Field	Description
MerchantId	
ProfileId	
CountryId	Country to be blacked out

MerchantId, ProfileId, and CountryId form the unique key.

[0129] The table ACProfileRegionBlackout represents the regions that are to be blacked out for a certain profile.

Field	Description
MerchantId	
ProfileId	
CountryId	Country to be blacked out
RegionId	Region to be blacked out

MerchantId, ProfileId, CountryId and RegionId form the unique key.

[0130] The table ACProfileSet represents an access criteria set (conditions) under which an item is provided to the subscriber.

Field	Description
MerchantId	
ProfileId	
CountryId	
RegionId	
SetId	Sequence number (order is of importance)
SubscriptionFlag	
ProductIssuerId	
ProductId	
PriceFlag	
PGWId	Payment gateway ID
PurchasePrice	
TimePriceFlag	
Time	Viewing time associated with purchase price
TimePrice	(Used for pricing such as 1$ per minute)
ViewTime	Viewing time associated with recurring price (e.g. 1 minute in case of 1$ per minute)
LoyaltyFlag	True if subscriber can earn loyalty points.
LoyaltySchemeId	Loyalty scheme such as air-miles or FFP (future use)
LoyaltyPoints	Number of points (future use)
ParentalFlag	True if access is restricted to certain minimal age
ParentalCode	Minimum age
TimeWindowFlag	True if access must be blocked during certain hours
TimeWindowStart	Local time to start blocking access
TimeWindowEnd	Local time to stop blocking access
DateWindowFlag	True if access must be blocked before or after certain date range
DateWindowStart	
DateWindowEnd	
FormattedAC	Formatted access criteria (future use for improved performance)

MerchantId, ProfileId, CountryId, RegionId and SetId form the unique key.

[0131] Transaction Tables

[0132] The table CashMonitor represents a credit counter for the subscriber transactions and is used for monitoring purposes only.

Field	Description
MerchantId	Merchant (content provider)
PGWId	Payment gateway
ResetDate	
Subscriptions	Total subscription revenues since reset date
PayPerView	Total PPV revenues since reset date

MerchantId and PGWId form the unique key.

[0133] The table Transaction contains all the transactions.

Field	Description	Unique Key
MerchantId	Merchant	
Received		
Type	Subscription/PPV	
CaAgentId	(0 if subscription)	
Transaction		

MerchantId and Received form the key.

[0134] Overview—Conditional Access Agent **28**

[0135] A conditional access agent **28** operates as a secure gatekeeper to actual content provided via a content distributor **20**. A conditional access agent **28**, in one exemplary embodiment of embodiment, is co-located with a local content server **40** to "police" local subscriber accesses to protected content stored on that media server.

[0136] A conditional access agent **28** provides at least two functions namely (1) a verification function that includes verification of content destination (e.g., subscriber) requests for secure content against access criteria defined by a content provider **16**, and (2) a gateway function including decryption, watermarking and re-encryption of secure content, depending on content security settings.

[0137] Dealing more specifically with the verification function and utilizing the example of a subscriber as a content destination **22**, a conditional access agent **28** manages subscriber access to the content by evaluating the access criteria and the subscriber credentials. The agent **28** verifies and processes the subscriber request before (and during) the provision of the requested content. Access criteria are defined by the content provider **16**, signed by a conditional access server **36** and distributed as described above. In one embodiment, the agent **28** selects the first appropriate access criteria set based on the user credentials. The selected access criteria set is sent to the subscriber for signature. This may require an explicit confirmation from the subscriber (in case of a payment) or this may be transparent (in case of a subscription). Subscription forms, originally generated by the subscription form server **70**, are cached locally at the conditional access agent **28**. If a subscription form is not available or out of date, the conditional access agent **28** retrieves the latest subscription form from the appropriate content provider **16**.

[0138] Signed pay per view transactions are also cached by the conditional access agent **28** to allow a subscriber to view a movie multiple times within the allowed time window without charge.

[0139] Not all conditional access clients may support all types of access criteria. The conditional access agent **28** therefore interprets the client type before suggesting a specific access criteria set.

[0140] Turning now to the gateway function performed by a conditional access agent **28**, after a subscriber (or user) has been granted access to the content, a request is sent to the local content server **40** to 'release' the content. This request contains all the necessary data, including the IP destination address/port, subscriber signed access criteria, the subscriber certificate and the key to decrypt the content (encrypted with the public key or secret group key of the conditional access agent **28**). The content is then decrypted, watermarked and optionally re-encrypted with a different key (e.g., a unique user key).

[0141] The conditional access agent **28** interfaces with the secure device server **44** to:

[0142] (1) Verify the current debit/credit level of the subscriber (e.g., in the cases of PPV or PPT transactions).

[0143] (2) (If required) verify the age of the user associated with the secure device server **44**.

[0144] (3) Forward the signed PPV/PPT transactions to the secure device server **46** for clearing and administration purposes.

[0145] For this interface, the agent **28** acts as the client.

[0146] The conditional access agent **28** interfaces with the conditional access server **36** to query subscriptions. For this interface, the conditional access agent **28** acts as the client.

[0147] The agent **28** also interfaces with the conditional access server **36** to query access criteria and keys and to forward transactional information statistics.

[0148] The conditional access agent **28** interfaces with the conditional access client **48** to send a payment request, receive a transaction (signed payment request) and to pass any result messages (such as service denial based on insufficient debit/credit, regional blackout, etc). For this interface, the conditional access agent **28** acts as the server.

[0149] The conditional access agent **28** interfaces, in one exemplary embodiment, with a media client **49** and the content server **40** using the Real Time Streaming Protocol over TCP/IP (for control interfacing) or UDP/IP (for data interfacing). In this case, the conditional access agent **28** usually acts as a transparent proxy, but will carry out specific actions when the subscriber attempts to access secured content (such as evaluating the access criteria and the subscriber credentials).

[0150] Architecturally, the conditional access agent **28** comprises a number of real-time processes that together provide the required functionality. **FIG. 5** is a block diagram illustrating various processes that constitute the conditional access agent **28**, according to an exemplary embodiment of the present invention. A conditional access agent server **80** communicates with external processes, such as the conditional access server **36**, the secure device server **44** and the conditional access client **48** utilizing a number of interfaces. The conditional access agent server **80** provides a server implementation of a conditional access agent **28** for the client/agent interface. A conditional access client **48** uses this interface to connect to the conditional access agent server **80** to complete a secure XML-based transaction based on access criteria associated with a requested content item. At the end of a successful session, a product key is transmitted to the conditional access client **48**.

[0151] A conditional access agent socket proxy **82** operates as a transparent proxy between a media player **84** and the content server **40** control channel, and is responsible for preventing unauthorized access to the content.

[0152] A conditional access agent transaction manager **86** forwards the transactions from a secure agent **88** to the secure device server **44** and sends the received receipt back to the secure agent **88** to delete the transactions.

[0153] The secure agent **88** is central to the conditional access agent **28**, performs the following functions:

[0154] (1) Keeps track of all secure (user) sessions (session id, user IP address, timers, etc).

[0155] (2) Decrypts and watermarks content in a controlled fashion.

[0156] (3) Maintains Store and Forward transactions.

[0157] (4) Stores the conditional access agent private key, certificate and the conditional access server public key.

[0158] (5) Stores the registered payment gateways and associated Certificate Revocation Lists (CRLs).

[0159] The secure agent **88** may, in one embodiment, be implemented in hardware to increase the level of content and transaction security.

[0160] An exemplary operational scenario involving the conditional access agent **28** will now be described with reference to **FIG. 5**:

[0161] (1) Content destination **22** (e.g., user) selects content.

[0162] The user requests a content description file, such as an ASX file, using a regular browser based on HTTP.

[0163] (2) Trigger conditional access client **48**.

[0164] A browser **90** identifies a unique tag included in the content description file and is configured to forward the URL of the content description file (e.g., the ASX file) to the conditional access client **48**. The client **48** sets up a connection with the conditional access agent server **80**, based on the URL, to start a secure ordering process utilizing regular HTTP messages.

[0165] (3) Retrieving content description file.

[0166] The conditional access agent **28** retrieves the content description file from a Web server **92** using a regular HTTP GET request. From this content description file, the access agent **28** retrieves an access criteria URL.

[0167] (4) Selecting access criteria.

[0168] The conditional access agent **28** retrieves the access criteria using a regular HTTP connection with a proxy (which may have the access criteria cached from a previous session). The conditional access agent **28** registers a new session with the secure agent **88** using the information it has received (subscriber information, access criteria, etc). At session creation, the secure agent **88** verifies:

[0169] (1) That a payment gateway (associated with the user's token) is supported;

[0170] (2) That the serial number is not on the Certificate Revocation List; and

[0171] (3) The (default) host of the secure device server associated with the user's token.

[0172] (5) Retrieving token information.

[0173] The conditional access agent **28** retrieves the secure device information (such as purse information) from the secure device server host to verify purse levels and optionally check age restriction settings.

[0174] (6) Constructing the order request/proposal.

[0175] Based on the user credentials, access criteria and local time, the conditional access agent server **80** constructs an order request (the offer) and sends this to the conditional access client **48** for approval (or decides to refuse access to this particular user). The order request is also registered with the secure agent **88**, which stores this information together with the other session information.

[0176] (7) User signs order.

[0177] The user signs the order and sends the signature to the conditional access agent **28** using a regular HTTP POST message. The conditional access agent **28** forwards the signature to the secure agent **88**. The secure agent **88** will verify all session information (access criteria, user credentials, local time, signature etc.) before granting access.

[0178] (8) Opening of the content 'gate'.

[0179] In a first exemplary embodiment, the content is stored in the clear and the security relies on the socket proxy to block unauthorized access. The socket proxy can query the secure agent **88** for session information. This is not secure as the content is not encrypted and there is no control over which files are streamed.

[0180] In a second embodiment, the content is encrypted and a key will therefore be required by the conditional access client **48** in order to decrypt the content. The socket proxy will now be a RTSP proxy to provide intelligent blocking to implement functionality such as Pay Per Time.

[0181] In case of personalized content security, the secure agent **88** controls the gate since the encrypted content will have to go through the to agent **88** to be decrypted, optionally watermarked, and re-encrypted. This feature is supported for standard compression algorithms, such as MPEG-2, MPEG-4 and MPEG-7.

[0182] The conditional access client **48** receives an OK (assuming a positive authentication and verification) from the conditional access agent **28** using a regular HTTP message, optionally including the session key encrypted under the user public key.

[0183] (9) Transaction forwarding.

[0184] Assuming all went well, the conditional access agent transaction manager **86** forwards the signed order to a secure device server for clearing purposes. The signed order is also sent to the conditional access server **36** for monitoring and statistics.

[0185] Overview—Conditional Access Client **32**

[0186] The conditional access client **32** is executed on a subscriber terminal (e.g., a personal computer (or STB), and is responsible for presenting a user interface to a end user (e.g., a subscriber) and also for interfacing between the secure device **46** and other security sub-systems.

[0187] The conditional access client **48**, in one embodiment, allows external applications (e.g., web clients or plug ins) to manage the secure device **46**. The following management requests pertaining to the secure device **46** are, in one embodiment, supported:

[0188] (1) Changing of a user Personal Identification Number (PIN);

[0189] (2) Querying the status of the secure device **46** (e.g., error not inserted, ready, etc.);

[0190] (3) Publishing the status of the secure device **46**; and

[0191] (4) Querying the secure device serial number and certificate.

[0192] In addition to providing the above described management interface, the conditional access client **48** also operates to assign requests, received from the conditional access agent **28**, and to advise a user accordingly. A signing request that does not require a PIN may be transparent to a subscriber.

[0193] Receipt of a request that requires a PIN to sign the request causes the client **48** to display descriptive information regarding the request (e.g., a movie title) to the subscriber in conjunction with a payment amount. The subscriber is asked to enter a PIN code. If the request relates to a subscription, the client **48** updates a subscription counter on local storage and, in one embodiment, on the secure device **46**. This subscription counter is utilized by the conditional access client **48** to detect that new subscriptions may be available. If the secure device **46** and the conditional access client **48** do not allow for storage, the client **48** may maintain the subscription counter in memory.

[0194] If a subscription request is not successfully completed, the client **48** displays an error message to the user, the error message including an error code and an English-language error description. In one embodiment, the error code may be mapped to a local error string, instead of showing the English-language error description. The error message may also contain a URL, for example, identifying a site for which appropriate subscription may be obtained if the lack of such a subscription results in the error message.

[0195] Overview—Secure Device **46**

[0196] A particular secure device **46** is, in one exemplary embodiment, associated with a particular end-user (e.g., a subscriber). In various exemplary embodiments, the secure device **46** may be a dedicated device specifically for use within the content distribution system **10**; a shared device manufactured for use within a different system (e.g., a banking system), but also leveraged within the content distribution system **10**; or an embedded device that is embedded within a closed media device (e.g., a smart card in a Set Top Box (STB)), or a SIM card in a mobile telephone that is again for use in alternative system, but leveraged within the content distribution system **10**.

[0197] A minimum requirement for the secure device **46**, in one exemplary embodiment, is that its supports digital signing using private/public key technology. Secure devices **46** embedded in close media devices need not adhere to specific requirements, other than providing sufficient security to warrant protection of a user private key. Shared secure devices (e.g., banking cards), in order to be utilized within the content distribution system **10**, are required to adhere to at least a subset of the requirements defined below, this subset of requirements varying depending on the commercial and technical issues. A set of requirements, according to one exemplary embodiment of the present invention, for dedicated secure device are set out below.

[0198] In one embodiment, a dedicated secure device **46** hosts at least two private keys, namely a first private key for encryption and a second private key for signing. The private key for key encryption is available to external applications without user PIN submission. The private key for signing is only available to external applications after PIN submission.

[0199] The secure device **46** may have a co-processor for secure RSA signing with the secure device unique private key.

[0200] Storage within the secure device **46**, in one embodiment, follows the PKCS#11 model and may offer:

[0201] Public storage, available for guests (read), admin (read/write) and user (read/write). This storage is used for public keys (label: "Public key" and "Public key encrypt"), certificates (label: "Certificate", 1500 bytes) and public free format system information (label: "System data", 400 bytes). The free format system information shall contain a valid XML string with various Entriq and other system defined tags.

[0202] Private storage, available for admin (read) and user (read/write). This storage is used for free format user information (label: "User data", 800 bytes). The free format user information shall contain a valid XML string with various Entriq and other defined tags.

[0203] Two-Factor secret, available for user (write/use). This storage is used for the signing private key (label: "Private key").

[0204] One-Factor secret, available for guests (use), admin (use) and user (write/use). This storage is used for the key decryption private key (label: "Private key decrypt").

[0205] The secure device **46** may also be pre-configured with two public/private key pairs, and a certificate signed with the private key of a commerce service provider **42** (or payment gateway). This private key of the payment gateway is hosted by a secure device **46** manufacturer to allow the secure device **46** to be pre-loaded with a valid certificate by delivery into the field. The certificate may, in one embodiment, be X.509 compliant.

[0206] The secure device **46** is furthermore personalized with a fixed PIN code, and may allow a user to set a new PIN after submission of a current user PIN.

[0207] Distributed Secure Agents

[0208] The content distribution system **10**, as described above with reference to FIGS. **1-3**, in one embodiment, proposes that content be encrypted at a content provider **16**, and then distributed to regional content distributors **20** (e.g., broadband Internet Service Providers (ISP's)). Conditional access agents **28** are deployed at these content distributors **20** to evaluate content requests from content destinations operating conditional access clients **32** before delivery of the requested content occurs. Upon appropriate authorization of a request, at the content distributor **20** and under control of the conditional access agent **28**, the requested content is decrypted and at least one association operation performed on the content before it is forwarded to the content destination **22**. The association operation performed at the content distributor **20** may include personal watermarking of the content and/or personal re-encrypting of the content, as will be described in further detail below. With respect to a watermarking operation, the identity of a specific consumer at the content destination **22** is "embedded" in the watermarked content, and the identity of the content consumer can accordingly be detected if the derivative copy of the content is distributed in an unauthorized manner. Accordingly, a content consumer will be discouraged from forwarding copies of the content to others if an unauthorized derivative copy of the content can be traced back to the relevant content consumer utilizing a watermark.

[0209] A content consumer (i.e., requesting user) is, in one embodiment, is verified utilizing a public/private key, and additional certificates, that may be stored on a tamper-proof device (e.g., a smart card or mobile telephone). The certificate contains information that may be utilized to identify a secure device **46** associated with the content consumer. A conditional access agent **28** trusts a number of Certification Authorities (CA) and maintain a Certification Revocation List (CRL) of a Certification Authority to prevent unauthorized access with compromised secure devices **46**.

[0210] The content distribution system **10**, which deploys distributed conditional access agents **28** to represent the interests of content providers **16**, provides a number of advantages. Firstly, moving security functionality, implemented by a conditional access agent **28** in the manner described below, away from an end user device (e.g., a secure device **46**) increases security as this functionality is located outside the reach of hackers at a content destination **22**. Secondly, there are economic benefits, as certain security functionality is removed from the content destination **22**, and is thus more easily managed and maintained.

[0211] A further advantage is that personal re-encryption of content (e.g., utilizing a unique user key) requires that an unauthorized distributor redistribute the entire content, as opposed to just relevant keys.

[0212] Fourthly, personal watermarking of content at a remote conditional access agent **28** makes it difficult for a hacker to impact a watermarking process.

[0213] Fifthly, the use of public/private key technology at a conditional access agent **28**, in the manner described below, makes the solution scalable.

[0214] The content distribution system **10** provides security functionality in a distribution system that "pushes" content to the edges of a network before it is delivered, possibly on demand, to content consumers.

[0215] Finally, the content distribution system **10**, in one embodiment, utilizes secure tokens such as banking, GSM, or pay media smart cards that are already in wide distribution, thus allowing for a large content consumer network.

[0216] FIGS. **6A-6B** show a flow chart illustrating a method **120**, according to an exemplary embodiment of the present invention, of processing a content request received from a content destination **22**. When discussing the method **120**, it is assumed that the requested content is stored at, or redistributed from in the case of live multicasting, a local content server **40** (e.g., video file server or router) that operates in conjunction with a conditional access agent **28**. If a conditional access agent **28** is unavailable, a user will fail to obtain access to the required keys.

[0217] At block **122**, a content consumer, for example utilizing a secure device **46**, issues a request via the network **18** to a content distributor **20**, operating a conditional access agent **28**, to deliver (e.g., via streaming) particular content. In response to the issuance of such a request, a conditional access client **48** executing on a user viewing device (e.g., a PC or set top box) initiates communications with an appropriate conditional access agent **28**, via a network **18**, to obtain the necessary keys. Specifically, at block **122**, as part of the request, the conditional access client **48** communicates a user certificate (e.g., issued by a payment gateway) and optionally a copy-protected device certificate to the conditional access agent **28**.

[0218] At block **124**, the content distributor **20** utilizing the conditional access agent **28**, verifies the received user certificate and optionally the copy-protected device certificate by verifying a challenge communicated by the client **48** to the agent **28** in association with the user device and copy-protected device certificates.

[0219] At block **126**, the content distributor **20** utilizing the conditional access agent **28**, retrieves access criteria and a product key related to the requested content from a content provider **16**. As discussed above, the access criteria and the product key (S_p) are encrypted with a public key of the conditional access agent **28** so that only the specific conditional access agent **28** is able to access the product key.

[0220] The retrieval of the access criteria and product key involves the conditional access agent **28** issuing a request to a conditional access server **36**, responsive to which the server **36** verifies regional constraints associated with the requested content in order to return the appropriate access criteria. Specifically, access criteria may differ per region, and accordingly per conditional access agent **28**.

[0221] The conditional access server **36** secures the access criteria and product key by encrypting the product key with the public key of the conditional access agent **28**, and signs the access criteria, including the encrypted product key, with the conditional access server **36** private key. The product key will thus only be available to the intended conditional access agent **28**.

[0222] At block **128**, the content distributor **20**, and specifically the conditional access agent **28**, verifies the signa-

ture of the access criteria and the product key using a certificate of the content provider **16**, as provided by a trusted third-party. A public key of the trusted third-party would be well known, and embedded within the conditional access agent **28**.

[**0223**] In an alternative embodiment, performance constraints imposed by large live events (e.g., a popular soccer game) may require that the access criteria and the product key are signed utilizing a shared secret key as opposed to the private key of the conditional access private key.

[**0224**] At block **130**, the content distributor **16**, and specifically the conditional access agent **28**, decrypts the received product key associated with the requested content, utilizing a private key of the conditional access agent **28**.

[**0225**] Turning now to **FIG. 6**B, at block **132**, the conditional access agent **28** of the content distributor **20** requests information concerning a secure device **46** of a content consumer from the secure device server **44** of a commerce service provider **42** (e.g., payment gateway). This information concerning the secure device **46** may include a purse value, date of birth, geographic location, etc., and is signed by the commerce service provider **42**. In an alternative embodiment, performance constraints imposed by a large live event may required that the information concerning the secure device **46** be signed utilizing a shared secret key as opposed to a private key of the commerce service provider **42**.

[**0226**] At block **134**, the conditional access agent **28** of the content distributor **20** receives subscription information from the conditional access server **36**, this subscription information having been signed by the content provider server **34**.

[**0227**] At block **136**, utilizing the required information (e.g., the secure device information, access criteria, subscriptions, etc.), the conditional access agent **28** of the content distributor **20** constructs an order request based on a current date and time, signs the order request, and transmits the order request to a conditional access client **48** of the content consumer for acceptance. The conditional access agent **28** utilizes a secure clock to validate the current time against the access criteria settings of the content provider server **34**. The order request may furthermore consist of a number of order options, if applicable (e.g., a pricing of $8.00, or $4.00 for a predetermined amount of time plus $1.00 per minute thereafter).

[**0228**] At block **138**, the conditional access client **48** of the content consumer verifies a signature of the conditional access agent **28** with which the order request has been signed and prompts the user for a PIN to confirm the order. The PIN is utilized to sign the order utilizing the secure device **46**, and a resulting order confirmation (signed) is transmitted back to the conditional access agent **28** of the content distributor **20**.

[**0229**] At block **140**, the conditional access agent **28** verifies the collected data (in a physically secure environment). The collected data includes access criteria, a user signature, a user certificate (signed by the commerce service provider **42**), a copy-protected device certificate, subscriptions, current purse levels, and a user date of birth.

[**0230**] If the request passes the verification process, the conditional access agent **28** then establishes a secure session with the conditional access client **48**, and generates a unique user key (U_k). The unique user key (U_k) is then encrypted with a public key of a copy-protected device associated with the secure device **46**, and communicated to the conditional access client **48** using the secure session. If a copy-protected device is not available, and not required according to the access criteria, the unique user key may be encrypted utilizing a public key of the secure device **46**.

[**0231**] **FIG. 7** is a flowchart illustrating a method **150**, according to an exemplary embodiment of the present invention, of securely delivering content from a content provider **16** to a content consumer via at least one content distributor **20**, where the content distributor **20** performs an association operation (e.g., watermarking or encryption) relating to the content. In the method **150**, the at least one content distributor **20** is uniquely authorized to perform the operation relating to the content.

[**0232**] The method **150** commences at block **152** with the encryption by a content provider **16**, and more specifically a conditional access server **36**, of content with a product key (S_p). This encrypting of the content is automatically performed prior to a scheduled distribution of particular content to multiple content distributors **20** for local distribution to content destinations **22**. Alternatively, the encryption of the content may be performed, in the event of a live event, on the fly and concurrently with provision of the content from the content provider **16** to a content distributor **20**. In yet a further embodiment, the encryption of the content may be performed responsive to receipt of a request, at the content provider **16**, for the specific content from a particular content destination **22**.

[**0233**] Having encrypted specific content with the product key (S_p), the conditional access server **36** of the content provider **16** then encrypts the product key (S_p) with a public key of a specific content distributor **20**. In one embodiment, the public key in which the product key is encrypted is the pubic key of a secure device accessed by a conditional access agent **28**.

[**0234**] The content provider **16** then transits the encrypted content and the encrypted product key to the content distributor **20**.

[**0235**] At block **154**, the content distributor **20**, and more specifically the conditional access agent **28**, operates to decrypt the product key within a secure, tamper proof environment. A tamperproof environment may be provided by tamperproof hardware, such as an nCypher cryptographic hardware card, tamperproof software, or by a regular PC physically protected from unauthorized access.

[**0236**] Having then decrypted the product key, the content distributor **20**, and specifically the conditional access agent **28**, proceeds to decrypt the content utilizing the product key, again within the secure, tamper proof environment facilitated by a secure device.

[**0237**] Having decrypted the content, the conditional access agent **28** then operates to perform an association operation relating to the content. In one exemplary embodiment, this operation constitutes watermarking a copy of the content for distribution to a specific content destination **22**, a specific content consumer, or an identified group of content destinations **22** or content consumers. Watermarking is a mechanism to, in one embodiment, embed arbitrary data into

an audio or video signal, where the embedded data is not easily detectible and/or removable from the resulting signal. "Individual watermarking" is a process of watermarking a signal for a specific content destination **22** (e.g., a content consumer or user) such that the identity of the content consumer can be traced back in case the resulting signal is subject to unauthorized distribution. The watermarking of the content allows a content distributor **20** (or a content provider **16**) to associate a specific copy of the content, uniquely watermarked, with a specific content destination **22**.

[**0238**] Having performed the operation relating to the content, the conditional access agent **28**, again within the secure tamper-proof environment, generates a unique user key (U_k), and re-encrypts the content with this unique user key.

[**0239**] As all operations within block **154** are performed within the secure, tamper-proof environment, it will be appreciated that the interests of the content provider **16** are well protected, and that the product key is not exposed outside the secure environment. Further, only an authorized entity (e.g., a specific conditional access agent **28**) is authorized to reveal the product key within the secure environment as the private key of a secure device of the agent **28** is required to decrypt the product key. In this way, the content provider **16** exercises strict and rigorous control of which entity is able to decrypt the product key.

[**0240**] In one exemplary embodiment, at block **156**, the content distributor **20**, utilizing the conditional access agent **28** and within the secure tamper-proof environment, encrypts the product key with the unique user key (U_k). The content distributor **20** then also encrypts the unique user key with a public key of the content destination **22**. At block **158**, the content distributor **20** transmits the encrypted content, the encrypted product key, and the encrypted unique user key to the content consumer at a content destination **22**.

[**0241**] At block **160**, the content consumer at the content destination **22** decrypts the unique user key utilizing a private key of the secure device **46**, then decrypts the product key utilizing the unique user key, and finally decrypts the watermarked content utilizing the decrypted product key.

[**0242**] As discussed above, the method **150** is particularly advantageous in that it enables a content provider **16** to authorize a specific content distributor **20** to perform an operation relating to the content, and in one embodiment, to contribute to combating authorized distribution. Such operations may include, for example, watermarking or further encryption of the content. In addition to the authorization being specific to a content distributor **20**, the method **150** is also advantageous in that the operation is performed in a secure, tamper-proof environment within which the interests of the content provider **16** are protected and the product key is subject to very limited and controlled exposure.

[**0243**] In this way, a content provider **16** is provided with assurances that distributed secure agents (e.g., conditional access agents **28**) located at various distribution points operate to protect the interests of the content provider **16**. The content provider **16** is thus provided with a degree of security and assurance regarding operations that are performed by content distributors **20** and the content provider **16** is thus likely to entrust distribution of sensitive and very valuable content to such a content distributor **20**.

[**0244**] Further, by performing the operation at block **154** (e.g., watermarking or encrypting) prior to actual delivery of the content to a consumer (i.e., within the network), the risks of piracy are reduced. Upgrades to a secure agent (e.g., the conditional access agent **28**) are also more easily implemented than upgrades to processes at consumer locations.

[**0245**] In conclusion, the method **150** enables an association operation (e.g., a watermarking process) to be distributed to content distributors **20** located at ISPs and therefore closer to content consumers. This is advantageous in that it enables load management. The method **150** also addresses concerns of a content provider **16** regarding security resulting from that, in order to perform certain operations on the content (e.g., a watermarking operation) at a distributor **20**, the content must "be in the clear" in order to properly perform the operation. The method **150** addresses this concern by providing a secure environment in which the operation is performed, and providing the content provider **16** with control over which content distributors **20** are authorized to generate clear content within the secure, tamper-proof environment with the purposes of performing such operations.

[**0246**] Methodology—Variable Key Content Differentiation

[**0247**] So-called "key hook piracy" occurs when an authorized, but fraudulent, user distributes decryption keys, that may be utilized to decrypt content to unauthorized users. Distributing such a single decryption key over networks, such as the Internet, can be done effectively.

[**0248**] **FIGS. 8A and 8B** are block diagrams illustrating, at a high level, a method, according to an exemplary embodiment of the present invention, of combating "key hook piracy". With specific reference to **FIG. 8**A, the present invention proposes encrypting clear content **24** with a relatively large number of session keys **98** to generate encrypted content **26**. In one embodiment, the session keys **98** comprise a sequence of random, time-varying session keys.

[**0249**] **FIG. 8B** illustrates further details regarding the distribution of content and the session keys **98**, according to an exemplary embodiment of the present invention. The content provider **16** is shown to firstly distribute encrypted content **26** (i.e., clear content **24** encrypted with the session keys **98**). In one embodiment, the content provider **16** may distribute the encrypted content **26** directly to a content destination **22**. In an alternative embodiment, the encrypted content **26** may be distributed to a local content server **40** at a content distributor **20**, and cached by the local content server **40** for eventual distribution to a content destination **22**.

[**0250**] The conditional access server **36** at the content provider **16** also operates to encrypt each of the session keys of the sequence of the time-varying session keys with a product key (S_p), and to distribute the encrypted session keys to the conditional access agent **28**, as indicated at **104**. The conditional access server **36** also operates to encrypt the product key (S_p) with the public key of a specific conditional access agent **28**, and then to distribute the encrypted product key to the specific conditional access agent **28**, as indicated

in **FIG. 8B** at **106**. During delivery to a conditional access client **48**, the conditional access agent **28** replaces the session keys encrypted with the product key (S_p) with session keys encrypted with a unique user key (U_k), instead of the product key (S_p). Specifically, prior to deliver to a conditional access client **48**, the conditional access agent **28** decrypts the encrypted product key received from the conditional access server **36** utilizing the private key (or secret key) of the conditional access agent **28**, decrypts the sequence of session keys encrypted with the product key, and then re-encrypts the sequence of session keys utilizing the unique user key (U_k). The re-encrypted sequence of session keys is then distributed from the conditional access agent **28** to the conditional access client **48**, as indicated at **108**. The conditional access agent **28** also distributes the unique user key (U_k) to the conditional access client **48** via a secure authorization channel, as indicated in **FIG. 8B** at **110**.

[**0251**] At the conditional access client **48**, the user key (U_k) is utilized to decrypt the re-encrypted sequence of session keys, the decrypted session keys then in turn being available to decrypt the encrypted content **26**.

[**0252**] It will be appreciated, utilizing the above-described system, the product key (S_p) remains protected from access at a content destination **22** as it is only communicated from the conditional access server **36** to the conditional access agent **28**, and is at no time exposed to the conditional access client **48**. For additional security, the decrypting of the product key is performed at the conditional access agent **28** utilizing a tamperproof device (e.g., a smart card).

[**0253**] The user key (U_k) is by itself useless to users other than the recipient that receives this user key via the secure authorization channel. An authorized user is furthermore discouraged from performing "key hook piracy" in that such an authorized user will be required to send all session keys to an unauthorized user to enable the unauthorized user to access the encrypted content. By generating a large number of session keys, the effort to forward such session keys to unauthorized users approaches the effort of forwarding the entire encrypted content.

[**0254**] FIGS. **9-10** illustrate a number of flow charts providing further details regarding the operations performed at the conditional access server **36**, the conditional access agent **28** and the conditional access client **48**.

[**0255**] **FIG. 9** is a flow chart illustrating a method **300**, according to an exemplary embodiment of the present invention, of encrypting content utilizing a random, time-varying sequence of session keys, so as to combat "key hook piracy". The method **200** commences at block **202** with the generation, at a conditional access server **36**, of a sequence of random, time-varying session keys **98**. As described with reference to **FIG. 2**, the conditional access server **36** may be deployed at a content provider **16**, or at a conditional access service provider **38** that is accessed by a content provider **16**.

[**0256**] At block **204**, specific content is encrypted utilizing the random, time-varying sequence of session keys prior to distribution of the content from a content provider **16**. Content is typically but not necessarily encrypted using symmetric block or stream ciphers such as DES, AES (Rijndael) or RC4.

[**0257**] At block **206**, the conditional access server **36** encrypts each session key with a product key (S_p), the product key being uniquely associated with the relevant content. The session key is typically but not necessarily encrypted using symmetric block ciphers such as DES or AES (Rijndael).

[**0258**] At block **208**, the content provider **16** transmits the encrypted content to a content distributor **20**, for storage on the local content server **40**. Alternatively, the content provider **16** may, in one embodiment, distribute the encrypted content directly to a content destination **22**.

[**0259**] At block **208**, the content provider **16** distributes the encrypted sequence of session keys **98**, as indicated at **104** in **FIG. 8**B, to one or more conditional access agents **28**, deployed at one or more content distributors **20**.

[**0260**] At block **210**, a content distributor **20** stores (or caches) the encrypted content on a local content (or media) server **40** that is associated with a conditional access agent **28**.

[**0261**] It will be appreciated that, upon completion of the method **200**, a content provider **16** has delivered to a content distributor **20** encrypted content that a content distributor **20** is uniquely enabled to access. The content distributor **20** is enabled o perform one or more operations with respect to the encrypted content and/or the sequence of session keys.

[**0262**] **FIG. 9** describes the method **200** whereby a content provider **16** provides encrypted content, and an associated sequence of session keys, to a content distributor **20** for caching at the content distributor **20**. FIGS. **10A-10**B show a flowchart illustrating a method **220**, according to an exemplary embodiment of the present invention, of distributing the cached content from a content distributor **20** to a content destination **22**, responsive to a request for the relevant content from the content destination **22**. Accordingly, the method **220**, in one embodiment, assumes that requested content is cached at a local content server **40** of a content distributor **20**. In an alternative embodiment, the method **220** may be performed where content is broadcast in a near real-time manner (e.g., for a live sporting event).

[**0263**] The method **220** commences at block **222** with the receipt of a request at a conditional access agent **28** of a content distributor **20** for content from a conditional access client **48**. The request includes a user device certificate, issued by a commerce service provider **42** (e.g., a payment gateway) to identify the requesting user. The request also includes a copy-protected device certificate to identify the viewing device and a client challenge that is used to authenticate the agent **28** to the client **48**.

[**0264**] At block **224**, the conditional access agent **28** transmits a request to a conditional access server **36**, associated with a content provider **16** that is an owner or provider of the requested content, for (1) the product key (S_p) in which to decrypt the content and (2) rule information or access criteria, associated with the requested content.

[**0265**] At block **226**, the conditional access server **36** verifies regional constraints associated with the content in order to return the appropriate access criteria. Specifically, access criteria may differ by region, and accordingly per conditional access agent **28**.

[**0266**] At block **228**, the conditional access server **36** encrypts the product key with a public key of a secure device associated with the requesting conditional access agent **28**,

thereby ensuring that only the specific conditional access agent **28** is able to access the product key.

[**0267**] At block **230**, the conditional access server **36** attaches a signature to the rule information, or access criteria, and to the encrypted product key, to thereby cryptographically bind the access criteria with the product key.

[**0268**] At block, **232**, the conditional access agent **28** receives the access criteria and product key, and verifies the signature of the access criteria and the product key utilizing a supplied certificate for the conditional access server **36**, which is signed by a trusted third party. The public key of the trusted third party is well known and, in one embodiment, embedded within the conditional access agent **28**.

[**0269**] At block **234**, the conditional access agent **28** requests and receives from the commerce service provider **42** secured device information (e.g., a purse value, date of birth, regional control information, etc.). This secure device information pertains to the secure device **46** of the content consumer and is signed by the commerce service provider **42**.

[**0270**] At block **236**, the conditional access agent **28** requests and receives subscription information from the conditional access server **36**, this subscription information again being signed by the conditional access server **36**.

[**0271**] At block **238**, the conditional access agent **28** constructs an order request utilizing the acquired information (e.g., the secure device information, access criteria and subscription information), signs the order request, and communicates the order request to the conditional access client **48** associated with the content destination.

[**0272**] At block **240**, the conditional access client **48** verifies the signature of the conditional access agent **28**, confirms the order request, and signs and returns an order confirmation to the conditional access agent **28**.

[**0273**] Turning now to **FIG. 10**B, at block **242**, the conditional access agent **28** verifies the collected data (e.g., access criteria, user signature, user device certificate, copy-protected device certificate, subscriptions, current purse levels and user date of birth) within a physically secure environment implemented at the content distributor **20**.

[**0274**] At block **244**, the conditional access agent **28** creates a secure session with the conditional access client **48**, and generates a unique user key.

[**0275**] At block **246**, the conditional access agent **28** encrypts the unique user key with (1) the public key of a copy-protected device or (2) a public key of the secure device **46** associated with a content consumer at the content destination **22**.

[**0276**] At block **248**, the conditional access agent **28** processes the encrypted session keys **98** associated with the content, the sequence of encrypted session keys **98** having been received at the conditional access agent **28** at block **208** of the method **200** described above with reference to **FIG. 9**. Specifically, at block **248**, each session key, as encrypted with the product key, is decrypted and then re-encrypted with the unique user key. As will be recalled, the product key was encrypted with the public key of the conditional access agent **28**, and communicated to the conditional access agent **28** at block **228** shown in **FIG. 10A**. The personal re-encryption of the sequence of session keys utilizing the unique user key is useful in that it requires a "hacker" to redistribute the entire sequence of session keys.

[**0277**] At block **250**, the conditional access agent **28** transmits the sequence of session keys encrypted with the unique user key to the conditional access client **48** at the content destination **22**.

[**0278**] At block **252**, the conditional access client **48** decrypts the sequence of session keys, utilizing the unique user key, which was received by the conditional access client **48** at block **256** from the agent **28**.

[**0279**] At block **254**, the conditional access client **48** then decrypts the encrypted content utilizing the decrypted session keys.

[**0280**] Conditional Access Service Provider **38**

[**0281**] According to a further aspect of the present invention, and as described briefly above with reference to **FIG. 2, a** pay media conditional access service provider **38** operates to provide "outsourced" content security function to multiple content providers **16**. Utilization of security functions provided by such a service provider **38** may be attractive to content providers **16**, as the setup, maintenance and operational costs associated with providing such security functions in-house (e.g., by operating an in-house conditional access server **36**) may be high for a single content provide **16***r*.

[**0282**] The content security functions, according to an exemplary embodiment of the present invention, that may be provided by a conditional access service provider **38** include the secure storage and distribution of content encryption keys and associated access criteria (or rules), and also the provision of a secure and scalable key distribution system that is able to manage a potentially large number of content consumers.

[**0283**] **FIG. 11** is a block diagram illustrating a pay media conditional access service provider **38**, according to an exemplary embodiment of the present invention, and shows an interaction of the conditional access service provider **38** with multiple content providers **16**, as well as one of multiple conditional access agents **28**. At a high level, content is encrypted at either the content provider **16** or alternatively at the service provider **38**, after which a key and access criteria (or rules) are registered with the conditional access service provider **38**. The service provider **38** thereafter assumes responsibility for management of user authentication and key distribution, in the manner described below. In this way, conditional access services are provided by the service provider **38**, instead of the traditional approach that requires a substantial investment from each content provider **16**.

[**0284**] As stated above, a number of advantages flow from having multiple content providers **16** share a common key storage and distribution infrastructure (e.g., the service provider **38**). However, a number of challenges face such a service provider **38**. Specifically, a number of security issues require attention to secure product key creation, storage and distribution. Exemplary security issues that are addressed by the present invention include:

[**0285**] 1. Random product key generation: It will be appreciated that a product key generated by content

provider **16**, in one embodiment, is random (i.e., approaching a true random key) and created in an environment trusted by the content provider **16**.

[**0286**] 2. A product key is protected from access by a pay media conditional access provider **38** while stored in a database maintained by the service provider **38**.

[**0287**] 3. A product key is protected during transport between the service provider **38** and the content provider **16**.

[**0288**] 4. An association of a product key with access criteria (or rules) is restricted to authorized users only.

[**0289**] The specific methodologies by which the above issues are addressed are described in further detail below with reference to the flow charts shown in FIGS. **12-15**.

[**0290**] Referring again to **FIG. 11** by way of architectural description, a pay media conditional access service provider **38** is shown to deploy an ASP conditional access server **37**, which cooperates with a server secure device **39**. The conditional access server **37** operates to perform substantially the same functions as a conditional access server **36** that may be deployed by a content provider **16**, and is described above. The server secure device **39** is utilized by the conditional access server **37** to provide a secure, tamper-proof environment within which to perform certain operations, as will be described in further detail below.

[**0291**] A conditional access agent **28** is also shown to deploy an agent secure device **29**, which is similarly used by the agent **28** to provide a secure, tamper-proof environment in which to perform certain operations. Each content provider **16** also deploys a provider secure device **17** to again provide a secure, tamper-proof environment for certain sensitive operations.

[**0292**] **FIG. 12** is a flow chart illustrating a high level method **280**, according to an exemplary embodiment of the present invention, whereby a conditional access service provider **38** provides security functions to multiple parties within a content distribution system **10**.

[**0293**] At block **282**, a product key, and optionally the access criteria (or rules), are communicated from a content provider **16** to the service provider **38**, and specifically to the server secure device **39** of the service provider **38**. The product key and the access criteria are then encrypted, within the server secure device **39** with a storage key, and stored by the conditional access server **37**.

[**0294**] At block **284**, a secret agent key is communicated from a conditional access agent **28** to the secure server device **39** of the service provider **38**, encrypted with a storage key within the server secure device **39**, and stored at the service provider **38**.

[**0295**] At block **286**, a content provider **16** distributes content, encrypted with the product key, to a local content server **40** of a content distributor **20**. As described above, the local content server **40** operates to cache the encrypted content, in one exemplary embodiment, for regional distribution. As also illustrated in **FIG. 11**, the local content server **40** operates in conjunction with a conditional access agent **28** deployed by content distributor **20**.

[**0296**] Returning to **FIG. 12**, at block **288**, responsive to a request from a conditional access agent **28**, the product key, encrypted by the service provider **38** with the secret agent key, is communicated to the conditional access agent **28** from the ASP conditional access server **37**.

[**0297**] At block **290**, the conditional access agent **28** decrypts, and optionally performs a personalization (or association) operation with respect to the content so that the content is uniquely associated with a particular content destination **22** (e.g., a particular user). This personalization (or association) operation may comprise a watermarking operation to watermark the content and thereby generate a derivative of the original content that is unique to the relevant content destination **22**.

[**0298**] The personalization (or association) operation may also include re-encrypting the content with a unique user key, as described above.

[**0299**] At block **292**, the conditional access agent **28**, in conjunction with the local content server **40**, distributes the content to a content destination **22** (e.g., a user).

[**0300**] **FIG. 13** is a flow chart illustrating a method **300**, according to an exemplary embodiment of the present invention, of generating a product key at a content provider **16** and storing the product key at a conditional access service provider **38**.

[**0301**] At block **302**, a product key is created at the content provider **16** utilizing a random number generator **19** and optionally a provider secure device **17**, to thereby provide a high degree of randomness for the product key. It would be appreciated that a high degree of randomness is desirable to provide an increased level of security for the product key.

[**0302**] At block **304**, the product key is encrypted utilizing a public key of the server secure device **39** of the pay media conditional access service provider **38**.

[**0303**] At block **306**, rule information (e.g., access criteria) associated with the content encrypted utilizing the product key is identified. The encrypted product key is then optionally combined with this rule information by signing both the product key and the rule information utilizing a private key of the content provider **16**.

[**0304**] At block **308**, a content provider certificate is attached to the encrypted product key (and optionally the combined rule information), and the encrypted product key, rule information, and provider certificate are communicated to the ASP conditional access server **37** operated by the service provider **38**.

[**0305**] Turning now to activities performed at the service provider **38**, at block **310**, the ASP conditional access server **37** verifies the content provider certificate and signature, and submits the encrypted product key to the server secure device **39**.

[**0306**] At block **312**, within the secure environment provided by the server secure device **39**, the encrypted product key is decrypted utilizing the private key of the secure server device **39**. It will be recalled that the product key was, at block **314**, encrypted utilizing the public key of the server secure device **39**.

[0307] At block **314**, the product key is re-encrypted with a symmetric storage key, and stored within a server database. Furthermore, within the database **41**, the encrypted product key (now encrypted with the storage key) is logically linked to the content provider **16** that submitted the product key.

[0308] In the event that rule information was submitted in conjunction with the product key, this rule information is similarly stored within the database **41**, and also linked with the content provider and product key within the database **41**.

[0309] By only revealing the product key in the clear within the secure environment provided by the server secure device **39**, and encrypting the product key with a symmetric storage key prior to storing the product key within the database **41**, it will be appreciated that access to the product key by the pay media conditional access service provider **38** is effectively prevented. The storage key is managed by the operator that hosts the conditional access server **37** (such as Sentriq) and is cycled on a regular basis for new product keys. The storage key must be securely managed since it used to protect many product keys that in turn can decrypt many content items.

[0310] **FIG. 14** is a flowchart depicting a method **320**, according to an exemplary embodiment of the present invention, of distributing an agent secret key from a conditional access agent **28** to the ASP conditional access server **37**.

[0311] The method **320** commences at block **322**, with the receipt at the conditional access agent **28** of the public key of the server secure device **39**.

[0312] At block **324**, the agent **28** encrypts an agent secret key utilizing the public key of the server secure device **39**. The agent secret key is used to secure communication between the server **37** and the agent **28**

[0313] At block **326**, the agent **28** signs the encrypted agent secret key utilizing the agent secure device **29**, and the encrypted agent secret key is transmitted to the ASP conditional access server **37**, together with an agent certificate of the agent **28**.

[0314] Turning now to activities performed by the ASP conditional access server **37**, at block **328**, the conditional access server **37** verifies the agent certificate and signature and, at block **330**, submits the encrypted agent secret key to the server secure device **39**.

[0315] At block **332**, the server secure device **39** operates to decrypt the agent key within a secure environment, and then re-encrypt the agent secret key utilizing the symmetric storage key. The re-encrypted agent key (encrypted utilizing the storage key) is stored within the database **41**, and logically linked to an associated conditional access agent **28**.

[0316] **FIG. 15** is a flow chart illustrating a method **340**, according to an exemplary embodiment of the present invention, of product key distribution from the conditional access service provider **38** to a conditional access agent **28**.

[0317] At block **342**, a conditional access agent **28** issues a request for a product key to the ASP conditional access server **37**. This request may be for license generation purposes, or for the purpose of decrypting content, stored at local content server **40** in order to perform an association operation on clear content, or merely to distribute the clear content to a content destination **22**.

[0318] At block **344**, the server **37** transmits the encrypted product key (encrypted with the symmetric storage key) and the encrypted agent secret key (again encrypted with the symmetric storage key) to the server secure device **39**.

[0319] At block **340**, the server secure device **39**, within a secure environment, decrypts both the product and agent secret keys, so that these keys are only in the clear within the secure environment.

[0320] At block **348**, the server secure device **39** then encrypts the product key with the agent secret key.

[0321] At block **350**, the server secure device **39** returns the encrypted product key (encrypted with the agent secret key) to the ASP conditional access server **37**. At block **352**, the ASP conditional access server **37** transmits the encrypted product key to the requesting conditional access agent **28**.

[0322] At block **354**, the conditional access agent **28** receives the encrypted product key, decrypts the encrypted product key utilizing the agent secure device **29**.

[0323] Having now revealed the product key within a secure environment, the conditional access agent **28** may perform any one of a number of operations. In one embodiment, the conditional access agent **28** may, within the secure environment provided by the agent secure device **29**, re-encrypted product key with a secure device key of a secure device **46** at a content destination **22**, and communicate the re-encrypted product key (encrypted with a key for the secure device **46**) to a content destination **22**. Alternatively, the conditional access agent **28** that utilized the decrypted product key to generate clear content then performs one or more operations relating to the clear content. For example, the clear content may be communicated directly to content destination **22**, may be watermarked and/or may be re-encrypted with a unique user key, before delivery to a content destination **22**.

[0324] As described above, a content provider **16** may optionally submit rules (i.e., access criteria) to the pay media conditional access service provider **38** for controlling access to a particular content. To this end, the ASP conditional access server **37** may require a valid digital signature of the rule information, generated utilizing the provider secure device **17** operated by the content provider **16**. The signed rule information may also include a recent time stamp in order to prevent replay. In an alternative embodiment, the content provider **16** may include a challenge (generated by the ASP conditional access server **37**), in a rule change request.

[0325] In one embodiment, the pay media conditional access service provider **38** may also permit entities other than the content provider **16** to change or specify rule information, associated with a particular product key, as stored within the database **41**. Specifically, the service provider **38** may provide the ability to configure the rights of certain content providers **16**. This functionality allows a content provider $\mathbf{16}_a$ to modify rule information associated with a product key that was registered by another content provider $\mathbf{16}_n$. Further, this functionality allows a content provider $\mathbf{16}_a$ to introduce alternative rules for a product key that was previously registered by a further content provider

16_n. The pay media conditional access provider **38**, in one embodiment, provides the following functions:

[**0326**] (1) Registration of a content item, and an associated product key, by a specific content provider **16**.

[**0327**] (2) Linking of a product key, associated with a particular content item, to additional, new rule information, and modification of the rule information for product keys associated with a particular content provider.

[**0328**] (3) Registration of a new content item utilizing the same product key that is already associated with a further, already registered content item. However, the new content item, while being registered with an already registered product key, may be registered with different rule information.

[**0329**] In summary, the rights of each content provider **16** are stored and managed by the pay media conditional access provider **38**. A content provider **16** may be authorized to register content items for one or more content providers (e.g., content providers 16_a, 16_b and 16_c). The same content provider 16_a may be authorized to update rules for content providers 16_b and 16_d. Finally, for example, content provider 16_b may be authorized to create new content items, utilizing a pre-registered product key of a content item registered by further content provider 16_c and 16_f.

[**0330**] Separating User Authentication and Content Security

[**0331**] As described above, current hardware-based content security solutions are based on combining (1) user authentication and (2) content security into a single module (e.g., a smart card). However, this lack of differentiation between copy-protected device authentication and specific user authentication can be undesirable in certain circumstances. For example, it does not necessarily allow user mobility across multiple-protected devices (e.g., copy-protected personal computers or STBs). Accordingly, a specific user is typically only able to access restricted content via a specific copy-protected device purchased by that user, and into which user authentication information is integrated. For example, an authorized user is currently not able to utilize a STB, owned by a friend or relative that the user may be visiting, to view content to which the relevant user is a subscriber.

[**0332**] According to one aspect of the present invention, this problem may be addressed by logically separating user authentication functionality from content security (i.e., copy-protected device authentication) functionality. To this end **FIG. 16** is a block diagram illustrating a system **400**, according to an exemplary embodiment of the present invention, that provides a product key to access content upon receipt and verification of two separate certificates, namely a first user device certificate for user authentication and a second secure copy-protected device certificate for content security authentication. More specifically, the system **400** includes a secure conditional access agent **28** that communicates, as described above, with a conditional access client **48**. The conditional access client **48**, in turn, accesses a secure user authentication device **402** (e.g., a PKI token, smart card or SIM card) and a secure copy-protected device **408** (e.g., a software based tamperproof decoder or hardware based set top box decoder).

[**0333**] The secure user authentication device **402** is, it will be appreciated, associated with a user, and is thus typically portable and carried on the person of a user. The secure copy-protected device **408**, on the other hand, is associated with a device within which the ability to copy a content is disabled (or restricted). Accordingly, the secure copy-protected device **408** is typically embedded within, or integrally formed with, a viewing device (e.g., a PC or STB).

[**0334**] Each of the secure user authentication and secure copy-protected devices **402** and **408** is shown to include a respective device certificate **404** and **410**, and a device public key **408** and **412**.

[**0335**] **FIG. 17** is a flow chart illustrating a method **420**, according to an exemplary embodiment of the present invention, to secure content for distribution via a network **18** by employing separate user device and copy-protected device authentication processes to protect content from unauthorized access. At a high level, the method **420** includes associating a user device authentication process with content, and associating a separate, copy-protected device authentication process with the content.

[**0336**] Referring to **FIG. 17**, the method **420** commences at block **422** with the receipt by the conditional access client **48** of a signature and certificate **404** associated with the secure user authentication device **402**. The conditional access client **48** then forwards the user device signature and certificate **404** to the secure conditional access agent **28**. At block **424**, the conditional access client **48** receives a signature and certificate **410** associated with the copy-protected device **408** and transmits the copy-protected device signature and certificate **410** to the conditional access agent **28**.

[**0337**] At block **426**, the conditional access agent **28** verifies the secure user device signature and certificate **404** in a first user device authentication process. At block **428**, the conditional access agent **28** verifies user credentials against access criteria (or rule information) associated with content requested by the conditional access client **48**. The requested content, it will be appreciated, is presented to an authenticated user via the authenticated copy-protected device **408**.

[**0338**] At block **430**, the conditional access agent **28** verifies the certificate **410** of the secure copy-protected device **408**. At block **432**, assuming the verification operations is performed at blocks **426-430** are successfully completed, the conditional access agent **28** proceeds to encrypt the requested content with a public key of the copy-protected device **408**. At block **434**, the conditional access agent **28** authorizes transmission of the encrypted content to the conditional access client **48** for delivery to the secure copy-protected device **408**.

[**0339**] At block **436**, the conditional access client **48** initiates decryption of the requested content wherein a secure environment provided by the copy-protected device utilizing a private key (not shown) of the copy-protected device **408**.

[**0340**] In conclusion, it will be noted that two separate and distinct authentication processes are performed at blocks **426-428** and **430**. Further, it will be noted that each of these separate authentication processes verify separate and distinct user device and copy-protected device information (e.g., separate device certificates). By separating the authen-

tication processes, an authorized user, in one exemplary use scenario, is enabled to utilize a copy-protected device of a third party to request and view content, for which that particular user is authorized. For example, the user authentication device may comprise a smart card, PKI token, SIM card or the like, that may be inserted into a personal computer, STB, PDA, cell phone or the like of a third party, thus enabling the authorized user to request content via a third party's copy-protected device **408**.

[**0341**] Associating a License with a Particular User

[**0342**] Content licenses, such as those implemented by Microsoft Windows Media DRM technology and Intel ISIS are typically linked in a cryptographic manner to a specific player (e.g., a user computer). However, such content licenses are not tied to a particular user, and thus can be utilized by any one with access to the relevant player. This situation is undesirable both from a content owner (license issuer) as well as a user (license holder) viewpoint.

[**0343**] At a high level, according to one aspect of the present invention, a method of associating a license with a particular user includes encrypt a product key, to be included within a license to particular content, with both the public key **412** of the copy-protected device and the public key **406** of a user authentication device. According to one aspect of the present invention, a method of securing content for distribution to a network would include the operations of method **420** described above with reference to **FIG. 17**, but differ in that at block **432**, the conditional access agent **28** would encrypt the product key with both the public keys **406** and **412**, as opposed to only the public key **412**.

[**0344**] **FIG. 18** is a flow chart illustrating a method **450**, according to an exemplary embodiment of the present invention, of communicating a product key, encrypted with the public keys of both a copy-protected device and a user authentication device to a copy-protected device and a user authentication device. In one embodiment, the product key is firstly encrypted utilizing the public key of the copy-protected device **408**, and then again encrypted with the public key **406** of the user authentication device **402**. In this embodiment, it will be appreciated that, in order for the copy-protected device **408** to access the product key, the copy-protected device **408** requires the user authentication device **402** to first decrypt the product key. In order to prevent replay attacks, the copy-protected device **108** may append a challenge to the encrypted key when requesting the user to decrypt the product key.

[**0345**] Turning specifically now to the method **450** illustrated in **FIG. 18**, at block **452**, a user, via integrated or separate user-authentication and copy-protected devices **402** and **408**, selects particular encrypted content for viewing via the copy-protected device **408**.

[**0346**] At block **454**, the copy-protected device **408** loads a content license, associated with the requested content and required to decrypt the content. **FIG. 19** is a diagrammatic representation of an exemplary content license **470** that may be loaded at block **454**. As illustrated, the content license **470** includes a machine identification identifying the copy-protected device **408**, content identification identifying the requested content, a twice-encrypted product key **472**, license usage restrictions, a signature of the license issuer, and a certificate of the license issuer.

[**0347**] Returning to **FIG. 18**, at block **456**, the copy-protected device **408** detects that the product key **472** is encrypted with the public key **406** of the user authentication device **402**. This is indicated in the license usage restrictions. At block **458**, the copy-protected device **408** appends a random challenge to the encrypted product key **472** and, at block **460**, requests the user authentication device **402** to decrypt the encrypted product key, and also issues a challenge to the user authentication device **402** utilizing the private key (not shown) of the user authentication device **402**.

[**0348**] At block **462**, the copy-protected device **408** re-encrypts a result returned from the user authentication device **402** with the public key **406** of the device **402** to thereby verify the challenge.

[**0349**] At decision block **464**, a determination is made as to whether the challenge was successfully verified or not. If so, at block **466**, the copy-protected device **408** decrypts the encrypted product key utilizing the private key of the copy-protected device **408** to reveal the product key. At block **468**, the copy-protected device **408** then utilizes the revealed product key to decrypt the requested content.

[**0350**] The above-described aspect of the present invention may be utilized in one exemplary use scenario to secure highly confidential data that is delivered to, and stored on, a copy-protected device **408** (e.g., a user's computer). Depending upon the user's authentication mechanism, a user may be required to utilize a hardware PKI token to authenticate the user to the copy-protected device **408** prior to obtaining access to the encrypted content.

[**0351**] License Generation Utilizing Symmetric Keys

[**0352**] As noted above, the signing of content licenses utilizing a private key operation is computationally expensive when a large number of simultaneous transactions are required (e.g., when the content is live, broadcast event). Additionally, the operational costs of managing private keys, and associated certification authorities may be high.

[**0353**] With a view to addressing the above-identified problems, the present invention proposes, in one exemplary embodiment, signing a license utilizing a secret symmetric key. In one embodiment, the secret symmetric key comprises a product key that encrypts content to which the license pertains. In an alternative embodiment, the symmetric key constitutes a key that is utilized to encrypt a product key that is in turn utilized to encrypt the content.

[**0354**] Signing a content license utilizing a symmetric key is advantageous in that the computational costs of a symmetric key operation are substantially less than the computational costs of a private key operation. In this manner, the present invention allows a content distribution infrastructure to generate an increased number of licenses in a potentially shorter time period. A further benefit is that the additional costs of managing a public key infrastructure are substantially avoided, as in the embodiment where the symmetric key constitutes a product key, this product key is known to the license issuer anyway as a license will typically include such a products key.

[**0355**] Signing licenses with a symmetric key (e.g., the product key) rather than a private key allows anyone with

access to the product key to create licenses, rather than restricting the creation of licenses to certified license issuers.

[0356] **FIG. 20** is a flow chart illustrating a method **480**, according to an exemplary embodiment of the present invention, of signing a content license utilizing a symmetric key.

[0357] At block **482**, a content license is generated at a content provider **16**. At block **484**, the content provider **16** then signs the content license utilizing a symmetric key. In one embodiment, the symmetric key comprises a product key with which content, associated with the content license, is encrypted. In an alternative embodiment, the symmetric key is a symmetric key that the content provider **16** utilized to encrypt a product key that was utilized to encrypt the associated content.

[0358] At block **486**, the content provider **16** proceeds to encrypt the content, to which the content license pertains, with the symmetric product key.

[0359] At block **488**, the content provider **16** then distributes the content, and the associated content license, to a recipient (e.g., to a content distributor **20**, or directly to a content destination **22**).

[0360] At block **490**, the content provider **16** distributes the symmetric product key to a recipient (e.g., a content distributor **20** or a content destination **22**). The distribution of the symmetric key may be according to any one of the methodologies discussed. For example, the symmetric key may be encrypted utilizing the public key of a copy-protected device **408** associated with the recipient.

[0361] At block **492**, the recipient verifies the content license utilizing the symmetric key. For example, the recipient may decrypt the product key utilizing a private key for a copy-protected device **408** associated with the recipient, and then utilize the decrypted product key to verify the content license.

[0362] Having verified the content license at block **494**, the recipients may then optionally decrypt the content utilizing the symmetric product key.

[0363] **FIG. 21** is a diagrammatic representation of a content license **496**, according to an exemplary embodiment of the present invention. As illustrated, the content license **496** is signed utilizing digital signature **498** in the form of a symmetric key. In one embodiment, the symmetric key is a product key with which associated content is encrypted. The content license **496** is shown to include substantially the same information as the content license **470** shown in **FIG. 19**, but differs in that the license **496** is signed by the product key, as opposed to being signed by a license issuer.

[0364] **FIG. 22** is a flowchart providing further details regarding a method, according to an exemplary embodiment of the present invention, of generating the digital signature **498** for a license **496** utilizing a symmetric key (e.g., a product key).

[0365] As illustrated in **FIG. 22**, the license **496** is subject to a hash function **510** to generate a hash result **512**. The hash result **512** and a symmetric key in the exemplary form of a product key **500** provide input to a signature function **514** that generates a digital signature **498** for the license **496** from these two inputs.

[0366] **FIG. 23** is a flowchart illustrating a method, according to an exemplary embodiment of the present invention, of verifying a content license **496**, utilizing a digital signature **498** generated utilizing a symmetric key (e.g., a product key).

[0367] The license **496** is again subject to the hash function **510** to regenerate the hash result **512**. A verification function **516** receives the three inputs, namely the hash result **512**, the symmetric key **500** and the digital signature **498**. As the digital signature **498** was generated utilizing the symmetric key **500**, the verification function **516** is able to verify the content license **496** utilizing these three inputs.

[0368] Geographic Control of Content Distribution

[0369] It is desirable to provide a content provider **16** with geographic control over the distribution of content for a number of reasons. For example, a content provider **16** may wish to distribute a live event over the Internet worldwide, but need to block certain countries (e.g., or reasons due to exclusive broadcasting rights having been sold to broadcasters in those regions). According to one aspect of the present invention, there is provided a method and system to provide content providers **16** with secure geographic distribution control.

[0370] At a high level, the present invention proposes that content providers **16** encrypt content before distribution of a network (e.g., the Internet). In order to view the encrypted content, a content destination **22** will need to retrieve the encrypted content and the associated encryption key (or keys). Prior to communicating such encryption keys and content, according to one aspect of the present invention, a user and/or a copy-protected device are authenticated with secure hardware devices (e.g., PKI-enabled hardware devices such as smart cards or USB e Tokens). Once a user or copy-protected device has been identified, a number of geographic location checks are then performed against geographic access criteria to determine whether or not to release content to a requesting content destination **22**.

[0371] **FIG. 24** is a flowchart illustrating a method **550**, according to an exemplary embodiment of the present invention, of distributing content via a network (e.g., the Internet) in a geographically controlled manner. The method **550** commences at block **552** with the receipt of a request from a content requestor located at a content destination **22** for delivery of content via a network to the content destination **22**. The request may, for example, be received at conditional access agent **28**, as illustrated in **FIG. 2** from a conditional access client **48**, located at the content destination **22**. As described above with reference to **FIG. 16**, the request to the conditional access agent **18** may include both a user authentication device certificate **404** and a copy-protected device certificate **410**.

[0372] At block **554**, the conditional access agent **28**, in the manner described above, retrieves access criteria associated with the request content from an appropriate conditional access server **36** operated via a content provider **16**, or by a service provider **38**. The retrieved access criteria includes geographic access criteria specifying geographic regions (e.g., countries, states, provinces, counties, towns, municipal areas, etc.) and access conditions associated with those geographic regions. For example, the geographic access criteria may prohibit, or alternatively authorize, dis-

tribution of the associated content to a specific geographic region or regions. For the purposes of the present specification the term "geographic location" shall be taken to include any geographic location identifiable by any criteria, including national, state, municipal, city, town, economic, demographic, historical, or a socio-economic criteria.

[0373] At block **554**, the conditional access agent **28** also commences a content requestor or authentication process that, in one embodiment, includes performing a lookup to determine the physical delivery address of the copy-protected device **408** utilizing the copy-protected device certificate. In an alternative embodiment, at block **554**, the conditional access agent **28** may perform a lookup of the delivery address of the user authentication device **402**, utilizing information contained in the user device certificate **440**. In yet a further embodiment, the conditional access agent **28** may lookup the delivery addresses for both the copy-protected and the user authentication devices. The delivery address information may be included in the certificate, or stored in the network as information linked with the user and/or device.

[0374] At block **556**, the conditional access agent **28** determines the source IP address of the request received from the content requestor at the content destination **22**, and attempts to map the source IP address to a geographic location. To this end, the conditional access agent **28** may have access to an external geographic location service, such as those offered by Quova, Inc., or Digital Envoy, Inc. that provide sophisticated IP geographic location services.

[0375] At block **558**, the conditional access agent **28** examines the geographic access criteria, included in the access criteria retrieved from the conditional access server **36**.

[0376] At decision block **560**, the conditional access agent **28** makes a determination as to whether the delivery address (or addresses) determined at block **554** and/or the geographic location associated with the source IP address determined at block **556** comply with the geographic access criteria. Following a positive determination at decision block **560**, the conditional access agent **28** releases the requested content, stored on the local content server **40** for delivery to the content destination **22** of the content requestor. On the other hand, following a negative determination at block **560**, delivery of the requested content to the content requestor at the content destination **22** is blocked.

[0377] It will be appreciated that the above-described methodology may find broad application in digital rights management and exercising geographic control over content distribution. For example, a content provider **16** (or distributor **20**) may distribute USB eTokens in the U.S.A. for immigrants that wish to access sports events broadcast over the Internet from a country of origin. The sports clubs (e.g., the content providers **16**) can, utilizing the above method **550**, verify that a content requestor is located at a content destination **22** in the U.S.A. by verifying the content requestor's digital certificate and signature, for distributing encrypted content and in appropriate key.

[0378] By checking that both the delivery address of a user authentication or copy-protected device, and the source IP address of a content request are located within an authorized geographic location, the present invention seeks to prevent a user from utilizing a secure device, properly authorized, within an unauthorized geographic location. Specifically, the IP source address check decreases the ability of a fraudulent user to access content from a "blocked" geographic location. Content and keys are only delivered if a user has access to a user authentication and/or copy-protected device that is not officially distributed to any blocked region, and the source IP address of the content requestor is not mapped to any blocked region.

[0379] Dynamic Selection of Payment Gateways

[0380] Traditional Internet-based payment solutions may require a user to provide financial information to companies which they do not have a trust relationship, and also to provide financial information to a wide range of content providers **16** from which the user may wish to obtain content. This potentially creates barriers to entry for a user.

[0381] According to one aspect of the present invention, these problems are addressed by having a content provider **16**, and more specifically a conditional access server **36**, order a list of payment gateways through which the content provider **16** will accept payment such that a preferred payment gateway is highly ranked in the ordered list, and a least preferred payment gateway is ranked low within the ordered list.

[0382] Upon receiving a user request for access to content of a particular content provider **16** at a conditional access agent **28**, the conditional access agent **28** may reorder (or re-rank) the list of accepted gateways to leverage existing trust relationships between the content requestor and, for example, a content distributor **20** hosting the conditional access agent **28**. In one embodiment, the list of payment gateways presented by the conditional access agent **28** to the content requestor is dictated by the content provider **16**. The content distributor **20** is not authorized to add payment gateways to this list, but merely to reorder the list to reflect an existing trust relationship that the content requestor may have established. In an alternative embodiment, the content distributor **20** may modify a list of payment gateways, by adding or subtracting payment gateways to that list. Specifically, the content distributor **20** may have established relationships with additional payment gateways that have no relationship with the content provider **16**. In this case, the content distributor **20** may include such further additional payment gateways in the list presented to the content requestor. In this case, the content distributor **20** will assume responsibility for the appropriate transfer of the funds to the content provider **16**.

[0383] Dealing more specifically with payment gateways, as stated above, a commerce service provider **42**, such as that illustrated in **FIG. 2**, may act as a payment gateway with respect to a content provider **16**, a content distributor **20** and/or a content destination **22**. For the purposes of the present invention, the term "payment gateway" will be taken to include any party that acquires transactions from a further party, and processes such transactions through a financial system (e.g., a banking or credit card system). Merely for example, a payment gateway may be used to link a banking network with the Internet. A payment gateway may furthermore link a number of banking systems together (e.g., Visa, MasterCard and American Express), and may typically not be vendor or bank specific, although occasionally this is the case. In providing an interface between a merchant (e.g., a

content provider **16** or a content distributor **20**) and a bank's payment processing system, a payment gateway may operate to translate messages into other formats (e.g., VisaNet) that are utilized for authorization and settlement of merchant transactions. A payment gateway typically acquires a transaction, certifies it and routes it. Many payment gateways are based on Secure Electronic Transaction (ACT) technology.

[**0384**] **FIG. 25** is a flowchart illustrating a method **600**, according to an exemplary embodiment of the present invention, to dynamically present a payment gateway to a content requestor (e.g., as a content destination **22**).

[**0385**] The method **600** commences at block **602** at a content provider **16**, which performs a ranking operation to generate an ordered list of payment gateways according to relationships established between the content provider **16** and such payment gateways. More specifically, as discussed above, a conditional access server **36** may utilize a number of tables to support functionally supplied to a content provider **16**. Such tables include, as discussed above, the table PaymentGateway that is populated with records for each of a number of payment gateways with which a content provider **16** has established relationships. The table PaymentGateway, in one embodiment of the present invention, is provided with an additional "rank" field that indicates the ranking within an ordered list of payment gateways attributed to the relevant payment gateway by a content provider **16**. The ranking operation performed at block **602** includes the identification of a preferred payment gateway that is identified by the content provider **16** as being it's first choice of a payment gateway through which to receive payment for access to content that it provides.

[**0386**] At block **604**, each of a number of content distributors **20** may optionally rank a number of payment gateways according to relationships established between each of the respective content distributors **20** and the payment gateways, and again each identify a preferred payment gateway. In the simplest implementation, the content distributor **20** itself may implement a payment gateway, and not have established any relationships with third party gateways. For example, Excite@Home may operate both as a content distributor **20**, and a payment gateway. In this case, Excite@Home may simply identify an "Excite@Home wallet" as the preferred payment gateway. In a more complex implementation, a content distributor **20** may have established relationships with a number of payment gateways, and in this case may maintain a table similar to the table PaymentGateway of the conditional access server **36**.

[**0387**] At blocks **606**, responsive to receipt of a content request at a content distributor **20**, and more specifically a conditional access agent **28**, the conditional access agent **28** requests certain information as described, from a conditional access server **36** of a content provider **16**. According to the present invention, the information communicated from the conditional access server **36** to the conditional access agent **28** as part of this communication includes a list of payment gateways accepted by the content provide **16**. This list of payment gateways includes the ordered ranking of payment gateways and the identification of the provider-preferred payment gateway. At block **606**, the conditional access agent **28** also makes a determination as to whether a ranked list of payment gateways (or at least a preferred payment gateway) has been specified by the content distributor **20**.

[**0388**] Following a positive determination at block **608** (i.e., the content distributor **20** has identified a preferred payment gateway), at block **610**, the conditional access agent **28** causes the preferred payment gateway of the content distributor **20** to be presented to the content requestor, if appropriate. More specifically, in one embodiment, the conditional access agent **28** may reorder the list of provider-accepted payment gateways to reflect relationships established between the content distributor **20** and appropriate payment gateways, or to reflect trust relationships established between the content requestor and the content distributor **20** (e.g., in the case of Excite@Home) or another third-party payment gateway. This reordered list of provider-accepted gateways is then communicated from the conditional access agent **28** to the conditional access client **48** for presentation to the content requestor (e.g., via a browser).

[**0389**] In an alternative embodiment, at block **610**, the conditional access agent **28** may modify the list of accepted payment gateways to include payment gateways with which the content distributor **20** has relationships, but with which the content provider **16** does not have relationships. In this way, the list of accepted payment gateways may be expanded or reduced, depending on relationships established by the content distributor **20**. In this case, the modified list of accepted payment gateways will again be communicated to the conditional access client **48** for presentation to the content requestor, with a preferred payment gateway being identified for presentation to the content requestor as such.

[**0390**] On the other hand, following a negative determination at decision block **608** (i.e., the content distributor **20** has no preference with respect to payment gateways), the conditional access agent **28** forwards the provider-accepted list of payment gateways, unaltered, to the conditional access client **48** for presentation to the content requestor. In this case, the preferred payment gateway, as identified by the content provider **16**, will be presented to the content requestor as such.

[**0391**] In one embodiment of the present invention, the actual preferred payment gateway that is presented to the content requestor at block **610** or **612** is presented as a default payment gateway. In one embodiment, this may involve presenting only the preferred payment gateway to the content requestor, without presenting other options. In an alternative embodiment, a list of payment gateways, with the preferred (or default) payment gateway being selected in the absence of selection of the content requestor to the contrary, may be presented to the content requestor.

[**0392**] **FIG. 26** illustrates an exemplary sequence of user interfaces that may be presented by a client (e.g., a browser), executing on a client device (e.g., a personal computer) at a content destination **22**, and also hosting a conditional access client **48**. The sequence of interfaces includes a first content selection interface **620**, according to an exemplary embodiment of the present invention, which allows a content requestor to select particular content. To this end, the exemplary content selection interface **620** presents titles for each a number of content items, and a check box adjacent to each of these titles that the user may check to indicate selection of a content item.

[**0393**] A payment selection interface **622**, according to an exemplary embodiment, presents a number of payment gateways, in the exemplary form of "wallets" from which

the content requestor may select a wallet via which payment for one or more content items may be made. As illustrated in the exemplary payment selection interface **622**, Excite@Home wallet is indicated as a preferred, default payment gateway as a radio button displayed adjacent a listing for this wallet is pre-selected. Additional wallets are listed below the Excite@Home wallet in an order determined by the content distributor **20**, or in the absence of any preference by the content distributor **20**, by the content provider **16**.

[**0394**] The methodology as described above enables the following illustrative exemplary scenario. The National Basketball Association (NBA) may distribute a live basketball game over a network (e.g., the Internet). The NBA, as a content provider **16**, may accept payment utilizing a NBA wallet, an Excite@Home wallet, and an English "British Telecom" wallet, and may designate the NBA wallet as a preferred, default wallet.

[**0395**] When an Excite@Home user requests access to the game via a conditional access agent **28** deployed by Excite@Home, operating as a content distributor **20**, the relevant conditional access agent **28** may, in the manner described above, reorder a list of payment gateways, accepted by the NBA and received from a conditional access server **36** operated by the NBA, to reflect the Excite@Home wallet as the preferred and default wallet. Accordingly, the Excite@Home wallet would in this case be presented to the end user as the default wallet.

[**0396**] Alternatively, when a British Telcom user requests access to the game via a conditional access agent **28** deployed by British Telcom in its capacity as a content distributor **20**, the preferred and default payment gateway may be switched to the British Telcom wallet by the relevant conditional access agent **28**.

[**0397**] Finally, if a user requests content to the game outside the Excite@Home and British Telcom networks, the payment gateway communicated to the content requestor as the default and preferred payment gateway (in the absence of a reconfiguring by the appropriate content distributor **20**) will be the NBA wallet, as specified by the NBA in its capacity as a content provider **16**.

[**0398**] This enables a content provider **16** (e.g., the NBA) to sell access to a basketball game with minimal user inconvenience for Excite@Home and British Telcom users, as these users are not required to establish an account with the NBA. Such users will then be spared the inconvenience of having to re-supply confidential information to the NBA.

[**0399**] With a view to implementing the method **600** described above, both a content provider **16** and a content distributor **20** may maintain an ordered (or ranked) list of payment gateways. To enable the content distributor **20** to determine which payment gateways should be presented to a user, the ranked list of payment gateways may be communicated from the content provider **16** to the content distributor **20**. Similarly, in one embodiment, the content distributor **20** may maintain a similarly ranked list of payment gateways.

[**0400**] In one embodiment, the content distributor **20** may present both the first and second ranked lists of payment gateways to a user for selection. In a further embodiment, the content distributor **20** may operate to only present payment gateways within the lists that correspond. In other words, only payment gateways that appear on the list of the content distributor **20** are presented to the requestor, with other payment gateways that do not appear on the list maintained by the content distributor **20** being filtered out.

[**0401**] In yet a further embodiment, the content distributor **20** may reorder payment gateways communicated in the ranked list of the content provider **16** to reflect relationships established between the content distributor **20** and at least one payment gateway.

[**0402**] In yet a further embodiment of the present invention, a content distributor **20** may be authorized to only present payment gateways that are included in the ranked list generated by the content provider **16**, and communicated to the content distributor **20**. Nonetheless, in this embodiment, the content distributor **20** is presented with the option of re-ordering, or only displaying selected payment gateways, in accordance with relationships that may have been established between the content distributor **20** and the payment gateways, or relationships that may have been established between the end user and the payment gateways.

[**0403**] Computer System

[**0404**] **FIG. 27** is a diagrammatic representation of a machine in the form of computer system **700** within which software, in the form of a series of machine-readable instructions, for performing any one of the methods discussed above may be executed. The computer system **700** includes a processor **702**, a main memory **704** and a static memory **706**, which communicate via a bus **708**. The computer system **700** is further shown to include a video display unit **710** (e.g., a liquid crystal display (LCD) or a cathode ray tube (CRT)). The computer system **700** also includes an alphanumeric input device **712** (e.g., a keyboard), a cursor control device **714** (e.g., a mouse), a disk drive unit **716**, a signal generation device **718** (e.g., a speaker) and a network interface device **720**. The disk drive unit **716** accommodates a machine-readable medium **722** on which software **724** embodying any one of the methods described above is stored. The software **724** is shown to also reside, completely or at least partially, within the main memory **704** and/or within the processor **702**. The software **724** may furthermore be transmitted or received by the network interface device **720**. For the purposes of the present specification, the term "machine-readable medium" shall be taken to include any medium that is capable of storing or encoding a sequence of instructions for execution by a machine, such as the computer system **700**, and that causes the machine to perform the methods of the present invention. The term "machine-readable medium" shall be taken to include, but not be limited to, solid-state memories, optical and magnetic disks, and carrier wave signals.

[**0405**] If written in a programming language conforming to a recognized standard, the software **724** can be executed on a variety of hardware platforms and for interface to a variety of operating systems. In addition, the present invention is not described with reference to any particular programming language. It will be appreciated that a variety of programming languages may be used to implement the teachings of the invention as described herein. Furthermore, it is common in the art to speak of software, in one form or another (e.g., program, procedure, process, application, module, logic . . .), as taking an action or causing a result.

Such expressions are merely a shorthand way of saying that execution of the software by a machine, such as the computer system **700**, to perform an action or a produce a result.

[**0406**] Thus, methods and systems to distribute content via a network utilizing distributed conditional access agents and secure agents, and to perform digital rights management (DRM) have been described. Although the present invention has been described with reference to specific exemplary embodiments, it will be evident that various modifications and changes may be made to these embodiments without departing from the broader spirit and scope of the invention. Accordingly, the specification and drawings are to be regarded in an illustrative rather than a restrictive sense.

What is claimed is:

1. A method digitally to sign a content license associated with content, the method including:

generating the content license at a content provider; and

signing the content license utilizing a symmetric key.

2. The method of claim 1 wherein the symmetric key encrypts the content.

3. The method of claim 1 wherein the symmetric key encrypts a product key that in turn encrypts the content.

4. The method of claim 1 wherein the content license includes any one of a group of license items including a machine identifier, a content identifier, usage restrictions and user certificate information.

5. The method of claim 1 including transmitting the content license in conjunction with the content to a recipient.

6. The method of claim 5 including transmitting the symmetric key to the recipient.

7. The method of claim 6 wherein the symmetric key is encrypted with a public key of recipient.

8. The method of claim 1 including verifying the signing of the content license at a recipient utilizing the symmetric key.

9. The method of claim 1 wherein the signing of the content license includes generating a hash result of the content license utilizing a hash function and transforming the hash result into a digital signature utilizing the symmetric key.

10. The method of claim 9 wherein verification of the signing of the content license includes generating a further hash result of the content license utilizing the hash function, and determining whether the hash result corresponds to the further hash result.

11. The method of claim 8 wherein the verification of the signing of the content license includes determining a digital signature created utilizing the symmetric key.

12. A system to digitally sign a content license associated with content, the system including a content provider to generate the content, and to sign the content license utilizing a symmetric key.

13. The system of claim 12 wherein the symmetric key encrypts the content.

14. The system of claim 12 wherein the symmetric key encrypts a product key that in turn encrypts the content.

15. The system of claim 12 wherein the content provider includes any one of a group of license items including a machine identifier, a content identifier, usage restrictions and user certificate information.

16. The system of claim 12 wherein the content provider transmits the content license in conjunction with the content to a recipient.

17. The system of claim 16 wherein the content provider transmits the symmetric key to the recipient.

18. The system of claim 17 wherein the recipient encrypts the symmetric key with a public key.

19. The system of claim 12 wherein a recipient utilizes the symmetric key to verify the signing of the content license.

20. The system of claim 19 wherein the content provider signs the content license and generates a hash result of the content license utilizing a hash function and transforms the hash result into a digital signature utilizing the symmetric key.

21. The system of claim 20 wherein verification of the signing of the content license includes generating a further hash result of the content license utilizing the hash function, and determining whether the hash result corresponds to the further hash result.

22. The system of claim 19 wherein the recipient verifies the signing of the content license by determining a digital signature created utilizing the symmetric key.

23. A system to digitally sign a content license associated with content, the system including content provider means to generate the content, and to sign the content license utilizing a symmetric key.

24. A machine-readable medium storing a sequence of instructions that, when executed by a machine, cause the machine to perform a method to digitally sign a content license associated with content, the method including:

generating the content license at a content provider; and

signing the content license utilizing a symmetric key.

25. A method to distribute content via a network in a geographically controlled manner, the method including:

receiving a request from a content requestor for delivery of content to the content requestor via the network;

performing a content requestor authorization process, the content requestor authorization process including determining a geographic location associated with the content requestor, determining geographic access criteria associated with the content, and determining whether the geographic location complies with the geographic access criteria; and

releasing the content for delivery to the content requestor if the content location complies with the geographic access criteria.

26. The method of claim 25 wherein the determining of the geographic location includes determining a delivery address to which a copy-protected device associated with the content requestor was delivered.

27. The method of claim 26 including releasing the content for deliver to the content requestor if the delivery address complies with the geographic access criteria.

28. The method of claim 25 wherein the determining of the geographic location includes determining a delivery address to which a user authentication device associated with the content requestor was delivered.

29. The method of claim 28 wherein the content is released for delivery to the content requestor if the delivery address complies with the geographic access criteria.

30. The method of claim 25 wherein the determining of the geographic location includes mapping a source network address of the request for the delivery of the content to a request source location.

31. The method of claim 30 including releasing the content for delivery if the request source location complies with the geographic access criteria.

32. The method of claim 26 wherein the copy-protected device comprises a set-top box.

33. The method of claim 26 wherein the copy-protected device comprises a PKI-enabled hardware device.

34. The method of claim 28 wherein the user authentication device comprises an electronic token.

35. The method of claim 28 wherein the user authentication device comprises a smart card.

36. A system to distribute content via a network in a geographically controlled manner, the system including:

a content requestor; and

a content distributor coupled to the content requestor via the network, to receive a request from a content requestor for delivery of content to the content requestor via the network, to perform a content requestor authorization process, the content requestor authorization process including determining a geographic location associated with the content requestor, determining geographic access criteria associated with the content, and determining whether the geographic location complies with the geographic access criteria, and to release the content for delivery to the content requestor if the content location complies with the geographic access criteria.

37. The system of claim 36 wherein the determining of the geographic location includes determining a delivery address to which a copy-protected device associated with the content requestor was delivered.

38. The system of claim 37 including releasing the content for deliver to the content requestor if the delivery address complies with the geographic access criteria.

39. The system of claim 36 wherein the determining of the geographic location includes determining a delivery address to which a user authentication device associated with the content requestor was delivered.

40. The system of claim 39 wherein the content distributor releases the content for delivery to the content requestor if the delivery address complies with the geographic access criteria.

41. The system of claim 36 wherein the determining of the geographic location includes mapping a source network address of the request for the delivery of the content to a request source location.

42. The system of claim 41 wherein the content distributor releases the content for delivery if the request source location complies with the geographic access criteria.

43. The system of claim 37 wherein the copy-protected device comprises a set-top box.

44. The system of claim 37 wherein the copy-protected device comprises a PKI-enabled hardware device.

45. The system of claim 39 wherein the user authentication device comprises an electronic token.

46. The system of claim 39 wherein the user authentication device comprises a smart card.

47. A system to distribute content via a network in a geographically controlled manner, the system including:

content requestor means; and

content distributor means coupled to the content requestor means via the network, to receive a request from content requestor means for delivery of content to the content requestor means via the network, to perform a content requestor authorization process, the content requestor authorization process including determining a geographic location associated with the content requestor means, determining geographic access criteria associated with the content, and determining whether the geographic location complies with the geographic access criteria, and to release the content for delivery to the content requestor means if the content location complies with the geographic access criteria.

48. A machine-readable medium storing a sequence of instructions that, when executed by a machine, cause the machine to perform a method to distribute content via a network in a geographically controlled manner, the method including:

receiving a request from a content requestor for delivery of content to the content requestor via the network;

performing a content requestor authorization process, the content requestor authorization process including determining a geographic location associated with the content requestor, determining geographic access criteria associated with the content, and determining whether the geographic location complies with the geographic access criteria; and

releasing the content for delivery to the content requestor if the content location complies with the geographic access criteria.

* * * * *