Trials@uspto.gov
Tel: 571-272-7822

Paper 34
Entered: April 4, 2019

UNITED STATES PATENT AND TRADEMARK OFFICE

BEFORE THE PATENT TRIAL AND APPEAL BOARD

UNIFIED PATENTS INC.
Petitioner,

v.

FALL LINE PATENTS, LLC
Patent Owner.

Case IPR2018-00043
Patent 9,454,748 B2

Before MICHELLE N. WORMMEESTER, SHEILA F. McSHANE, and JOHN R. KENNY, *Administrative Patent Judges.*

KENNY, *Administrative Patent Judge*.

DECISION
Final Written Decision
*35 U.S.C. § 318(a)*



Instacart, Ex. 1020

# I. INTRODUCTION

This *inter partes* review, instituted pursuant to 35 U.S.C. § 314, challenges the patentability of claims 16–19, 21, and 22 ("challenged claims") of U.S. Patent No. 9,454,748 B2 (Ex. 1001, "challenged patent," "the '748 patent"), owned by Fall Lines Patents, LLC ("Patent Owner"). We have jurisdiction under 35 U.S.C. § 6. This Final Written Decision is issued pursuant to 35 U.S.C. § 318(a) and 37 C.F.R. § 42.73.

For the reasons discussed below, we determine that Petitioner has proven by a preponderance of the evidence that every challenged claim is unpatentable.

## *A. Procedural Background*

Unified Patents, Inc. ("Petitioner") filed a Petition for *inter partes* review of the challenged claims on one ground. Paper 2 ("Pet."). Patent Owner filed a Preliminary Response. Paper 5 ("Prelim. Resp."). We instituted an *inter partes* review of all challenged claims. Paper 6 ("Institution Decision," "Inst. Dec."), 47. Patent Owner filed a Patent Owner Response to the Petition (Paper 9, "PO Resp."), to which Petitioner filed a Reply (Paper 10, "Pet. Reply").

A final oral hearing was held on December 14, 2018, and a transcript of the hearing is included in the record. Paper 20 ("Hr'g Tr."). At the hearing, Patent Owner argued that we should consider its challenge to the Petitioner's identification of its real party in interest, even though Patent Owner did not present that challenge in its Patent Owner Response. Hr'g Tr. 19:22–21:8.

After the hearing, we authorized post-hearing briefing regarding (i) Petitioner's identification of its real party in interest and (ii) whether Patent

Owner timely challenged that identification. Paper 19, 1–5. Patent Owner filed a Motion Regarding Real Party in Interest (Paper 21, "PO RPI Motion"), to which Petitioner filed an Opposition, opposing consideration of Patent Owner's real-party-in-interest challenge. Paper 23 ("Pet. Opp. Consid."). Petitioner also filed a Reply, in which Petitioner responded to Patent Owner's real-party-in-interest arguments. Paper 22 ("Pet. RPI Reply"). Petitioner presented a declaration from Mr. Kevin Jakel, Petitioner's CEO, (Ex. 1026) with its RPI Reply. Patent Owner cross-examined Mr. Jakel and filed observations regarding that cross examination. Paper 30 ("RPI Obs."). Petitioner responded to those observations. Paper 31. ("RPI Obs. Resp.").

*B. Related Proceedings*

The parties indicate that the challenged patent is or has been involved in the following civil actions in the United States District Court for the Eastern District of Texas:

| Case Caption | Number |
|---|---|
| *Fall Line Patents, LLC v. American Airlines Group, Inc.* | 6:17-cv-00202 |
| *Fall Line Patents, LLC v. Cinemark Holdings, Inc.* | 6:17-cv-00203 |
| *Fall Line Patents, LLC v. Grubhub Holdings, Inc.* | 6:17-cv-00204 |
| *Fall Line Patents, LLC v. Choice Hotels Int'l, Inc.* | 6:17-cv-00407 |
| *Fall Line Patents, LLC v. Uber Technologies, Inc.* | 6:17-cv-00408 |

Pet. 1; Paper 4, 2–3.

According to Petitioner and Patent Owner, Civil Action No. 6:17-cv-00204 has been terminated/was dismissed. Pet. 1; Paper 4, 2–3. Patent Owner states that Civil Action No. 6:17-cv-00202 was also dismissed. Paper 4, 2–3. And Petitioner notes claims 1–14 of U.S. Patent No. 7,822,816, of which the challenged patent is a continuation, were the subject

of ex parte reexamination Serial No. 90/012,829 and IPR2014-00140. Pet. 1–2.

*C. Overview of the Challenged Patent*

The challenged patent is directed to collecting data from a remote computing device, such as a handheld computing device, by creating and delivering a questionnaire to the remote computing device, executing the questionnaire on the remote computing device, and transmitting responses to a server via a network. Ex. 1001, [57].

Figure 1 of the challenged patent is reproduced below:

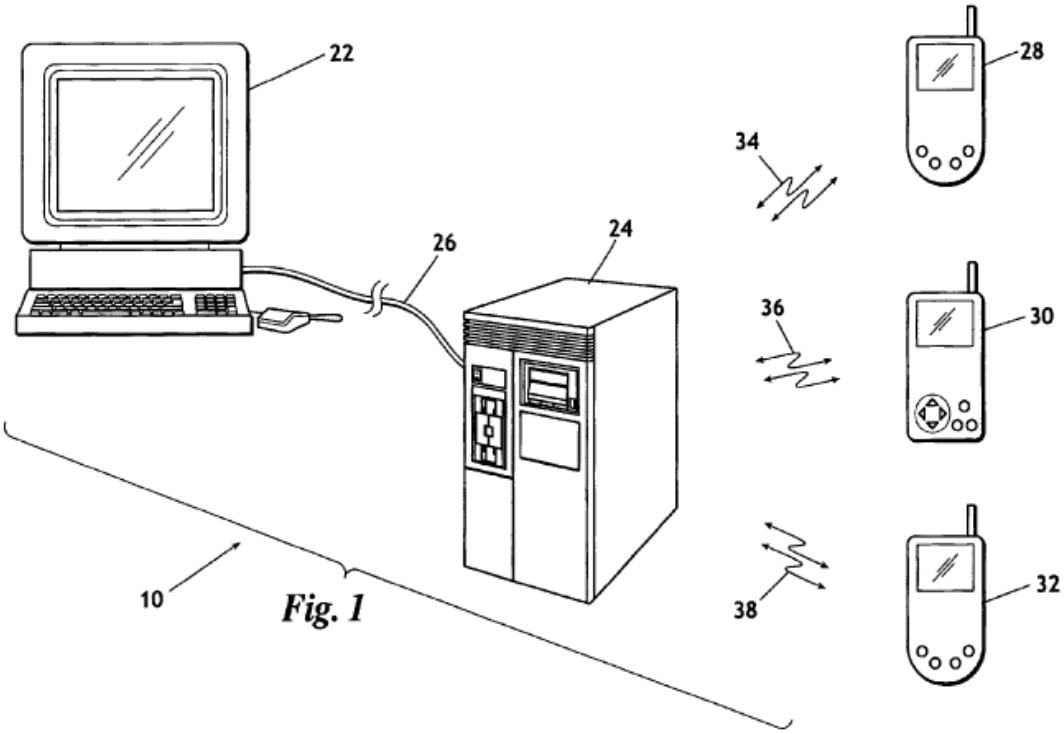


Figure 1 is a diagram of the challenged patent's system for data management. Ex. 1001, 6:57, 7:13–23. System 10 includes server 24; handheld computers 28, 30, and 32, which are operated remotely from server 24; and computer 22, which provides for administration of the system and

reviewing data collected by the system. *Id.* at 7:13–23, Fig. 1. Server 24 is connected to computer 22 via the Internet 26, a local area network, or a private wide area network. *Id.* at 7:24–28, Fig. 1. Server 24 is connected to handheld computers 28, 30, and 32 via connections 34, 36, and 38, respectively. *Id.* at 7:24–26. Connections 34, 36, and 38 are loose network connections, meaning that handheld computers 28, 30, and 32 and server 24 are tolerant of intermittent network connections. *Id.* at 7:59–62. Computer 22 is used for administrating system 10 and for reviewing data collected by the system. *Id.* at 7:21–23.

Figure 2 of the challenged patent is reproduced below:

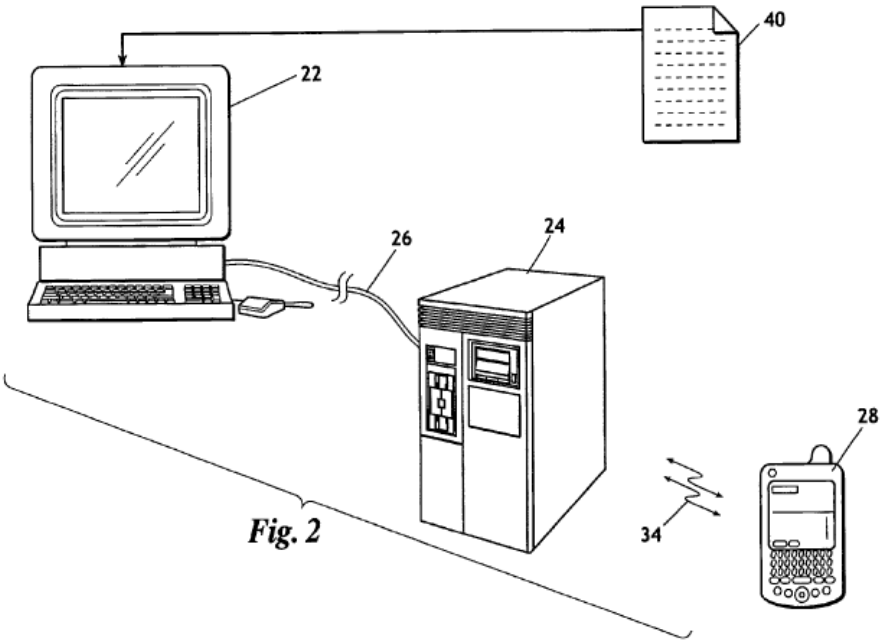


Figure 2 is a diagram of system 10 as it is used for form creation. Ex. 1001, 6:58–59; 8:11–17. Computer 22 has an interface that allows a user to create and distribute a form to handheld devices using computer 22. *Id.* at 8:38–50. As the client enters questions and selects response types, server 24 builds a

stack of questions and responses, and assigns indices, or tokens, which point to each question or response. *Id.* at 8:53–56, 9:3–6. Each token can correspond to a logical, mathematical, or branching operation. *Id.* at 8:56–59, 9:3–6. When questionnaire (40) is complete, server 24 sends the stack of questions and defined responses to the handheld devices (e.g., handheld computer 28). *Id.* at 9:3–6. System 10 can incrementally update the questionnaire on the handheld devices. *Id.* at 9:14–18.

For example, system 10 can track mystery shoppers at restaurant chains. Ex. 1001, 10:37–43. System 10 can track the time it takes a mystery shopper to go through a drive through window. *Id.* at 10:41–43. When the mystery shopper enters a parking lot for a franchise, a handheld device with a GPS receiver can identify the franchise. *Id.* at 10:55–59. The device can also record the amount of time it takes for the shopper to go through a drive through line. *Id.* at 10:55–11:21.

*D. Illustrative Claims*

Petitioner challenges claims 16–19, 21, and 22 of the challenged patent, of which, claims 16, 19, and 21 are independent and reproduced below:

> [16.0][1] 16. A method for managing data comprising the steps of:
>
> [16.1] (a) establishing communications between a handheld computing device and an originating computer, said handheld device having at least a capability to determine a current location thereof;

[1] Petitioner labels individual phrases in claims 16, 19, and 21 as shown in brackets. For clarity, we use the bracketed labels for the phrases in these claims.

[16.2.1] (b) receiving within said handheld computing device a transmission of a tokenized questionnaire
[16.2.2] including at least one question requesting GPS coordinates,
[16.2.3] said tokenized questionnaire comprising a plurality of device independent tokens;

[16.3] (c) ending said communications between said handheld computing device and said originating computer;

[16.4] (d) after said communications has been terminated, when said handheld computing device is at said particular location

[16.5] (dl) executing at least a portion of said plurality of tokens comprising said questionnaire on said handheld computing device to collect at least said current location of said handheld computing device; and;

[16.6] (d2) storing within said handheld computing device said current location;

[16.7] (d3) automatically entering the GPS coordinates into said questionnaire;

[16.8] (e) establishing communications between said handheld computing device and a recipient computer; and,

[16.9] (f) transmitting at least one value representative of said stored current location to said recipient computer.

[19.0] 19. A method for managing data comprising the steps of:

[19.1] (a) establishing communications between a handheld computing device and an originating computer wherein said handheld computing device has a GPS integral thereto;

[19.2.1] (b) receiving within said handheld computing device a transmission of a tokenized questionnaire from said originating computer,
[19.2.2] said tokenized questionnaire including at least one question requesting location identifying information,
[19.2.3] said tokenized questionnaire comprising a plurality of device independent tokens;

[19.3] (c) ending said communications between said handheld computing device and said originating computer;

[19.4] (d) after said communications has been ended,

[19.5] (dl) executing at least a portion of said plurality of tokens comprising said questionnaire on said handheld computing device to collect at least one response from a first user, and,

[19.6] (d2) storing within said computing device said at least one response from the first user

[19.7] (d3) using said GPS to automatically obtain said location identifying information in response to said at least one question that requests location identifying information;

[19.8] (e) establishing communications between said handheld computing device and a recipient computer;

[19.9] (f) transmitting a value representative of each of said at least one response stored within said handheld computing device to said recipient computer; and,

[19.10] (g) after receipt of said transmission of step (f), transmitting a notice of said received value representative of each of said at least one response to a second user.

[21.0] 21. A method for managing data comprising the steps of:

[21.1] (a) within a central computer, accessing at least one user data item stored in a recipient computer, wherein said at least one data item is obtained via the steps of:

[21.2] (1) establishing communications between a handheld computing device and an originating computer wherein said handheld computing device has a GPS integral thereto;

[21.3.1] (2) receiving within said handheld computing device a transmission of a tokenized questionnaire,
[21.3.2] including at least one question requesting GPS coordinates and at least one additional question,
[21.3.3] said tokenized questionnaire comprising a plurality of device independent tokens;

[21.4] (3) ending said communications between said handheld computing device and said originating computer;

[21.5] (4) after said communications has been ended,

[21.6] (i) executing at least a portion of said plurality of tokens comprising said questionnaire on said handheld computing device,

[21.7] (ii) automatically entering the GPS coordinates into said questionnaire:

[21.8] (iii) presenting said at least one additional question to a user;

[21.9] (iv) receiving at least one response from the user to each of said presented at least one additional question,

[21.10] (v) storing at least one value representative of said GPS coordinates and said at least one response within said handheld computing device;

[21.11] (5) establishing a communications link between said handheld computing device and a recipient computer;

[21.12] (6) transmitting said stored at least one value representative of said GPS coordinates and said at least one response stored within said handheld computing device to said recipient computer; and,

[21.13] (7) storing within said recipient computer any of said transmitted GPS coordinates and said at least one value representative of said at least one response, thereby creating said at least one user data item stored in said recipient computer; and,

[21.14] (b) forming a visually perceptible report from any of said at least one stored user data item.

*E. Asserted Prior Art and the Parties' Declarations*

Petitioner relies on the following references:[2]

| Reference | | Issue/Copyright Date | Exhibit |
|---|---|---|---|
| Chan | U.S. Patent No. 6,381,603 B1 | Apr. 30, 2002 | Ex. 1010 |
| Darnell | HTML 4 Unleashed[3] | 1998 | Ex. 1007 |
| Kari | U.S. Patent No. 6,154,745 | Nov. 28, 2000 | Ex. 1006 |
| Todd | U.S. Patent No. 6,380,928 B1 | Apr. 30, 2002 | Ex. 1009 |

Petitioner also relies on declarations from its expert, Dr. A.L. Narasimha Reddy (Ex. 1005); Mr. David Bader (Ex. 1008); and Mr. Kevin

[2]The challenged patent is a continuation of Serial No. 10/643,516, filed Aug. 19, 2003, now U.S. Patent No. 7,822,816. The challenged patent also claims the benefit of Provisional Application No. 60/404,491, filed Aug. 19, 2002.

[3] Rick Darnell, HTML 4 UNLEASHED, 3–29, 231–253 (1998).

Jakel (Ex. 1026). Patent Owner relies on a declaration from its expert, Dr. John C. Hale (Ex. 2006).

### *F. Asserted Ground*

Petitioner asserts that claims 16–19, 21, and 22 of the challenged patent are unpatentable under 35 U.S.C. § 103(a) as obvious over Kari, Darnell, Todd, and Chan. Pet. 5.

### *G. Real Parties in Interest*

Petitioner identifies Unified Patents, Inc. as its sole real party in interest in this proceeding. Pet. 1. Patent Owner identifies Fall Line Patents, LLC as its sole real party in interest. Paper 4, 2.

## II. DISCUSSION

### *A. Identification of Petitioner's Real Party in Interest*

The statute governing *inter partes* review proceedings sets forth certain requirements for a petition for *inter partes* review, including that "the petition identif[y] all real parties in interest." 35 U.S.C. § 312(a); *see also* 37 C.F.R. § 42.8(b)(1) (requirement to identify real parties in interest in mandatory notices). As discussed above, in accordance with 35 U.S.C. § 312(a)(2) and 37 C.F.R. § 42.8(b)(1), Petitioner identifies Unified Patents Inc. as its sole real party in interest and "certifies that no other party exercised control or could exercise control over Unified's participation in this proceeding, the filing of this petition, or the conduct of any ensuing trial." Pet. 1.

In its Preliminary Response, Patent Owner challenged Petitioner's identification of its real party in interest. Prelim. Resp. 28–33. In the Institution Decision, we determined that at that stage of the proceeding there was insufficient evidence to reasonably bring into question the accuracy of

the Petitioner's identification. Inst. Dec. 11. After institution, Patent Owner sought authorization to file a motion for discovery regarding Petitioner's real party in interest. Paper 8. But at the time, Patent Owner requested to wait for a district court ruling before filing its motion. *Id*. We instructed Patent Owner to seek authorization for its motion when it was prepared to file the motion (*id*.), but Patent Owner never sought such authorization. *See* Hr'g Tr. 44:15–46:2. Patent Owner did not present a challenge regarding Petitioner's real party in interest in its Patent Owner Response, nor did it mention the issue in that paper. The issue of Petitioner's real party in interest was subsequently brought to the Board's attention when the parties submitted their oral hearing demonstratives and Petitioner's Objections to Patent Owner's Demonstratives, which were submitted a few days before the December 14, 2018 Hearing. Papers 16–18. At the oral hearing, Patent Owner argued that we should consider a challenge to the Petitioner's identification of its real party of in interest. Hr'g Tr. 19:22–21:8.

Under the circumstances, we first address whether Patent Owner timely challenged Petitioner's identification of its real party in interest. Then, we address whether, if we were to consider Patent Owner's challenge, we would accept Petitioner's identification of its real party in interest.

*1. Timeliness of Patent Owner's Challenge*

Patent Owner argues its challenge to Petitioner's real party in interest was timely for three reasons. First, Patent Owner argues that it did not need to present this challenge in its Patent Owner Response because the challenge does not involve an issue of patentability, and the Scheduling Order (Paper 7) merely cautions Patent Owner that arguments of patentability would be waived if not raised in the Patent Owner Response. PO RPI Motion 1.

Second, Patent Owner asserts that it could raise its challenge at any time—even at oral argument—because challenges regarding real parties in interest cannot be waived. *Id.* at 1–2 (citing *Motorola Mobility LLC v. Intellectual Ventures II LLC*, IPR2014-00504, Paper 12 at 8 (PTAB Sept. 10, 2014)). Third, at oral argument, Patent Owner asserts that *Applications in Internet Time, LLC v. RPX Corp.*, 897 F.3d 1336 (Fed. Cir. 2018), and *Worlds Inc. v. Bungie, Inc.*, 903 F.3d 1237 (Fed. Cir. 2018), which issued after the Patent Owner filed its Patent Owner Response, were intervening changes in the interpretation of the law that justified raising the issue of real party in interest after the filing of the Patent Owner Response. Hr'g Tr. 20:26–21:5.

Petitioner responds, arguing that Patent Owner waived its right to challenge Petitioner's identification of its real party in interest by not raising that challenge in the Patent Owner Response. Pet. Opp. Consid. 1–2 (citing *Unified Patents Inc. v. Nonend Inventions N.V.*, IPR2016-00174, Paper 26 at 6–7 (PTAB May 8, 2017) and Paper 28 at 3 (PTAB July 25, 2017)). We agree with Petitioner.

First, by waiting until oral argument to raise its challenge, Patent Owner denied Petitioner sufficient notice to address that challenge at an appropriate time in the proceeding. During trial, a petitioner's reply can only respond to what patent owner places in the patent owner response, not what is included in the preliminary response. 37 C.F.R. § 42.23 (b) ("A reply may only respond to arguments raised in the *corresponding* opposition, patent owner preliminary response, or *patent owner response*.") (emphases added). Therefore, for arguments that are not raised in a patent owner response, a petitioner would ordinarily not have an opportunity to respond to them, and the Board would not have an opportunity to consider them in an

orderly fashion. Accordingly, such arguments are waived. *See In re NuVasive, Inc.*, 842 F.3d 1376, 1380–81 (Fed. Cir. 2016) ("NuVasive challenged the public accessibility of the prior art references during the preliminary proceedings of the inter partes review . . . but failed to challenge public accessibility during the trial phase . . . . NuVasive waived its arguments on this issue."). Moreover, the rules make clear that during trial the patent owner's response is the patent owner's opposition to the petition, not merely a supplement to the patent owner's preliminary response. 37 C.F.R. § 42.10 (a) ("A patent owner response is filed as an opposition . . . ."). Further, the word limits given to the patent owner response demonstrate that that response must contain the patent owner's opposition. 37 C.F.R. § 42.24 (b)(2). Allowing the patent owner to use the patent owner response as a supplement, rather than an opposition, would provide the patent owner twice the briefing for the opposition to the petition as the briefing petitioner has for the petition. 37 C.F.R. § 42.24 (b)(2).

Second, Patent Owner was on notice that it needed to raise its challenge to Petitioner's real party in interest in its Patent Owner Response when it filed that paper. In *Nonend Inventions*, the patent owner Nonend Inventions, in its preliminary response, challenged the identification by the petitioner Unified Patents of its real party in interest. *Unified Patents Inc. v. Nonend Inventions N.V.*, IPR2016-00174, Paper 26, 6–7 (PTAB May 8, 2017). Nonend Inventions, however, did not present that challenge in its patent owner response. *Id.* In the final written decision in that proceeding, the Board held that Nonend Inventions waived its challenge regarding Unified Patents' real party in interest. *Id.* Nonend Inventions requested rehearing, arguing that it did not have to present that challenge in its patent

owner response because that challenge does not concern an issue of patentability and the scheduling order in that proceeding merely cautioned patent owner that arguments of patentability would be waived if not raised in the patent owner response. Patent Owner's Request for Rehearing, IPR2016-00174, Paper 27, 2. On rehearing, the Board rejected that argument, holding that the patent owner needed to present its challenge regarding the petitioner's real party in interest in its patent owner response and that by not doing so, the patent owner waived that challenge. Decision, IPR2016-00174, Paper 28, 3–4 (July 25, 2017). Not only was Patent Owner here constructively on notice of the *Nonend* ruling through the decision's publication nearly one year prior to Patent Owner's filing of its Response,[4] but also at least two of the attorneys representing Patent Owner in this proceeding were directly aware of the decision because they represented the patent owner in *Nonend Inventions*. Paper 4, 3; Request for Rehearing, IPR2016-00174, Paper 27, 4. In its RPI motion, however, Patent Owner presents no arguments addressing *Nonend Inventions* or explains why, in light of that decision, Patent Owner did not have notice that its failure to raise its RPI challenge in its Patent Owner Response would waive that challenge. RPI Motion, *passim*.

Third, Patent Owner's reliance on *Motorola Mobility LLC v. Intellectual Ventures II LLC*, IPR2014-00504, Paper 12 at 8 (PTAB Sept. 10, 2014) to argue that real party in interest challenges can never be waived

[4] The *Nonend Inventions* rehearing decision was publicly available on July 25, 2017, and is accessible via Westlaw. IPR2016-00174, Paper 28; *Unified Patents Inc. v, Nonend Inventions*, 2017 WL 3174102 (PTAB July 25, 2017). Patent Owner filed its Response in this proceeding nearly a year later, on June 26, 2018. Paper 9, 34.

during trial is misplaced. *Motorola Mobility* is an institution decision; therefore, the issue of whether a patent owner can waive its challenge regarding a petitioner's real party in interest by not raising it in its Patent Owner Response was not before the panel in *Motorola Mobility*. IPR2014-00504, Paper 12. Further, in *Worlds*, the Federal Circuit held that the patent owner must produce "some evidence that tends to show that a particular third party should be named as a real party in interest . . . . A mere assertion that a third party is an unnamed real party in interest, without any support for that assertion, is insufficient to put the issue into dispute." *Worlds*, 903 F.3d at 1244. Non-waivable challenges, such as a lack of subject matter jurisdiction, have no similar requirement. *Foster v. Chatman*, 136 S. Ct. 1737, 1745 (2016); *St. Bernard Parish Gov't v. U.S.*, 916 F.3d 987, 992–93 (Fed. Cir. 2019). When a party is required to put in some evidence to place an issue into dispute, the party must do so in a timely manner, or it waives the right to raise the issue. *NuVasive*, 842 F.3d at 1380–81.

Fourth, the Federal Circuit's decisions in *Applications in Internet Time* and *Worlds* do not justify Patent Owner's delay until oral argument to raise its challenge here.[5] These Federal Circuit decisions issued on July 9, 2018, and September 27, 2018, respectively. *Applications in Internet Time*, 897 F.3d at 1336; *Worlds*, 903 F.3d at 1237. Patent Owner never sought to supplement its Patent Owner Response in light of these cases and instead waited until oral argument in mid-December 2018 to present a challenge to Petitioner's identification of its real party in interest. *Applications in Internet Time* issued only a few weeks after Patent Owner filed its Patent

[5] As discussed above, the potential issue was first brought to the Board's attention a few days before the December 14, 2018 hearing. Papers 16–18.

Owner Response. Had Patent Owner raised the issue in July 2018, after *Applications in Internet Time* issued, the Board could have authorized supplemental briefing addressing that decision without disrupting the overall schedule for the proceeding. Even if Patent Owner had waited until *Worlds* issued to request authorization to file a supplemental brief, the Board could have authorized such briefing, without excessive disruptions to the overall schedule. Patent Owner's Response was filed on September 17, 2018, only two weeks prior to the issuance of *Worlds*. But Patent Owner waited until oral argument, nearly three months later, to raise the issue. Oral argument is not an appropriate forum for raising a new argument or reviving an abandoned one. *Dell Inc. v. Acceleron, LLC*, 884 F.3d 1364, 1369–70 (Fed. Cir. 2018); *Office Patent Trial Practice Guide*, 77 Fed. Reg. 48,756, 48,768 (Aug. 14, 2012).

Fifth, Patent Owner does not argue that the Board should consider its belated challenge for reasons of equity, and we see no equitable reason to do so. *See* PO RPI Motion 1–2. Patent Owner provides no persuasive reason why it could not have presented its challenge well before oral argument. *Id.* Patent Owner was aware of the evidence that it relies on for its challenge before the filing of its Patent Owner Response: it cites only the evidence that was previously in its Preliminary Response. *Id.* at 3–4 (citing Exs. 2003, 2004); Patent Owner's Demonstrative Exhibits (Paper 18), 5–6, 8–12 (citing Exs. 2001–2005); Prelim. Resp. iv. Further, the trial record indicates that Patent Owner did not sufficiently pursue its challenge. Shortly after the trial institution, Patent Owner sought authorization to file a motion for discovery regarding Petitioner's real party in interest. Paper 8, 2. As discussed above, we did not initially authorize that motion because Patent Owner wanted to

wait to file any motion, but we permitted Patent Owner to seek authorization again when it was ready to file that motion. *Id.* Patent Owner never sought that authorization and never sought additional discovery on the issue. Hr'g. Tr. 21:17–22:6. In other words, Patent Owner abandoned its challenge and then waited until oral argument to try to revive it. The equities, however, do not favor considering a challenge that Patent Owner made no effort to timely raise.

Patent Owner has not directed us to any legal or equitable reasons to consider Patent Owner's belated challenge regarding Petitioner's real party in interest. Therefore, we decline to consider it, and we accept Petitioner's identification of its real party in interest. *Worlds Inc.*, 903 F.3d at 1243. (An "IPR petitioner's initial identification of the real parties in interest should be accepted unless and until disputed by a patent owner.").

*2. Evidence that Would Tend to Show a Particular Unnamed Third Party Should Be Named as a Real Party in Interest*

Even if we were to consider Patent Owner's belated challenge to Petitioner's identification of its real party in interest, Patent Owner has not produced evidence that would put the issue in dispute (i.e., evidence that would tend to show a particular third party should be named a real party in interest).

Patent Owner argues that under *Worlds* our Institution Decision contains an error regarding a presumption and when that error is corrected, we should not accept Petitioner's identification of its real party in interest. RPI Motion 5. We disagree. *Worlds* addresses the burden framework set forth in *Atlanta Gas Light Co. v. Bennett Regulator Guards, Inc.*, IPR2013–00453, Paper 88 (PTAB Jan. 6, 2015), which *Worlds* notes was used by many Board panels. *Worlds*, 903 F.3d at 1241. *Worlds* explains:

> Under *Atlanta Gas Light*, the Board generally accepts an IPR petitioner's identification of the real parties in interest at the time the petition is filed. *Atlanta Gas Light* explained that this initial acceptance "acts as a rebuttable presumption" that benefits the IPR petitioner. Quoting Federal Rule of Evidence 301, the Board stated that "[t]he party against whom a presumption is directed has the burden of producing evidence to rebut the presumption. But this rule does not shift the burden of persuasion, which remains on the party who had it originally." From this, the Board in *Atlanta Gas Light* explained that, where "a patent owner provides sufficient rebuttal evidence that reasonably brings into question the accuracy of a petitioner's identification of the real parties in interest, the burden remains with the petitioner to establish that it has complied with the statutory requirement to identify all the real parties in interest."

*Worlds*, 903 F.3d at 1241–42 (internal citations omitted).

In *Worlds*, the Federal Circuit "largely concurr[ed] with the burden framework used in *Atlanta Gas Light*." *Id.* at 1242. The Federal Circuit, however, "disagree[d] with treating th[e] initial acceptance [of the petitioner's identification] as a 'rebuttable presumption' that formally shifts a burden of production to the patent owner . . . ." *Id.* The Federal Circuit, however, agreed that, to put the issue of real party in interest in dispute, "a patent owner must produce some evidence to support its argument that a particular third party should be named a real party in interest." *Id.*

Patent Owner does not offer any evidence that would support an argument that a particular third party should be identified as a real party in interest here. Patent Owner does not even identify a particular third party that should have been named as a real party in interest, let alone offer evidence that that particular third party should be named. Patent Owner merely argues that Petitioner's members join particular zones, Petitioner files IPRs on behalf of those zones, and that Petitioner's members are real

parties in interest. RPI Motion, 3–4; RPI Obs., pp. 1–8. Patent Owner does not identify any particular zone that is involved with this IPR or identify any particular member as a real party in interest, despite cross examining Petitioner's CEO. RPI Motion, 3–4; Ex. 1026 ¶ 1; RPI Obs., pp. 1–8. Because Patent Owner does not identify any third party that should be named a real party in interest and has not produced any evidence to support such an argument, we would accept Petitioner's identification of its real party in interest even if we were to consider Patent Owner's belated challenge. *Worlds*, 903 F.3d at 1242.

*B. Level of Ordinary Skill*

Petitioner argues that an ordinarily skilled artisan "at and before the priority date for the [challenged] Patent . . . would have a bachelor's degree in computer science, computer engineering, electrical engineering, or a related subject, or equivalent industry or trade school experience in programming software applications." Pet. 6 (citing Ex. 1005 ¶¶ 36–40). Patent Owner does not dispute this assessment or propose an alternative assessment. PO Resp., *passim*. After reviewing the record, we find Petitioner's proposed assessment reasonable and adopt it.

*C. Claim Construction*

In an *inter partes* review, claim terms in an unexpired patent are given their broadest reasonable interpretation in light of the specification of the patent in which they appear. 37 C.F.R. § 42.100(b).[6] Under this standard,

[6] A recent amendment to this rule does not apply here because the Petition was filed on October 6, 2017, which is prior to the November 13, 2018 effective amendment date. *See* Changes to the Claim Construction Standard for Interpreting Claims in Trial Proceedings Before the Patent Trial and

we presume that a claim term carries its "ordinary and customary meaning," which "is the meaning the term would have to a person of ordinary skill in the art in question" at the time of the invention. *In re Translogic Tech., Inc.*, 504 F.3d 1249, 1257 (Fed. Cir. 2007) (quoting *Phillips v. AWH Corp.*, 415 F.3d 1303, 1313 (Fed. Cir. 2005) (en banc); *see also Trivascular, Inc. v. Samuels*, 812 F.3d 1056, 1062 (Fed. Cir. 2016) ("Under a broadest reasonable interpretation, words of the claim must be given their plain meaning, unless such meaning is inconsistent with the specification and prosecution history," citing *Straight Path IP Grp., Inc. v. Sipnet EU S.R.O.*, 806 F.3d 1356, 1362 (Fed. Cir. 2015).). Any special definition for a claim term must be set forth in the specification with reasonable clarity, deliberateness, and precision. *In re Paulsen*, 30 F.3d 1475, 1480 (Fed. Cir. 1994). Finally, only terms which are in controversy need to be construed, and then only to the extent necessary to resolve the controversy. *See Nidec Motor Corp. v. Zhongshan Broad Ocean Motor Co.*, 868 F.3d 1013, 1017 (Fed. Cir. 2017); *Vivid Techs., Inc. v. Am. Sci. & Eng'g. Inc.*, 200 F.3d 795, 803 (Fed. Cir. 1999).

In our Institution Decision, we construed the terms "GPS integral thereto," and "token" and partially construed "originating computer" "recipient computer," and "central computer." Inst. Dec. 11–18. In its Response, Patent Owner accepts, for purposes of this proceeding, our constructions in our Institution Decision, but also implies that we should address the term "loosely networked." PO Resp. 3–5. In its Reply,

---

Appeal Board, 83 Fed. Reg. 51,340; 51,340 (Oct. 11, 2018).

Petitioner does not oppose any of the constructions set forth in the Institution Decision, but argues that we should not construe "loosely networked" because no challenged claim recites the term. Pet. Reply 1–2.

Under the circumstances, we maintain our constructions for "GPS Integral thereto" and "token" and our partial construction of "originating computer" "recipient computer," and "central computer" set forth in our Institution Decision. For convenience, we repeat those constructions and that partial construction below. We also address the parties' arguments regarding "loosely networked."

*1. "GPS integral thereto"*

As set forth in our Institution Decision, we construe "GPS integral thereto" to be "Global Positioning System equipment integral thereto." Inst. Dec. 13.

2. "token"

As set forth in our Institution Decision, we construe "token" as "a distinguishable unit of a program, such as an index, an instruction, or a command that can represent something else such as a question, answer, or operation." Inst. Dec. 16–17.

*3. "originating computer"/"recipient computer"/"central computer"*

As set forth in our Institution Decision, we construe "central computer," "originating computer," and "recipient computer" as encompassing a computer having the ability to perform functions associated with an originating computer, a recipient computer, and/or a central computer. Inst. Dec. 18.

*4. "loosely networked"*

In a section of the Patent Owner Response, titled "Claim Construction," Patent Owner argues that "[b]oth the Board and Dr. Reddy

fail to recognize the importance of the term *loosely networked* to the [challenged] patent." P.O. Resp. 3–5 (emphasis original). Patent Owner, however, does not expressly request that we construe this term. *Id.* Further, Patent Owner provides no reason for us to do so. Assuming Patent Owner is implicitly requesting that we construe the term, Patent Owner does not argue that any challenged claim recites this term. In fact, no challenged claim recites the term or even the terms "networked" or "network."[7] And Patent Owner gives us no reason to construe the term "loosely networked" despite its lack of recitation in any challenged claim. Accordingly, we decline to construe "loosely networked."

*D. Analysis of the Asserted Grounds of Unpatentability*

*1. Principles of Law*

A patent claim is unpatentable under 35 U.S.C. § 103(a) if the differences between the claimed subject matter and the prior art are "such that the subject matter as a whole would have been obvious at the time the invention was made to a person having ordinary skill in the art to which said subject matter pertains." *KSR Int'l Co. v. Teleflex Inc.*, 550 U.S. 398, 406 (2007). The question of obviousness is resolved on the basis of underlying factual determinations, including: (1) the scope and content of the prior art; (2) any differences between the claimed subject matter and the prior art; (3) the level of skill in the art; and (4) objective evidence of nonobviousness, i.e., secondary considerations.[8] *Graham v. John Deere Co.*, 383 U.S. 1, 17–

[7] Claims 1 and 5 of the challenged patent recite "network," and claims 7 and 15 recite "loosely networked." Ex. 1001. But claims 1, 5, 7, and 15 are not challenged in this proceeding. Pet. 5.

[8] Patent Owner does not contend that such secondary considerations are

18 (1966). "To satisfy its burden of proving obviousness, a petitioner cannot employ mere conclusory statements. The petitioner must instead articulate specific reasoning, based on evidence of record, to support the legal conclusion of obviousness." *In re Magnum Oil Tools Int'l, Ltd.*, 829 F.3d 1364, 1380 (Fed. Cir. 2016). We analyze the asserted ground with the principles stated above in mind.

*2. Overview of the Prior Art References*

*a. Kari*

Kari describes a method and system for transmitting information to a user. Ex. 1006, [57]. Figure 2 of Kari is reproduced below:

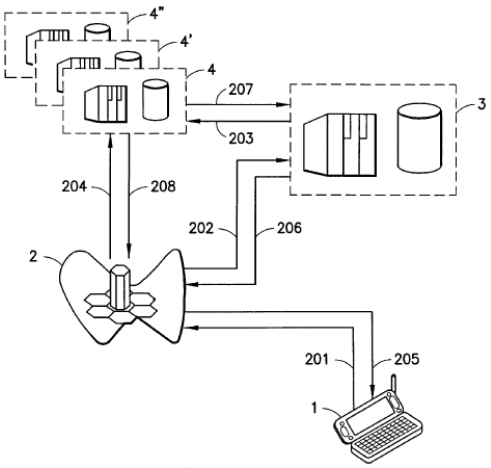


FIG.2

Figure 2 is a reduced block chart illustrating Kari's system. Ex. 1006, 2:35–36. In this system, search terminal 1 comprises a telecommunication terminal, such as a mobile station. *Id.* at 2:58–59. Search terminal 1 can be a PDA (personal digital assistant) and can use satellite communication means (GPS). *Id.* at 3:11-16. Search terminal 1 communicates with

---

present. PO Response, *passim*.

telecommunication network 2, which can be a mobile communication network. *Id.* at 2:59–64. Connection server 3 and remote servers 4, 4', and 4" also communicate with telecommunication network 2. *Id.* at 2:64–66.

Search terminal 1 can start a World Wide Web [WWW] browser to form a query message. Ex. 1006, 6:40–45. To do so, the user starts a connection set-up to connection server 3, then connection server 3 provides a query form to search terminal 1. *Id.* at 2:45–46. Figure 7 of Kari is reproduced below:

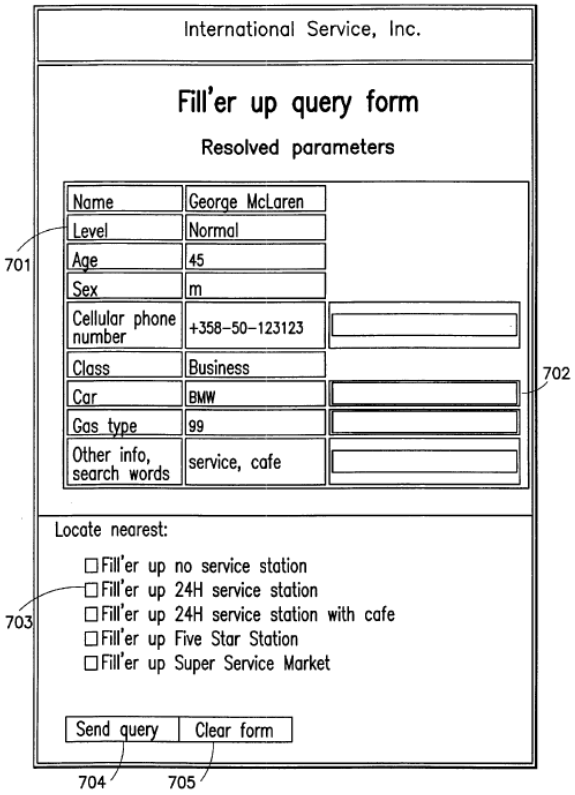


FIG.7

Figure 7 of Kari shows a query form loaded from connection server 3 to the data processor at search terminal 1. Ex. 1006, 2:45–46. The illustrated form is a blank form designed as an Internet-type WWW page. *Id.* at 6:40–49.

The user can enter data into the blank form as illustrated in Figure 8 of Kari, reproduced below:

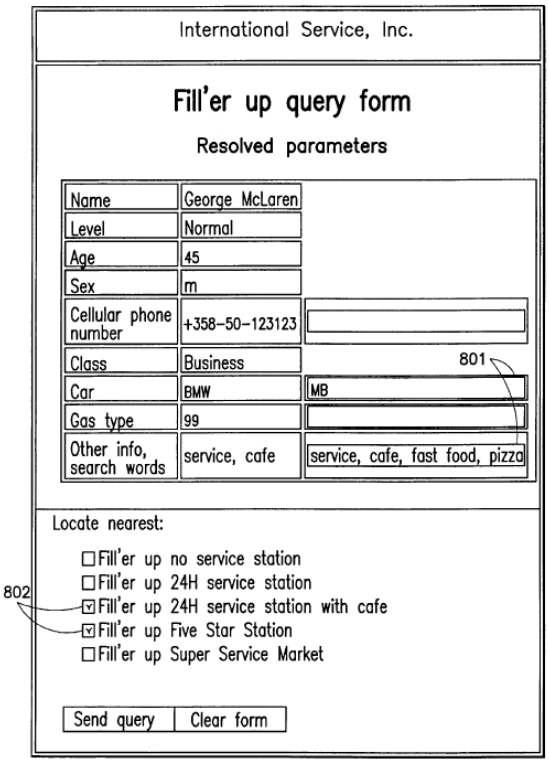


FIG.8

Figure 8 of Kari shows a query form filled in by the user. Ex. 1006, 2:47. Reference number 801 designates parameters defined by the user. *Id.* at 15:28–31. After the query form is filled out, connection server 3 searches its databases to respond to the query. *Id.* at 15:32–35. Connection server 3 can then transmit the query form to a remote server 4, 4', or 4" to further process the query form. *Id.* at 8:20–27; 15:62–64.

*b. Chan*

Chan describes a system for accessing local information in a database. Ex. 1010, [57]. The database contains merchandise information and position coordinates of a Global Position System. *Id.* A user searches the database by sending a query, to a remote server computer, which indicates the

geographical area to be searched and search criteria. *Id.* The server computer returns the search result. *Id.*

Figure 3 of Chan is reproduced below:

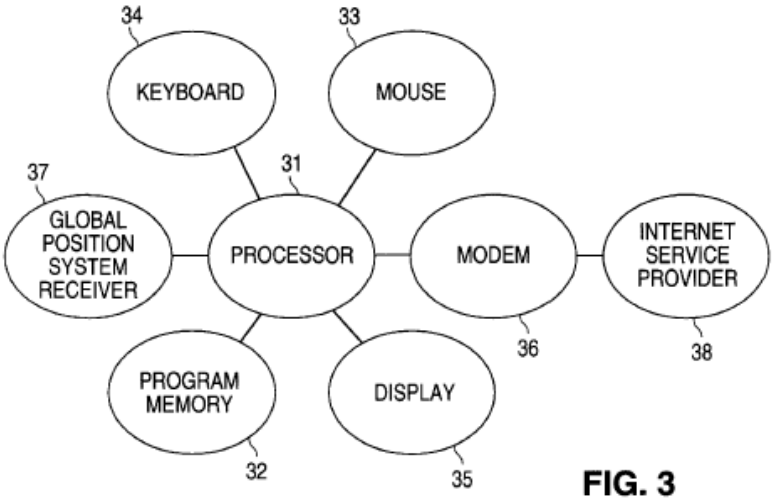


Figure 3 of Chan shows end-user computer system 30 that is used to retrieve merchandise information. Ex. 1010, 3:63, 5:21–23. As shown, end-user computer system 30 includes Global Positioning System receiver 37. *Id.* at 5:23–28. End-user computer system 30 is used in the embodiment of Figure 2 of Chan as an end-user computer system. *Id.* at 5:27–32.

Figure 2 of Chan is reproduced below:

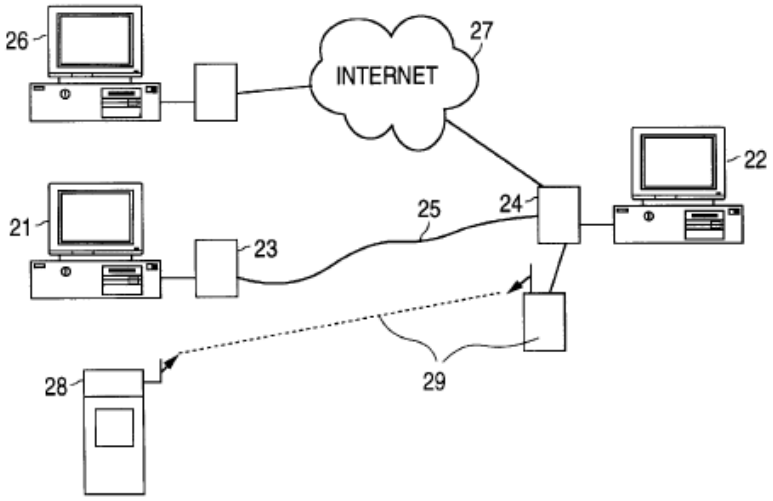


**FIG. 2**
(PRIOR ART)

Figure 2 of Chan shows end-user computers 21, 26, and 28 communicating with server computer 22. Ex. 1010, 4:50-51. End-user computer 21 communicates with server computer 22 via modems 23 and 24 and phone line 25. *Id.* at 4:51–53. End-user computers 26 and 28 use Internet 27 and radio frequency link 29, respectively, to communicate with server computer 22. *Id.* at 4:53–57.

The local computer in Chan can be a hand held computer or a portable computer. Ex. 1010, 3:11–12. Further, a user can install a miniature computer with a GPS receiver on a car and access the Internet through a cellular phone or a wireless connection. *Id.* at 3:12–15.

*c. Darnell*

Darnell is titled "HTML 4 Unleashed" and describes itself as a complete reference to Hypertext Markup Language (HTML) 4. Ex. 1007, cover[9]. According to Darnell, HTML "is the language that puts the face on

[9] Petitioner added page numbers to Ex. 1007, but, the Petition cites to

the Web" and "consists of a variety of elements called tags." *Id.* at xxxvii. A chapter in Darnell is directed to "Building and Using HTML Forms." *Id.* at 231. Darnell discloses that forms "are used for a variety of purposes" and "allow visitors to your site to give you input." *Id.* at 232. Darnell further describes HTML tags: "An HTML document is composed of HTML tags: "*tags*…are used for everything from defining type styles and headings to inserting specialized content . . . ." Ex. 1007, xxxvii. Further, Darnell describes the input element for HTML, providing the example reproduced below:

> **The INPUT Element**
>
> <INPUT(type=text¦password¦checkbox¦radio¦submit¦imageJreset¦button¦hidden
> •¦file][name=*controlName*][value=*controlValue*][checked][disabled][readonly]
> •[size=controlWidth][maxlength=wordLength][src=URL][alt=altText][usemap=U
> RL]
> •[align=leftJcenter¦right¦justify][tabindex=tabNum][accesskey=keyCombo]
> •[onfocus=script][onblur=script][onselect=script][onchange=script]
> •[accept=charset] [*core*] [*international*] [*events*]>

Ex. 1007, 234.

The above example illustrates the INPUT element in HTML, which, as shown, includes a type attribute in the first line. One type attribute is the form control of Text entry boxes, for which text is input. *Id.* at 234–235.

Darnell also provides exemplary code using text responses to create a form. This exemplary code and the form it produces, the latter of which is illustrated in Figure 15.9 of Darnell, are reproduced below:

```
<INPUT type="text" .name="firstname" size="40">
<INPUT type="text" name="lastname" size="40">
<INPUT type="text" name="address1" size="40">
```

---

Darnell's original page numbering. For ease of reference, unless noted otherwise, we cite to each reference's original page or column numbering. (With Petitioner's numbering, Darnell's cover is page 1.)

```
<INPUT type="text" name="address2" size="40">
<INPUT type="text" name="city" size="40">
<INPUT type="text" name="state" size="2">
<INPUT type="text" name="zipcode" size="10">
```

**FIGURE 15.9.**
*Text boxes.*

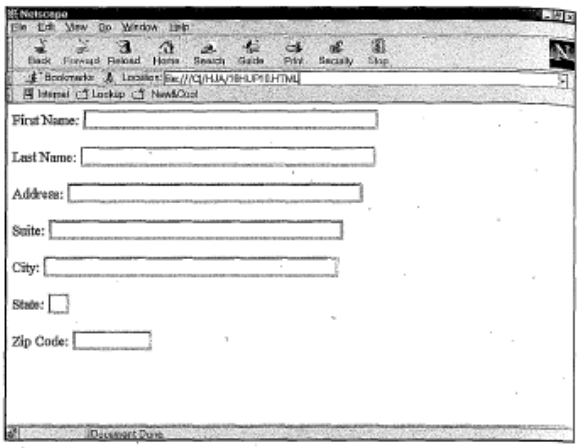


Ex. 1007, 241–242.

As illustrated, the exemplary code includes input elements and the form it produces displays text boxes corresponding to a first name, last name, and an address.

*d. Todd (Ex. 1009)*

Todd describes a "questionnaire device" for use in restaurants. Ex. 1009, [57]. The device is intended to be incorporated into a book that is presented to a customer with a restaurant check. *Id.* at 5:42–45.

Figure 1 of Todd is reproduced below:

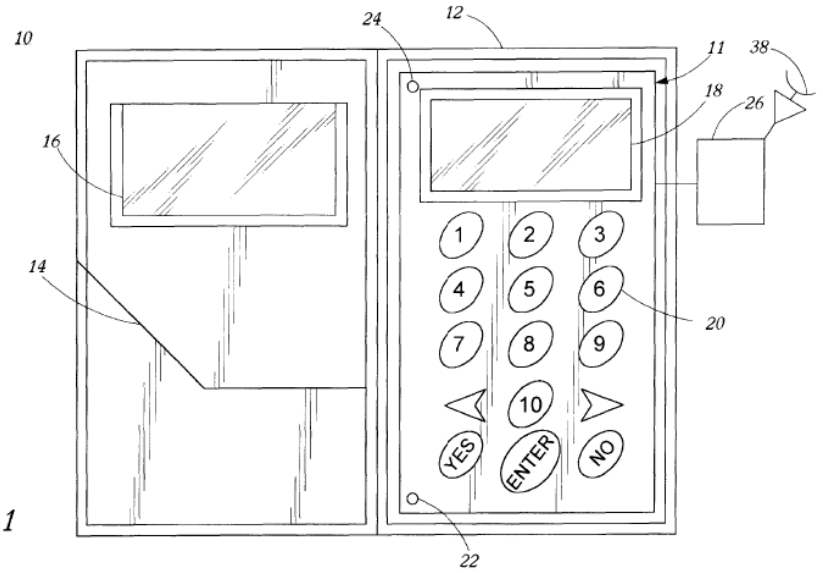

Figure 1

Figure 1 is an illustrative view of Todd's device 11. Ex. 1009, 6:19–21. Device 11 is in checkbook 12, which has pockets 14 and 16 for holding a check and a credit card, respectively. *Id.* at 7:6–13. Device 11 contains display screen 18, keypad 20, and transceiver 26 with antenna 28.[10] *Id.* at 7:15–42. Device 11 electronically presents a series of questions, records the answers, and stores and/or transmits all or a portion of a survey response. *Id.* at [57]. The device can store responses internally. *Id.* at 5:35–40.

*3. Analysis of Claim 19*

Patent Owner and Petitioner each begin their claim analyses with claim 19. For ease of reference, we also do so. As set forth below, Petitioner argues that Kari, Darnell, Todd, and Chan teach or suggest every limitation of claim 19, and Patent Owner disputes that those references teach or suggest limitations 19.2.1, 19.2.3, 19.7, and 19.8. Petitioner presents its rationale for combining the teachings of the applied references in its

[10] In the Specification, Todd identifies this antenna with numeral 28. *Id.* at 7:15–42. Figure 1 identifies it with numeral 38.

discussion of individual claim limitations, and generally Patent Owner also addresses Petitioner's rationale for combining teachings in its discussion of individual claim limitations. Patent Owner, however, presents some additional arguments disputing Petitioner's showing for claim 19, including Petitioner's rationale to combine, outside of its discussion of individual claim limitations. Patent Owner also presents arguments challenging the reliability of Dr. Reddy's testimony.

Below, we first address the parties' arguments directed to individual limitations of the claim. In discussing the individual limitations, we address Petitioner's rationale for combining teachings. In that discussion, we also address Patent Owner's challenges to that rationale when Patent Owner presents that challenge as part of Patent Owner's discussion of an individual limitation. Next, we address Patent Owner's additional arguments regarding Petitioner's showing in which Patent Owner has not identified a particular claim limitation being addressed, including disputes regarding rationales to combine when presented that way, and Petitioner's responses to those arguments. Finally, we address Patent Owner's arguments regarding the reliability of Dr. Reddy's testimony and Petitioner's responses.

*a. Arguments and Evidence Regarding the Limitations of Claim 19*

*[19.0] A method for managing data*

Petitioner argues that Kari teaches the preamble recitation of claim 19 by describing "a method and system of transmitting information." Pet. 16 (quoting Ex. 1006, [57]). This argument is supported by the testimony of Dr. Reddy. Ex. 1005 ¶¶ 78–80. Patent Owner provides no counterargument. PO Resp. 18–26.

On this record, after reviewing the parties' evidence and arguments, we determine that Petitioner has proven that Kari teaches "a method of managing data."

> *[19.1] (a) establishing communications between a handheld computing device and an originating computer wherein said handheld computing device has a GPS integral thereto;*

Petitioner argues the combination of Kari and Chan teaches limitation 19.1. Pet. 16. According to Petitioner, Kari establishes communications between search terminal 1 and connection server 3. *Id.* at 16–17 (citing Ex. 1006, 6:49–51, 6:66–7:2, 15:45–52). Petitioner argues search terminal 1 is a "mobile station," which corresponds to a handheld computing device. *Id.* at 17 (citing Ex. 1006, 2:56–59). Petitioner further argues connection server 3 is an Internet server, which corresponds to an originating computer. *Id.* (citing Ex. 1006, 4:59–67). Further, Petitioner argues that search terminal 1 "can use satellite location means (GPS)" and, therefore, would have to include GPS equipment. *Id.* at 18.

Petitioner does not contend that Kari's search terminal 1 has GPS equipment integral thereto. Pet. 18. Petitioner, however, argues that an ordinarily skilled artisan would have understood that there are a finite number of predictable choices for the physical arrangement of Kari's GPS equipment and search terminal 1: the GPS equipment is either integral to or is externally connected to the search terminal (e.g., by a serial connection). *Id.* at 18–19. Petitioner asserts that efficiency would have suggested to the ordinarily skilled artisan making the GPS equipment integral to the search terminal. *Id.* Further, Petitioner argues an ordinarily skilled artisan would have had a reasonable expectation of success in incorporating the GPS equipment into the search terminal because it was well known prior to the

filing of the challenged patent to incorporate GPS equipment into a mobile telephone. *Id.* at 19 (citing Ex. 1014, Fig. 3; Ex. 1015, Figs. 4–5).

Petitioner further argues that Chan "teaches a computing device with GPS integral thereto [by] describing a 'hand held computer or . . . portable computer' as an 'end-user computer system' that 'comprises . . . a Global Position System receiver 37.'" Pet. 19 (quoting Ex. 1010, 3:11–15, 5:21–27) (emphasis omitted.). Petitioner argues that Kari and Chan are analogous art in the same field of endeavor: systems and methods for receiving and fulfilling location-based queries. *Id*. Further, Petitioner argues an ordinarily skilled artisan would have been motivated to combine Chan's hand-held computer with an integrated GPS receiver with Kari's systems and methods because Chan teaches that an integrated GPS receiver can continuously update current position coordinates. *Id.* at 20. Petitioner's arguments are supported by the testimony of Dr. Reddy. Ex. 1005 ¶¶ 81–90.

Patent Owner provides no counterargument. PO Resp. 18–26.

After reviewing the parties' evidence and arguments, we determine that Petitioner has proven that Kari and Chan teach limitation 19.1 and that Petitioner has articulated an adequate rationale for combining the references.

*[19.2.1] (b) receiving within said handheld computing device a transmission of a tokenized questionnaire from said originating computer*

Petitioner argues that the combination of Kari and Darnell teaches limitation 19.2.1. Pet. 21. In particular, Petitioner argues that Kari describes sending, from the connection server, a query form that is loaded and stored on the search terminal. *Id.* (citing Ex. 1006, 6:66–7:6). Petitioner argues that Kari "teaches 'receiving within said handheld computing device a

transmission of a' . . . 'questionnaire from said originating computer.'" *Id.* (emphasis omitted).

Petitioner acknowledges that Kari does not describe its query form as tokenized, but Petitioner argues that Kari teaches that its questionnaire is "an Internet-type WWW page" and that its search terminal starts "a WWW browser." Pet. 21 (citing Ex. 1006, 6:47–49, 64–66). Referencing Darnell, Petitioner argues that a WWW page displayed in a WWW browser would have been written in HTML with HTML tags. *Id.* (citing Ex. 1007, xxxvii). Petitioner further argues that HTML tags are distinguishable units of a program (an HTML page) that represent instructions, such as how to render a text input box. *Id.* at 21–22 (citing Ex. 1007, xxxvii, 232, 234, 241). Accordingly, Petitioner argues that HTML tags are tokens, which comports with our construction of "token" above. *Id.* at 22. Petitioner further argues Kari's query form would have had multiple HTML tags and, thus, multiple tokens. *Id.* at 23. Therefore, Petitioner argues that Kari's query form is a tokenized questionnaire. *Id.* at 23.

Petitioner argues that an ordinarily skilled artisan would have combined Kari and Darnell because Darnell is a reference book that would have been obvious for an ordinarily skilled artisan to consult when implementing Kari's teachings. Pet. 25. Petitioner argues that Kari describes searching for WWW pages, an ordinarily skilled artisan would have recognized that WWW pages are written in HTML, and Darnell is an HTML reference. *Id.* at 24–25. Petitioner's arguments are supported by the testimony of Dr. Reddy. Ex. 1005 ¶¶ 91–99, 104–108.

Patent Owner disputes that an ordinarily skilled artisan would have combined Kari and Darnell. In particular, Patent Owner argues that an

ordinarily skilled artisan "who sought to implement the invention of the [challenged] patent given Kari would not look to Darnell as a reference because . . . Kari's device did not support the version of HTML taught in that reference." PO Resp. 19 (emphasis omitted). Patent Owner argues that Kari's device, the Nokia Communicator 9000, only supported HTML 2, whereas Darnell is directed to HTML 4. *Id.* at 11–12 (citing Ex. 2009, 1-8). Patent Owner provides the testimony of Dr. Hale for support. Ex. 2006 ¶¶ 29–31.

In its Reply, Petitioner argues that Kari is not limited to the use of the Nokia Communicator 9000 or HTML 2. Pet. Reply 3–5. Petitioner further argues that Kari was filed in 1997 and, by the time of filing of the challenged patent, HTML 4 was available for mobile devices. *Id.* at 4–5. Petitioner's arguments are supported by the testimony of Dr. Reddy. Ex. 1021 ¶¶ 10–13.

We agree with Petitioner. The record shows that as of the filing of the challenged patent, an ordinarily skilled artisan would not have limited Kari's teachings to the Nokia Communicator 9000 or HTML 2. *In re Heck*, 699 F.2d 1331, 1333 (Fed. Cir. 1983) ("[t]he use of patents as references is not limited to what the patentees describe as their own inventions or to the problems with which they are concerned. They are part of the literature of the art, relevant for all they contain." (quoting *In re Lemelson*, 397 F.2d 1006, 1009 (CCPA 1968)). Kari merely describes the Nokia 9000 Communicator as being "[a] device suitable for the search terminal 1." Ex. 1006, 3:16–17. And nearly five years passed between the U.S. filing of Kari and the filing of the earliest priority application for the challenged patent. Ex. 1001 [60]; Ex. 1006 [22]. Dr. Reddy testifies that in the interim, HTML

4, a later version of HTML, was used for devices like Kari's search terminal 1. Ex. 1021 ¶ 12.

According to Dr. Reddy, in 1999, the World Wide Web Consortium published HTML 4.0 Guidelines for Mobile Access ("Guidelines") (Ex. 1023) that describe using HTML 4 with mobile devices such as PDA's and mobile/cellular phones. Ex. 1021 ¶ 13. Kari describes its search terminal 1 as advantageously being a PDA with means for transmitting voice (a mobile phone), stating that search terminal 1 is "advantageously a *PDA* type teleterminal (*Personal Digital Assistant*) comprising advantageously means for data processing, means for *transmitting voice*, telefaxes, data, DTMF signals, and two-way paging." Ex. 1006, 3:11–15 (emphasis added). And the Guidelines indicate that HTML 4 could be used in "Information Appliances" "such as televisions . . . PDAs . . . and cellular phones." Ex. 1023 (1. Introduction).[11] Similarly, the Guidelines list a "PDA" and a "mobile phone" as exemplary mobile devices for which HTML 4 can be used. *Id.* (2. Requirements from Mobile Access).

Further, it is undisputed that HTML 4 is a later version of HTML that Darnell describes as "a solid step forward" from the prior version of HTML with advantages, such as: "style sheet implementation of appearance control, an expanded model for tables, support for the emerging Dynamic HTML technologies, and enhancements to forms." Ex. 1007, 8. We find that in light of the fact that HTML 4 is a later version of HTML, the Guidelines describe its use with mobile devices, and Darnell describes its advantages over prior versions of HTML, an ordinarily skilled artisan in 2002 would

[11] No page numbers were provided for Ex. 1023, so we cite to section headings for that exhibit.

have (i) considered Darnell's teachings of HTML 4 after reading Kari and (ii) combined the pertinent teachings from those references.

After reviewing the parties' evidence and arguments, we determine that Petitioner has proven that the combination of Kari and Darnell teaches limitation 19.2.1, and that Petitioner's reason for combining the references sufficiently supports the legal conclusion of obviousness.

*[19.2.2] said tokenized questionnaire including at least one question requesting location identifying information*

Petitioner argues that Kari teaches limitation 19.2.2. Pet. 24. According to Petitioner, Kari teaches that the "user can enter the information on the location . . . manually" in Kari's query form. *Id.* (quoting Ex. 1006, 7:11–14, 60–65). Petitioner argues that, as a result, Kari's query form includes at least one question requesting location information. *Id.* These arguments are supported by the testimony of Dr. Reddy. Ex. 1005 ¶¶ 100–102. Patent Owner provides no counterargument. PO Resp. 18–26.

After reviewing the parties' evidence and arguments, we determine that Petitioner has proven that Kari teaches limitation 19.2.2.

*[19.2.3] said tokenized questionnaire comprising a plurality of device independent tokens*

Petitioner argues that Kari and Darnell teach limitation 19.2.3. Pet. 24–25. Petitioner argues HTML tags are device independent tokens, quoting Darnell that "HTML offered a platform-independent means of marking data for interchange." *Id.* (citing Ex. 1007, 16). Petitioner argues that Kari's disclosure of a query form as a WWW page, combined with Darnell's description of HTML tags, teaches a tokenized questionnaire comprising a plurality of device independent tokens. *Id.* Petitioner's arguments are supported by the testimony of Dr. Reddy. Ex. 1005 ¶ 104.

Patent Owner presents the same counterargument it presented for limitation 19.2.1: that an ordinarily skilled artisan would not have combined Kari and Darnell because an ordinarily skilled artisan "who sought to implement the invention of the [challenged] patent given Kari would not look to Darnell as a reference because . . . Kari's device did not support the version of HTML taught in that reference." PO Resp. 19. As described for limitation 19.2.1, we disagree with that counterargument for the reasons discussed above.

After reviewing the parties' evidence and arguments, we determine that Petitioner has proven that the combination of Kari and Darnell teaches limitation 19.2.3.

*[19.3] (c) ending said communications between said handheld computing device and said originating computer;*

Petitioner argues Kari teaches limitation 19.3. Pet. 27–28. Petitioner argues Kari teaches "that 'the connection to connection server 3 can be cut' once 'the query form is loaded on the display of search terminal 1.'" *Id.* at 27 (quoting Ex. 1006, 7:14–17). Petitioner further argues "that 'the connection server 3 has a predefined WWW page' and that the user 'can load the WWW page from the connection 3 and store it locally.'" *Id.* (quoting Ex. 1006, 13:45–52). Further, according to Petitioner, Kari teaches that "when 'the user subsequently wants to make a query' 'if the questionnaire used was a form stored in the storing means of the search terminal 1, connection set-up is started to the connection server 3 after the form is correctly filled-in.'" *Id.* (citing Ex. 1006, 13:59–61, 14:25–28). Petitioner argues that these combined disclosures teach ending the communications between the search terminal and the connection server after the storing of the query form. *Id.* Petitioner argues an ordinarily skilled

artisan would have recognized that, because if the search terminal and connection server were still in communication with each other after the query form was stored, there would be no need to subsequently perform a connection set-up. *Id*. Petitioner's arguments are supported by the testimony of Dr. Reddy. Ex. 1005 ¶¶ 110–114. Patent Owner presents no counterargument. PO Resp. 18–26.

After reviewing the parties' evidence and arguments, we determine that Petitioner has proven that the combination of Kari and Darnell teaches limitation 19.3.

*[19.4] (d) after said communications has been ended,*

Petitioner argues Kari teaches limitation 19.4 because Kari "teaches steps that occur '[a]fter the query form is loaded' . . . [are] performed once 'the connection to the connection server 3 [is] cut.'" Pet. 28 (citing Ex. 1006, 7:14–17). Patent Owner provides no counterargument. PO Resp. 18–26. After reviewing the parties' evidence and arguments, we determine Petitioner has proven that Kari teaches limitation 19.4. Because limitation 19.4 must be read in combination with limitations 19.5, 19.6, and 19.7, we address the combinations of those limitations below.

> *[19.5] (d1) executing at least a portion of said plurality of tokens comprising said questionnaire on said handheld computing device to collect at least one response from a first user,*

Petitioner argues Kari teaches limitation 19.5 by disclosing: "[a]t the stage when the user wants to make a query, the WWW page is loaded for example with an Internet browser." Pet. 28 (citing Ex. 1006, 15:59–61). According to Petitioner, Kari's disclosure of loading a WWW page with an Internet browser corresponds to executing at least a portion of said plurality of tokens on a handheld computing device, because when the WWW page is

loaded, the HTML page having HTML tags (the plurality of tokens) would be rendered, or executed, by the web browser to display the form fields. *Id.* (citing Ex. 1007, 24). Petitioner argues that Kari loads the WWW page to collect at least one response from a first user because Kari "describes that 'the WWW page is loaded … and the questionnaire is filled in for the relevant parts.'" *Id.* at 28–29 (quoting Ex. 1006, 13:59–61). Petitioner further argues that the WWW page is loaded after the connection to the connection server is cut. *Id.* at 29. Petitioner's arguments are supported by testimony of Dr. Reddy. Ex. 1005 ¶¶ 118–122. Patent Owner provides no counterargument. PO Resp. 18–26.

After reviewing the parties' evidence and arguments, we determine that Petitioner has proven that Kari teaches the combination of limitations 19.4 and 19.5.

*[19.6] (d2) storing within said computing device said at least one response from the first user;*

Petitioner argues Kari and Todd teach limitation 19.6. Pet. 29. Petitioner argues Kari suggests storing a response from a first user by disclosing "the application program forms a query message on the basis of the information to be transmitted to the connection server . . . ." *Id.* (citing Ex. 1006, 8:1–5). According to Petitioner, an ordinarily skilled artisan would have understood that, upon forming the query message, Kari's query message and its response[s] from the user are stored (at least temporarily) in random access memory of the search terminal. *Id.* at 29–30. Petitioner argues that it was common for computing devices at the time of the filing of the challenged patent to temporarily store data to be transmitted. *Id.* at 30. Further, Petitioner argues Kari teaches that "the application program combines the entered information and forms a query message for example

according to the hyper text mark-up language (HTML) and HTTP definitions to be transmitted to the connection server 3." *Id.* (citing Ex. 1006, 14:15–21). Petitioner asserts that combining the entered information to form a query message would have been understood by an ordinarily skilled artisan to include at least temporarily storing the result of the formation before transmission (e.g., before Kari's connection is established). *Id.* at 29–30.

Petitioner further argues that Todd teaches storing survey responses in a portable survey device. Pet. 30. According to Petitioner, Todd "describes a device which 'electronically presents a series of questions, records the answers, and stores . . . . all or a portion of the survey response.' *Id.* (quoting Ex. 1009, [57]). Further, according to Petitioner, Todd's "device presents a series of questions, or prompts, to the user and records the answers. [And] [t]he on-board storage is sufficiently large to allow the device to store all of the responses internally. . . ." *Id.* (citing Ex. 1009, 5:35–40).

Petitioner argues that an ordinarily skilled artisan would have been motivated to incorporate Todd's teachings of storing survey responses into Kari's system because Todd suggests storing responses when conditions for transmission are not met. Pet. 31 (citing Ex. 1009, 10:15–18, 9:67–10:1). According to Petitioner, Kari also describes situations in which conditions for transmission are not met (e.g., Ex. 1006, 8:6–15 (describing blocks 312 and 313)). *Id.* Petitioner argues an ordinarily skilled artisan would have understood Kari's query message is analogous to Todd's survey responses and that storing the information in the query in Kari's device would be desirable during Kari's connection, re-establishment, and waiting process to

maintain the user's answers until the connection is established. *Id.* at 31–32. Petitioner argues that, without such storing, Kari's user would have to re-enter his or her information, which would result in a non-optimal experience. *Id.* at 32. Thus, according to Petitioner, an ordinarily skilled artisan would have been motivated to incorporate Todd's storing of survey responses into the system of Kari to remove the need for the user to re-enter query message information while a connection is being set up. *Id.*

Petitioner's arguments are supported by the testimony of Dr. Reddy. Ex. 1005 ¶¶ 122–133. Patent Owner presents no counterargument. PO Resp. 18–26.

After reviewing the parties' evidence and arguments, we find Petitioner has proven that Kari and Todd teach the combination of limitations 19.4 and 19.6, and that Petitioner's reason for combining the references is sufficient to support the legal conclusion of obviousness.

*[19.7] (d3) using said GPS to automatically obtain said location identifying information in response to said at least one question that requests location identifying information*

Petitioner argues Kari teaches limitation 19.7. Pet. 34. First, Petitioner argues that Kari teaches using GPS to automatically obtain said location identifying information, and directs us to where Kari discloses that "the application program reads automatically the information on the location . . . the information on the location can be determined e.g. by using GPS equipment." *Id.* (quoting Ex. 1006, 7:60–67). Petitioner further argues Kari uses this GPS equipment responsive to a question that requests location identifying information, directing us to where Kari discloses that the "user can enter the information on the location . . . manually," but if the user has not done so, "the application program reads automatically the information on

the location . . . by using GPS." *Id.* (quoting Ex. 1006, 7:11–14, 60–67). Petitioner interprets this disclosure as teaching that the user can enter the location manually in the query form in response to a question, but if the user does not, the device utilizes the user's GPS location instead. *Id.* According to Petitioner, Kari's use of GPS location information is in response to at least one question that requests location identifying information. *Id.* Petitioner's arguments are supported by the testimony of Dr. Reddy. Ex. 1005 ¶¶ 134–139.

Patent Owner argues that Kari and the other cited prior art do not teach or suggest the combination of limitations 19.2.3 and 19.7. PO Resp. 20–21. Patent Owner notes that limitation 19.2.3 requires that the tokenized questionnaire comprises a plurality of device independent tokens. *Id.* at 20. Patent Owner argues that Petitioner has mapped these device independent tokens to HTML tags, but argues that "limitation [19.7] cannot be coded in a device independent manner using standards-based HTML tags and browser." *Id.* Patent Owner argues that "neither HTML 2 or 4 had the capability of reading from a device such as a GPS receiver." *Id.* at 21. Patent Owner further argues that neither "Chan nor Todd mentions HTML, browsers, or device independence in connection with any of its embodiments." *Id.* Patent Owner continues that: "As such, [an ordinarily skilled artisan] in possession of Kari and seeking to solve the problem in the [challenged] patent would have no reason to look to Todd, Chan, and/or Darnell . . . because none of these references teaches how to read a GPS receiver in a device independent fashion using HTML." *Id.* Patent Owner's arguments rely on the testimony of Dr. Hale for support. *Id.* (citing Ex. 2006 ¶¶ 34–37).

In Reply, Petitioner argues that even if the software performing limitation 19.7 in Kari included some device-dependent software that would not preclude Kari from teaching limitations 19.2.3 and 19.7. Pet. Reply 11–13. Petitioner argues that limitation 19.2.3 requires a questionnaire with device independent tokens, but limitation 19.7 does not require that the software that obtains the location using GPS be device independent. *Id.* at 13. We agree. Limitations 19.2.1 and 19.2.3 require that a handheld computing device receive a tokenized questionnaire comprising device independent tokens. No recitation in limitation 19.7, however, mandates that the software that uses "said GPS to automatically obtain said location identifying information in response to said at least one question that requests location identifying information" be device independent. Patent Owner has not identified any language in that limitation that creates such a requirement, and we see none. PO Resp. 20–21.

After reviewing the parties' evidence and arguments, we find Petitioner has proven that Kari teaches the combination of limitations 19.4 and 19.7.

*[19.8] (e) establishing communications between said handheld computing device and a recipient computer;*

Petitioner argues that Kari teaches limitation 19.8. Pet. 35. Petitioner directs us to where Kari discloses that: "[t]he application program starts to reestablish connection in block 312. In block 313, it is checked if the connection is set up . . . . After the search terminal 1 has received a response from the connection server 3, i.e. the connection is established, the search terminal 1 starts transmission . . . ." *Id.* (quoting Ex. 1006, 8:6–19). Petitioner argues Kari's description of re-establishing a connection between search terminal 1 and connection server 3 teaches establishing

communications between a handheld computing device and a recipient computer. *Id*. Petitioner's arguments are supported by the testimony of Dr. Reddy. Ex. 1005 ¶¶ 140–142.

Patent Owner argues that neither Kari nor the other applied prior art references teach performing limitation 19.8 in a device independent manner. PO Resp. 24–26. In its Reply, Petitioner argues that limitation 19.8 does not require that it be performed in a device independent manner. Pet. Reply 21. We agree with Petitioner.

Patent Owner has not identified any recitation in limitation 19.8 that requires this limitation be performed in a device independent manner, and we see none. PO Resp. 24–26. As discussed above, limitations 19.2.1 and 19.2.3 require that a handheld computing device receive a tokenized questionnaire comprising device independent tokens. But the patentee did not include any recitations of device independence in limitation 19.8, and we cannot merely read such a restriction into that claim limitation. *Phillips v. AWH Corp*., 415 F.3d, 1303, 1323 (Fed. Cir. 2005).

After reviewing the parties' evidence and arguments, we find Petitioner has proven that Kari teaches limitation 19.8.

> *[19.9] (f) transmitting a value representative of each of said at least one response stored within said handheld computing device to said recipient computer;*

Petitioner argues Kari and Todd teach limitation 19.9. Pet. 36. Petitioner argues Kari teaches transmitting a value representative of each response stored within said handheld computing device by disclosing "the search terminal 1 starts transmission of the query message to the connection server 3" and "the search terminal 1 advantageously sends the information contained in the query form to the connection server 3." *Id.* at 35 (quoting

Ex. 1006, 8:16–19). Petitioner further argues Kari and Todd teach storing the query message. *Id.* at 35–36. According to Petitioner, Kari teaches the content of the query message includes the data entered in, for example, Car, GasType, and SearchWords fields. *Id.* at 36 (citing Ex. 1006, 10:20–43). Petitioner argues this data corresponds to values representative of responses, and thus, the query message includes a value representative of each of said at least one response. *Id.* Petitioner further argues that Kari describes sending the information to the connection server 3, and, therefore, teaches transmitting that information to the recipient computer. *Id.* Petitioner's arguments are supported by the testimony of Dr. Reddy. Ex. 1005 ¶¶ 143–146. Patent Owner presents no counterargument. PO Resp. 18–26.

After reviewing the parties' evidence and arguments, we find Petitioner has proven that Kari teaches limitation 19.9.

> *[19.10] (g) after receipt of said transmission of step (f), transmitting a notice of said received value representative of each of said at least one response to a second user.*

Petitioner argues Kari teaches limitation 19.10. Pet. 36–38. Petitioner notes that Kari teaches "that 'the query message sent from the search terminal 1 is processed in the connection server 3 . . . . Next, the connection server 3 transmits the information of the query message to the remote server 4, 4', 4" selected . . . .'" *Id.* at 36 (quoting Ex. 1006, 8:20–27). Petitioner argues an ordinarily skilled artisan would have understood Kari's step of sending the information of the query message to the remote server to be for the benefit of a user of the remote server, so that user can review the information in the query message. *Id.* at 37 (citing Ex. 1009, 15:45-46). Accordingly, Petitioner argues, an ordinarily skilled artisan would have understood Kari to teach transmitting a notice of said received value

representative of each of said at least one response to a second user. *Id.* at 36–37. Petitioner's arguments are supported by the testimony of Dr. Reddy. Ex. 1005 ¶¶ 147–151. Patent Owner presents no counterargument. PO Resp. 18–26.

After reviewing the parties' evidence and arguments, we find Petitioner has proven that Kari teaches limitation 19.10.

*b. Patent Owner's Additional Arguments Regarding Petitioner's Showing for Claim 19*

*i. Purported Lack of a Device Independent Implementation of Kari's Invention*

Patent Owner argues that "Kari's invention was not implemented in a device independent manner and there was no motivation for an [ordinarily skilled artisan] to take that step in solving the problems of the [challenged] patent absent hindsight." PO Resp. 21. Patent Owner argues that Kari might have used HTML for form generation purposes but "Kari's approach would also need access to system specific routines to implement many of the steps listed in Figs. 3A and 3B of that reference (EX1006) . . . ." *Id.* at 21–22. Patent Owner further argues that an ordinarily skilled artisan "would get no guidance as to how to do that in a device independent manner from Kari or any of the other references of record." *Id.* at 22. Further, Patent Owner also repeats its argument that the cited art does not teach limitation 19.7, which we addressed above. *Id.*

In addition, Patent Owner argues that "[t]he only mention of device independence by Petitioner is offered in connection with Darnell, which teaches the use of HTML 4 and its browser." PO Resp. 22. Patent Owner continues: "However, a standard HTML 4 browser is show[n] above to be unsuitable for use with devices such as GPS receivers if the desire is to

maintain device independence." *Id.* Further, Patent Owner argues that "[n]o reference of record suggests developing an OIS [operating instruction system] which would make it possible to use a device independent tokenized questionnaire on multiple devices without change." *Id.* at 23. Patent Owner continues, arguing that reliance on Kari as a base reference fails because an ordinarily skilled artisan in possession of that reference "would have no reason to expend the effort to develop and distribute an entire OIS that would run on a plurality of different platforms so that the functions necessary to practice Kari's invention could be implemented in a form that was truly device independent." *Id.* Patent Owner argues, as a result, that claim 19 would not have been obvious over the asserted prior art. *Id.* Patent Owner provides the testimony of Dr. Hale to support its arguments. Ex. 2006 ¶¶ 18–19, 38.

In reply, Petitioner argues that Kari teaches using GPS to automatically obtain location identifying information in response to a question from a tokenized questionnaire comprising a plurality of device independent tokens. Pet. Reply 9–10. Petitioner further argues that Patent Owner's remaining arguments are not pertinent because claim 19 does not require the device independence that Patent Owner argues is lacking in the prior art. *Id.* at 10. Petitioner's arguments are supported by the testimony of Dr. Reddy. Ex. 1021 ¶¶ 22–24.

We agree with Petitioner. First, as discussed above, we agree that Kari and Darnell teach using GPS to automatically obtain location identifying information in response to a question from a tokenized questionnaire comprising a plurality of device independent tokens. *See* discussions of limitation 19.7 above, and for context, the above discussions

of limitations 19.2.1–19.2.3. Second, Patent Owner's other arguments regarding device independence are not pertinent because they are not directed to any claim limitation. Patent Owner identifies no claim limitation that these arguments relate to, and we see none. Claim 19 does not recite that every claimed step must be performed using only device independent software. As discussed above, only limitation 19.2.3 recites device independence and only with respect to tokens.

*ii. Purported Lack of Motivation to Modify Kari to Make It Device Independent and Purported Lack of Teaching in in Darnell, Chan, and Todd of Device Independence*

Patent Owner argues that an ordinarily skilled artisan would not have been motivated to change Kari's embodiments to implement them in a device independent manner. PO Resp. 21–23. Patent Owner also argues that Darnell, Chan, and Todd do not teach or suggest modifying Kari's embodiments to become device independent. *Id.* at 23–24. As discussed above, the only requirement in claim 19 for device independence is the recitation in limitation 19.2.3 of a tokenized questionnaire comprising a plurality of device independent tokens. For the reasons given above, we find that Kari and Darnell teach the device independent token limitation, and that an ordinarily skilled artisan would have combined the pertinent teachings of those references. Patent Owner's arguments about whether an ordinarily skilled artisan would have modified Kari to achieve other forms of device independence or whether Darnell, Chan, and Todd teach such modifications are not relevant because the arguments are not commensurate in scope with claim 19.

*c. Patent Owner's Arguments Regarding the Reliability of Dr. Reddy's Testimony*

*i. Purported Assumption that the Nokia 9000 Uses HTML 4*

Patent Owner argues that Dr. Reddy's testimony is unreliable because Dr. Reddy assumed that Kari's teachings of a query form could be combined with Darnell's teaching of HTML 4. PO Resp. 11. Citing the testimony of Dr. Hale, Patent Owner argues that the Nokia 9000, which is described in Kari, was not HTML 4 compliant. PO Resp. 11–12 (citing Ex. 2006 ¶¶ 29–31, Ex. 2009, 1-8). Petitioner responds that Patent Owner's arguments are erroneously premised on the proposition that Kari's disclosure is limited to the use of Nokia 9000 Communicator without modification. Pet. Reply 3.

We agree with Petitioner because, as discussed above, Kari does not limit its search terminal 1 to only the Nokia 9000 Communicator. Kari merely describes the Nokia 9000 Communicator as "[a] device suitable for the search terminal 1." Ex. 1006, 3:16–17. And Dr. Reddy does not rely on the Nokia 9000 Communicator to establish any limitation through inherency. Instead, Dr. Reddy addresses what Kari and Darnell would have taught an ordinarily skilled artisan. *See, e.g.*, Ex. 1005 ¶¶ 103–109. As discussed above, we do not find error in, and we credit, Dr. Reddy's analysis of those teachings.

*ii. Argument that the Nokia 9000 Browser Could not Read GPS Information*

Patent Owner argues Dr. Reddy erred in testifying that the browser in Kari can read automatically the information on the location of the device by using GPS equipment. PO Resp. 12–13. Patent Owner argues that testimony is erroneous because (i) Dr. Reddy relied on Darnell to support his testimony when the Nokia 9000 Communicator did not support HTML 4,

and (ii) even an HTML 4 form in a standard browser could not read GPS locations from a GPS receiver. *Id.* (citing Ex. 2006 ¶¶ 29–31, 33–35). As discussed above, we disagree with Patent Owner's argument that an ordinarily skilled artisan would not have consulted Darnell because the Nokia 9000 Communicator only supported HTML 2.

We also disagree with Patent Owner's argument that Kari does not teach that its browser can read location information using GPS equipment. Kari describes a web browser as an application program: "[o]ne application program which has recently gained popularity is the web browser…" Ex. 1006, 3:37–38. Kari specifically discloses that its "application program *reads automatically* the information on the location . . . [and] the information on the location can be determined e.g. by using GPS equipment." Ex. 1006, 7:60–64 (emphasis added). Although Dr. Hale testifies that even an HTML 4 form in a standard browser could not read GPS locations from a GPS receiver, we accord that testimony little weight for two reasons. Ex. 2006 ¶¶ 33–35. First, Dr. Hale provides no support for that testimony. *Id.*; *see In re Acad. of Sci. Tech Ctr.*, 367 F.3d 1359, 1368 (Fed. Cir. 2004) ("[T]he Board is entitled to weigh the declarations and conclude that the lack of factual corroboration warrants discounting the opinions expressed in the declarations."); *see also* 37 C.F.R. § 42.65(a) ("Expert testimony that does not disclose the underlying facts or data on which the opinion is based is entitled to little or no weight."). Second, Dr. Hale's testimony does not specifically address the browser and application program taught in Kari. Whether a standard browser would read GPS information is irrelevant when Kari specifically discloses that its browser

reads this information, and Dr. Hale provides no evidence or rationale why Kari's browser had to be standard. Ex. 2006 ¶¶ 33–35.

*iii. Purported Use of Device Dependent Software to Read Information from a GPS Receiver in Kari*

Patent Owner argues that Kari would have to use device dependent software to read GPS information in connection with an HTML compliant form. PO Resp. 13–15. Patent Owner argues that Kari therefore could not have an HTML form/browser combination that both had device independent tokens and acquired GPS information from a GPS device. *Id.* at 14–15 (citing Ex. 2006 ¶¶ 36–37.) As a result, Patent Owner argues Dr. Reddy's testimony about Kari and Darnell, device independent tokens, and GPS is unreliable. *Id.* We disagree with Patent Owner for two reasons. First, its arguments rest solely on the testimony of Dr. Hale, who provides no support for that testimony. Ex. 2006 ¶¶ 36–37; *see* also Ex. 1021 ¶ 20; Ex. 1007, 240. Second, claim 19 does not exclude the use of device dependent software for reading GPS information from a GPS device. The only requirement of device independence in claim 19 is that the questionnaire comprises a plurality of device independent tokens. Nothing in the claim precludes a browser from using or translating those device independent tokens into a command for device specific software to retrieve GPS information. *See* Ex. 1021 ¶¶ 22–27.

*iv. Kari's Use in a Loosely Networked Environment*

Patent Owner argues that Dr. Reddy "fails to recognize that neither HTML 2 nor HTML 4 had a robust capability to handle network outages in a loosely networked environment as is required by every claim of the instant patent and preferred by Kari." PO Resp. 15–16 (citing Ex. 2006 ¶¶ 40, 43–44). And Dr. Hale testifies: "[t]here was no capability in standard HTML 2

or 4 to sense a network outage and take alternative action, e.g., loop and retest until the network connection was available again as is required in Kari's Fig. 3B, boxes 312, 313, and 315 . . . ." Ex. 2006 ¶ 41.

We are not persuaded by Patent Owner's argument and Dr. Hale's related testimony for several reasons. First, Patent Owner has not identified a claim limitation that requires a loosely networked environment. PO Resp. 15–16. None of the challenged claims recite a "loose network" or even a "network." Second, Patent Owner provides no rationale why Petitioner's combination HTML 2 or 4 would have to handle a network outage and take alternative action. Dr. Reddy does not testify that all software in the proposed combination of Kari and Darnell utilizes HTML. Dr. Reddy only testifies that, in his proposed combination, Kari's query form would use HTML. Ex. 1005 ¶¶ 91–99, 103–109. As Dr. Hale indicates, Kari itself describes an algorithm for handling a network connection outage (*see* Kari Figure 3B). Ex. 2006 ¶ 41. Further, Dr. Hale provides no rationale why that algorithm would have to be implemented with HTML, and no such reason is apparent. *Id.* Finally, Dr. Hale's testimony lacks support. *Id.*

*v. "Hidden Questions"*

Patent Owner argues that "Dr. Reddy has failed to explain exactly how an HTML 2 or 4 form could use a 'hidden question' to acquire [GPS] information in a device independent manner." PO Resp. 17. Patent Owner also repeats its argument that "a standard HTML 2 or 4 browser is incapable of reading information from a GPS receiver." *Id.* (citing Ex. 2006 ¶ 32). Patent Owner additionally argues that if Petitioner "contends that Kari is actually using a machine specific application program separate from the browser, then the previous quote concedes that an HTML 4 form cannot read

a GPS receiver in a device independent manner . . . ." *Id.* at 17–18 (citing Ex. 2006 ¶ 36). These contentions are all premised on Patent Owner's thesis addressed above: that the claims require that an apparatus performing the method of claim 19 read the GPS receiver using only device independent software. Claim 19 has no such limitation. Therefore, we do not agree with these arguments for the reasons discussed above.

*vi. Conclusion*

In sum, we are not persuaded by any of Patent Owner's arguments alleging that Dr. Reddy's testimony is unreliable.[12]

*d. Conclusion Regarding Claim 19*

After reviewing the parties' arguments and evidence, we determine that Petitioner has proven by a preponderance of the evidence that claim 19 would have been obvious over Kari, Darnell, Chan, and Todd.

*4. Analysis of Claim 16*

Claim 16 and claim 19 recite many similar limitations, and for many of the limitations of claim 19, Petitioner relies on its showing for the corresponding limitations in claim 16. Similarly, for several limitations of claim 16, Patent Owner presents the same counterarguments as those for claim 19. We address the parties' arguments regarding each limitation of claim 16 below. We note that, for claim 16 and for the remaining challenged claims (17, 18, 21, and 22), the discussions in sections III.D.3.b. and III.D.3.c above are also applicable.

[12] Our analysis of these reliability arguments for claim 19 also applies to the other challenged claims.

*a. Limitations 16.0, 16.3, and 16.8*

As indicated in the table below, for the following limitations of claim 16, Petitioner relies exclusively on its showing for corresponding limitations in claim 19:

| Claim 16 Limitation | Cited Corresponding Limitation | Reference Alleged to Teach Limitation | Page References in Petition |
|---|---|---|---|
| 16.0 | 19.0 | Kari | 16, 38 |
| 16.3 | 19.3 | Kari | 27–28, 42 |
| 16.8 | 19.8 | Kari | 35, 44 |

Pet. 38, 42, 44.

Patent Owner presents no counterargument regarding limitations 16.0, 16.3, and 16.8. PO Resp. 26–28. As discussed above, Patent Owner also presents no counterarguments regarding limitation 19.0 and 19.3. Also, as addressed above, Patent Owner provides a counterargument regarding limitation 19.8, but we do not find that counterargument persuasive. Further, as discussed above, we find that Petitioner has proven that Kari teaches limitation 19.8.

After reviewing the parties' arguments and evidence, we find that Petitioner has proven that Kari teaches limitations 16.0, 16.3, and 16.8.

*b. Claim 16's Other Limitations*

*[16.1] (a) establishing communications between a handheld computing device and an originating computer, said handheld device having at least a capability to determine a current location thereof;*

For this limitation, Petitioner relies on its analysis of limitation 19.1, which Petitioner argues Kari and Chan teach. Pet. 16–20, 38. Further, Petitioner argues that Kari's disclosure of a search terminal using "satellite

location means (GPS)" teaches that Kari's search terminal has the capability to determine a current location. *Id.* at 38; *see also* Ex. 1006, 3:15–16 ("search terminal 1 can use satellite location means (GPS)"). Petitioner's arguments are supported by the testimony of Dr. Reddy. Ex. 1005 ¶¶ 153–155. Patent Owner presents no counterargument for limitations 16.1 or 19.1. PO Resp. 18–28. After reviewing the parties' arguments and evidence, we find that Petitioner has proven that Kari and Chan teach limitation 16.1.

*[16.2.1] (b) receiving within said handheld computing device a transmission of a tokenized questionnaire*

For this limitation, Petitioner relies on its analysis of limitation 19.2.1, which Petitioner argues Kari and Darnell teach. Pet. 21–24, 39. Similarly, Patent Owner relies on the same counterarguments it presented for claim 19 regarding a lack of teaching in the cited art of device independence of a tokenized questionnaire. PO Resp. 26–28. As discussed for claim 19, we are not persuaded by those arguments.

After reviewing the parties' arguments and evidence, we find that Petitioner has proven that Kari and Darnell teaches limitation 16.2.1.

*[16.2.2] including at least one question requesting GPS coordinates*

Petitioner relies on its analysis of limitation 19.2.2 for Kari's teaching of a questionnaire including at least one question requesting location identifying information. Pet. 39. With respect to requesting GPS coordinates as recited, Petitioner argues that Kari discloses obtaining location information from a GPS system, but Kari does not explicitly disclose requesting GPS coordinates. *Id.* Petitioner asserts, however, that Chan describes and depicts a form with at least one question requesting GPS coordinates. *Id.* at 39–40 (citing Ex. 1010, 6:6–9, Figure 5).

Further, Petitioner argues that Kari and Chan are analogous art and in the same field of endeavor because Kari and Chan are directed to systems and methods for receiving and fulfilling location-based queries. *Id.* at 40 (citing Ex. 1006, 2:20–23; 1010, 1:7–9). Petitioner further asserts that an ordinarily skilled artisan reading Kari would have been motivated to consider the teachings of Chan of explicitly requesting GPS coordinates because although Kari requests location information, an ordinarily skilled artisan would have recognized that requesting location information represented by GPS coordinates, as taught by Chan, would have provided a more "accurate search." *Id.* (citing Ex. 1010, 3:21–24). Also, Petitioner argues that Chan teaches that GPS coordinates as requested can be used "with navigation and routing applications" such as "real time navigation." *Id.* at 40–41 (citing Ex. 1010, 3:25–29). Petitioner further argues that an ordinarily skilled artisan would have recognized these benefits may not have been possible with forms of location, other than GPS, and, therefore, would be motivated to use Chan's teachings of requesting GPS coordinates. *Id.* at 41 (citing Ex. 1005, ¶ 159).

Petitioner further argues that combining the teachings of Kari and Chan would have been no more than the combination of prior art elements according to known methods because it would merely modify the Kari query form to specifically request GPS coordinates instead of more generalized location information. *Id.* Further, Petitioner asserts this combination would have produced predictable results (a query form that requested GPS coordinates) with a reasonable expectation of success. *Id.* Petitioner's arguments are supported by the testimony of Dr. Reddy. Ex. 1005 ¶¶ 157–160.

For this limitation, Patent Owner relies on the counterarguments it presented for claim 19 regarding a lack of teaching in the cited art of device independence of a tokenized questionnaire. PO Resp. 26–28. As discussed for claim 19, we are not persuaded by those counterarguments.

After reviewing the parties' arguments and evidence, we find that Petitioner has proven that Kari and Chan teach limitation 16.2.2, and that Petitioner's reason for combining the references is sufficient to support the legal conclusion of obviousness.

*[16.2.3] said tokenized questionnaire comprising a plurality of device independent tokens;*

For this limitation, Petitioner relies on its showing for limitation 19.2.3, which Petitioner argues Kari and Darnell teach. Pet. 24–27, 41. Petitioner also relies on the testimony set forth in paragraphs 161 to 162 of Dr. Reddy's original declaration (Ex. 1005). *Id.* at 42. Patent Owner presents no counterargument regarding limitation 16.2.3. PO Resp. 26–28. Patent Owner argues that an ordinarily skilled artisan would not have combined Kari and Darnell because Kari's device did not support HTML 4. *Id.* at 19. As discussed above, we disagree with that argument.

After reviewing the parties' arguments and evidence, we find that Petitioner has proven that Kari and Darnell teach limitation 16.2.3.

*[16.4] (d) after said communications has been terminated, when said handheld computing device is at said particular location*

For this limitation, Petitioner relies on its showing for limitation 19.4, which Petitioner argues Kari teaches. Pet. 28, 42. Although neither party requests that we construe the term "said particular location," Petitioner argues that, for this proceeding, the term "said particular location" should be interpreted as "a particular location" because claim 16 has no prior recitation

of "a particular location." *Id.* at 42. Further, Petitioner asserts that Kari teaches performing steps when its handheld computing device is at a particular location, quoting Kari that "[a]t the stage when the user wants to make a query, the WWW page is loaded . . . and the questionnaire is filled in . . . the query message is also provided with the location information, obtained e.g. from a GPS system." Ex. 1006, 13:59–14:30. Petitioner's arguments are supported by the testimony of Dr. Reddy. Ex. 1005 ¶¶ 164–167. Patent Owner provides no counterargument for limitations 16.4 or 19.4. PO Resp. 18–28.

After reviewing the parties' arguments and evidence, we find that Petitioner has proven that Kari teaches limitation 16.4.

Because limitation 16.4 must be read in combination with limitations 16.5, 16.6, and 16.7, we address the combinations of those limitations below.

> *[16.5] (d1) executing at least a portion of said plurality of tokens comprising said questionnaire on said handheld computing device to collect at least said current location of said handheld computing device; and;*

For this limitation, Petitioner relies upon its showing for limitation 19.5, which Petitioner argues Kari teaches. Pet. 28–29, 43. Petitioner notes that limitation 19.5 recites collecting at least one response from a first user, while claim limitation 16.5 recites collecting at least said current location of said handheld computing device. *Id.* at 43. Petitioner argues that Kari teaches collecting the current location by disclosing: "the application program reads automatically the information on the location . . . ." *Id.* (quoting Ex. 1006, 7:60–62). Petitioner also relies on the testimony of Dr. Reddy. Ex. 1005 ¶¶ 168–170. Patent Owner presents the same

counterarguments it presented for claim 19 regarding device independence. PO Resp. 26–28. We disagree with Patent Owner's counterarguments for the reasons discussed above.

After reviewing the parties' arguments and evidence, we find that Petitioner has proven that Kari teaches the combination of limitations 16.4 and 16.5.

*[16.6] (d2) storing within said handheld computing device said current location;*

For this limitation, Petitioner relies upon its showing for limitation 19.6, which Petitioner argues Kari and Todd teach. Pet. 29–33, 43–44. Petitioner notes that limitation 19.6 recites storing at least one response from the first user, while claim limitation 16.6 recites storing said current location. *Id.* at 43. Petitioner argues Todd describes a device which stores "all . . . of the survey response," which, in combination with Kari, would include the current location as described as set forth for limitation 16.5. *Id.* (citing Ex. 1009, Abstract). Petitioner's arguments are supported by testimony of Dr. Reddy. Ex. 1005 ¶¶ 171–173. Patent Owner provides no counterarguments for limitations 16.6 or 19.6. PO Resp. 18–28.

After reviewing the parties' arguments and evidence, we find that Petitioner has proven that Kari teaches the combination of limitations 16.4 and 16.6.

*[16.7] (d3) automatically entering the GPS coordinates into said questionnaire;*

For this limitation, Petitioner relies upon its showing for limitation 19.7, which Petitioner argues Kari teaches. Pet. 34, 44. Petitioner further argues that Kari teaches automatically entering the GPS coordinates into a questionnaire by stating "the application program reads automatically the

information on the location . . . by using GPS equipment." *Id.* at 44 (quoting Ex. 1006, 7:60–65). Petitioner also argues that Kari describes that the query message sent from the search terminal to the connection server includes, in one example, "Location= 'N60º22'30''E20º22'30'" which is "from the GPS system." *Id.* (quoting Ex. 1006, 10:7–25). Petitioner argues that an ordinarily skilled artisan would have understood N60º22'30''E20º22'30 are coordinates. *Id.* Petitioner's arguments are supported by the testimony of Dr. Reddy. Ex. 1005 ¶¶ 174–176. Patent Owner presents no counterargument for limitation 16.7. PO Resp. 26–28. As discussed above, Patent Owner presents counterarguments for limitation 19.7, which we do not find persuasive.

After reviewing the parties' arguments and evidence, we find that Petitioner has proven that Kari teaches the combination of limitations 16.4 and 16.7.

*[16.9] (f) transmitting at least one value representative of said stored current location to said recipient computer.*

For this limitation, Petitioner relies on its showing for limitation 19.9, which it argues Kari teaches. Pet. 35–36, 44. Petitioner asserts Kari describes "transmission of the query message to the connection server 3 . . ." *Id.* at 44–45 (quoting Ex. 1006, 8:16–19). Further, Petitioner argues that Kari's query message includes location information. *Id.* at 45 (citing Ex. 1006, 10:20–43, table). As a result, Petitioner argues Kari teaches transmitting at least one value representative of said stored current location to said recipient computer. *Id.* Petitioner's arguments are supported by the testimony of Dr. Reddy. Ex. 1005 ¶¶ 178–180. Patent Owner presents no counterargument for limitation 16.9 or 19.9. PO Resp. 18–28.

After reviewing the parties' arguments and evidence, we find that Petitioner has proven that Kari teaches limitation 16.9.

*c. Conclusion*

After reviewing the parties' arguments and evidence, we determine that Petitioner has proven by a preponderance of the evidence that claim 16 would have been obvious over Kari, Darnell, Chan, and Todd.

*5. Analysis of Claim 17*

Dependent claim 17 recites the method for managing data according to claim 16 and adds the limitation of "wherein said current location of said handheld computing device is determined using GPS." Petitioner argues Kari teaches this limitation because Kari "teaches that the 'information on the location can be determined e.g. by using GPS equipment . . . ." Pet. 45 (quoting Ex. 1006, 7:60–67). Petitioner's argument is supported by the testimony of Dr. Reddy. Ex. 1005 ¶¶ 181–183.

Patent Owner argues Petitioner "has failed to demonstrate that any of the prior art references of record teaches or suggests how this claim step might be implemented in a tokenized questionnaire in a device independent manner using HTML and a standard HTML 2 or 4 browser." PO Resp. 28. Patent Owner, however, does not identify any limitation added by claim 17 or in claim 16 that requires claim 17 be performed in a device independent manner, and we see none. *Id.*

After reviewing the parties' arguments and evidence, we determine that Petitioner has proven by a preponderance of the evidence that claim 17 would have been obvious over Kari, Darnell, Chan, and Todd.

*6. Analysis of Claim 18*

Dependent claim 18 recites the method for managing data according to claim 16 and adds the limitation of "wherein said originating computer and said recipient computer are a same computer." Petitioner argues Kari teaches this additional limitation because Kari's connection server 3 is both an originating computer and a recipient computer. Pet. 45–46. Petitioner's argument is supported by the testimony of Dr. Reddy. Ex. 1005 ¶¶ 184–186.

Patent Owner again argues Petitioner "has failed to demonstrate that any of the prior art references of record teaches or suggests how this claim step might be implemented in a tokenized questionnaire in a device independent manner using HTML and a standard HTML 2 or 4 browser . . . ." PO Resp. 28. Patent Owner, however, does not identify any limitation added by claim 18 or in claim 16 that requires claim 18 be performed in a device independent manner, and we see none. *Id.*

After reviewing the parties' arguments and evidence, we determine that Petitioner has proven by a preponderance of the evidence that claim 18 would have been obvious over Kari, Darnell, Chan, and Todd.

*7. Analysis of Claim 21*

We address the limitations of claim 21 below. Many of claim 21's limitations are similar to those recited by claims 16 and 19. For many of the limitations of claim 21, Petitioner relies upon its analysis of corresponding limitations in claims 16 or 19.

*a. Limitations 21.0, 21.2, 21.3.1, 21.3.3, 21.4–21.7, and 21.10–21.12*

For the limitations identified in the table below, Petitioner relies exclusively on its showing for corresponding limitations in claims 16 and 19 as indicated in the table:

| Claim 21 Limitation | Cited Corresponding Limitation | Reference(s) Alleged to Teach Limitation | Page References in Petition |
|---|---|---|---|
| 21.0 | 19.0 | Kari | 16, 46 |
| 21.2 | 19.1 | Kari and Chan | 16–20, 47 |
| 21.3.1 | 19.2.1 | Kari and Darnell | 21–24, 47–48 |
| 21.3.3 | 19.2.3 | Kari and Darnell | 24–27, 48 |
| 21.4 | 19.3 | Kari | 27–28, 48 |
| 21.5 | 19.4 | Kari | 28, 48 |
| 21.6 | 19.5 | Kari | 28–29, 48 |
| 21.7 | 16.7 | Kari | 33–34, 44, 48 |
| 21.10 | 19.6 | Kari and Todd | 29–33, 49 |
| 21.11 | 19.8 | Kari | 35, 49 |
| 21.12 | 19.9 | Kari | 35–36, 49 |

Pet. 46–49.

Of the above limitations, Patent Owner disputes that the asserted prior art teaches or suggests limitations 21.2, 21.3.1, 21.3.3, 21.7, and 21.11, asserting the same counterarguments Patent Owner presented for claim 19. PO Resp. 29–31. As discussed above, we disagree with those counterarguments. In addition, for limitation 21.7, Patent Owner argues "neither the HTML 2 nor the HTML 4 standard even provided any mechanism for importing or reading data into a form from a local source, where the source includes reading information from a file stored locally on hard disk or elsewhere." *Id.* at 30–31 (citing Ex. 2006 ¶¶ 35–36). Patent Owner argues that, as a result, limitation 21.7 could not be implemented with a standard HTML 2 or 4 browser and, thus, could not be implemented with device independent tokens. *Id.* at 31. For limitation 21.11, Patent

Owner also argues that if an ordinarily skilled artisan "were considering the claimed invention of the [challenged] patent, that individual would not be able to implement this step [21.11] in the manner taught by Kari in standard HTML 2 or 4, nor would there be any incentive for trying to do that in a device independent manner." *Id.* at 31–32.

Patent Owner's additional argument regarding limitation 21.7 is not pertinent because Petitioner does not rely upon HTML or device independent tokens for teaching limitation 21.7. Pet. 33–34, 44, 48. And no showing is required for HTML or device independent tokens because limitation 21.7 does not recite device independent tokens.

Petitioner's additional argument regarding limitation 21.11 is also not pertinent because Petitioner does not rely upon standard HTML for limitation 21.11 (Pet. 35, 49), and limitation 21.11 has no recitation requiring that it to be performed in a device independent manner.

After reviewing the parties' arguments and evidence, we find that Petitioner has proven that the cited prior art teaches limitation 21.0, 21.2, 21.3.1, 21.3.3, 21.4–21.7, and 21.10–21.12.

*b. The Remaining Limitations of Claim 21*

*[21.1] (a) within a central computer, accessing at least one user data item stored in a recipient computer, wherein said at least one data item is obtained via the steps of;*

Plaintiff argues Kari teaches limitation 21.1. Pet. 46–47. Dr. Reddy testifies that Kari's connection server 3 is a central computer. Ex. 1005 ¶ 189. Dr. Reddy further testifies that connection server 3 accesses at least one user data item by transmitting its query message to remote server 4, 4', 4". *Id.* (citing Ex. 1006, 12:32–36). According to Dr. Reddy, an ordinarily skilled artisan would understand that transmitting that query message

involves accessing that message. *Id.* Dr. Reddy further testifies that Kari's query message is a user data item because Kari "describes 'user-specified information . . . is added to the query message.'" *Id.* (quoting Ex. 1006, 11:31–33). Dr. Reddy also testifies that connection server 3 is also the recipient computer and that Kari teaches storing the query message into the connection server 3, citing Kari's disclosure of "[h]aving received the query message (block 401), the connection server 3 reads it into its memory (block 402) and store the message preferably for the time of its processing . . . ." *Id.* ¶ 190 (quoting Ex. 1006, 11:17–22). Dr. Reddy further testifies that connection server 3 obtains the query message via the steps recited by limitations 21.2 through 21.13. *Id.* at ¶ 191 (and in the paragraphs that follow in Ex. 1005). Patent Owner presents no counterargument for limitation 21.1. PO Resp. 29–32.

After reviewing the parties' arguments and evidence, we find that Petitioner has proven that Kari teaches limitation 21.1.

*[21.3.2] including at least one question requesting GPS coordinates and at least one additional question*

For this limitation, Petitioner relies on its analysis of limitation 16.2.2, which Petitioner argues Kari and Chan teach. Pet. 39–41, 48. In addition, Petitioner argues that Figure 7 of Kari shows that Kari's questionnaire includes at least one additional question (e.g., the user's desired search words). *Id.* (citing Ex. 1006, Fig. 7). Petitioner's arguments are supported by the testimony of Dr. Reddy. Ex. 1005 ¶¶ 195–197. Patent Owner provides no counterargument for limitation 21.3.2. PO Resp. 29–32. As discussed above, Patent Owner presents counterarguments for limitation 16.2.2, but we do not agree with those counterarguments.

After reviewing the parties' arguments and evidence, we find that Petitioner has proven that Kari and Chan teach limitation 21.3.2.

*[21.8] (iii) presenting said at least one additional question to a user;*

For this limitation, Petitioner relies on its analysis of limitation 19.5, which Petitioner argues Kari teaches. Pet. 28–29, 49. In addition, Petitioner argues that "Loading the WWW page with a browser, as described by Kari, teaches presenting said at least one additional question to a user, as the WWW page (e.g., FIG. 7 of Kari) includes all of the questions to which answers are solicited." Pet. 49 (citing Ex. 1006, 15:59–61). Petitioner's arguments are supported by the testimony of Dr. Reddy. Ex. 1005 ¶ 204.

Patent Owner provides no counterargument for limitations 19.5 or 21.8. PO Resp. 18–26, 29–32. After reviewing the parties' arguments and evidence, we find that Petitioner has proven that Kari teaches limitation 21.8.

*[21.9] (iv) receiving at least one response from the user to each of said presented at least one additional question,*

For this limitation, Petitioner relies on its analysis of limitation 19.5, which Petitioner argues Kari teaches. Pet. 28–29, 49. Petitioner further argues that Kari describes that its "questionnaire is filled in for the relevant parts," which Petitioner argues teaches receiving at least one response from the user to each of one additional question. *Id.* at 49 (quoting Ex. 1006, 15:59–61). Petitioner's arguments are supported by the testimony of Dr. Reddy. Ex. 1005 ¶ 206.

Patent Owner provides no counterargument for limitations 19.5 or 21.9. PO Resp. 18–26, 29–32. After reviewing the parties' arguments and evidence, we find that Petitioner has proven that Kari teaches limitation 21.9.

> *[21.13] (7) storing within said recipient computer any of said transmitted GPS coordinates and said at least one value representative of said at least one response, thereby creating said at least one user data item stored in said recipient computer; and,*

Petitioner argues Kari teaches limitation 21.13. Pet. 50. Dr. Reddy testifies that connection server 3 is a recipient computer that stores Kari's query message. Ex. 1005 ¶¶ 211–212. Further, Dr. Reddy testifies that Kari's query message includes a user identification. *Id.* at ¶ 211 (citing Ex. 1006, 10:20). Dr. Reddy further testifies that Kari describes placing the GPS location into the query message. *Id.* at ¶¶ 136, 137. Patent Owner presents no counterargument regarding this limitation. PO Resp. 29–32.

After reviewing the parties' arguments and evidence, we find that Petitioner has proven that Kari teaches limitation 21.13.

> *[21.14] (b) forming a visually perceptible report from any of said at least one stored user data item.*

Petitioner argues Todd teaches limitation 21.14. Pet. 50–51. Dr. Reddy testifies that, in Todd, "computer 32 is used to . . . store an analyze survey results"; those stored survey results are analogous to Kari's stored query messages; and Todd describes printing "reports summarizing the survey results." Ex. 1005 ¶ 214 (quoting Ex. 1009, 12:51–55). Further, Dr. Reddy testifies that an ordinarily skilled artisan would have understood that a printed report is a visually perceptible report. *Id.* Patent Owner presents no counterargument regarding this limitation. PO Resp. 29–32.

After reviewing the parties' arguments and evidence, we find that Petitioner has proven that Kari teaches limitation 21.14.

*c. Conclusion Regarding Claim 21*

After reviewing the parties' arguments and evidence, we determine that Petitioner has proven by a preponderance of the evidence that claim 21 would have been obvious over Kari, Darnell, Chan, and Todd.

*8. Analysis of Claim 22*

Claim 22 recites the method according to claim 21 with the additional limitation "wherein said central computer and said recipient computer are a same computer." Petitioner argues Kari teaches this additional limitation because Kari's connection server 3 is both a central computer and a recipient computer. Pet. 52. Petitioner's argument is supported by the testimony of Dr. Reddy. Ex. 1005 ¶ 220. Patent Owner provides no counterargument. PO Resp. 29–32.

After reviewing the parties' arguments and evidence, we determine that Petitioner has proven by a preponderance of the evidence that claim 22 would have been obvious over Kari, Darnell, Chan, and Todd.

## III. CONCLUSION

Petitioner has proven by a preponderance of the evidence that claims 16–19, 21, and 22 would have been obvious over Kari, Darnell, Todd, and Chan.

## IV. ORDER

Accordingly, it is:

ORDERED that claims 16–19, 21, and 22 of the challenged patent are unpatentable; and

FURTHER ORDERED that, because this is a Final Written Decision, parties to the proceeding seeking judicial review of the decision must comply with the notice and service requirements of 37 C.F.R. § 90.2.

FOR PETITIONER:

David W. O'Brien
Raghav Bajaj
Roshan Mansinghani
David L. McCombs
HAYNES AND BOONE, LLP
david.obrien.ipr@haynesboone.com
raghav.bajaj.ipr@haynesboone.com
roshan@unifiedpatents.com
david.mccombs.ipr@haynesboone.com

Jonathan Stroud
Jonathan Bowser
UNIFIED PATENTS INC.
jonathan@unifiedpatents.com
jbowser@unifiedpatents.com

FOR PATENT OWNER:

Terry L. Watt
CROWE & DUNLEVY
terry.watt@crowedunlevy.com

Matthew J. Antonelli
Michael E. Ellis
Larry D. Thompson, Jr.
Zachariah Harrington
ANTONELLI, HARRINGTON & THOMPSON LLP
matt@ahtlawfirm.com
michael@ahtlawfirm.com
zac@ahtlawfirm.com
larry@ahlawfirm.com