(19) Europäisches Patentamt
European Patent Office
Office européen des brevets

(11) EP 0 753 836 A2

(12) **EUROPEAN PATENT APPLICATION**

(43) Date of publication:
15.01.1997 Bulletin 1997/03

(51) Int. Cl.[6]: **G06T 15/00**, G06F 17/60

(21) Application number: **96111307.3**

(22) Date of filing: **12.07.1996**

(84) Designated Contracting States:
BE DE FR GB IT

(30) Priority: **12.07.1995 JP 175853/95**

(71) Applicant: **SONY CORPORATION**
Tokyo (JP)

(72) Inventor: **Rekimoto, Junichi,**
c/o Sony Corp.
Tokyo (JP)

(74) Representative: **Melzer, Wolfgang, Dipl.-Ing.**
Patentanwälte
Mitscherlich & Partner,
Sonnenstrasse 33
80331 München (DE)

(54) **A three-dimensional virtual reality space sharing method and system**

(57) A virtual reality space that can be shared by unspecified users world-wide is provided. When a URL is transmitted from a client terminal (10, 11, 12) via a network (15), a three-dimensional virtual reality space composed of only basic objects of which basic states do not change and the IP address of a shared server terminal (14) are sent from an information server and a mapping server to the transmitting client terminal. When the client terminal accesses the shared server (14) based on the received IP address, information associated with avatars (update objects) representing users of other client terminals (10, 11, 12) is transmitted from the shared server, displaying the virtual reality space reflecting the avatars on the client terminal. Consequently, the three-dimensional virtual reality space can be shared without changing the existing Internet.

F I G. 25

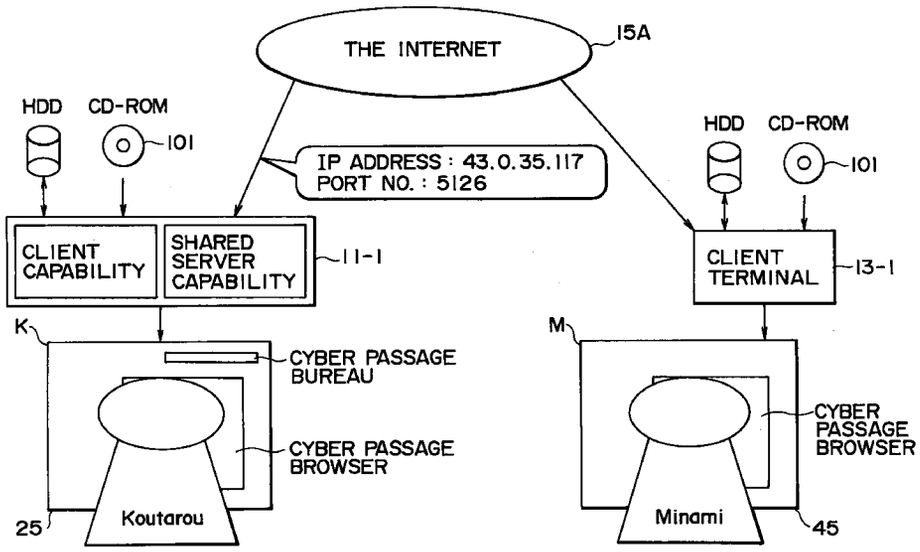

EP 0 753 836 A2

Printed by Rank Xerox (UK) Business Services
2.13.13/3.4

GOOGLE EXHIBIT 1007

Description

BACKGROUND OF THE INVENTION

The present invention relates to a method of sharing a three-dimensional virtual reality space, a system of sharing a three-dimensional virtual reality space, a method of information processing, an information recording medium, a method of information recording, an information transmission medium, a method of information transmission, a client terminal, and a shared server terminal and, more particularly, to the above-mentioned methods, systems, media, and terminals that can provide a three-dimensional virtual reality system to many and unspecified users on a worldwide scale for example.

A cyberspace service named Habitat (trademark) is known in the so-called personal computer communications services such as NIFTY-Serve (trademark) of Japan and CompuServe (trademark) of US in which a plurality of users connect their personal computers via modems and public telephone network to the host computers installed at the centers of the services to access them in predetermined protocols. Development of Habitat started in 1985 by Lucas Film of the US, operated by Quantum Link, one of US commercial networks, for about three years. Then, Habitat started its service in NIFTY-Serve as Fujitsu Habitat (trademark) in February 1990 . In Habitat, users can send their alter egos called avatars (the incarnation of a god figuring in the Hindu mythology) into a virtual city called Populopolis drawn by two-dimensional graphics to have a chat (namely, a realtime conversation based on text entered and displayed) with each other. For further details of Habitat, refer to the Japanese translation of "Cyberspace: First Steps," Michael Benedikt, ed., 1991, MIT Press Cambridge, MA, ISBN0-262-02327-X, the translation being published March 20, 1994, by NTT Publishing, ISBN4-87188-265-9C0010, pp. 282-307.

Now, referring to FIG. 35, an example of the constitution of a related art cyberspace system, which is provided by personal computer communications services, represented by above-mentioned Habitat is shown.

In the figure, a server terminal 1 has a storage device 2 to supply image data stored therein to client terminals 3-1 through 3-3 via a public telephone network 4.

Each of the client terminals 3-1 through 3-3 specifies, as a symbol representing the user of that terminal in a virtual three-dimensional space, a predetermined one of a plurality of avatars stored in the storage device 2 in advance. The user can move the specified avatar in the three-dimensional virtual reality space provided by the server terminal 1 to enjoy living a life in that space.

For example, the client terminal 3-1 accesses the server terminal 1 via the incorporated modem and the public telephone network 4 to receive an image of the virtual reality space. When, in the client terminal 3-1, a specific operation is performed to instruct its own avatar (for example, avatar A) to move in a specified direction, an image corresponding to the moving direction comes from the server terminal 1. This allows the client terminal 3-1 to move its own avatar through a town provided by the virtual reality space.

In the client terminal 3-2, too, its own avatar (for example, avatar B) may be specified in the same manner as mentioned above to move around in the virtual reality space.

If avatar A of the client terminal 3-1 and avatar B of the client terminal 3-2 have moved to positions closing facing each other in the virtual reality space, the server 1 provides not only the image of the town providing the background but also the image of avatar B moving around the town. This allows the client terminal 3-1 to display an image as shown in FIG. 36 for example. Namely, its own avatar A is located at the center of the screen with avatar B of the client terminal 3-2 located in its proximity.

Likewise, on the client terminal 3-2, an image as shown in FIG. 37 is provided. Namely, its own avatar B is located at the center of the screen with avatar A of the client terminal 3-1 located in its proximity.

Further, when, in the client terminal 3-3, its own avatar (for example, avatar C) is set to move the same in the proximity of avatar A and avatar B in the virtual reality space, an image in which avatars A through C are arranged is provided to the client terminals 3-1 through 3-3.

Thus, a change (for example, a change of avatar location or attribute or creation of a new object) added by any of the client terminals (3-1 through 3-3) to the virtual reality space is provided to the other client terminals, thereby implementing the sharing of the same virtual reality space among the users (namely, clients) of the client terminals 3-1 through 3-3.

The related art cyberspace system represented by above-mentioned Habitat operated in the above-mentioned personal communications services has a multi-user capability in which a plurality of users share the same virtual reality space displayed in two-dimensional graphics via the client terminals 3-1 through 3-3 to share the movement and the like of avatars of these users.

However, the related art multi-user capability is restricted to only specified users, not open to unspecified users. Namely, taking the above-mentioned Habitat for example, users are required first to purchases dedicated personal computer communications software, install the software program in their own personal computers (the client terminals 3-1 through 3-3), connected the personal computers to the host computer (the server terminal 1) via the modem and the public telephone network 4, and register themselves as members of Habitat by online sign-up. Only after the regis-

tration, they can access the virtual reality space. Therefore, the virtual reality space is available only to the registered members, excluding the unspecified users.

Moreover, in the related art cyberspace system represented by Habitat, a virtual street, a virtual room interior, and the like are drawn in two-dimensional graphics. In such an environment, movement of an avatar backward or forward is realized simply by moving it up or down in a two-dimensional background, providing poor representation for enabling the user to experience walk or movement in the virtual space. Because this scheme makes the user look at the virtual space in which the user's avatar and another user's avatar are shown from the viewpoint of a third person, the sense of pseudo experience is marred to a large extent. Therefore, realization of the walk-through capability has been awaited by the industry concerned, in which the virtual space is displayed in three-dimensional graphics and a user can walk freely in the virtual space from the viewpoint of an avatar, thus enhancing the sense of pseudo experience.

On the other hand, for a related art example for realizing the sharing of a three-dimensional virtual reality space on a network, a system of FIG. 38 is known which is constituted by client terminals 3-5 through 3-7 interconnected by the LAN (Local Area Network) installed in companies or laboratories.

First, all client terminals 3-5 through 3-7 read graphics data that describe the same three-dimensional space to display the same three-dimensional space. At this point of time, the three-dimensional spaces visually recognized by all users match each other.

Meanwhile, if, at a client terminal 3-5, the user changed positions of his avatar A from the position indicated by a dashed line to the position indicated by a solid line as shown in FIG. 38 for example, information about the change (or change information) is sent to client terminals 3-6 and 3-7 via a LAN, not shown. Then, based on the change information from the client terminal 3-5, display is changed at the client terminals 3-6 and 3-7.

Namely, as shown in FIG. 38, the change information about the positional change of avatar A at the client terminal 3-5 (in the example of FIG. 38, "Move Object to (10,20,30)") is sent to the client terminals 3-6 and 3-7, at which display of avatar A is changed from the position indicated by dashed line to the position indicated by solid line according to the change information. Thus, avatar A moved at the client terminal 3-5 is also moved at the client terminals 3-6 and 3-7.

Likewise, if a change is made to the virtual reality space at the client terminal 3-6 or 3-7 other than the client terminal 3-5, the change is reflected at the other client terminals, thus allowing the users of all client terminals to share the same virtual reality space.

It should be noted that an object representing an avatar, or an later ego of a user, can be moved in the virtual reality space, entered in it, and made exit from it; in other words, the avatar is changed in its states or the states are updated. So, such an object is appropriately called an update object hereinafter. On the other hand, an object representative of a building constituting a town in the virtual reality space is used commonly by a plurality of users and does not change in its basic state. Even if the building object changes, it changes autonomously, namely it changes independent of the operations made at client terminals. Such an object commonly used by a plurality of users is appropriately called a basic object hereinafter.

Meanwhile, it will be convenient if a shared virtual reality space such as mentioned above can be offered to not only specified users but also many and unspecified users on a worldwide scale.

In the related art cyberspace system such as Habitat operated by a personal computer communications service as shown in FIG. 35, access to the server terminal 1 is enabled by offering a telephone number for the online sign-up. However, unless the membership registration is made, no non-member users can share the two-dimensional virtual reality space, thus making the system unavailable to the unspecified users.

Further, since the accesses of all users concentrate on the same host computer (the server terminal 1), the number of users that can access the host computer at a time is limited. And as the number of users increases, the throughput of the host computer must be enhanced accordingly, requiring maintenance such as update of the system and server software.

In addition, the system of FIG. 38 constituted via the LAN is unavailable to unspecified users accessing from outside companies or laboratories. If the change information about objects such as avatars is transferred in a communication protocol shown in FIG. 38, it is required to know beforehand destination addresses of client terminals 3-5 through 3-7 of the users who share the three-dimensional virtual reality space. Therefore, although it is possible for the specified users, it is impossible for the unspecified users to obtain the addresses of the client terminals of all other others before hand to set the obtained addresses to their client terminals.

SUMMARY OF THE INVENTION

It is therefore an object of the present invention to provide a method of sharing a three-dimensional virtual reality space, a system of sharing a three-dimensional virtual reality space, a method of information processing, an information recording medium, a method of information recording, an information transmission medium, a method of information transmission, a client terminal, and a server terminal which allow unspecified users to share a three-dimensional virtual reality space without adding any change to the infrastructure of an existing network system (global communications network) connected world-wide.

In carrying out the invention and according to a first aspect thereof, there is provided a method of sharing a three-dimensional virtual reality space wherein three-dimensional graphics data associated with a basic object to be used by a plurality of users in a shared manner and an update object of which state is updated according to an operation performed by each of the plurality of users are acquired and a plurality of client terminals for displaying a three-dimensional virtual reality space are connected to a shared server terminal for controlling update data associated with update of the state of the update object notified from each of the plurality of client terminals via a global communication network interconnected with unspecified terminals; and, if the state of the update object in the three-dimensional virtual reality space is updated by any of the plurality of client terminals, the client terminal that made the update notifies the shared server terminal of update data associated with the update via the global communication network and the shared server terminal notifies the other client terminals of the plurality of client terminals of the update data about the update via the global communication network.

In carrying out the invention and according to a second aspect thereof, there is provided a system for sharing a three-dimensional virtual reality space wherein: three-dimensional graphics data associated with a basic object to be used by a plurality of users in a shared manner and an update object of which state is updated according to an operation performed by each of the plurality of users are acquired and a plurality of client terminals for displaying a three-dimensional virtual reality space are connected to a shared server terminal for controlling update data associated with update of the state of the update object notified from each of the plurality of client terminals via a global communication network interconnected with unspecified terminals; and, if the state of the update object in the three-dimensional virtual reality space is updated by any of the plurality of client terminals, the client terminal that made the update notifies the shared server terminal of update data associated with the update via the global communication network and the shared server terminal notifies the other client terminals of the plurality of client terminals of the update data about the update via the global communication network.

In carrying out the invention and according to a third aspect thereof, there is provided an information recording medium for use in a system for sharing a three-dimensional virtual reality space, the information recording medium recording a computer program comprising the steps of: acquiring three-dimensional graphics data associated with a basic object to be used by a plurality of users in a shared manner and an update object of which state is updated according to an operation performed by each of the plurality of users and connecting a plurality of client terminals for displaying a three-dimensional virtual reality space to a shared server terminal for controlling update data associated with update of the state of the update object notified from each of the plurality of client terminals via a global communication network interconnected with unspecified terminals; and, if the state of the update object in the three-dimensional virtual reality space is updated by any of the plurality of client terminals, notifying the shared server terminal of update data associated with the update via the global communication network and notifying the other client terminals of the plurality of client terminals of the update data about the update from the shared server terminal via the global communication network; wherein the computer program is readable and executable by at least one of the client terminal and the shared server terminal.

In carrying out the invention and according to a fourth aspect thereof, there is provided an information recording method for use in a system for sharing a three-dimensional virtual reality space, the information recording method recording a computer program on a recording medium, the computer program comprising the steps of: acquiring three-dimensional graphics data associated with a basic object to be used by a plurality of users in a shared manner and an update object of which state is updated according to an operation performed by each of the plurality of users and connecting a plurality of client terminals for displaying a three-dimensional virtual reality space to a shared server terminal for controlling update data associated with update of the state of the update object notified from each of the plurality of client terminals via a global communication network interconnected with unspecified terminals; and, if the state of the update object in the three-dimensional virtual reality space is updated by any of the plurality of client terminals, notifying the shared server terminal of update data associated with the update via the global communication network and notifying the other client terminals of the plurality of client terminals of the update data about the update from the shared server terminal via the global communication network; wherein the computer program is readable and executable by at least one of the client terminal and the shared server terminal.

In carrying out the invention and according to a fifth aspect thereof, there is provided an information transmission medium for use in a system for sharing a three-dimensional virtual reality space, said information transmission medium transmitting a computer program comprising the steps of: acquiring three-dimensional graphics data associated with a basic object to be used by a plurality of users in a shared manner and an update object of which state is updated according to an operation performed by each of the plurality of users and connecting a plurality of client terminals for displaying a three-dimensional virtual reality space to a shared server terminal for controlling update data associated with update of the state of the update object notified from each of the plurality of client terminals via a global communication network interconnected with unspecified terminals; and, if the state of the update object in the three-dimensional virtual reality space is updated by any of the plurality of client terminals, notifying the shared server terminal of update data associated with the update via the global communication network and notifying the other client terminals of the plurality of client terminals of the update data about the update from the shared server terminal via the global communica-

tion network; wherein the computer program is receivable and executable by at least one of the shared server terminal and the client terminal and transmitted to at least one of the shared server terminal and the client terminal.

In carrying out the invention and according to a sixth aspect thereof, there is provided an information transmission method for use in a system for sharing a three-dimensional virtual reality space, said information transmission method transmitting a computer program comprising the steps of: acquiring three-dimensional graphics data associated with a basic object to be used by a plurality of users in a shared manner and an update object of which state is updated according to an operation performed by each of the plurality of users and connecting a plurality of client terminals for displaying a three-dimensional virtual reality space to a shared server terminal for controlling update data associated with update of the state of the update object notified from each of the plurality of client terminals via a global communication network interconnected with unspecified terminals; and, if the state of the update object in the three-dimensional virtual reality space is updated by any of the plurality of client terminals, notifying the shared server terminal of update data associated with the update via the global communication network and notifying the other client terminals of the plurality of client terminals of the update data about the update from the shared server terminal via the global communication network; wherein the computer program is receivable and executable by at least one of the shared server terminal and the client terminal and transmitted to at least one of the shared server terminal and the client terminal.

In carrying out the invention and according to a seventh aspect thereof, there is provided an information processing method for a plurality of client terminals in a system for sharing a three-dimensional virtual reality space, the plurality of client terminals being provided in a system for sharing the three-dimensional virtual reality space to acquire three-dimensional graphics data associated with a basic object to be used by a plurality of users in a shared manner and an update object of which state is updated according to an operation performed by each of the plurality of users to display the three-dimensional virtual reality space and being connected to a shared server terminal for controlling update data associated with update of the state of the update object notified from each of the plurality of client terminals via a global communication network interconnected with unspecified terminals, the information processing method comprising the steps of: acquiring the three-dimensional graphics data associated with the basic object and the update object; drawing the three-dimensional virtual reality space having space coordinates specified by a user based on the acquired three-dimensional graphics data and displaying the drawn three-dimensional virtual reality space on a display device; acquiring the update data from the shared server terminal via the global communication network; updating the state of the update object to be displayed on the display device based on the acquired update data; and if the state of the update object has been updated according to the operation of the user, notifying the shared server terminal of update data associated with the update via the global communication network.

In carrying out the invention and according to a ninth aspect thereof, there is provided a client terminal in a three-dimensional virtual reality space sharing system, the client terminal being one of a plurality of client terminals for acquiring three-dimensional graphics data associated with a basic object to be used by a plurality of users in a shared manner and an update object of which state is updated according to an operation performed by each of the plurality of users to display the three-dimensional virtual reality space and being connected to a shared server terminal for controlling update data associated with update of the state of the update object notified from each of the plurality of client terminals via a global communication network interconnected with unspecified terminals, the client terminal comprising: an acquiring graphics data means for acquiring the three-dimensional graphics data associated with the basic object and the update object; a drawing means for drawing the three-dimensional virtual reality space having space coordinates specified by a user based on the acquired three-dimensional graphics data and displaying the drawn three-dimensional virtual reality space on a display device; an acquiring update data means for acquiring the update data from the shared server terminal via the global communication network; an updating means for updating the state of the update object to be displayed on the display device based on the acquired update data; and if the state of the update object has been updated according to the operation of the user, a notifying update data means for notifying the shared server terminal of update data associated with the update via the global communication network.

In carrying out the invention and according to a tenth aspect thereof, there is provided an information recording medium for use in a client terminal in a three-dimensional virtual reality space sharing system, the client terminal being one of a plurality of client terminals for acquiring three-dimensional graphics data associated with a basic object to be used by a plurality of users in a shared manner and an update object of which state is updated according to an operation performed by each of the plurality of users to display the three-dimensional virtual reality space and being connected to a shared server terminal for controlling update data associated with update of the state of the update object notified from each of the plurality of client terminals via a global communication network interconnected with unspecified terminals, the information recording medium recording a computer program in a state readable and executable by the client terminal, the computer program comprising the steps of: acquiring the three-dimensional graphics data associated with the basic object and the update object; drawing the three-dimensional virtual reality space having space coordinates specified by a user based on the acquired three-dimensional graphics data and displaying the drawn three-dimensional virtual reality space on a display device; acquiring the update data from the shared server terminal via the global communication network; updating the state of the update object to be displayed on the display device based on the acquired update data; and if the state of the update object has been updated according to the operation of the user,

notifying the shared server terminal of update data associated with the update via the global communication network.

In carrying out the invention and according to an eleventh aspect thereof, there is provided an information recording method for use in a client terminal in a three-dimensional virtual reality space sharing system, the client terminal being one of a plurality of client terminals for acquiring three-dimensional graphics data associated with a basic object to be used by a plurality of users in a shared manner and an update object of which state is updated according to an operation performed by each of the plurality of users to display the three-dimensional virtual reality space and being connected to a shared server terminal for controlling update data associated with update of the state of the update object notified from each of the plurality of client terminals via a global communication network interconnected with unspecified terminals, the information recording method recording a computer program in an information recording medium in a state readable and executable by the client terminal, the computer program comprising the steps of: acquiring the three-dimensional graphics data associated with the basic object and the update object; drawing the three-dimensional virtual reality space having space coordinates specified by a user based on the acquired three-dimensional graphics data and displaying the drawn three-dimensional virtual reality space on a display device; acquiring the update data from the shared server terminal via the global communication network; updating the state of the update object to be displayed on the display device based on the acquired update data; and if the state of the update object has been updated according to the operation of the user, notifying the shared server terminal of update data associated with the update via the global communication network.

In carrying out the invention and according to a twelfth aspect thereof, there is provided an information transmission medium for use in a client terminal in a three-dimensional virtual reality space sharing system, the client terminal being one of a plurality of client terminals for acquiring three-dimensional graphics data associated with a basic object to be used by a plurality of users in a shared manner and an update object of which state is updated according to an operation performed by each of the plurality of users to display the three-dimensional virtual reality space and being connected to a shared server terminal for controlling update data associated with update of the state of the update object notified from each of the plurality of client terminals via a global communication network interconnected with unspecified terminals, the information transmission medium transmits a computer program to the client terminal in a state receivable and executable by the same, the computer program comprising the steps of: acquiring the three-dimensional graphics data associated with the basic object and the update object; drawing the three-dimensional virtual reality space having space coordinates specified by a user based on the acquired three-dimensional graphics data and displaying the drawn three-dimensional virtual reality space on a display device; acquiring the update data from the shared server terminal via the global communication network; updating the state of the update object to be displayed on the display device based on the acquired update data; and if the state of the update object has been updated according to the operation of the user, notifying the shared server terminal of update data associated with the update via the global communication network.

In carrying out the invention and according to a thirteenth aspect thereof, there is provided an information transmission method for use in a client terminal in a three-dimensional virtual reality space sharing system, the client terminal being one of a plurality of client terminals for acquiring three-dimensional graphics data associated with a basic object to be used by a plurality of users in a shared manner and an update object of which state is updated according to an operation performed by each of the plurality of users to display the three-dimensional virtual reality space and being connected to a shared server terminal for controlling update data associated with update of the state of the update object notified from each of the plurality of client terminals via a global communication network interconnected with unspecified terminals, the information transmission method transmitting a computer program to the client terminal in a state receivable and executable by the same, the computer program comprising the steps of: acquiring the three-dimensional graphics data associated with the basic object and the update object; drawing the three-dimensional virtual reality space having space coordinates specified by a user based on the acquired three-dimensional graphics data and displaying the drawn three-dimensional virtual reality space on a display device; acquiring the update data from the shared server terminal via the global communication network; updating the state of the update object to be displayed on the display device based on the acquired update data; and if the state of the update object has been updated according to the operation of the user, notifying the shared server terminal of update data associated with the update via the global communication network.

In carrying out the invention and according to a fourteenth aspect thereof, there is provided an information processing method for a shared server terminal in a three-dimensional virtual reality space sharing system wherein a plurality of client terminals for acquiring three-dimensional graphics data associated with a basic object to be used by a plurality of users in a shared manner and an update object of which state is updated according to an operation performed by each of the plurality of users to display the three-dimensional virtual reality space are connected to the shared server terminal for controlling update data associated with update of the state of the update object notified from each of the plurality of client terminals via a global communication network interconnected with unspecified terminals, the information processing method comprising the steps of: if the state of the update object has been updated according to the operation of a user of any of the plurality of client terminals, acquiring update data associated with the update from the client terminal via the global communication network; and notifying the other client terminals of the acquired update

data via the global communication network.

In carrying out the invention and according to a fifteenth aspect thereof, there is provided a shared server terminal in a three-dimensional virtual reality space sharing system wherein a plurality of client terminals for acquiring three-dimensional graphics data associated with a basic object to be used by a plurality of users in a shared manner and an update object of which state is updated according to an operation performed by each of the plurality of users to display the three-dimensional virtual reality space are connected to the shared server terminal for controlling update data associated with update of the state of the update object notified from each of the plurality of client terminals via a global communication network interconnected with unspecified terminals, the shared server terminal comprising: if the state of the update object has been updated according to the operation of a user of any of the plurality of client terminals, an acquiring update data means for acquiring update data associated with the update from the client terminal via the global communication network; and a notifying update data means for notifying the other client terminals of the acquired update data via the global communication network.

In carrying out the invention and according to a sixteenth aspect thereof, there is provided an information recording medium for use in a shared server terminal in a three-dimensional virtual reality space sharing system wherein a plurality of client terminals for acquiring three-dimensional graphics data associated with a basic object to be used by a plurality of users in a shared manner and an update object of which state is updated according to an operation performed by each of the plurality of users to display the three-dimensional virtual reality space are connected to the shared server terminal for controlling update data associated with update of the state of the update object notified from each of the plurality of client terminals via a global communication network interconnected with unspecified terminals, the information recording medium recording a computer program in a state readable and executable by the shared server terminal, the computer program comprising the steps of: if the state of the update object has been updated according to the operation of a user of any of the plurality of client terminals, acquiring update data associated with the update from the client terminal via the global communication network; and notifying the other client terminals of the acquired update data via the global communication network.

In carrying out the invention and according to a seventeenth aspect thereof, there is provided an information recording method for use in a shared server terminal in a three-dimensional virtual reality space sharing system wherein a plurality of client terminals for acquiring three-dimensional graphics data associated with a basic object to be used by a plurality of users in a shared manner and an update object of which state is updated according to an operation performed by each of the plurality of users to display the three-dimensional virtual reality space are connected to the shared server terminal for controlling update data associated with update of the state of the update object notified from each of the plurality of client terminals via a global communication network interconnected with unspecified terminals, the information recording method recording a computer program in an information recording medium in a state readable and executable by the shared server terminal, the computer program comprising the steps of: if the state of the update object has been updated according to the operation of a user of any of the plurality of client terminals, acquiring update data associated with the update from the client terminal via the global communication network; and notifying the other client terminals of the acquired update data via the global communication network.

In carrying out the invention and according to an eighteenth aspect thereof, there is provided an information transmission medium for use in a shared server terminal in a three-dimensional virtual reality space sharing system wherein a plurality of client terminals for acquiring three-dimensional graphics data associated with a basic object to be used by a plurality of users in a shared manner and an update object of which state is updated according to an operation performed by each of the plurality of users to display the three-dimensional virtual reality space are connected to the shared server terminal for controlling update data associated with update of the state of the update object notified from each of the plurality of client terminals via a global communication network interconnected with unspecified terminals, the information transmission medium transmitting a computer program in a state readable and executable by the shared server terminal to the same, the computer program comprising the steps of: if the state of the update object has been updated according to the operation of a user of any of the plurality of client terminals, acquiring update data associated with the update from the client terminal via the global communication network; and notifying the other client terminals of the acquired update data via the global communication network.

In carrying out the invention and according to a nineteenth aspect thereof, there is provided an information transmission method for use in a shared server terminal in a three-dimensional virtual reality space sharing system wherein a plurality of client terminals for acquiring three-dimensional graphics data associated with a basic object to be used by a plurality of users in a shared manner and an update object of which state is updated according to an operation performed by each of the plurality of users to display the three-dimensional virtual reality space are connected to the shared server terminal for controlling update data associated with update of the state of the update object notified from each of the plurality of client terminals via a global communication network interconnected with unspecified terminals, the information transmission method transmitting a computer program to the shared server terminal in a state readable and executable by the same, the computer program comprising the steps of: if the state of the update object has been updated according to the operation of a user of any of the plurality of client terminals, acquiring update data associated with the update from the client terminal via the global communication network; and notifying the other client terminals

of the acquired update data via the global communication network.

According to the present invention, in the three-dimensional virtual reality sharing method, the system, the information recording, the information recording method, the information transmission medium, and the information transmission method, if the state of an update object is updated by a client terminal, the update data about the update done are sent from the shared server terminal to the other client terminals via a global communication network.

Further, according to the present invention, in the information processing method, the client terminal, the information recording medium, the information recording method, the information transmission medium, and the information transmission method, data about an update object are retrieved from the shared server terminal and, at the same time, when the state of an update object is updated, the update data about the update done are sent to the shared server terminal.

Further, according to the present invention, in the information processing method, the server terminal, the information recording medium, the information recording method, the information transmission medium, and the information transmission method, if the shared server terminal receives update data about the update of the state of update object from a client terminal, the shared server terminal sends the received update data to the other client terminals.

The above and other objects, features and advantages of the present invention will become more apparent from the accompanying drawings, in which like reference numerals are used to identify the same or similar parts in several views.

BRIEF DESCRIPTION OF THE DRAWINGS

FIG. 1 is a block diagram illustrating a cyberspace system practiced as one preferred embodiment of the invention;
FIG. 2 describes WWW (World Wide Web);
FIG. 3 is a diagram illustrating an example of a URL (Uniform Resource Locator);
FIG. 4 is a block diagram illustrating an example of the constitution of an information server terminal of FIG. 1;
FIG. 5 is a block diagram illustrating an example of the constitution of a shared server terminal of FIG. 1;
FIG. 6 is a block diagram illustrating an example of the constitution of a mapping server terminal of FIG. 1;
FIG. 7 is a block diagram illustrating an example of the constitution of a client terminal of FIG. 1;
FIG. 8 is a block diagram illustrating an example of the constitution of a server provider terminal of FIG. 1;
FIG. 9 describes a virtual reality space formed by the cyberspace system of FIG. 1;
FIG. 10 describes a view field seen from avatar C of FIG. 9;
FIG. 11 describes a view field seen from avatar D of FIG. 9;
FIG. 12 describes an allocated space of a part of the cyberspace of FIG. 1;
FIG. 13 describes a view field seen from avatar C of FIG. 12;
FIG. 14 describes a view field seen from avatar F of FIG. 12;
FIG. 15 is a flowchart describing operations of the client terminal (the service provider terminal) of FIG. 1;
FIG. 16 is a flowchart describing operations of the information server terminal of FIG. 1;
FIG. 17 is a flowchart describing operations of the mapping server terminal of FIG. 1;
FIG. 18 is a flowchart describing operations of the shared server terminal of FIG. 1;
FIG. 19 describes a communication protocol for the communication between the client terminal, the information server terminal, the shared server terminal, and the mapping server terminal of FIG. 1;
FIG. 20 describes the case in which a plurality of shared server terminals exist for controlling update objects arranged in the same virtual reality space;
FIG. 21 is a block diagram illustrating another example of the constitution of the client terminal of FIG. 1;
FIG. 22 describes destinations in which basic objects and update objects are stored;
FIG. 23 describes an arrangement of basic objects and update objects;
FIG. 24 describes software for implementing the cyberspace system of FIG. 1;
FIG. 25 describes software operating on the client terminal of FIG. 1 and the shared server terminal of FIG. 1;
FIG. 26 describes an environment in which the software of FIG. 25 operates;
FIG. 27 is an example of display on a shared server terminal of FIG. 25;
FIG. 28 is another example of display on the shared server terminal of FIG. 25;
FIG. 29 is still another example of display on the shared server terminal of FIG. 25;
FIG. 30 is yet another example of display on the shared server terminal of FIG. 25;
FIG. 31 is an example of display on a client terminal of FIG. 25;
FIG. 32 is an example of display on the shared server terminal of FIG. 25;
FIG. 33 is another example of display on the client terminal of FIG. 25;
FIG. 34 is another example of display on the shared server terminal of FIG. 25;
FIG. 35 is a block diagram illustrating an example of the constitution of a related art cyberspace system;
FIG. 36 is an example of display on a client terminal of FIG. 35;
FIG. 37 is an example of display on another client terminal of FIG. 35; and

FIG. 38 is a schematic diagram illustrating communication means of a cyberspace system constructed via a related art LAN (Local Area Network).

DETAILED DESCRIPTION OF PREFERRED EMBODIMENTS

This invention will be described in further detail by way of example with reference to the accompanying drawings.

The basic idea and concept of a virtual society is described by Hiroaki Kitano, Sony Computer Science Laboratories , as follows in his home page "Kitano Virtual Society (V1.0) (http://www.csl,sony.co.jp/person/kitano/VS/concept.j.html.1995)":

"In the beginning of the 21st century, a virtual society would emerge in a network spanning all the world. People in every part of the world will make a society in which millions or hundred millions of people live in a shared space created in the network. A society that will emerge beyond the current Internet, CATV, and the so-called information super highway is a virtual society that I conceive. In the virtual society, people can not only perform generally the same social activities as those in the real world--enjoy shopping, have a chat, play games, do work, and the like--but also perform things that are possible only in the virtual society (for example, moving from Tokyo to Paris in an instant). Such a "society" would be implemented only by state-of-the-art technologies such as cyberspace constructing technologies that support a broadband network, high-quality three-dimensional presentation capability and bidirectional communications of voice, music and moving picture signals, and a large-scale distributed system that allows a lot of people to share the constructed space."

For further details, look at the above mention home page (URL = http://www.csl.sony.co.jp/person/kitano/VS/concept.j.html).

The three-dimensional virtual reality space that implements the above-mentioned virtual society is a cyberspace system. The actual examples of the infrastructures for constructing this cyberspace system includes, at this point of time, the Internet, which is a world-wide computer network connected by a communications protocol called TCP/IP (Transmission Control Protocol/Internet Protocol) and the intranet implemented by applying the Internet technologies such as WWW (World Wide Web) to the in-house LAN (Local Area Network). Further, use of a broadband communication network based on FTTH (Fiber To The Home) in the future is proposed in which the main line system and the subscriber system are all constituted by fiber optics.

Meanwhile, for an information providing system available on the Internet, WWW developed by CERN (European Center for Nuclear Research) in Switzerland is known. This technology allows a user to browse information including text, image and voice for example in the hyper text form. Based on HTTP (Hyper Text Transfer Protocol), the information stored in a WWW server terminal is sent asynchronously to terminals such as personal computers.

The WWW server is constituted by server software called an HTTP demon and an HTML file in which hyper text information is stored. The hyper text information is described in a description language called HTML (Hyper Text Makeup Language). In the description of a hyper text by HTML, a logical structure of a document is expressed in a format specification called a tag enclosed by "<" and ">". Description of linking to other information is made based in link information called an anchor. A method in which a location at which required information is stored by the anchor is URL (Uniform Resource Locator).

A protocol for transferring a file described in HTML on the TCP/IP network is HTTP. This protocol has a capability of transferring a request for information from a client to the WWW server and the requested hyper text information stored in the HTML file to the client.

Used by many as an environment for using WWW is client software such as Netscape Navigator (trademark) called a WWW browser.

It should be noted that demon denotes a program for executing control and processing in the background when performing a job in the UNIX environment.

Recently, a language for describing three-dimensional graphics data, called VRML (Virtual Reality Modeling Language) and a VRML viewer for drawing a virtual reality space described in this VRML on a personal computer or a workstation have been developed. VRML allows to extend WWW, set hyper text links to objects drawn by three-dimensional graphics, and follow these links to sequentially access WWW server terminals. The specifications of VRML version 1.0 were made public in May 26, 1995. Then, in November 9, 1995, a revised version in which errors and ambiguous expressions are corrected was made public. The specifications are available from URL = http://www.oki.com./vrml/vrm110c.html.

Storing three-dimensional information described in the above-mentioned VRML in a WWW server terminal allows the construction of a virtual space expressed in three-dimensional graphics on the Internet. Further, use of the VRML viewer by using personal computers and the like interconnected by the Internet can implement the display of a virtual space based on three-dimensional graphics and the walk-through capability.

In what follows, examples in which the Internet is used for a network will be described. It will be apparent to those skilled in the art that FTTH may be used instead of the Internet to implement the virtual space.

It should be noted that Cyberspace is a coinage by William Gibson, a US science fiction writer, and was used in his

"Neuromancer" (1984) that made him famous. Strictly speaking, however, the word Cyberspace first appeared in his "Burning Chrome" (1982). In these novels, there are scenes in which the hero attaches a special electrode on his forehead to connect himself to a computer to directly reflect on his brain a virtual three-dimensional space obtained by visually reconfiguring data on a computer network spanning all over the world. This virtual three-dimensional space was called Cyberspace. Recently, the term has come to be used as denoting a system in which a virtual three-dimensional space is used by a plurality of users via a network.

Now, referring to FIG. 1, there is shown an example of a constitution of a cyberspace (a three-dimensional virtual reality space provided via a network) system according to the present invention. As shown, in this preferred embodiment, host computers (or simply hosts) A through C, a plurality (three in this case) of client terminals 13-1 through 13-3, and any number (one in this case) of service provider terminal 14 are interconnected via a world-wide network 15 (a global communication network sometimes referred to as an information transmission medium herein) like the Internet 15 by way of example.

The host A constitutes a system of so-called WWW (World Wide Web) for example. Namely, the host A has information (or a file) to be described later. And, each piece of information (or each file) is related with a URL (Uniform Resource Locator) for uniformly specify that information. Specifying a URL allows access to the information corresponding to it.

To be more specific, the host A stores three-dimensional image data for providing three-dimensional virtual reality spaces (hereinafter appropriately referred to simply as virtual reality spaces) such as virtual streets in Tokyo, New York, and other locations for example. It should be noted that these three-dimensional image data do not change in their basic state; that is, these data include static data consisting of only basic objects such as a building and a road to be shared by a plurality of users. If the basic state changes, it only reflects an autonomous change in the state of a merry-go-round or a neon. The static data are considered to be data that are not subject to update. The host A has an information server terminal 10 (a basic server terminal). The information server terminal 10 is adapted, when it receives a URL via the network 15, to provide the information corresponding to the received URL, namely a corresponding virtual reality space (in this case, a space consisting of only basic objects).

It should be noted that, in FIG. 1, there is only one host, namely the host A, which has an information server terminal for providing the virtual reality space (consisting of only basic objects) of a specific area. It is apparent that such a host may be installed in plural.

The host B has a shared server terminal 11. The shared server terminal 11 controls update objects that constitute a virtual reality space when put in it. The update objects are avatars for example representing users of the client terminals. Thus, the shared server terminal 11 allows a plurality of users to share the same virtual reality space. It should be noted, however, that the host B controls only the update objects located in a virtual reality space for only a specific area (for example, Tokyo) of the virtual reality spaces controlled by the host A. That is, the host B is dedicated to the virtual reality space of a specific area. Also, it should be noted that the network 15 is connected with, in addition to the host B, a host, not shown, having a shared server terminal for controlling update objects located in virtual reality spaces of other areas such as New York and London, stored in the host A.

The host C, like the host A, constitutes a WWW system for example and stores data including IP (Internet Protocol) addresses for addressing hosts (shared server terminals) that control update objects like the host B. Therefore, the shared server terminal addresses stored in the host C are uniformly related with URLs as with the case of the host A as mentioned above. In addition, the host C has a mapping server terminal 12 (a control server terminal). Receiving a URL via the network 15, the mapping server terminal 12 provides the IP address of the shared server terminal corresponding to the received URL via the network 15. It should be noted that FIG. 1 shows only one host, namely the host C, which has the mapping server terminal 12 for providing shared server terminal addresses. It will be apparent that the host C can be installed in plural.

The client terminal 13 (13-1, 13-2 or 13-3) receives a virtual reality space from the information server terminal 10 via the network 15 to share the received virtual reality space with other client terminals (including the service provider terminal 14), under the control of the shared server terminal 11. Further, the client terminal 13 is also adapted to receive specific services (information) using the virtual reality space from the service provider terminal 14.

The service provider terminal 14, like the client terminal 13, receives a virtual reality space to share the same with the client terminal 13 (if there is another service provider terminal, it also shares this space). Therefore, as far as the capability of this portion is concerned, the service provider terminal 14 is the same as the client terminal 13.

Further, the service provider terminal 14 is adapted to provide specific services to the client terminal 13. It should be noted that FIG. 1 shows only one service provider terminal 14. It will be apparent that the service provider terminal may be installed in plural.

The following briefly describes a WWW system constituted by the host A and the host C. Referring to FIG. 2, WWW is one of the systems for providing information from hosts X, Y, and Z to unspecified users (client terminals) via the network 15 (the Internet in the case of WWW). The information that can be provided in this system include not only texts but also graphics, images (including still images and moving pictures), voices, three-dimensional images, and hyper texts which combines all these information.

In WWW, a URL, or a form for uniformly represent these pieces of information is determined. Specifying a specific URL, each user can obtain the information corresponding to the specified URL. As shown in FIG. 3, each URL is composed of a protocol type for representing a service type (http in the preferred embodiment of FIG. 3, which is equivalent to a command for retrieving a file corresponding to a file name to be described later and send the retrieved file), a host name indicating a destination of the URL (in the embodiment of FIG. 3, www.csl.sony.co. jp), and a file name of data to be sent (in the embodiment of FIG. 3, index.html) for example.

Each user operates the client terminal to enter a URL for desired information. When the URL is entered, the client terminal references a host name, for example, contained in the URL. A link with a host (in the embodiment of FIG. 2, the host X for example connected to the Internet) addressed by the host name is established. Then, at the client terminal, the URL is sent to the linked host, namely the host X, via the Internet, requesting the host X for sending the information specified in the URL. In the host X, an HTTP demon (httpd) is operating on the information server terminal (the WWW server terminal). Receiving the URL, the information server terminal sends back the information specified in the URL to the client terminal via the Internet.

The client terminal receives the information from the information server terminal to display the received information on its monitor as required. Thus, the user can get the desired information.

Therefore, only storing in the host such data for describing elements (objects) for constituting a virtual reality space as shapes of basic objects (for example, a rectangular prism and a cone) and locations and attributes (color and texture for example) of these basic objects allows to provide the virtual reality space (consisting of only basic objects in this case) to unspecified users Namely, as long as the Internet is used for the network 15 and WWW is used, virtual reality spaces can be provided to unspecified users world-wide with ease and at a low cost because the Internet itself already spans almost all over the world and the description of the elements constituting each virtual reality space to be stored in hosts does not require to make changes to information servers (WWW server terminals) constituting WWW. It should be noted that the service for providing the description of the elements constituting a virtual reality space is upward compatible with existing services provided by WWW.

Storing in a specific host (a mapping server terminal) the IP addresses of other hosts as information also allows to provide the host IP addresses to unspecified users world-wide with ease.

It should be noted that it is difficult for a plurality of users to share the same virtual reality space if only the description (the data of three-dimensional image for providing the virtual reality space of a specific area) of elements constituting the virtual reality space is stored in a host constituting WWW. Namely, in WWW, the information corresponding to a URL is only provided to a user and therefore no control for information transfer is performed. Hence, it is difficult to transfer between users the above-mentioned change information of update objects by using WWW without changing its design. Therefore, in the cyberspace system of FIG. 1, the host B having the shared server terminal 11 and the host C having the mapping server 12 are installed to allow a plurality of users to share the same virtual reality space, details of which will be described later.

Next, FIG. 4 shows an example of the constitution of the information server terminal 10 that operates on the host A of FIG. 1. As shown in FIG. 4, the information server terminal 10 has a CPU 81 which performs a variety of processing operations according to a program stored in a ROM 82. In the information server 10, the above-mentioned HTTP demon is operating in the background. A RAM 83 stores data and program necessary for the CPU 81 to perform the variety of processing operations. A communication device 84 is adapted to transfer specific data with the network 15. A storage device 85 composed of a hard disc, an optical disc, and magneto-optical disc stores the data of the three-dimensional images for providing a virtual reality space of a specific area such as Tokyo or New York for example along with URLs as mentioned above.

FIG. 5 shows an example of the constitution of the shared server terminal 11 operating on the host B of FIG. 1. As shown, the shared server terminal has a CPU 21 which executes a variety of processing operations according to a program stored in a ROM 22. A RAM 23 appropriately stores data and a program necessary for the CPU 21 to execute the variety of processing operations. A communication device 24 transfers specific data with the network 15.

A display device 25 has a CRT (Cathode Ray Tube) or an LCD (Liquid Crystal Display) for example and is connected to interface 28 to monitor images of the virtual reality space (composed of not only basic objects but also update objects) of an area controlled by the shared server terminal 11. The interface 28 is also connected with a microphone 26 and a loudspeaker 27 to supply a specific voice signal to the client terminal 13 and the service provider terminal 14 and monitor a voice signal coming from these terminals.

The shared server terminal 11 has an input device 29 on which a variety of input operations are performed via the interface 28. This input device has at least a keyboard 29a and a mouse 29b.

A storage device 30 composed of a hard disc, an optical disc, and a magneto-optical disc stores data of the virtual reality space of an area controlled by the shared server terminal 11. It should be noted that the data of the virtual reality space are the same as those stored in the storage device 85 of the information server terminal 10 (of FIG. 4). When these data are displayed on the display device 25, the virtual reality space of the area controlled by the shared server terminal 11 is displayed.

FIG. 6 shows an example of the constitution of the mapping server terminal 12 operating on the host C of FIG. 1.

Components CPU 91 through communication device 94 are generally the same in constitution as those of FIG. 4, so that the description of the components of FIG. 6 is omitted in general. A storage device 95 stores addresses, along with URLs, for identifying shared server terminals that control update objects (in the embodiment of FIG. 1, only the shared server terminal 11 is shown; actually, other shared server terminals, not shown, are connected to the network 15).

FIG. 7 shows an example of the constitution of the client terminal 13 (actually, client terminals 13-1 through 13-3). The client terminal 13 has a CPU 41 which executes a variety of processing operations according to a program stored in a ROM 42. A RAM 43 appropriately stores data and a program necessary for the CPU 41 to executes the variety of processing operations. A communication device 44 transfers data via the network 15.

A display device 45 has a CRT or an LCD to display three-dimensional images created by computer graphics or taken by an ordinary video camera. A microphone 46 is used to output a voice signal to the shared server terminal 11. A loudspeaker 47 outputs the voice signal coming from the shared server terminal 11. An input device 49 is operated to perform a variety of input operations.

A keyboard 49a of the input device 49 is operated when entering text (including an URL) composed of specific characters and symbols. A mouse 49b is operated when entering specific positional information. A viewpoint input device 49c and a movement input device 49d are operated when changing the state of the avatar as an update object of the client terminal 13. That is, the viewpoint input device 49c is used to enter the viewpoint of the avatar of the client terminal 13, thereby moving the viewpoint of the avatar vertically, horizontally or in the depth direction. The movement input device is used to move the avatar in the forward and backward direction or the right and left direction at a specific velocity. It is apparent that the operations done through the viewpoint and movement input devices may also be done through the above-mentioned keyboard 49a and the mouse 49b.

A storage device 50 composed of a hard disc, an optical disc, and magneto-optical disc stores avatars (update objects) representing users. Further, the storage device 50 stores a URL (hereinafter appropriately referred to as an address acquisition URL) for acquiring an IP address of a shared server terminal for managing update objects to be located in the virtual reality space of each area stored in the information server terminal 10 (if there is an information server terminal other than the information server terminal 10, that information server terminal is included). The address acquisition URL is stored as associated with a URL (hereinafter appropriately referred to as a virtual reality space URL) corresponding to the data of the virtual reality space of that area. This setup allows to obtain the address acquisition URL for acquiring the IP address of the shared server terminal for controlling the virtual reality space of that area when the virtual reality space URL for the data of the virtual reality space for that area has been entered.

Interface 48 constitutes the data interface with a display device 45, a microphone 46, a loudspeaker 47, an input device 49, and the storage device 50.

FIG. 8 shows an example of the constitution of the service provider terminal 14 of FIG. 1. The components including a CPU 51 through a storage device 60 are generally the same as the components including the CPU 41 through the storage device 50 and therefore the description of the CPU 51 through the storage device 60 is omitted.

FIG. 9 shows schematically a virtual reality space that is provided by the information server terminal 10 of FIG. 1 and can be shared by a plurality of users under the control of the shared server terminal 11. As shown in FIG. 9, this virtual reality space constitutes a town, in which avatar C (avatar of the client terminal 13-1 for example) and avatar D (avatar of the client terminal 13-2 for example) can move around.

Avatar C sees an image as shown in FIG. 10 for example from the position and viewpoint in the virtual reality space. Namely, data associated with the basic objects constituting the virtual reality space are provided to the client terminal 13-1 from the information server terminal 10 to be stored in a RAM 43 (or a storage device 50). Then, from the RAM 43 (or the storage device 50), data are read out of a virtual reality space that can be seen when the same is seen from specific viewpoint and position and the read data are supplied to the display device 45. Then, when the viewpoint and position of avatar C are changed by operating a viewpoint input device 49c and a movement input device 49d, data corresponding the change are read from the RAM 43 (or the storage device 50) to be supplied to the display device 45, thereby changing the virtual reality space (the three-dimensional image) being displayed on the display device 45.

Further, data associated with another user's avatar (an update object) (avatar D of FIG. 10) that can be seen when the virtual reality space is seen from the current viewpoint and position are supplied to the client terminal 13-1 from the shared server terminal 11. Based on the supplied data, the display on the display device 45 is changed. Namely, in the state of FIG. 9, since avatar C is looking in the direction of avatar D, avatar D is displayed in the image (the virtual reality space) displayed on the display device 45 of the client terminal 13-1 as shown in FIG. 10.

Likewise, an image as shown in FIG. 11 is displayed on the display device 45 of the client terminal 13-2 to which avatar D corresponds. This displayed image is also changed by moving the viewpoint and position of avatar D. It should be noted that, in FIG. 9, avatar D is looking in the direction of avatar C, so that avatar C is displayed in the image (the virtual reality space) on the display device 45 of the client terminal 13-2 as shown in FIG. 11.

The service provider terminal 14 controls a part of the sharable virtual reality space provided by the information server terminal 10 and the shared server terminal 11. In other words, the service provider purchases a part of the virtual reality space from administrators (information providers who provide information of the virtual reality space) of the information server terminal 10 and the shared terminal 11. This purchase is performed in the real space. Namely, upon

request by a specific service provider for the purchase of the virtual reality space, the administrators of the information server terminal 10 and the shared server terminal 11 allocate a part of the requested virtual reality space to that specific service provider.

For example, assume that the owner (service provider) of the service provider terminal 14 lease a room in a specific building in the virtual reality space and use the room as a shop for electric appliances. The service provider provides information about commodities, for example televisions, to be sold in the shop. Based on the information, the server terminal administrator creates three-dimensional images of the televisions by computer graphics and place the created images at specific positions in the shop. Thus, the images to be placed in the virtual reality space have been completed.

Similar operations are performed by other service providers to form the virtual reality space as a big town for example.

FIG. 12 is a top view of a virtual reality space (a room in a building in this example) to be occupied by the service provider owning the service provider terminal 14. In this embodiment, one room of the building is allocated to this service provider in which two televisions 72 and 73 are arranged with a service counter 71 placed at a position shown. The service provider of the service provider terminal 14 places his own avatar F behind the service counter 71. It will be apparent that the service provider can move avatar F to any desired position by operating a movement input device 59d of the service provider terminal 14.

Now, assume that avatar C of the client terminal 13-1 has come in this electric appliances shop as shown in FIG. 12. At this moment, an image as shown in FIG. 13 for example is displayed on the display device 45 of the client terminal 13-1, in correspondence to the position and viewpoint of avatar C. If avatar F is located behind the service counter 71, an image as shown in FIG. 14 is displayed on a display device 55 of the service provider terminal 14. As shown in FIGS. 13 and 14, the image viewed from avatar C shows avatar F, while the image viewed from avatar F shows avatar C.

As shown in FIG. 13, the image viewed from avatar C shows a cursor 74 to be used when a specific image is specified from the client terminal 13-1. Likewise, as shown in FIG. 14, a cursor 75 is shown for the service provider terminal 14 to specify a specific image.

Moving avatar C around the television 72 or 73 by operating the movement input device 49d of the client terminal 13-1 displays on the display device 45 the image corresponding to avatar C's moved position and viewpoint. This allows the user to take a close look at the televisions as if they were exhibited in a shop of the real world.

Also, when the user moves the cursor 74 by operating a mouse 49b and then click on avatar F, a conversation request signal is transmitted to the service provider terminal 14 corresponding to avatar F. Receiving the conversation request signal, the service provider terminal 14 can output, via a microphone 56, a voice signal to a loudspeaker 47 of the client terminal 13-1 corresponding to avatar C. Likewise, entering a specific voice signal from a microphone 46 of the client terminal 13-1 can transmit user's voice signal to a speaker 57 of the service provider terminal 14. Thus, the user and service provider can make conversation in a usual manner.

It is apparent that the conversation can be requested from avatar F (the service provider terminal 14) to avatar C (the client terminal 13-1).

When the cursor 74 is moved on the client terminal 13-1 and the image of the television 72 for example is clicked, the information (the provided information) describing the television 72 is provided in more detail. This can be implemented by linking the data of the virtual reality space provided by the information server terminal 10 with the description information about the television. It is apparent that the image for displaying the description information may be either three-dimensional or two-dimensional.

The specification of desired images can be performed also from the service provider terminal 14. This capability allows the service provider to offer the description information to the user in a more active manner.

If the service provider specifies avatar C with the cursor 75 by operating the mouse 59b, the image corresponding to the position and viewpoint of avatar C, namely, the same image as displayed on the display device 45 of the client terminal 13-1 can be displayed on the display device 55 of the service provider terminal 14. This allows the service provider to know where the user (namely avatar C) is looking at and therefore promptly offer information needed by the user.

The user gets explanations about the products, or gets the provided information or description information. If the user wants to buy the television 72 for example, he can buy the same actually. In this case, the user requests the service provider terminal 14 for the purchase via avatar F. At the same time, the user transmits his credit card number for example to the service provider terminal 14 (avatar F) via avatar C. Then, the user asks the service provider terminal for drawing an amount equivalent to the price of the television purchased. The service provider of the service provider terminal 14 performs processing for the drawing based on the credit card number and make preparations for the delivery of the purchased product.

The images provided in the above-mentioned virtual reality space are basically precision images created by computer graphics. Therefore, looking at these images from every angle allows the user to make observation of products almost equivalent to the observation in the real world, thereby providing surer confirmation of products.

Thus, the virtual reality space contains a lot of shops, movie houses and theaters for example. Because products can be actually purchased in the shops, spaces installed at favorable locations create actual economic values. There-

fore, such favorable spaces themselves can be actually (namely, in the real world) purchased or leased. This provides complete distinction from the so-called television shopping system ordinarily practiced.

The following describes the operations of the client terminal 13 (or the service provider terminal 14), the information server terminal 10, the mapping server terminal 12, and the shared server terminal 11 with reference to the flowcharts of FIGS. 15 through 18.

Now, referring to FIG. 15, there is shown an example of processing by the client terminal 13 (or the service provider terminal 14). In step S1, the CPU 41 checks whether a virtual reality space URL has been entered or not. If no virtual reality space URL has been found, the processing remains in step S1. If a virtual reality space URL has been found in step S1, namely, if a virtual reality space URL corresponding to a desired virtual reality space entered by the user by operating the keyboard 49a has been received by the CPU 41 via interface 48, the process goes to step S2. In step S2, a WWW system is constituted as described with reference to FIG. 2 and the virtual reality space URL is transmitted from the communication device 44 via the network 15 to the information server terminal of a specific host (in this case, the information server terminal 10 of the host A for example) that has the information server terminal, thereby establishing a link.

Further, in step S2, an address acquisition URL related to the virtual reality space URL is read from the storage device 50 to be transmitted from the communication device 44 via the network 15 to the mapping server terminal of a specific host (in this case, mapping server terminal 12 of the host C for example) that constitutes the WWW system, thereby establishing a link.

Then, the process goes to step S3. In step S3, data (three-dimensional image data) of the virtual reality space or the IP address of the shared server terminal 12 corresponding to the virtual reality space URL received in step S2 or the address acquisition URL is received by the communication device 44.

Namely, in step S2, the virtual reality space URL is transmitted to the information server terminal 10. When this virtual reality space URL is received by the information server terminal 10, the data of the corresponding virtual reality space are transmitted to the client terminal 13 via the network 15 in step S22 of FIG. 16 to be described. Thus, in step S3, the data of the virtual reality space transmitted from the information server terminal 10 are received. It should be noted that the received virtual reality space data are transferred to the RAM 43 to be stored there (or first stored in the storage device 50 to be transferred to the RAM 43.

Also, in step S2, the address acquisition URL is transmitted to the mapping server terminal 12. When the address acquisition URL is received by the mapping server terminal 12, the IP address of the shared server terminal corresponding to the URL is transmitted to the client terminal 13 via the network 15 in step S32 of FIG. 17 to be described. Thus, in step S3, the IP address of the shared server terminal 12 transmitted from the mapping server 12 is received.

As described above, the address acquisition URL related to the entered virtual reality space URL corresponds to the IP address of the shared server terminal that controls the update object placed in the virtual reality space corresponding to that virtual reality space URL. Therefore, for example, if the entered virtual reality space URL corresponds to a virtual reality space of Tokyo and the shared server terminal 11 owned by the host B controls the update objects placed in the Tokyo virtual reality space, the IP address of the shared server terminal 11 is received in step S3. Consequently, the user can automatically get the location (the IP address) of the shared server terminal that controls the virtual reality space of a desired area even if the user does not know which shared server terminal controls the update objects in a virtual reality space in which area.

It should be noted that, in steps S2 and S3, the processing of transmitting the virtual reality space URL and the address acquisition URL and receiving the virtual reality space data and the IP address is actually performed by transmitting the virtual reality space URL, receiving the data of the corresponding virtual reality space, transmitting the address acquisition URL, and then receiving the corresponding IP address in this order by way of example.

When the virtual reality space data and the shared server terminal IP address are received in step S3, the process goes to step S4. In step S4, a connection request is transmitted from the communication device 44 via the network 15 to the shared server terminal (in this case, the shared server terminal 11 for example) corresponding to the IP address (the shared server terminal IP address) received in step S3. This establishes a link between the client terminal 13 and the shared server terminal 11. Further, in step S3, after the establishment of the link, the avatar (namely, the update object) representing oneself stored in the storage device 50 is transmitted from the communication device 44 to the shared server terminal 11.

When the shared server terminal 11 receives the user's avatar, the same is then transmitted to the client terminals of other users existing in the same virtual reality space (in this case, that of Tokyo as mentioned above). Then, on the client terminals of other users, the transmitted avatar is placed in the virtual reality space, thus implementing the sharing of the same virtual reality space among a plurality of users.

It should be noted that, rather than providing the user's avatar from the client terminal 11 to the shared server terminal 11, a predetermined avatar may also be allocated from the shared server terminal 11 to each user who accessed the same. Also, in the client terminal 13, the avatar of the user himself who uses this terminal can be placed and displayed in the virtual reality space as shown in FIGS. 36 and 37; in the real world, however, the user cannot see himself, so that it is desirable for the user's avatar not be displayed on that user's client terminal in order to make the virtual real-

ity space as real as possible.

When the processing of step S4 has been completed, the process goes to step S5. In step S5, the data of the virtual reality space that can be seen when the same is seen from specific viewpoint and position are read from the RAM 43 by the CPU 41 to be supplied to the display device 45. Thus, the specific virtual reality space is shown on the display device 45.

Then, in step S6, the communication device 44 determines whether update information of another user's avatar has been sent from the shared server terminal 11.

As described above, the user can update the position or viewpoint of his own avatar by operating the viewpoint input device 49c or the movement input device 49d. If the update of the position or viewpoint of the avatar is instructed by using this capability, the CPU 41 receives the instruction via the interface 48. According to the instruction, the CPU 41 performs processing for outputting positional data or viewpoint data corresponding to the updated position or viewpoint as update information to the shared server terminal 11. In other words, the CPU 41 controls the communication device 44 to transmit the update information to the shared server terminal 11.

Receiving the update information from the client terminal, the shared server terminal 11 outputs the update information to other client terminals in step S44 of FIG. 18 to be described. It should be noted the shared server terminal 11 is adapted to transmit the avatar received from the client terminal that requested for access to client terminals of other users, this avatar being transmitted also as update information.

When the update information has come as mentioned above, it is determined in step S6 that update information of the avatar of another user has come from the shared server terminal 11. In this case, this update information is received by the communication device 44 to be outputted to the CPU 41. The CPU 41 updates the display on the display device 45 according to the update information in step S7. That is, if the CPU 41 receives the positional data or viewpoint data from another client terminal as update information, the CPU 41 moves or changes (for example, the orientation of the avatar) the avatar of that user according to the received positional data or viewpoint data. In addition, if the CPU 41 receives the avatar from another client terminal, the CPU 41 places the received avatar in the currently displayed virtual reality space at a specific position. It should be noted that, when the shared server terminal 11 transmits an avatar as update information, the shared server terminal also transmits the positional data and viewpoint data of the avatar along with the update information. The avatar is displayed on the display device 45 according to these positional data and viewpoint data.

When the above-mentioned processing has come to an end, the process goes to step S8.

Meanwhile, if, in step S6, no update information of the avatar of another user has come from the shared server terminal 11, the process goes to step S8, skipping step S7. In step S8, the CPU 41 determines whether the position or viewpoint of the avatar of the user of the client terminal 13 has been updated or not by operating the viewpoint input device 49c or the movement input device 49d.

In step S8, if the CPU 41 determines that the avatar position or viewpoint has been updated, namely, if the viewpoint input device 49c or the movement input device 49d has been operated by the user, the process goes to step S9. In step S9, the CPU 41 reads data of the virtual reality space corresponding to the position and viewpoint of the avatar of the user based on the entered positional data and viewpoint data, makes calculations for correction as required, and generates the image data corresponding to the correct position and viewpoint. Then, the CPU 41 outputs the generated image data to the display device 45. Thus, the image (virtual reality space) corresponding to the viewpoint and position entered from the viewpoint input device 49c and the movement input device 49d is displayed on the display device 45.

Further, in step S10, the CPU 41 controls the communication device 44 to transmit the viewpoint data or the positional data entered from the viewpoint input device 49c or the movement input device 49d to the shared server terminal 11, upon which process goes to step S11.

Here, as described above, the update information coming from the client terminal 13 is received by the shared server terminal 11 to be outputted to other client terminals. Thus, the avatar of the user of the client terminal 13 is displayed on the other client terminals.

On the other hand, in step S8, if CPU 41 determines that the avatar's position or viewpoint has not been updated, the process goes to step S11 by skipping steps S9 and S10. In step S11, the CPU 41 determines whether the end of the update data input operation has been instructed by operating a predetermined key on the keyboard; if the end has not been instructed, the process goes back to step S6 to repeat the processing.

Referring to the flowchart of FIG. 16, there is shown an example of the processing by the information server terminal 10. First, the communication device 84 determines in step S 21, whether a virtual reality space URL has come from the client terminal 13 via the network 15. If, in step S 21, the communication device 84 determines that no virtual reality space URL has come, the process goes back to step S21. If the virtual reality space URL has come, the same is received by the communication device 84, upon which the process goes to step S22. In step S22, the data of the virtual reality space related to the virtual reality space URL received by the communication device 84 are read by the CPU 81 to be transmitted via the network 15 to the client terminal 13 that transmitted the virtual reality space URL. Then, the process goes back to step S21 to repeat the above-mentioned processing.

FIG. 17 shows an example of the processing by the mapping server terminal 12. In the mapping server terminal 12,

the communication device 94 determines in step S 31, whether an address acquisition URL has come from the client terminal 13 via the network 15. If no address acquisition URL has come, the process goes back to step S31. If the address acquisition URL has come, the same is received by the communication device 94, upon which the process goes to step 32. In step S32, the IP address (the IP address of the shared server terminal) related to the address acquisition URL received by the communication device 94 is read from the storage device 95 by the CPU 91 to be transmitted via the network 15 to the client terminal 13 that transmitted the address acquisition URL. Then, the process goes back to step S31 to repeat the above-mentioned processing.

FIG. 18 shows an example of the processing by the shared server terminal 11. In the shared server terminal 11, the communication device 24 determines, in step S41, whether a connection request has come from the client terminal 13 via the network 15. If no connection request has come, the process goes to step S43 by skipping step S42. If the connection request has come, that is, if the client terminal 13 has the connection request to the shared server terminal 11 in step S4 of FIG. 15, the communication link with the client terminal 13 is established by the communication device 24, upon which the process goes to step S42.

In step S42, a connection control table stored in the RAM 23 is updated by the CPU 21. Namely, it is necessary for the shared server terminal 11 to recognize the client terminal 13 with which the shared server terminal 11 is linked, in order to transmit update information coming from the client terminal 13 to other client terminals. To do so, when the communication link with client terminals has been established, the shared server terminal 11 registers the information for identifying the linked client terminals in the connection control table. That is, the connection control table provides a list of the client terminals currently linked to the shared server terminal 11. The information for identifying the client terminals include the source IP address transmitted from each client terminal as the header of TCP/IP packet and a nickname of the avatar set by the user of each client terminal.

Then, the process goes to step S43, in which the communication device 24 determines whether the update information has come from the client terminal 13. If, in step S43, no update information has been found, the process goes to step S45 by skipping step S44. If the update information has been found, namely, if the client terminal 13 has transmitted, in step S10 of FIG. 15, positional data and viewpoint data as the update information to the shared server terminal 11 (or, in step S4 of FIG. 15, the client terminal 13 has transmitted the avatar as the update information to the shared server terminal 11 after transmission of the connection request), the update information is received by the communication device 24, upon which the process goes to step S44. In step S44, the CPU 21 references the connection control table stored in the RAM 23 to transmit the update information received by the communication device 24 to other client terminals than the client terminal which transmitted that update information. At this moment, the source IP address of each client terminal controlled by the connection control table is used.

It should be noted that the above-mentioned update information is received by the client terminal 13 in step S6 of FIG. 15 as described above.

Then, the process goes to step S45, in which the CPU 21 determines whether the end of processing has been instructed by the client terminal 13. If the end of processing has not been instructed, the process goes back to S41 by skipping step S46. If the end of processing has been instructed, the process goes to step S46. In step S46, the link with the client terminal 13 from which the instruction has come is disconnected by the communication device 24. Further, from the connection control table, the information associated with the client terminal 13 is deleted by the CPU 21, upon which the process goes back to step S41.

Thus, the control of the update objects is performed by the shared server terminal 11 and the control (or provision) of the basic objects is performed by the information server terminal 10 constituting the WWW of the Internet used world-wide, thereby easily providing virtual reality spaces that can be shared by unspecified users world-wide It should be noted that the specifications of the existing WWW system need not be modified to achieve the above-mentioned objective.

Provision of the virtual reality space data by use of the WWW system need not create any new web browser because the transfer of these data can be made using related art web browsers such as the Netscape Navigator (trademark) offered by Netscape Communications, Inc. for example.

Moreover, because the IP address of the shared server terminal 11 is provided by the mapping server terminal 12, the user can share a virtual reality space with other users without knowing the address of the shared server terminal.

In what follows, a procedure of communications between the client terminal 13, the information server terminal 10, the shared server terminal 11, and the mapping server terminal 12 will be described with reference to FIG. 19. When the user desires to get a virtual reality space, the user enters the URL (the virtual reality space URL) corresponding to the virtual reality space of the desired area. Then, the entered URL is transmitted from the client terminal 13 to the information server terminal 10 (http). Receiving the URL from the client terminal 13, the information server terminal 10 transmits the data (three-dimensional scene data representing only basic objects) of the virtual reality space associated with the URL to the client terminal 13. The client terminal 13 receives and display these data.

It should be noted that, at this stage of processing, no link is established between the client terminal 13 and the shared server terminal 11, so that the client terminal 13 does not receive update information; therefore, a virtual reality space composed of only basic objects, namely a virtual reality space shown only a still street for example, is shown (that

is, no update objects such as avatars of other users are displayed).

Further, the address acquisition URL related to the virtual reality space URL is transmitted from the client terminal 13 to the mapping server terminal 12. The mapping server terminal 12 receives the address acquisition URL to transmit the IP address (the IP address of a shared server terminal controlling update objects located in the virtual reality space of the area related to the virtual reality space URL ,for example, the shared server terminal 11) related to the received address acquisition URL to the client terminal 13.

Here, it is possible that the IP address related to the address acquisition URL transmitted by the client terminal 13 is not registered in the mapping server terminal 12. Namely, a shared server terminal for controlling the update objects located in the virtual reality space of the area related to the virtual reality space URL may not be installed or operating for example. In such a case, the IP address of the shared server terminal cannot be obtained, so that a virtual reality space composed of only basic objects, a virtual reality space showing only a still street for example, is displayed. Therefore, in this case, sharing of a virtual reality space with other users is not established. Such a virtual reality space can be provided only by storing the virtual reality space data (namely, basic objects) in an information server terminal (a WWW server terminal) by the existing WWW system. This denotes that the cyberspace system according to the present invention is upward compatible with the existing WWW system.

Receiving the IP address (the IP address of the shared server terminal 11) from the mapping server terminal 12, the client terminal 13 transmits a connection request to a shared server terminal corresponding to the IP address, namely the shared server terminal 11 in this case. Then, when a communication link is established between the client terminal 13 and the shared server terminal 11, the client terminal 13 transmits the avatar (the three-dimensional representation of the user) representing itself to the shared server terminal 11. Receiving the avatar from the client terminal 13, the shared server terminal 11 transmits the received avatar to the other client terminals linked to the shared server terminal 11. At the same time, the shared server terminal 11 transmits the update objects (shapes of shared three-dimensional objects), the other users' avatars, located in the virtual reality space of the area controlled by the shared server terminal 11, to the client terminal 13.

In the other client terminals, the avatar of the user of the client terminal 13 is placed in the virtual reality space to appear on the monitor screens of the other client terminals. In the client terminal 13, the avatars of the other client terminals are placed in the virtual reality space to appear on its monitor screen. As a result, all the users of the client terminals linked to the shared server terminal 11 share the same virtual reality space.

Then, when the shared server terminal 11 receives the update information from other client terminals, transmits the received update information to the client terminal 13. Receiving the update information, the client terminal 13 changes the display (for example, the position of the avatar of another user is changed). When the state of the avatar of the user of the client terminal 13 is changed by that user, the update information reflecting that change is transmitted from the client terminal 13 to the shared server terminal 11. Receiving this update information, the shared server terminal 11 transmits the same to the client terminals other than the client terminal 13. Thus, on these other client terminals, the state of the avatar of the user of the client terminal 13 is changed accordingly (namely, the state of the avatar is changed as the same has been changed by the user of the client terminal 13 on the same).

Subsequently, the processing in which the client terminal 13 transmits the update information about the avatar of its own and receives the update information from the shared server terminal 11 to change the display based on the received update information continues until the connection with the shared server terminal 11 is disconnected.

Thus, the sharing of the same virtual reality space is established by transferring the update information via the shared server terminal 11 among the users. Therefore, if the shared server terminal 11 and the client terminal 13 are located remotely, there occurs a delay in the communication between these terminals, deteriorating the response in the communication. To be more specific, if the shared server terminal 11 is located in US for example and users in Japan are accessing the same, update information of user A in Japan is transmitted to user B in Japan via US, thereby taking time until a change made by user A is reflected in user B.

To overcome such a problem, rather than installing only one shared server terminal in the world, a plurality of shared server terminals are installed all over the world. And the IP addresses of the plurality of shared server terminals are registered in the mapping server terminal 12 to make the same provide the IP address of the shared server terminal in the geographical proximity to the client terminal 13.

To be more specific, as shown in FIG. 20, a shared server terminals W1 and W2 for controlling the update objects placed in a virtual reality space (a three-dimensional space) such as an amusement park are installed in Japan and US respectively by way of example. When the users in Japan and US have received the data of the amusement park's virtual reality space, each user transmits an address acquisition URL related to a virtual reality space URL corresponding to the amusement park's virtual reality space to the mapping server terminal 12 (the same address acquisition URL is transmitted from all users). At this moment, the users in Japan transmit the IP address of the shared server terminal W1 installed in Japan to the mapping server terminal 12, while the users in US transmit the IP address of the shared server terminal W2 installed in US to the mapping server terminal 12.

Here, the mapping server terminal 12 identifies the installation locations of the client terminals that transmitted the address acquisition URLs to the mapping server terminal in the following procedure.

In the communication in TCP/IP protocol, a source IP address and a destination IP address are described in the header of a TCP/IP packet.

Meanwhile, an IP address is made up of 32 bits and normally expressed in a decimal notation delimited by dot in units of eight bits. For example, an IP is expressed in 43.0.35.117. This IP address provides an address which uniquely identifies a source or destination terminal connected to the Internet. Because an IP address expressed in four octets (32 bits) is difficult to remember, a domain name is used. The domain name system (DNS) is provided to control the relationship between the domain names assigned to the terminals all over the world and their IP addresses. The DNS answers a domain name for a corresponding IP address and vice versa. The DNS functions based on the cooperation of the domain name servers installed all over the world. A domain name is expressed in "hanaya@ipd. sony.co.jp" for example, which denotes a user name, a host name, an organization name, an organization attribute, and country name (in the case of US, the country name is omitted) in this order. If the country name of the first layer is "jp", that terminal is located in Japan. If there is no country name, that terminal is located in US.

Using a domain name server 130 as shown FIG. 23, the mapping server terminal 12 identifies the installation location of the client terminal that transmitted the address acquisition URL to the mapping server terminal.

To be more specific, the mapping server terminal asks the domain name server 130 controlling the table listing the relationship between the source IP addresses of the requesting client terminal and the domain names assigned with the IP addresses for the corresponding domain name. Then, the mapping server terminal identifies the country in which a specific client terminal is installed based on the first layer of the domain name of the client terminal obtained from the domain name server 130.

In this case, since the client terminal used by each user and its shared server terminal are located in geographical proximity to each other, the above-mentioned problem of a delay, or the deterioration of response time is solved.

In this case, the virtual reality space provided to the users in Japan and US is the same amusement park's virtual reality space as mentioned above. However, since the shared server terminals that control the sharing are located in both countries, the sharing by the users in Japan is made independently of the sharing by the users in US. Namely, the same virtual reality space is shared among the users in Japan and shared among the users in US. Therefore, in this case, the same virtual reality space is provided from the information server terminal 10, but separate shared spaces are constructed among the users in both countries, thereby enabling the users to make a chat in their respective languages.

However, it is possible for the users of both countries to share the same virtual reality space by making connection between the shared server terminals W1 and W2 to transfer update information between them.

The deterioration of response also occurs when the excess number of users access the shared server terminal 11. This problem can be overcome by installing a plurality of shared server terminals for controlling the update objects placed in the virtual reality space in the same area in units of specific areas, for example, countries or prefectures and making the mapping server terminal 12 provide the addresses of those shared server terminals which are accessed less frequently.

To be more specific, a plurality of shared server terminals W3, W4, W5, and so on are installed and the mapping server terminal 12 is made provide the IP address of the specific shared server terminal W3 for example for specific URLs. Further, in this case, communication is performed between the mapping server terminal 12 and the shared server terminal W3 for example to make the shared server terminal W3 transmit the number of client terminals accessing the shared server terminal W3 to the mapping server terminal 12. Then, when the number of client terminals accessing the shared server terminal W3 has exceeded a predetermined level (100 terminals for example, which do not deteriorate the response of the shared server terminal W3) and if the mapping server terminal 12 has received another URL, the mapping server terminal 12 provides the IP address of another shared server terminal W4 for example (it is desired that the W4 be located in the proximity to the shared server terminal W3).

It should be noted that, in this case, the shared server terminal W4 may be put in the active state in advance; however, it is also possible to start the shared server W4 when the number of client terminals accessing the shared server W3 has exceeded a predetermined value.

Then, communication is performed between the mapping server terminal 12 and the shared server terminal W4. When the number of client terminals accessing the shared server terminal W4 has exceeded a predetermined value, and the mapping server terminal 12 has received another URL, the mapping server terminal 12 provides the IP address of the shared server terminal W5 (however, if the number of client terminals accessing the shared server terminal W3 has dropped below the predetermined level, the mapping server terminal 12 provides the IP address of the W3).

This setup protects each of the shared server terminals W3, W4, W5 and so on from application of excess load, thereby preventing the deterioration of response.

It should be noted that the above-mentioned capability can be implemented by controlling by the mapping server terminal 12 the IP addresses of shared server terminals to be outputted for specific URLs, so that the client terminal 13 and the software operating on the same need not be modified.

The present embodiment has been described by taking the user's avatar for example as the update object to be controlled by the shared server terminal 11; it is also possible to make the shared server terminal control any other update objects than avatars. It should be noted, however, that the client terminal 13 can also control update objects in

some cases. For example, an update object such as a clock may be controlled by the client terminal 13 based on the built-in clock of the same, updating the clock.

Further, in the present embodiment, the hosts A through C, the client terminals 13-1 through 13-3, and the service provider terminal 14 are interconnected via the network 15, which is the Internet; however, in terms of using the existing WWW system, the host A having the information server terminal 10 or the host C having the mapping server terminal 12 may only be connected with the client terminal 13 via the Internet. Further, if the user recognizes the address of the shared server terminal 11 for example, the host A having the information server terminal 10 and the client terminal 13 may only be interconnected via the Internet.

In addition, in the present embodiment, the information server terminal 10 and the mapping server terminal 12 operate on different hosts; however, if the WWW system is used, these server terminals may be installed on the same host. It should be noted that, if the WWW system is not used, the information server terminal 10, the shared server terminal 11, and the mapping server terminal 12 may all be installed on the same host.

Still further, in the present embodiment, the data of the virtual reality spaces for each specific area are stored in the host A (namely, the information server terminal 10); however, these data may also be handled in units of a department store or an amusement park for example.

In the above-mentioned preferred embodiments of the invention, the basic objects are supplied to each client terminal 13 via the network 15; however, it is also possible to store the basic objects in an information recording medium such as a CD-ROM and distribute the same to each user in advance. In this case, each client terminal 13 is constituted as shown in FIG. 21. To be more specific, in the embodiment of FIG. 21, a CD-ROM drive 100 is connected to the interface 48 to drive a CD-ROM 101 in which a virtual reality composed of basic objects is stored. The other part of the constitution is the same as that of FIG. 7.

Thus, provision of the data of basic objects from the CD-ROM 101 eliminates the time for transferring the data via the network 15, increasing processing speed.

Alternatively, the data of basic objects supplied from the information server terminal 10 may be stored in the storage device 50 only for the first time to be subsequently read for use.

Namely, the basic object data can be stored in the storage device 85 of the information server terminal 10 (for the cases 1 through 3), the storage device 50 of the client terminal 13 (for the cases 4 through 6) or the CD-ROM 101 of the client terminal 13 (for the cases 7 through 9).

On the other hand, the update object data can be stored in the storage device 85 of the information server terminal 10 (for the case 1) or the storage device 30 of the shared server terminal 11 (for the cases 2 through 9). In the case in which the update object data are stored in the shared server terminal 11, that shared server terminal may be the shared server terminal 11-1 in Japan (for the case 2, 5 or 8) or the shared server terminal 11-2 in US (for the case 3, 6 or 9) as shown in FIG. 23 for example. In this instance, the URL of the update object data is stored on the mapping server terminal 12.

If the update object data are stored on the information server terminal 10, the URL of the update object data is the default URL controlled by the information server terminal 10 (in the case of 1). Or if the shared server terminal 11 is specified by the user manually, the URL of update object data is the specified URL (in the case of 4 or 7).

Referring to FIG. 23, the data in each of the above-mentioned cases in FIG. 22 flows as follows. In the case 1, the basic object data are read from a VRML file (to be described later in detail) stored in an HDD (Hard Disk Drive), storage device of a WWW server terminal 121 operating as the information server terminal 10 to be supplied to the client terminal 13-1 for example via the Internet 15A operating as the network 15. The storage device of the WWW server terminal 121 also stores update object data. To be more specific, when the basic object data are read in the WWW server terminal 121, the URL of the corresponding update object data is stored as the default URL in the storage device of the WWW server terminal 121 in advance. From this default URL, the update object data are read to be supplied to the client terminal 13-1.

In the case 2, the basic object data are supplied from the WWW server terminal 121 to the client terminal 13-1 in Japan via the Internet 15A. On the other hand, the update object data are supplied from the shared server terminal 11-1 in Japan specified by the mapping server terminal 12 to the client terminal 13-1 via the Internet 15A.

In the case 3, the basic object data are supplied from the WWW server terminal 121 to the client terminal 13-2 in US via the Internet 15A. The update object data are supplied from the shared server terminal 11-2 in US specified by the mapping server terminal 12 via the Internet 15A.

In the case 4, the basic object data are stored in advance in the storage device 50 of the client terminal 13-1 in Japan for example. The update object data are supplied from the shared server terminal 11-2 in US for example specified by the client terminal 13-1.

In the case 5, the basic object data are stored in advance in the storage device 50 of the client terminal 13-1. The update object data are supplied from the shared server terminal 11-1 in Japan specified by the mapping server terminal 12 via the Internet 15A.

In the case 6, the basic object data are stored in advance in the storage device 50 of the client terminal 13-2 in US. The update object data are supplied from the shared server terminal 11-2 in US specified by the mapping server termi-

nal 12 to the client terminal 13-2 via the Internet 15A.

In the case 7, the basic object data stored in the CD-ROM 101 are supplied to the client terminal 13-1 in Japan for example via the CD-ROM drive 100. The update object data are supplied from the shared server terminal (for example, the shared server terminal 11-1 or 11-2) specified by the client terminal 13-1.

In the case 8, the basic object data are supplied from the CD-ROM 101 to the client terminal 13-1. The update object data are supplied from the shared server terminal 11-1 in Japan specified by the mapping server terminal 12 in Japan.

In the case 9, the basic object data are supplied from the CD-ROM 101 to the client terminal 13-2 in US. The update object data are supplied from the shared server terminal 11-2 in US specified by the mapping server terminal 12 via the Internet 15A.

In what follows, the software for transferring the above-mentioned virtual reality space data to display the same on the display device. In the WWW system, document data are transferred in a file described in HTML (Hyper Text Makeup Language). Therefore, text data are registered as an HTML file.

On the other hand, in the WWW system, three-dimensional graphics data are transferred for use by describing the same in VRML (Virtual Reality Modeling Language) or E-VRML (Enhanced Virtual Reality Modeling Language). Therefore, as shown in FIG. 24 for example, a WWW server terminal 112 of remote host 111 constituting the above-mentioned information server terminal 10, the shared server terminal 11 or the mapping server terminal 12 stores in its storage device both HTML and E-VRML files.

In an HTML file, linking between different files is performed by URL. In a VRML or E-VRML file, such attributes as WWWAnchor and WWWInline can be specified for objects. WWWAnchor is an attribute for linking a hyper text to an object, a file of link destination being specified by URL. WWWInline is an attribute for describing an external view of a building for example in parts of external wall, roof, window, and door for example. An URL can be related to each of the parts. Thus, also in VRML or E-VRML files, link can be established with other files by means of WWWAnchor or WWWInline.

For application software (a WWW browser) for notifying a WWW server terminal of a URL entered in a client terminal in the WWW system to interpret and display an HTML file coming from the WWW server terminal, Netscape Navigator (register trade name) (hereafter referred to simply as Netscape) of Netscape Communications, Inc. is known. For example, the client terminal 13 also uses Netscape to user the capability for transferring data with the WWW server terminal.

It should be noted, however, that this WWW browser can interpret an HTML file and display the same; but this WWW browser cannot interpret and display a VRML or E-VRML file although it can receive these files. Therefore, a VRML browser is required which can interpret a VRML file and an E-VRML file and draw and display them as a three-dimensional space.

Details of VRML are disclosed in the Japanese translation of "VRML: Browsing & Building Cyberspace," Mark Pesce, 1995, New Readers Publishing, ISBN 1-56205-498-8, the translation being entitled "Getting to Know VRML: Building and Browsing Three-Dimensional Cyberspace," translated by Kouichi Matsuda, Terunao Gamaike, Shouichi Takeuchi, Yasuaki Honda, Junichi Rekimoto, Masayuki Ishikawa, Takeshi Miyashita and Kazuhiro Hara, published March 25, 1996, Prenticehall Publishing, ISBN4-931356-37-0.

The applicant hereof developed CyberPassage (trademark) as application software that includes this VRML browser.

CyberPassage is composed of the following three software programs:

(1) CyberPassage Browser

This is a VRML browser which is based on VRML 1.0 and prefetches the capabilities (motion and sound) of VRML 2.0 to support E-VRML that provides moving picture capability. In addition, this provides the multi-user capability which can be connected to CyberPassage Bureau. For the script language, TCL/TK is used.

(2) CyberPassage Conductor

This is a VRML authoring system which is based on E-VRML based on VRML 1.0. This tool can not only simply construct a three-dimensional world but also give a behavior, a sound, and an image to the three-dimensional world with ease.

(3) CyberPassage Bureau

This is used for a server terminal system for enabling people to meet each other in a virtual reality space constructed on a network, connected from the CyberPassage Browser.

In the client terminals 13-1 and 13-2 shown in FIG. 23, CyberPassage Browser is installed in advance and exe-

cuted. In the shared server terminals 11-1 and 11-2, CyberPassage Bureau is installed in advance and executed. FIG. 25 shows an example in which CyberPassage Browser is installed from the CD-ROM 101 and executed on the client terminal 13-1 and, in order to implement the shared server terminal capability and the client terminal capability on a single terminal, CyberPassage Bureau and CyberPassage Browser are installed from the CD-ROM 101 in advance and executed.

As shown in FIG. 24, CyberPassage Browser transfers a variety of data with Netscape as a WWW browser based on NCAPI (Netscape Client Application Programming Interface) (trademark).

Receiving an HTML file and a VRML file or E-VRML file from the WWW server terminal 112 via the Internet, Netscape stores the received files in the storage device 50. Netscape processes only the HTML file. The VRML or E-VRML file is processed by CyberPassage Browser.

E-VRML is an enhancement of VRML 1.0 by providing behavior and multimedia (sound and moving picture) and was proposed to the VRML Community, September 1995, as the first achievement of the applicant hereof. The basic model (event model) for describing motions as used in E-VRML is inherited to the Moving Worlds proposal, one the current VRML 2.0 proposals.

In what follows, CyberPassage Browser will be outlined. A sample of this browser is provided in the CD-ROM furnished to the Japanese translation of "VRML: Browsing & Building Cyberspace," Mark Pesce, 1995, New Readers Publishing. After installing this browser, selecting "Manual" from "CyberPassage Folder" of "Program" of the start menu of Windows 95 (trademark) (or in Windows NT (trademark), the Program Manager) displays the instruction manual of the browser.

Operating environment of CyberPassage Browser:

The operating environment of CyberPassage Browser is as shown in FIG. 26. The minimum operating environment must be at least satisfied. However, Netscape Navigator need not be used if CyberPassage Browser is used as a standalone VRML browser. In particular, on using in the multi-user, the recommended operating environment is desirable.

Installing CyberPassage Browser:

CyberPassage Browser can be usually installed in the same way as Netscape is installed. To be more specific, vscplb3a.exe placed in the \Sony (trademark) directory of the furnished CD-ROM is used as follows for installation.

(1) Double-click vscplb3a.exe. The installation package is decompressed into the directory indicated by "Unzip To Directory" column. The destination directory may be changed as required.
(2) Click "Unzip" button. And the installation package is decompressed.
(3) "12 files unzipped successfully" appears. Click "OK" button.
(4) When "Welcome" windows appeared, click "NEXT" button.
(5) Carefully read "Software License Agreement". If agree, press "Yes" button; if not, press "No" button.
(6) Check the directory of installation. Default is "Program Files Sony\CyberPassage".
(7) If use of the above-mentioned directory is not wanted, press "Browse" button and select another directory. Then, press "Next" button.
(8) To read "readme" file here, click "Yes" button.
(9) When the installation has been completed, click "OK" button.

Starting CyberPassage Browser:

Before starting CyberPassage Browser, setting of Netscape Navigator must be performed. If CyberPassage Browser is used standalone, this setting need not be performed; just select "CyberPassage Folder ... CyberPassage" of "Program" of the start menu and start. The following setting may be automatically performed at installation.

(1) From "Options" menu of Netscape Navigator, execute "General Preference" and open "Preference" window. From the upper tab, select "Helper Applications".
(2) Check "File type" column for "x-world/x-vrml". If it is found, go to (4) below.
(3) Click "Create New Type" button. Enter "x-world" in "Mime Type" column and "x-vrml" in "Mime SubType" column. Click "OK" button. Enter "wrl" in "Extensions" column.
(4) Click "Launch the Application:" button. Enter the path name of CyberPassage Browser in the text column below this button. Default is
"\Program Files\Sony\CyberPassage\bin\vscp.exe".
(5) Click "OK" button.

Thus, the setting of Netscape Navigator has been completed. Start CyberPassage Browser as follows:

(1) In "File..Open File" menu of Netscape, read "readme. htm" of the sample CD-ROM.
(2) Clicking the link to the sample world, and CyberPassage is automatically started, loading the sample world from the CD-ROM.

Uninstalling CyberPassage Browser:

Execute "Uninstall" from "CyberPassage Folder" of "Program" of the start menu (or in Windows NT, the Program Manager), CyberPassage Browser will be uninstalled automatically.

Operating CyberPassage Browser:

CyberPassage Browser may be operated intuitively with the mouse 49b, the keyboard 49a, and the buttons on screen.

Moving around in the three-dimensional space:

In the three-dimensional space provided by VRML, such movements done in real world as forward, backward, rotate right and rotate left for example can be done. CyberPassage Browser implements such movements through the following interface:

By keyboard:

Each of the arrow keys, not shown, on the keyboard 49a generates the following corresponding movement:

→ rotate right;
← rotate left;
↑ move forward; and
↓ move backward.

By mouse:

Operate the mouse all with its left button.

(1) Keep the left button of the mouse 49b pressed in the window of CyberPassage and move the mouse
to the right for rotate right;
to the left for rotate left;
up for forward; and
down for backward.
The velocity of movement depends on the displacement of the mouse.
(2) With the Ctrl (Control) key, not shown, on the keyboard 49a kept pressed, click an object on screen to get to the front of the clicked object.
The following precautions are needed:

- If a collision with an object occurs, a collision sound is generated and the frame of screen blinks in red. If this happens, any forward movement is blocked. Moving directions must be changed.
- If the user is lost or cannot see anything in the space, click "Home" button on the right of screen, and the user can return to the home position.

Jumping eye:

While navigating through a three-dimensional space, the user may be lost at occasions. If this happens, the user can jump up to have an overhead view around.

(1) Click "Jump" button on the right of screen, and the user enters the jumping eye mode and jump to a position from which the user look down the world.
(2) Click "Jump" button again, and the user goes down to the original position.
(3) Alternatively, click any place in the world, and the user gets down to the clicked position.

Selecting an object:

When the mouse cursor is moved around on the screen, the shape of the cursor is transformed into a grabber (hand) on an object. In this state, click the left button of the mouse, and the action of the grabbed object can be called.

Loading a VRML file:

A VRML file can be loaded as follows:

- In Netscape, click the link to the VRML file;
- From "File..Open File" menu of CyberPassage, select the file having extension "wrl" on disc.
- In "File..Open URL" menu of CyberPassage, enter the URL.
- Click the object in the virtual space for which "URL" is displayed on the mouse cursor.

Operating toolbar buttons:

Buttons in the toolbar shown in FIG. 30 for example may be used to execute frequently used functions.

"Back"	Go back to the world read last.
"Forward"	Go to the world after going back to the previous world.
"Home"	Move to the home position.
"Undo"	Return a moved object to the original position (to be described later).
"Bookmark"	Attach a book to the current world or position.
"Scouter"	Enter in the scouter mode (to be described later).
"Jump"	Enter in the jump eye mode.

Scouter mode:

Each object placed in a virtual world may have a character string as information by using the E-VRML capability.

(1) Click "Scouter" button on the right of screen, and the user enters the scouter mode.
(2) When the mouse cursor moves onto an object having an information label, the information label is displayed.
(3) Click "Scouter" button again, and the user exits the scouter mode.

Moving an object around:

With "Alt" (Alternate) key, not shown, on the keyboard 49a pressed, press the left button of the mouse 49b on a desired object, and the user can move that object to a desired position with the mouse. This is like moving a coffee cup for example on s desk with the hand in the real world. In the virtual reality, however, objects that can be moved are those having movable attributes. In the sample world, objects may be moved by Digital HandyCam and the like. It should be noted that a moved object may be restored to the position before movement only once by using "Undo" button.

Connecting to a multi-user server terminal:

CyberPassage Browser provides a multi-user capability. The multi-user capability allows the sharing of a same VRML virtual space among a plurality of users. Currently, the applicant hereof is operating CyberPassage Bureau in the Internet on an experimental basis. By loading "Chat Room", the server terminal can be connected to share a same VRML virtual space with other users, walking together, turning off a room light, having a chat, and doing other activities.
This capability is started as follows:

(1) Make sure that the user's personal computer is linked to the Internet.
(2) Load the "Chatroom" of the sample world into CyberPassage Browser. This is done by loading "\Sony\readme.htm" from the sample CD-ROM clicking "Chat Room".
(3) Appearance of "Connected to VS Server" in the message window indicates successful connection.

Thus, the connection to the server has been completed. Interaction with other users is of the following two types:

(a) Telling others of an action:
This is implemented by clicking any of "Hello", "Smile", "Wao!", "Wooo!!", "Umm...", "Sad", "Bye" and so on in

the "Action" window (refer to FIG. 32). The actions include rotating the user himself (avatar) right or left 36 degrees, 180 degrees or 360 degrees.

(b) Talking with others:

This capability is implemented by opening the "Chat" window in "View..Chat" menu and entering a message from the keyboard 49a into the bottom input column.

Multi-user worlds:

The following three multi-user worlds are provided by the sample CD-ROM. It should be noted that chat can be made throughout these three worlds commonly.

(1) Chat Room

This is a room in which chat is made mainly. Some objects in this room are shared among multiple users. There are objects which are made gradually transparent every time the left button of the mouse is pressed, used to turn off room lights, and hop when clicked, by way of example. Also, there are hidden holes and the like.

(2) Play with a ball!!

When a ball in the air is clicked, the ball flies toward the user who clicked the ball. This ball is shared by all users sharing that space to play catch.

(3) Share your drawing

A whiteboard is placed in the virtual space. When it is clicked by the left button, the shared whiteboard is displayed. Dragging with the left button draws a shape on the whiteboard, the result being shared by the users sharing the space.

In addition to CyberPassage Browser, the sample CD-ROM stores CyberPassage Conductor and some sample VRML files. CyberPassage Bureau is not stored in this CD-ROM, however. It can be downloaded via the Internet 15A from Home Page URL=http://vs.sony.co.jp/ provided by the company at which the applicant hereof works. The company also offers, via the Internet, the multi-user world URL=http://japan.park.org/japan/Sony/3Dworld/Circus/.

Use of CyberPassage Bureau allows the users using CyberPassage Browser to enter together a world described in VRML 1.0. To provide a three-dimensional virtual reality space for enabling this capability, a file described in VRML 1.0 must be prepared. Then, CyberPassage Bureau (hereinafter appropriately referred to simply as the bureau) is operated on an appropriate personal computer. Further, a line telling the personal computer on which Bureau is operating is added to the VRML 1.0 file. The resultant VRML file is read into CyberPassage Browser (hereinafter appropriately referred to simply as the browser), the browser is connected to Bureau.

If this connection is successful, the users in the virtual world can see each other and talk each other. Further, writing an appropriate script into the file allows each user to express emotions through a use of action panel.

CyberPassage Browser provides interface for action description through use of TCL. This interface allows each user to provide behaviors to objects in the virtual world and, if desired, make the resultant objects synchronize between browsers. This allows a plurality of users to play a three-dimensional game if means for it are prepared.

To enjoy a multi-user virtual world, three steps are required, preparation of a VRML file, start of CyberPassage Bureau, and connection of CyberPassage Browser.

Preparing a VRML file:

First, a desired VRML. 1.0 file must be prepared. This file is created by oneself or a so-called freeware is used for this file. This file presents a multi-user virtual world.

Starting CyberPassage Bureau:

The operating environment of CyberPassage Bureau is as follows:

CPU ... 486SX or higher
OS ... Window 95
Memory ... 12M or higher

CyberPassage Bureau can be started only by executing the downloaded file. When the CyberPassage Bureau is executed, only a menu bar indicating menus is displayed as shown in FIG. 27. Just after starting, CyberPassage Bureau is in stopped state. Selecting "status" by pulling down "View" menu displays the status window that indicates the current CyberPassage Bureau state. At the same time, a port number waiting for connection is also shown.

Immediately after starting, CyberPassage Bureau is set such that it waits for connection at TCP port No. 5126. To

change this port number, pull down "options" menu and select "port". When entry of a new port number is prompted, enter a port number 5000 or higher. If the user does not know which port number to enter, default value (5126) can be used.

To start CyberPassage Bureau from the stopped state, pull down "run" menu and select "start". The server terminal comes to be connected at the specified port. At this moment, the state shown in "status" window becomes "running" as shown in FIG. 27.

Thus, after completion of the bureau preparations, when CyberPassage Browser comes to connect to the CyberPassage Bureau, it tells the position of the browser to another browser or transfers information such as conversation and behavior.

The "status" window of CyberPassage Bureau is updated every time connection is made by the user, so that using this window allows the user to make sure of the users existing in that virtual world.

Connection of CyberPassage Browser:

Connection of the CyberPassage Browser requires the following two steps. First, instruct CyberPassage Browser to which bureau it is to be connected. This is done by writing an "info" node to the VRML file. Second, copy the user's avatar file to an appropriate direction so that you can be seen from other users.

Adding to a VRML file:

When writing a line specifying the bureau to be connected to the VRML file, a name of the personal computer on which the bureau is operating and the port number must be specified in the following format:

DEF VsServer Info {string"server name:port number"}

The server terminal name is a machine name as used in the Internet on which the bureau is operating (for example, fred.research.sony.com) or its IP address (for example, 123.231.12.1). The port number is one set in the bureau.

Consequently, the above-mentioned format becomes as follows for example:

DEF VsServer Info {string"fred.research.sony.com:5126"}

In the example of FIG. 25, the IP address of the shared server terminal 11-1 is 43.0.35.117, so that the above-mentioned format becomes as follows:

DEF VsServer Info {string"43.0.35.117:5126"}

This is added below the line shown below of the prepared VRML file:

VRML V1.0 ascii

Copying an avatar file:

When CyberPassage Browser gets connected to CyberPassage Bureau, the former notifies the latter of its avatar. When a specific avatar meets another, the bureau notifies the other browsers of the meeting information to make the specific avatar be displayed on the other browsers. For this reason, it is required to copy the VRML file of the specific avatar to an appropriate place in advance.

FIG. 27 shows an example of display for selecting an avatar. In this example, a desired avatar can be selected as own avatar from "person.wrl", boy.wrl" or "girl.wrl".

When the selected avatar file is copied to the same directory in which own VRML file is stored, the browser searches the directory for the "{person,boy,girl}. wrl" file as the avatar file when the browser loads the VRML file.

Thus, to share a specific VRML file, CyberPassage Bureau may only be operated, the VsServer Info node be added to the VRML file, and "{person.boy.girl}wrl" be copied to the same file in which the VRML file is stored. Then, when the VRML file is set up such that the same can be loaded from other users, any user who reads the file through CyberPassage gets connected to the bureau.

As shown in FIG. 25, it is assumed that the shared server terminal 11-1 uses an avatar nicknamed Koutarou and the client terminal 13-1 uses an avatar nicknamed Minami to walk through one of the multi-user worlds, CIRCUS PARK. In doing so, the shared server terminal 11-1 selects a male avatar "boy.wrl" as shown in FIG. 27 for example. As shown in FIG. 28, when "View" menu is pulled down and "Preferences" is selected, a screen as shown in FIG. 29 is displayed. On this screen, the user specifies "Koutarou" as the name (Nick Name) of the avatar selected in FIG. 27.

Likewise, the user of the client terminal 13-1 selects "girl.wrl" as own avatar for example, specifies "Minami" as its nickname, and enters CIRCUS PARK. When avatar Koutarou of the shared server terminal 11-1 and avatar Minami of the client terminal 13-1 move to positions close enough to each other, avatar Minami is displayed on the display device 25 of the shared server terminal 11-1 as shown in FIG. 28. Likewise, avatar Koutarou is displayed on the display device 45 of the client terminal 13-1 as shown in FIG. 31 to be described later.

It should be noted that, in FIGS. 25 and 27 through 31, "K" is assigned to the display screen of the display device 25 that avatar Koutarou sees and "M" is assigned to the display screen of the display device 45 that avatar Ninami sees.

As shown in the figures, each display device displays only the three-dimensional virtual reality space (including the image of the other avatar) as viewed from own avatar, and own avatar itself is not displayed.

Thus, when a plurality of avatars approach each other close enough in a specific space (namely, when own avatar is displayed on the display device of the other user's display device), a chat can be performed by selecting "Chat" from "View" menu shown in FIG. 30 for example. FIG. 30 shows an example of display on the display device 25 of the shared server terminal 11-1 when avatars Koutarou and Minami are having a chat.

As shown in FIG. 30, the messages entered so far from the keyboards of the terminals concerned are shown in the "Chat" window. Characters entered by the user is once displayed in the display area at the bottom of the "Chat" window; when the Enter key, not shown, of the keyboard 49a is pressed, the entered message (character string) is transmitted to the other user. For example, when message "Yes, it's my first visit today" has come from avatar Minami (the client terminal 13-1) to the shared server terminal 11-1, this message is displayed in a balloon above avatar Minami in the CyberPassage Bureau window on the display device 25 of the shared server terminal 11-1 and, at the same time, displayed in the "Chat" windows after the past messages.

FIG. 31 shows an example of display on the display device 45 of the client terminal 13-1 when message "Let's go see the merry-go-round" has been entered from the shared server terminal 11-1. In this case, too, the message is displayed in a balloon above avatar Koutarou in the "CIRCUS PARK" window and, at the same time, displayed in the "Chat" window after the past messages.

An example of display of FIG. 32 shows the case in which "Hello" button has been pressed on the client terminal 13-1. At this time, as shown in FIG. 32, an image in which avatar Minami raises its right hand is displayed on the shared server terminal 11-1 and, at the same time, voice message "Hello" is heard from the loudspeaker 27.

When the user leaves his terminal, his avatar may be put in the sleep state. For example, to put avatar Minami in the sleep state, "Active" button, one of the action buttons in the action windows shown in FIG. 31, is clicked on the client terminal 13-1 to change the button to "Sleep" button as shown in FIG. 33. Avatar Minami enters the sleep state. In the sleep state, avatar Minami displayed on the displayed device 25 of the shared server terminal 11-1 is sitting on the ground as shown in FIG. 34. The user of the shared server terminal 11-1 can know from this state (namely, the user avatar Minami has left the client terminal 13-1) that avatar Minami is in the sleep state. When "Sleep" button is clicked in the sleep state, the button returns to "Active" button again.

Thus, the users can enjoy themselves walking through the Circus Park as a three-dimensional virtual reality space.

The present invention has been described by taking for example the case in which the Internet is used for the network 15 and the WWW system is used. It will be apparent to those skilled in the art that a global communications network other than the Internet may be used for the network 15 and a communications system other than the WWW system may be used to achieve the above-mentioned objects of the invention.

As described above, according to the present invention, in the three-dimensional virtual reality sharing method, the three-dimensional virtual reality sharing system, the information recording medium, the information recording method, the information transmission medium, and the information transmission method, if the state of an update object is updated by a client terminal, the update data about the update done are sent from the shared server terminal to the other client terminals via a global communication network. Consequently, the novel setup allows unspecified users to share the same three-dimensional virtual reality space in a range covered by the global communications network.

The novel setup also allows the users to access a shared server terminal with ease.

Further, according to the present invention, in the information processing method, the client terminal, the information recording medium, the information recording method, the information transmission medium, and the information transmission method, data about an update object are retrieved from the shared server terminal and, at the same time, when the state of an update object is updated, the update data about the update done are sent to the shared server terminal. Consequently, the novel setup allows the avatar of the user of a client terminal to share a same three-dimensional virtual reality space with avatars of the other client terminals.

Further, according to the present invention, in the information processing method, the server terminal, the information recording medium, the information recording method, the information transmission medium, and the information transmission method, if the shared server terminal receives update data about the update of the state of update object from a client terminal, the shared server terminal sends the received update data to the other client terminals. Consequently, the novel setup allows a plurality of client terminals to share a three-dimensional virtual reality space via the update objects.

While the preferred embodiments of the present invention have been described using specific terms, such description is for illustrative purposes only, and it is to be understood that changes and variations may be made without departing from the spirit or scope of the appended claims.

Claims

1. A method of sharing a three-dimensional virtual reality space wherein:
   three-dimensional graphics (13-2, 13-3) data associated with a basic object to be used by a plurality of users

(10, 11, 12) in a shared manner and an update object (13-1) of which state is updated according to an operation performed by each of said plurality of users are acquired and a plurality of client terminals for displaying a three-dimensional virtual reality space are connected to a shared server terminal (14) for controlling update data associated with update of the state of said update object notified from each of said plurality of client terminals via a global communication network (15) interconnected with unspecified terminals; and,

if the state of said update object in said three-dimensional virtual reality space is updated by any of said plurality of client terminals (10, 11, 12), the client terminal that made the update notifies said shared server terminal of update data associated with the update via said global communication network and said shared server terminal notifies the other client terminals of said plurality of client terminals of said update data about the update via said global communication network.

2. The method of sharing a three-dimensional virtual reality space according to claim 1, wherein said global communication network (15) transfers said update data between unspecified said plurality of client terminals and said shared server terminal based on a communication protocol called Transmission Control Protocol/Internet Protocol (TCP/IP).

3. The method of sharing a three-dimensional virtual reality space according to claim 2, wherein said three-dimensional graphics data associated with said basic object and said update object for displaying said three-dimensional virtual reality space are stored in an information server terminal (14) connected to said global communication network in a state described in Virtual Reality Modeling Language (VRML), said information server terminal transferring, upon request from any of said plurality of client terminals, said three-dimensional graphics data described in said VRML from said information server terminal to the requesting client terminal based on a communication protocol called Hyper Text Transfer Protocol (HTTP).

4. The method of sharing a three-dimensional virtual reality space according to claim 3, wherein:

said information server terminal (14) stores said three-dimensional graphics data associated with said basic object and said update object for displaying said three-dimensional virtual reality space by making said three-dimensional graphics data correspond to specification information for uniquely specifying a storage location of said three-dimensional graphics data;

said client terminal notifies said information server terminal of said specification information via said global communication network; and

said information server terminal (14) transfers said three-dimensional graphics data for displaying said three-dimensional virtual reality space specified in said specification information by said plurality of client terminals via said global communication network to said plurality of client terminals via said global communication network.

5. The method of sharing a three-dimensional virtual reality space according to claim 1, wherein said three-dimensional graphics data associated with said basic object and said update object for displaying said three-dimensional virtual reality space are supplied to said plurality of client terminals (10, 11, 12) via a recording medium readable by said plurality of client terminals.

6. The method of sharing a three-dimensional virtual reality space according to claim 1, wherein said update data associated with update of the state of said update object indicate movement of said update object inside said three-dimensional virtual reality space.

7. The method of sharing a three-dimensional virtual reality space according to claim 1, wherein, if another update object is added by any of said plurality of client terminals (10, 11, 12) to said three-dimensional virtual reality space, three-dimensional graphics data about said another update object are notified to said shared server terminal and said three-dimensional graphics data about said another update object are notified to the other client terminals of said plurality of client terminals.

8. The method of sharing a three-dimensional virtual reality space according to claim 1, wherein:

a mapping server terminal for controlling address information for addressing said shared server terminal for controlling said update data is connected to said global communication network;

if requested for said address information for addressing said shared server terminal from any of said plurality of client terminals via said global communication network, said mapping server terminal supplies said address information to the requesting client terminal via global communication network; and

said requesting client terminal accesses said shared server terminal based on said address information.

9. The method of sharing a three-dimensional virtual reality space according to claim 8, wherein:

a plurality of shared server terminals (10, 11, 12) for controlling said update data are connected to said global communication network (15);

said mapping server terminal connected to said global communication network controls a plurality pieces of address information for addressing each of said plurality of shared server terminals;

if said mapping server terminal receives a request for the address information for addressing any of said plurality of shared server terminals from any of said plurality of client terminals via said global communication network (15), said mapping server terminal selects from among said plurality pieces of address information the optimum address information for the requesting client terminal and supplies the selected address information to the requesting client terminal via said global communication network; and

the requesting client terminal accesses the shared server terminal corresponding to said selected address information.

10. The method of sharing a three-dimensional virtual reality space according to claim 9, wherein:

if said mapping server terminal receives a request from any of said plurality of client terminals via said global communication network (15) for said address information for addressing any of said plurality of shared server terminals (10, 11, 12),

said mapping server terminal identifies, based on a source address of the requesting client terminal, a geographical area in which the requesting client terminal is installed;

selects the address information from among said plurality pieces of address information for addressing any of said plurality of shared server terminals that is installed in the geographical proximity of the identified area; and

supplies the selected address information to the requesting client terminal via said global communication network.

11. The method of sharing a three-dimensional virtual reality space according to claim 10, wherein:

if said mapping server terminal receives a request from any of said plurality of client terminals via said global communication network for the address information for addressing any of said plurality of shared server terminals,

said mapping server terminal sends an inquiry for a domain name corresponding to the requesting client terminal to a domain name server that controls a table listing relationship between source addresses of the client terminals and domain names to which the source addresses are assigned;

identifies a geographical area in which the requesting client terminal is installed based on the corresponding domain name;

selects the address information from among said plurality pieces of address information for addressing any of said plurality of shared server terminals (10, 11, 12) that is installed in the geographical proximity of the identified area; and

supplies the selected address information to the requesting client terminal via said global communication network.

12. The method of sharing a three-dimensional virtual reality space according to claim 9, wherein:

if said mapping server terminal receives a request from any of said plurality of client terminals via said global communication network for the address information for addressing any of said plurality of shared server terminals,

said mapping server terminal selects, from among said plurality pieces of address information for addressing said plurality of shared server terminals, the address information for addressing any of said plurality of shared server terminals that is accessed less frequently by said plurality of client terminals than others, as optimum address information for the requesting client terminal; and

supplies the selected address information to the requesting client terminal via said global communication network (15).

13. A system for sharing a three-dimensional virtual reality space wherein:

three-dimensional graphics data associated with a basic object to be used by a plurality of users in a shared manner and an update object of which state is updated according to an operation performed by each of said plurality of users are acquired and a plurality of client terminals for displaying a three-dimensional virtual reality space are connected to a shared server terminal for controlling update data associated with update of the state of said update object notified from each of said plurality of client terminals via a global communication network interconnected with unspecified terminals; and,

if the state of said update object in said three-dimensional virtual reality space is updated by any of said plurality of client terminals, the client terminal that made the update notifies said shared server terminal of update data associated with the update via said global communication network and said shared server terminal notifies the other client terminals of said plurality of client terminals of said update data about the update via said global communication network (15).

14. An information recording medium for use in a system for sharing a three-dimensional virtual reality space, said information recording medium recording a computer program comprising the steps of:

acquiring three-dimensional graphics data associated with a basic object to be used by a plurality of users in a shared manner and an update object of which state is updated according to an operation performed by each of said plurality of users and connecting a plurality of client terminals (10, 11, 12) for displaying a three-dimensional virtual reality space to a shared server terminal for controlling update data associated with update of the state of said update object notified from each of said plurality of client terminals via a global communication network (15) interconnected with unspecified terminals (10, 11, 12); and,
if the state of said update object in said three-dimensional virtual reality space is updated by any of said plurality of client terminals (10, 11, 12), notifying said shared server terminal of update data associated with the update via said global communication network and notifying the other client terminals of said plurality of client terminals of said update data about the update from said shared server terminal via said global communication network;

wherein said computer program is readable and executable by at least one of the client terminal and the shared server terminal.

15. An information recording method for use in a system for sharing a three-dimensional virtual reality space, said information recording method recording a computer program on a recording medium, said computer program comprising the steps of:

acquiring three-dimensional graphics data associated with a basic object to be used by a plurality of users in a shared manner and an update object of which state is updated according to an operation performed by each of said plurality of users and connecting a plurality of client terminals (10, 11, 12) for displaying a three-dimensional virtual reality space to a shared server terminal for controlling update data associated with update of the state of said update object notified from each of said plurality of client terminals via a global communication network (15) interconnected with unspecified terminals; and,
if the state of said update object in said three-dimensional virtual reality space is updated by any of said plurality of client terminals, notifying said shared server terminal of update data associated with the update via said global communication network and notifying the other client terminals of said plurality of client terminals of said update data about the update from said shared server terminal via said global communication network;

wherein said computer program is readable and executable by at least one of the client terminal and the shared server terminal.

16. An information transmission medium for use in a system for sharing a three-dimensional virtual reality space, said information transmission medium transmitting a computer program comprising the steps of:

acquiring three-dimensional graphics data associated with a basic object to be used by a plurality of users in a shared manner and an update object of which state is updated according to an operation performed by each of said plurality of users and connecting a plurality of client terminals for displaying a three-dimensional virtual reality space to a shared server terminal for controlling update data associated with update of the state of said update object notified from each of said plurality of client terminals via a global communication network (15) interconnected with unspecified terminals; and,
if the state of said update object in said three-dimensional virtual reality space is updated by any of said plurality of client terminals, notifying said shared server terminal of update data associated with the update via said global communication network and notifying the other client terminals of said plurality of client terminals of said update data about the update from said shared server terminal via said global communication network;

wherein said computer program is receivable and executable by at least one of the shared server terminal and the client terminal and transmitted to at least one of the shared server terminal and the client terminal.

17. An information transmission method for use in a system for sharing a three-dimensional virtual reality space, said information transmission method transmitting a computer program comprising the steps of:

acquiring three-dimensional graphics data associated with a basic object to be used by a plurality of users in a shared manner and an update object of which state is updated according to an operation performed by each of said plurality of users and connecting a plurality of client terminals (10, 11, 12) for displaying a three-dimen-

sional virtual reality space to a shared server terminal for controlling update data associated with update of the state of said update object notified from each of said plurality of client terminals via a global communication network (15) interconnected with unspecified terminals; and,

if the state of said update object in said three-dimensional virtual reality space is updated by any of said plurality of client terminals, notifying said shared server terminal of update data associated with the update via said global communication network and notifying the other client terminals of said plurality of client terminals of said update data about the update from said shared server terminal via said global communication network;

wherein said computer program is receivable and executable by at least one of the shared server terminal (14) and the client terminal and transmitted to at least one of the shared server terminal and the client terminal.

18. An information processing method for a plurality of client terminals in a system for sharing a three-dimensional virtual reality space, said plurality of client terminals being provided in a system for sharing said three-dimensional virtual reality space to acquire three-dimensional graphics data associated with a basic object to be used by a plurality of users in a shared manner and an update object of which state is updated according to an operation performed by each of said plurality of users to display said three-dimensional virtual reality space and being connected to a shared server terminal (14) for controlling update data associated with update of the state of said update object notified from each of said plurality of client terminals (10, 11, 12) via a global communication network (15) interconnected with unspecified terminals, said information processing method comprising the steps of:

acquiring said three-dimensional graphics data associated with said basic object and said update object;
drawing the three-dimensional virtual reality space having space coordinates specified by a user based on the acquired three-dimensional graphics data and displaying the drawn three-dimensional virtual reality space on a display device;
acquiring said update data from said shared server terminal (14) via said global communication network (15);
updating the state of the update object to be displayed on said display device based on the acquired update data; and
if the state of said update object has been updated according to the operation of the user, notifying said shared server terminal of update data associated with the update via said global communication network.

19. A client terminal in a three-dimensional virtual reality space sharing system, said client terminal being one of a plurality of client terminals (11, 12, 13) for acquiring three-dimensional graphics data associated with a basic object to be used by a plurality of users in a shared manner and an update object of which state is updated according to an operation performed by each of said plurality of users to display said three-dimensional virtual reality space and being connected to a shared server terminal for controlling update data associated with update of the state of said update object notified from each of said plurality of client terminals via a global communication network (15) interconnected with unspecified terminals, said client terminal (10, 11, 12) comprising:

an acquiring graphics data means for acquiring said three-dimensional graphics data associated with said basic object and said update object;
a drawing means for drawing the three-dimensional virtual reality space having space coordinates specified by a user based on the acquired three-dimensional graphics data and displaying the drawn three-dimensional virtual reality space on a display device;
an acquiring update data means for acquiring said update data from said shared server terminal via said global communication network;
an updating means for updating the state of the update object to be displayed on said display device based on the acquired update data; and
if the state of said update object has been updated according to the operation of the user, a notifying update data means for notifying said shared server terminal of update data associated with the update via said global communication network (15).

20. An information recording medium for use in a client terminal in a three-dimensional virtual reality space sharing system, said client terminal being one of a plurality of client terminals (10, 11, 12) for acquiring three-dimensional graphics data associated with a basic object to be used by a plurality of users in a shared manner and an update object of which state is updated according to an operation performed by each of said plurality of users to display said three-dimensional virtual reality space and being connected to a shared server terminal (14) for controlling update data associated with update of the state of said update object notified from each of said plurality of client terminals via a global communication network interconnected with unspecified terminals, said information recording medium recording a computer program in a state readable and executable by the client terminal, said computer

program comprising the steps of:

acquiring said three-dimensional graphics data associated with said basic object and said update object;
drawing the three-dimensional virtual reality space having space coordinates specified by a user based on the acquired three-dimensional graphics data and displaying the drawn three-dimensional virtual reality space on a display device;
acquiring said update data from said shared server terminal (14) via said global communication network (15);
updating the state of the update object to be displayed on said display device based on the acquired update data; and
if the state of said update object has been updated according to the operation of the user, notifying said shared server terminal of update data associated with the update via said global communication network.

21. An information recording method for use in a client terminal in a three-dimensional virtual reality space sharing system, said client terminal being one of a plurality of client terminals (10, 11, 12) for acquiring three-dimensional graphics data associated with a basic object to be used by a plurality of users in a shared manner and an update object of which state is updated according to an operation performed by each of said plurality of users to display said three-dimensional virtual reality space and being connected to a shared server terminal for controlling update data associated with update of the state of said update object notified from each of said plurality of client terminals via a global communication network (15) interconnected with unspecified terminals, said information recording method recording a computer program in an information recording medium in a state readable and executable by the client terminal, said computer program comprising the steps of:

acquiring said three-dimensional graphics data associated with said basic object and said update object;
drawing the three-dimensional virtual reality space having space coordinates specified by a user based on the acquired three-dimensional graphics data and displaying the drawn three-dimensional virtual reality space on a display device;
acquiring said update data from said shared server terminal (14) via said global communication network (15);
updating the state of the update object to be displayed on said display device based on the acquired update data; and
if the state of said update object has been updated according to the operation of the user, notifying said shared server terminal of update data associated with the update via said global communication network.

22. An information transmission medium for use in a client terminal in a three-dimensional virtual reality space sharing system, said client terminal being one of a plurality of client terminals (10, 11, 12) for acquiring three-dimensional graphics data associated with a basic object to be used by a plurality of users in a shared manner and an update object of which state is updated according to an operation performed by each of said plurality of users to display said three-dimensional virtual reality space and being connected to a shared server terminal (14) for controlling update data associated with update of the state of said update object notified from each of said plurality of client terminals via a global communication network (15) interconnected with unspecified terminals, said information transmission medium transmits a computer program to the client terminal in a state receivable and executable by the same, said computer program comprising the steps of:

acquiring said three-dimensional graphics data associated with said basic object and said update object;
drawing the three-dimensional virtual reality space having space coordinates specified by a user based on the acquired three-dimensional graphics data and displaying the drawn three-dimensional virtual reality space on a display device;
acquiring said update data from said shared server terminal via said global communication network;
updating the state of the update object to be displayed on said display device based on the acquired update data; and
if the state of said update object has been updated according to the operation of the user, notifying said shared server terminal of update data associated with the update via said global communication network.

23. An information transmission method for use in a client terminal in a three-dimensional virtual reality space sharing system, said client terminal being one of a plurality of client terminals (10, 11, 12) for acquiring three-dimensional graphics data associated with a basic object to be used by a plurality of users in a shared manner and an update object of which state is updated according to an operation performed by each of said plurality of users to display said three-dimensional virtual reality space and being connected to a shared server terminal (14) for controlling update data associated with update of the state of said update object notified from each of said plurality of client terminals via a global communication network interconnected with unspecified terminals, said information trans-

mission method transmitting a computer program to the client terminal in a state receivable and executable by the same, said computer program comprising the steps of:

acquiring said three-dimensional graphics data associated with said basic object and said update object;
drawing the three-dimensional virtual reality space having space coordinates specified by a user based on the acquired three-dimensional graphics data and displaying the drawn three-dimensional virtual reality space on a display device;
acquiring said update data from said shared server terminal via said global communication network;
updating the state of the update object to be displayed on said display device based on the acquired update data; and
if the state of said update object has been updated according to the operation of the user, notifying said shared server terminal of update data associated with the update via said global communication network (15).

24. An information processing method for a shared server terminal in a three-dimensional virtual reality space sharing system wherein a plurality of client terminals (10, 11, 12) for acquiring three-dimensional graphics data associated with a basic object to be used by a plurality of users in a shared manner and an update object of which state is updated according to an operation performed by each of said plurality of users to display said three-dimensional virtual reality space are connected to the shared server terminal for controlling update data associated with update of the state of said update object notified from each of said plurality of client terminals via a global communication network interconnected with unspecified terminals, said information processing method comprising the steps of:

if the state of said update object has been updated according to the operation of a user of any of said plurality of client terminals, acquiring update data associated with the update from the client terminal via said global communication network; and
notifying the other client terminals of the acquired update data via said global communication network (15).

25. A shared server terminal in a three-dimensional virtual reality space sharing system wherein a plurality of client terminals for acquiring three-dimensional graphics data associated with a basic object to be used by a plurality of users in a shared manner and an update object of which state is updated according to an operation performed by each of said plurality of users to display said three-dimensional virtual reality space are connected to the shared server terminal for controlling update data associated with update of the state of said update object notified from each of said plurality of client terminals (10, 11, 12) via a global communication network (15) interconnected with unspecified terminals, said shared server terminal comprising:

if the state of said update object has been updated according to the operation of a user of any of said plurality of client terminals, an acquiring update data means for acquiring update data associated with the update from the client terminal via said global communication network; and
a notifying update data means for notifying the other client terminals of the acquired update data via said global communication network.

26. An information recording medium for use in a shared server terminal in a three-dimensional virtual reality space sharing system wherein a plurality of client terminals for acquiring three-dimensional graphics data associated with a basic object to be used by a plurality of users in a shared manner and an update object of which state is updated according to an operation performed by each of said plurality of users to display said three-dimensional virtual reality space are connected to the shared server terminal for controlling update data associated with update of the state of said update object notified from each of said plurality of client terminals via a global communication network interconnected with unspecified terminals, said information recording medium recording a computer program in a state readable and executable by said shared server terminal (14), said computer program comprising the steps of:

if the state of said update object has been updated according to the operation of a user of any of said plurality of client terminals, acquiring update data associated with the update from the client terminal via said global communication network (15); and
notifying the other client terminals (10, 11, 12) of the acquired update data via said global communication network.

27. An information recording method for use in a shared server terminal in a three-dimensional virtual reality space sharing system wherein a plurality of client terminals for acquiring three-dimensional graphics data associated with a basic object to be used by a plurality of users in a shared manner and an update object of which state is updated according to an operation performed by each of said plurality of users to display said three-dimensional virtual real-

ity space are connected to the shared server terminal (14) for controlling update data associated with update of the state of said update object notified from each of said plurality of client terminals (10, 11, 12) via a global communication network (15) interconnected with unspecified terminals, said information recording method recording a computer program in an information recording medium in a state readable and executable by said shared server terminal, said computer program comprising the steps of:

if the state of said update object has been updated according to the operation of a user of any of said plurality of client terminals (10, 11, 12), acquiring update data associated with the update from the client terminal via said global communication network; and
notifying the other client terminals of the acquired update data via said global communication network.

28. An information transmission medium for use in a shared server terminal in a three-dimensional virtual reality space sharing system wherein a plurality of client terminals (10, 11, 12) for acquiring three-dimensional graphics data associated with a basic object to be used by a plurality of users in a shared manner and an update object of which state is updated according to an operation performed by each of said plurality of users to display said three-dimensional virtual reality space are connected to the shared server terminal (14) for controlling update data associated with update of the state of said update object notified from each of said plurality of client terminals (10, 11, 12) via a global communication network (15) interconnected with unspecified terminals, said information transmission medium transmitting a computer program in a state readable and executable by said shared server terminal to the same, said computer program comprising the steps of:

if the state of said update object has been updated according to the operation of a user of any of said plurality of client terminals, acquiring update data associated with the update from the client terminal via said global communication network; and
notifying the other client terminals of the acquired update data via said global communication network.

29. An information transmission method for use in a shared server terminal (14) in a three-dimensional virtual reality space sharing system wherein a plurality of client terminals (10, 11, 12) for acquiring three-dimensional graphics data associated with a basic object to be used by a plurality of users in a shared manner and an update object of which state is updated according to an operation performed by each of said plurality of users to display said three-dimensional virtual reality space are connected to the shared server terminal for controlling update data associated with update of the state of said update object notified from each of said plurality of client terminals via a global communication network interconnected with unspecified terminals, said information transmission method transmitting a computer program to said shared server terminal in a state readable and executable by the same, said computer program comprising the steps of:

if the state of said update object has been updated according to the operation of a user of any of said plurality of client terminals, acquiring update data associated with the update from the client terminal via said global communication network (15); and
notifying the other client terminals of the acquired update data via said global communication network (15).

FIG. 1

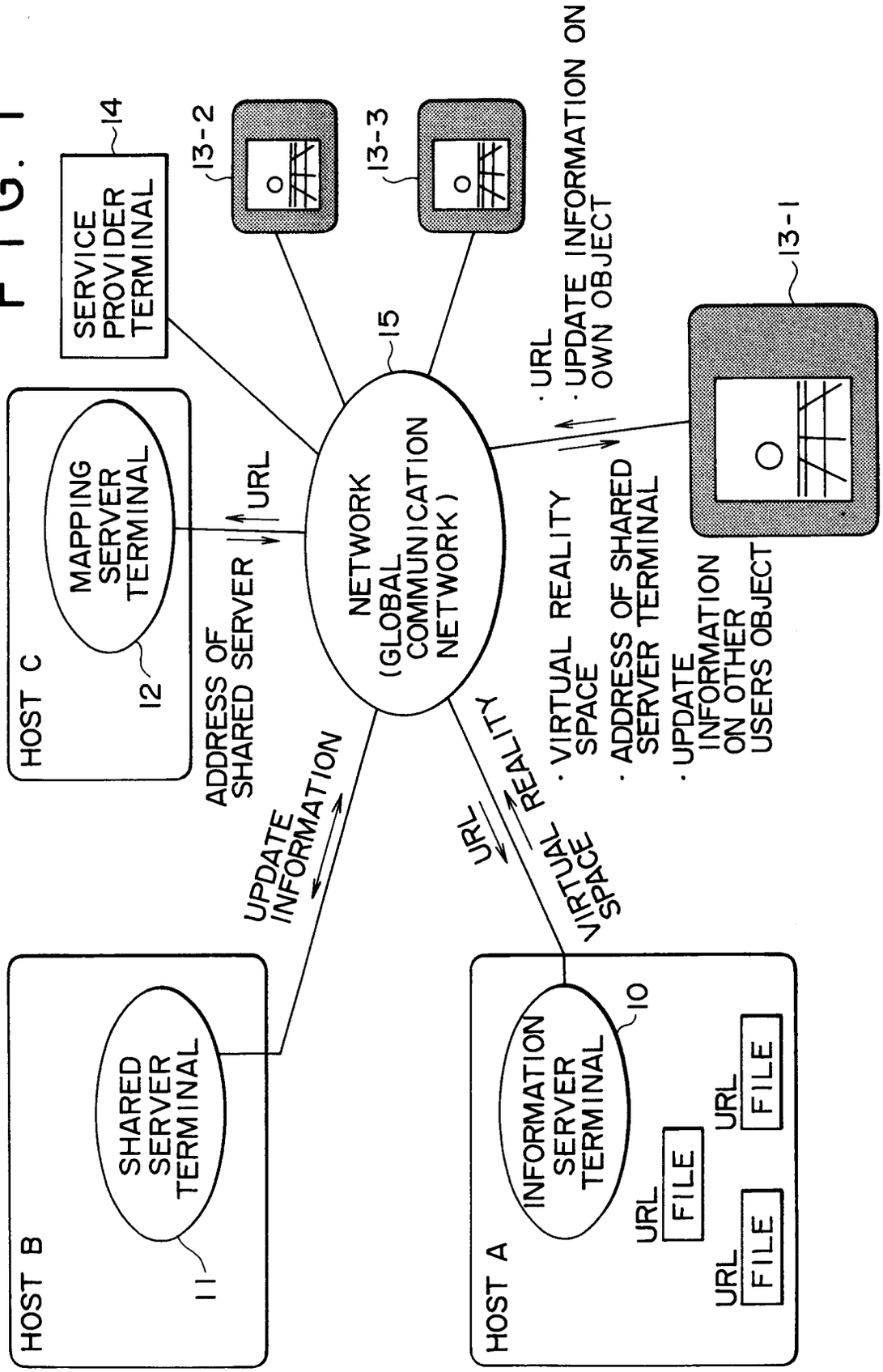
SERVICE PROVIDER TERMINAL
14
13-2
13-3
13-1
15
NETWORK (GLOBAL COMMUNICATION NETWORK)
HOST C
MAPPING SERVER TERMINAL
12
URL
ADDRESS OF SHARED SERVER
· URL
· UPDATE INFORMATION ON OWN OBJECT
· VIRTUAL REALITY SPACE
· ADDRESS OF SHARED SERVER TERMINAL
· UPDATE INFORMATION ON OTHER USERS OBJECT
UPDATE INFORMATION
URL
VIRTUAL REALITY SPACE
HOST B
SHARED SERVER TERMINAL
11
HOST A
INFORMATION SERVER TERMINAL
10
URL
FILE
URL
FILE
URL
FILE

FIG. 2

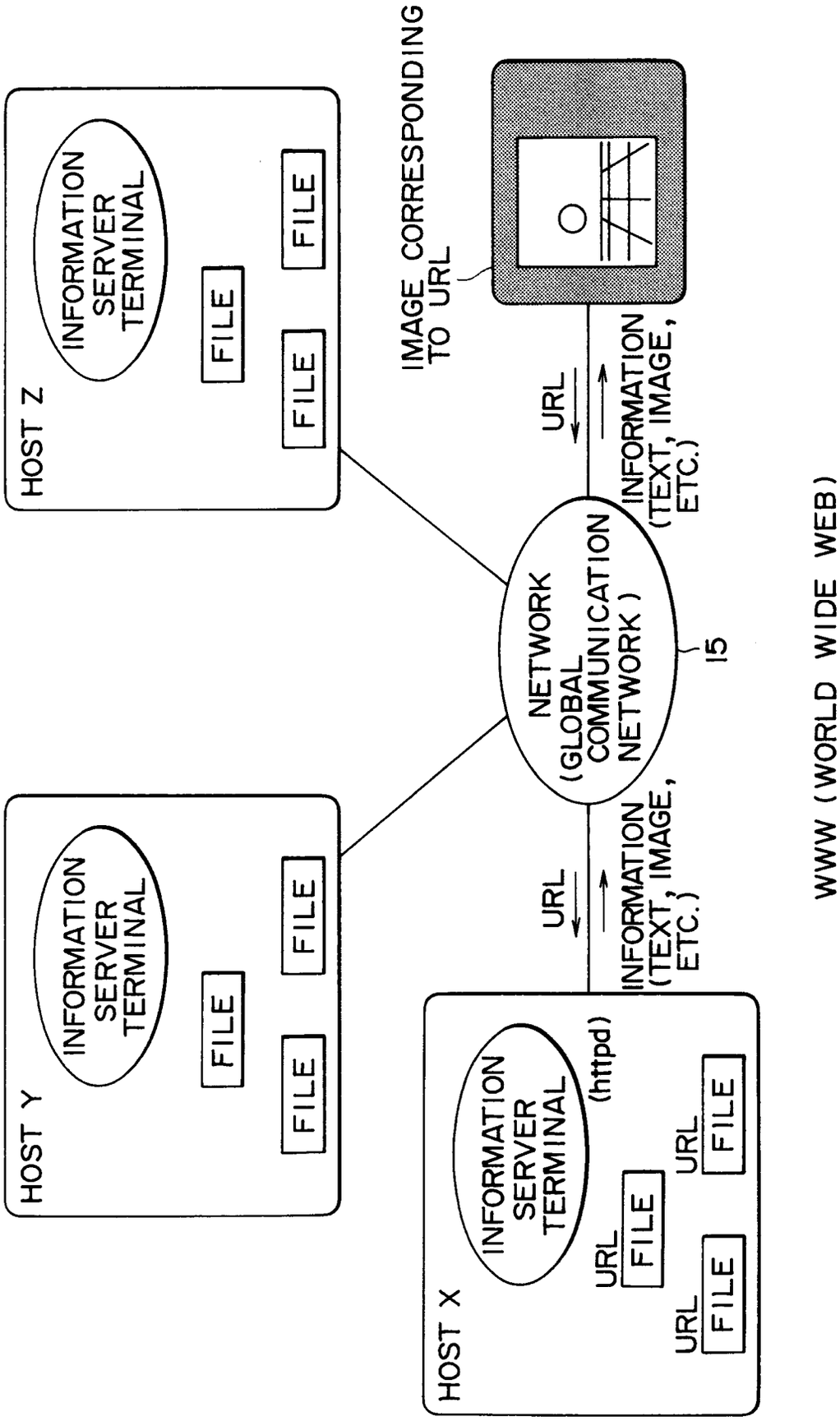
HOST Z
INFORMATION SERVER TERMINAL
FILE
FILE
FILE
HOST Y
INFORMATION SERVER TERMINAL
FILE
FILE
FILE
IMAGE CORRESPONDING TO URL
URL
INFORMATION (TEXT, IMAGE, ETC.)
NETWORK (GLOBAL COMMUNICATION NETWORK)
15
URL
INFORMATION (TEXT, IMAGE, ETC.)
HOST X
INFORMATION SERVER TERMINAL
(httpd)
URL
FILE
URL
FILE
URL
FILE
WWW (WORLD WIDE WEB)

FIG. 3

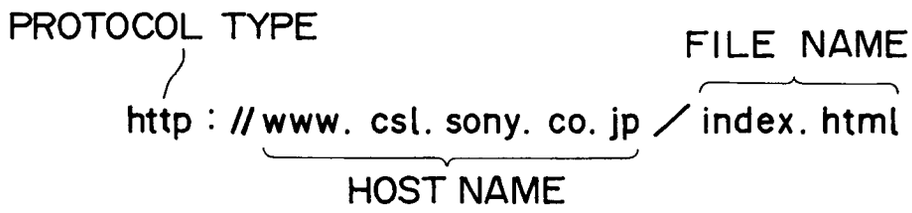
PROTOCOL TYPE
FILE NAME
http : //www. csl. sony. co. jp / index. html
HOST NAME

FIG. 4

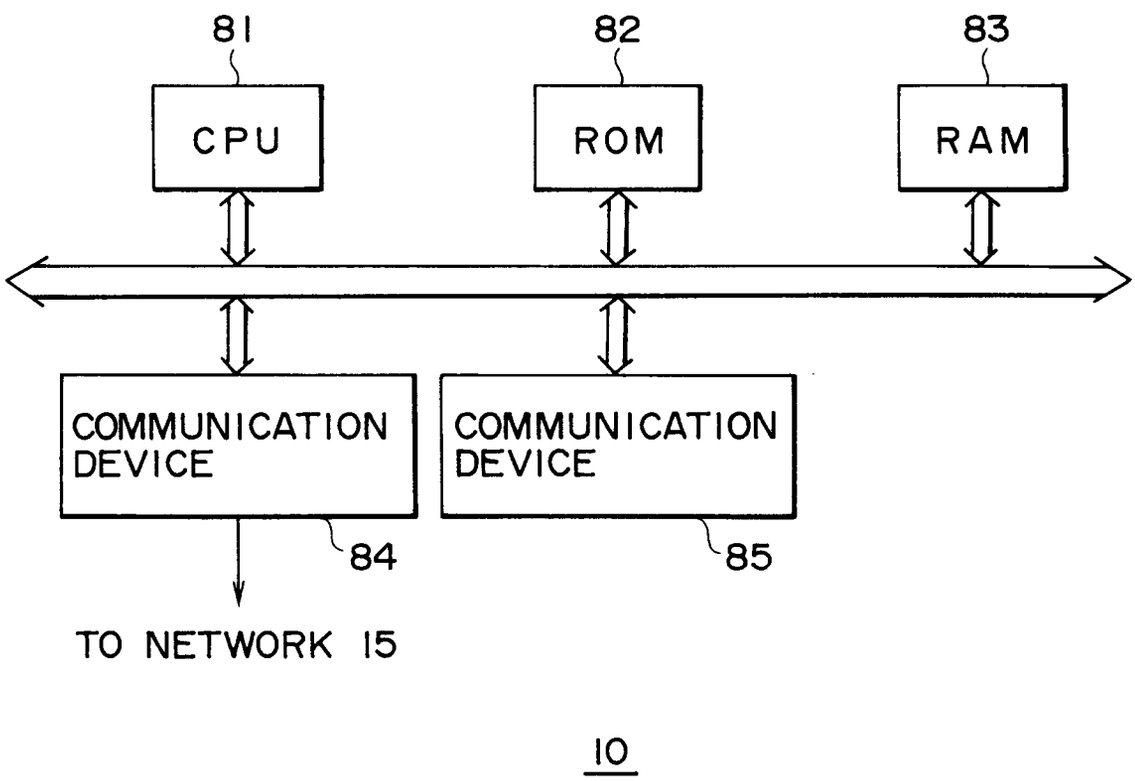
81
82
83
CPU
ROM
RAM
COMMUNICATION DEVICE
COMMUNICATION DEVICE
84
85
TO NETWORK 15
10

FIG. 5

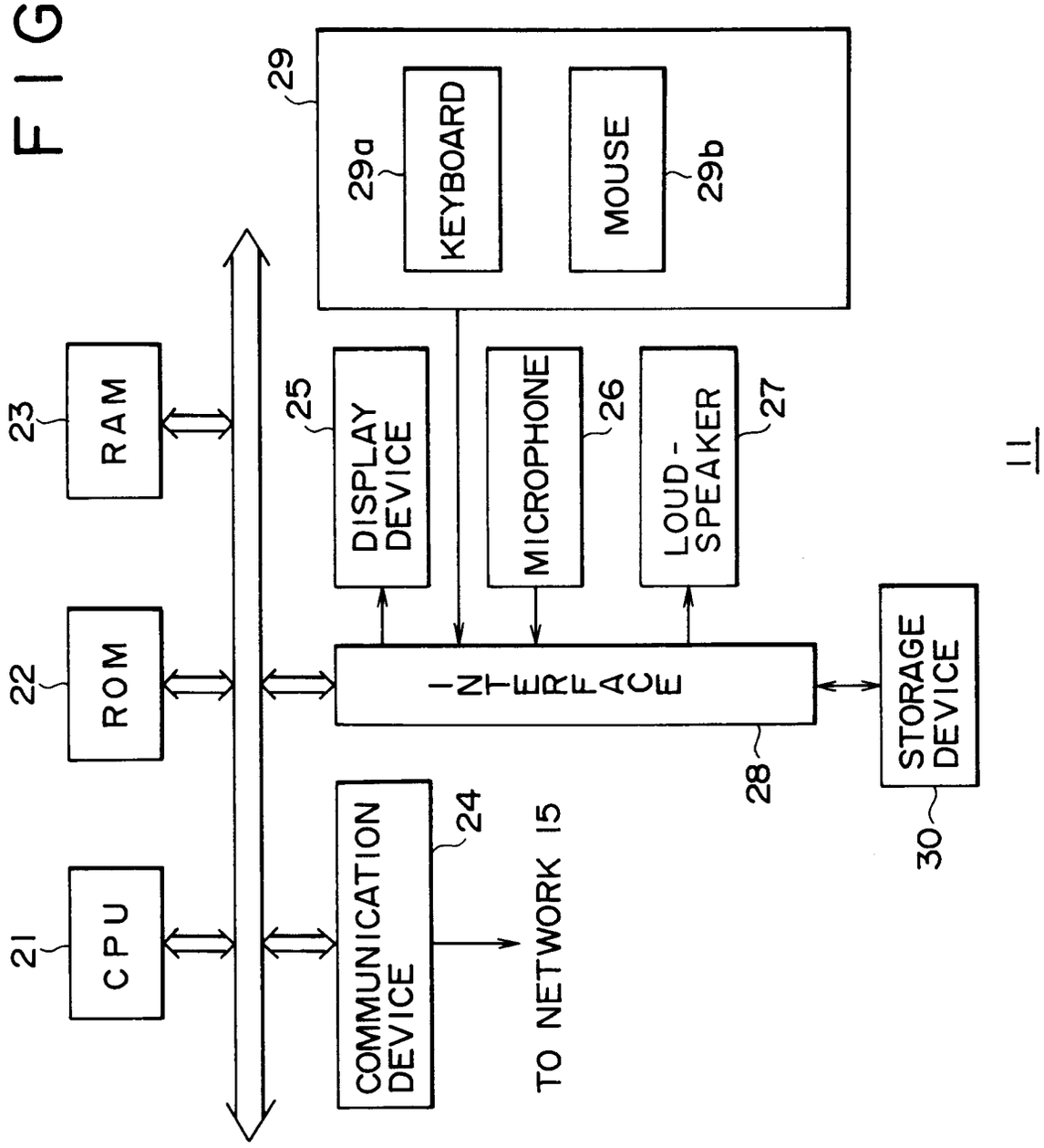
29
29a
KEYBOARD
MOUSE
29b
23
RAM
25
DISPLAY DEVICE
MICROPHONE
26
LOUD-SPEAKER
27
11
22
ROM
INTERFACE
28
STORAGE DEVICE
30
21
CPU
COMMUNICATION DEVICE
24
TO NETWORK 15

FIG. 6

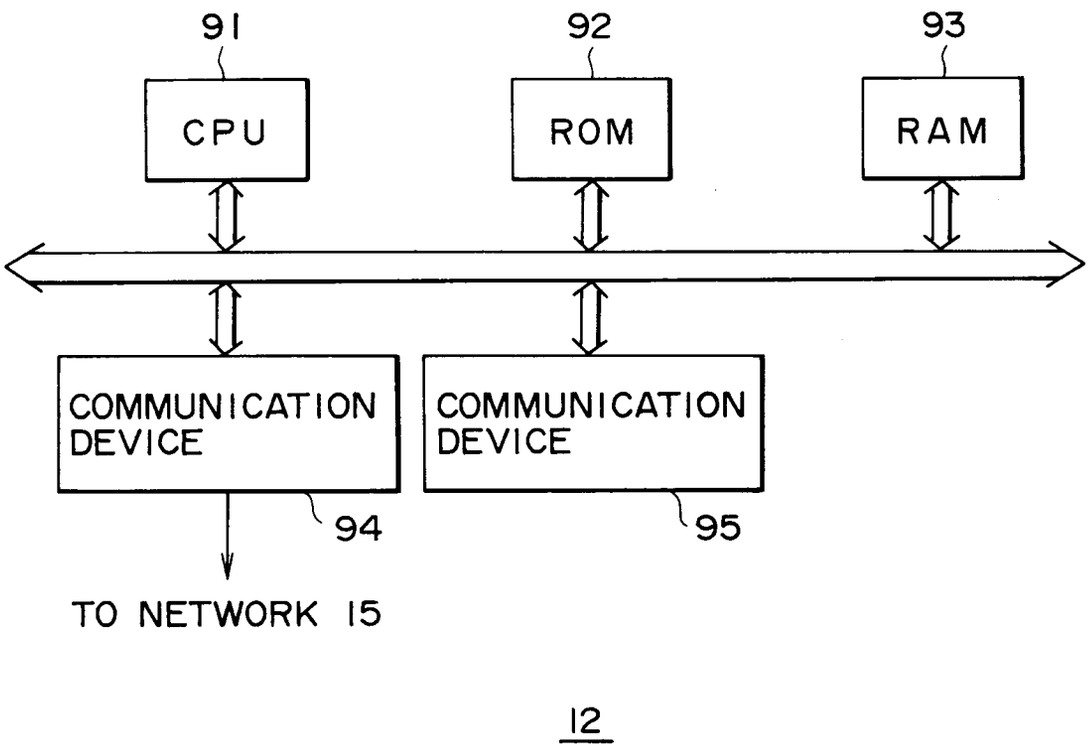
91
92
93
CPU
ROM
RAM
COMMUNICATION DEVICE
COMMUNICATION DEVICE
94
95
TO NETWORK 15
12

FIG. 7

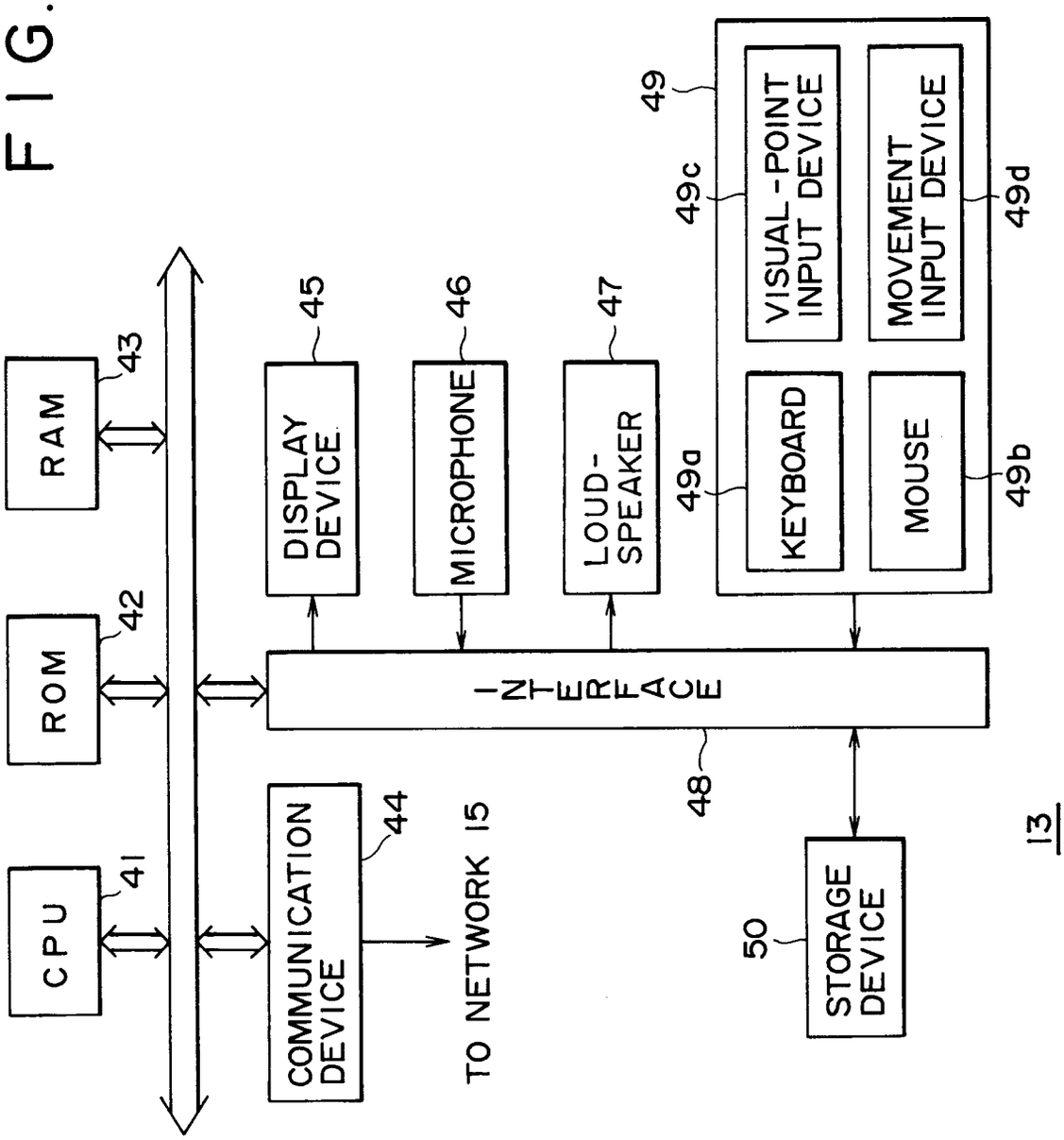
CPU
41
ROM
42
RAM
43
COMMUNICATION DEVICE
44
TO NETWORK 15
DISPLAY DEVICE
45
MICROPHONE
46
LOUD-SPEAKER
47
INTERFACE
48
49
49a
KEYBOARD
49b
MOUSE
49c
VISUAL-POINT INPUT DEVICE
49d
MOVEMENT INPUT DEVICE
50
STORAGE DEVICE
13

FIG. 8

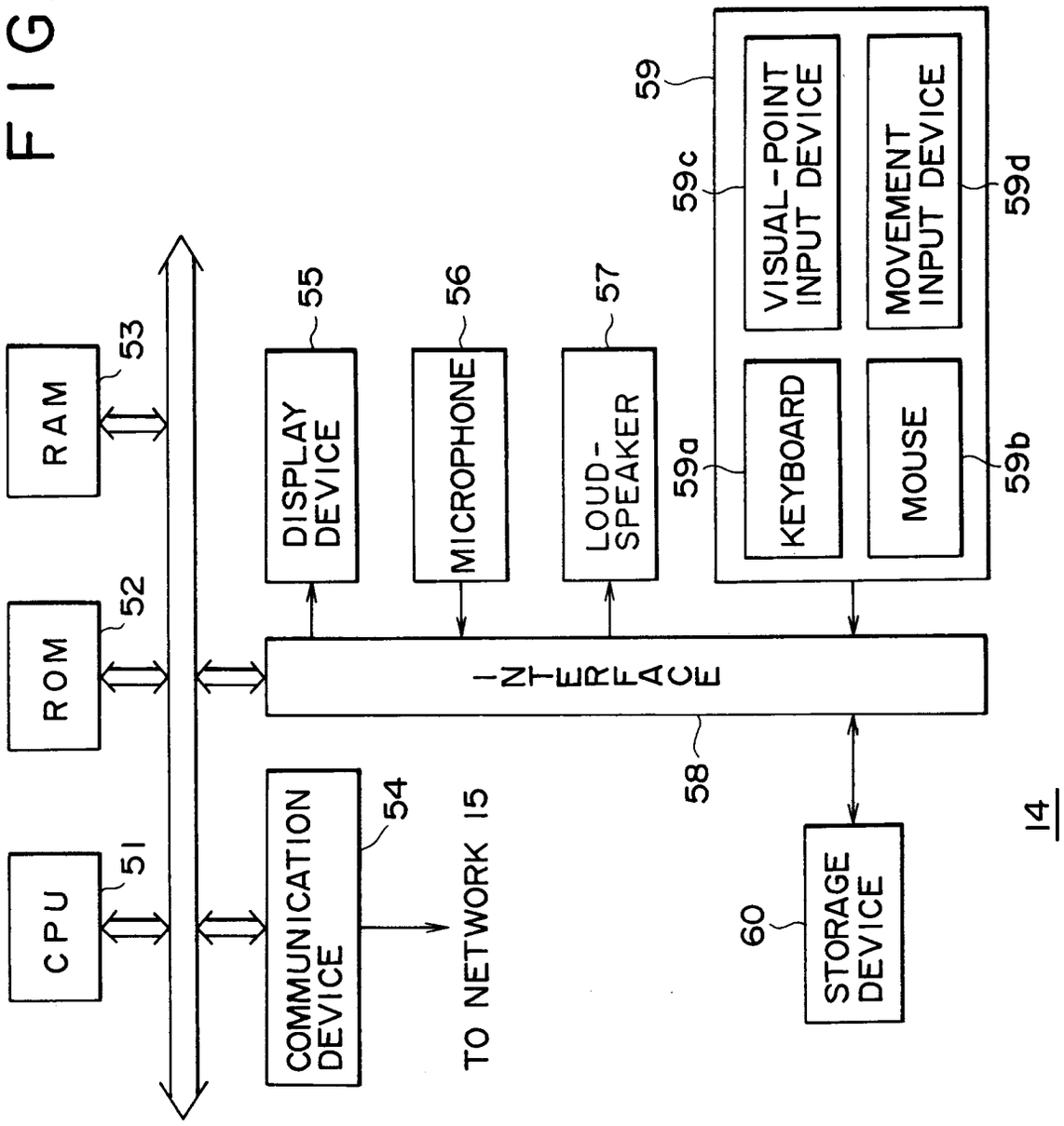
CPU
51
ROM
52
RAM
53
COMMUNICATION DEVICE
54
TO NETWORK 15
DISPLAY DEVICE
55
MICROPHONE
56
LOUD-SPEAKER
57
INTERFACE
58
59
59a
KEYBOARD
59b
MOUSE
59c
VISUAL-POINT INPUT DEVICE
59d
MOVEMENT INPUT DEVICE
60
STORAGE DEVICE
14

FIG. 9

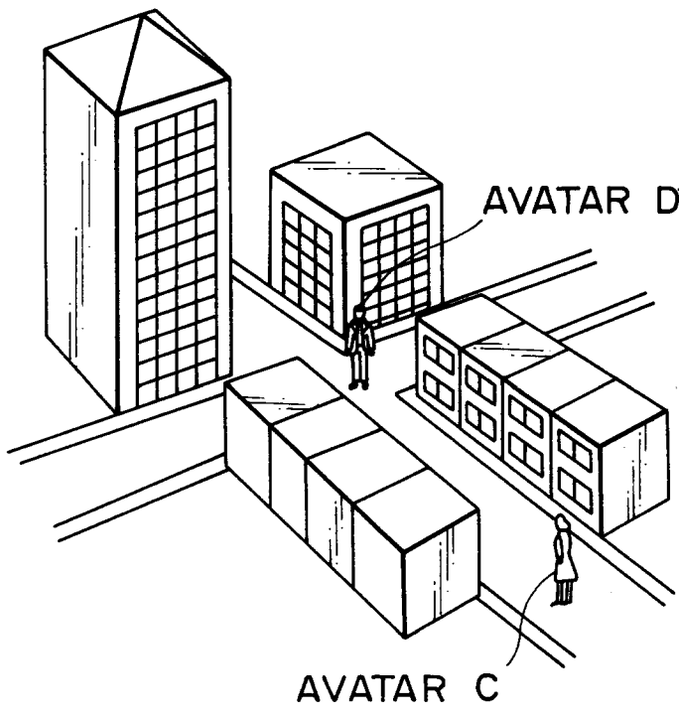

VIRTUAL WORLD MODEL

FIG. 10

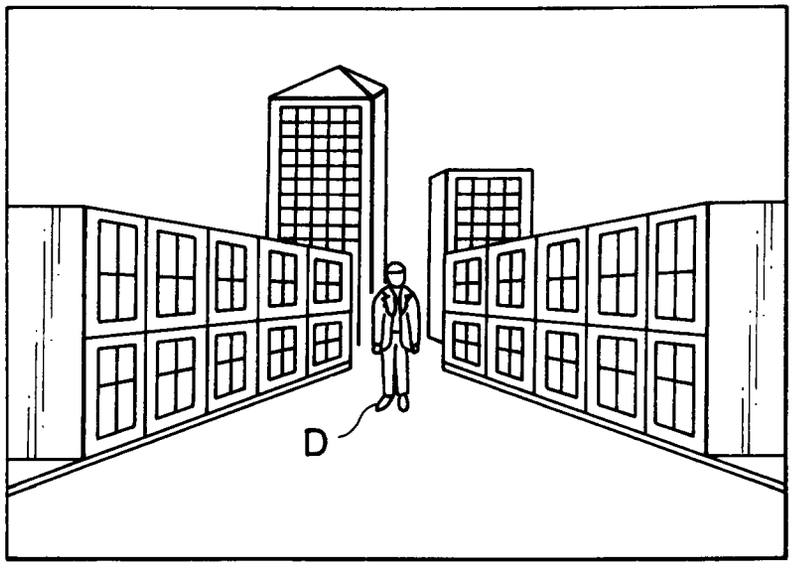

VIEWPOINT FROM AVATAR C

FIG. 11

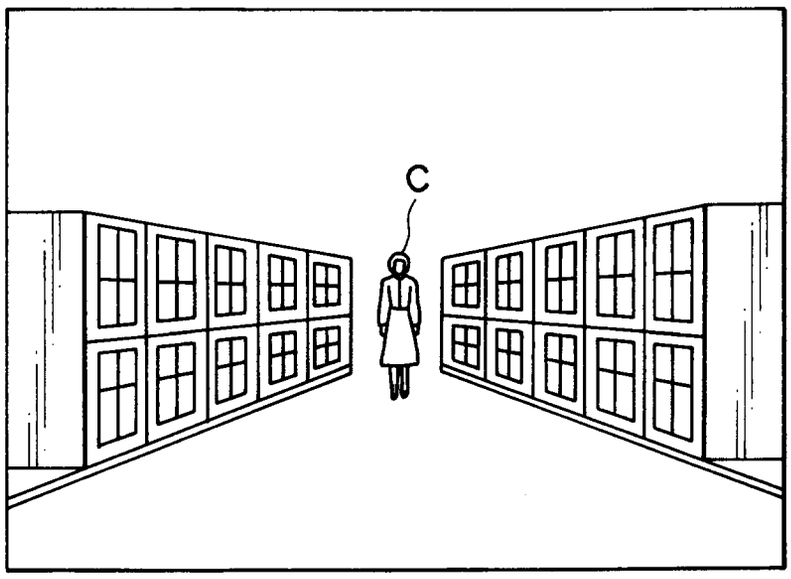

VIEWPOINT FROM AVATAR D

FIG. 12

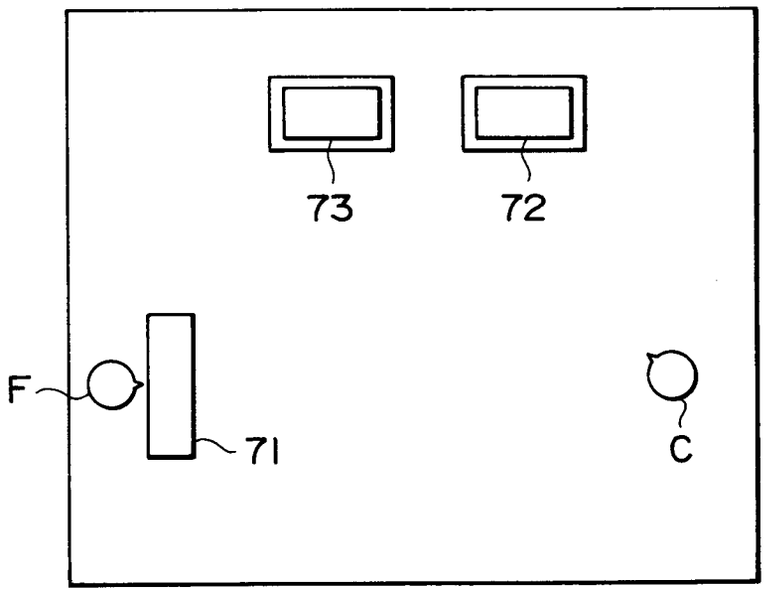

FIG. 13

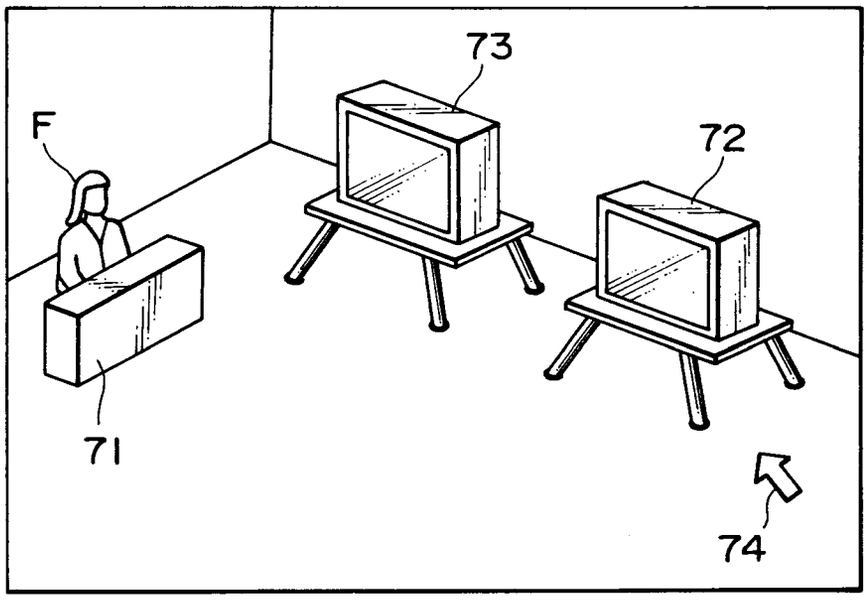

IMAGE VIEWED FROM CLIENT

FIG. 14

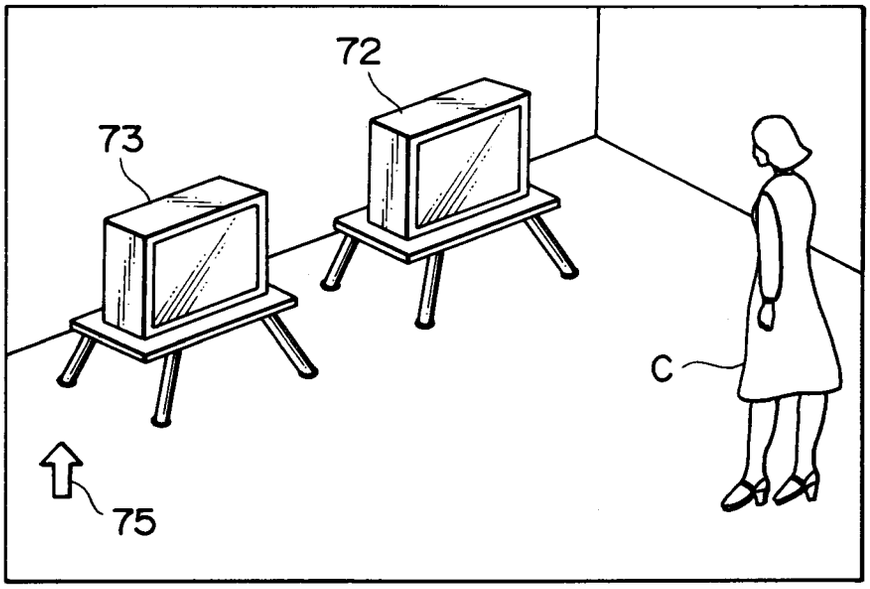

IMAGE VIEWED FROM COUNTER

FIG. 15

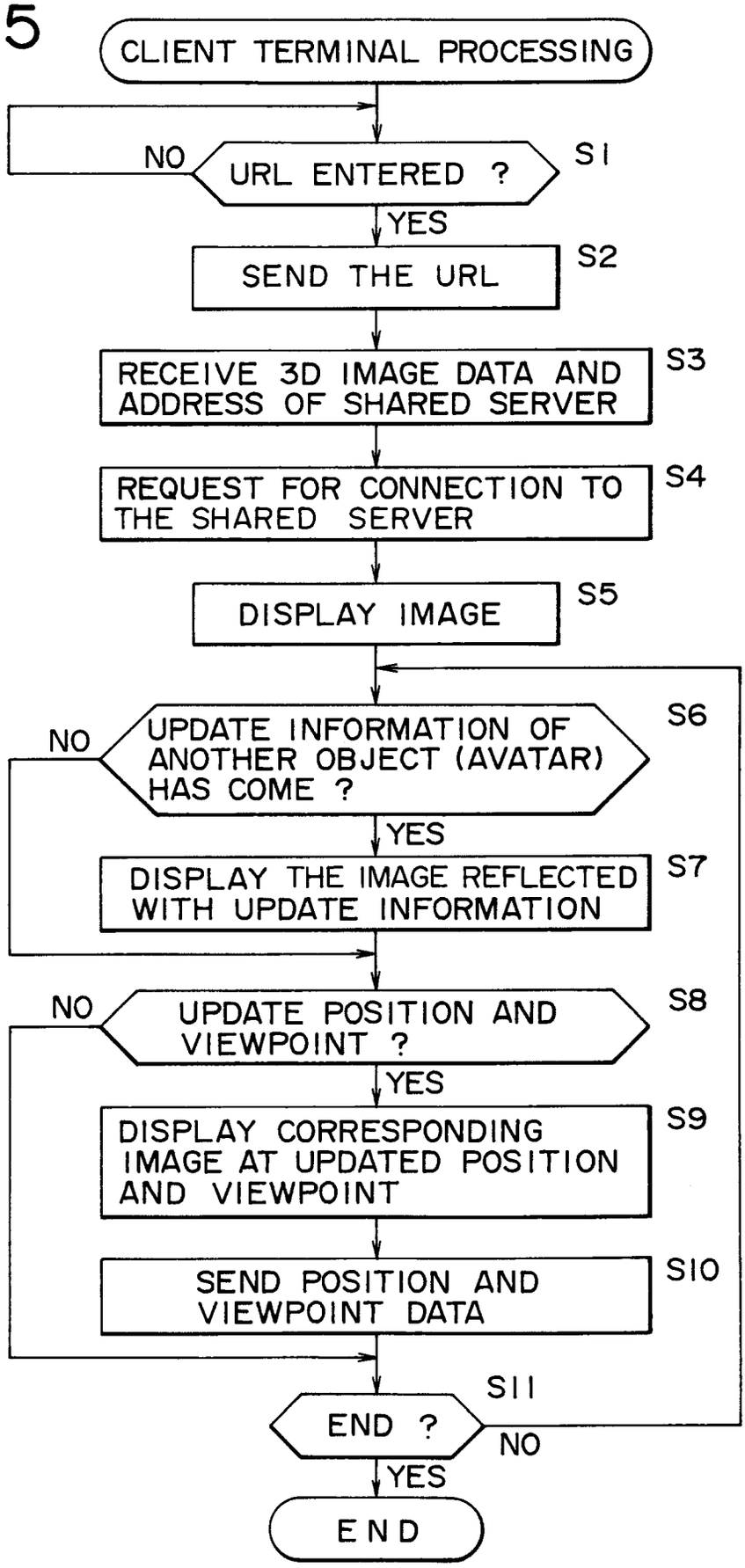
CLIENT TERMINAL PROCESSING
NO
URL ENTERED ?
S1
YES
SEND THE URL
S2
RECEIVE 3D IMAGE DATA AND ADDRESS OF SHARED SERVER
S3
REQUEST FOR CONNECTION TO THE SHARED SERVER
S4
DISPLAY IMAGE
S5
NO
UPDATE INFORMATION OF ANOTHER OBJECT (AVATAR) HAS COME ?
S6
YES
DISPLAY THE IMAGE REFLECTED WITH UPDATE INFORMATION
S7
NO
UPDATE POSITION AND VIEWPOINT ?
S8
YES
DISPLAY CORRESPONDING IMAGE AT UPDATED POSITION AND VIEWPOINT
S9
SEND POSITION AND VIEWPOINT DATA
S10
S11
END ?
NO
YES
END

FIG. 16

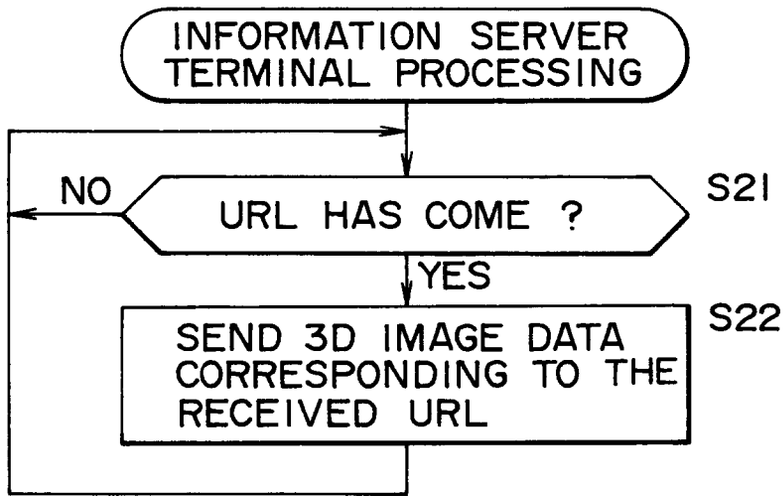
INFORMATION SERVER TERMINAL PROCESSING
NO
URL HAS COME ?
S21
YES
SEND 3D IMAGE DATA CORRESPONDING TO THE RECEIVED URL
S22

FIG. 17

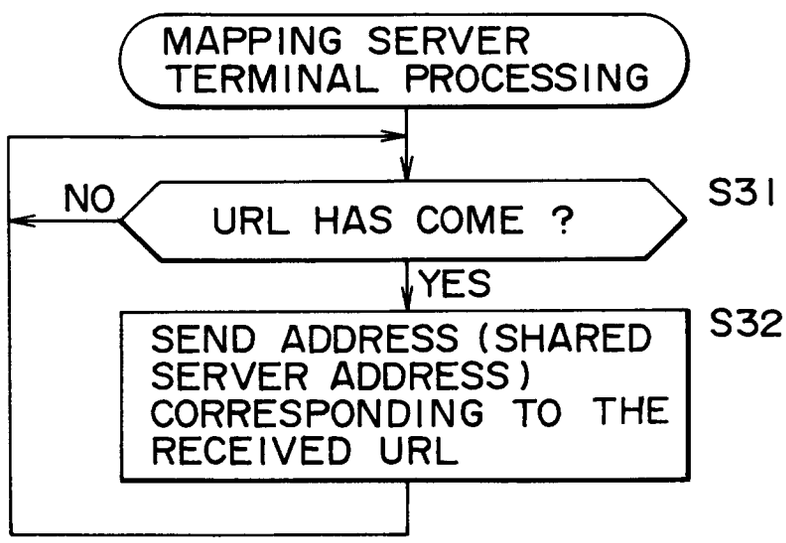
MAPPING SERVER TERMINAL PROCESSING
NO
URL HAS COME ?
S31
YES
SEND ADDRESS (SHARED SERVER ADDRESS) CORRESPONDING TO THE RECEIVED URL
S32

FIG. 18

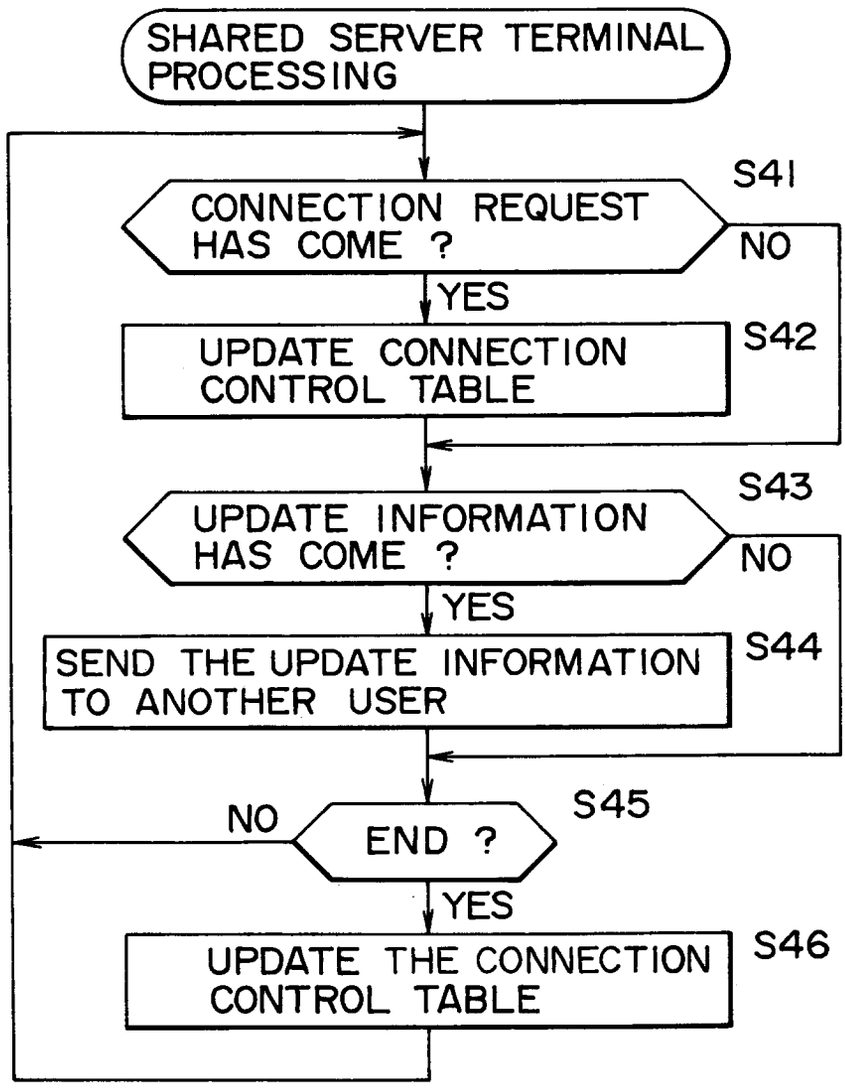
SHARED SERVER TERMINAL PROCESSING
S41
CONNECTION REQUEST HAS COME ?
NO
YES
S42
UPDATE CONNECTION CONTROL TABLE
S43
UPDATE INFORMATION HAS COME ?
NO
YES
S44
SEND THE UPDATE INFORMATION TO ANOTHER USER
S45
NO
END ?
YES
S46
UPDATE THE CONNECTION CONTROL TABLE

FIG. 19

COMMUNICATION PROTOCOL FOR THE CASE IN WHICH SHARED SPACE SERVER IS CONSTRUCTED ON WWW

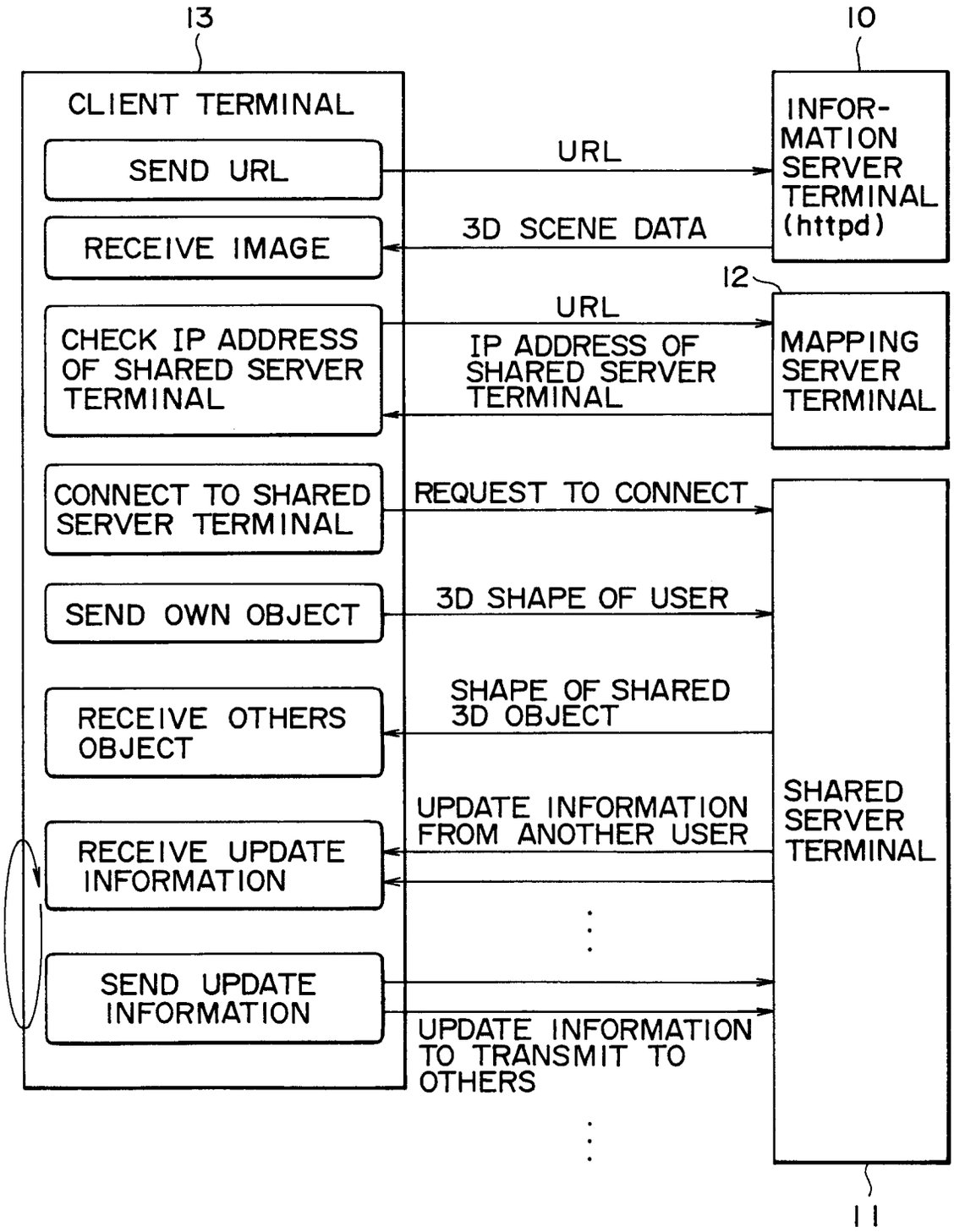

FIG. 20

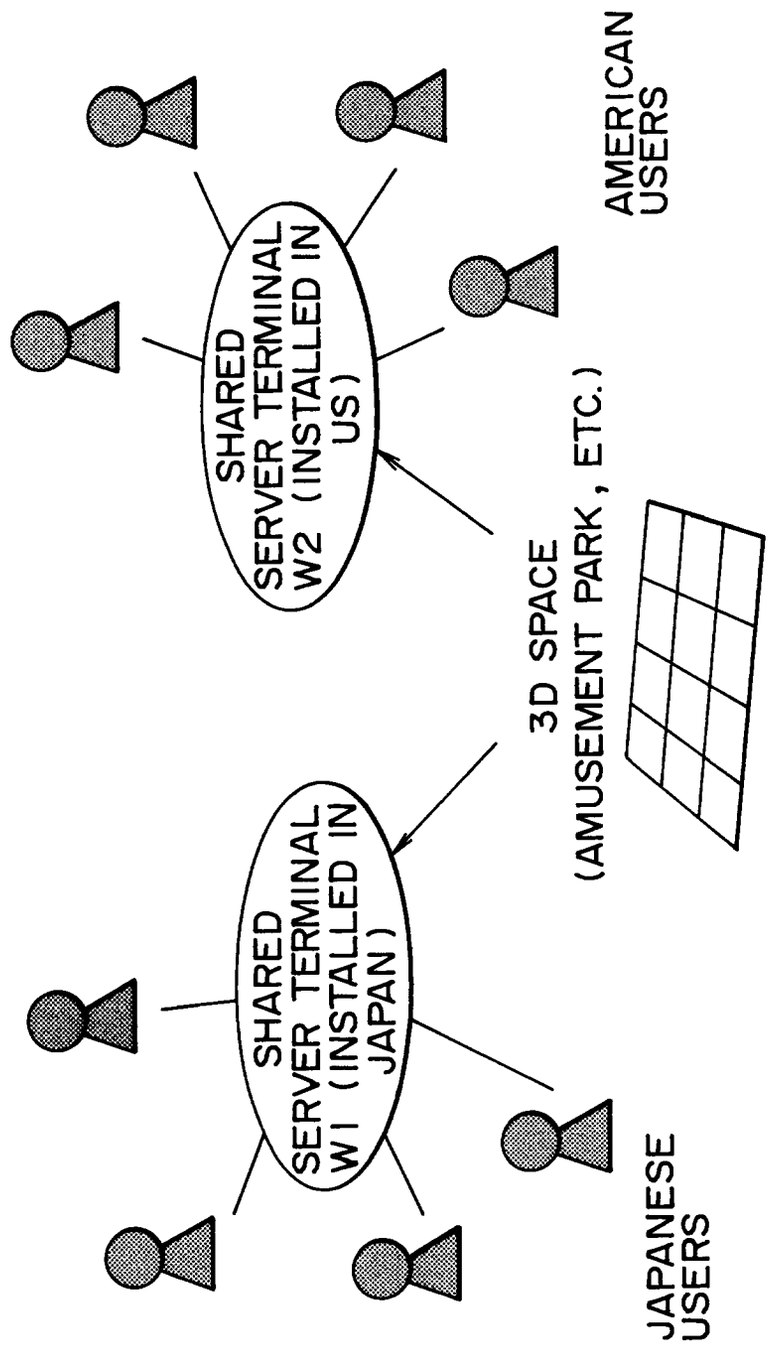
SHARED SERVER TERMINAL W2 (INSTALLED IN US)
AMERICAN USERS
3D SPACE (AMUSEMENT PARK, ETC.)
SHARED SERVER TERMINAL W1 (INSTALLED IN JAPAN)
JAPANESE USERS

FIG. 21

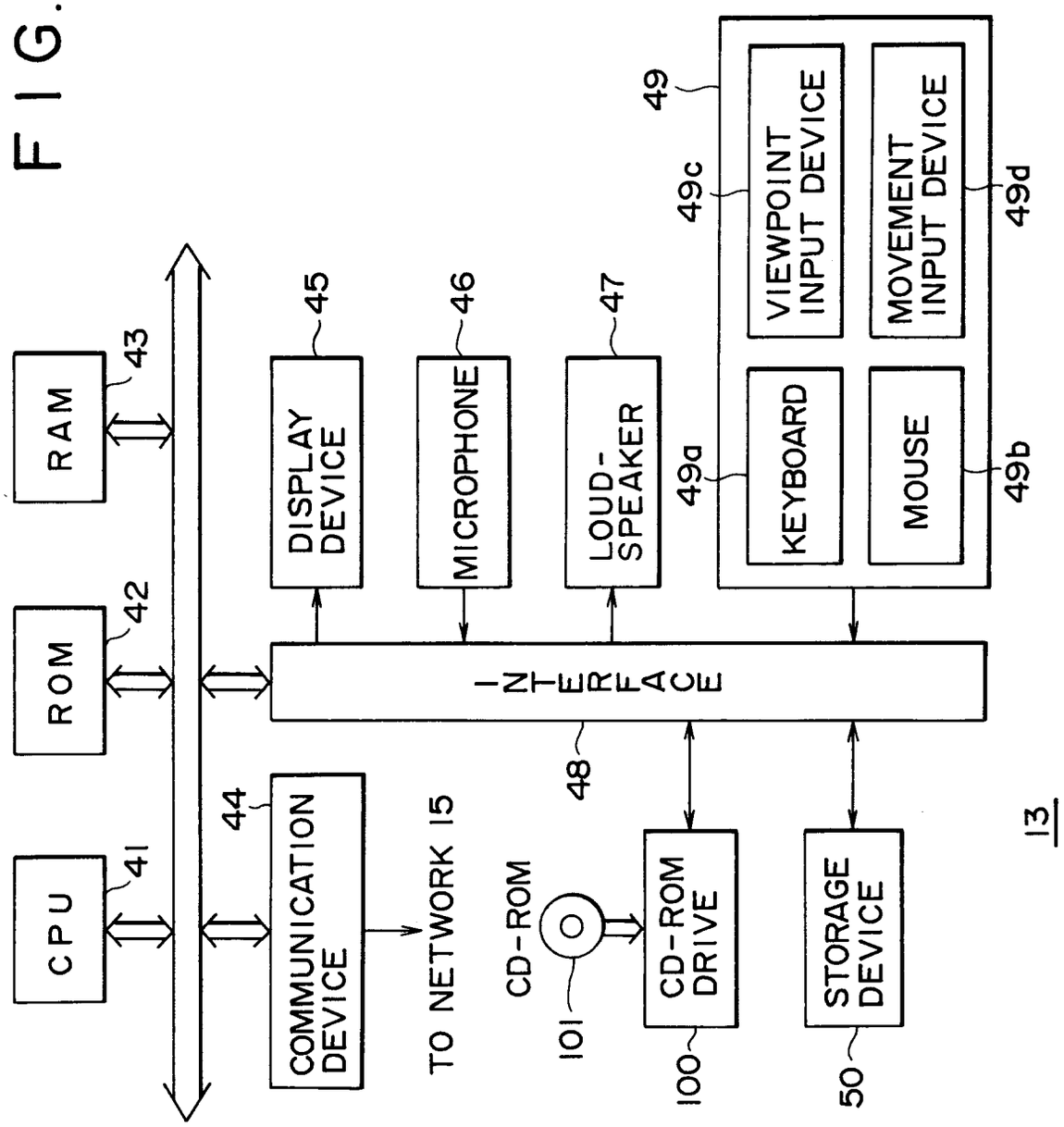
CPU
41
ROM
42
RAM
43
COMMUNICATION DEVICE
44
TO NETWORK 15
DISPLAY DEVICE
45
MICROPHONE
46
LOUD-SPEAKER
47
INTERFACE
48
CD-ROM
101
CD-ROM DRIVE
100
STORAGE DEVICE
50
49
49a
KEYBOARD
49b
MOUSE
49c
VIEWPOINT INPUT DEVICE
49d
MOVEMENT INPUT DEVICE
13

FIG. 22

CASE	BASIC OBJECT DATA STORED IN :	URL OF UPDATE OBJECT DATA STORED IN :	UPDATE OBJECT DATA STORED IN :
1	VRML FILE OF SPECIFIC DIRECTORY IN STORAGE DEVICE OF INFORMATION SERVER	DEFAULT URL	INFORMATION SERVER
2		MAPPING SERVER	SHARED SERVER IN JAPAN
3			SHARED SERVER IN US
4	VRML FILE OF SPECIFIC DIRECTORY IN STORAGE DEVICE OF CLIENT TERMINAL	MANUALLY SPECIFY URL	SPECIFIED SHARED SERVER
5		MAPPING SERVER	SHARED SERVER IN JAPAN
6			SHARED SERVER IN US
7	VRML FILE OF SPECIFIC DIRECTORY OF CD-ROM OF CLIENT TERMINAL	MANUALLY SPECIFY URL	SPECIFIED SHARED SERVER
8		MAPPING SERVER	SHARED SERVER IN JAPAN
9			SHARED SERVER IN US

FIG. 23

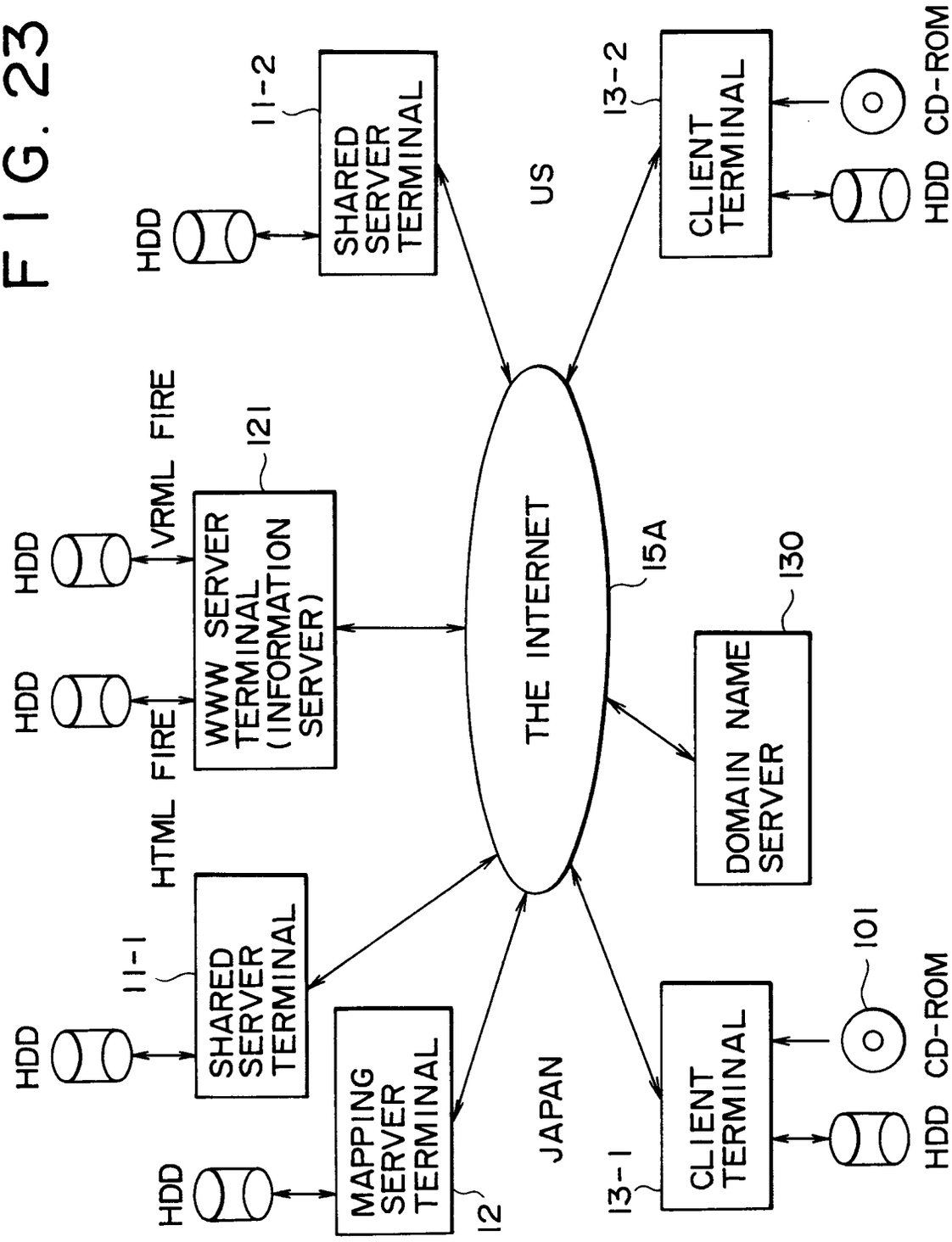
HDD
SHARED SERVER TERMINAL
11-1
HTML FIRE
HDD
HDD
VRML FIRE
WWW SERVER TERMINAL (INFORMATION SERVER)
121
HDD
MAPPING SERVER TERMINAL
12
JAPAN
THE INTERNET
15A
US
HDD
SHARED SERVER TERMINAL
11-2
DOMAIN NAME SERVER
130
HDD
CLIENT TERMINAL
13-1
101
HDD
CD-ROM
HDD
CLIENT TERMINAL
13-2
HDD
CD-ROM

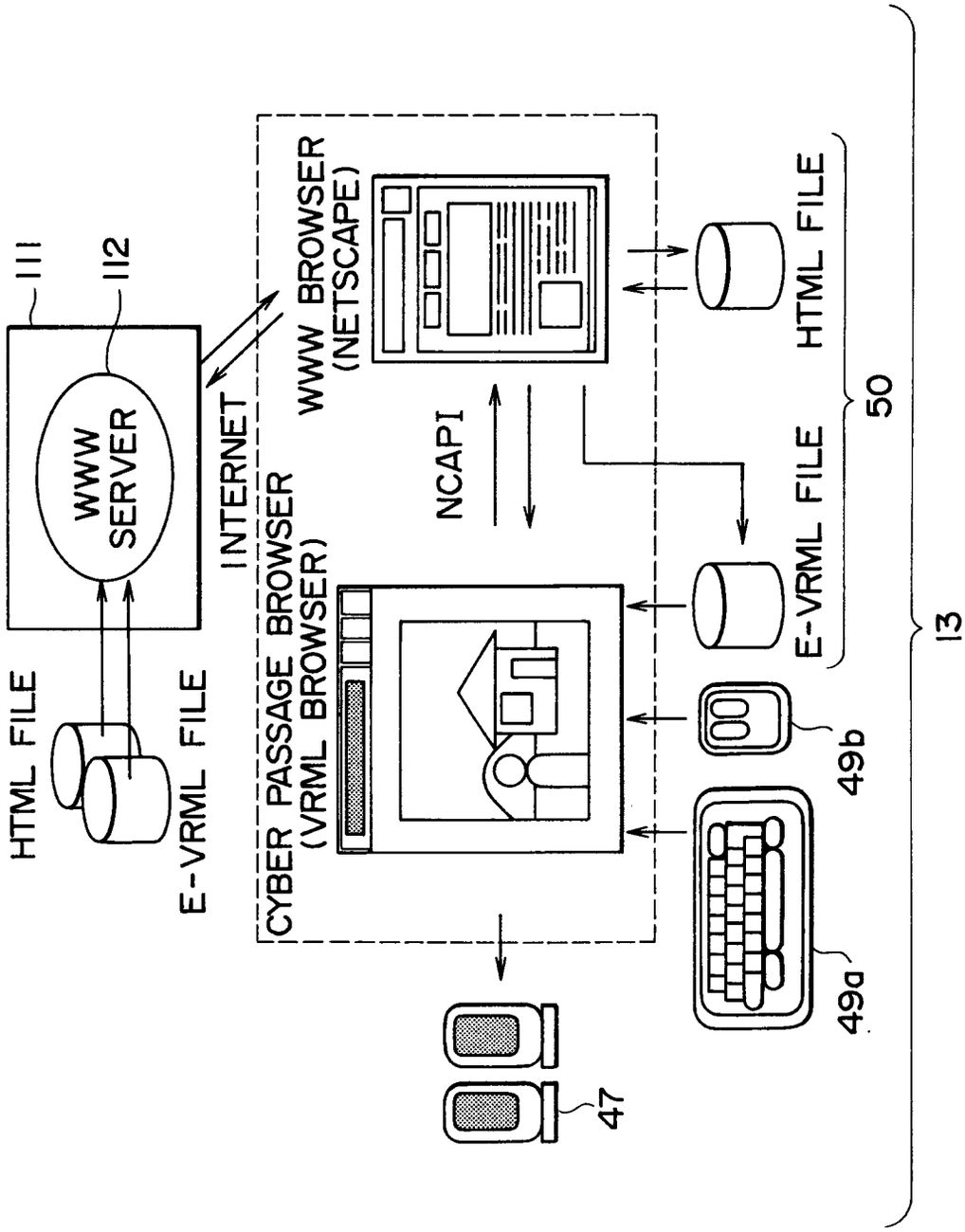
111
112
WWW SERVER
HTML FILE
E-VRML FILE
INTERNET
CYBER PASSAGE BROWSER (VRML BROWSER)
WWW BROWSER (NETSCAPE)
NCAPI
HTML FILE
E-VRML FILE
50
13
49b
49a
47

FIG. 24

FIG. 25

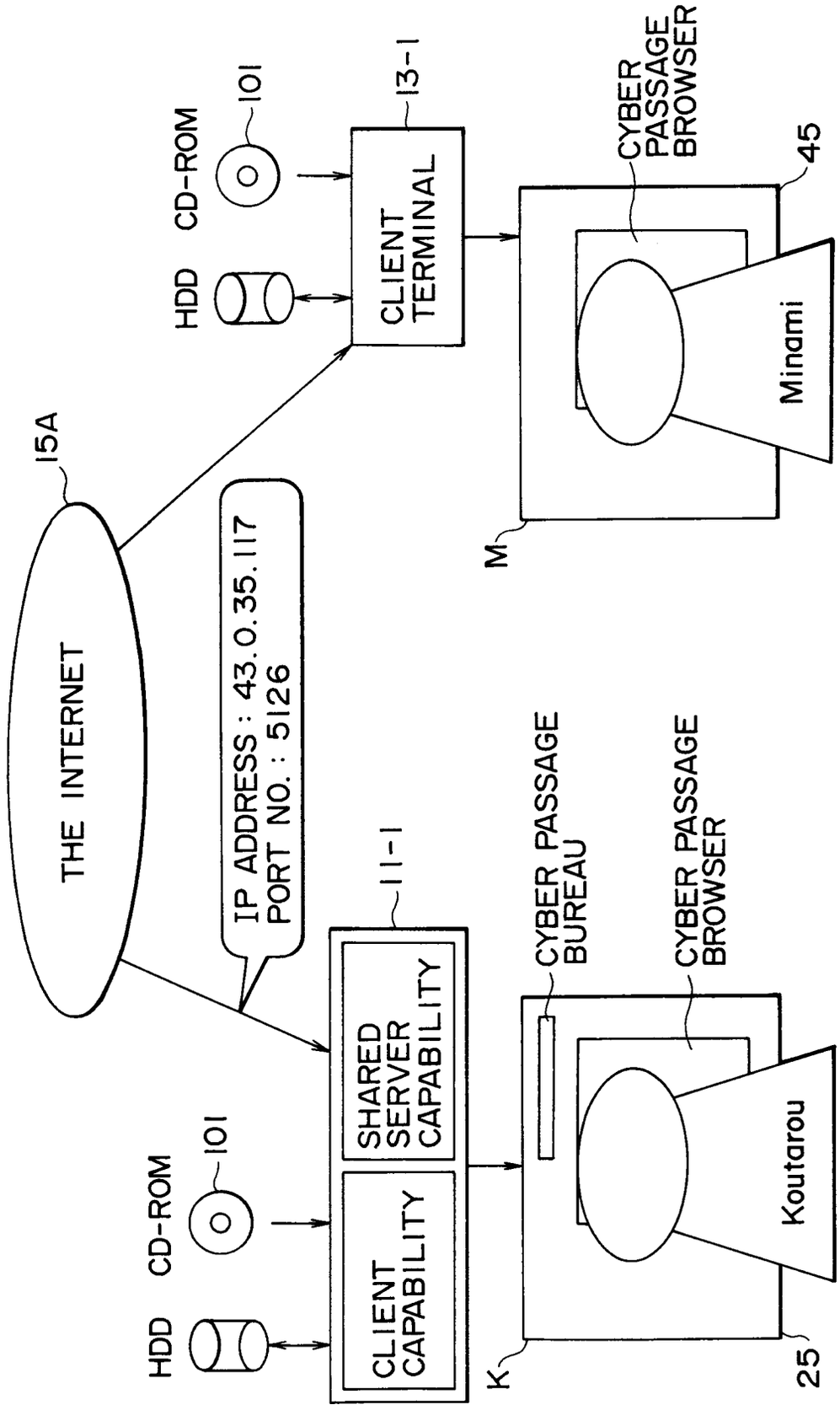
THE INTERNET
15A
IP ADDRESS : 43.0.35.117
PORT NO. : 5126
HDD
CD-ROM
101
CLIENT TERMINAL
13-1
CYBER PASSAGE BROWSER
45
Minami
M
HDD
CD-ROM
101
CLIENT CAPABILITY
SHARED SERVER CAPABILITY
11-1
CYBER PASSAGE BUREAU
CYBER PASSAGE BROWSER
Koutarou
K
25

FIG. 26

	MINIMUM OPERATING ENVIRONMENT	RECOMMENDED OPERATING ENVIRONMENT
HARDWARE	PC ON WHICH WINDOWS 95/NT OPERATE	←
CPU	486D x 2, 66MHz	PENTIUM 75MHz OR HIGHER
MEMORY	12MB	32MB OR HIGHER
DISK FREE SPACE	3MB (9MB AT INSTALLATION) OR HIGHER	←
RESOLUTION	640 x 480 PIXELS	800 x 600 PIXELS OR HIGHER
DISPLAY COLORS	256 COLORS	65536 COLORS OR HIGHER
SOFTWARE	NETSCAPE NAVIGATOR FOR WINDOWS (VER 2.0 OR LATER)	←
SOUND		SOUND BOARD

FIG. 27

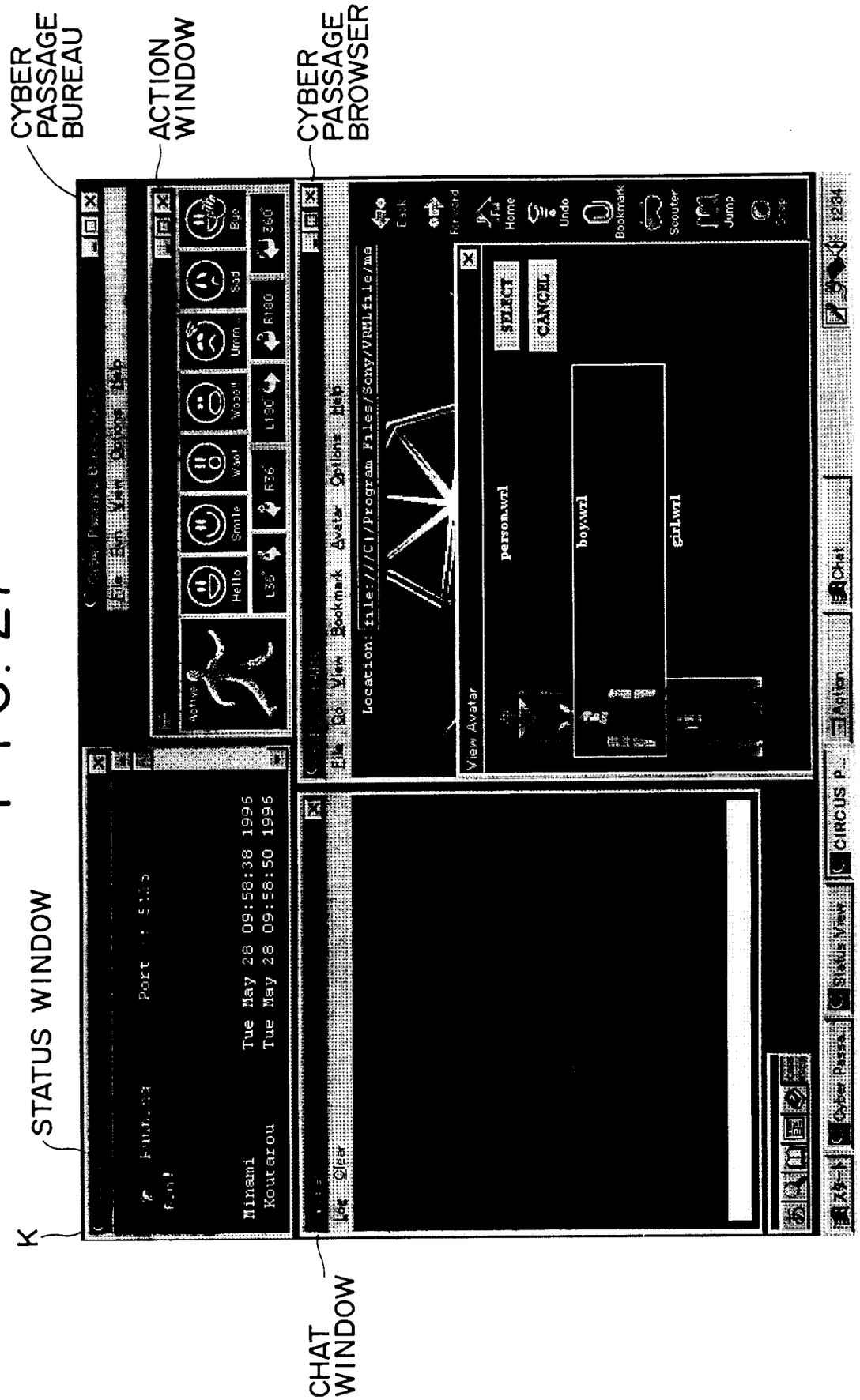
CYBER PASSAGE BUREAU
ACTION WINDOW
CYBER PASSAGE BROWSER
STATUS WINDOW
K
CHAT WINDOW
Minami
Koutarou
Tue May 28 09:58:38 1996
Tue May 28 09:58:50 1996
Location: file:///C|/Program Files/Sony/VRMLfile/ma
SELECT
CANCEL
person.wrl
boy.wrl
girl.wrl
View Avatar
Home
Undo
Bookmark
Scouter
Jump
Hello
Smile
Wool
Woool
Umm...
Sad
Bye
Active
Log
Clear
Status View
CIRCUS P...
Action
Chat
Cyber Passa...

FIG. 28

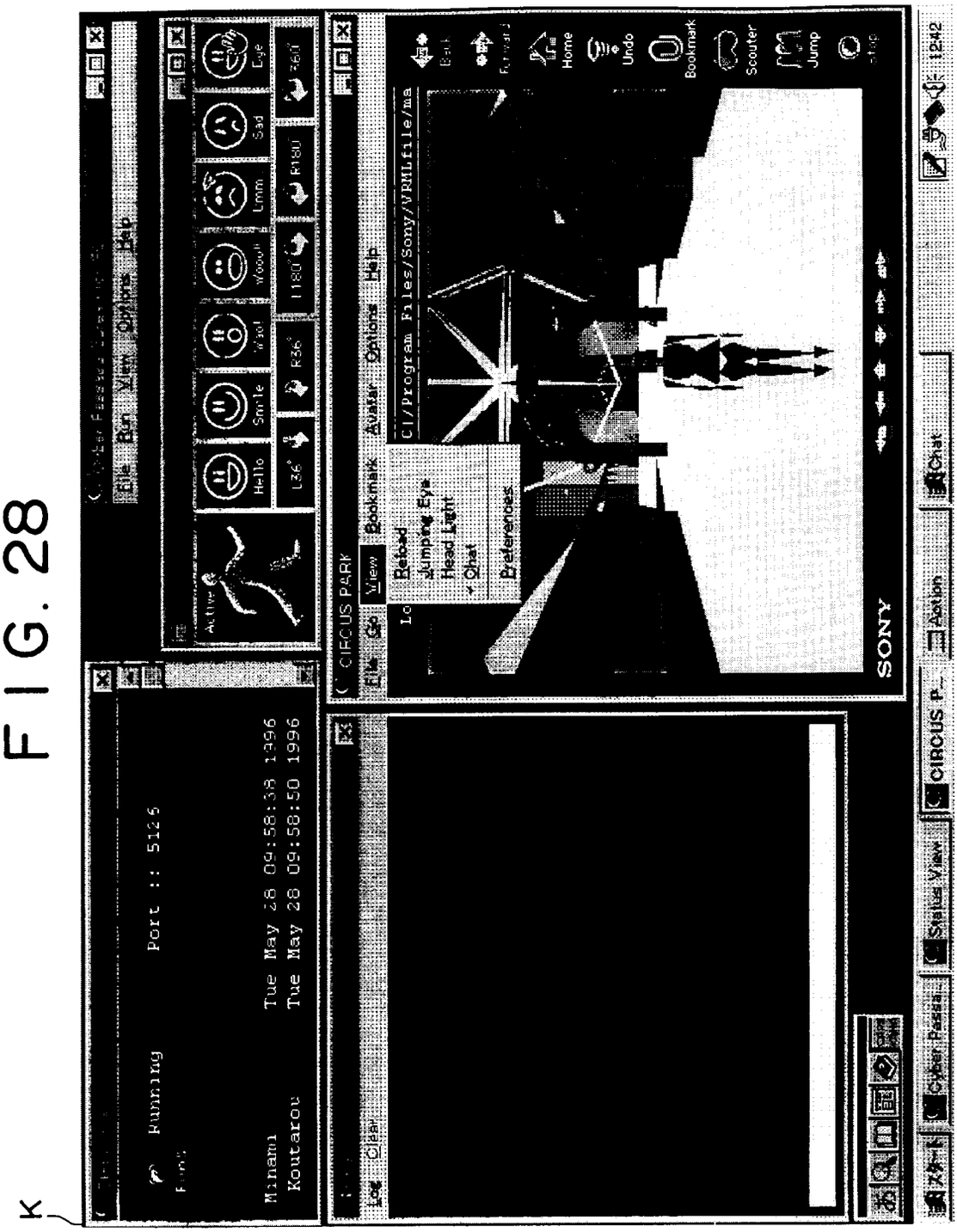
K
Running
Port :: 5125
Minami
Koutarou
Tue May 28 09:58:38 1996
Tue May 28 09:58:50 1996
CIRCUS PARK
Reload
Jumping Eye
Head Light
Chat
Preferences
Home
Undo
Bookmark
Scouter
Jump
SONY
Status View
Action
Chat
12:42

FIG. 29

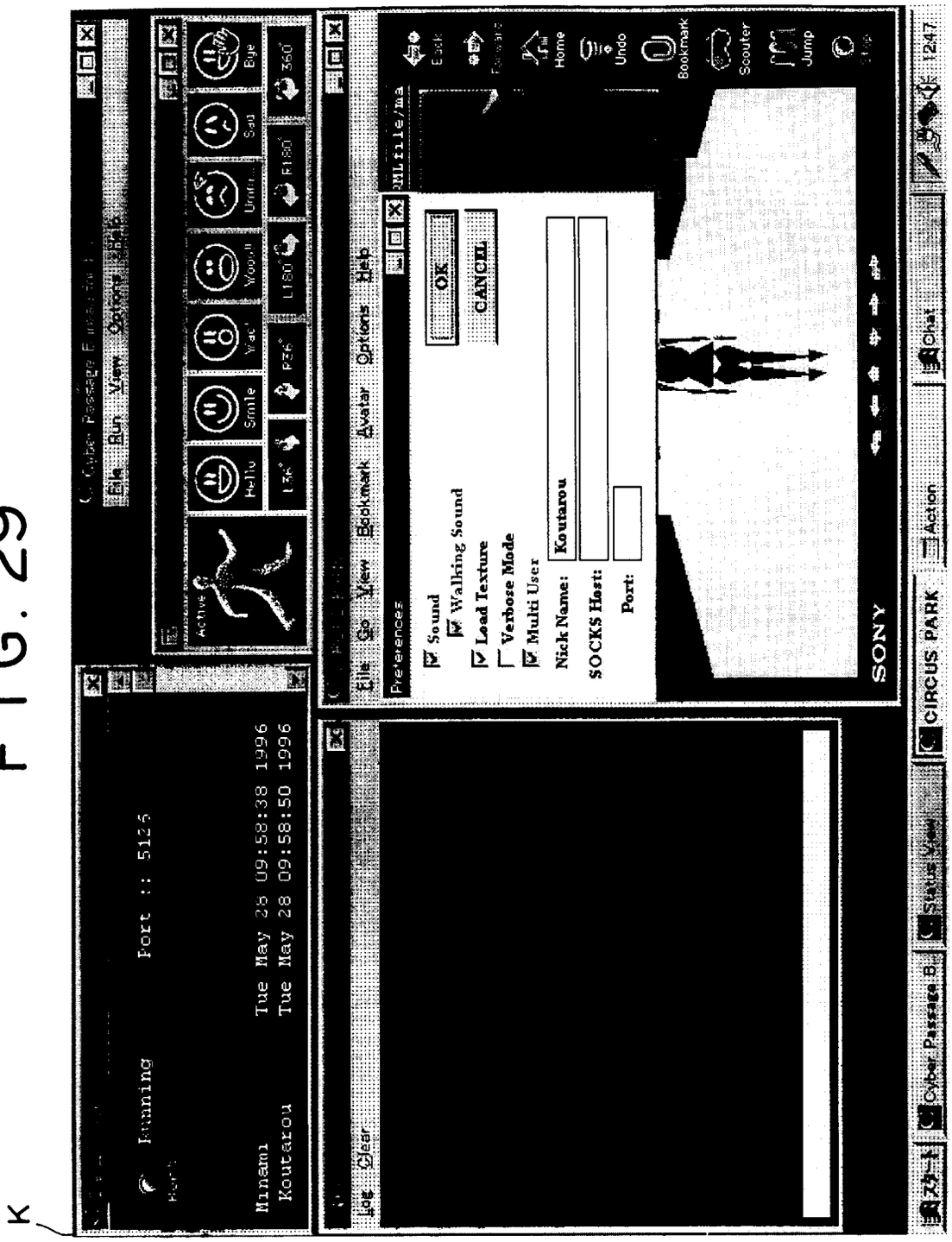
K
Running
Port :: 5125
Minami
Koutarou
Tue May 28 09:58:38 1996
Tue May 28 09:58:50 1996
Log
Clear
Active
Hello
Smile
Wac
Woo
Sad
Bye
Preferences
Sound
Walking Sound
Load Texture
Verbose Mode
Multi User
Nick Name:
Koutarou
SOCKS Host:
Port:
OK
CANCEL
SONY
Home
Undo
Bookmark
Scouter
Jump
CIRCUS PARK
Action
Chat
Status View
Cyber Passage B
12:47

FIG. 30

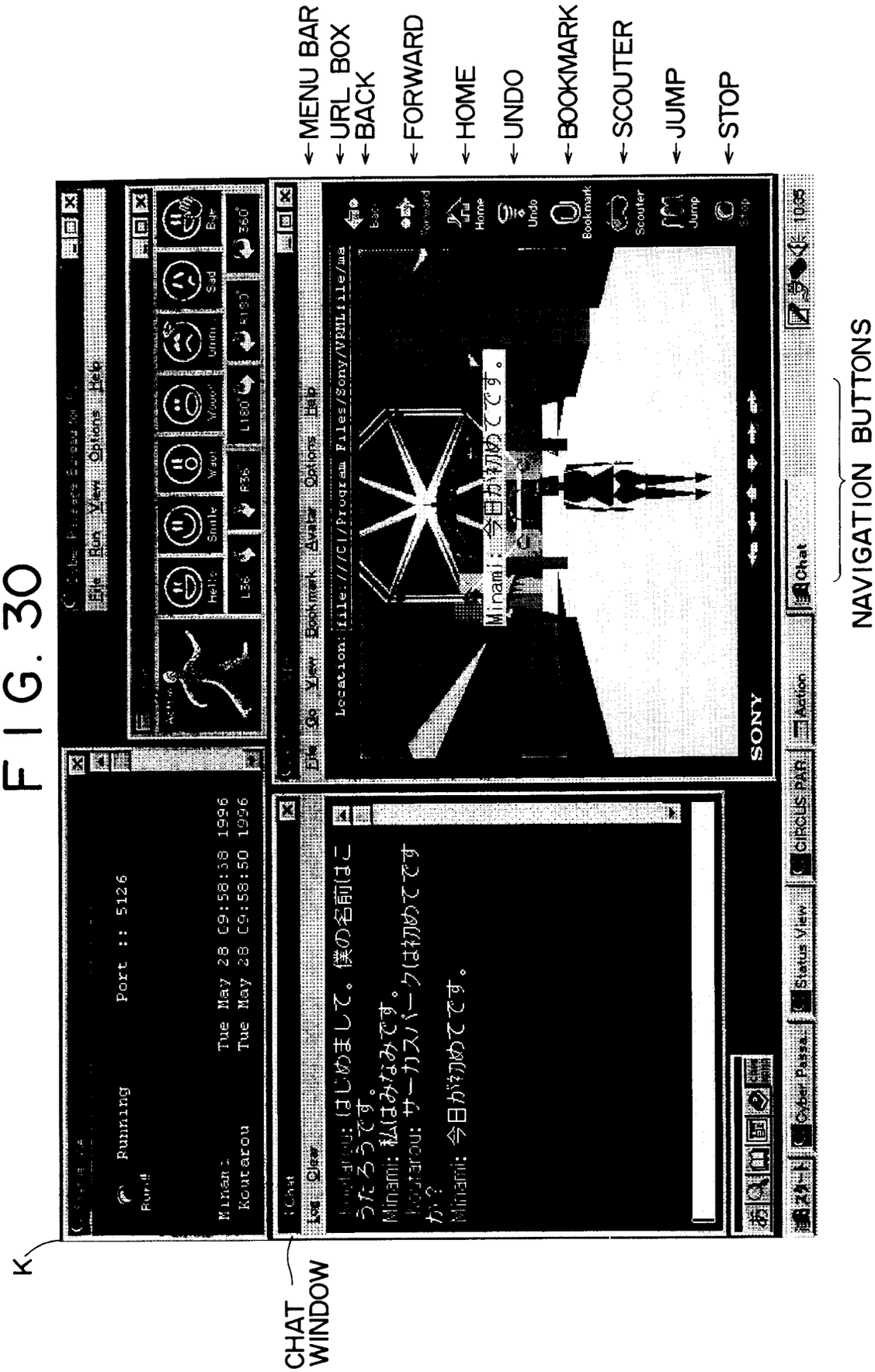
MENU BAR
URL BOX
BACK
FORWARD
HOME
UNDO
BOOKMARK
SCOUTER
JUMP
STOP
NAVIGATION BUTTONS
K
CHAT WINDOW
Running
Port :: 5126
Minami
Koutarou
Tue May 28 09:58:38 1996
Tue May 28 09:58:50 1996
Location: file:///C|/Program Files/Sony/VRMLfile/ma
Minami: 今日が初めてです。
SONY
Chat
Action
CIRCUS PAR
Status View
Cyber Passa

FIG. 31

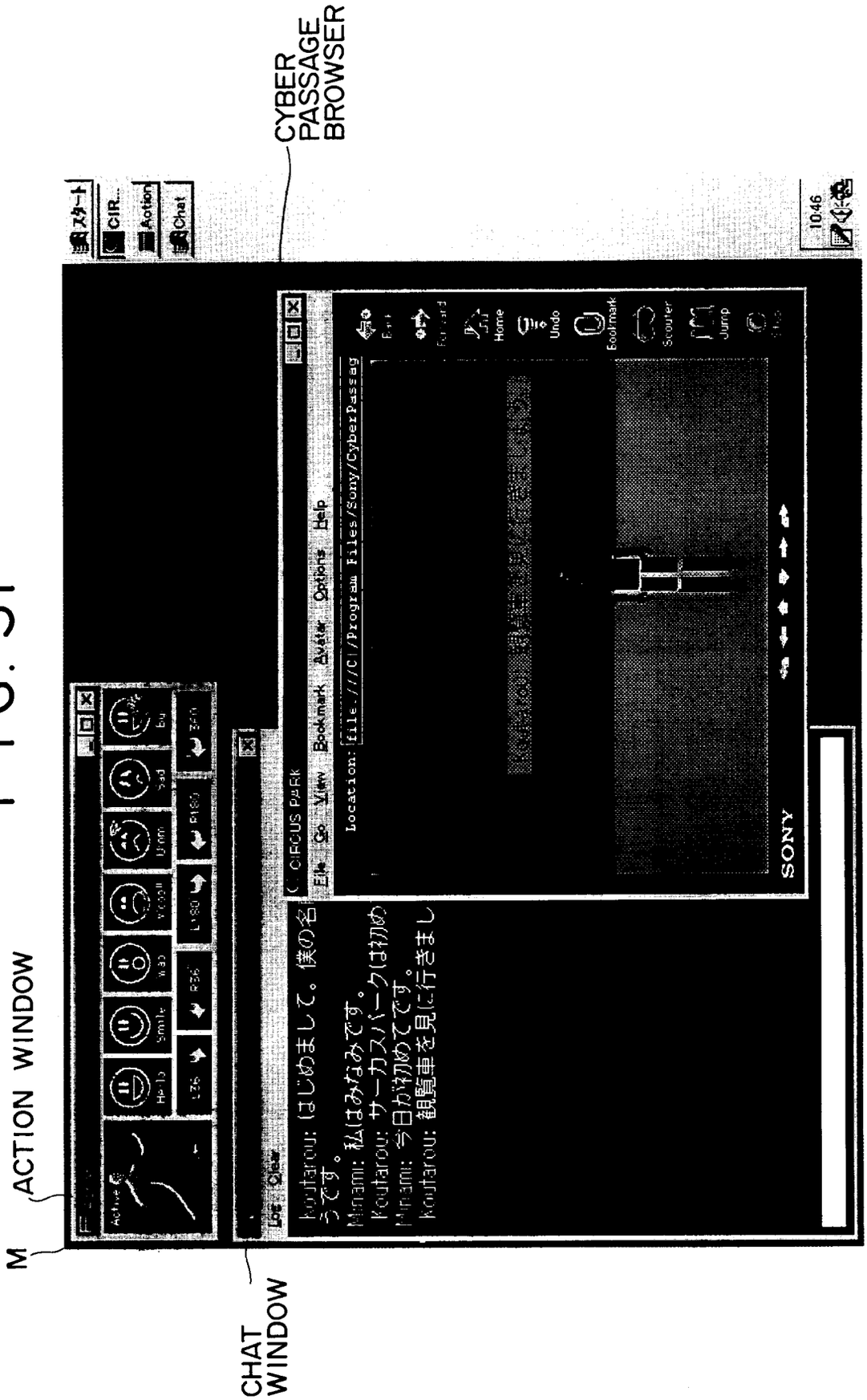
CYBER PASSAGE BROWSER
ACTION WINDOW
M
CHAT WINDOW
スタート
CIR...
Action
Chat
10:46
Circus Park
File Go View Bookmark Avatar Options Help
Location: file:///C|/Program Files/Sony/CyberPassag
Home
Undo
Bookmark
Scouter
Jump
SONY
Koutarou: はじめまして。僕の名
です。
Minami: 私はみなみです。
Koutarou: サーカスパークは初め
Minami: 今日が初めてです。
Koutarou: 観覧車を見に行きまし

FIG. 32

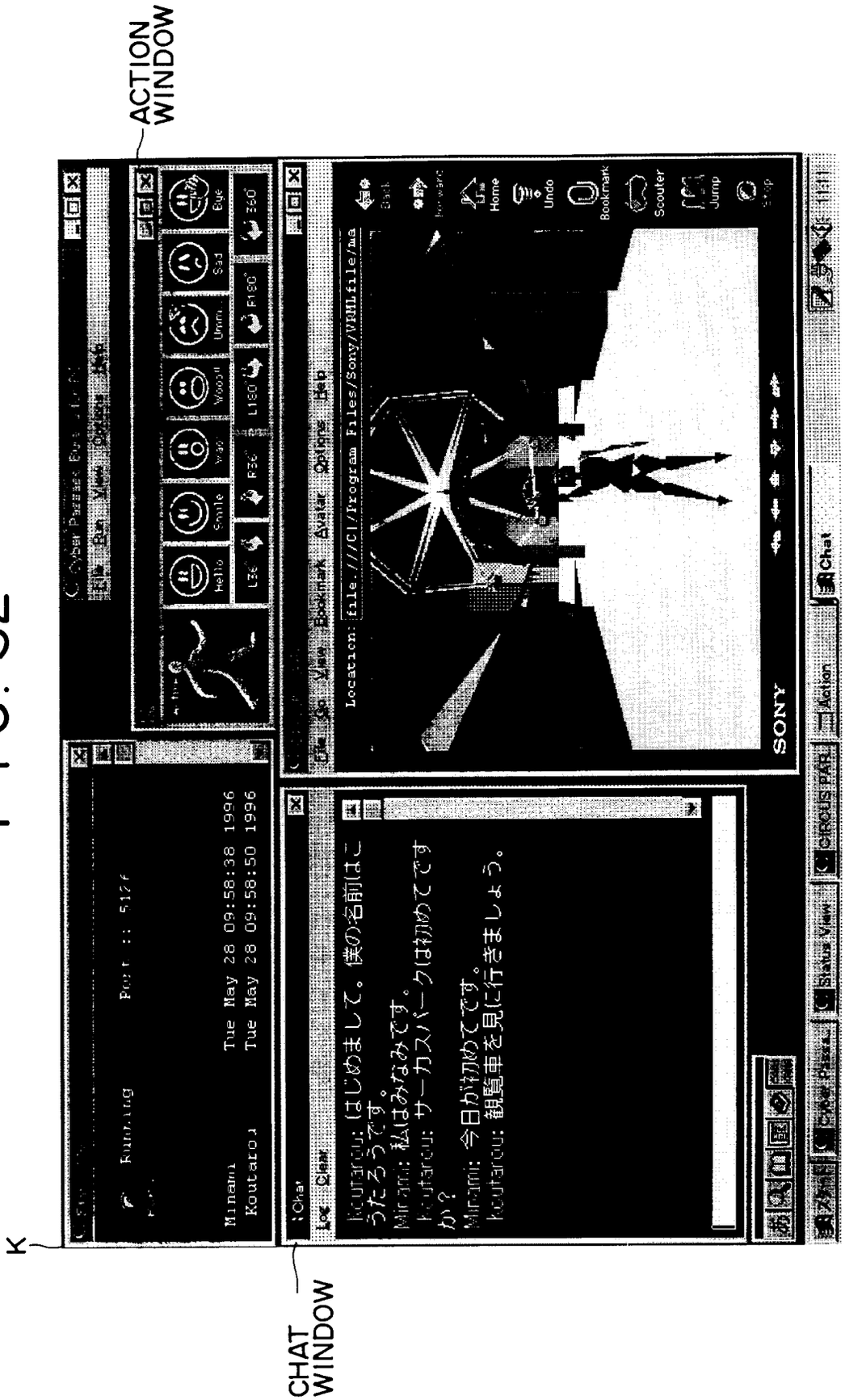
ACTION WINDOW
K
CHAT WINDOW
Minami Tue May 28 09:58:38 1996
Koutarou Tue May 28 09:58:50 1996
Location: file:///C|/Program Files/Sony/VRML file/ma
Koutarou: はじめまして。僕の名前はこうたろうです。
Minami: 私はみなみです。
Koutarou: サーカスパークは初めてですか？
Minami: 今日が初めてです。
Koutarou: 観覧車を見に行きましょう。
SONY

FIG. 33

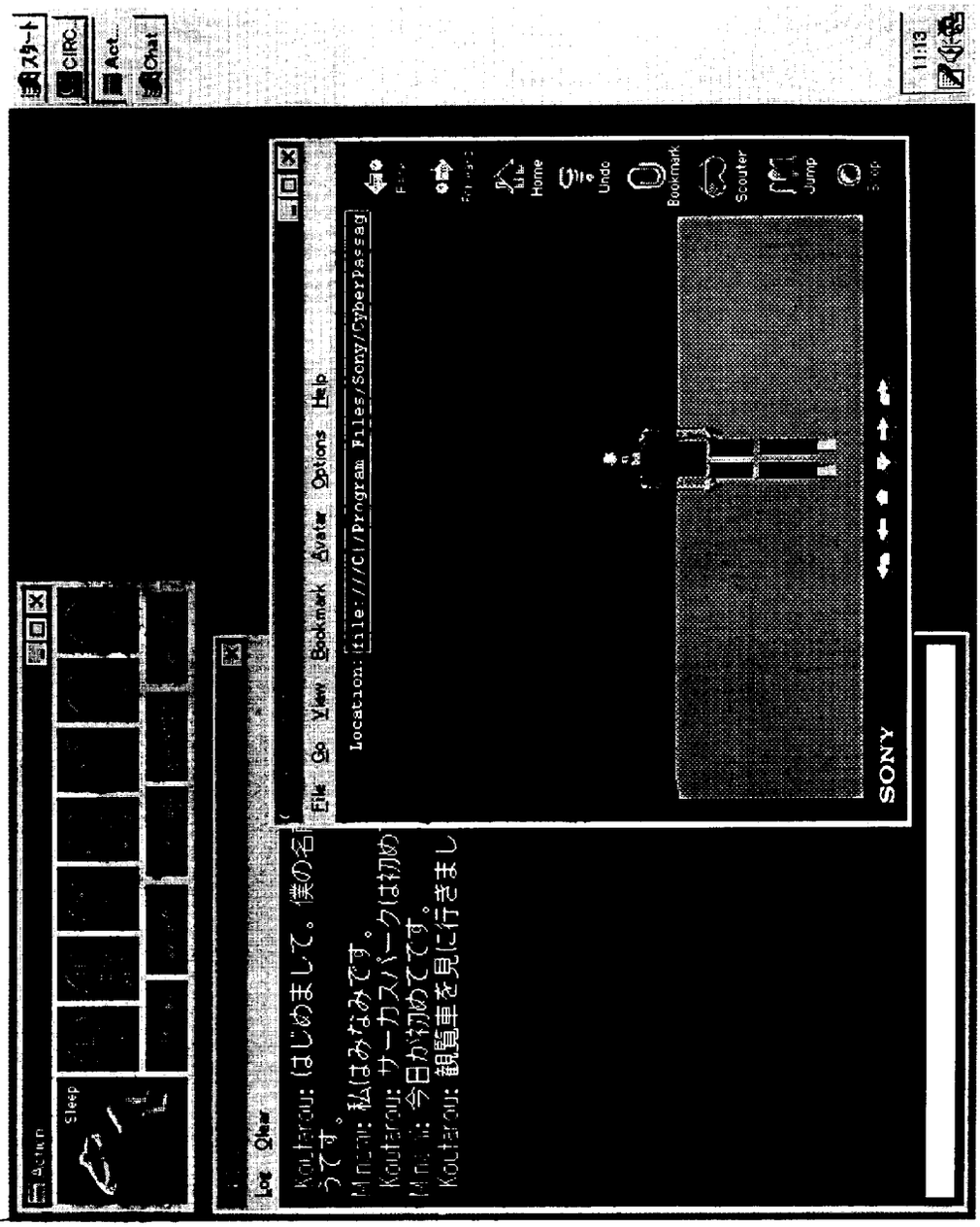
M
Action
Sleep
Log
Other
Koutarou: はじめまして。僕の名
です。
Minami: 私はみなみです。
Koutarou: サーカスパークは初め
Minami: 今日が初めてです。
Koutarou: 観覧車を見に行きまし
File
Go
View
Bookmark
Avatar
Options
Help
Location: file:///C|/Program Files/Sony/CyberPassag
Home
Undo
Bookmark
Scouter
Jump
SONY
CIRC
Act
Chat
11:13

FIG. 34

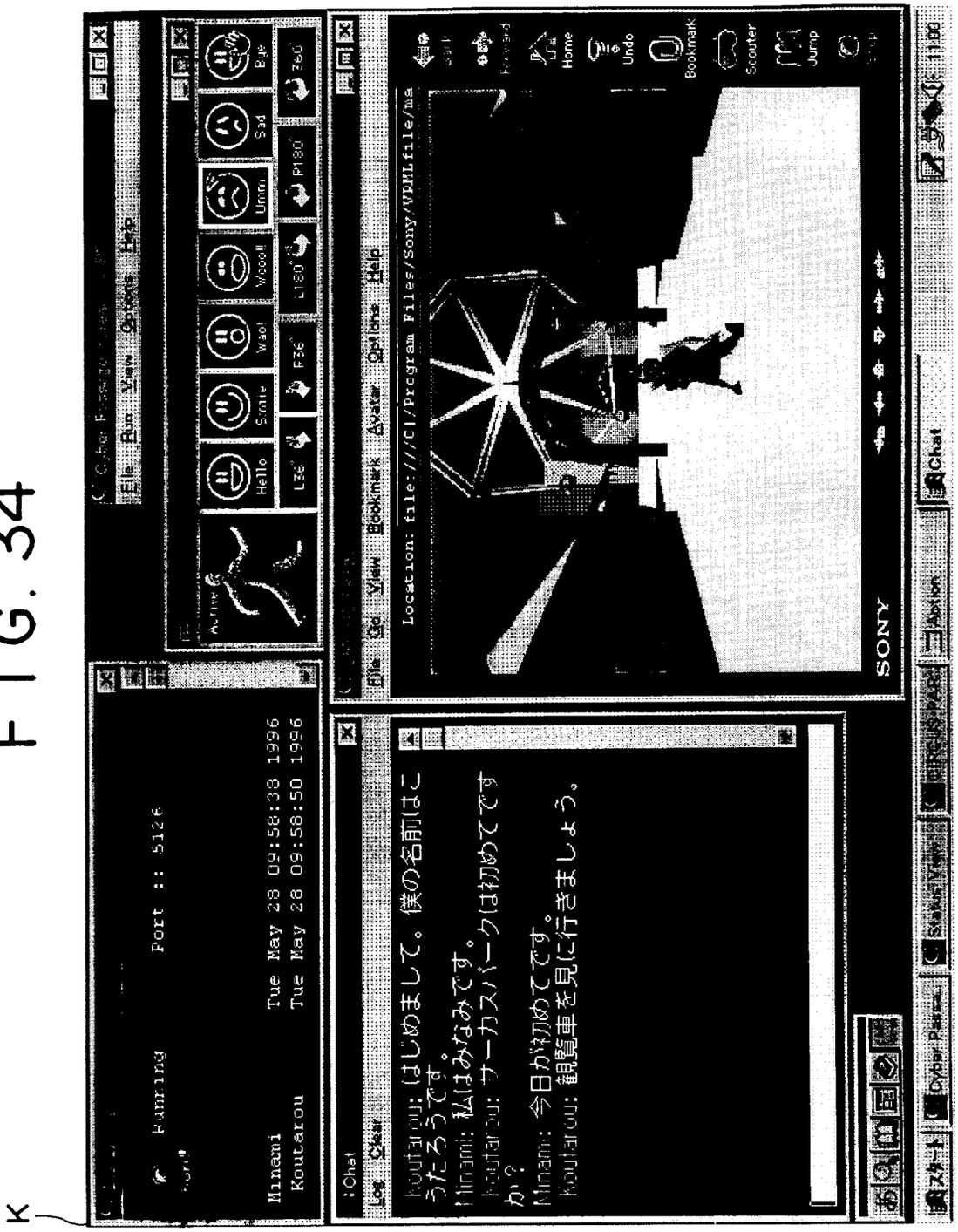
K
Running
Port :: 5126
Minami Tue May 28 09:58:38 1996
Koutarou Tue May 28 09:58:50 1996
Hello
Smile
Wao!
Wooo!!
Umm
Sad
Bye
Location: file:///C|/Program Files/Sony/VRMLfile/ma
Home
Undo
Bookmark
Scouter
Jump
SONY
Chat
Log Clear
Koutarou: はじめまして。僕の名前はこうたろうです。
Minami: 私はみなみです。
Koutarou: サーカスパークは初めてですか？
Minami: 今日が初めてです。
Koutarou: 観覧車を見に行きましょう。

F I G. 35

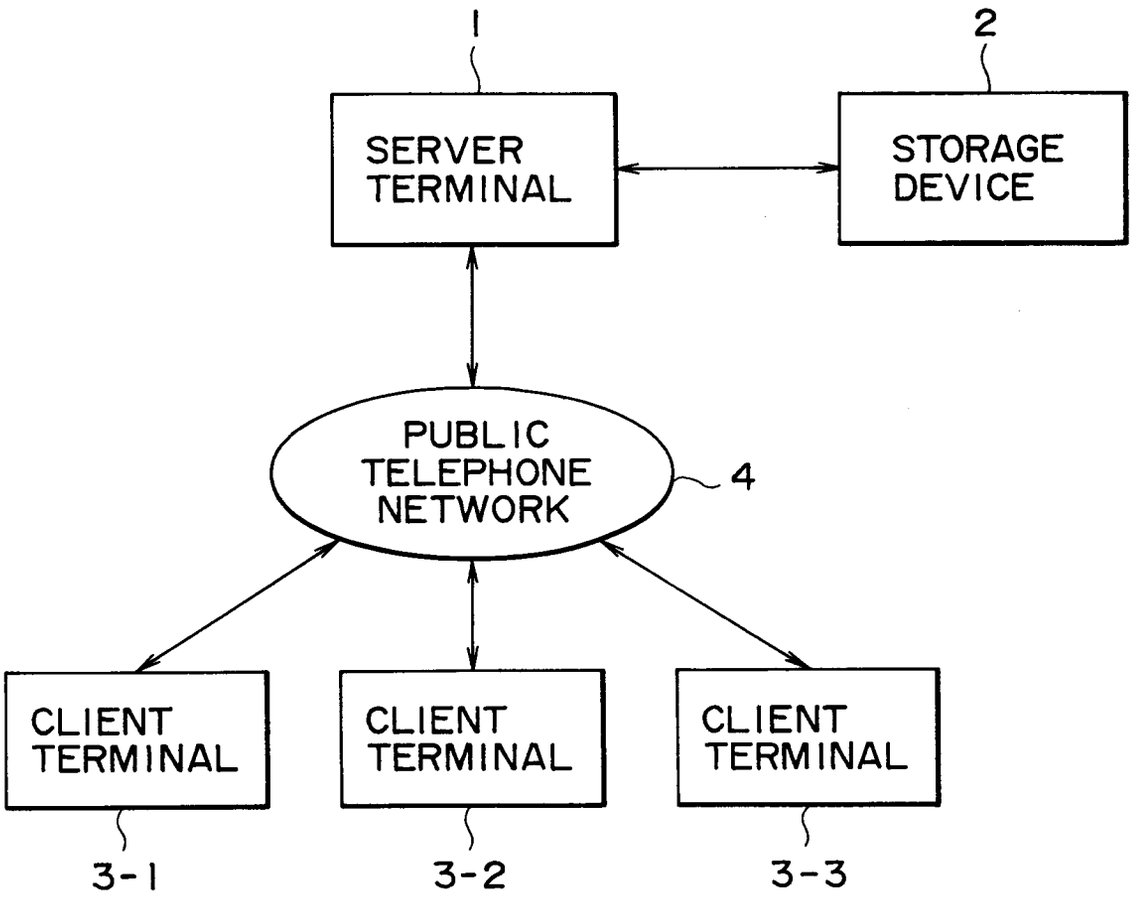
1
2
SERVER TERMINAL
STORAGE DEVICE
PUBLIC TELEPHONE NETWORK
4
CLIENT TERMINAL
CLIENT TERMINAL
CLIENT TERMINAL
3-1
3-2
3-3

FIG. 36

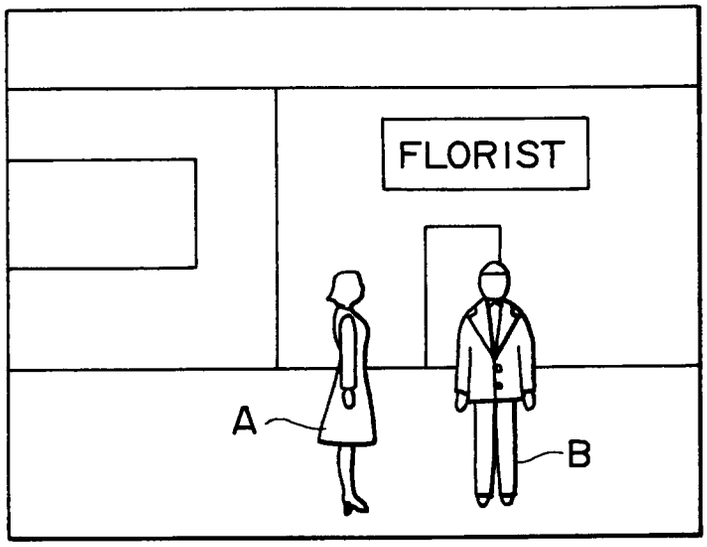

FIG. 37

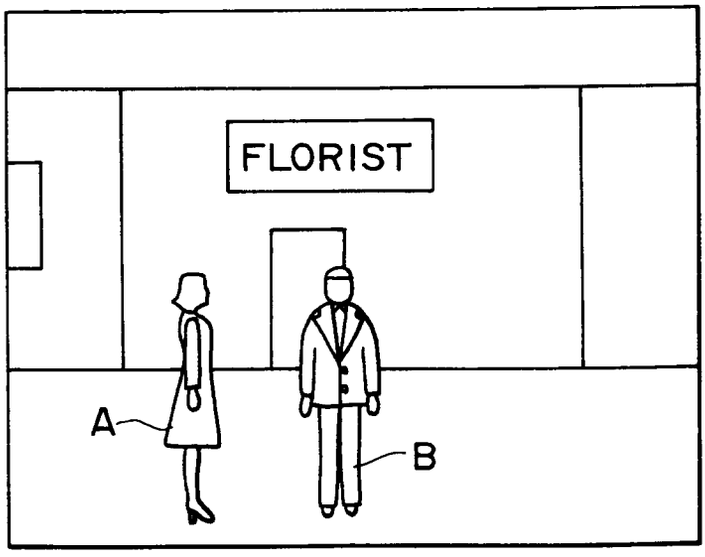

FIG. 38

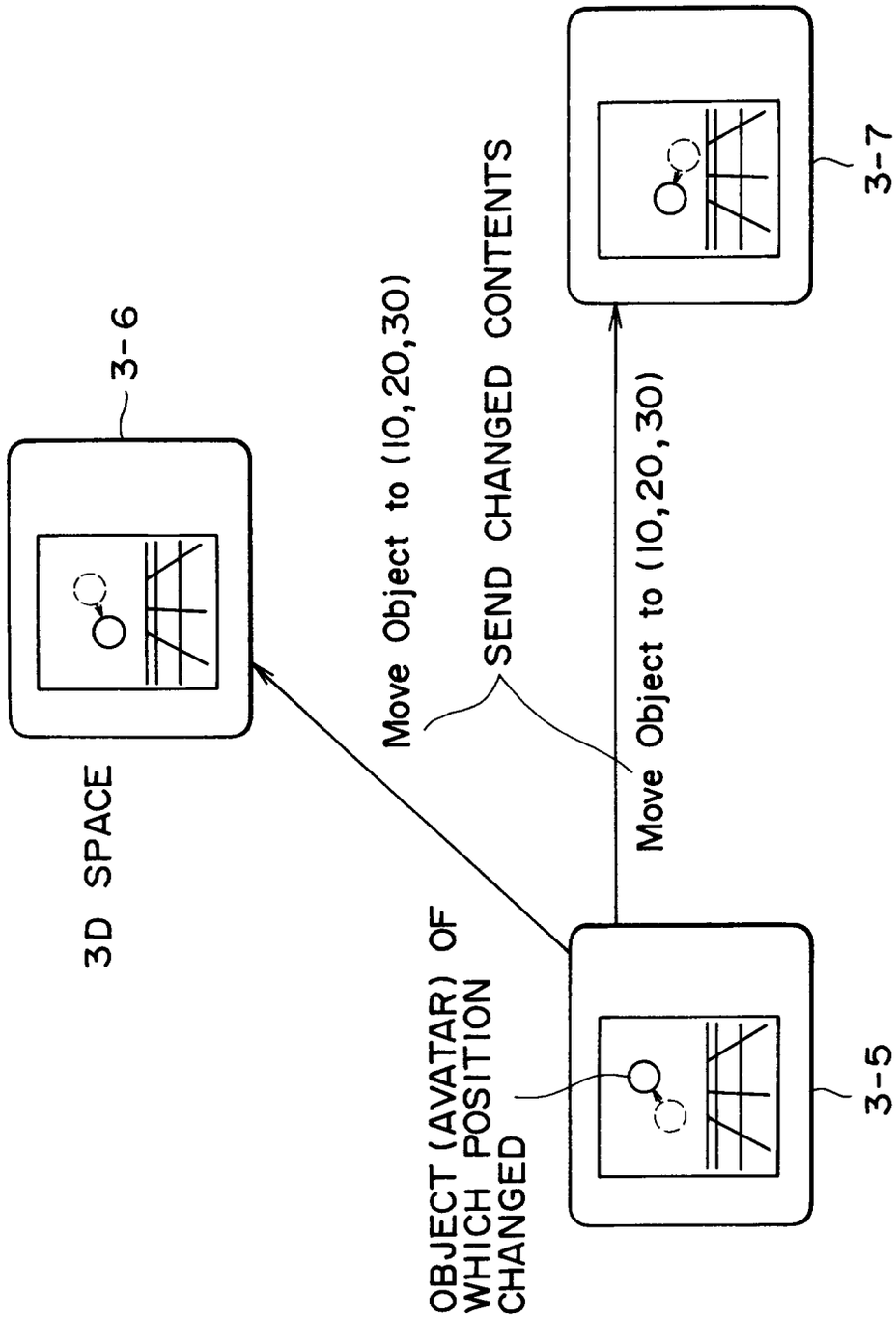
3D SPACE
3-6
Move Object to (10,20,30)
SEND CHANGED CONTENTS
Move Object to (10,20,30)
3-7
OBJECT (AVATAR) OF WHICH POSITION CHANGED
3-5