US 20100082481A1

(19) United States

(12) Patent Application Publication

Lin et al.

(10) Pub. No.: US 2010/0082481 A1

(43) Pub. Date: Apr. 1, 2010

(54) PEER-TO-PEER FINANCIAL TRANSACTION DEVICES AND METHODS

(75) Inventors: **Gloria Lin**, San Ramon, CA (US); **Amir Mahmood Mikhak**, Cambridge, MA (US); **Taido Lantz Nakajima**, Cupertino, CA (US); **Sean Anthony Mayo**, Dover, NH (US); **Michael Rosenblatt**, Campbell, CA (US)

Correspondence Address:
APPLE INC.
c/o Fletcher Yoder, PC
P.O. Box 692289
Houston, TX 77269-2289 (US)

(73) Assignee: **Apple Inc.**, Cupertino, CA (US)

(21) Appl. No.: **12/286,488**

(22) Filed: **Sep. 30, 2008**

Publication Classification

(51) **Int. Cl.**

G06Q 20/00	(2006.01)
G06Q 40/00	(2006.01)
H04L 9/32	(2006.01)
H04N 5/225	(2006.01)

(52) **U.S. Cl.** **705/41**; 705/35; 705/44; 348/207.1

(57) **ABSTRACT**

Various techniques are provided for carrying out peer-to-peer financial transactions using one or more electronic devices. In one embodiment, a request for payment is transmitted from a first device to a second device using a near field communication (NFC) interface. In response to the request, the second device may transmit payment information to the first device. The first device may select a crediting account and, using a suitable communication protocol, may communicate the received payment information and selected crediting account to one or more external financial servers configured to process and determine whether the payment may be authorized. If the payment is authorized, a payment may be credited to the selected crediting account. In a further embodiment, a device may include a camera configured to obtain an image of a payment instrument. The device may further include an application to extract payment information from the acquired image.

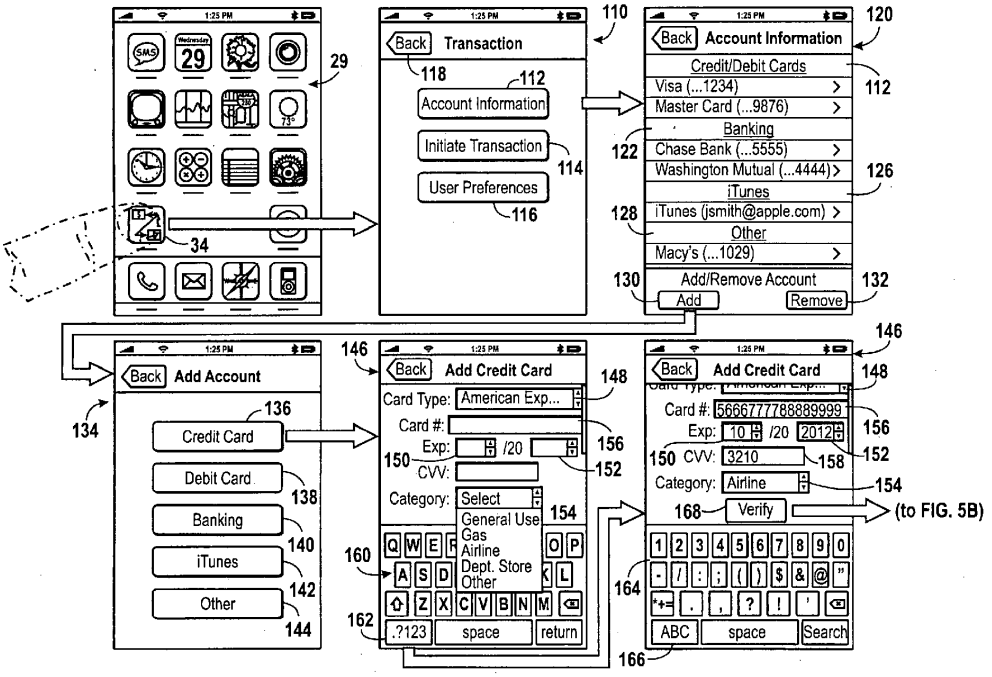

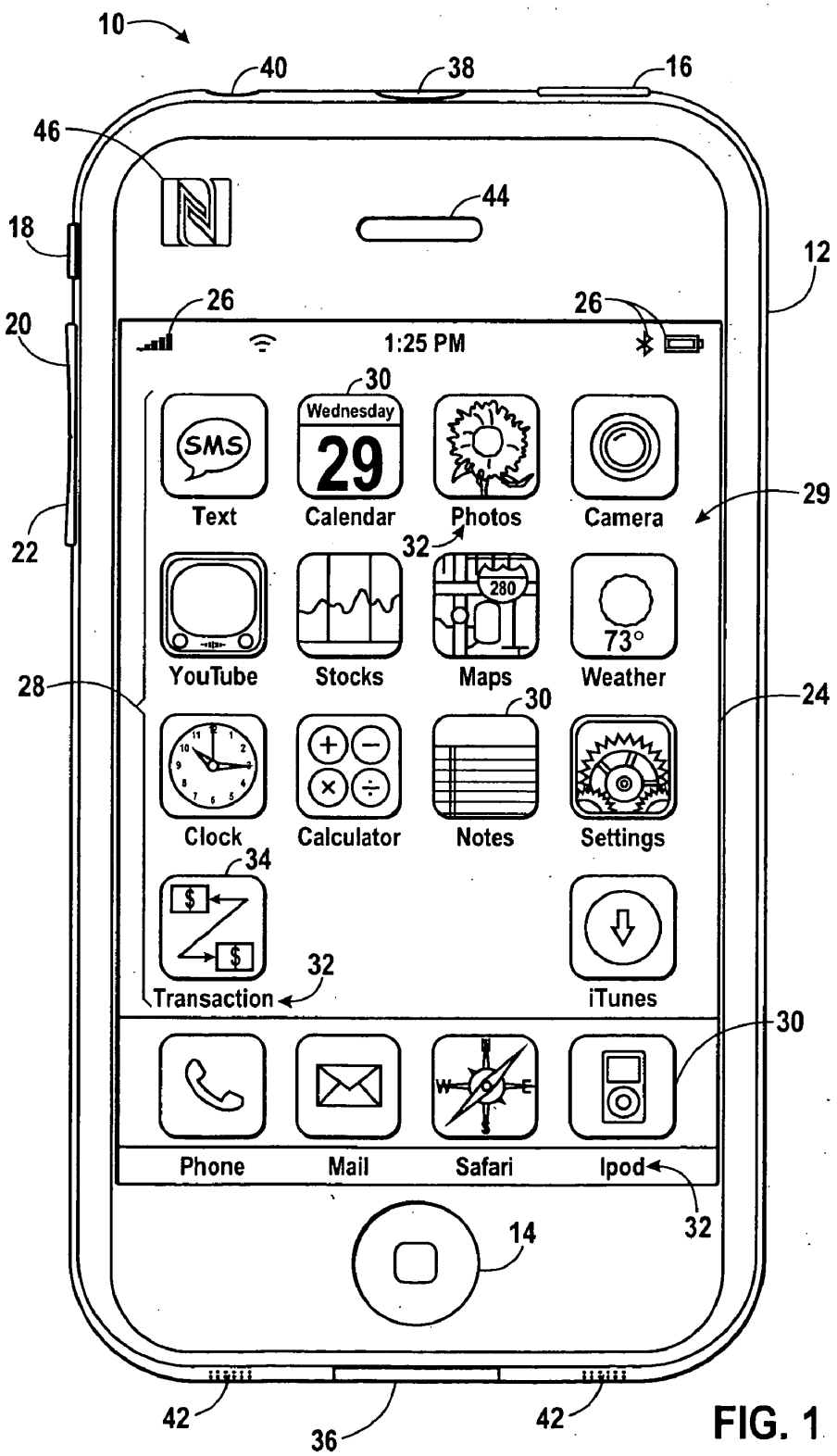
10
40
38
16
46
44
18
12
26
26
20
1:25 PM
30
Wednesday
29
SMS
Text
Calendar
Photos
Camera
29
22
32
280
73°
YouTube
Stocks
Maps
Weather
28
24
30
Clock
Calculator
Notes
Settings
34
Transaction
32
iTunes
30
Phone
Mail
Safari
Ipod
32
14
42
36
42

FIG. 1

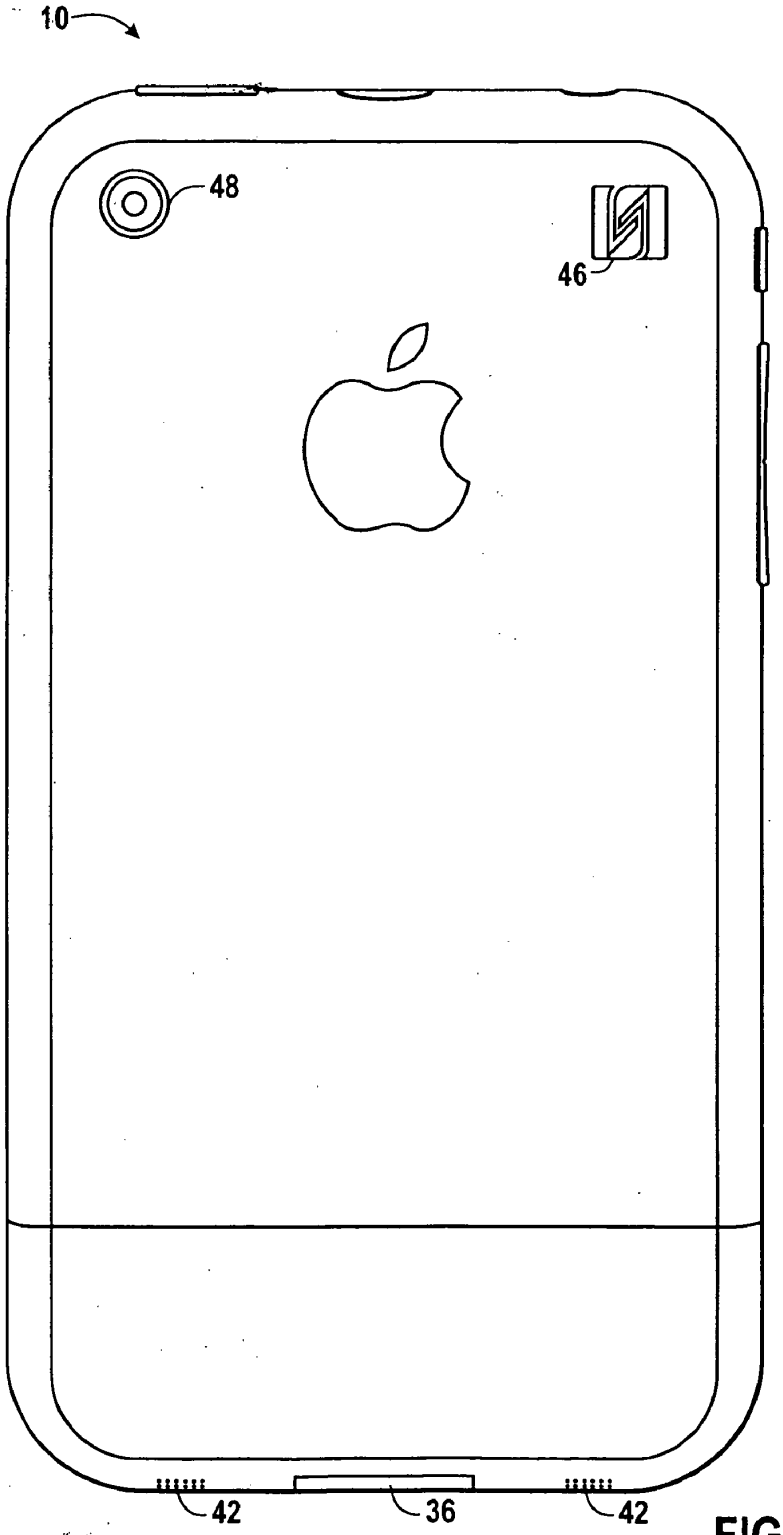

FIG. 2

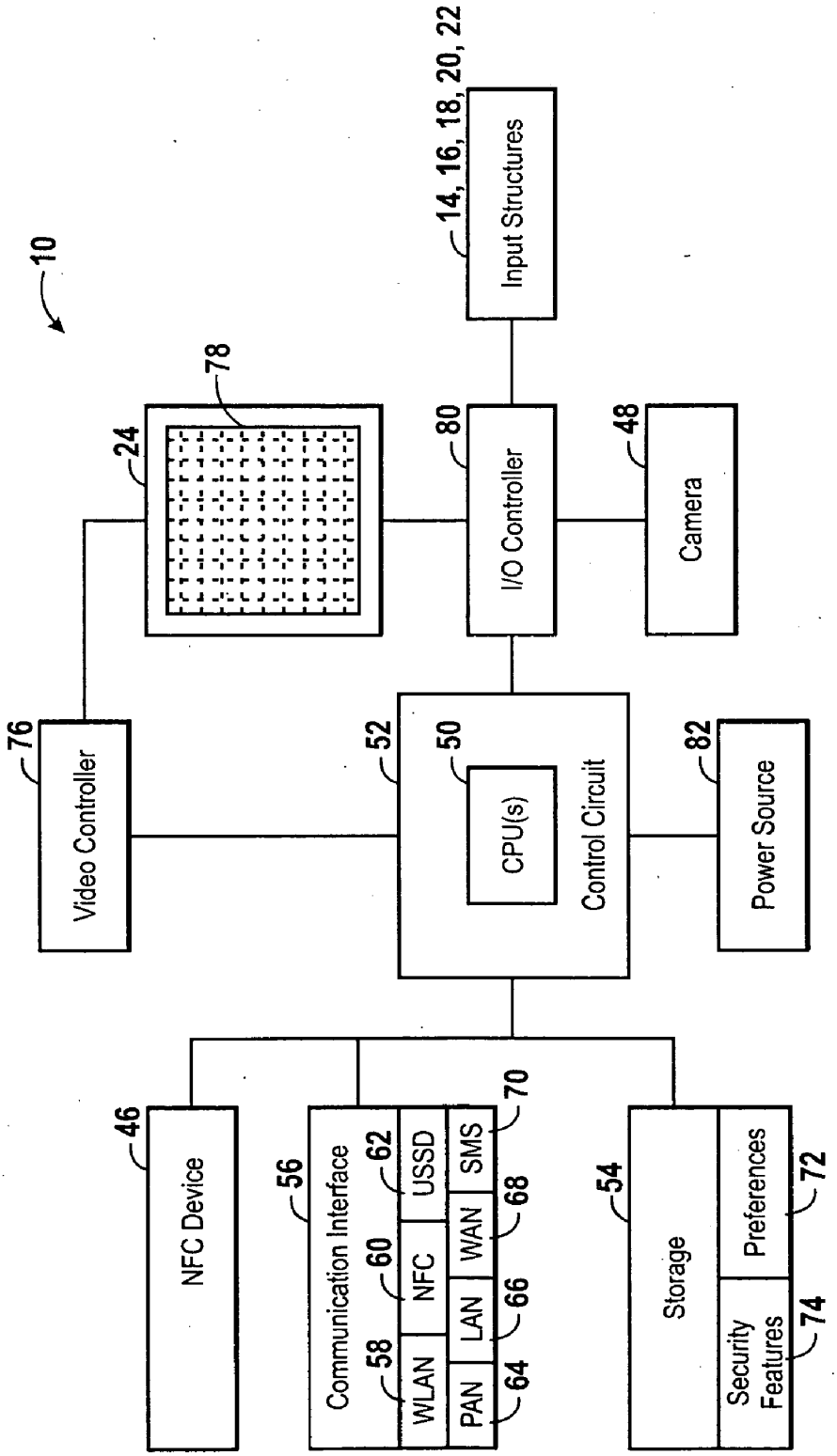
10
14, 16, 18, 20, 22
Input Structures
78
24
80
I/O Controller
48
Camera
76
Video Controller
52
50
CPU(s)
Control Circuit
82
Power Source
46
NFC Device
56
Communication Interface
62
USSD
70
SMS
60
NFC
68
WAN
58
WLAN
66
LAN
64
PAN
54
Storage
Preferences
72
Security Features
74

FIG. 3

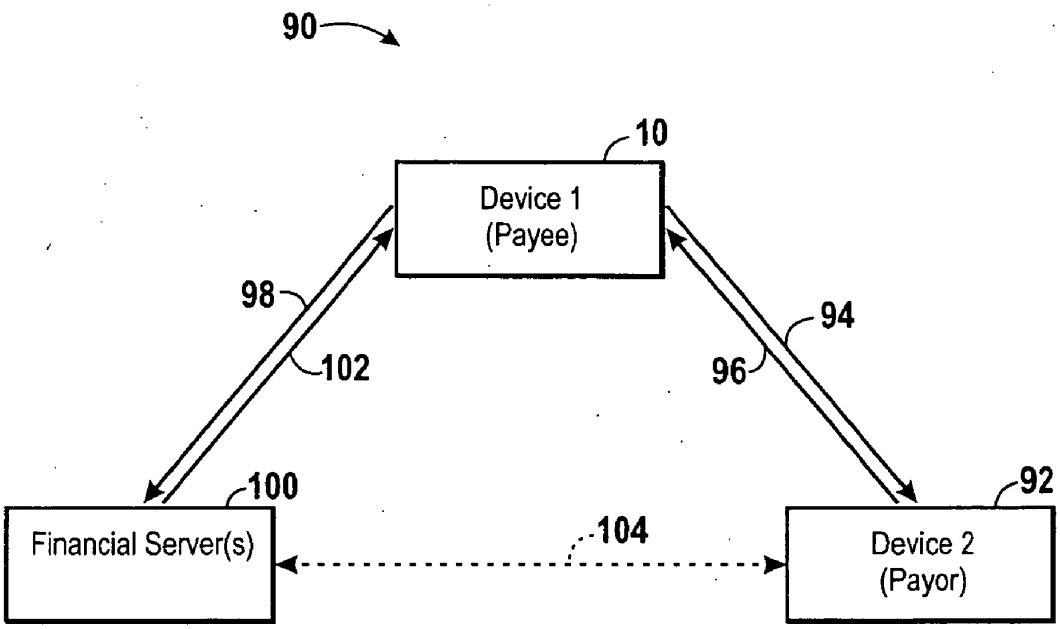
90
10
Device 1
(Payee)
98
102
94
96
100
Financial Server(s)
104
92
Device 2
(Payor)

FIG. 4

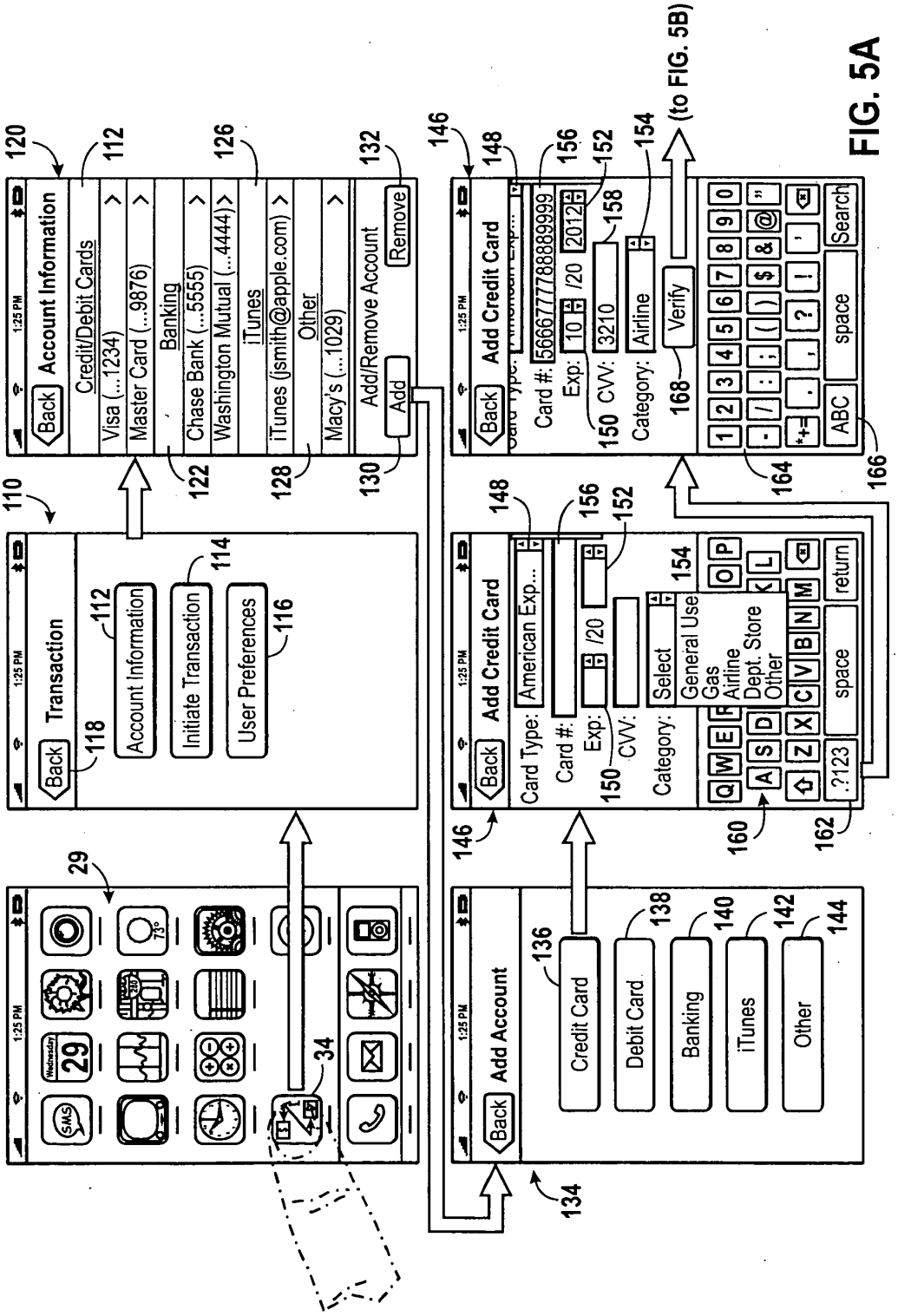
Account Information
Credit/Debit Cards
Visa (...1234)
Master Card (...9876)
Banking
Chase Bank (...5555)
Washington Mutual (...4444)
iTunes
iTunes (jsmith@apple.com)
Other
Macy's (...1029)
Add/Remove Account
Add
Remove
Transaction
Account Information
Initiate Transaction
User Preferences
Add Credit Card
American Exp...
Card #: 566677778888999
Exp: 10 /20 2012
CVV: 3210
Category: Airline
Verify
Select
General Use
Gas
Airline
Dept. Store
Other
Add Account
Credit Card
Debit Card
Banking
iTunes
Other
(to FIG. 5B)

FIG. 5A

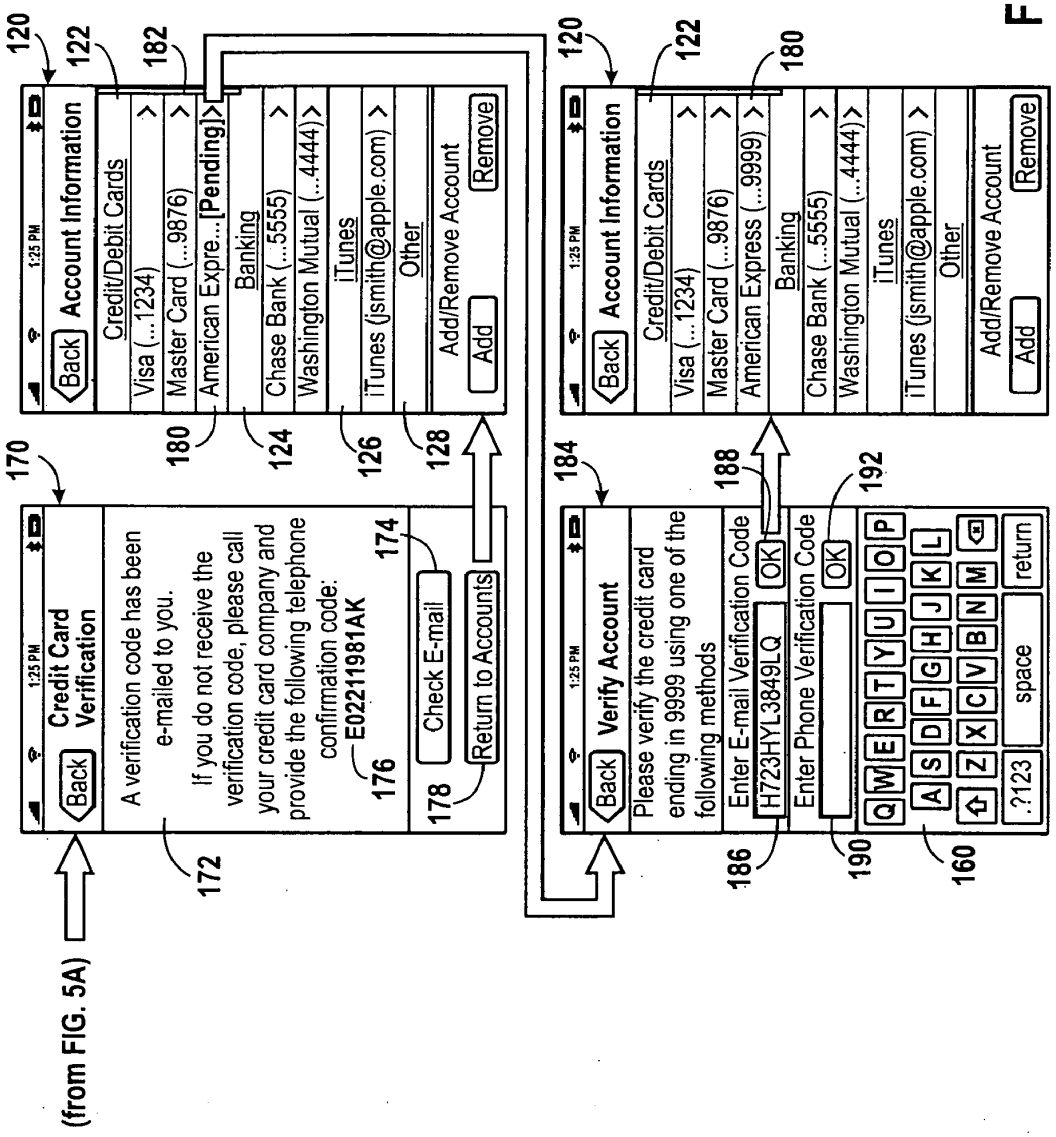
(from FIG. 5A)
170
Back
Credit Card Verification
1:25 PM
A verification code has been e-mailed to you.
If you do not receive the verification code, please call your credit card company and provide the following telephone confirmation code:
E02211981AK
172
176
174
Check E-mail
Return to Accounts
178
120
Back
Account Information
122
182
Credit/Debit Cards
Visa (...1234)
Master Card (...9876)
American Expre...[Pending]
Banking
Chase Bank (...5555)
Washington Mutual (...4444)
iTunes
iTunes (jsmith@apple.com)
Other
Add/Remove Account
Add
Remove
180
124
126
128
184
Back
Verify Account
Please verify the credit card ending in 9999 using one of the following methods
Enter E-mail Verification Code
H723HYL3849LQ
OK
Enter Phone Verification Code
OK
186
188
190
192
160
120
Back
Account Information
122
180
Credit/Debit Cards
Visa (...1234)
Master Card (...9876)
American Express (...9999)
Banking
Chase Bank (...5555)
Washington Mutual (...4444)
iTunes
iTunes (jsmith@apple.com)
Other
Add/Remove Account
Add
Remove

FIG. 5B

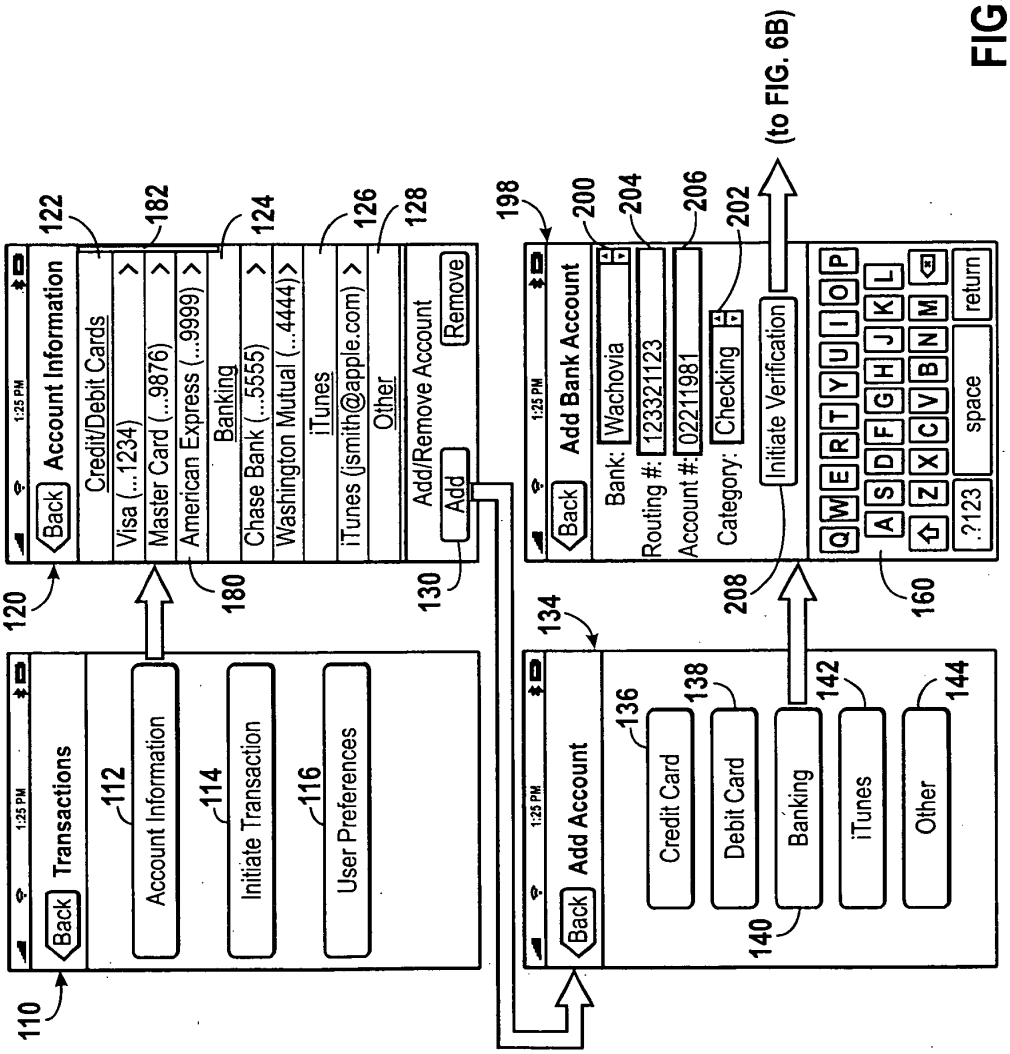
Back
Transactions
Account Information
Initiate Transaction
User Preferences
Account Information
Credit/Debit Cards
Visa (...1234)
Master Card (...9876)
American Express (...9999)
Banking
Chase Bank (...5555)
Washington Mutual (...4444)
iTunes
iTunes (jsmith@apple.com)
Other
Add/Remove Account
Add
Remove
Add Account
Credit Card
Debit Card
Banking
iTunes
Other
Add Bank Account
Bank: Wachovia
Routing #: 123321123
Account #: 02211981
Category: Checking
Initiate Verification
space
return
(to FIG. 6B)
110
112
114
116
120
122
124
126
128
130
134
136
138
140
142
144
160
180
182
198
200
202
204
206
208

FIG. 6A

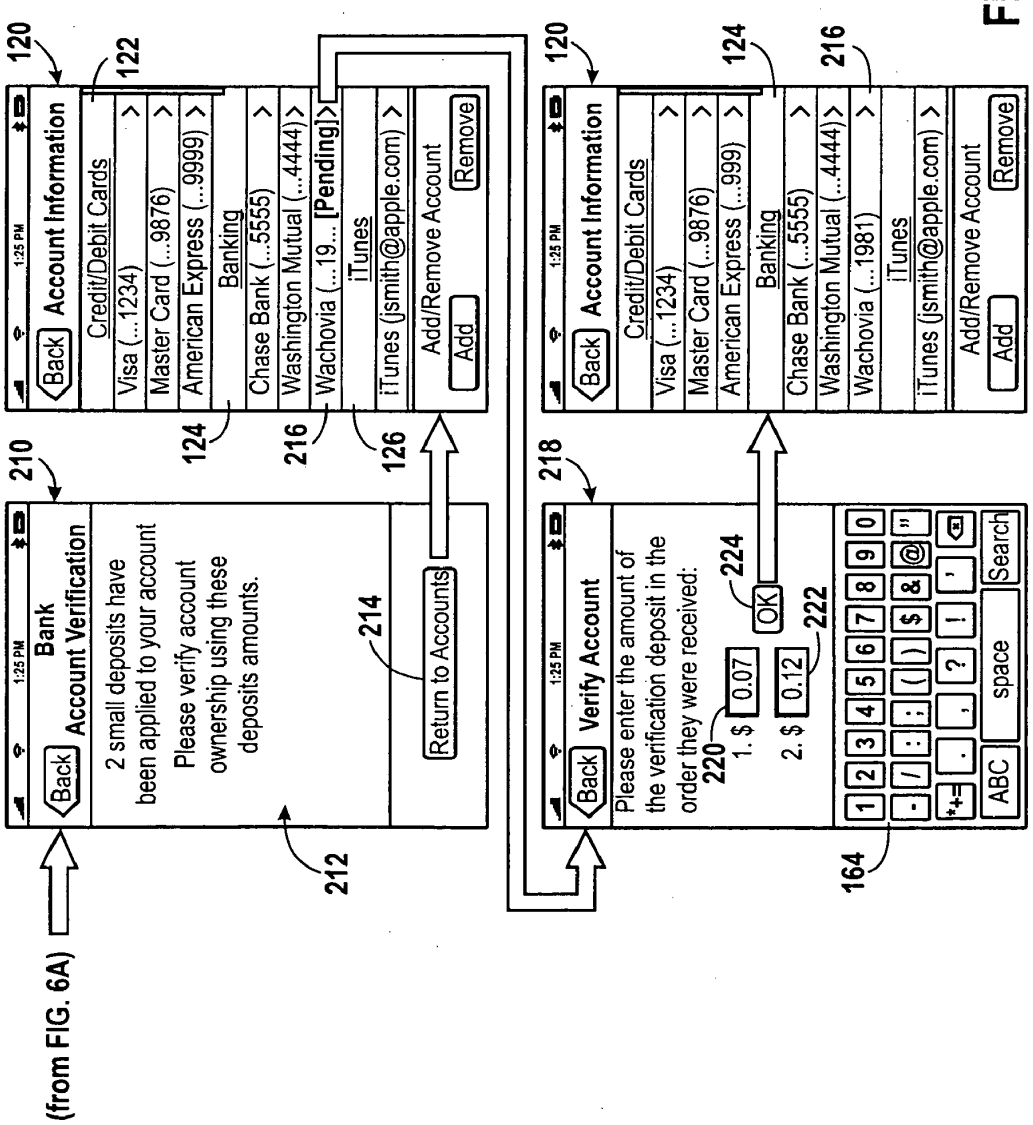
(from FIG. 6A)
210
Back
Bank
Account Verification
2 small deposits have been applied to your account
Please verify account ownership using these deposits amounts.
212
214
Return to Accounts
120
Back
Account Information
122
Credit/Debit Cards
Visa (...1234)
Master Card (...9876)
American Express (...9999)
124
Banking
Chase Bank (...5555)
Washington Mutual (...4444)
Wachovia (...19... [Pending]
216
126
iTunes
iTunes (jsmith@apple.com)
Add/Remove Account
Add
Remove
218
Verify Account
Please enter the amount of the verification deposit in the order they were received:
220
1. $ 0.07
2. $ 0.12
222
224
OK
164
ABC
space
Search
120
Account Information
Credit/Debit Cards
Visa (...1234)
Master Card (...9876)
American Express (...999)
124
Banking
Chase Bank (...5555)
Washington Mutual (...4444)
Wachovia (...1981)
216
iTunes
iTunes (jsmith@apple.com)
Add/Remove Account
Add
Remove

FIG. 6B

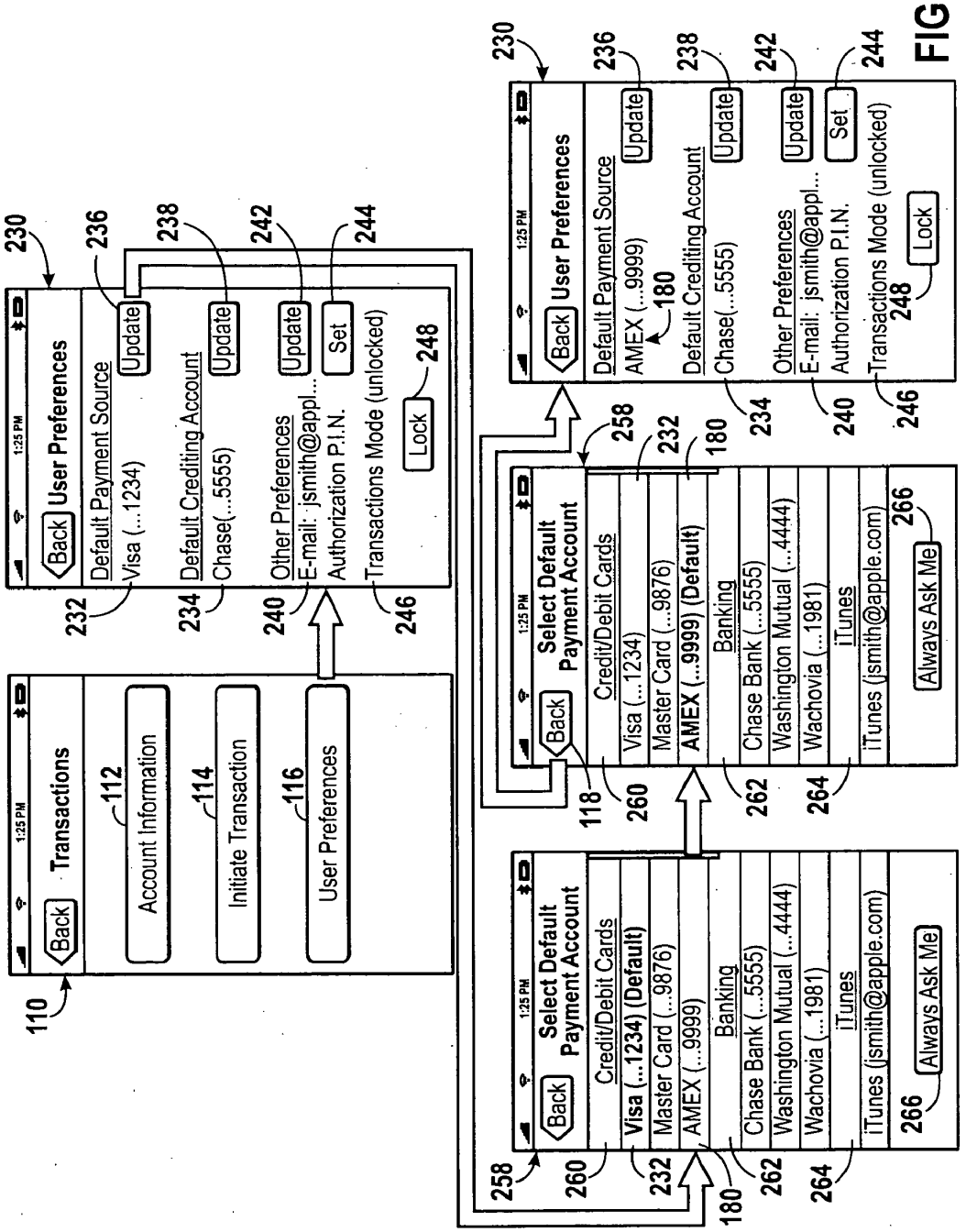
1:25 PM
Back
Transactions
Account Information
Initiate Transaction
User Preferences
110
112
114
116
User Preferences
Default Payment Source
Visa (...1234)
Update
Default Crediting Account
Chase(...5555)
Update
Other Preferences
E-mail: jsmith@appl...
Update
Authorization P.I.N.
Set
Transactions Mode (unlocked)
Lock
230
232
234
236
238
240
242
244
246
248
Select Default Payment Account
Credit/Debit Cards
Visa (...1234)
Visa (...1234) (Default)
Master Card (...9876)
AMEX (...9999)
AMEX (...9999) (Default)
Banking
Chase Bank (...5555)
Washington Mutual (...4444)
Wachovia (...1981)
iTunes
iTunes (jsmith@apple.com)
Always Ask Me
180
258
260
262
264
266
118

FIG. 7

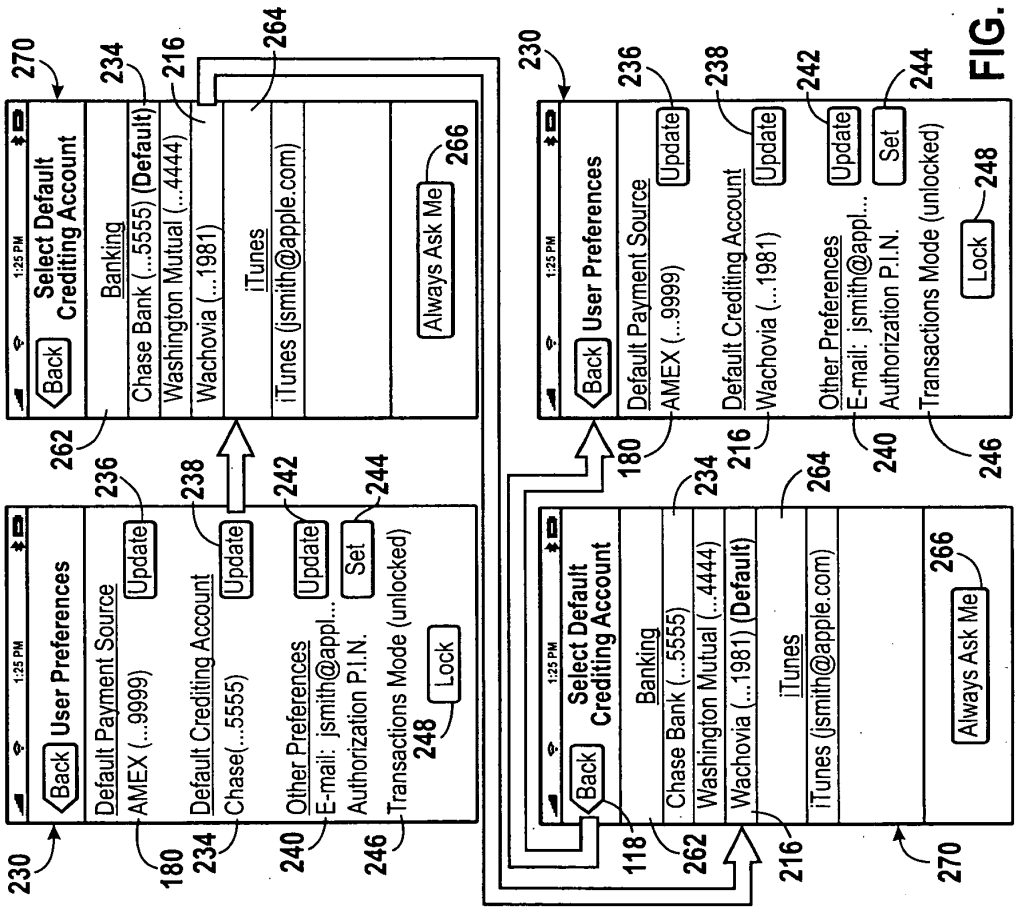
1:25 PM
Back
User Preferences
Default Payment Source
AMEX (...9999)
Update
Default Crediting Account
Chase(...5555)
Update
Other Preferences
E-mail: jsmith@appl...
Authorization P.I.N.
Update
Set
Transactions Mode (unlocked)
Lock
Select Default Crediting Account
Banking
Chase Bank (...5555) (Default)
Washington Mutual (...4444)
Wachovia (...1981)
iTunes
iTunes (jsmith@apple.com)
Always Ask Me
230
180
234
240
246
236
238
242
244
262
216
264
266
270
118
248

FIG. 8

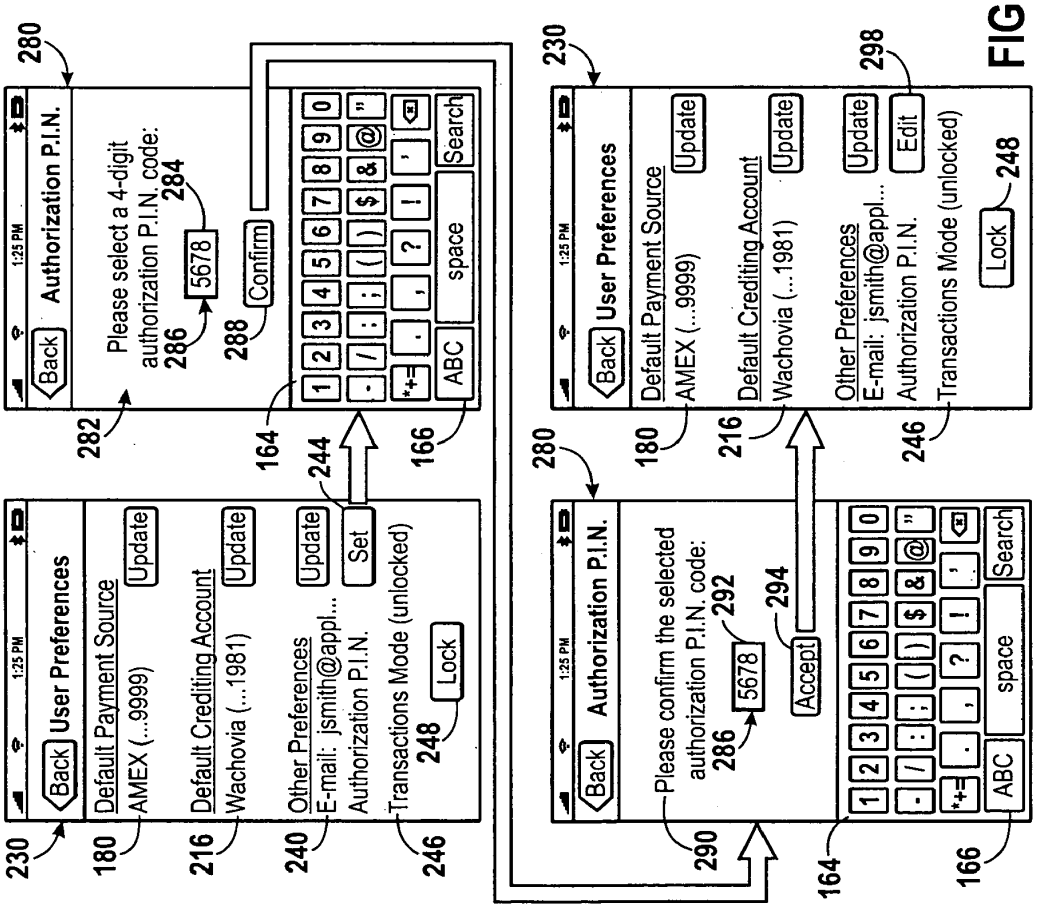
1:25 PM
Back
User Preferences
Default Payment Source
AMEX (...9999)
Update
Default Crediting Account
Wachovia (...1981)
Update
Other Preferences
E-mail: jsmith@appl...
Update
Set
Authorization P.I.N.
Transactions Mode (unlocked)
Lock
Back
Authorization P.I.N.
Please select a 4-digit authorization P.I.N. code:
5678
Confirm
ABC
space
Search
Back
Authorization P.I.N.
Please confirm the selected authorization P.I.N. code:
5678
Accept
ABC
space
Search
Back
User Preferences
Default Payment Source
AMEX (...9999)
Update
Default Crediting Account
Wachovia (...1981)
Update
Other Preferences
E-mail: jsmith@appl...
Update
Edit
Authorization P.I.N.
Transactions Mode (unlocked)
Lock
230
180
216
240
246
248
244
164
166
280
282
284
286
288
290
292
294
298

FIG. 9

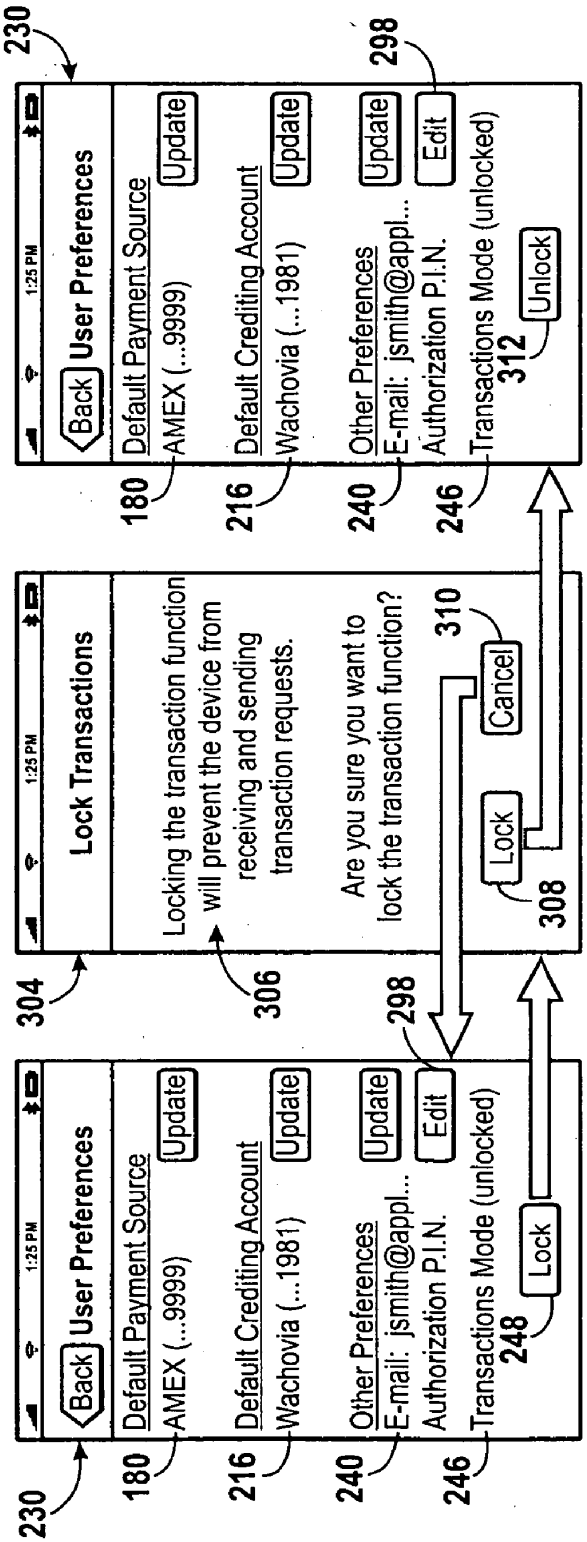
230
1:25 PM
Back
User Preferences
Default Payment Source
AMEX (...9999)
Update
Default Crediting Account
Wachovia (...1981)
Update
Other Preferences
E-mail: jsmith@appl...
Authorization P.I.N.
Update
Transactions Mode (unlocked)
Edit
Lock
180
216
240
246
248
298
304
Lock Transactions
Locking the transaction function will prevent the device from receiving and sending transaction requests.
306
Are you sure you want to lock the transaction function?
Lock
Cancel
308
310
312
Unlock

FIG. 10A

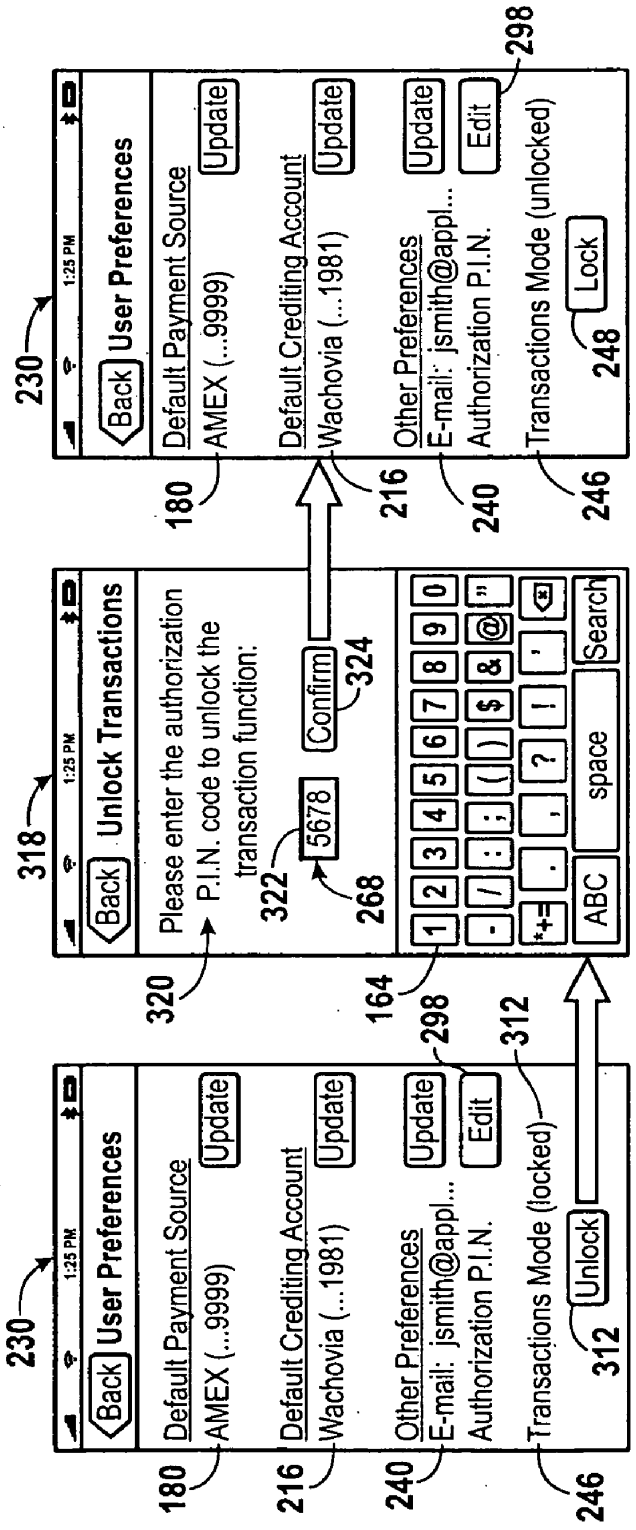
230
1:25 PM
Back
User Preferences
Default Payment Source
AMEX (...9999)
Update
Default Crediting Account
Wachovia (...1981)
Update
Other Preferences
E-mail: jsmith@appl...
Authorization P.I.N.
Update
Edit
Transactions Mode (locked)
Unlock
180
216
240
246
298
312
318
Back
Unlock Transactions
Please enter the authorization P.I.N. code to unlock the transaction function:
5678
Confirm
320
322
268
324
164
ABC
space
Search
230
1:25 PM
Back
User Preferences
Default Payment Source
AMEX (...9999)
Update
Default Crediting Account
Wachovia (...1981)
Update
Other Preferences
E-mail: jsmith@appl...
Authorization P.I.N.
Update
Edit
Transactions Mode (unlocked)
Lock
180
216
240
246
248
298

FIG. 10B

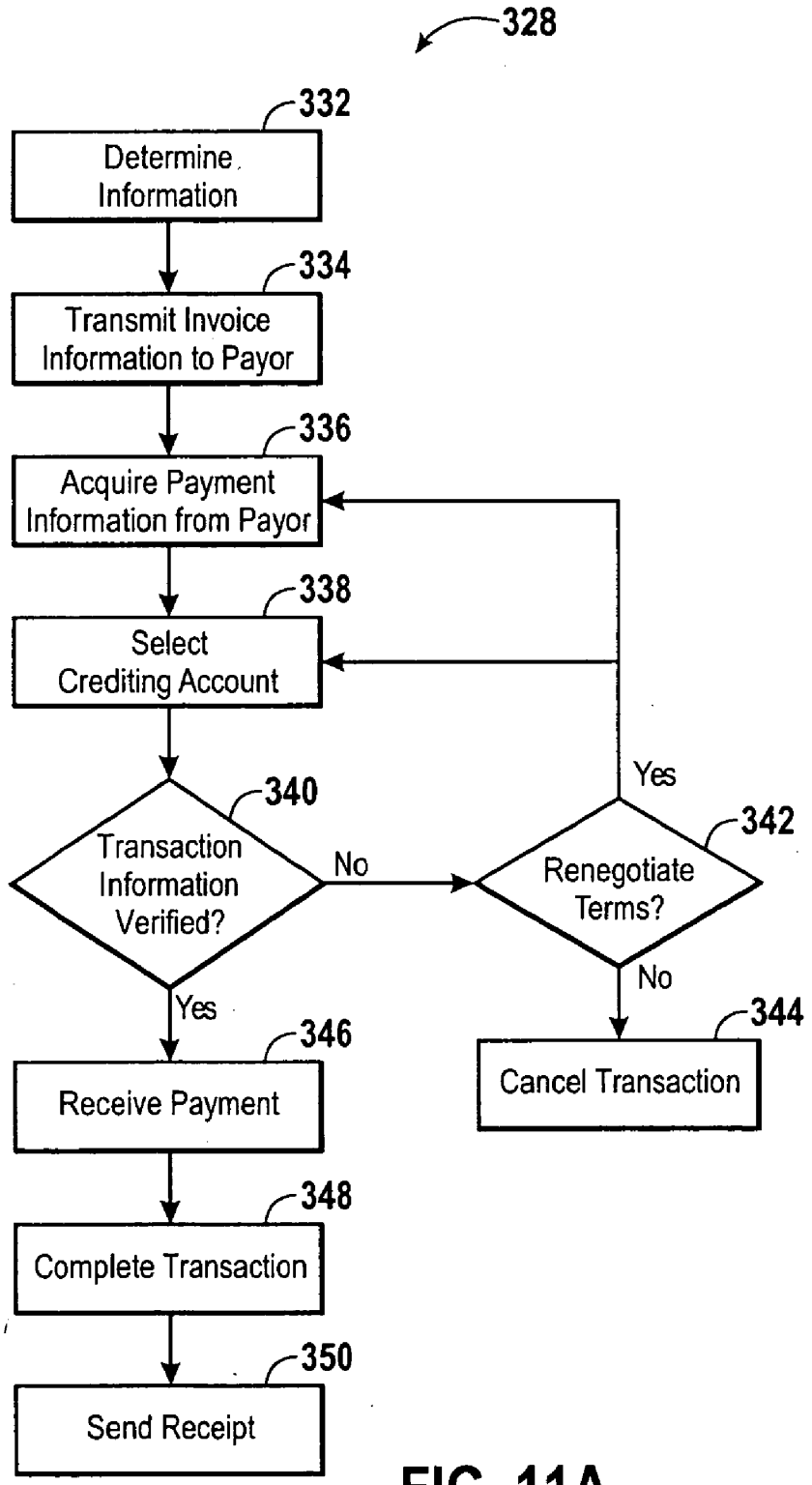
328
332
Determine Information
334
Transmit Invoice Information to Payor
336
Acquire Payment Information from Payor
338
Select Crediting Account
340
Transaction Information Verified?
No
342
Renegotiate Terms?
Yes
No
344
Cancel Transaction
Yes
346
Receive Payment
348
Complete Transaction
350
Send Receipt

FIG. 11A

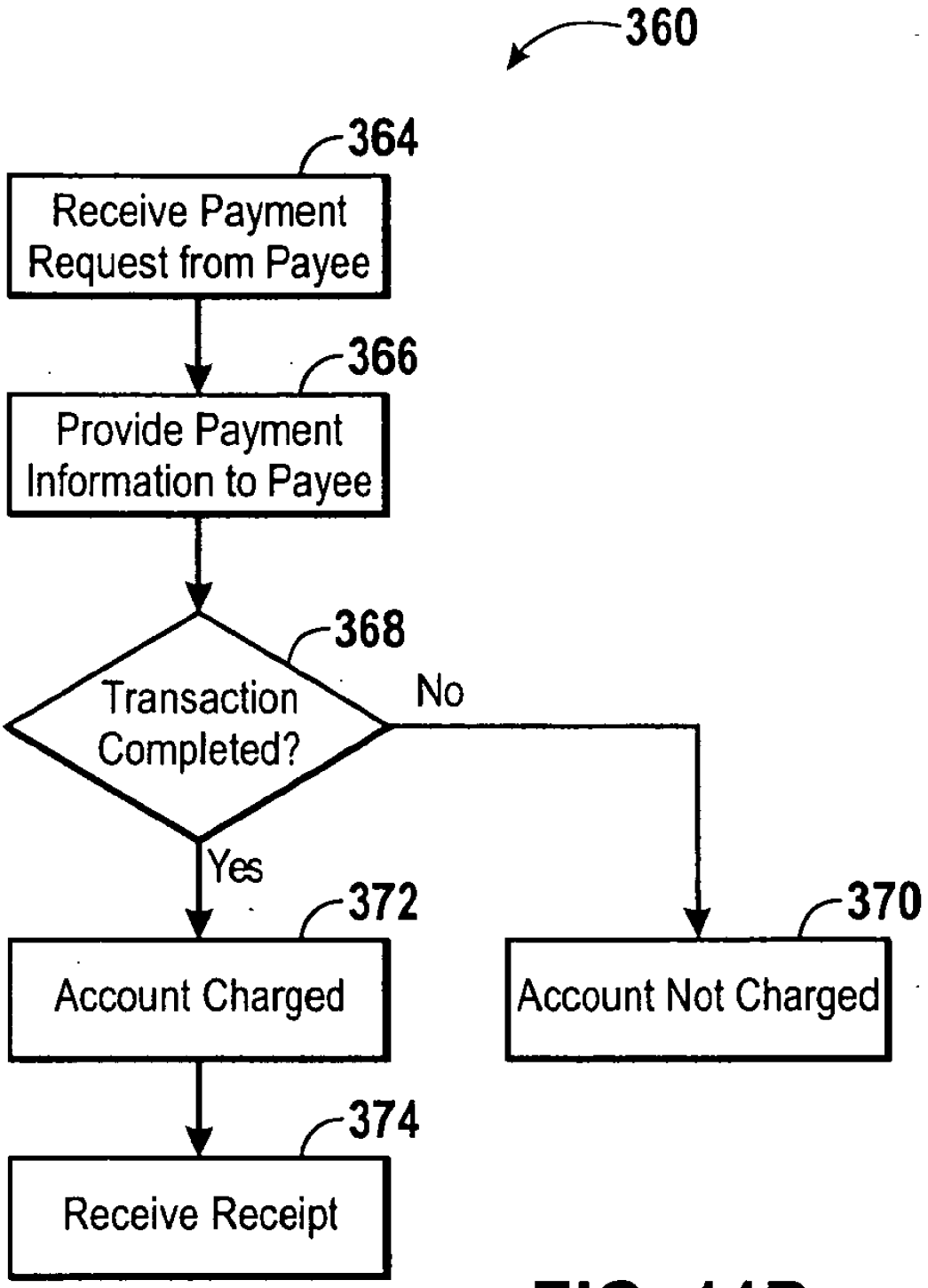
360
364
Receive Payment Request from Payee
366
Provide Payment Information to Payee
368
Transaction Completed?
No
Yes
372
Account Charged
370
Account Not Charged
374
Receive Receipt

FIG. 11B

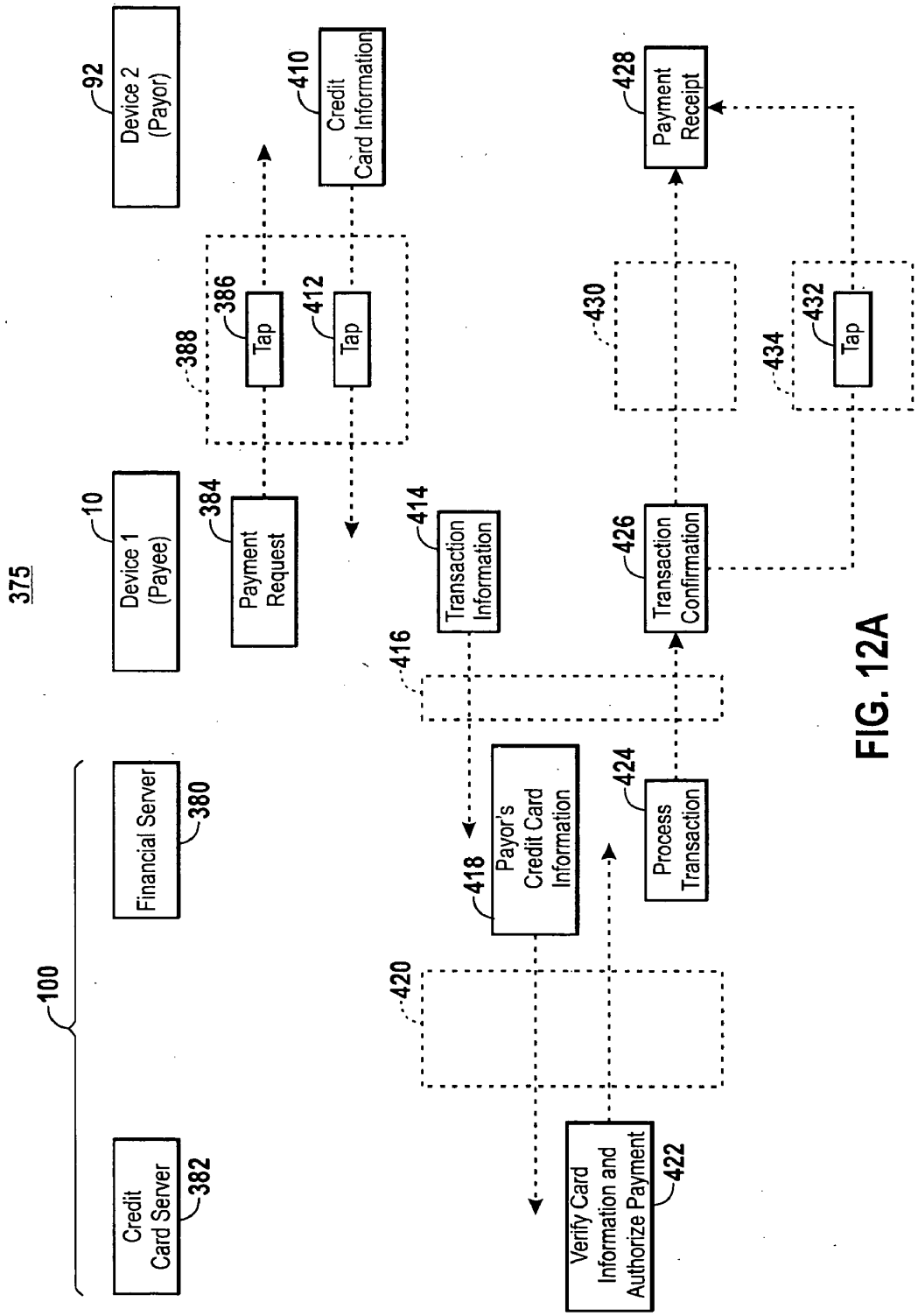
375
100
Device 2 (Payor)
92
Device 1 (Payee)
10
Financial Server
380
Credit Card Server
382
Payment Request
384
Tap
386
388
Tap
412
Credit Card Information
410
Transaction Information
414
416
Payor's Credit Card Information
418
420
Verify Card Information and Authorize Payment
422
Process Transaction
424
Transaction Confirmation
426
430
Payment Receipt
428
Tap
432
434

FIG. 12A

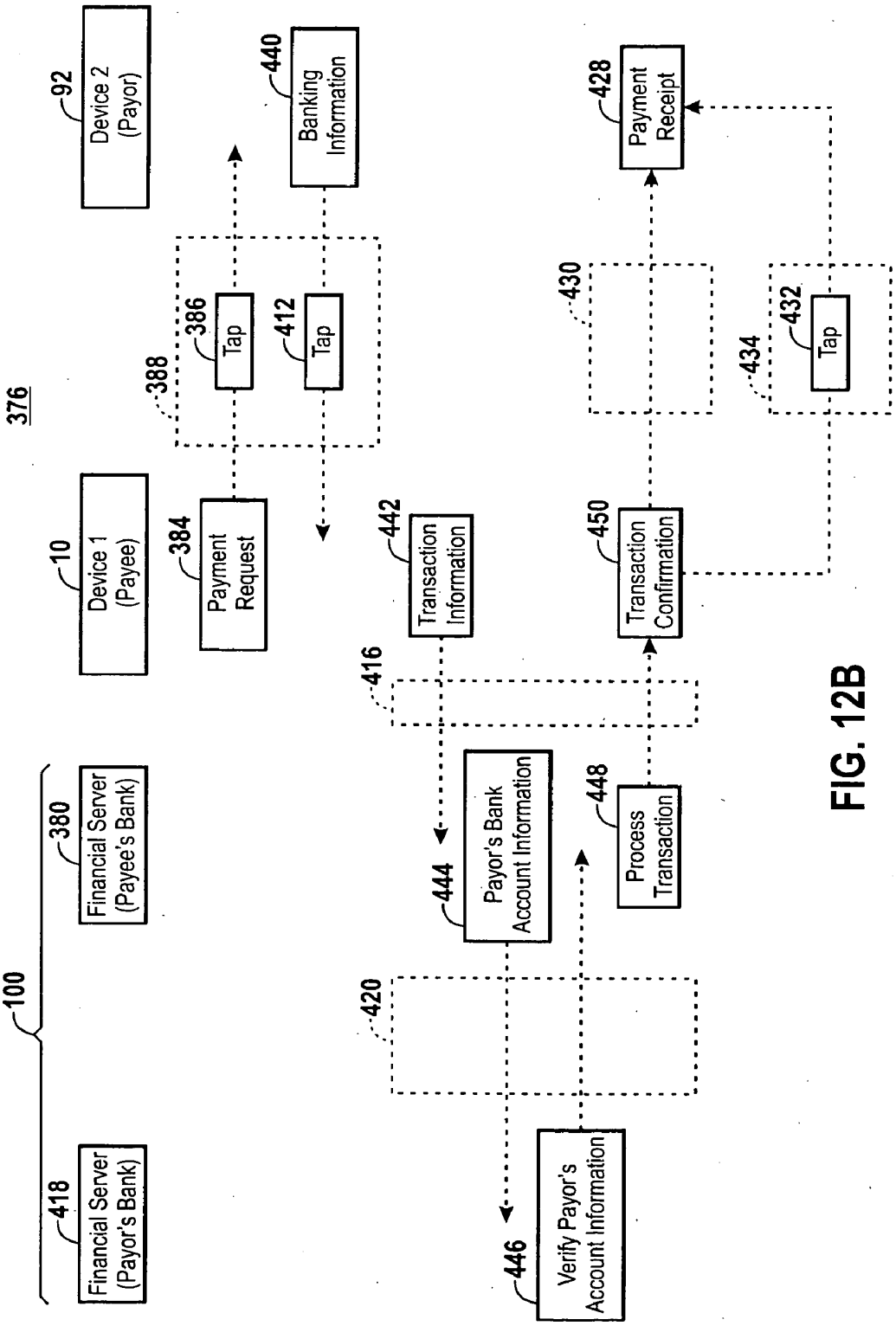
376
92
Device 2 (Payor)
10
Device 1 (Payee)
100
380
Financial Server (Payee's Bank)
418
Financial Server (Payor's Bank)
388
386
Tap
412
Tap
384
Payment Request
440
Banking Information
442
Transaction Information
416
444
Payor's Bank Account Information
420
446
Verify Payor's Account Information
448
Process Transaction
450
Transaction Confirmation
430
434
432
Tap
428
Payment Receipt

FIG. 12B

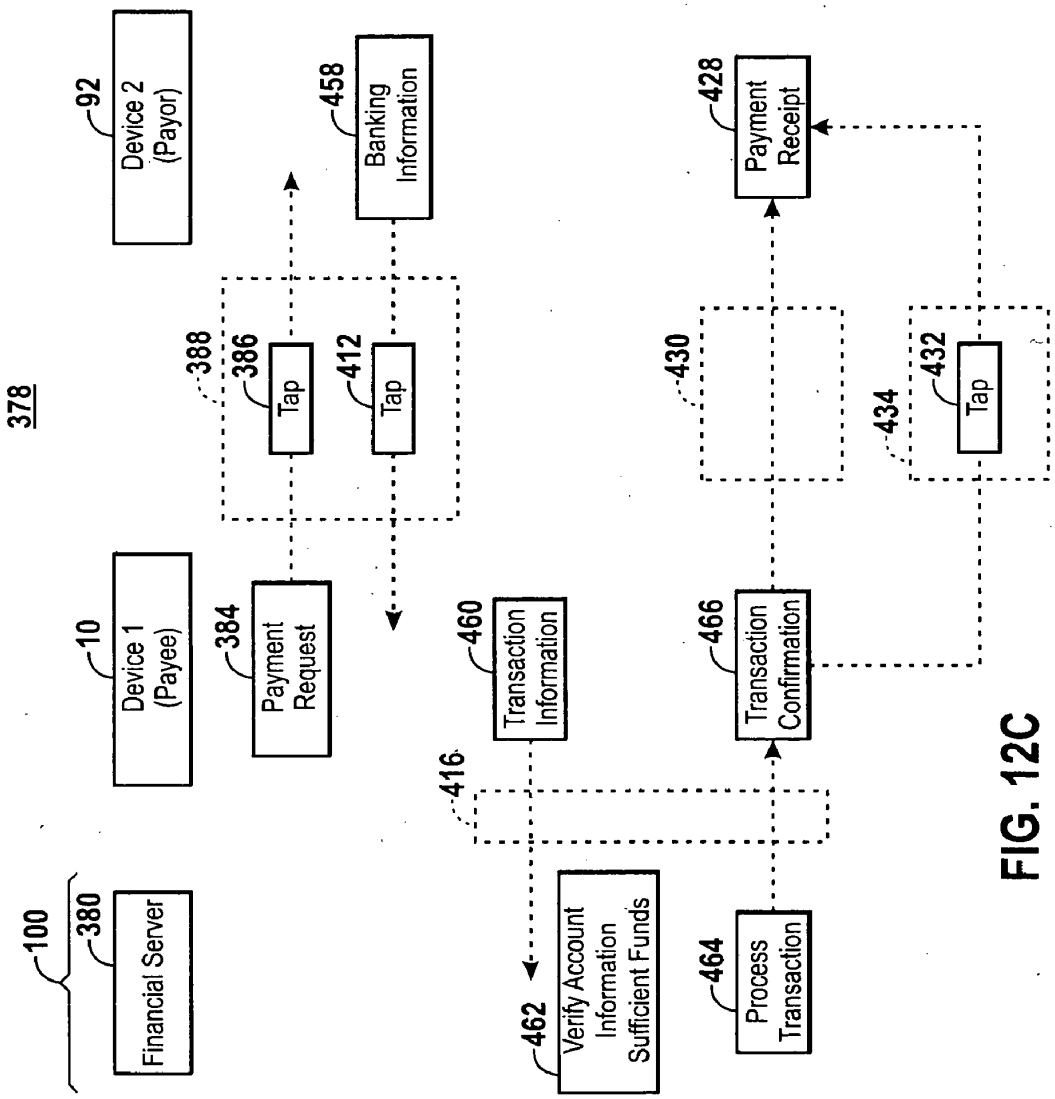
378
100
380
Financial Server
10
Device 1 (Payee)
92
Device 2 (Payor)
384
Payment Request
388
386
Tap
412
Tap
458
Banking Information
460
Transaction Information
416
462
Verify Account Information Sufficient Funds
464
Process Transaction
466
Transaction Confirmation
430
428
Payment Receipt
434
432
Tap

FIG. 12C

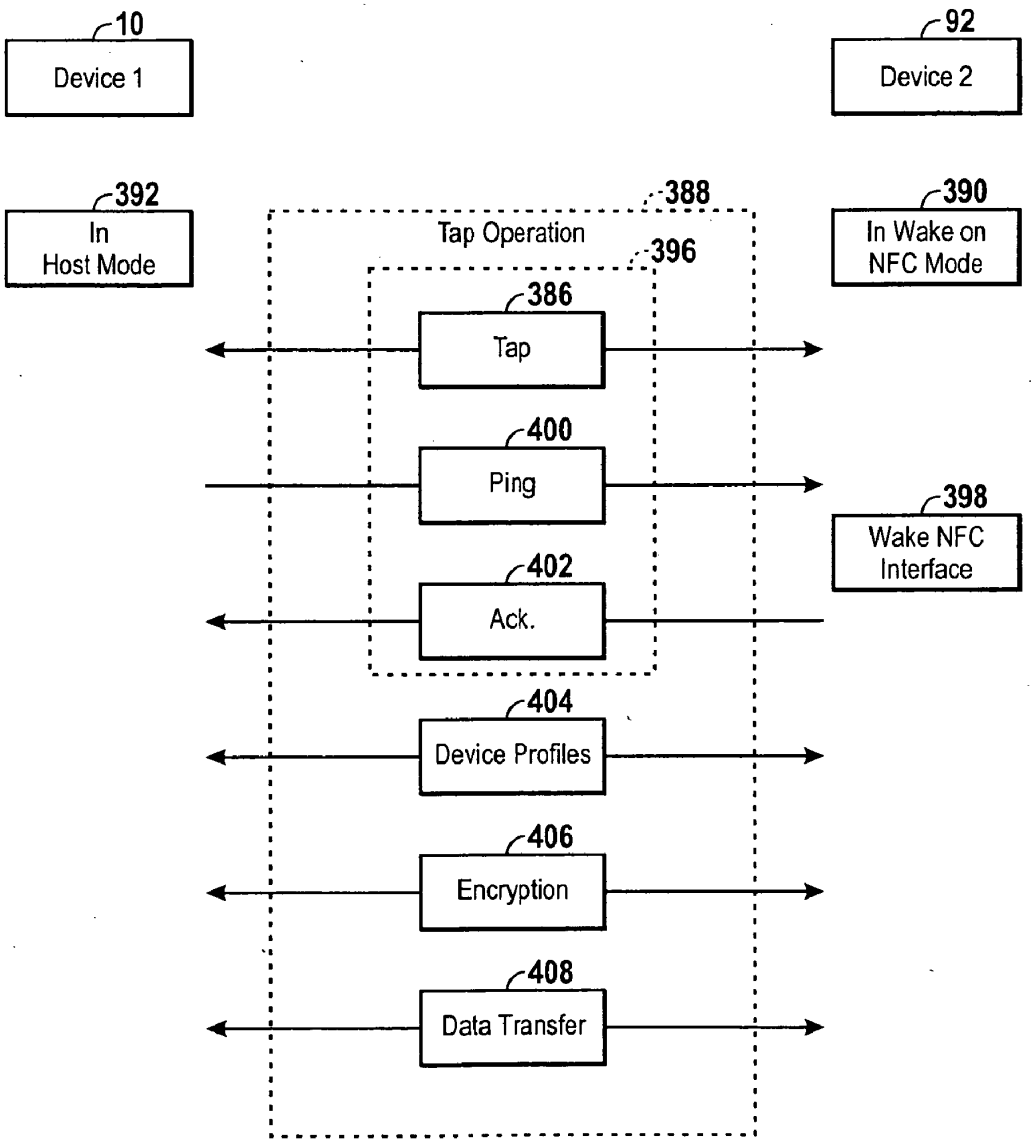
10
Device 1
92
Device 2
392
In
Host Mode
388
Tap Operation
396
390
In Wake on
NFC Mode
386
Tap
400
Ping
398
Wake NFC
Interface
402
Ack.
404
Device Profiles
406
Encryption
408
Data Transfer

FIG. 13

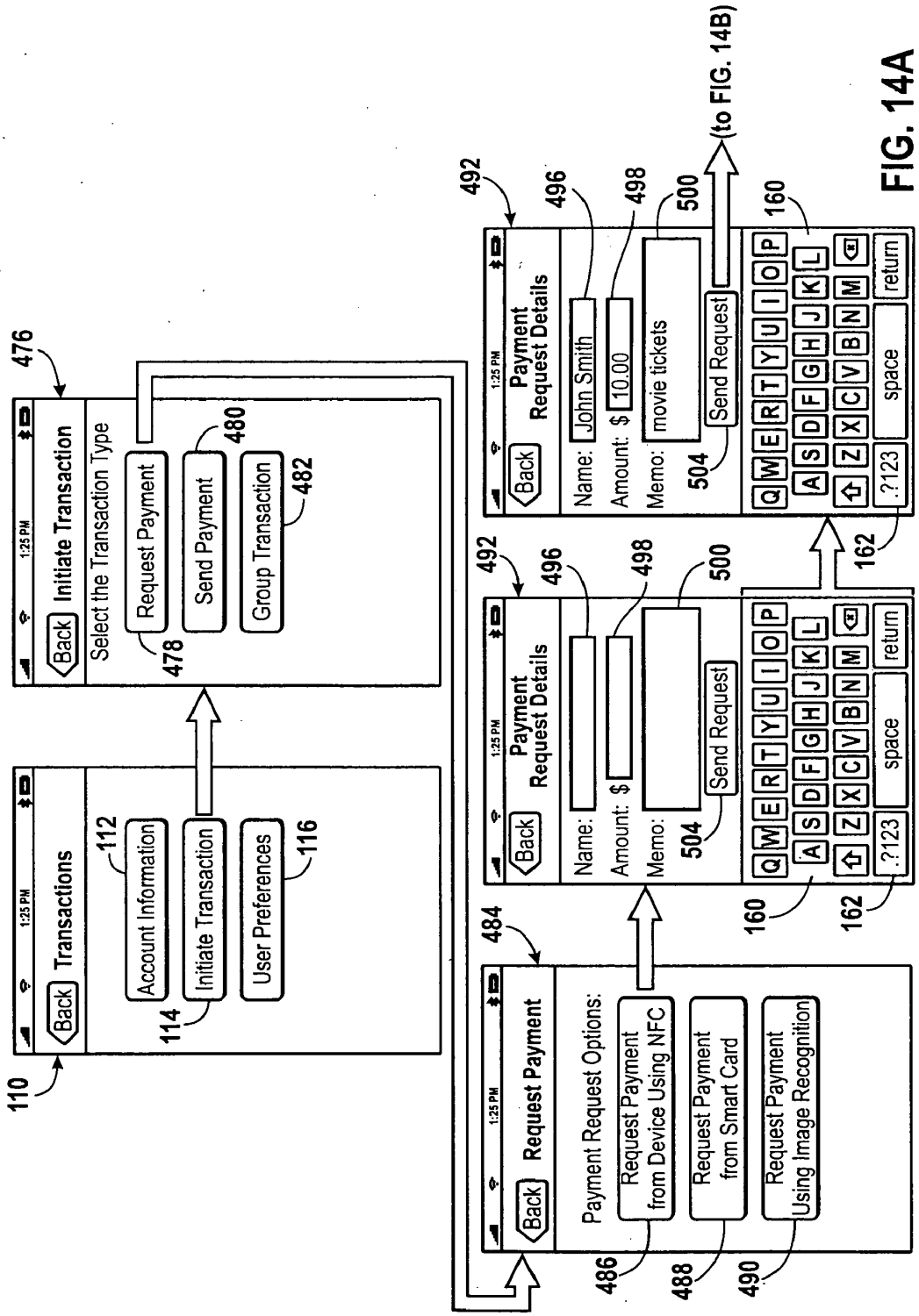
110
Back
Transactions
112
Account Information
114
Initiate Transaction
User Preferences
116
476
Back
Initiate Transaction
Select the Transaction Type
Request Payment
478
Send Payment
480
Group Transaction
482
484
Back
Request Payment
Payment Request Options:
Request Payment from Device Using NFC
486
Request Payment from Smart Card
488
Request Payment Using Image Recognition
490
492
Back
Payment Request Details
Name:
Amount: $
Memo:
496
498
500
504
Send Request
160
162
492
Back
Payment Request Details
Name: John Smith
Amount: $ 10.00
Memo: movie tickets
Send Request
(to FIG. 14B)

FIG. 14A

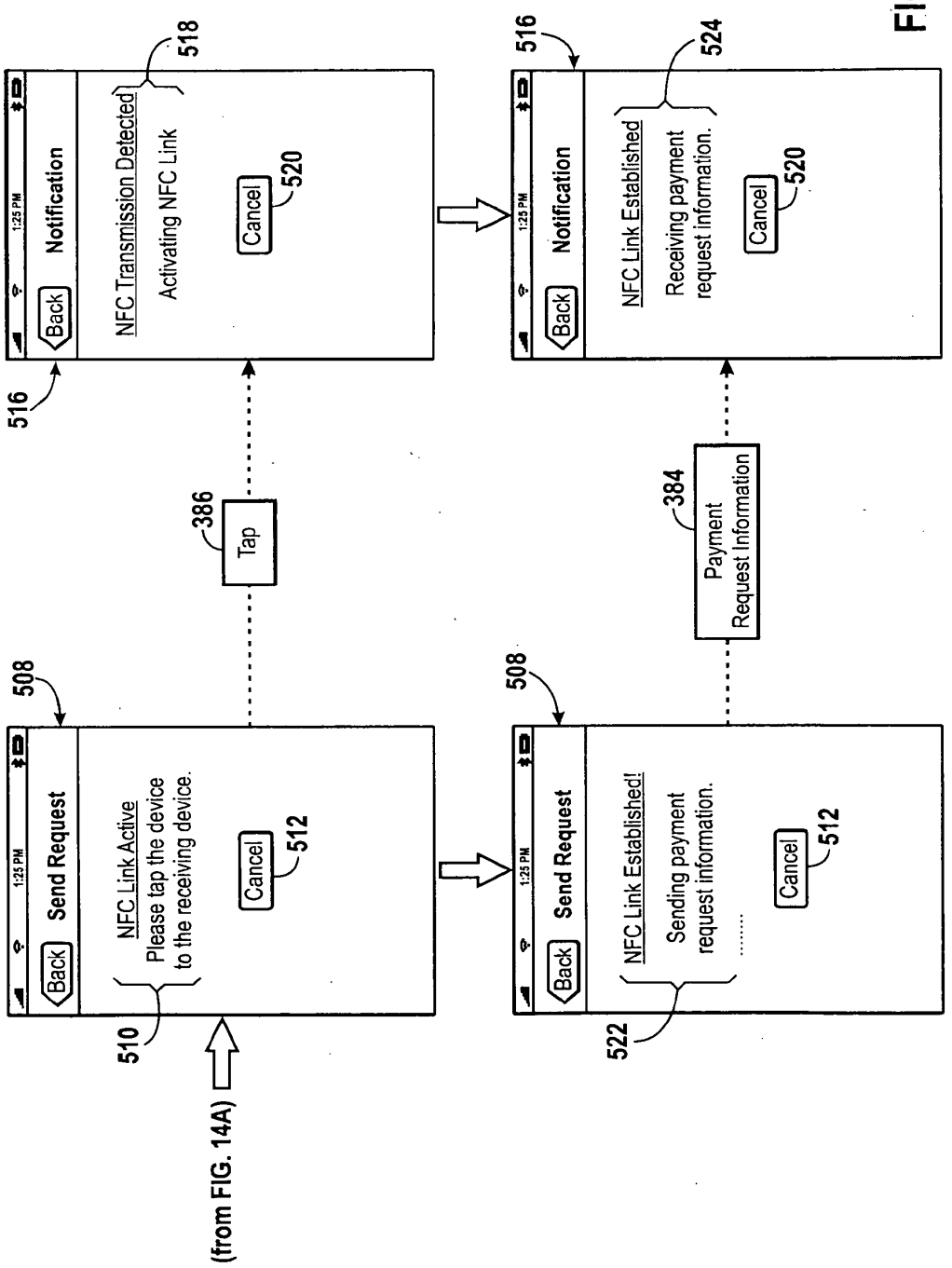
(from FIG. 14A)
508
Back
Send Request
1:25 PM
NFC Link Active
Please tap the device to the receiving device.
Cancel
510
512
386
Tap
516
Back
Notification
1:25 PM
NFC Transmission Detected
Activating NFC Link
Cancel
518
520
508
Back
Send Request
1:25 PM
NFC Link Established!
Sending payment request information.
.....
Cancel
522
512
384
Payment Request Information
516
Back
Notification
1:25 PM
NFC Link Established
Receiving payment request information.
Cancel
524
520

FIG. 14B

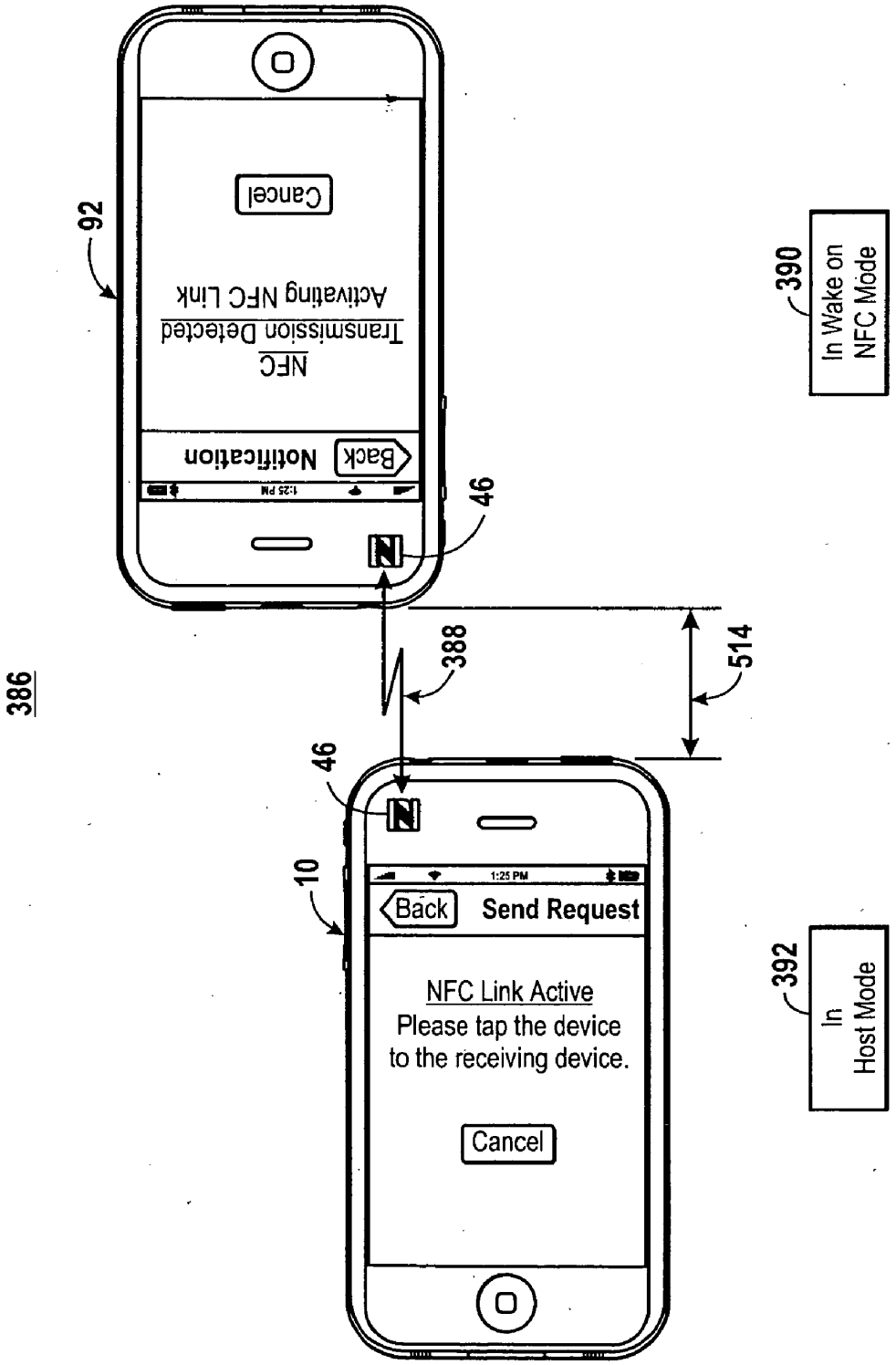
386
92
Back
Notification
NFC
Transmission Detected
Activating NFC Link
Cancel
46
388
514
46
10
Back
Send Request
NFC Link Active
Please tap the device
to the receiving device.
Cancel
390
In Wake on
NFC Mode
392
In
Host Mode

FIG. 14C

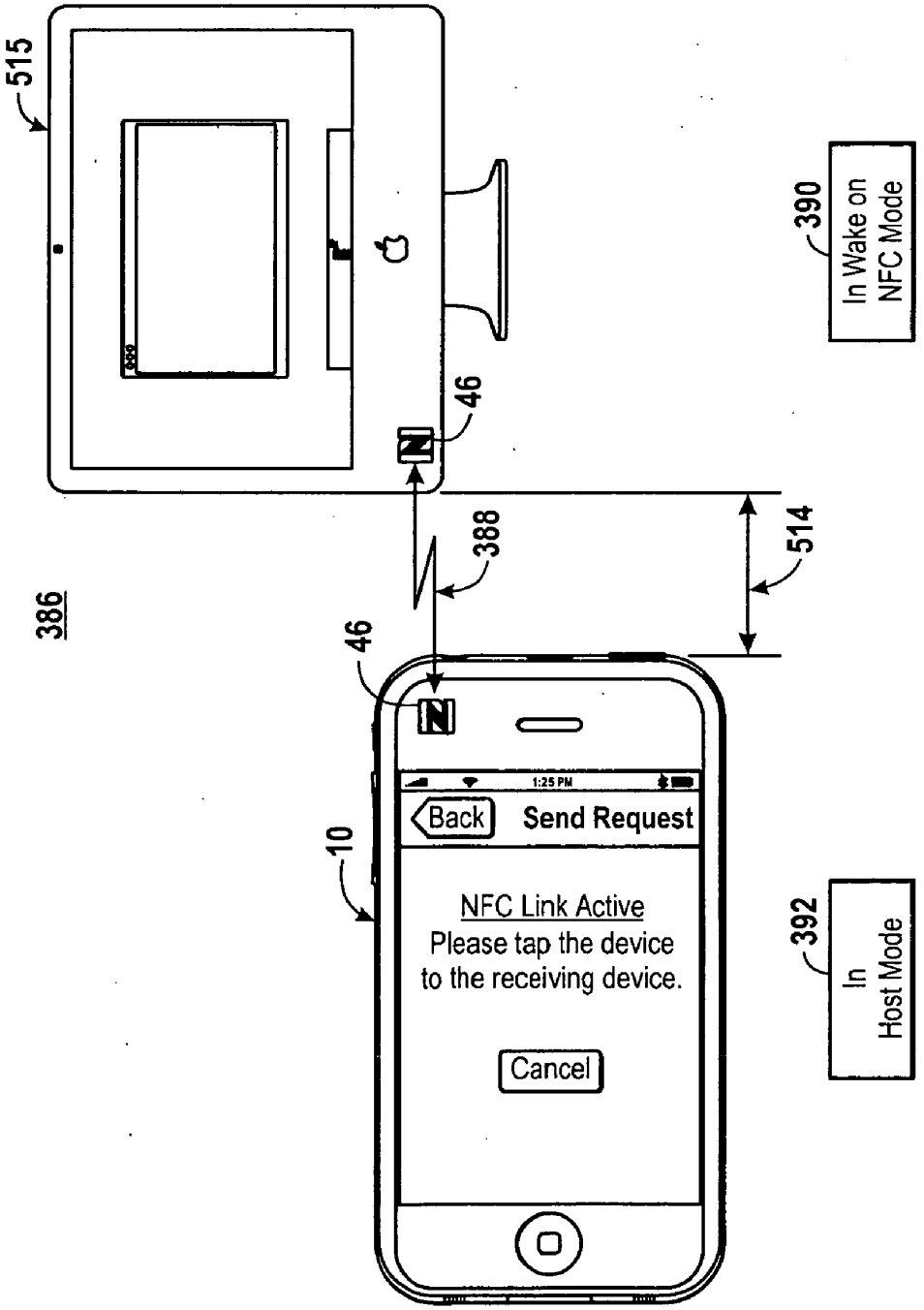
515
46
388
514
386
46
10
1:25 PM
Back
Send Request
NFC Link Active
Please tap the device
to the receiving device.
Cancel
390
In Wake on
NFC Mode
392
In
Host Mode

FIG. 14D

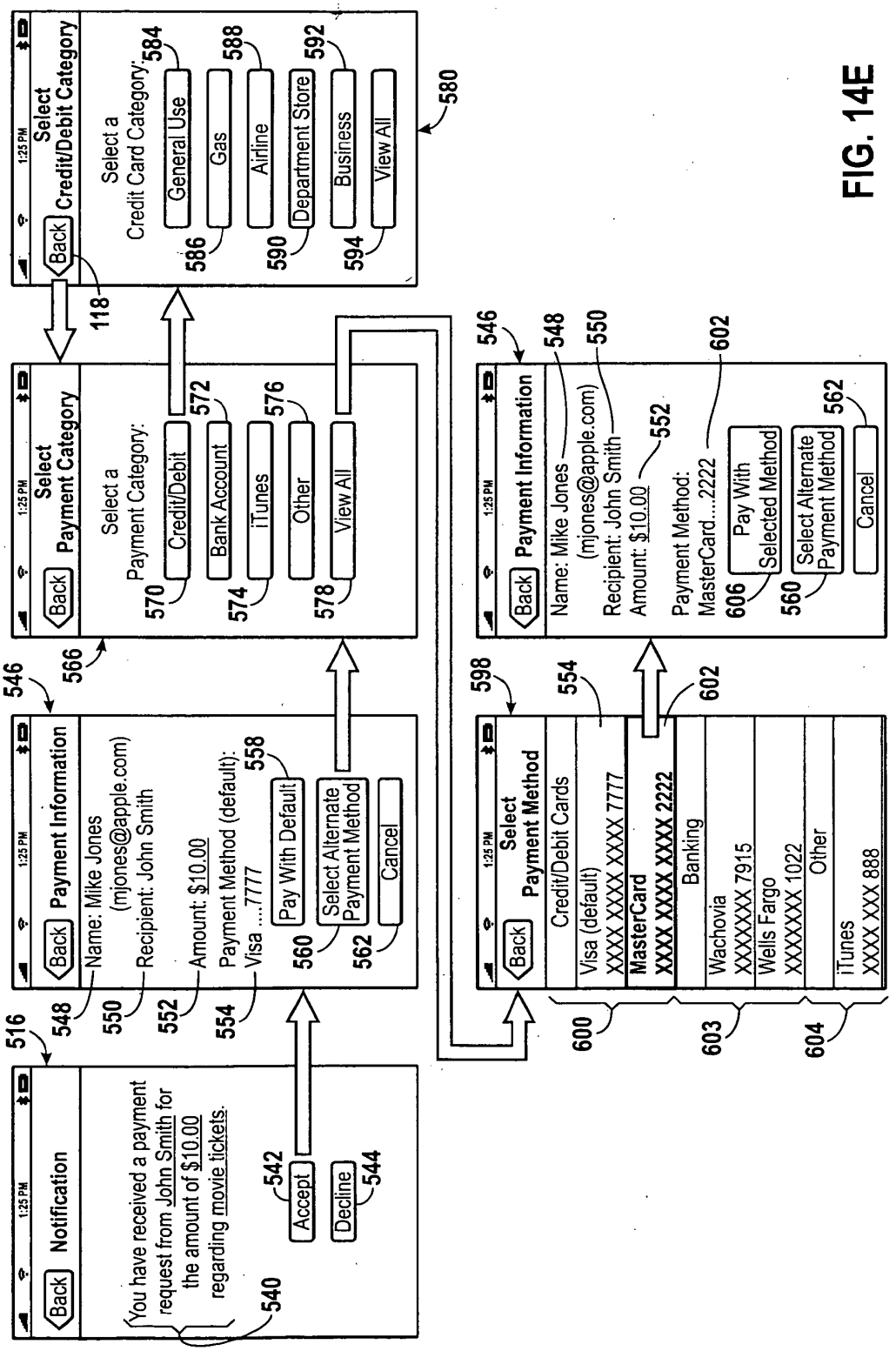
Back
Notification
You have received a payment request from John Smith for the amount of $10.00 regarding movie tickets.
Accept
Decline
Back
Payment Information
Name: Mike Jones (mjones@apple.com)
Recipient: John Smith
Amount: $10.00
Payment Method (default): Visa 7777
Pay With Default
Select Alternate Payment Method
Cancel
Back
Select Payment Category
Select a Payment Category:
Credit/Debit
Bank Account
iTunes
Other
View All
Back
Select Credit/Debit Category
Select a Credit Card Category:
General Use
Gas
Airline
Department Store
Business
View All
Back
Payment Information
Name: Mike Jones (mjones@apple.com)
Recipient: John Smith
Amount: $10.00
Payment Method: MasterCard....2222
Pay With Selected Method
Select Alternate Payment Method
Cancel
Back
Select Payment Method
Credit/Debit Cards
Visa (default)
XXXX XXXX XXXX 7777
MasterCard
XXXX XXXX XXXX 2222
Banking
Wachovia
XXXXXXX 7915
Wells Fargo
XXXXXXX 1022
Other
iTunes
XXXX XXX 888

FIG. 14E

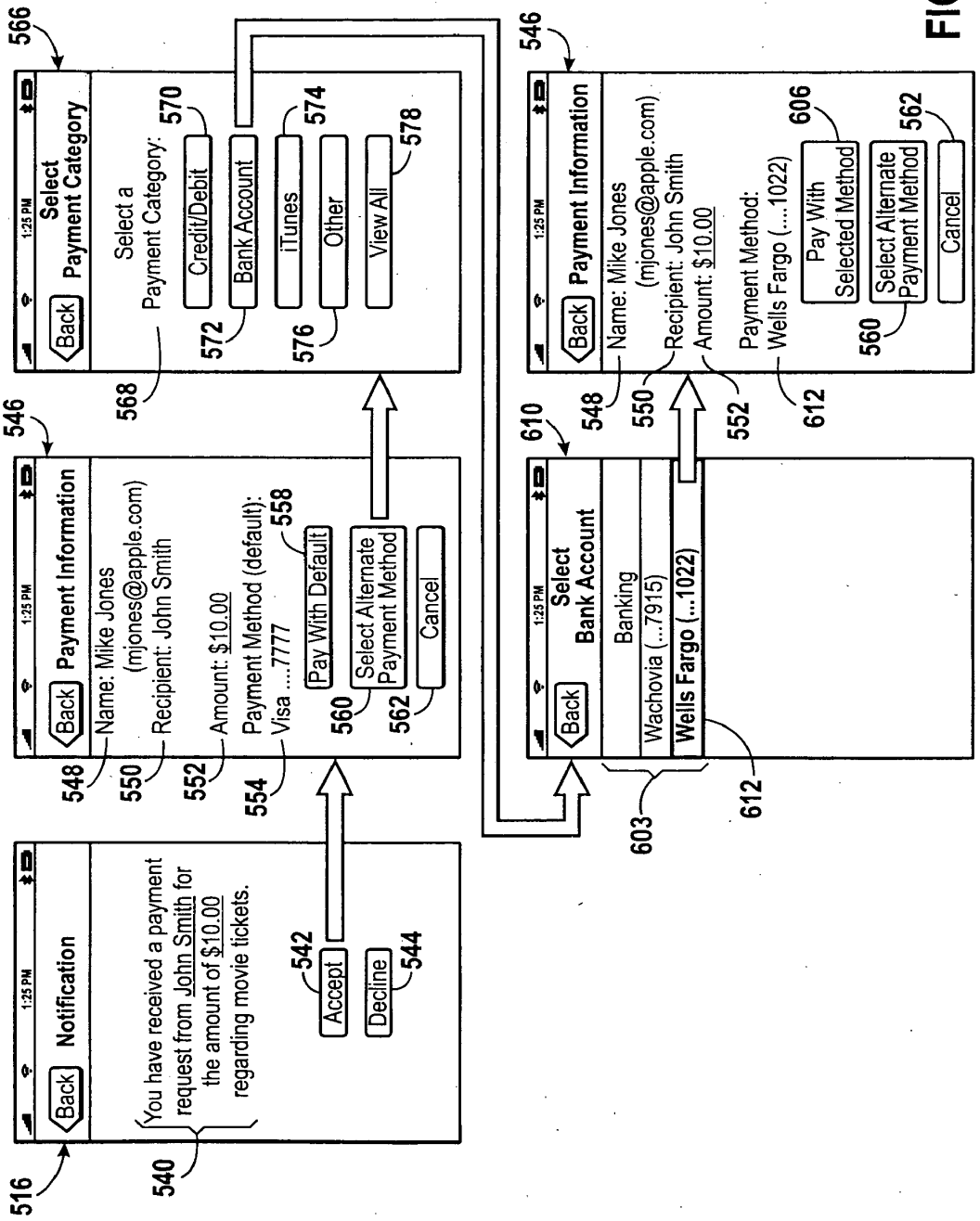
516
Back
Notification
1:25 PM
You have received a payment request from John Smith for the amount of $10.00 regarding movie tickets.
540
Accept
542
Decline
544
546
Back
Payment Information
Name: Mike Jones (mjones@apple.com)
Recipient: John Smith
Amount: $10.00
Payment Method (default): Visa 7777
548
550
552
554
Pay With Default
558
Select Alternate Payment Method
560
Cancel
562
566
Back
Select Payment Category
Select a Payment Category:
568
Credit/Debit
570
Bank Account
572
iTunes
574
Other
576
View All
578
610
Back
Select Bank Account
Banking
Wachovia (...7915)
Wells Fargo (...1022)
603
612
546
Back
Payment Information
Name: Mike Jones (mjones@apple.com)
Recipient: John Smith
Amount: $10.00
Payment Method: Wells Fargo (....1022)
548
550
552
612
Pay With Selected Method
606
Select Alternate Payment Method
560
Cancel
562

FIG. 14F

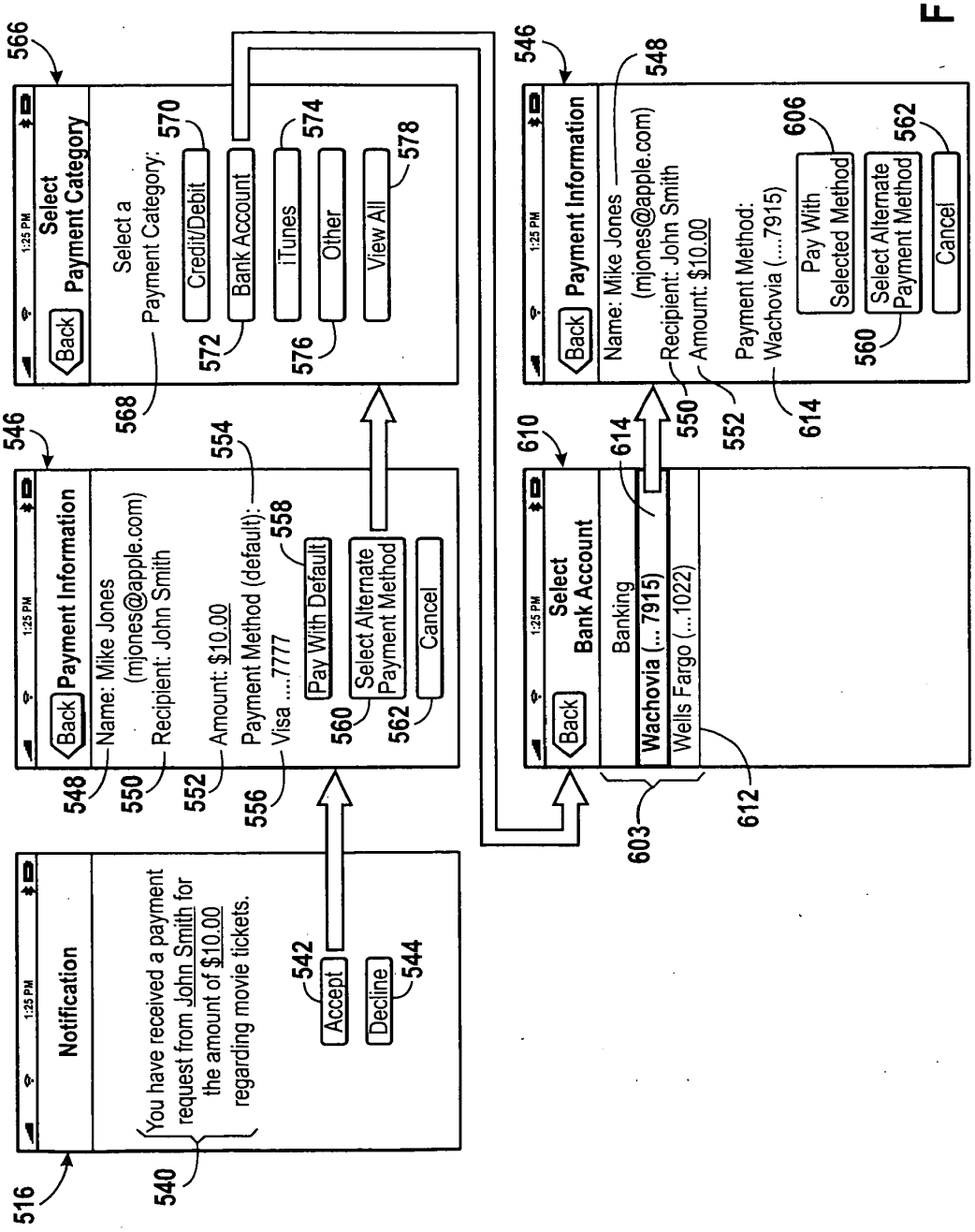
Notification
You have received a payment request from John Smith for the amount of $10.00 regarding movie tickets.
Accept
Decline
Back
Payment Information
Name: Mike Jones
(mjones@apple.com)
Recipient: John Smith
Amount: $10.00
Payment Method (default):
Visa 7777
Pay With Default
Select Alternate Payment Method
Cancel
Select Payment Category
Select a Payment Category:
Credit/Debit
Bank Account
iTunes
Other
View All
Select Bank Account
Banking
Wachovia (... 7915)
Wells Fargo (...1022)
Payment Method:
Wachovia (....7915)
Pay With Selected Method
516
540
542
544
546
548
550
552
554
556
558
560
562
566
568
570
572
574
576
578
603
606
610
612
614

FIG. 14G

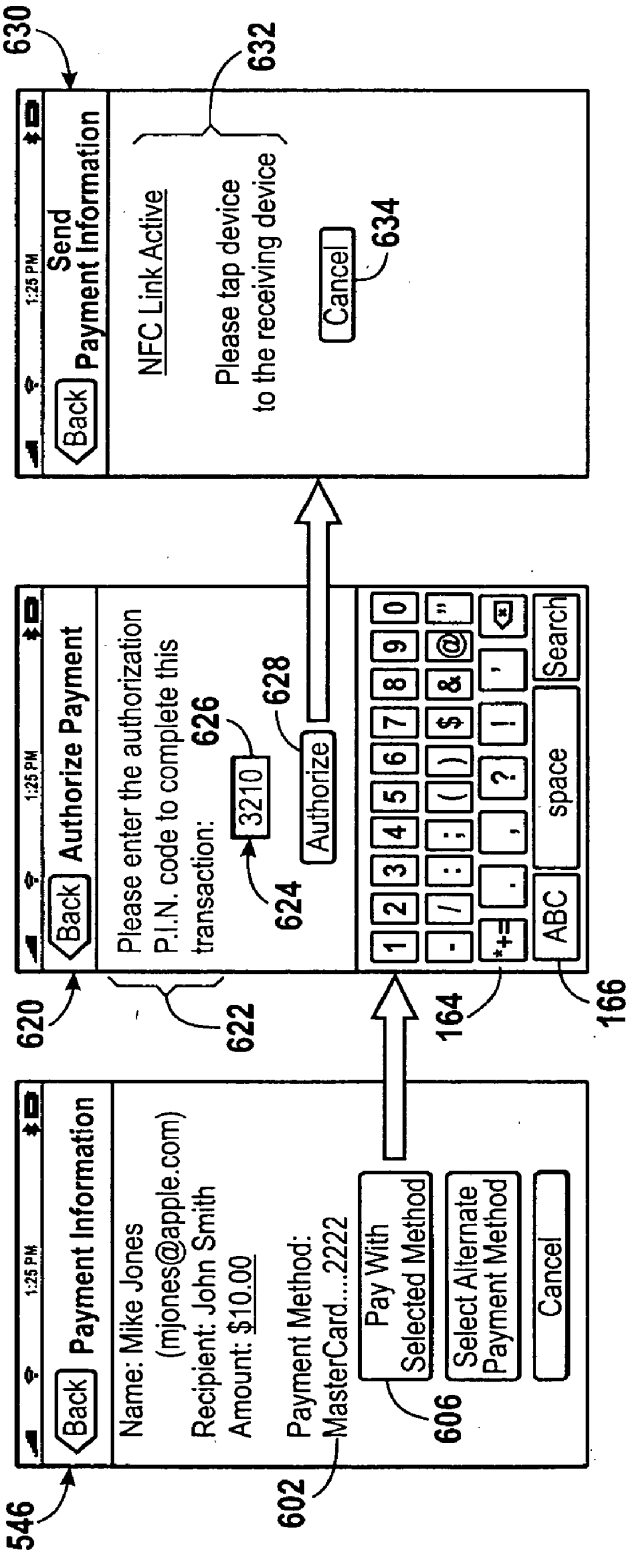
546
Back
Payment Information
1:25 PM
Name: Mike Jones
(mjones@apple.com)
Recipient: John Smith
Amount: $10.00
Payment Method:
MasterCard....2222
602
Pay With Selected Method
606
Select Alternate Payment Method
Cancel
620
Back
Authorize Payment
1:25 PM
Please enter the authorization P.I.N. code to complete this transaction:
622
3210
626
624
Authorize
628
1 2 3 4 5 6 7 8 9 0
- / : ; ( ) $ & @ "
*+= . , ? ! '
ABC
space
Search
164
166
630
Back
Send Payment Information
1:25 PM
NFC Link Active
632
Please tap device to the receiving device
Cancel
634

FIG. 14H

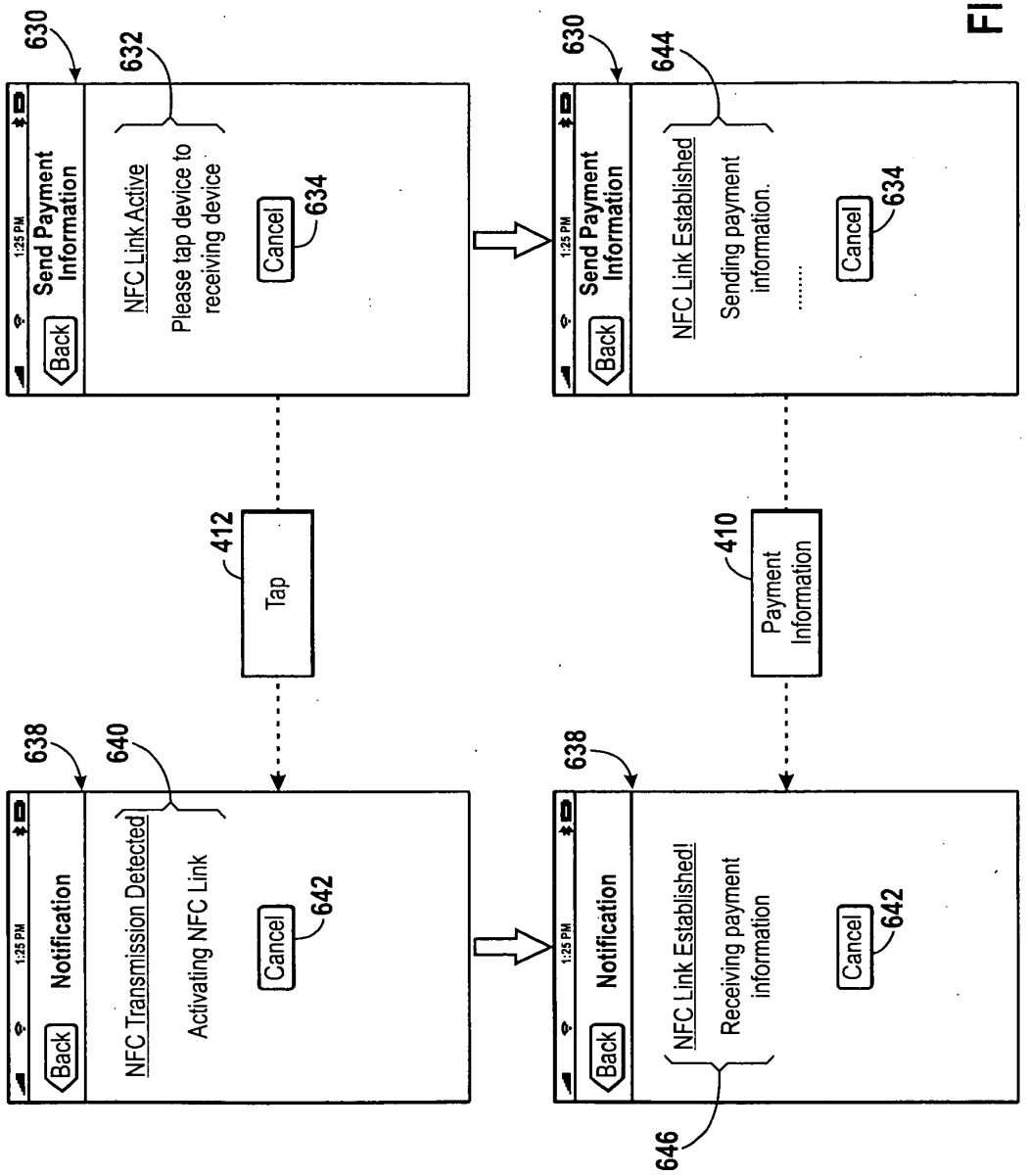
630
632
Send Payment Information
Back
1:25 PM
NFC Link Active
Please tap device to receiving device
Cancel
634
630
644
Send Payment Information
Back
1:25 PM
NFC Link Established
Sending payment information.
.....
Cancel
634
412
Tap
410
Payment Information
638
640
Notification
Back
1:25 PM
NFC Transmission Detected
Activating NFC Link
Cancel
642
638
Notification
Back
1:25 PM
NFC Link Established!
Receiving payment information
Cancel
642
646

FIG. 14I

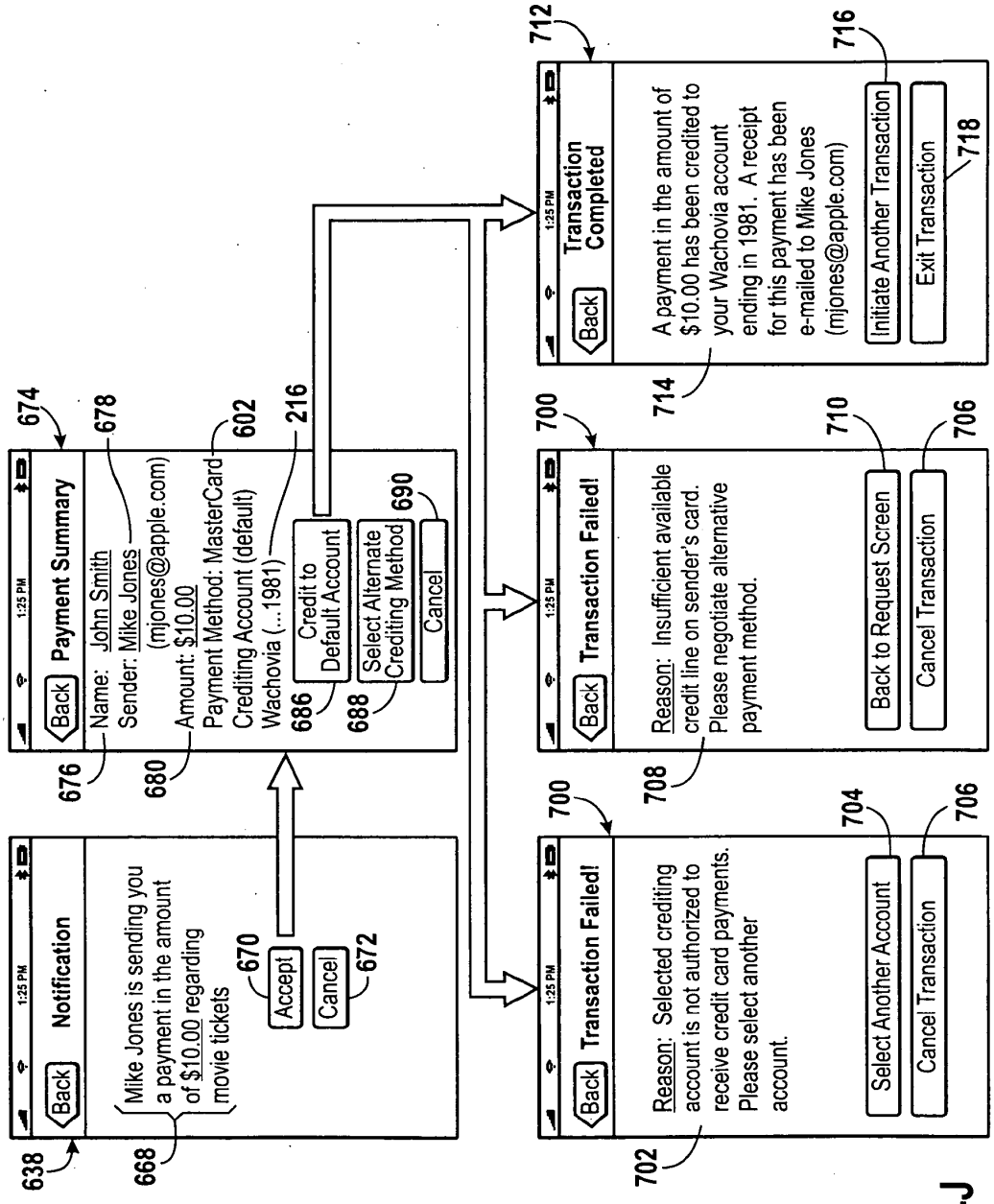
638
Back
Notification
1:25 PM
Mike Jones is sending you a payment in the amount of $10.00 regarding movie tickets
668
Accept
Cancel
670
672
674
Back
Payment Summary
1:25 PM
Name: John Smith
Sender: Mike Jones
(mjones@apple.com)
Amount: $10.00
Payment Method: MasterCard
Crediting Account (default)
Wachovia (...1981)
676
678
680
602
216
Credit to Default Account
Select Alternate Crediting Method
Cancel
686
688
690
700
Back
Transaction Failed!
1:25 PM
Reason: Selected crediting account is not authorized to receive credit card payments. Please select another account.
Select Another Account
Cancel Transaction
702
704
706
700
Back
Transaction Failed!
1:25 PM
Reason: Insufficient available credit line on sender's card. Please negotiate alternative payment method.
Back to Request Screen
Cancel Transaction
708
710
706
712
Back
Transaction Completed
1:25 PM
A payment in the amount of $10.00 has been credited to your Wachovia account ending in 1981. A receipt for this payment has been e-mailed to Mike Jones (mjones@apple.com)
Initiate Another Transaction
Exit Transaction
714
716
718

FIG. 14J

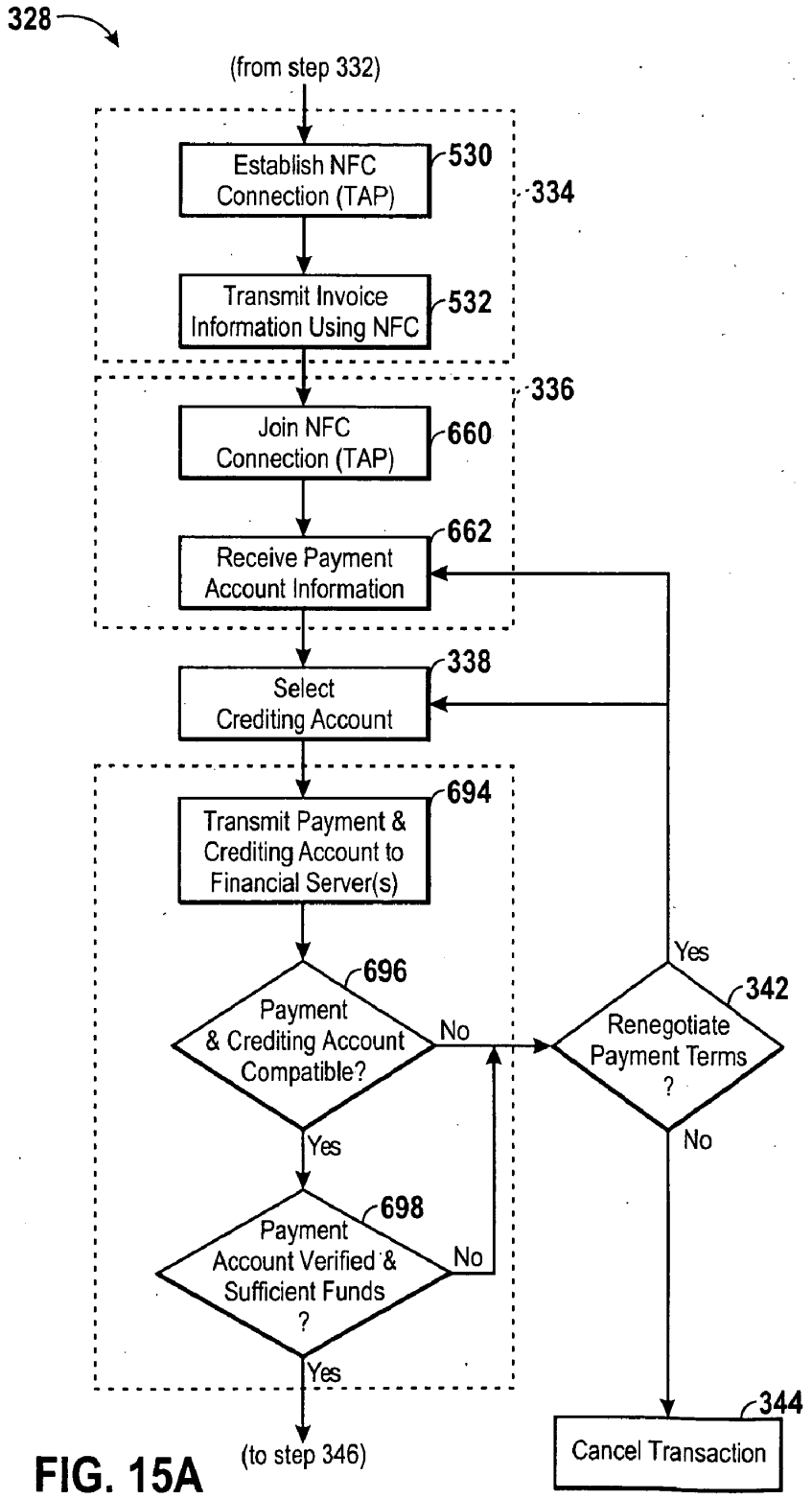
328
(from step 332)
Establish NFC Connection (TAP)
530
334
Transmit Invoice Information Using NFC
532
336
Join NFC Connection (TAP)
660
Receive Payment Account Information
662
Select Crediting Account
338
Transmit Payment & Crediting Account to Financial Server(s)
694
Payment & Crediting Account Compatible?
696
No
Yes
Renegotiate Payment Terms ?
342
Yes
No
Payment Account Verified & Sufficient Funds ?
698
No
Yes
(to step 346)
Cancel Transaction
344

FIG. 15A

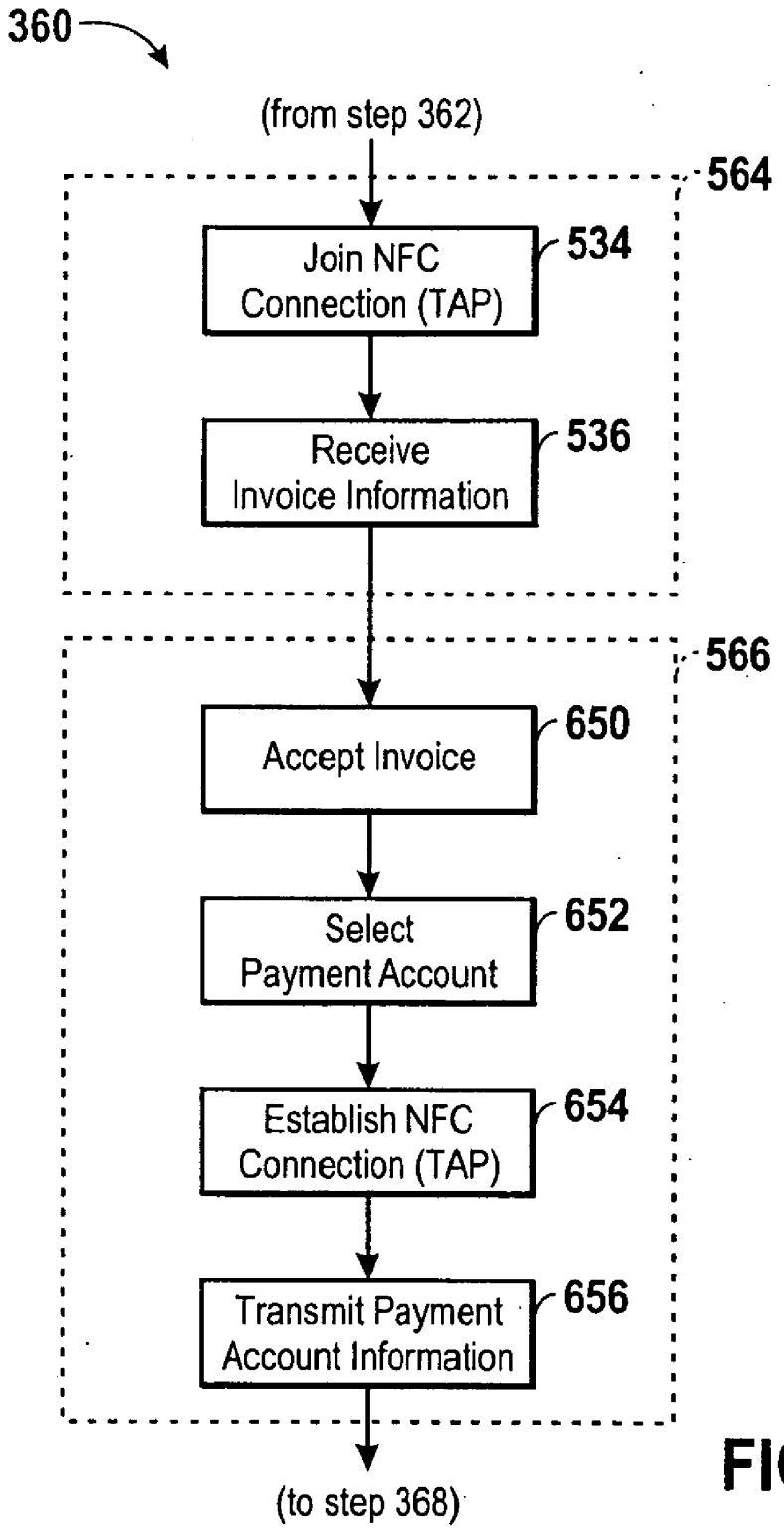
360
(from step 362)
564
Join NFC Connection (TAP)
534
Receive Invoice Information
536
566
Accept Invoice
650
Select Payment Account
652
Establish NFC Connection (TAP)
654
Transmit Payment Account Information
656
(to step 368)

FIG. 15B

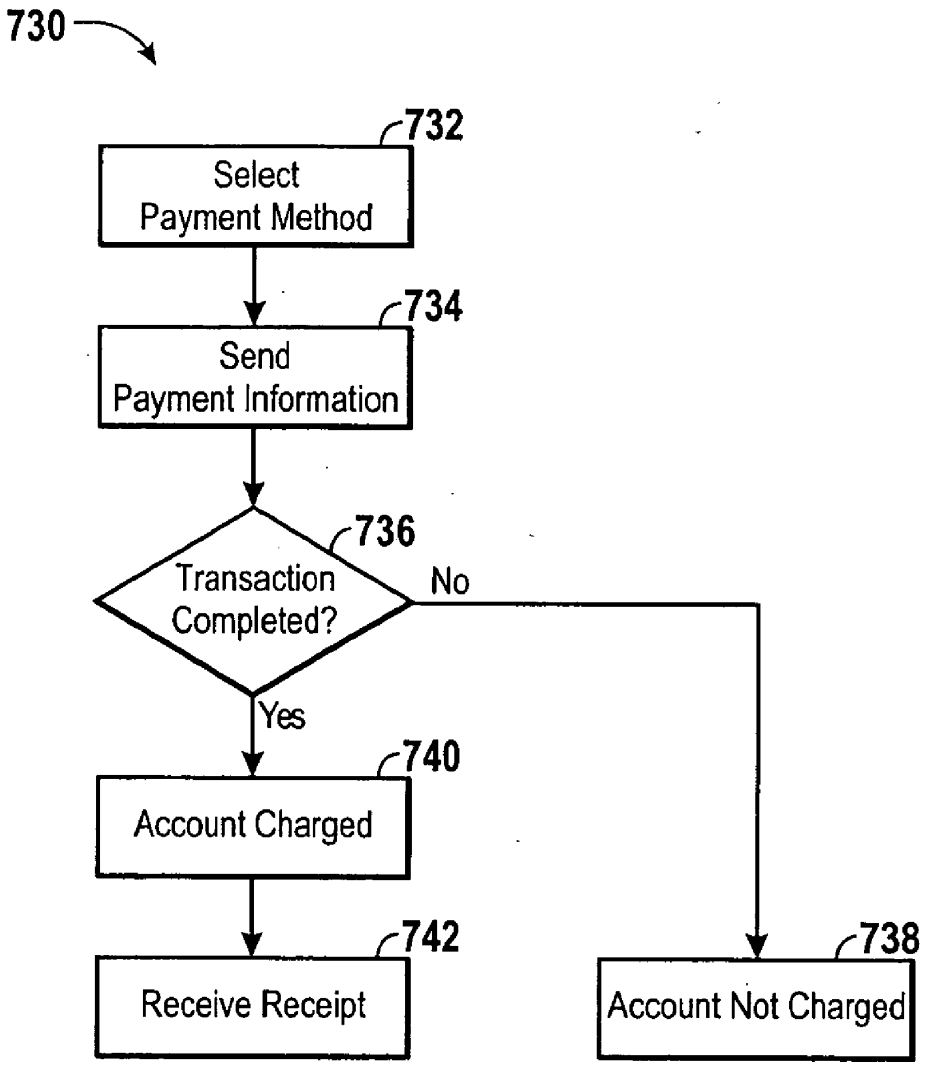
730
732
Select Payment Method
734
Send Payment Information
736
Transaction Completed?
No
Yes
740
Account Charged
742
Receive Receipt
738
Account Not Charged

FIG. 16A

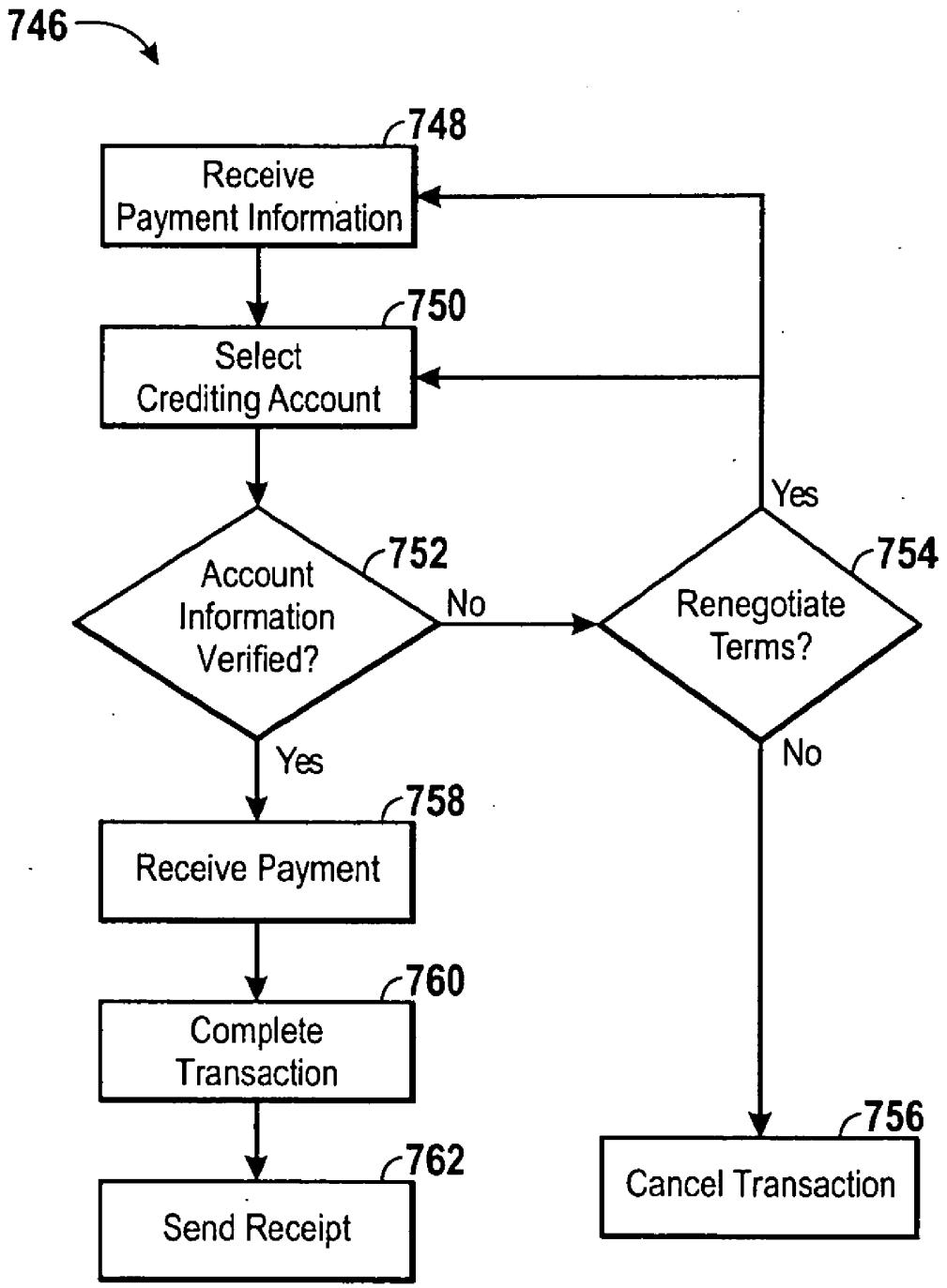
746
748
Receive Payment Information
750
Select Crediting Account
752
Account Information Verified?
No
754
Renegotiate Terms?
Yes
No
Yes
758
Receive Payment
760
Complete Transaction
762
Send Receipt
756
Cancel Transaction

FIG. 16B

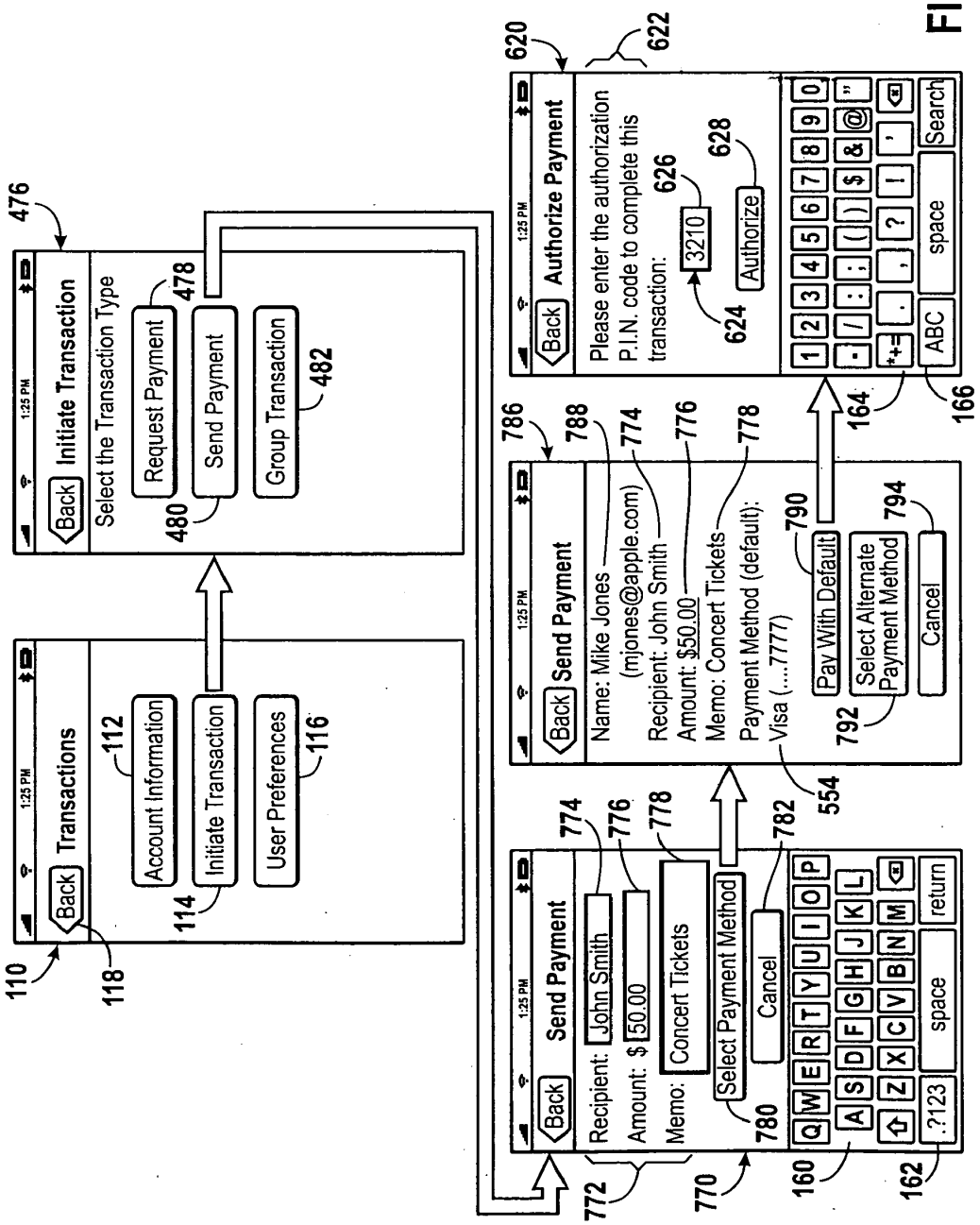
Back
Transactions
Account Information
Initiate Transaction
User Preferences
Back
Initiate Transaction
Select the Transaction Type
Request Payment
Send Payment
Group Transaction
Back
Send Payment
Recipient: John Smith
Amount: $ 50.00
Memo: Concert Tickets
Select Payment Method
Cancel
Back
Send Payment
Name: Mike Jones
(mjones@apple.com)
Recipient: John Smith
Amount: $50.00
Memo: Concert Tickets
Payment Method (default):
Visa (....7777)
Pay With Default
Select Alternate Payment Method
Cancel
Back
Authorize Payment
Please enter the authorization P.I.N. code to complete this transaction:
3210
Authorize
ABC
space
Search
110
112
114
116
118
476
478
480
482
620
622
624
626
628
160
162
164
166
770
772
774
776
778
780
782
786
788
790
792
794
554

FIG. 17A

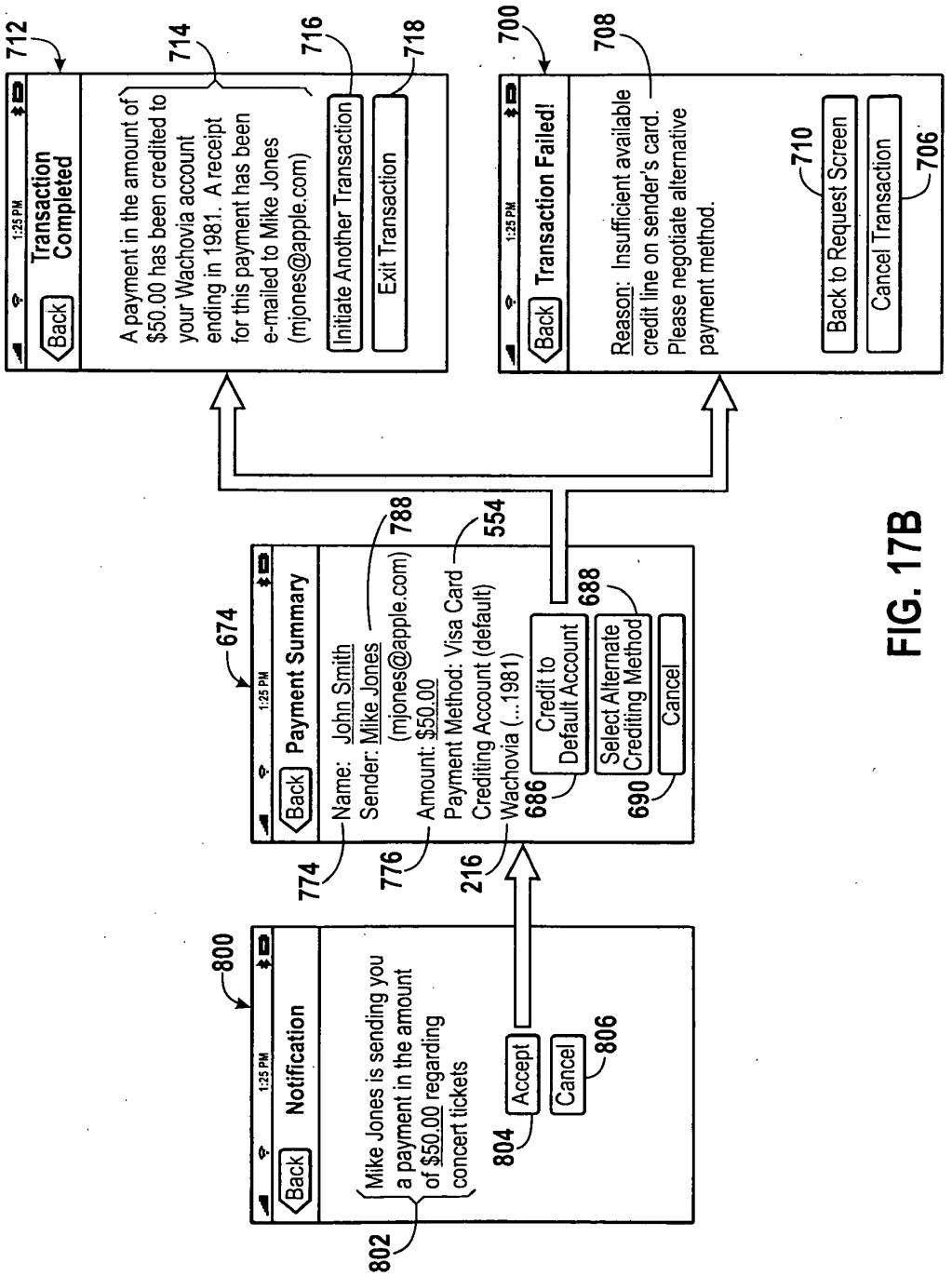
712
1:25 PM
Back
Transaction Completed
A payment in the amount of $50.00 has been credited to your Wachovia account ending in 1981. A receipt for this payment has been e-mailed to Mike Jones (mjones@apple.com)
714
716
Initiate Another Transaction
718
Exit Transaction
700
1:25 PM
Back
Transaction Failed!
708
Reason: Insufficient available credit line on sender's card. Please negotiate alternative payment method.
710
Back to Request Screen
Cancel Transaction
706
674
1:25 PM
Back
Payment Summary
Name: John Smith
Sender: Mike Jones
(mjones@apple.com)
788
Amount: $50.00
Payment Method: Visa Card
Crediting Account (default)
Wachovia (...1981)
554
686
Credit to Default Account
688
Select Alternate Crediting Method
690
Cancel
774
776
216
800
1:25 PM
Back
Notification
Mike Jones is sending you a payment in the amount of $50.00 regarding concert tickets
802
Accept
804
Cancel
806

FIG. 17B

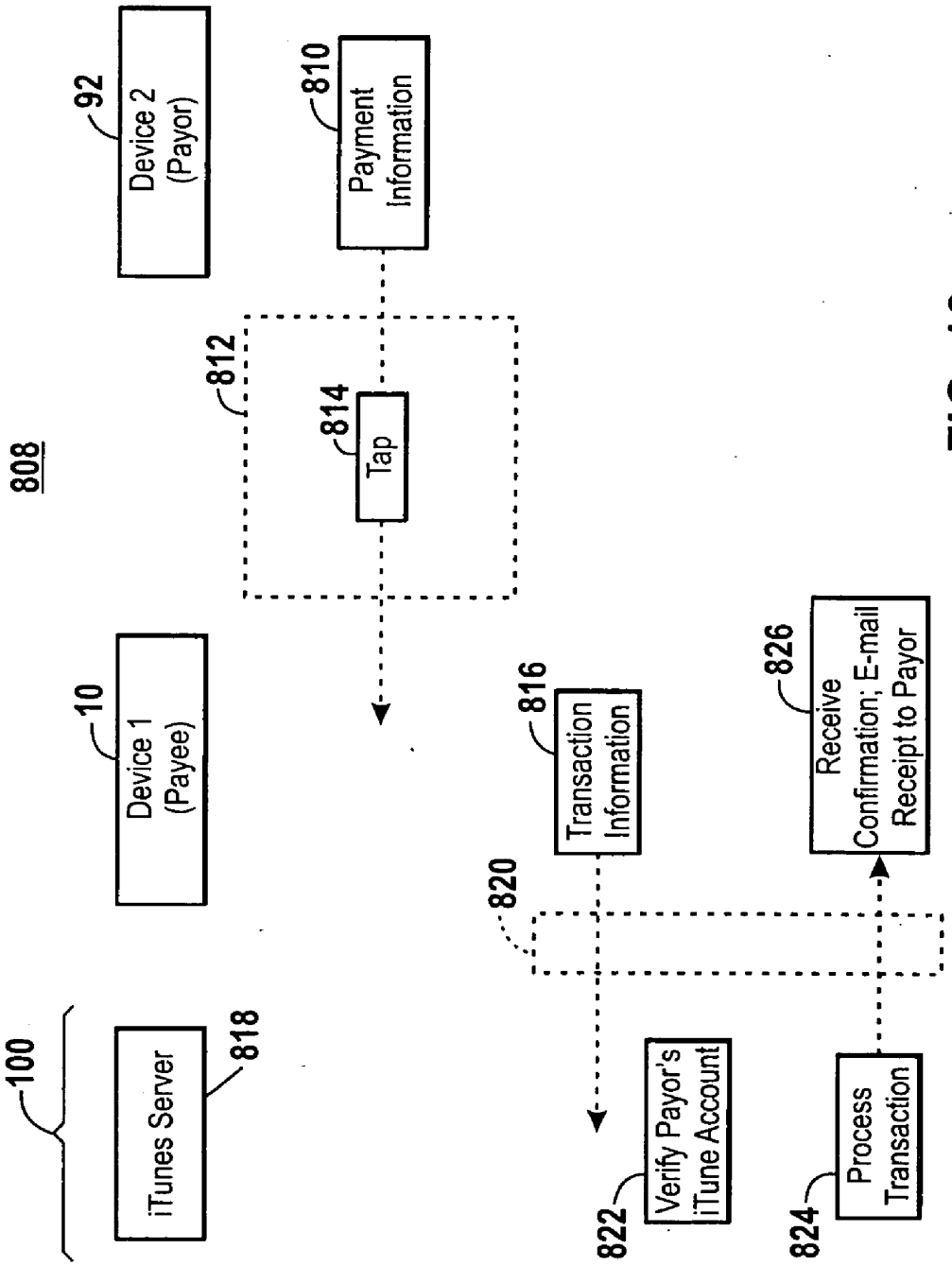
808
92
Device 2 (Payor)
10
Device 1 (Payee)
100
iTunes Server
818
810
Payment Information
812
814
Tap
816
Transaction Information
820
822
Verify Payor's iTune Account
824
Process Transaction
826
Receive Confirmation; E-mail Receipt to Payor

FIG. 18

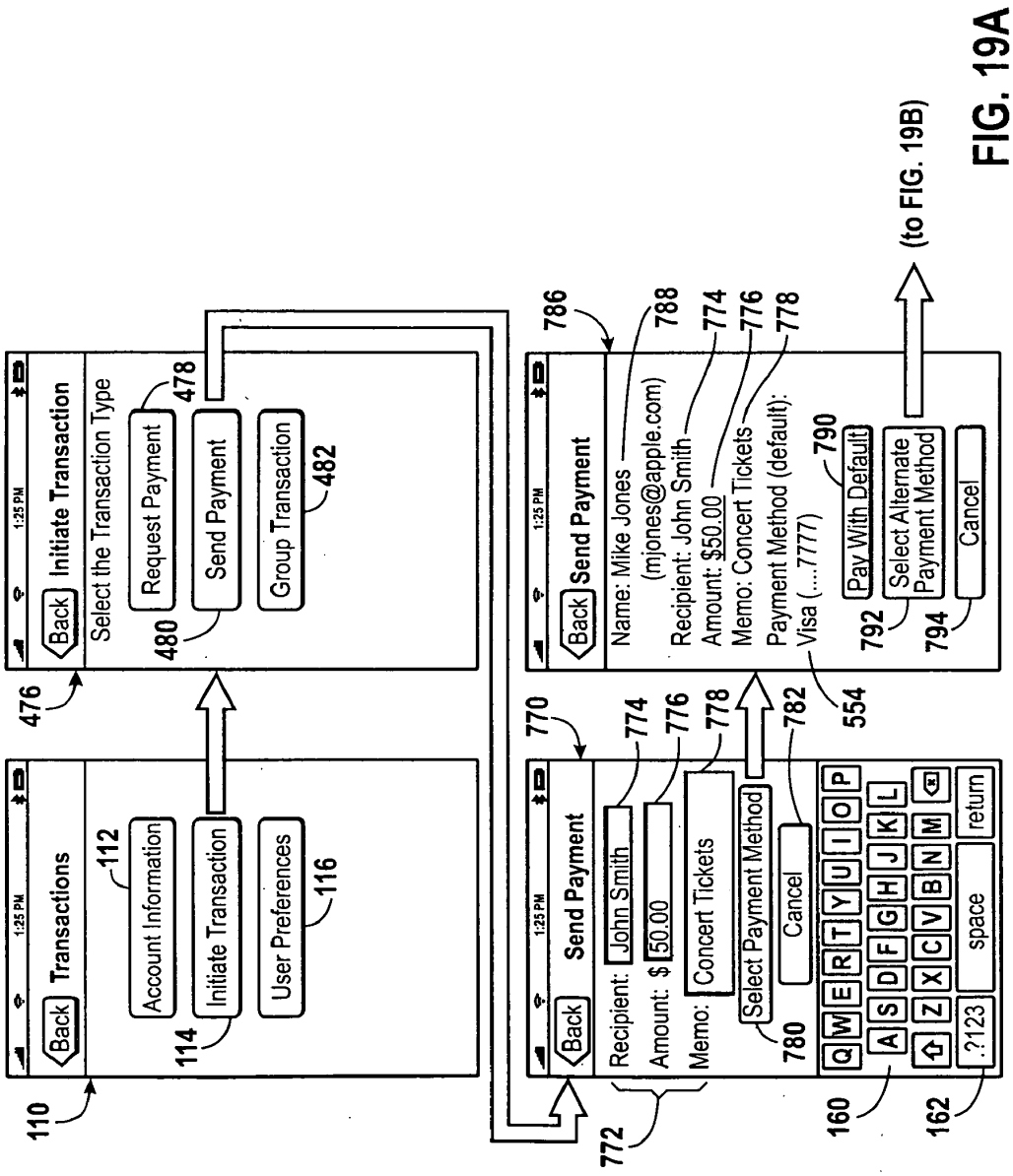
1:25 PM
Back
Transactions
Account Information
Initiate Transaction
User Preferences
110
112
114
116
Back
Initiate Transaction
Select the Transaction Type
Request Payment
Send Payment
Group Transaction
476
478
480
482
Back
Send Payment
Recipient: John Smith
Amount: $ 50.00
Memo: Concert Tickets
Select Payment Method
Cancel
770
772
774
776
778
780
782
160
162
Back
Send Payment
Name: Mike Jones
(mjones@apple.com)
Recipient: John Smith
Amount: $50.00
Memo: Concert Tickets
Payment Method (default):
Visa (....7777)
Pay With Default
Select Alternate Payment Method
Cancel
786
788
790
792
794
554
(to FIG. 19B)

FIG. 19A

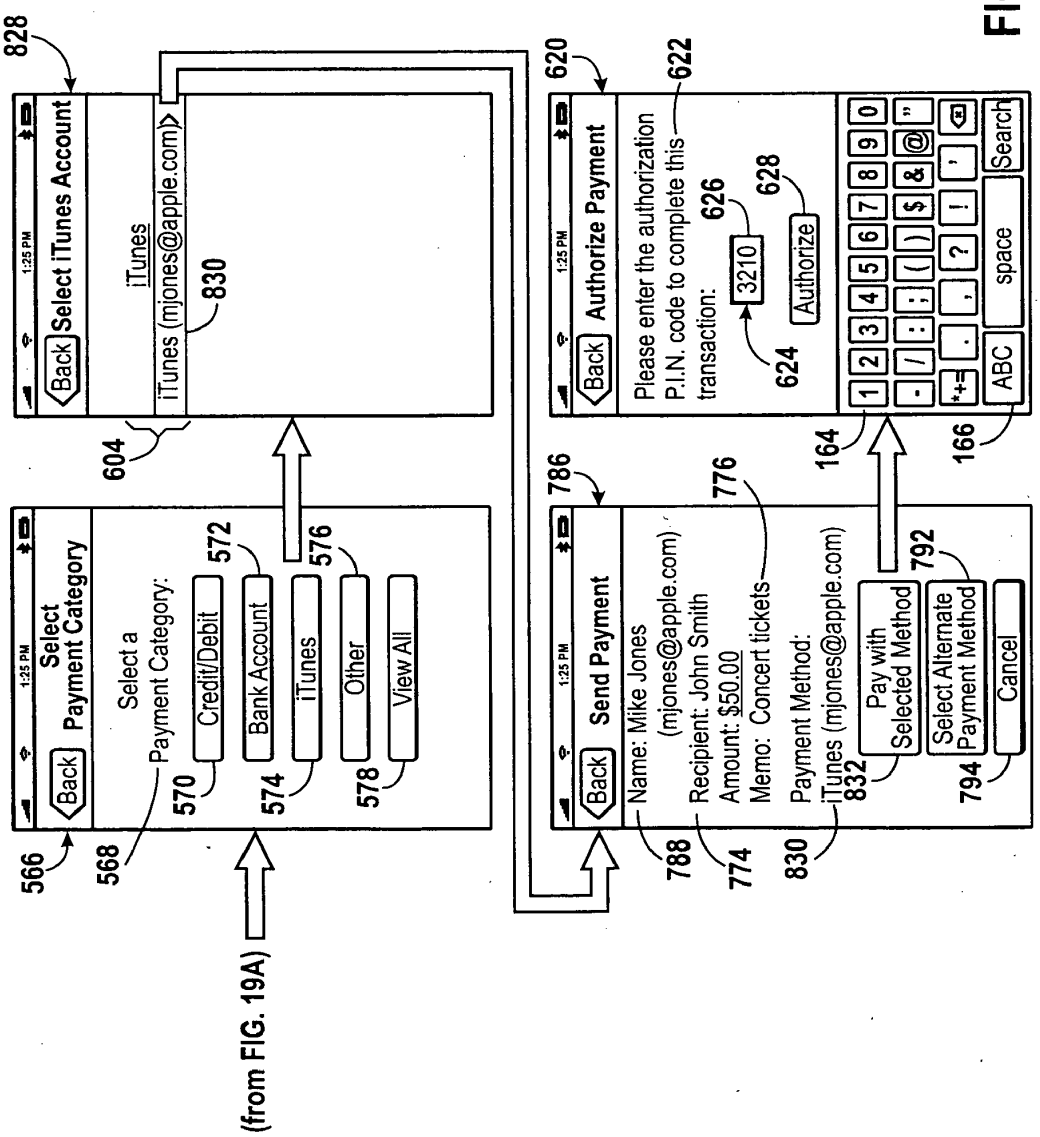
(from FIG. 19A)
566
Back
Select Payment Category
568
Select a Payment Category:
570
Credit/Debit
572
Bank Account
574
iTunes
576
Other
578
View All
828
Back
Select iTunes Account
604
iTunes
iTunes (mjones@apple.com)
830
786
Back
Send Payment
788
Name: Mike Jones (mjones@apple.com)
774
Recipient: John Smith
Amount: $50.00
776
Memo: Concert tickets
830
Payment Method: iTunes (mjones@apple.com)
832
Pay with Selected Method
792
Select Alternate Payment Method
794
Cancel
620
Back
Authorize Payment
622
Please enter the authorization P.I.N. code to complete this transaction:
624
3210
626
Authorize
628
164
166
ABC
space
Search

FIG. 19B

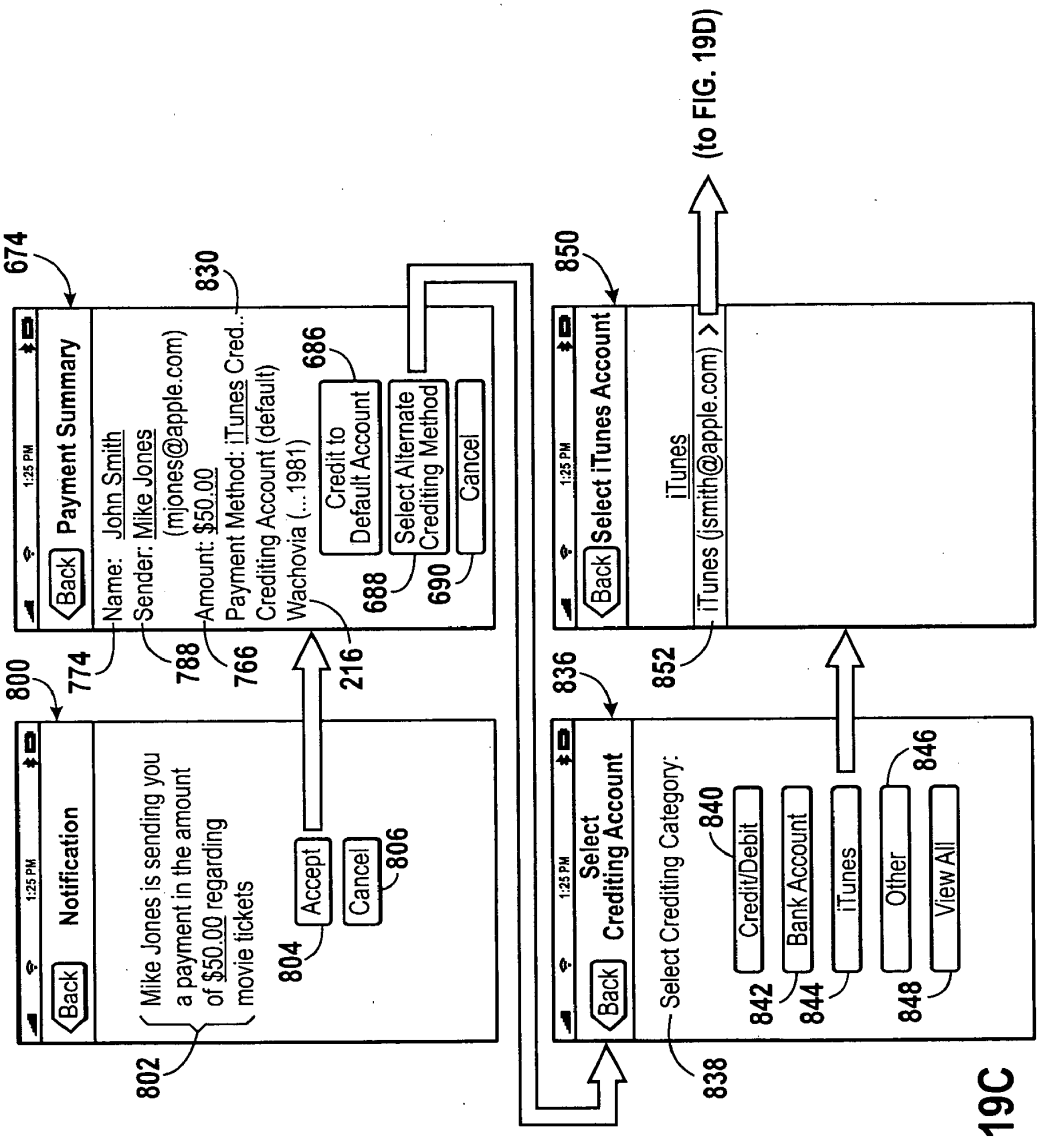
800
Back
Notification
1:25 PM
Mike Jones is sending you a payment in the amount of $50.00 regarding movie tickets
802
Accept
804
Cancel
806
674
Back
Payment Summary
1:25 PM
Name: John Smith
Sender: Mike Jones
(mjones@apple.com)
Amount: $50.00
Payment Method: iTunes Cred..
Crediting Account (default)
Wachovia (...1981)
774
788
766
216
830
Credit to Default Account
686
Select Alternate Crediting Method
688
Cancel
690
836
Back
Select Crediting Account
1:25 PM
Select Crediting Category:
838
Credit/Debit
840
842
Bank Account
844
iTunes
Other
846
848
View All
850
Back
Select iTunes Account
1:25 PM
iTunes
iTunes (jsmith@apple.com) >
852
(to FIG. 19D)

FIG. 19C

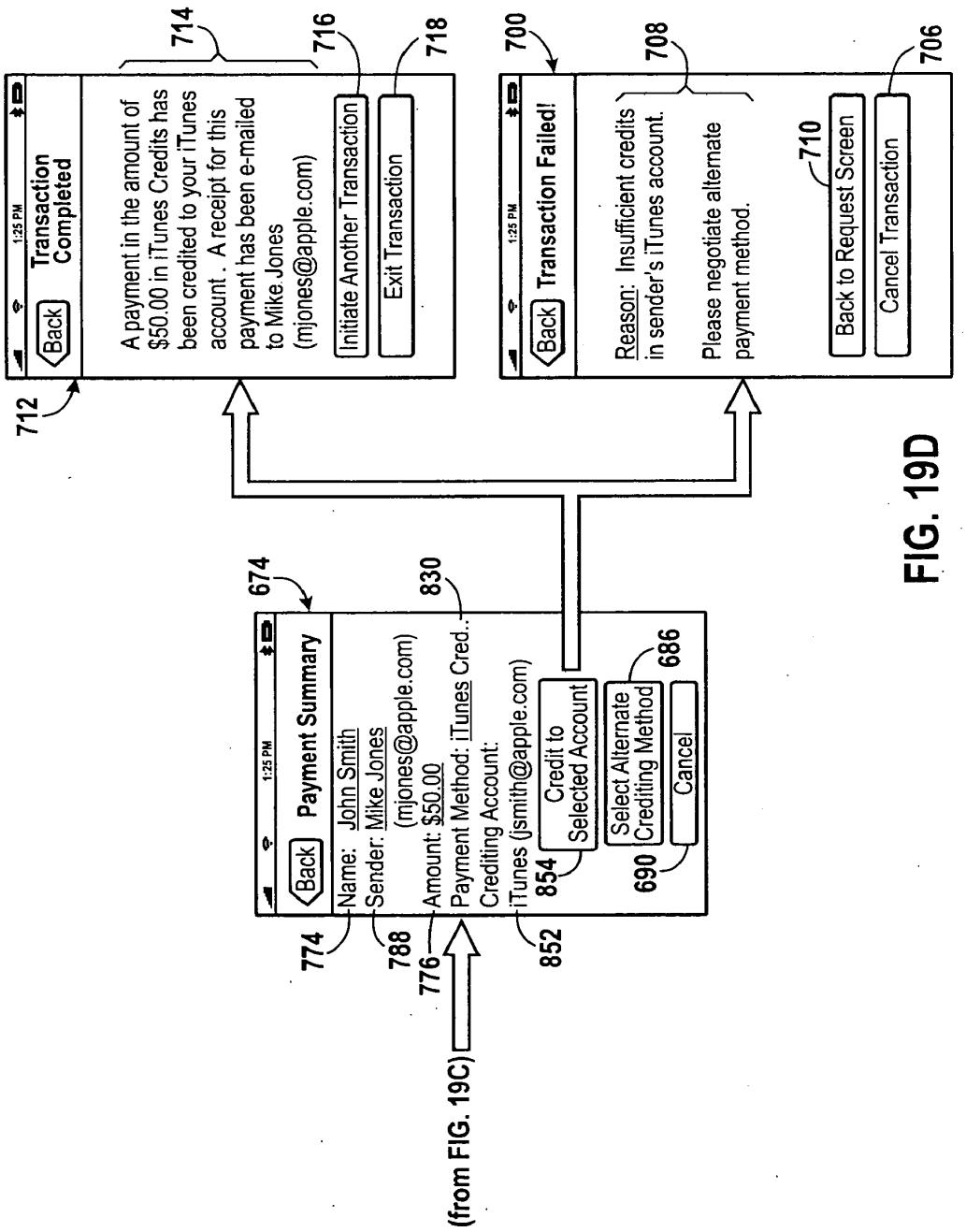
1:25 PM
Back
Transaction Completed
A payment in the amount of $50.00 in iTunes Credits has been credited to your iTunes account . A receipt for this payment has been e-mailed to Mike Jones (mjones@apple.com)
Initiate Another Transaction
Exit Transaction
712
714
716
718
1:25 PM
Back
Transaction Failed!
Reason: Insufficient credits in sender's iTunes account.
Please negotiate alternate payment method.
Back to Request Screen
Cancel Transaction
700
706
708
710
1:25 PM
Back
Payment Summary
Name: John Smith
Sender: Mike Jones
(mjones@apple.com)
Amount: $50.00
Payment Method: iTunes Cred...
Crediting Account:
iTunes (jsmith@apple.com)
Credit to Selected Account
Select Alternate Crediting Method
Cancel
674
774
788
776
830
852
854
686
690
(from FIG. 19C)

FIG. 19D

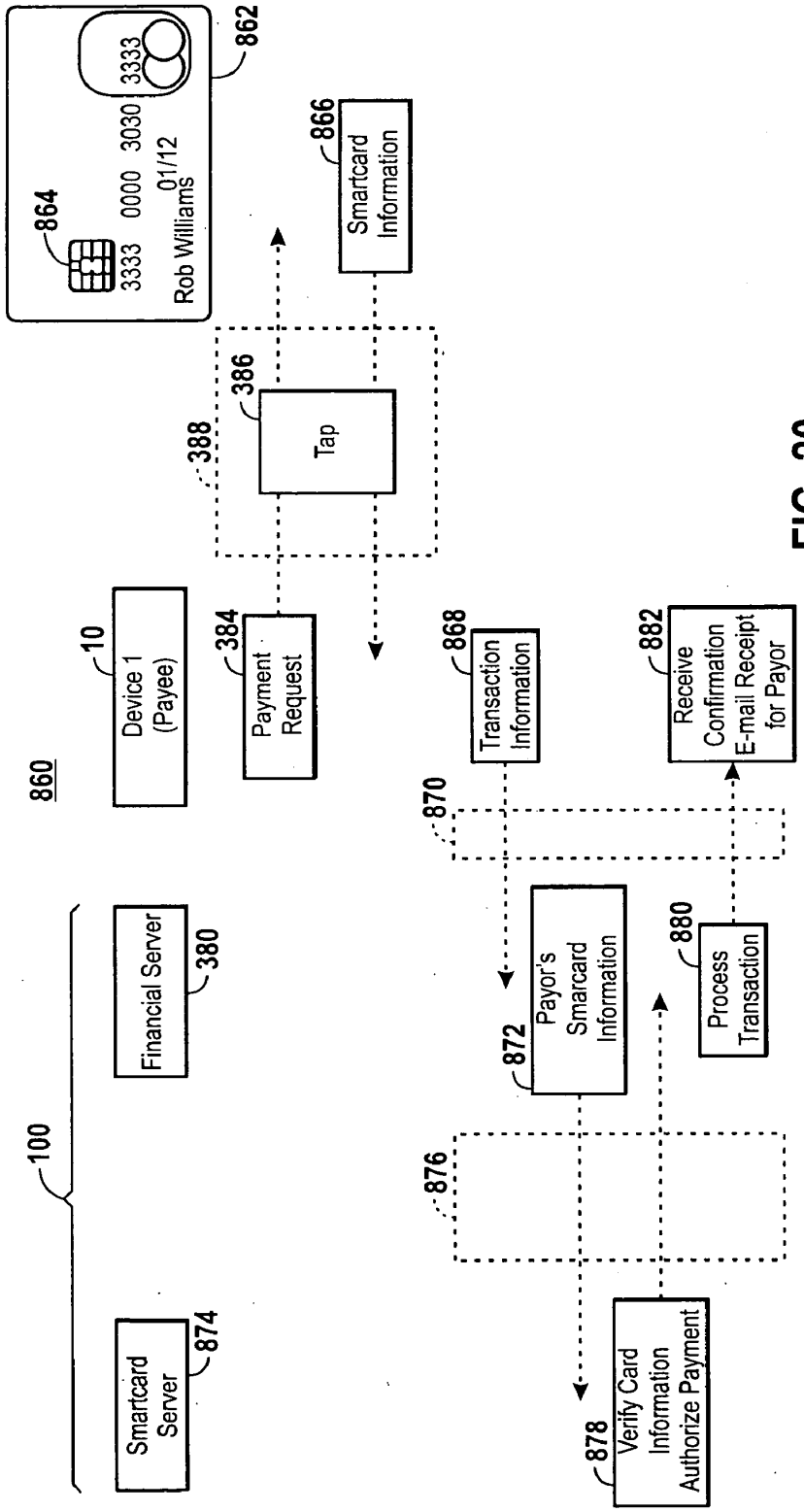
862
3333
3333 0000 3030
01/12
Rob Williams
864
866
Smartcard Information
386
Tap
388
860
10
Device 1 (Payee)
384
Payment Request
868
Transaction Information
882
Receive Confirmation E-mail Receipt for Payor
870
100
Financial Server
380
872
Payor's Smarcard Information
880
Process Transaction
876
Smartcard Server
874
878
Verify Card Information Authorize Payment

FIG. 20

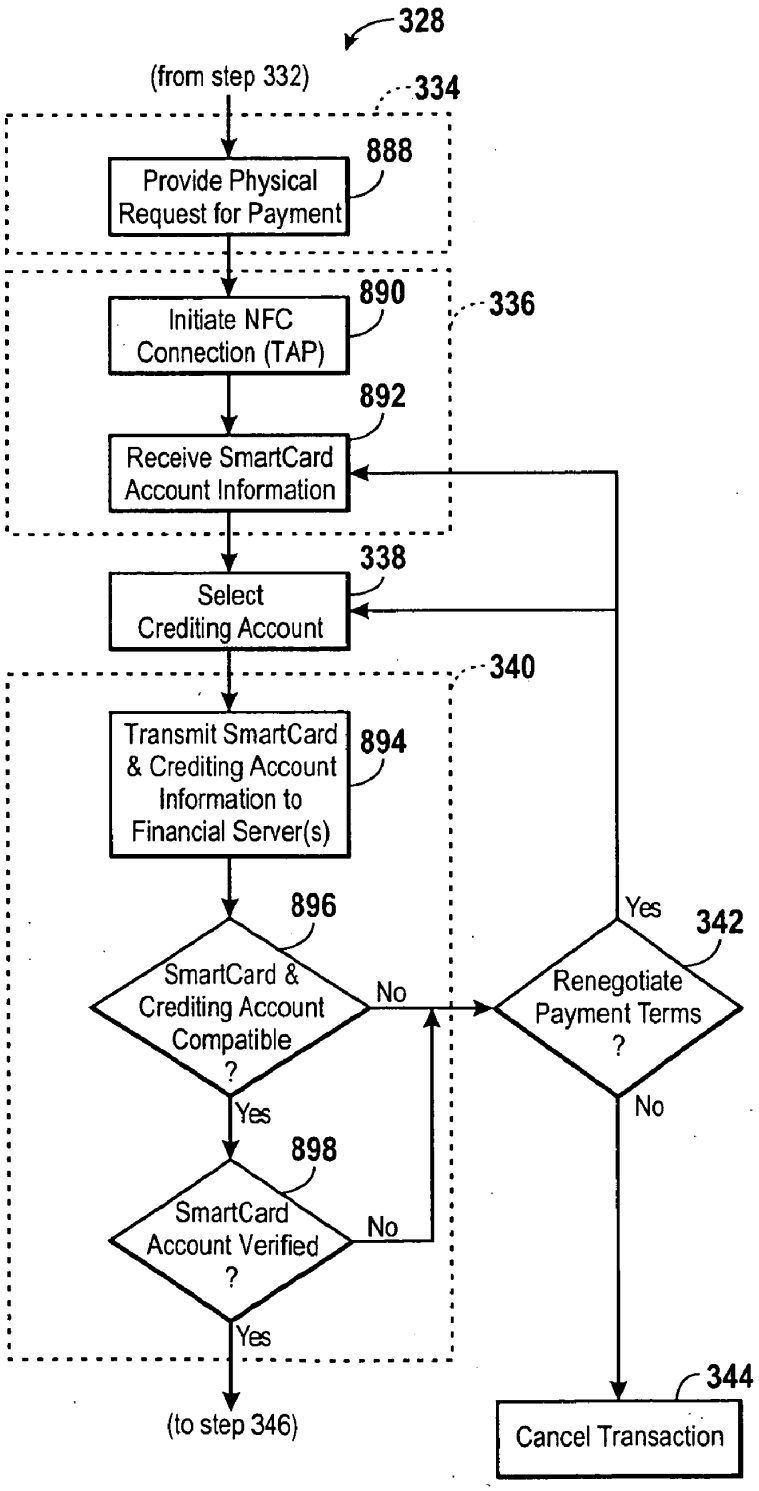
328
(from step 332)
334
888
Provide Physical Request for Payment
890
Initiate NFC Connection (TAP)
336
892
Receive SmartCard Account Information
338
Select Crediting Account
340
Transmit SmartCard & Crediting Account Information to Financial Server(s)
894
896
SmartCard & Crediting Account Compatible ?
No
Yes
898
SmartCard Account Verified ?
No
Yes
(to step 346)
Yes
342
Renegotiate Payment Terms ?
No
344
Cancel Transaction

FIG. 21A

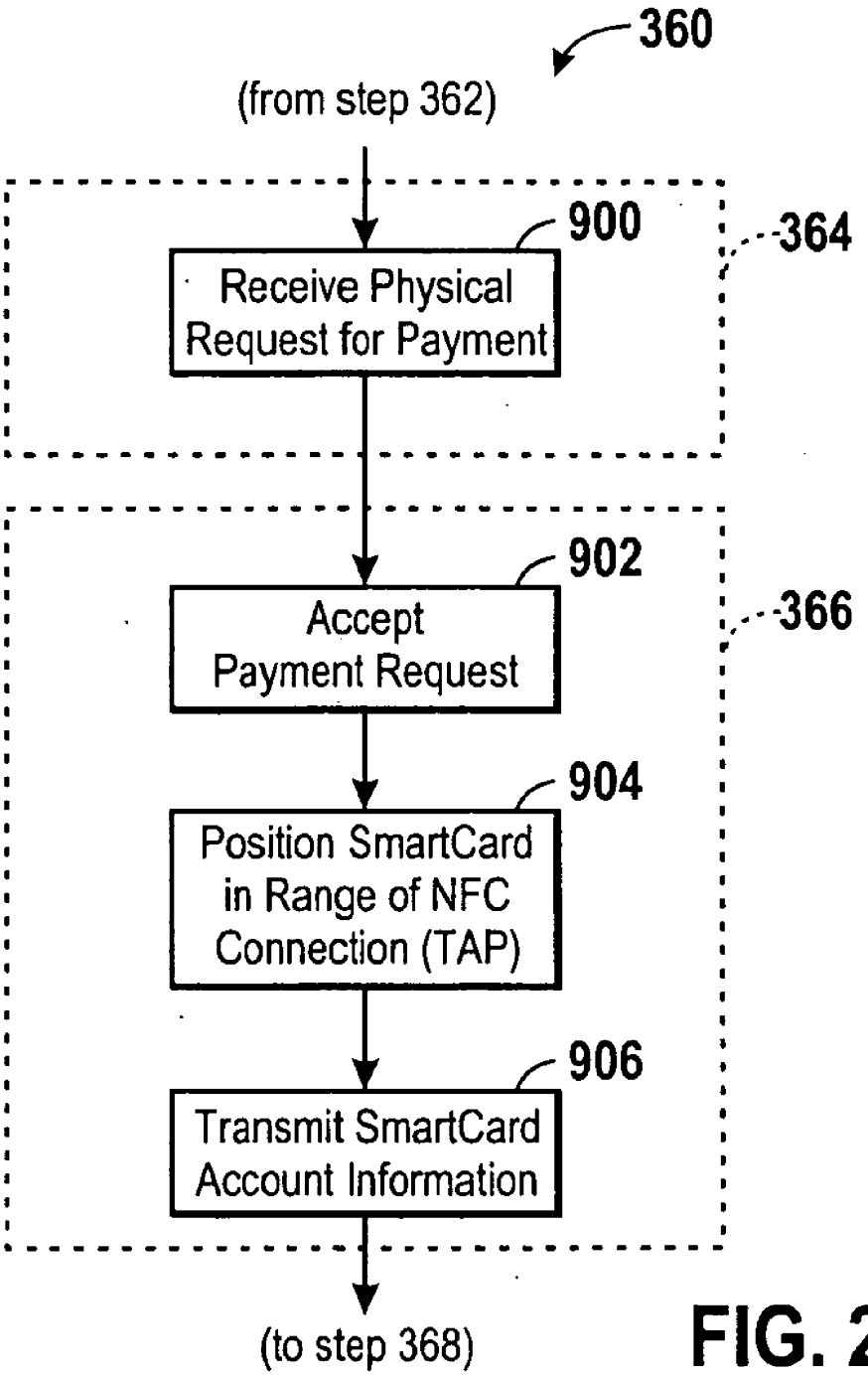
360
(from step 362)
900
364
Receive Physical Request for Payment
902
366
Accept Payment Request
904
Position SmartCard in Range of NFC Connection (TAP)
906
Transmit SmartCard Account Information
(to step 368)

FIG. 21B

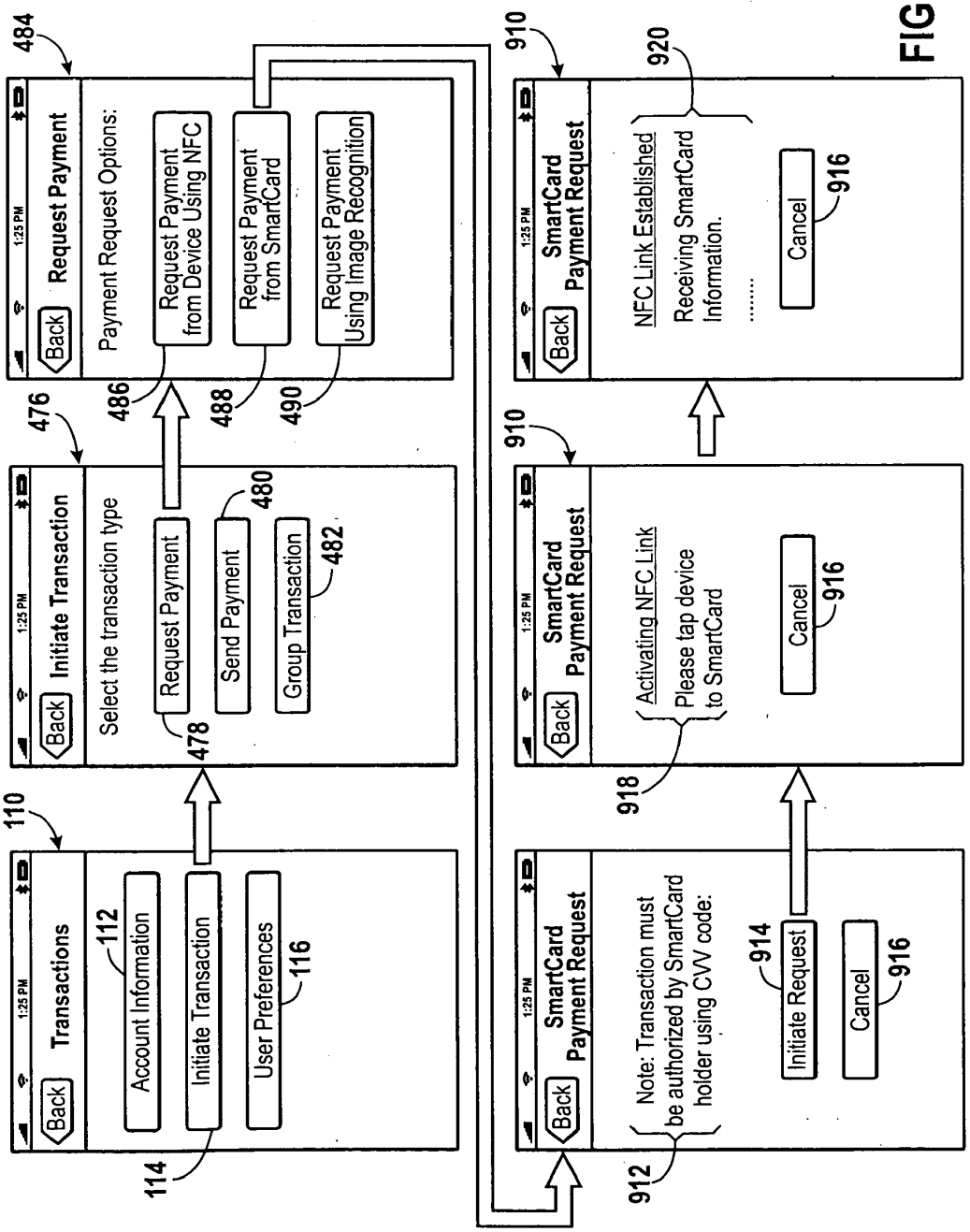
110
Back
Transactions
Account Information
112
Initiate Transaction
114
User Preferences
116
476
Back
Initiate Transaction
Select the transaction type
Request Payment
478
Send Payment
480
Group Transaction
482
484
Back
Request Payment
Payment Request Options:
Request Payment from Device Using NFC
486
Request Payment from SmartCard
488
Request Payment Using Image Recognition
490
910
Back
SmartCard Payment Request
Note: Transaction must be authorized by SmartCard holder using CVV code:
912
Initiate Request
914
Cancel
916
910
Back
SmartCard Payment Request
Activating NFC Link
Please tap device to SmartCard
918
Cancel
916
910
Back
SmartCard Payment Request
NFC Link Established
Receiving SmartCard Information.
.....
920
Cancel
916

FIG. 22A

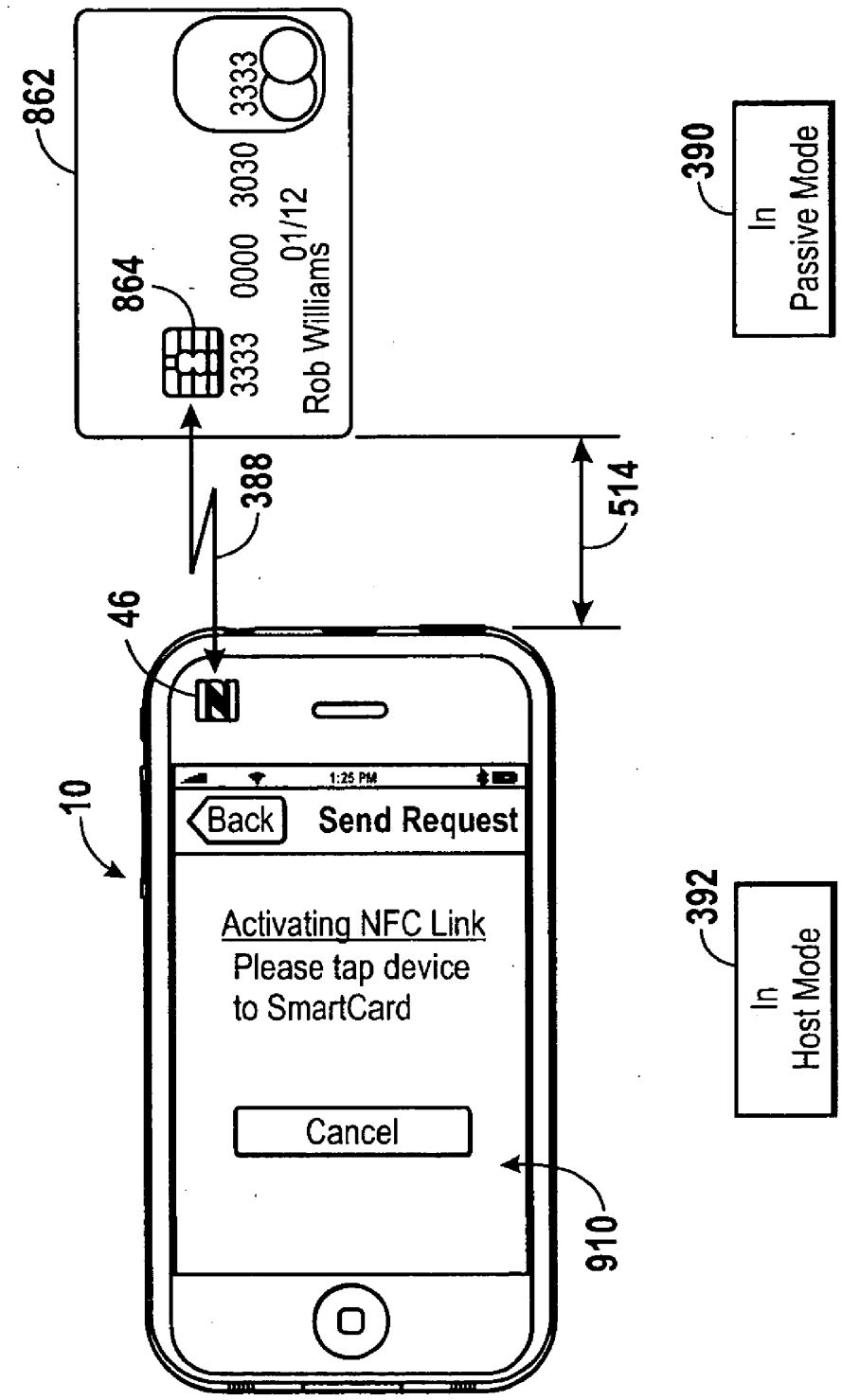
862
3333
3030
0000
3333
01/12
Rob Williams
864
388
514
46
10
1:25 PM
Back
Send Request
Activating NFC Link
Please tap device
to SmartCard
Cancel
910
390
In
Passive Mode
392
In
Host Mode

FIG. 22B

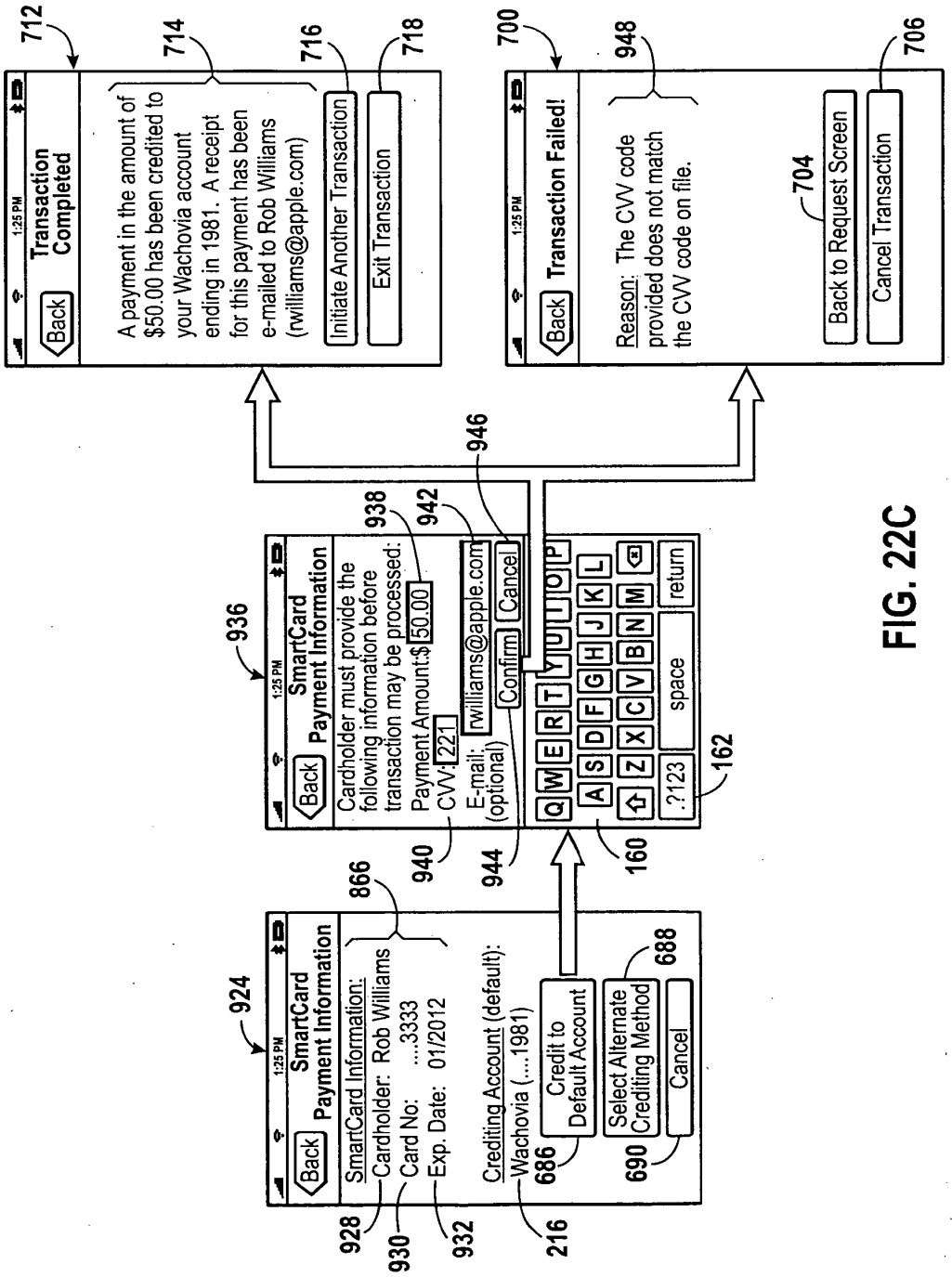
712
Back
1:25 PM
Transaction Completed
714
A payment in the amount of $50.00 has been credited to your Wachovia account ending in 1981. A receipt for this payment has been e-mailed to Rob Williams (rwilliams@apple.com)
716
Initiate Another Transaction
718
Exit Transaction
700
Transaction Failed!
948
Reason: The CVV code provided does not match the CVV code on file.
704
Back to Request Screen
706
Cancel Transaction
946
936
SmartCard Payment Information
938
942
Cardholder must provide the following information before transaction may be processed:
Payment Amount:$ 50.00
CVV: 221
E-mail: (optional) rwilliams@apple.com
Confirm
Cancel
940
944
160
162
924
866
SmartCard Information:
Cardholder: Rob Williams
Card No: 3333
Exp. Date: 01/2012
Crediting Account (default):
Wachovia (....1981)
Credit to Default Account
Select Alternate Crediting Method
688
Cancel
686
690
928
930
932
216

FIG. 22C

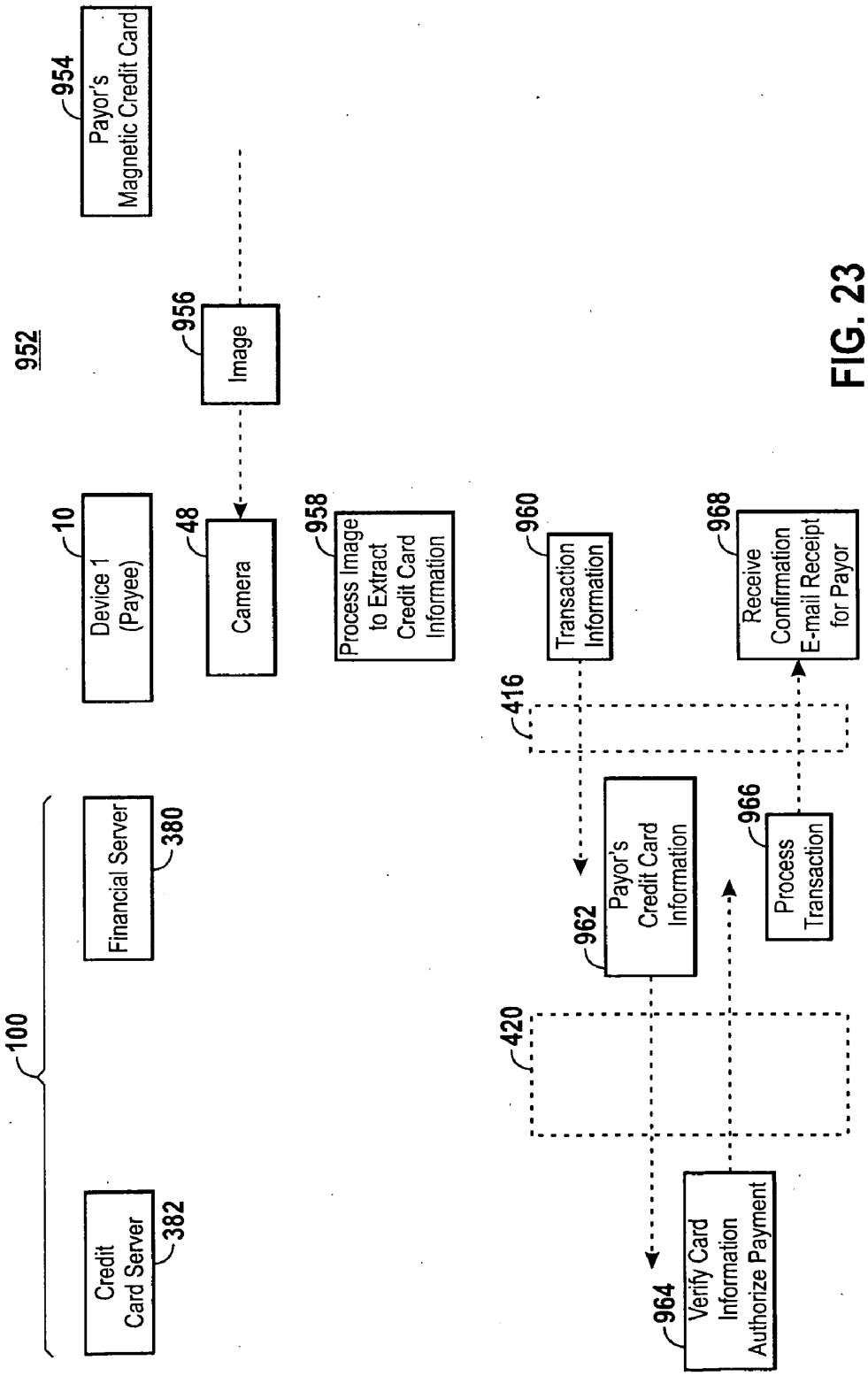
952
954
Payor's Magnetic Credit Card
956
Image
10
Device 1 (Payee)
48
Camera
958
Process Image to Extract Credit Card Information
960
Transaction Information
968
Receive Confirmation E-mail Receipt for Payor
416
100
Financial Server
380
962
Payor's Credit Card Information
966
Process Transaction
420
Credit Card Server
382
964
Verify Card Information Authorize Payment

FIG. 23

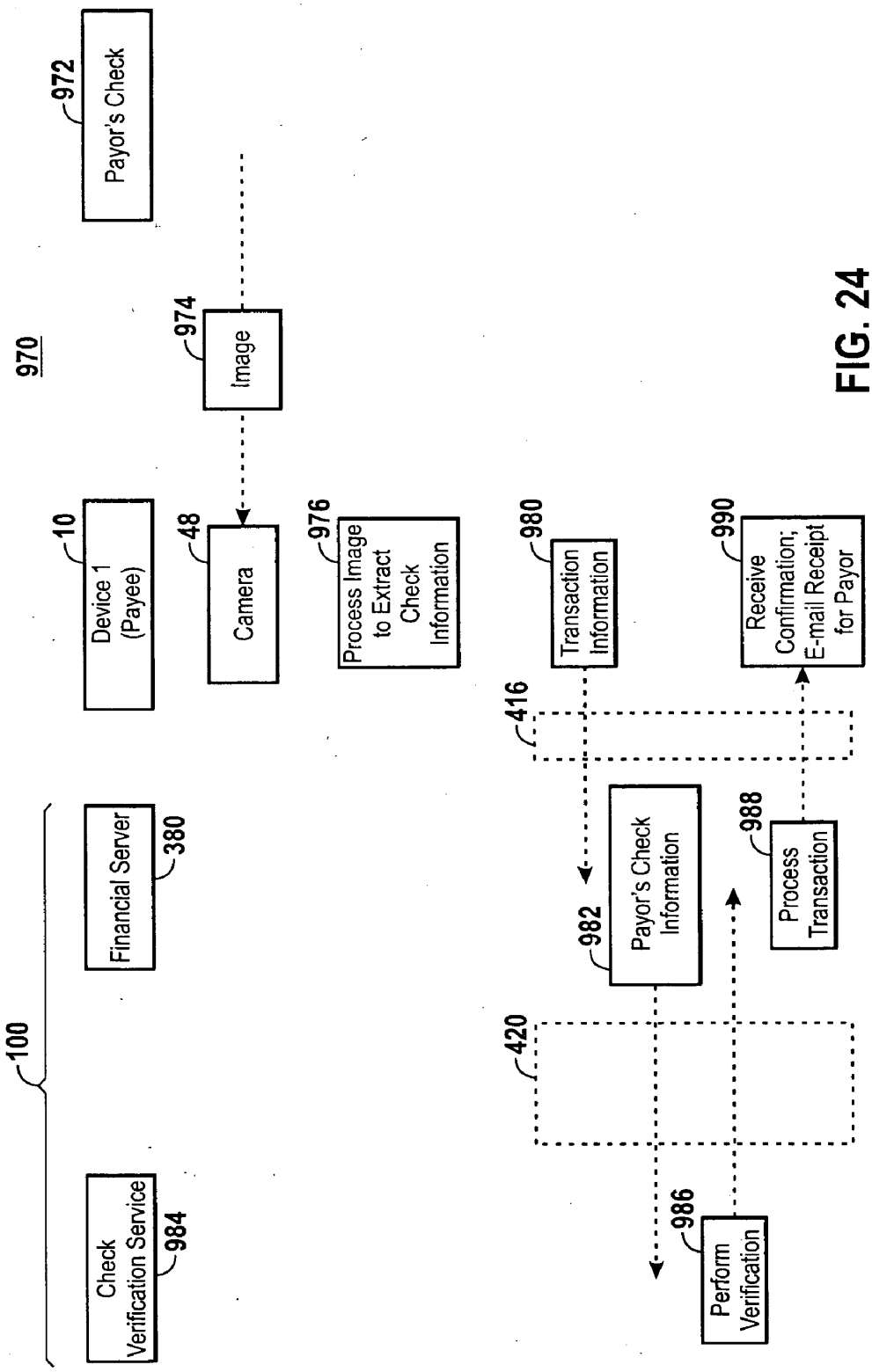
970
972
Payor's Check
974
Image
10
Device 1 (Payee)
48
Camera
976
Process Image to Extract Check Information
980
Transaction Information
990
Receive Confirmation; E-mail Receipt for Payor
416
100
Financial Server
380
982
Payor's Check Information
988
Process Transaction
420
Check Verification Service
984
986
Perform Verification

FIG. 24

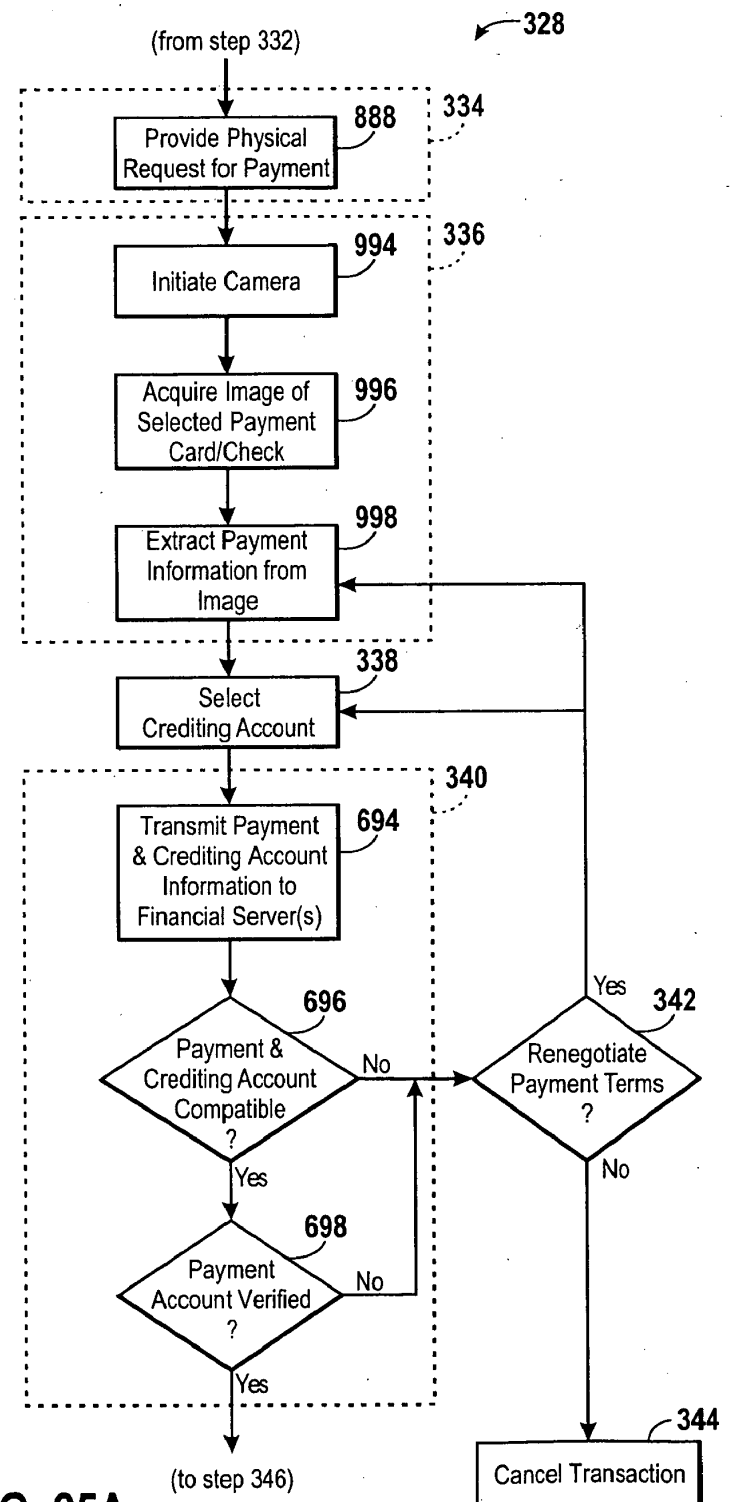
328
(from step 332)
334
888
Provide Physical Request for Payment
336
994
Initiate Camera
996
Acquire Image of Selected Payment Card/Check
998
Extract Payment Information from Image
338
Select Crediting Account
340
694
Transmit Payment & Crediting Account Information to Financial Server(s)
696
Payment & Crediting Account Compatible ?
No
Yes
698
Payment Account Verified ?
No
Yes
(to step 346)
342
Renegotiate Payment Terms ?
Yes
No
344
Cancel Transaction

FIG. 25A

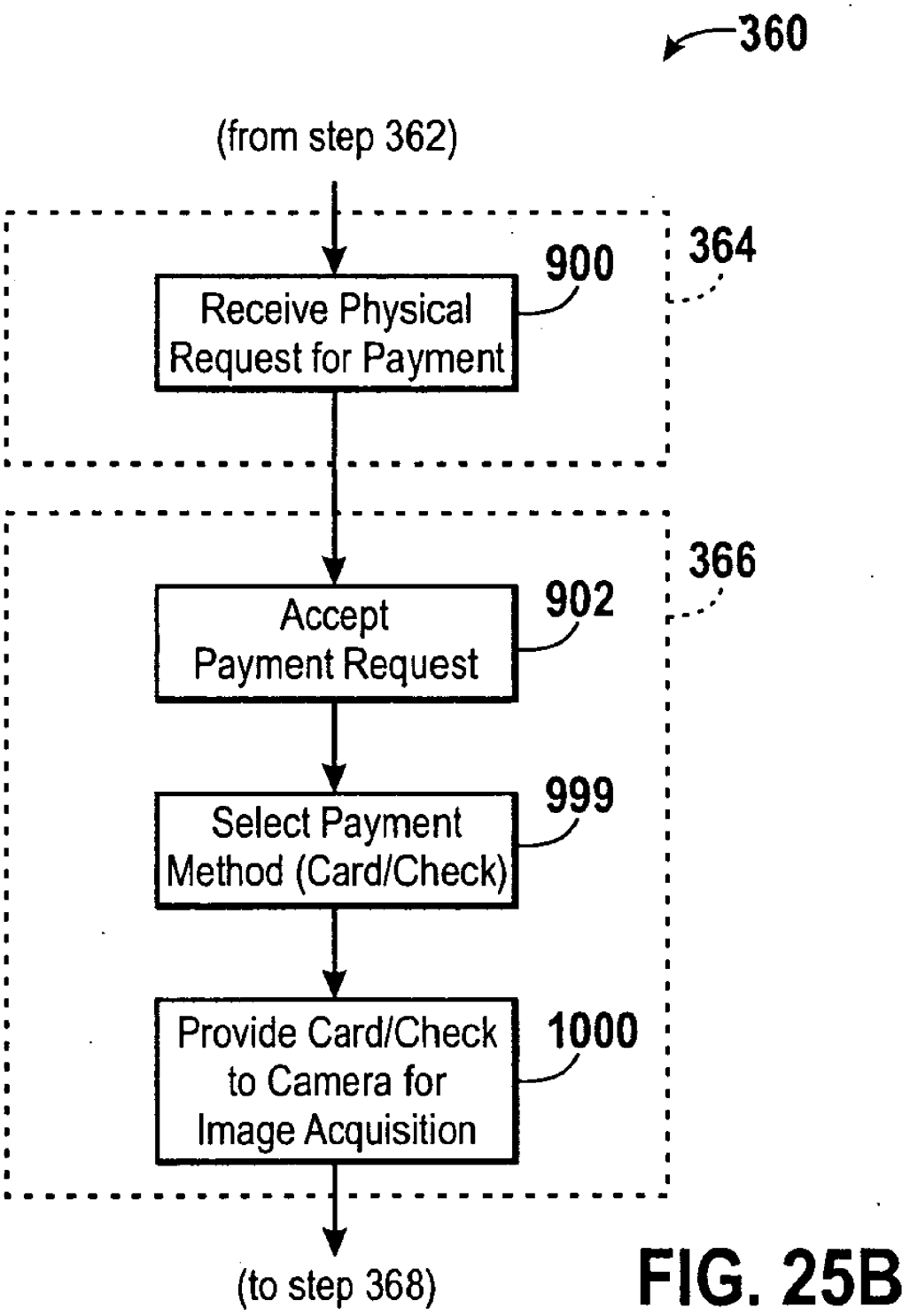
360
(from step 362)
364
900
Receive Physical Request for Payment
366
902
Accept Payment Request
999
Select Payment Method (Card/Check)
1000
Provide Card/Check to Camera for Image Acquisition
(to step 368)

FIG. 25B

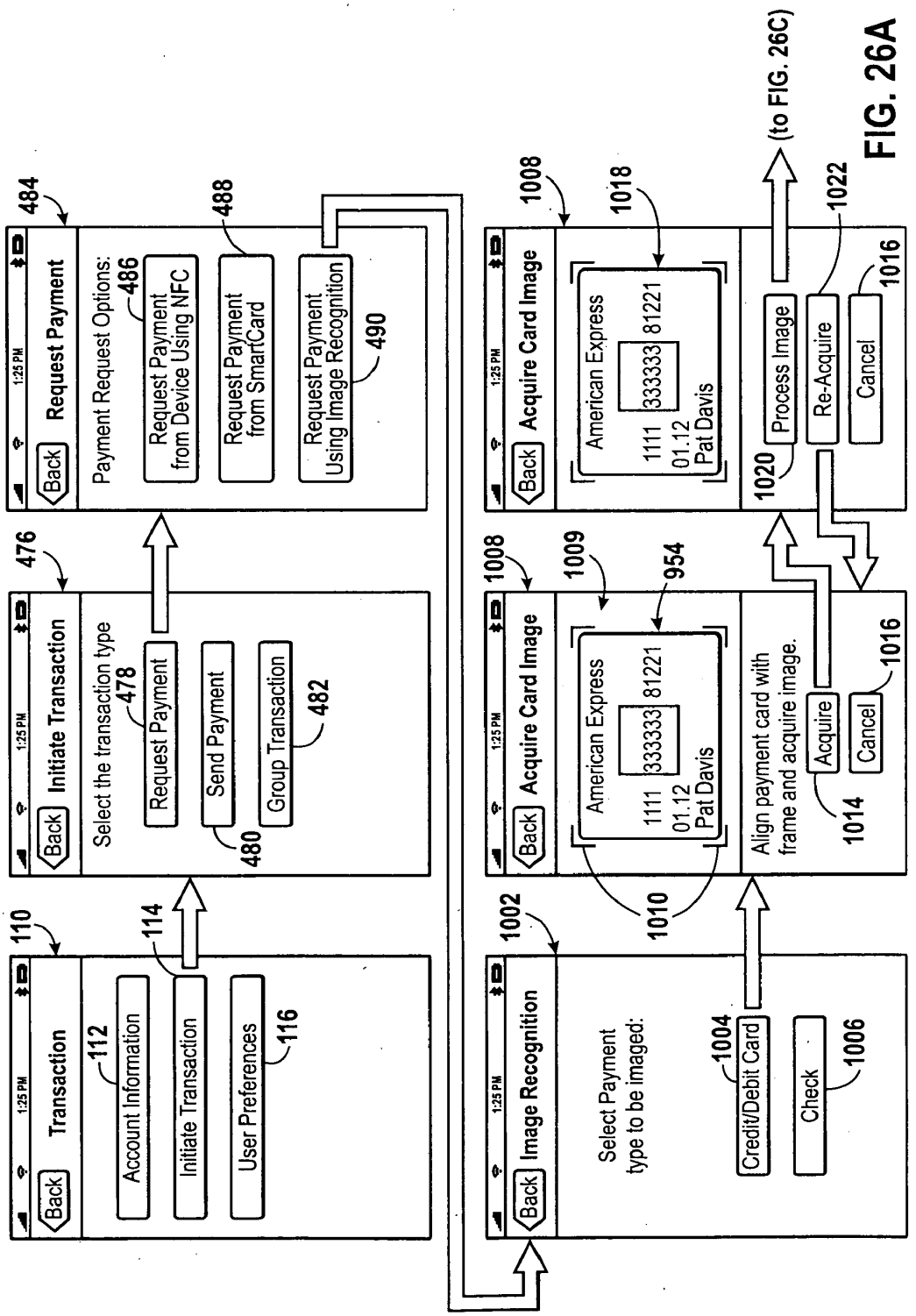
Back
Transaction
Account Information
Initiate Transaction
User Preferences
110
112
114
116
Back
Initiate Transaction
Select the transaction type
Request Payment
Send Payment
Group Transaction
476
478
480
482
Back
Request Payment
Payment Request Options:
Request Payment from Device Using NFC
Request Payment from SmartCard
Request Payment Using Image Recognition
484
486
488
490
Back
Image Recognition
Select Payment type to be imaged:
Credit/Debit Card
Check
1002
1004
1006
Back
Acquire Card Image
American Express
1111 333333 81221
01.12
Pat Davis
Align payment card with frame and acquire image.
Acquire
Cancel
1008
1009
954
1010
1014
1016
Back
Acquire Card Image
American Express
1111 333333 81221
01.12
Pat Davis
Process Image
Re-Acquire
Cancel
1008
1018
1020
1022
1016
(to FIG. 26C)

FIG. 26A

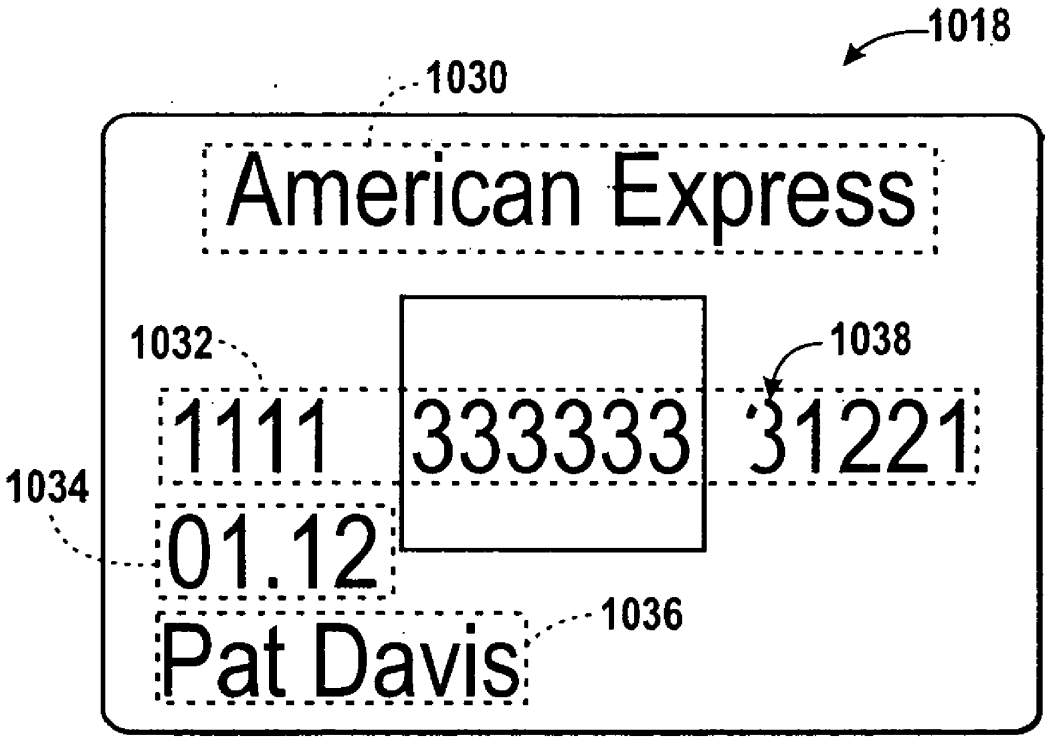
1018
1030
American Express
1032
1038
1111
333333
31221
1034
01.12
1036
Pat Davis

FIG. 26B

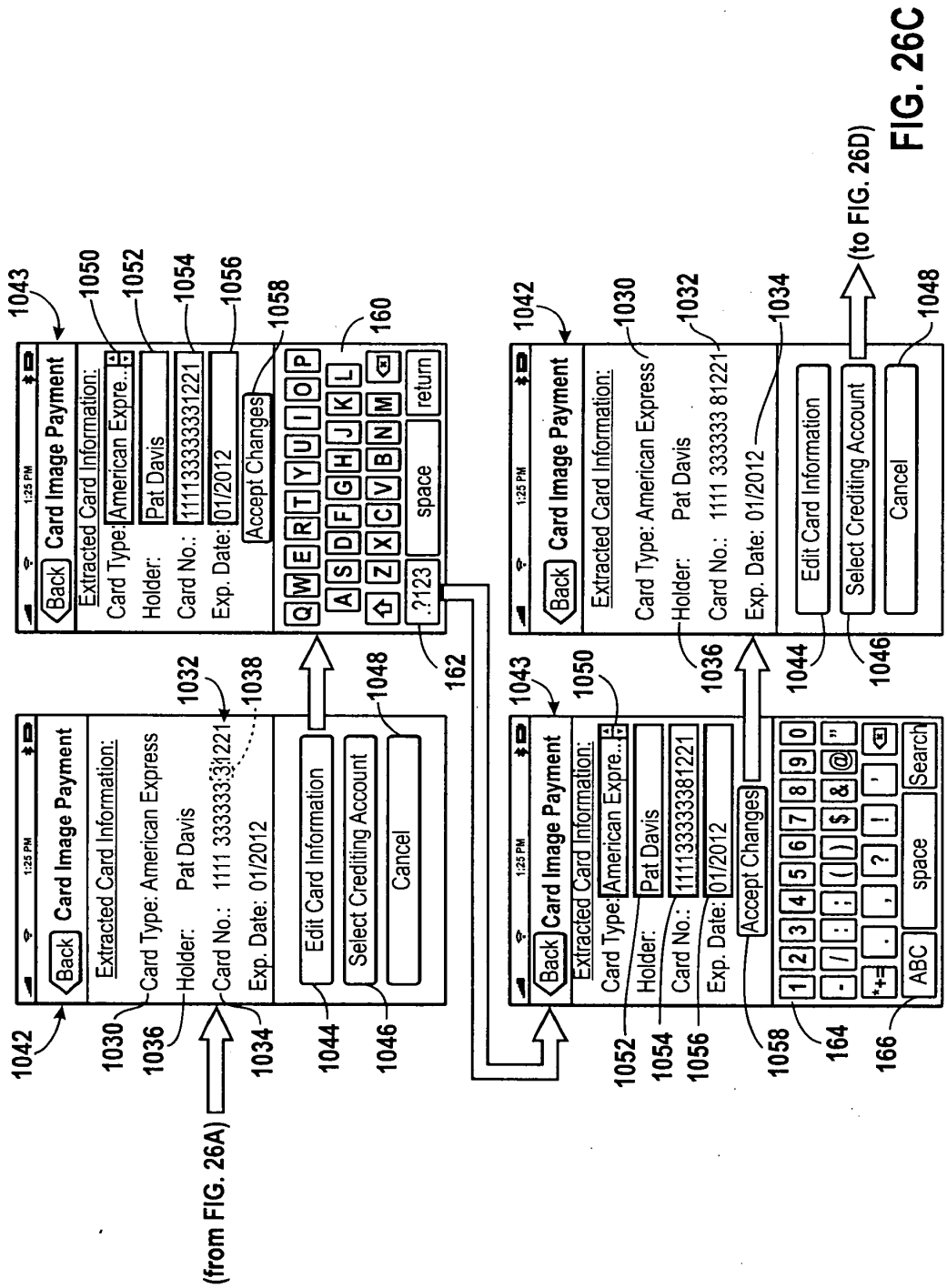
(from FIG. 26A)
1:25 PM
Back
Card Image Payment
Extracted Card Information:
Card Type: American Express
Holder: Pat Davis
Card No.: 1111 333333 31221
Exp. Date: 01/2012
Edit Card Information
Select Crediting Account
Cancel
Card Type: American Expre...
Card No.: 111133333331221
Accept Changes
.?123
space
return
Card No.: 111133333381221
ABC
Search
(to FIG. 26D)
1042
1043
1030
1032
1034
1036
1038
1044
1046
1048
1050
1052
1054
1056
1058
160
162
164
166

FIG. 26C

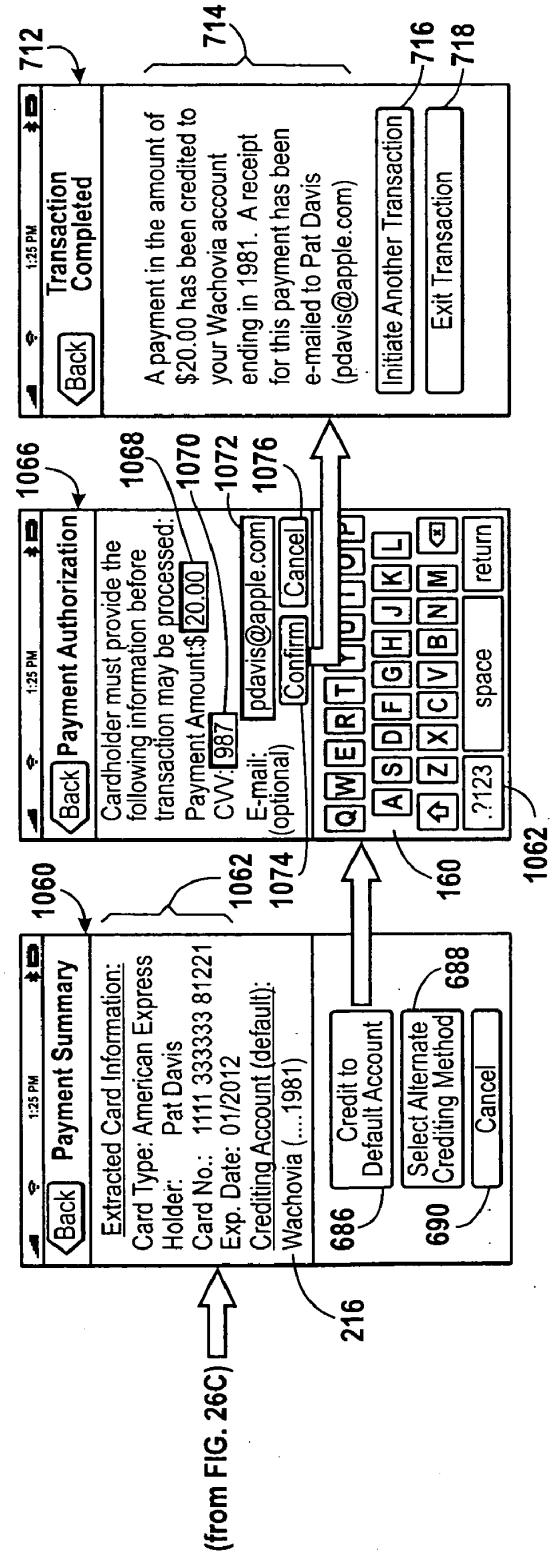
(from FIG. 26C)
1:25 PM
Back
Payment Summary
Extracted Card Information:
Card Type: American Express
Holder: Pat Davis
Card No.: 1111 333333 81221
Exp. Date: 01/2012
Crediting Account (default):
Wachovia (....1981)
Credit to Default Account
Select Alternate Crediting Method
Cancel
Payment Authorization
Cardholder must provide the following information before transaction may be processed:
Payment Amount:$ 20.00
CVV: 987
E-mail: (optional)
pdavis@apple.com
Confirm
Cancel
space
return
Transaction Completed
A payment in the amount of $20.00 has been credited to your Wachovia account ending in 1981. A receipt for this payment has been e-mailed to Pat Davis (pdavis@apple.com)
Initiate Another Transaction
Exit Transaction
1060
1062
1066
1068
1070
1072
1074
1076
160
216
686
688
690
712
714
716
718

FIG. 26D

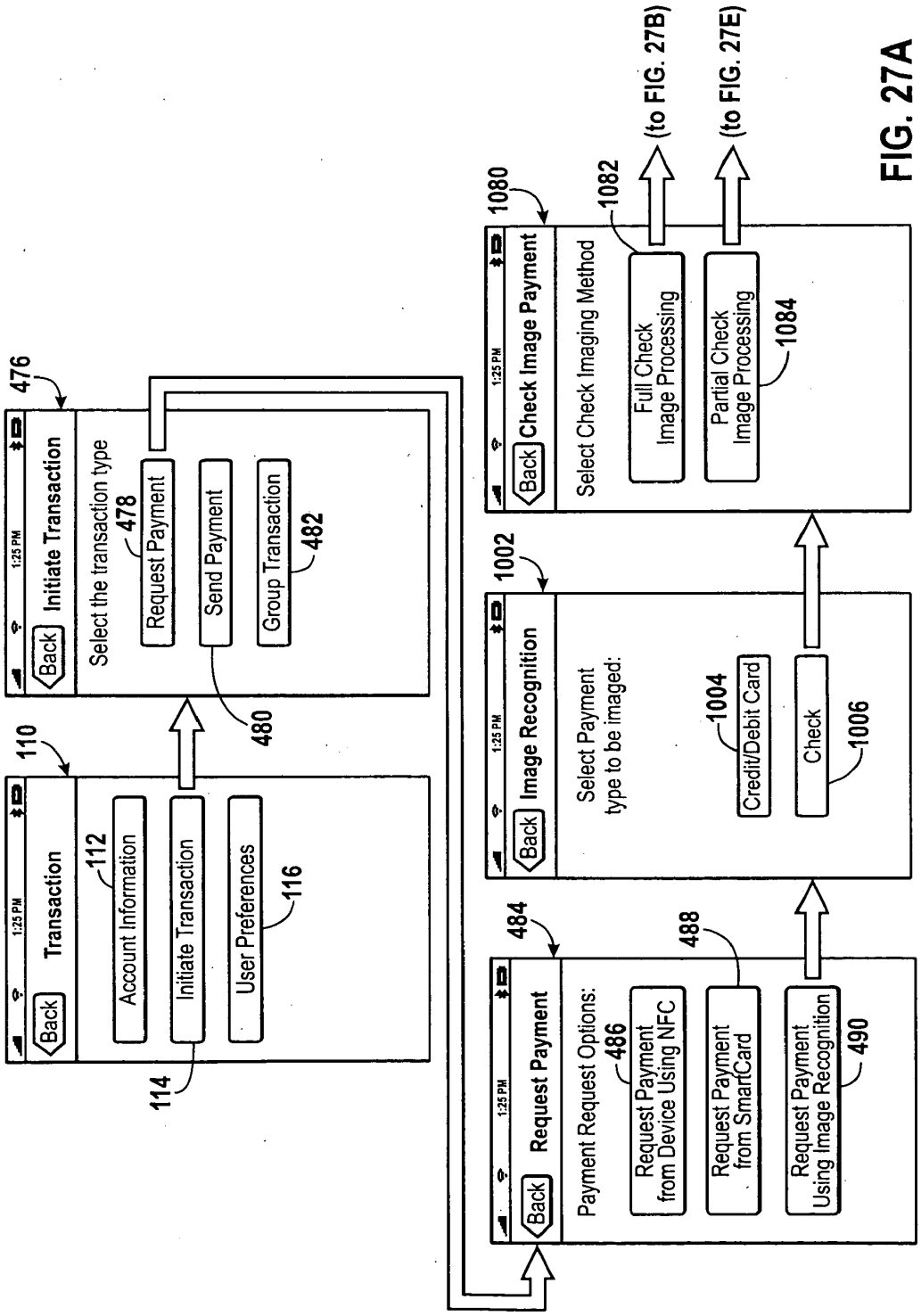
1:25 PM
Back
Transaction
110
Account Information
112
Initiate Transaction
114
User Preferences
116
Initiate Transaction
476
Select the transaction type
Request Payment
478
Send Payment
480
Group Transaction
482
Request Payment
484
Payment Request Options:
Request Payment from Device Using NFC
486
Request Payment from SmartCard
488
Request Payment Using Image Recognition
490
Image Recognition
1002
Select Payment type to be imaged:
Credit/Debit Card
1004
Check
1006
Check Image Payment
1080
Select Check Imaging Method
Full Check Image Processing
1082
Partial Check Image Processing
1084
(to FIG. 27B)
(to FIG. 27E)

FIG. 27A

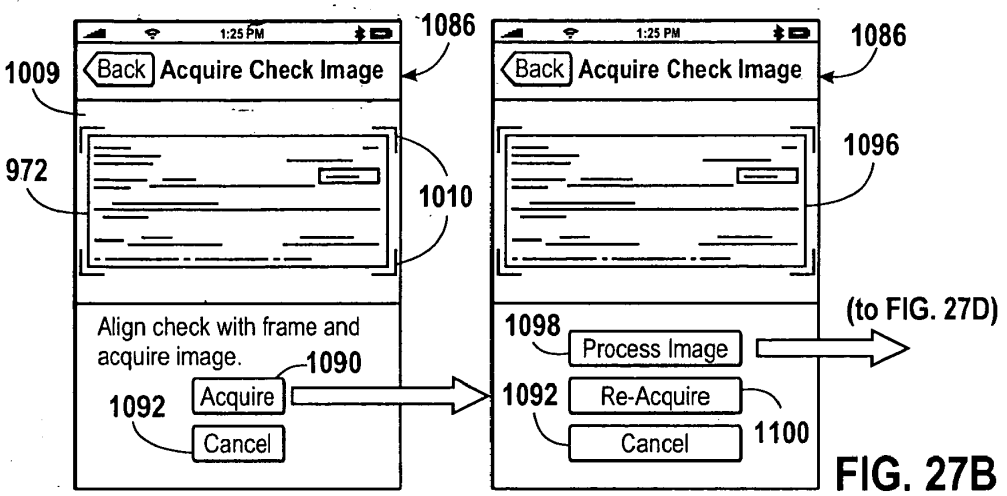

FIG. 27B

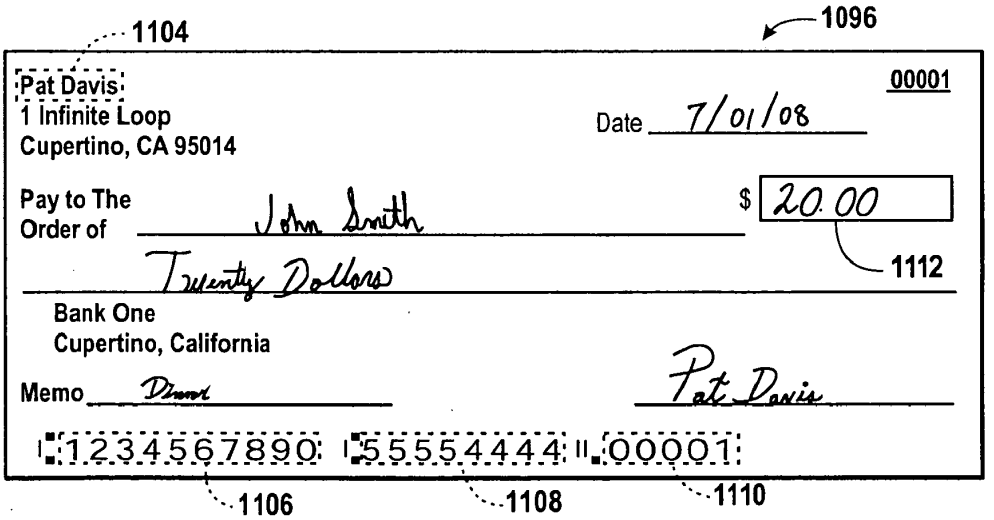

FIG. 27C

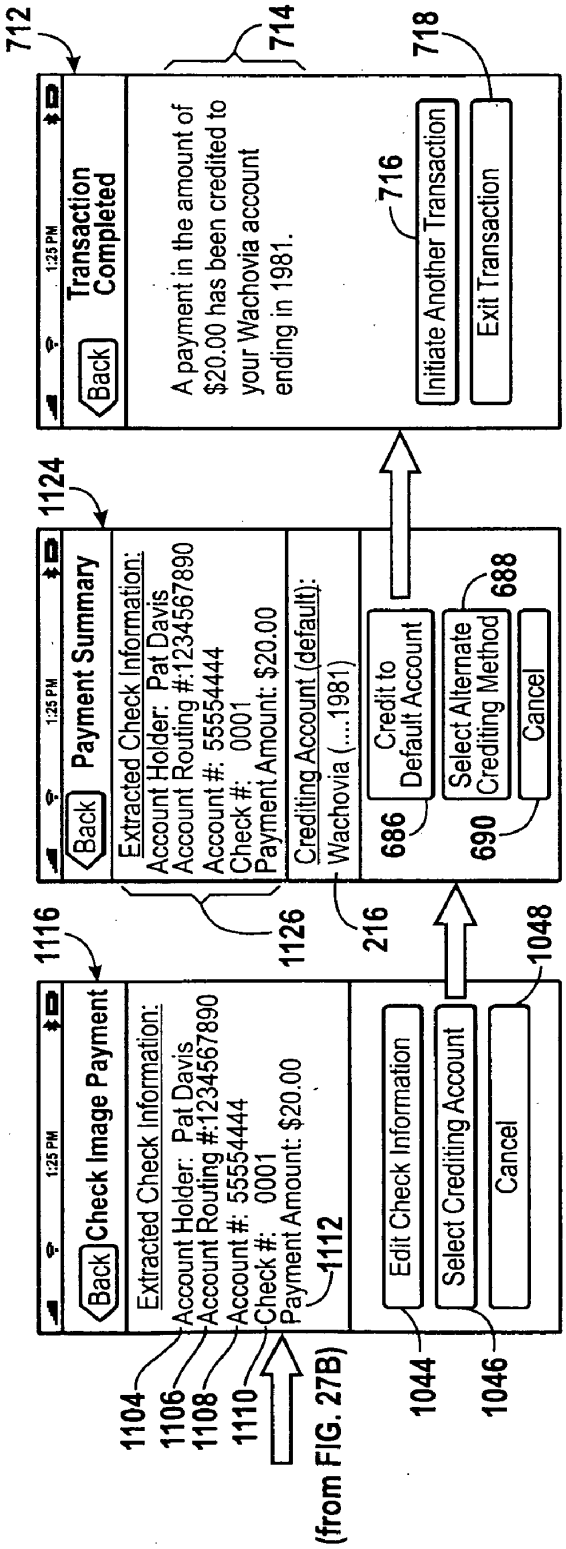
712
Back
1:25 PM
Transaction Completed
A payment in the amount of $20.00 has been credited to your Wachovia account ending in 1981.
714
716
Initiate Another Transaction
718
Exit Transaction
1124
Back
1:25 PM
Payment Summary
Extracted Check Information:
Account Holder: Pat Davis
Account Routing #:1234567890
Account #: 55554444
Check #: 0001
Payment Amount: $20.00
1126
Crediting Account (default):
Wachovia (....1981)
216
Credit to Default Account
686
Select Alternate Crediting Method
688
Cancel
690
1116
Back
1:25 PM
Check Image Payment
Extracted Check Information:
Account Holder: Pat Davis
Account Routing #:1234567890
Account #: 55554444
Check #: 0001
Payment Amount: $20.00
1112
1104
1106
1108
1110
(from FIG. 27B)
Edit Check Information
1044
Select Crediting Account
1046
Cancel
1048

FIG. 27D

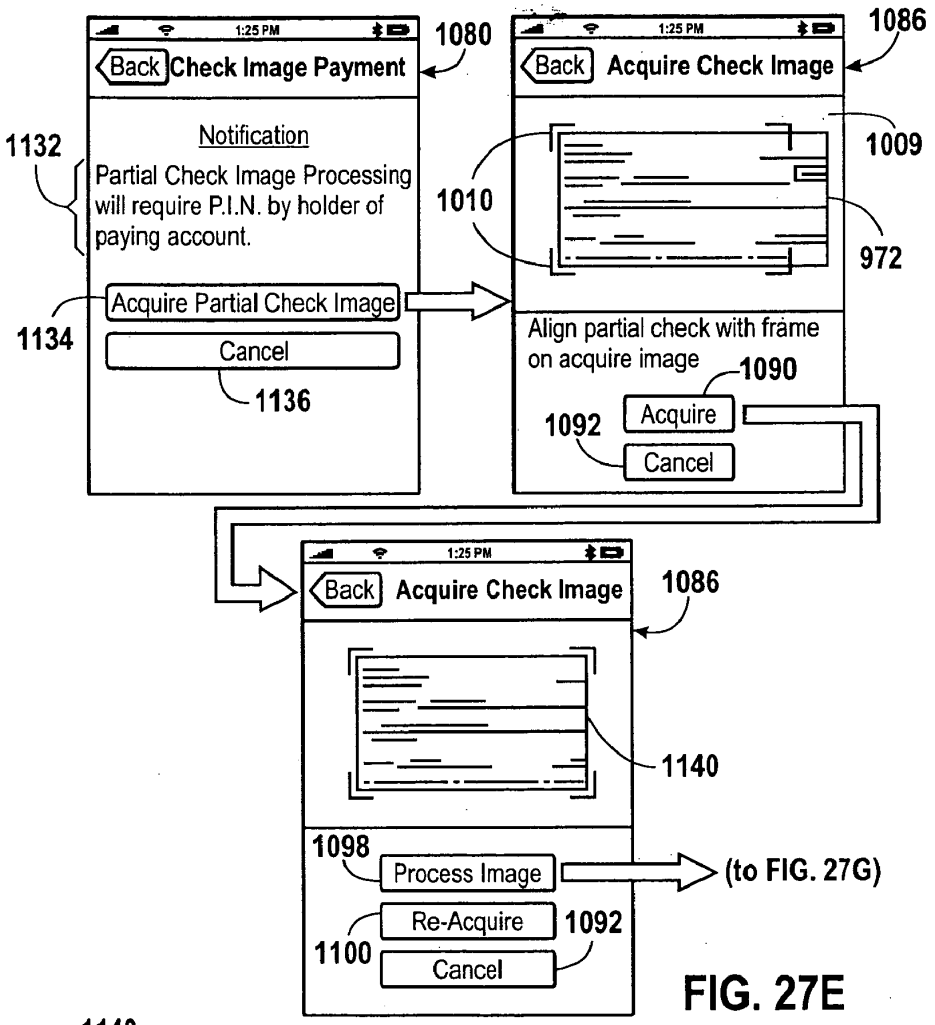

FIG. 27E

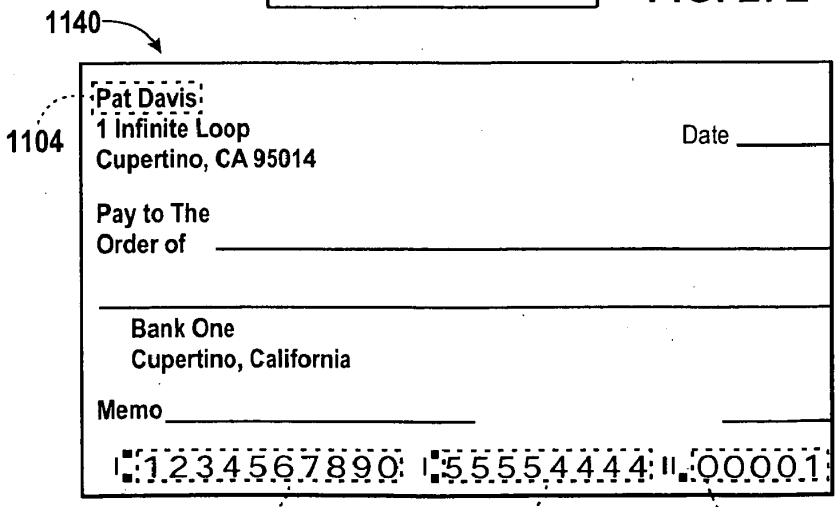

FIG. 27F

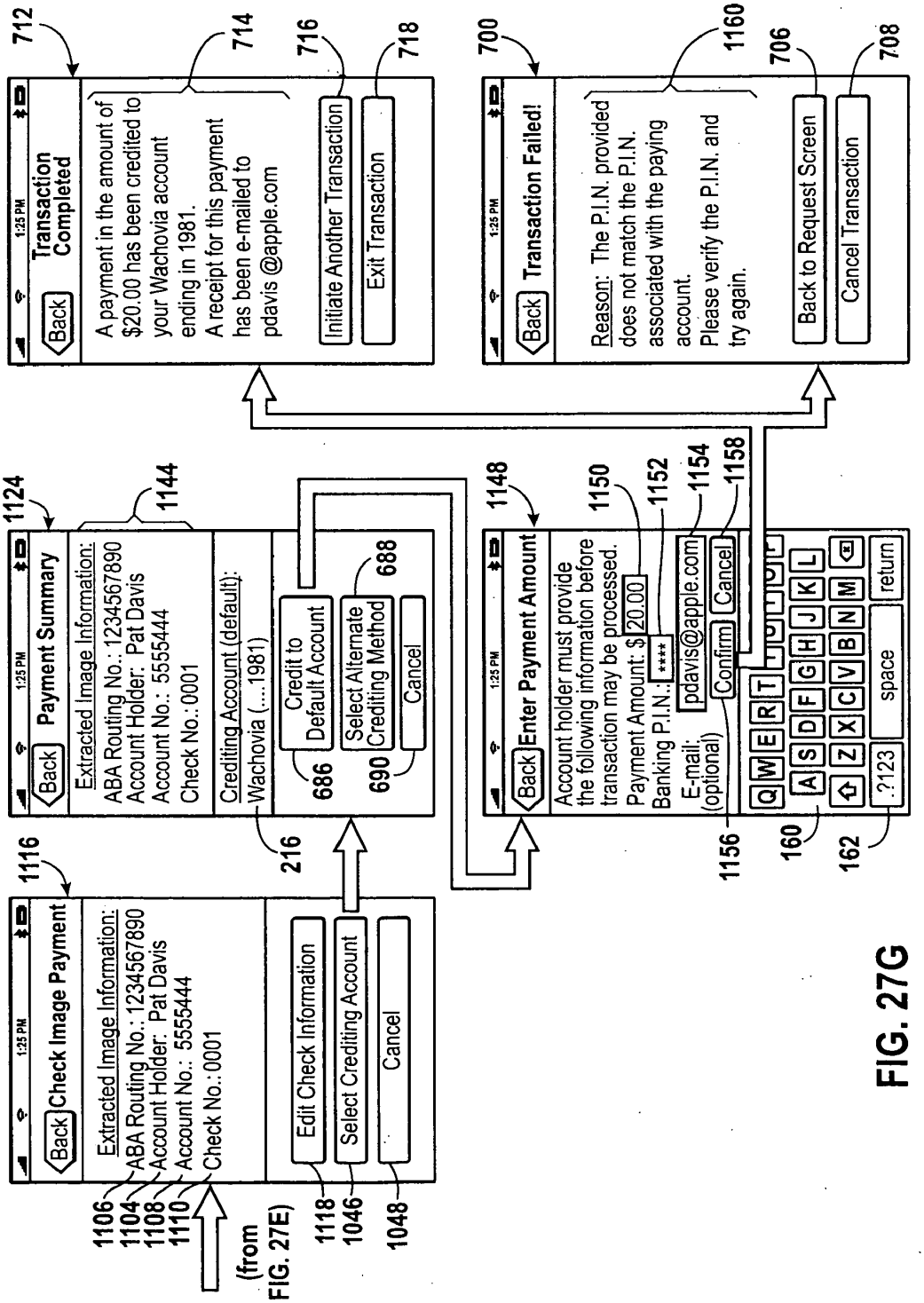
1:25 PM
Back
Check Image Payment
Extracted Image Information:
ABA Routing No.: 1234567890
Account Holder: Pat Davis
Account No.: 5555444
Check No.: 0001
Edit Check Information
Select Crediting Account
Cancel
(from FIG. 27E)
1106
1104
1108
1110
1118
1046
1048
1116
Payment Summary
Extracted Image Information:
ABA Routing No.: 1234567890
Account Holder: Pat Davis
Account No.: 5555444
Check No.: 0001
Crediting Account (default):
Wachovia (....1981)
Credit to Default Account
Select Alternate Crediting Method
Cancel
1144
1124
216
686
688
690
Enter Payment Amount
Account holder must provide the following information before transaction may be processed.
Payment Amount: $ 20.00
Banking P.I.N.: ****
E-mail: (optional) pdavis@apple.com
Confirm
Cancel
1148
1150
1152
1154
1158
1156
160
162
Transaction Completed
A payment in the amount of $20.00 has been credited to your Wachovia account ending in 1981.
A receipt for this payment has been e-mailed to pdavis @apple.com
Initiate Another Transaction
Exit Transaction
712
714
716
718
Transaction Failed!
Reason: The P.I.N. provided does not match the P.I.N. associated with the paying account.
Please verify the P.I.N. and try again.
Back to Request Screen
Cancel Transaction
700
1160
706
708

FIG. 27G

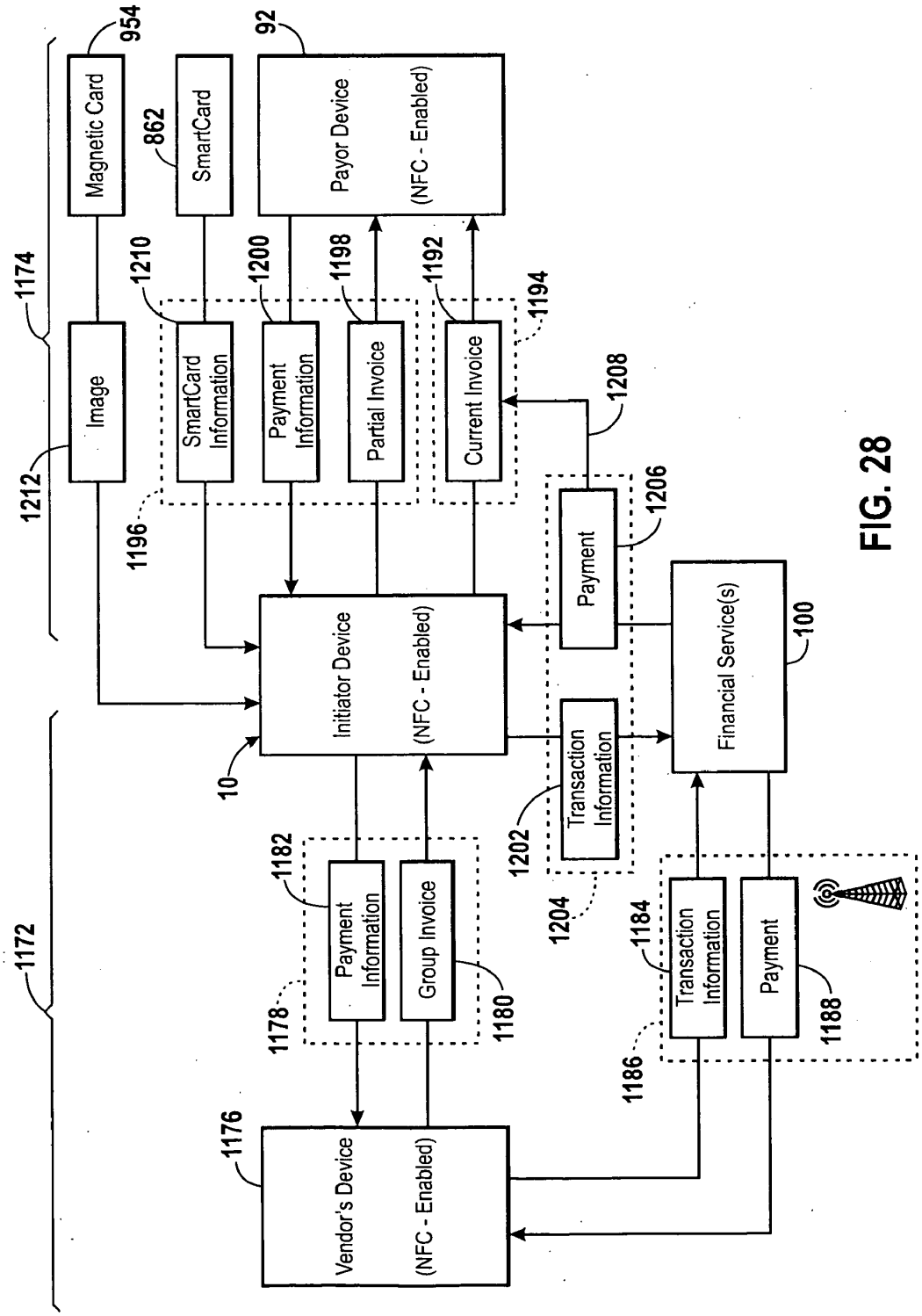
Magnetic Card
954
SmartCard
862
Payor Device
(NFC - Enabled)
92
1174
1210
1200
1198
1192
1194
Image
SmartCard Information
Payment Information
Partial Invoice
Current Invoice
1208
1212
1196
Payment
1206
Initiator Device
(NFC - Enabled)
Financial Service(s)
100
10
Transaction Information
1202
1182
Payment Information
Group Invoice
1204
1184
Transaction Information
Payment
1172
1178
1180
1186
1188
1176
Vendor's Device
(NFC - Enabled)

FIG. 28

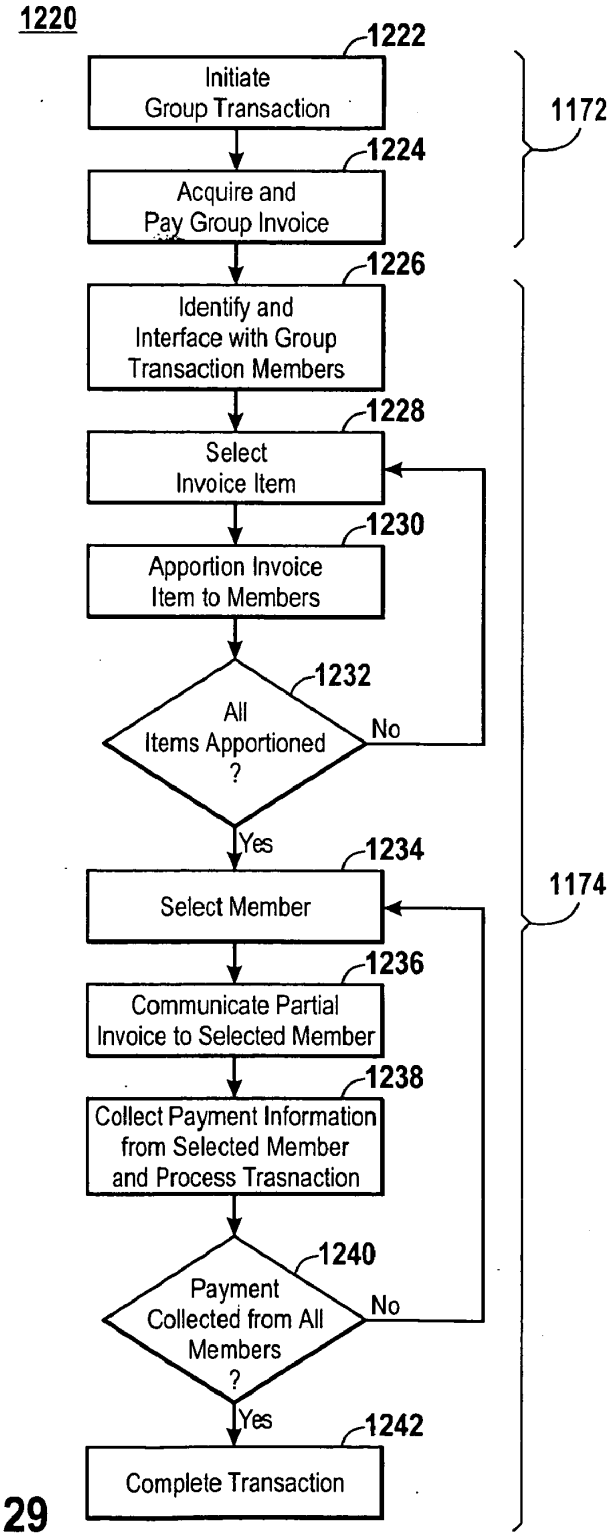
1220
1222
Initiate Group Transaction
1224
Acquire and Pay Group Invoice
1172
1226
Identify and Interface with Group Transaction Members
1228
Select Invoice Item
1230
Apportion Invoice Item to Members
1232
All Items Apportioned ?
No
Yes
1234
Select Member
1174
1236
Communicate Partial Invoice to Selected Member
1238
Collect Payment Information from Selected Member and Process Trasnaction
1240
Payment Collected from All Members ?
No
Yes
1242
Complete Transaction

FIG. 29

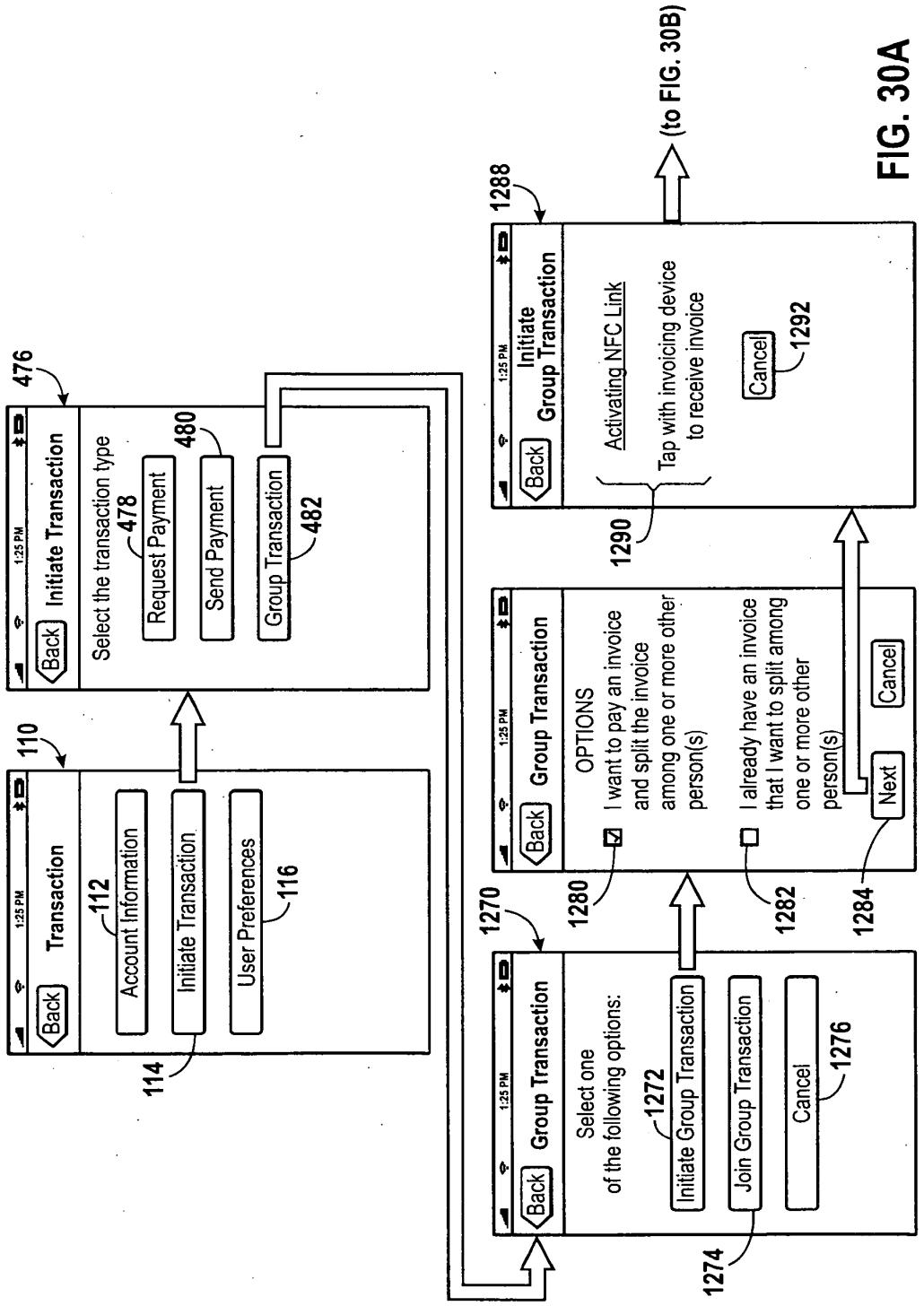
1:25 PM
Back
Transaction
Account Information
Initiate Transaction
User Preferences
110
112
114
116
Initiate Transaction
Select the transaction type
Request Payment
Send Payment
Group Transaction
476
478
480
482
Group Transaction
Select one
of the following options:
Initiate Group Transaction
Join Group Transaction
Cancel
1270
1272
1274
1276
OPTIONS
I want to pay an invoice
and split the invoice
among one or more other
person(s)
I already have an invoice
that I want to split among
one or more other
person(s)
Next
Cancel
1280
1282
1284
Initiate
Group Transaction
Activating NFC Link
Tap with invoicing device
to receive invoice
Cancel
1288
1290
1292
(to FIG. 30B)

FIG. 30A

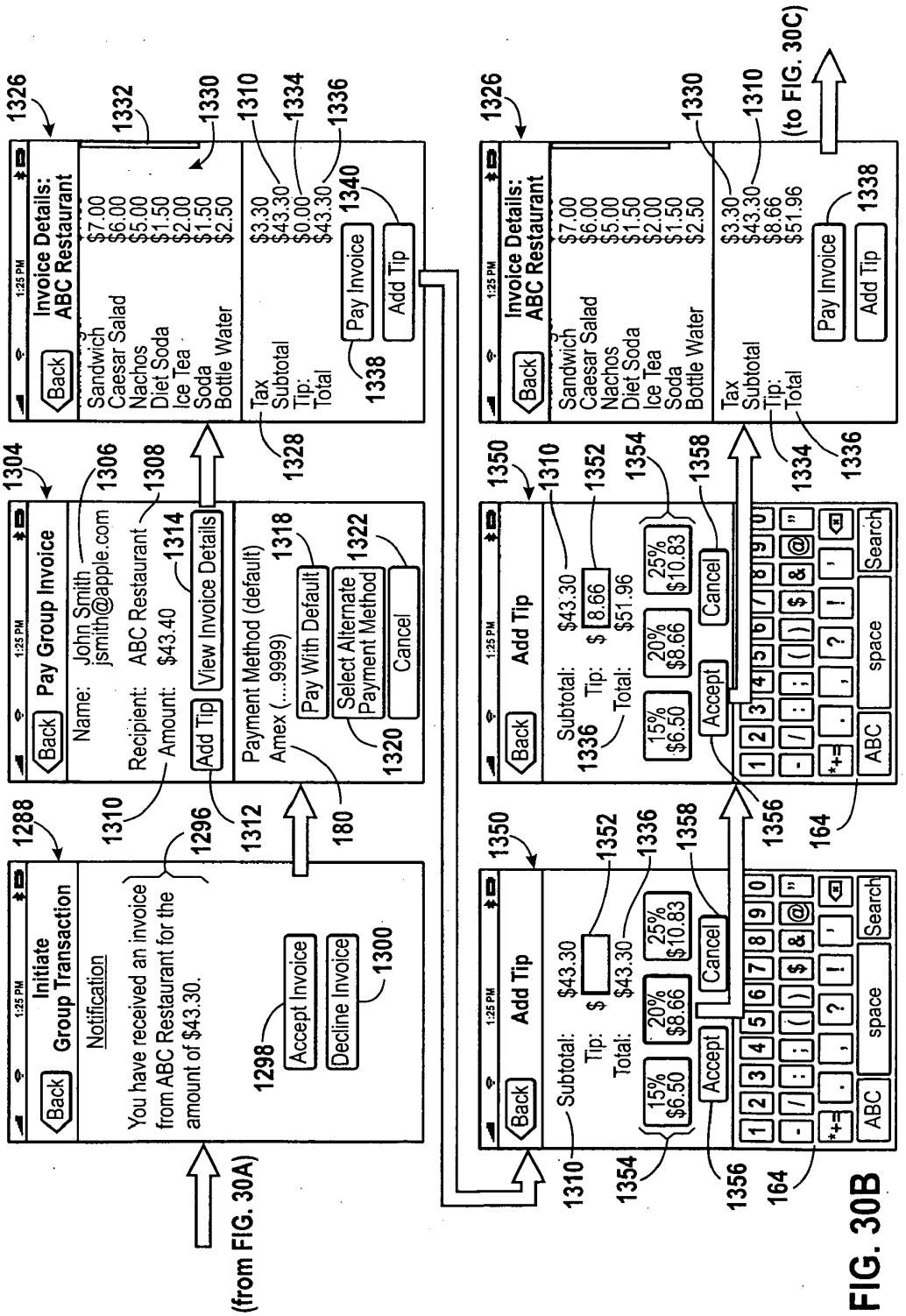
(from FIG. 30A)
1288
Initiate Group Transaction
Back
Notification
You have received an invoice from ABC Restaurant for the amount of $43.30.
1296
1298
Accept Invoice
Decline Invoice
1300
1304
Pay Group Invoice
Name: John Smith jsmith@apple.com
Recipient: ABC Restaurant
Amount: $43.40
Add Tip
View Invoice Details
Payment Method (default)
Amex (....9999)
Pay With Default
Select Alternate Payment Method
Cancel
1306
1308
1310
1312
1314
1318
1320
1322
180
1326
Invoice Details: ABC Restaurant
Sandwich $7.00
Caesar Salad $6.00
Nachos $5.00
Diet Soda $1.50
Ice Tea $2.00
Soda $1.50
Bottle Water $2.50
Tax $3.30
Subtotal $43.30
Tip: $0.00
Total $43.30
Pay Invoice
Add Tip
1328
1330
1332
1334
1336
1338
1340
1350
Add Tip
Subtotal: $43.30
Tip: $ 8.66
Total: $51.96
15% $6.50
20% $8.66
25% $10.83
Accept
Cancel
1352
1354
1356
1358
164
(to FIG. 30C)

FIG. 30B

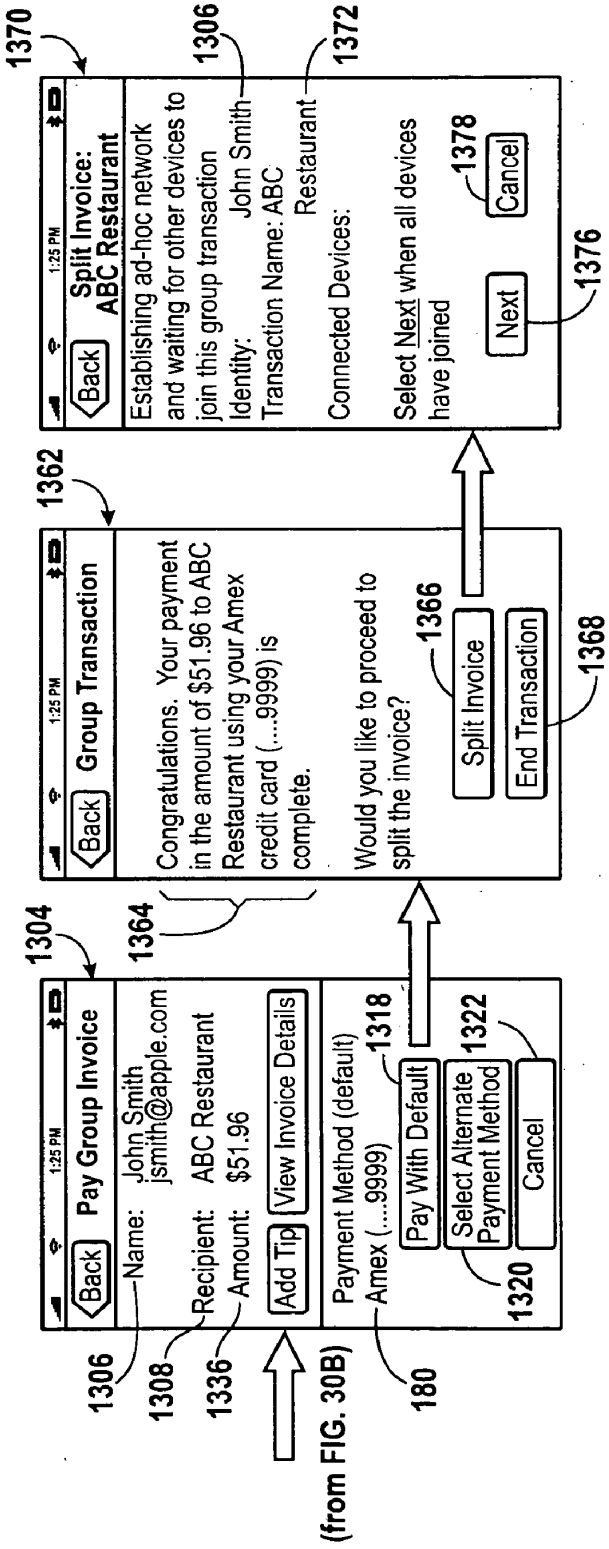
1370
1306
1372
1:25 PM
Back
Split Invoice: ABC Restaurant
Establishing ad-hoc network and waiting for other devices to join this group transaction
Identity: John Smith
Transaction Name: ABC Restaurant
Connected Devices:
Select Next when all devices have joined
Next
Cancel
1378
1376
1362
1:25 PM
Back
Group Transaction
Congratulations. Your payment in the amount of $51.96 to ABC Restaurant using your Amex credit card (....9999) is complete.
Would you like to proceed to split the invoice?
Split Invoice
End Transaction
1366
1368
1364
1304
1:25 PM
Back
Pay Group Invoice
Name: John Smith jsmith@apple.com
Recipient: ABC Restaurant
Amount: $51.96
Add Tip
View Invoice Details
Payment Method (default)
Amex (....9999)
Pay With Default
Select Alternate Payment Method
Cancel
1318
1322
1320
1306
1308
1336
180
(from FIG. 30B)

FIG. 30C

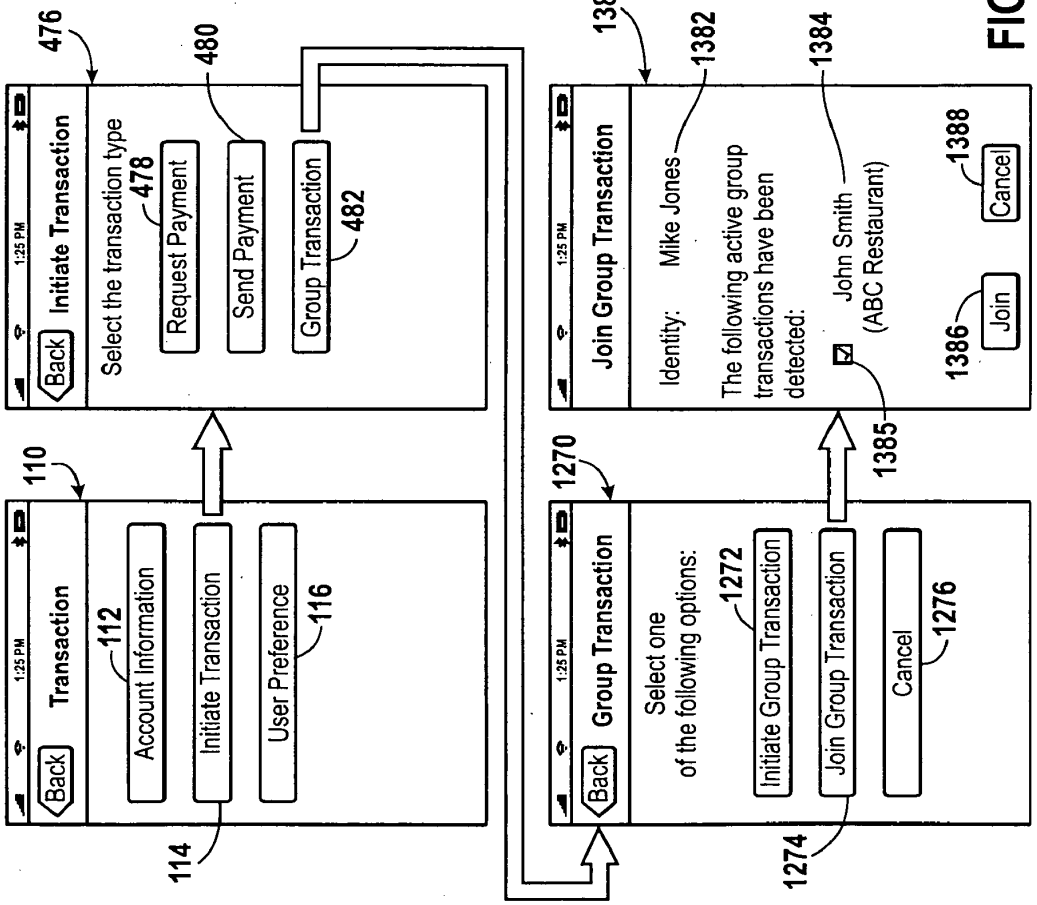
1:25 PM
Back
Transaction
110
Account Information
112
Initiate Transaction
114
User Preference
116
Initiate Transaction
476
Select the transaction type
478
Request Payment
480
Send Payment
Group Transaction
482
Group Transaction
1270
Select one
of the following options:
Initiate Group Transaction
1272
Join Group Transaction
1274
Cancel
1276
Join Group Transaction
1380
Identity:
Mike Jones
1382
The following active group
transactions have been
detected:
John Smith
(ABC Restaurant)
1384
1385
Join
1386
Cancel
1388

FIG. 30D

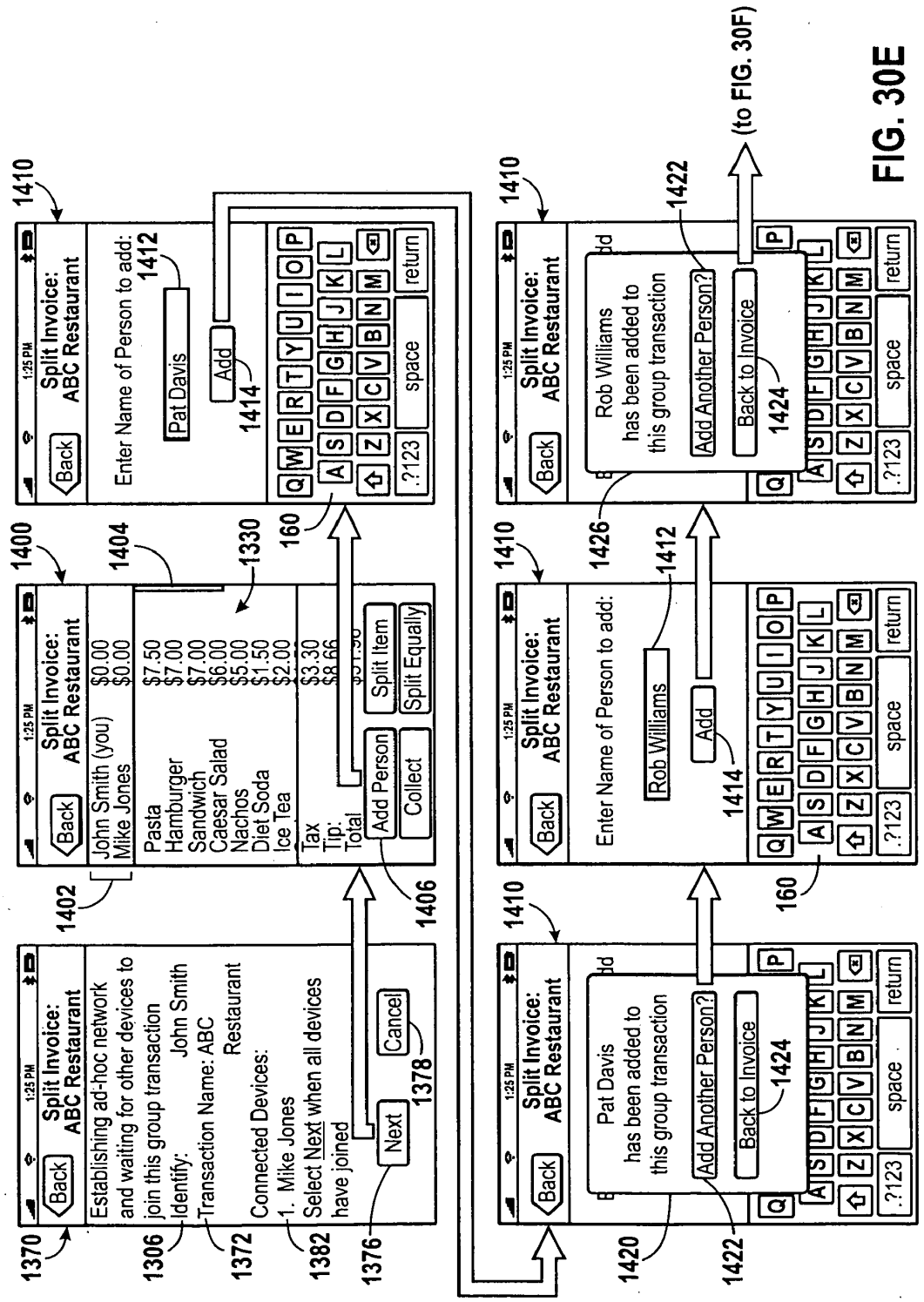
1370
Back
Split Invoice: ABC Restaurant
Establishing ad-hoc network and waiting for other devices to join this group transaction
1306
Identify: John Smith
Transaction Name: ABC Restaurant
1372
Connected Devices:
1. Mike Jones
1382
Select Next when all devices have joined
1376
Next
Cancel
1378
1400
1402
John Smith (you) $0.00
Mike Jones $0.00
1404
Pasta $7.50
Hamburger $7.00
Sandwich $7.00
Caesar Salad $6.00
Nachos $5.00
Diet Soda $1.50
Ice Tea $2.00
1330
Tax $3.30
Tip:
Total
Add Person
Split Item
Collect
Split Equally
1406
1410
Enter Name of Person to add:
1412
Pat Davis
Add
1414
160
Pat Davis has been added to this group transaction
Add Another Person?
Back to Invoice
1420
1422
1424
Rob Williams
Rob Williams has been added to this group transaction
1426
(to FIG. 30F)

FIG. 30E

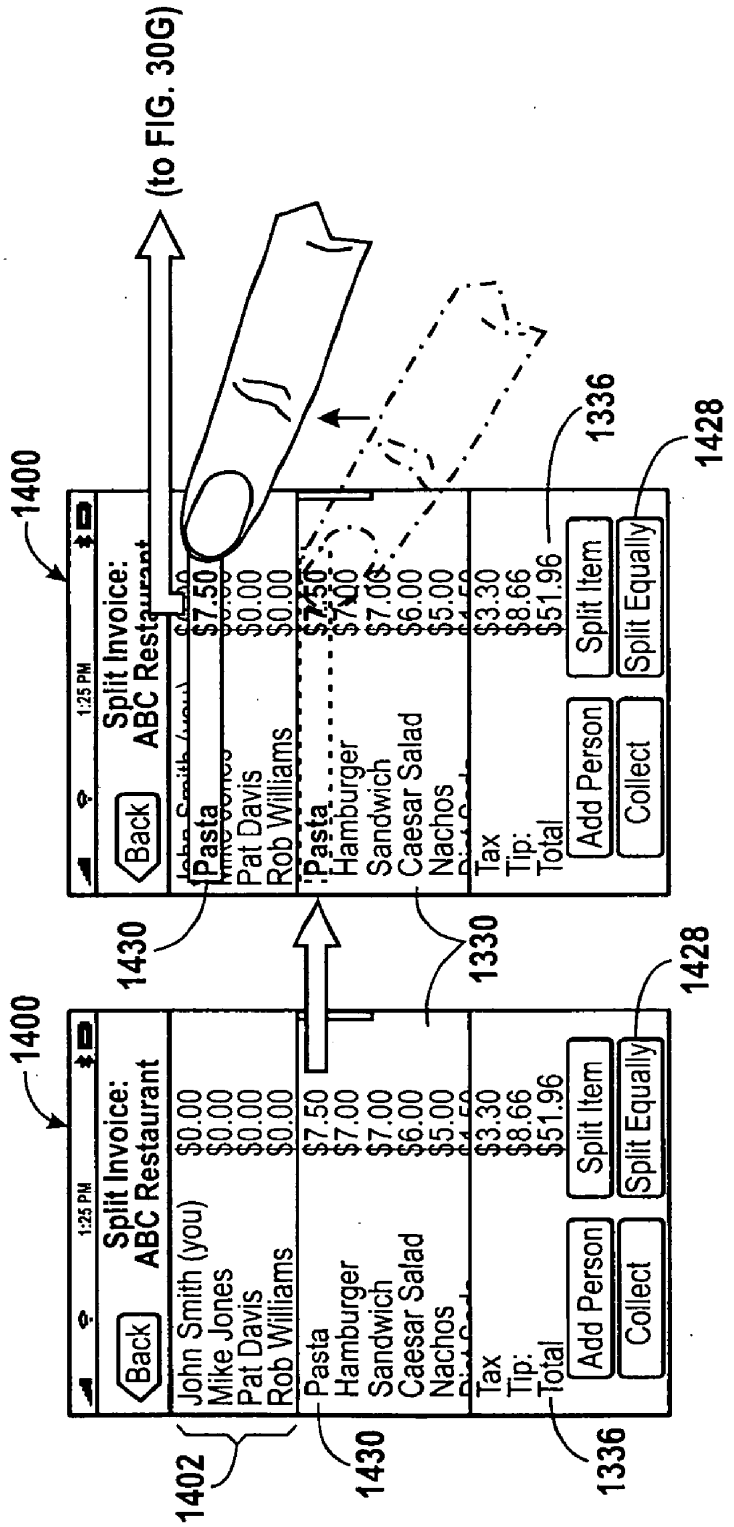
1400
1:25 PM
Back
Split Invoice:
ABC Restaurant
John Smith (you) $0.00
Mike Jones $0.00
Pat Davis $0.00
Rob Williams $0.00
Pasta $7.50
Hamburger $7.00
Sandwich $7.00
Caesar Salad $6.00
Nachos $5.00
Tax $3.30
Tip: $8.66
Total $51.96
Add Person
Collect
Split Item
Split Equally
1402
1430
1330
1336
1428
(to FIG. 30G)

FIG. 30F

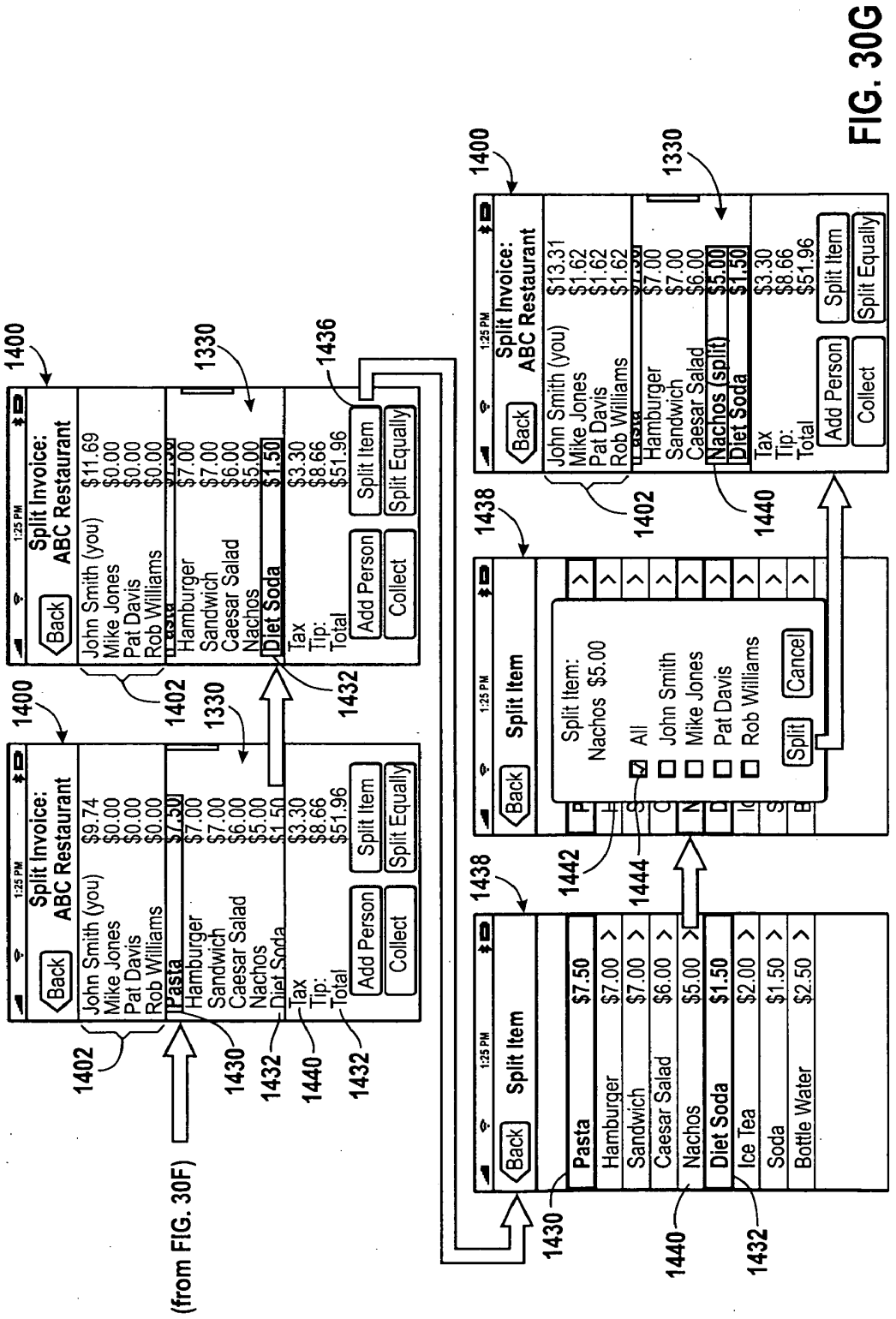
(from FIG. 30F)
1400
Back
1:25 PM
Split Invoice:
ABC Restaurant
John Smith (you) $9.74
Mike Jones $0.00
Pat Davis $0.00
Rob Williams $0.00
Pasta $7.50
Hamburger $7.00
Sandwich $7.00
Caesar Salad $6.00
Nachos $5.00
Diet Soda $1.50
Tax $3.30
Tip: $8.66
Total $51.96
Add Person
Collect
Split Item
Split Equally
1402
1330
1430
1432
1440
1436
1438
Split Item
Pasta $7.50
Hamburger $7.00
Sandwich $7.00
Caesar Salad $6.00
Nachos $5.00
Diet Soda $1.50
Ice Tea $2.00
Soda $1.50
Bottle Water $2.50
Split Item:
Nachos $5.00
All
John Smith
Mike Jones
Pat Davis
Rob Williams
Split
Cancel
1442
1444
John Smith (you) $13.31
Mike Jones $1.62
Pat Davis $1.62
Rob Williams $1.62
Nachos (split) $5.00
Diet Soda $1.50

FIG. 30G

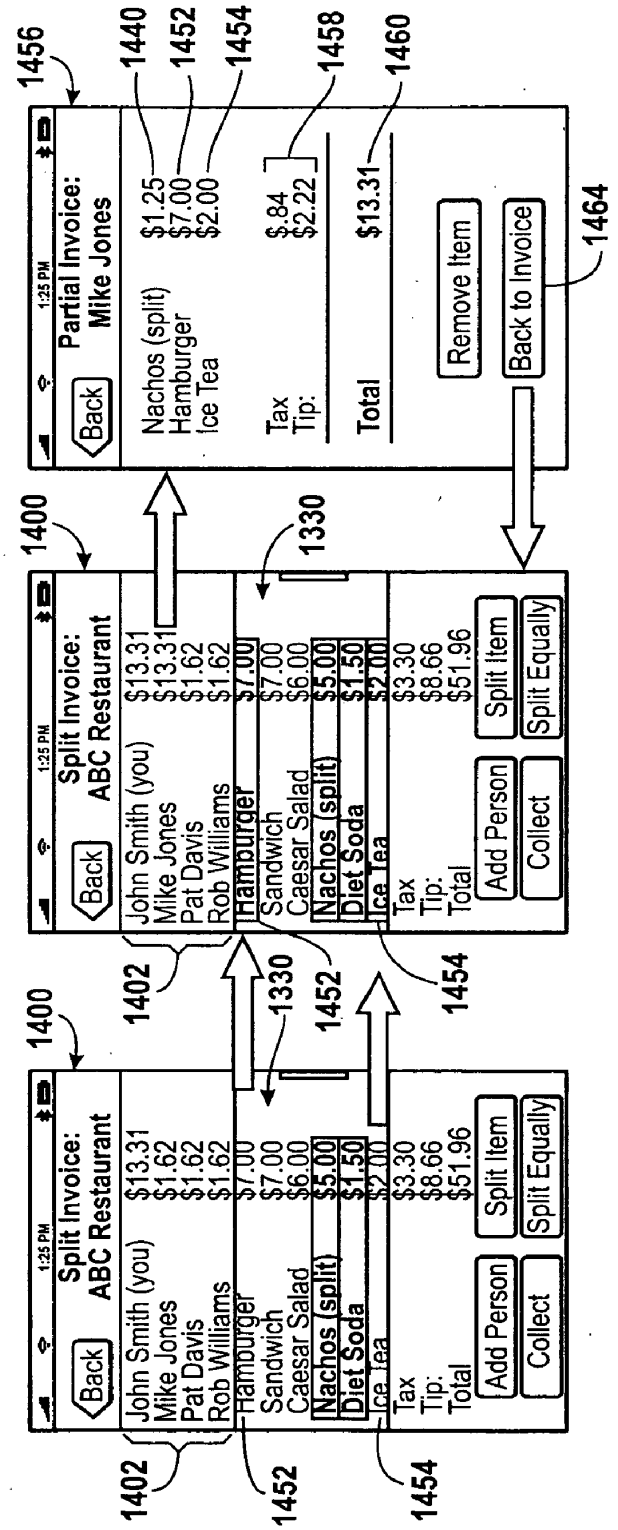
1400
Back
Split Invoice:
ABC Restaurant
1:25 PM
John Smith (you) $13.31
Mike Jones $1.62
Pat Davis $1.62
Rob Williams $1.62
Hamburger $7.00
Sandwich $7.00
Caesar Salad $6.00
Nachos (split) $5.00
Diet Soda $1.50
Ice Tea $2.00
Tax $3.30
Tip: $8.66
Total $51.96
Add Person
Collect
Split Item
Split Equally
1402
1330
1452
1454
1400
Back
Split Invoice:
ABC Restaurant
1:25 PM
John Smith (you) $13.31
Mike Jones $13.31
Pat Davis $1.62
Rob Williams $1.62
Hamburger $7.00
Sandwich $7.00
Caesar Salad $6.00
Nachos (split) $5.00
Diet Soda $1.50
Ice Tea $2.00
Tax $3.30
Tip: $8.66
Total $51.96
Add Person
Collect
Split Item
Split Equally
1402
1330
1452
1454
1456
Back
Partial Invoice:
Mike Jones
1:25 PM
Nachos (split) $1.25
Hamburger $7.00
Ice Tea $2.00
Tax $.84
Tip: $2.22
Total $13.31
Remove Item
Back to Invoice
1440
1452
1454
1458
1460
1464

FIG. 30H

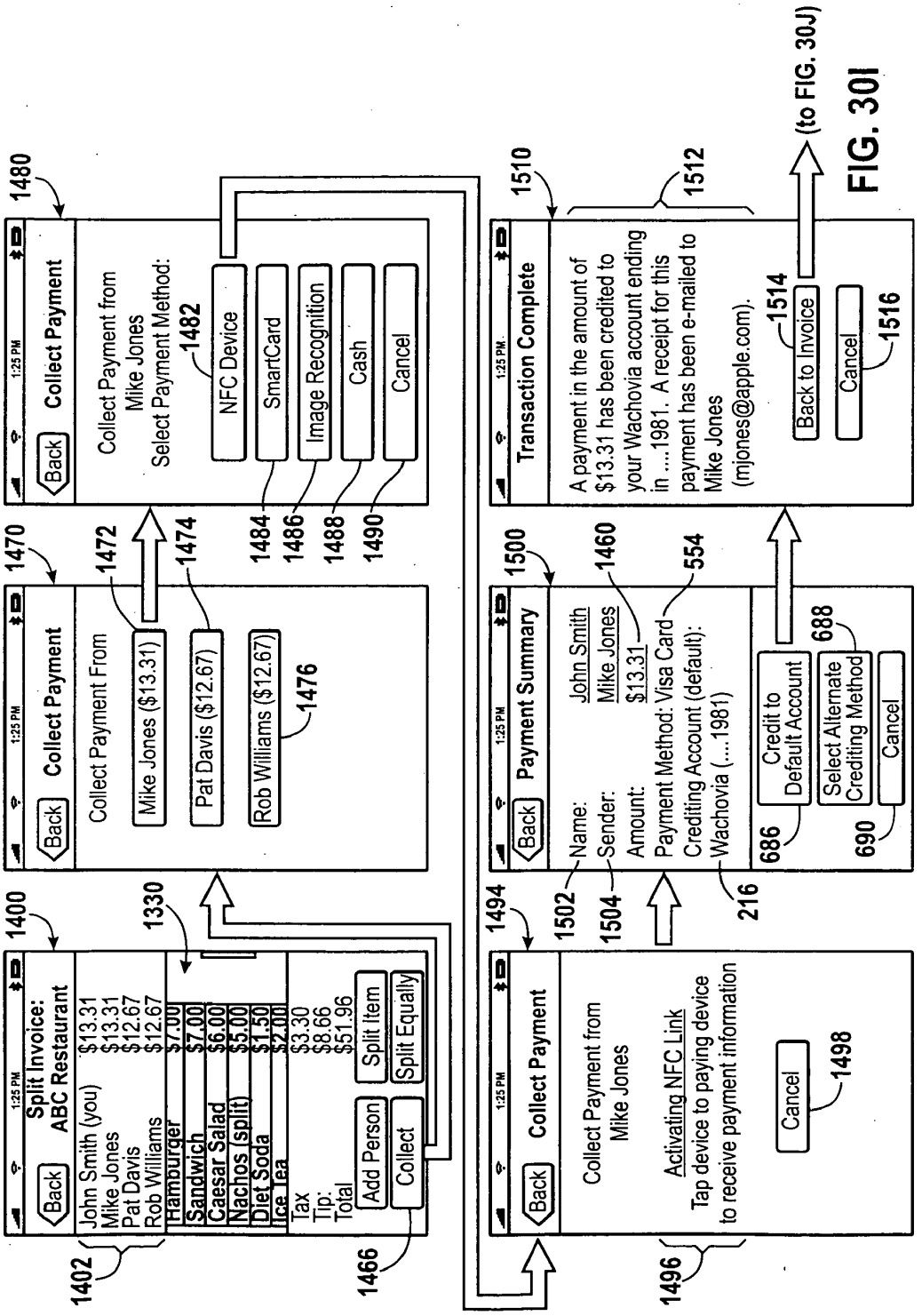
1400
1:25 PM
Back
Split Invoice:
ABC Restaurant
John Smith (you) $13.31
Mike Jones $13.31
Pat Davis $12.67
Rob Williams $12.67
Hamburger $7.00
Sandwich $7.00
Caesar Salad $6.00
Nachos (split) $5.00
Diet Soda $1.50
Ice Tea $2.00
Tax $3.30
Tip: $8.66
Total $51.96
Add Person
Split Item
Collect
Split Equally
1402
1330
1466
1470
Collect Payment
Collect Payment From
Mike Jones ($13.31)
Pat Davis ($12.67)
Rob Williams ($12.67)
1472
1474
1476
1480
Collect Payment
Collect Payment from
Mike Jones
Select Payment Method:
NFC Device
SmartCard
Image Recognition
Cash
Cancel
1482
1484
1486
1488
1490
1494
Collect Payment
Collect Payment from
Mike Jones
Activating NFC Link
Tap device to paying device
to receive payment information
Cancel
1498
1496
1500
Payment Summary
Name: John Smith
Sender: Mike Jones
Amount: $13.31
Payment Method: Visa Card
Crediting Account (default):
Wachovia (....1981)
Credit to
Default Account
Select Alternate
Crediting Method
Cancel
1502
1504
1460
554
216
686
688
690
1510
Transaction Complete
A payment in the amount of
$13.31 has been credited to
your Wachovia account ending
in ....1981. A receipt for this
payment has been e-mailed to
Mike Jones
(mjones@apple.com).
Back to Invoice
Cancel
1512
1514
1516
(to FIG. 30J)

FIG. 30I

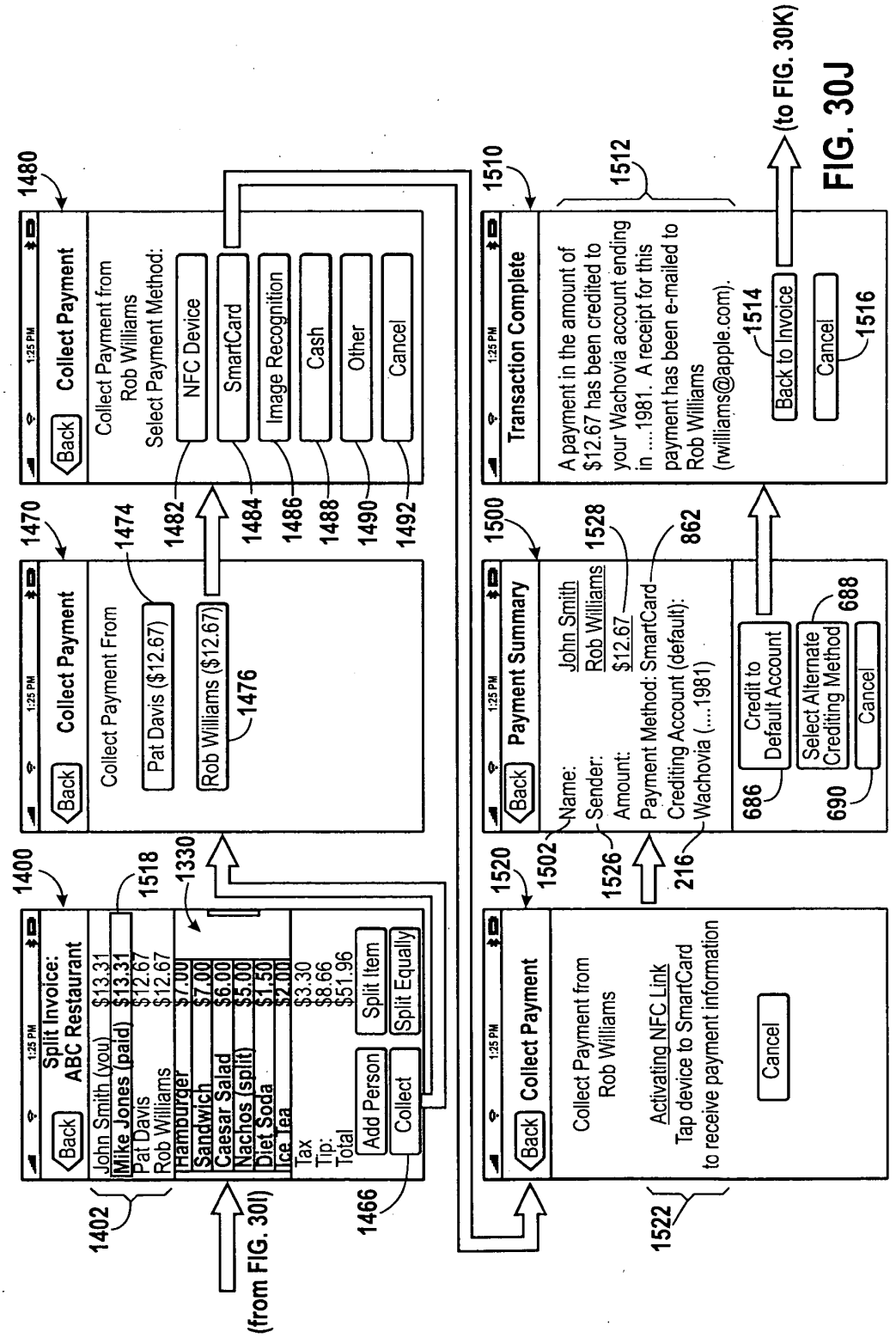
1400
Back
Split Invoice: ABC Restaurant
John Smith (you) $13.31
Mike Jones (paid) $13.31
Pat Davis $12.67
Rob Williams $12.67
Hamburger $7.00
Sandwich $7.00
Caesar Salad $6.00
Nachos (split) $5.00
Diet Soda $1.50
Ice Tea $2.00
Tax $3.30
Tip: $8.66
Total $51.96
Add Person
Split Item
Collect
Split Equally
1402
1518
1330
1466
(from FIG. 30I)
1470
Back
Collect Payment
Collect Payment From
Pat Davis ($12.67)
Rob Williams ($12.67)
1474
1476
1480
Back
Collect Payment
Collect Payment from Rob Williams
Select Payment Method:
NFC Device
SmartCard
Image Recognition
Cash
Other
Cancel
1482
1484
1486
1488
1490
1492
1500
Back
Payment Summary
Name: John Smith
Sender: Rob Williams
Amount: $12.67
Payment Method: SmartCard
Crediting Account (default):
Wachovia (....1981)
Credit to Default Account
Select Alternate Crediting Method
Cancel
1502
1526
1528
862
216
686
688
690
1510
Transaction Complete
A payment in the amount of $12.67 has been credited to your Wachovia account ending in ....1981. A receipt for this payment has been e-mailed to Rob Williams (rwilliams@apple.com).
Back to Invoice
Cancel
1512
1514
1516
(to FIG. 30K)
1520
Back
Collect Payment
Collect Payment from Rob Williams
Activating NFC Link
Tap device to SmartCard to receive payment information
Cancel
1522

FIG. 30J

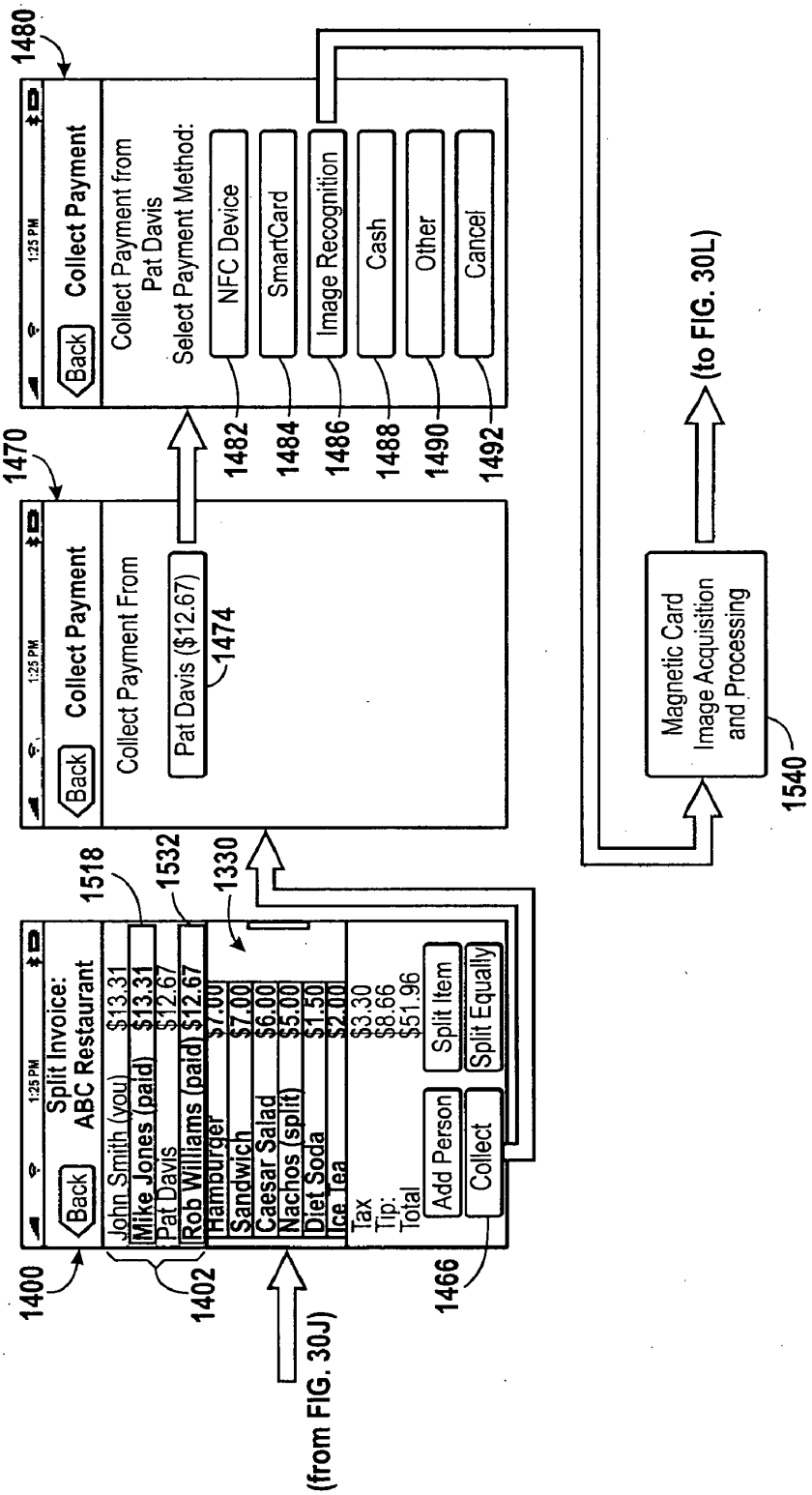
1400
Back
1:25 PM
Split Invoice:
ABC Restaurant
John Smith (you) $13.31
Mike Jones (paid) $13.31
Pat Davis $12.67
Rob Williams (paid) $12.67
1402
1518
1532
Hamburger $7.00
Sandwich $7.00
Caesar Salad $6.00
Nachos (split) $5.00
Diet Soda $1.50
Ice Tea $2.00
1330
Tax $3.30
Tip: $8.66
Total $51.96
Add Person
Split Item
Collect
Split Equally
1466
(from FIG. 30J)
1470
Back
1:25 PM
Collect Payment
Collect Payment From
Pat Davis ($12.67)
1474
1480
Back
1:25 PM
Collect Payment
Collect Payment from
Pat Davis
Select Payment Method:
NFC Device
SmartCard
Image Recognition
Cash
Other
Cancel
1482
1484
1486
1488
1490
1492
Magnetic Card
Image Acquisition
and Processing
1540
(to FIG. 30L)

FIG. 30K

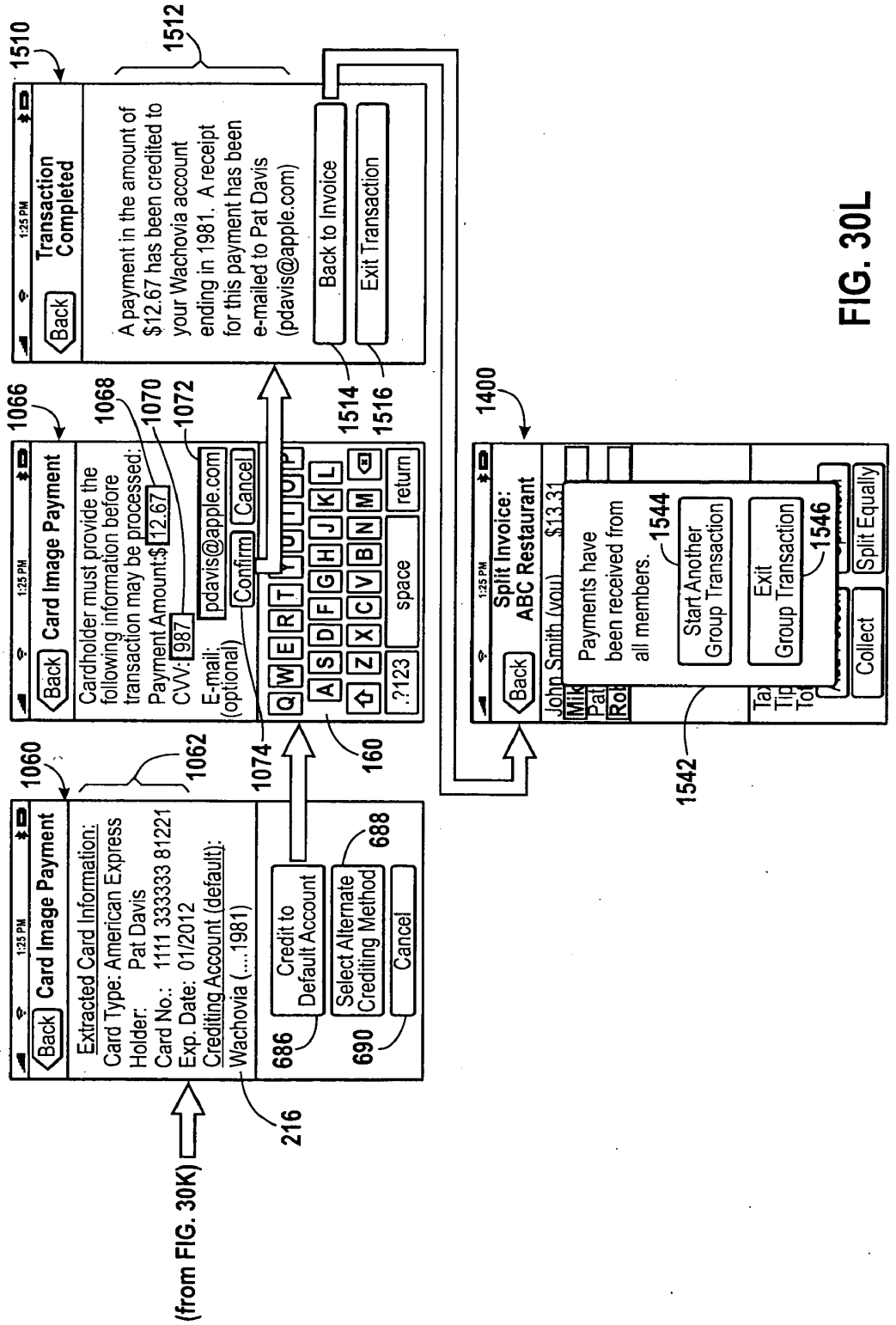
(from FIG. 30K)
1060
Card Image Payment
Back
Extracted Card Information:
Card Type: American Express
Holder: Pat Davis
Card No.: 1111 333333 81221
Exp. Date: 01/2012
Crediting Account (default):
Wachovia (....1981)
Credit to Default Account
Select Alternate Crediting Method
Cancel
1062
686
688
690
216
1066
Card Image Payment
Back
Cardholder must provide the following information before transaction may be processed:
Payment Amount:$12.67
CVV: 987
E-mail: (optional)
pdavis@apple.com
Confirm
Cancel
space
return
1068
1070
1072
1074
160
1510
Transaction Completed
Back
A payment in the amount of $12.67 has been credited to your Wachovia account ending in 1981. A receipt for this payment has been e-mailed to Pat Davis (pdavis@apple.com)
Back to Invoice
Exit Transaction
1512
1514
1516
1400
Split Invoice: ABC Restaurant
Back
John Smith (you) $13.31
Payments have been received from all members.
Start Another Group Transaction
Exit Group Transaction
Collect
Split Equally
1542
1544
1546

FIG. 30L

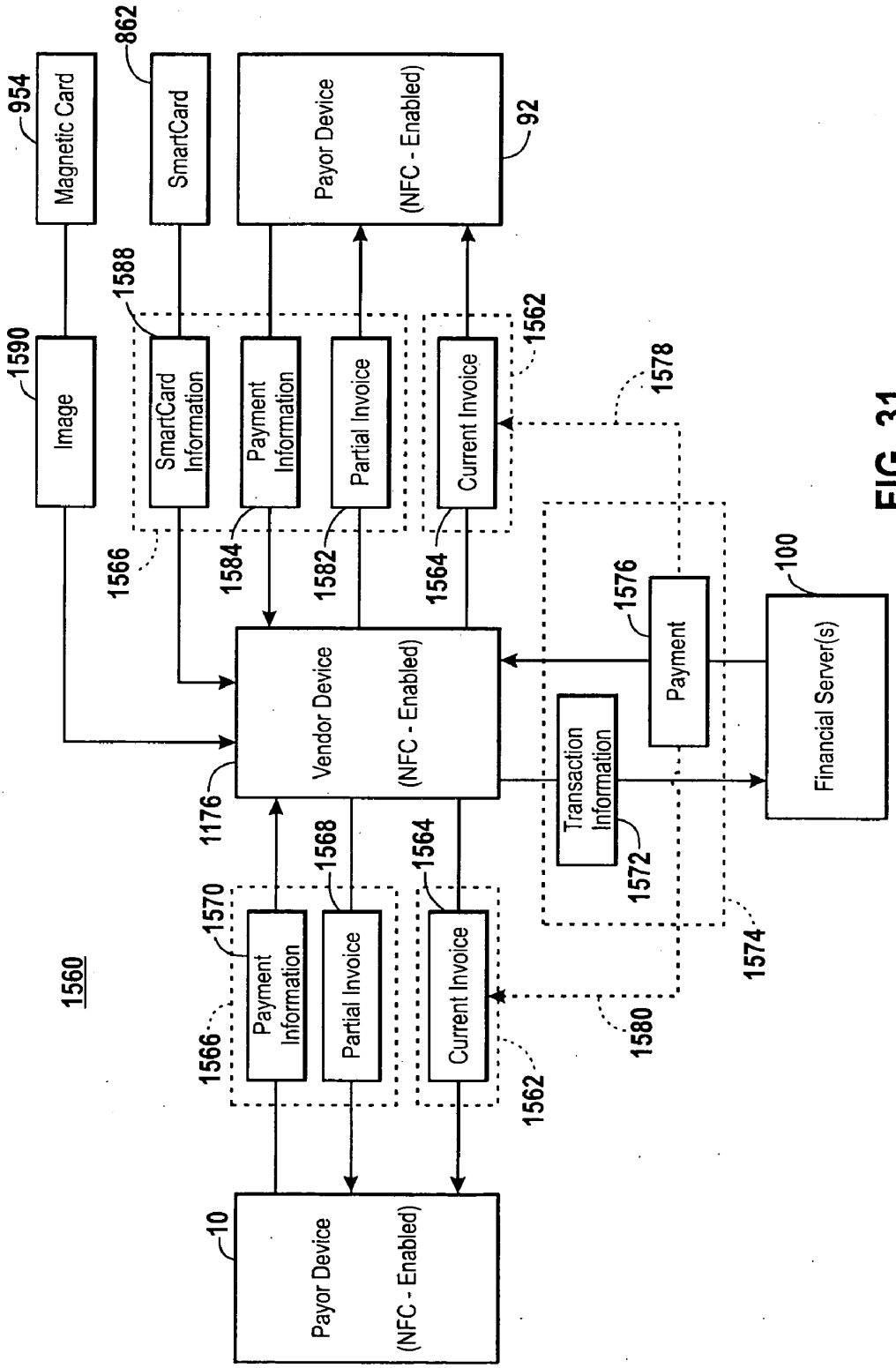
1560
954
Magnetic Card
862
SmartCard
Payor Device
(NFC - Enabled)
92
1590
Image
1588
SmartCard Information
Payment Information
Partial Invoice
Current Invoice
1562
1578
1566
1584
1582
1564
1576
Payment
100
Financial Server(s)
Vendor Device
(NFC - Enabled)
1176
Transaction Information
1572
1574
1570
Payment Information
1568
Partial Invoice
1564
Current Invoice
1566
1562
1580
10
Payor Device
(NFC - Enabled)

FIG. 31

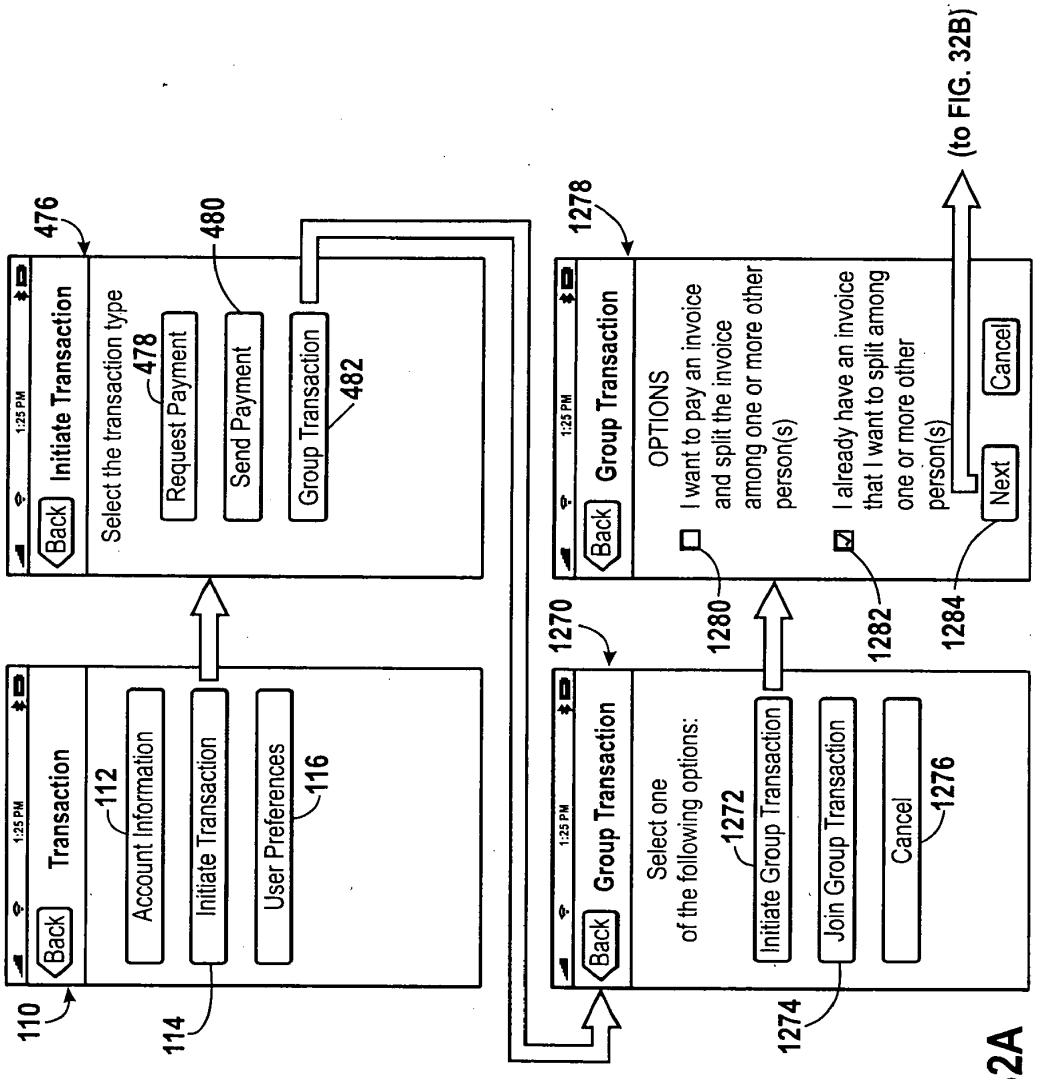
1:25 PM
Back
Transaction
110
Account Information
112
Initiate Transaction
114
User Preferences
116
Back
Initiate Transaction
476
Select the transaction type
Request Payment
478
Send Payment
480
Group Transaction
482
Back
Group Transaction
1270
Select one
of the following options:
Initiate Group Transaction
1272
Join Group Transaction
1274
Cancel
1276
Back
Group Transaction
1278
OPTIONS
I want to pay an invoice
and split the invoice
among one or more other
person(s)
1280
I already have an invoice
that I want to split among
one or more other
person(s)
1282
Next
1284
Cancel
(to FIG. 32B)

FIG. 32A

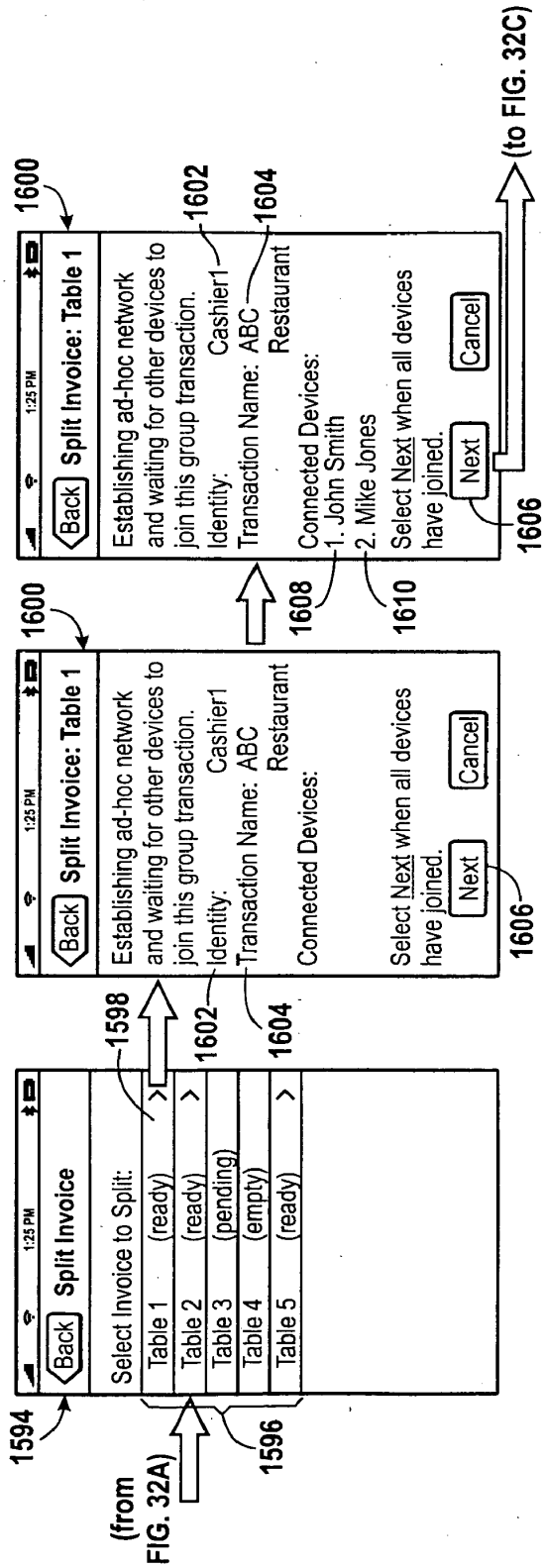
1:25 PM
Back
Split Invoice
Select Invoice to Split:
Table 1 (ready)
Table 2 (ready)
Table 3 (pending)
Table 4 (empty)
Table 5 (ready)
1594
1596
1598
(from FIG. 32A)
1:25 PM
Back
Split Invoice: Table 1
Establishing ad-hoc network and waiting for other devices to join this group transaction.
Identity: Cashier1
Transaction Name: ABC Restaurant
Connected Devices:
Select Next when all devices have joined.
Next
Cancel
1600
1602
1604
1606
1:25 PM
Back
Split Invoice: Table 1
Establishing ad-hoc network and waiting for other devices to join this group transaction.
Identity: Cashier1
Transaction Name: ABC Restaurant
Connected Devices:
1. John Smith
2. Mike Jones
Select Next when all devices have joined.
Next
Cancel
1600
1602
1604
1606
1608
1610
(to FIG. 32C)

FIG. 32B

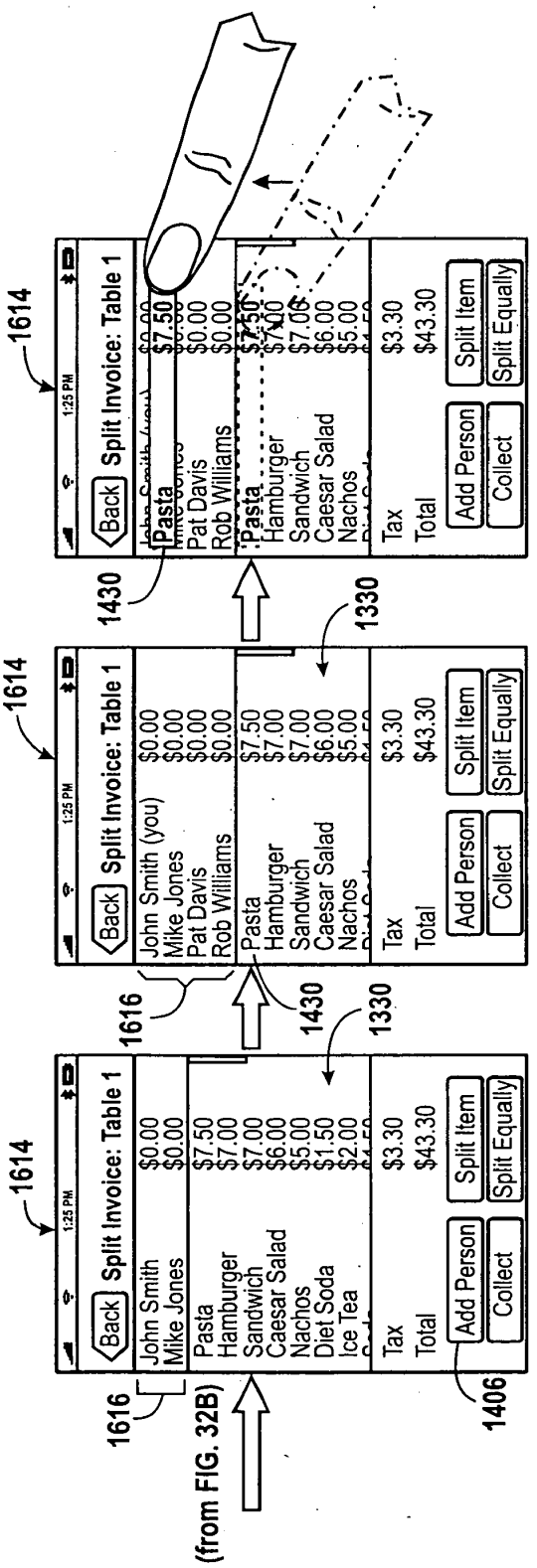
1614
1:25 PM
Back
Split Invoice: Table 1
John Smith
Mike Jones
$0.00
$0.00
Pasta
Hamburger
Sandwich
Caesar Salad
Nachos
Diet Soda
Ice Tea
$7.50
$7.00
$7.00
$6.00
$5.00
$1.50
$2.00
Tax
Total
$3.30
$43.30
Add Person
Collect
Split Item
Split Equally
1616
1406
(from FIG. 32B)
1330
John Smith (you)
Mike Jones
Pat Davis
Rob Williams
$0.00
$0.00
$0.00
$0.00
1430
Pat Davis
Rob Williams
$0.00
$0.00
$7.50
$7.06
$6.00
$5.00

FIG. 32C

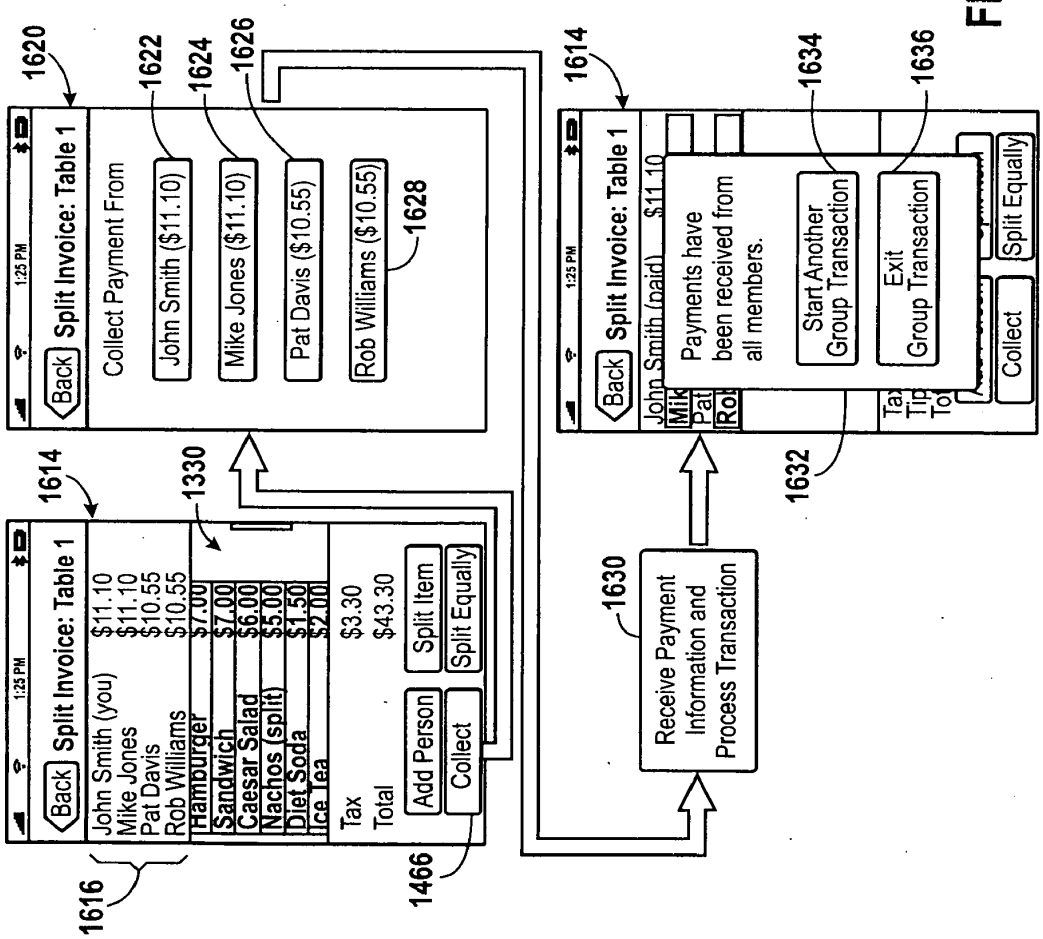
1:25 PM
Back
Split Invoice: Table 1
John Smith (you) $11.10
Mike Jones $11.10
Pat Davis $10.55
Rob Williams $10.55
Hamburger $7.00
Sandwich $7.00
Caesar Salad $6.00
Nachos (split) $5.00
Diet Soda $1.50
Ice Tea $2.00
Tax $3.30
Total $43.30
Add Person
Split Item
Collect
Split Equally
1616
1614
1330
1466
Collect Payment From
John Smith ($11.10)
Mike Jones ($11.10)
Pat Davis ($10.55)
Rob Williams ($10.55)
1620
1622
1624
1626
1628
Receive Payment Information and Process Transaction
1630
Payments have been received from all members.
Start Another Group Transaction
Exit Group Transaction
1632
1634
1636

FIG. 32D

PEER-TO-PEER FINANCIAL TRANSACTION DEVICES AND METHODS

BACKGROUND

[0001] 1. Technical Field

[0002] Embodiments of the present disclosure relate generally to peer-to-peer transactions and, more particularly, to various systems, methods, and electronic devices configured to initiate and process such transactions.

[0003] 2. Description of the Related Art

[0004] This section is intended to introduce the reader to various aspects of art that may be related to various aspects of the present techniques, which are described and/or claimed below. This discussion is believed to be helpful in providing the reader with background information to facilitate a better understanding of the various aspects of the present disclosure. Accordingly, it should be understood that these statements are to be read in this light, and not as admissions of prior art.

[0005] Many payment instruments currently exist and may be used to carry out financial exchanges between two or more parties. For instance, payments may be made using credit cards, debit cards, checks, electronic checks, and cash. In recent years, the growth of electronic commerce has at least partially attributed to the popularity of credit cards, debit cards, and other non-currency based payment instruments. Further, because a consumer may not always have a precise amount of cash on hand to pay an outstanding invoice or bill, such as to a vendor or retailer, it may, at times, be more convenient to charge the owed amount to the consumer's credit card.

[0006] As we move to a more mobile and fast-paced society, the use of cash or currency is being increasingly replaced by electronic transactions using credit cards, debit cards, etc. Accordingly, it is not uncommon for consumers to hold multiple non-currency accounts concurrently (e.g., multiple credit cards or debits cards corresponding to a respective banking provider), each of which may be dedicated for a particular type of purchase or financial exchange. For example, a consumer may concurrently hold a credit card account that may be dedicated for gas or automotive purchases, a credit card account specifically for travel-related purchases, a general purpose credit card account for miscellaneous purchases, as well as one or more loyalty credit card accounts that may be used only with specific retailers or vendors. In addition, the consumer may also hold, concurrently, one or more debit card accounts associated with respective banking providers.

[0007] As can be appreciated, the consumer may make payments or participate in financial exchanges using any of the above-discussed accounts by way of a payment instrument representing the account, such as a credit card. As the number of payment accounts held by the consumer increases, however, it may become increasingly inconvenient to carry such a large number of credit/debit cards. Further, while payments made using the above-discussed accounts may be readily compatible with retailer and vendor businesses, including those established online on the Internet, payments made from these accounts may not always be readily accepted by other consumers or "peers."

SUMMARY

[0008] Certain aspects of embodiments disclosed herein by way of example are summarized below. It should be understood that these aspects are presented merely to provide the reader with a brief summary of the various techniques disclosed and/or claimed herein might take and that these aspects are not intended to limit the scope of any technique disclosed and/or claimed herein. Indeed, any technique disclosed and/or claimed herein may encompass a variety of aspects that may not be set forth below.

[0009] The present disclosure generally relates to various techniques for performing peer-to-peer transactions using a portable device. In accordance with one disclosed embodiment, a portable electronic device may be configured to store information representing one or more accounts held by a user. For instance, the stored information may represent one or more credit card accounts held by the user. As used in the present disclosure, the term "credit card" shall be understood to encompass any type of card, including those in conformance with the ISO 7810 standard, such as credit cards, debit cards, charge cards, gift cards, or the like. In one embodiment, a credit card may store a user's account information using a magnetic stripe encoded on the card (e.g., ISO 7813 standard). In other embodiments, as will be described below, a credit card may include a storage device (e.g., in addition to the above-mentioned magnetic stripe) configured to store the user's account information. The portable device may also be configured to store information relating to one or more bank accounts held by the user.

[0010] The portable device may also be provided one or more communication interfaces configured to send or transmit information stored on the device. For example, based on inputs or commands received from the user, the portable device may be configured to initiate payments (e.g., as a payor) by transmitting payment information corresponding to a credit account stored on the device, for example, to an external device (e.g., as a payee). In one embodiment, the receiving device may be a similar portable electronic device. Additionally, the device may be configured to receive payment information from the external device and to initiate a transaction request in order to process the received payment information, such that a corresponding payment is credited to an appropriate account stored on the device (e.g., a bank account). For instance, the transaction request may include communicating with one or more external servers configured to provide an authorization for the requested transaction.

[0011] The electronic device may further include one or more input device, such as a camera device, as well as a plurality of communication interfaces, which may include a near field communication (NFC) interface. In accordance with one embodiment, the device may initiate the sending and receiving of payment information with the external device using the NFC interface by way of an NFC handshake operation. Additionally, the electronic device also may use a device identification networking protocol to establish a communication link with the external device in order to receive or send payment information.

[0012] In a further embodiment, the electronic device may include an image processing application for processing an image to extract information. For instance, using the camera input device discussed above, an image of a payor's payment instrument, which may include a credit card, check, etc., may be acquired. The acquired image may be processed in order to extract and determine information relating to the payment account represented by the payment instrument. Thus, the electronic device may transmit a request including the extracted payment account information to one or more finan-

cial servers for the authorization of a payment using the extracted information. Accordingly, the presently described techniques, which may include methods, systems, and devices, may provide for a convenient method and system for performing peer-to-peer financial exchanges, as well as provide for a single transaction point for the sending and receiving payments, thus reducing or eliminating the need for the user to carry each physical payment instruments (e.g., multiple credit/debit cards).

[0013] The presently described techniques may also provide one or more systems for performing a group transaction including a plurality of group transaction members may be provided. In one embodiment, the group transaction members may include an initiator operating the electronic device. The initiator may initiate a primary transaction to pay the entirety of a group invoice containing amounts owed by each of the group transaction members. Thereafter, the initiator may perform one or more secondary transactions with each of the remaining group transaction members to collect the respective amounts owed. As can be appreciated, the collection of the outstanding payments may be performed using one or more of the communication or image processing techniques briefly explained above. Also, in a further embodiment, the initiator may be the originator of the invoice and directly collect payments corresponding to amounts owed by the group transaction members (e.g., without the above-discussed primary transaction).

[0014] The electronic device may further be provided an application, such as a computer program stored on one or more machine-readable media, adapted to provide the functions discussed above. In one embodiment, the device may include a display and the application may provide for a graphical user interface viewable on the display. By way of the graphical interface, the user may operate the device to perform one or more of the above-mentioned functions, which will be described in further detail below.

[0015] Various refinements of the features noted above may exist in relation to various aspects of the present disclosure. Further features may also be incorporated in these various aspects as well. These refinements and additional features may exist individually or in any combination. For instance, various features discussed below in relation to one or more of the illustrated embodiments may be incorporated into any of the above-described aspects of the present disclosure alone or in any combination. Again, the brief summary presented above is intended only-to familiarize the reader with certain aspects and contexts of embodiments of the present disclosure without limitation to the claimed subject matter.

DESCRIPTION OF THE DRAWINGS

[0016] These and other features, aspects, and advantages of the present disclosure will become better understood when the following detailed description of certain exemplary embodiments is read with reference to the accompanying drawings in which like characters represent like parts throughout the drawings, wherein:

[0017] FIG. **1** is a front view of an electronic device in accordance with one embodiment;

[0018] FIG. **2** is a rear view of the electronic device illustrated in FIG. **1**;

[0019] FIG. **3** is a simplified block diagram depicting components which may be used in the electronic device illustrated in FIG. **1**;

[0020] FIG. **4** is a block diagram illustrating the processing of a peer-to-peer transaction between the device of FIG. **1** and an external device in communication with the device of FIG. **1**, wherein the device of FIG. **1** acts as a payee device, and wherein the external device acts as a payor device in the accordance with one embodiment;

[0021] FIG. **5**A shows a plurality of screens that may be displayed on the device of FIG. **1** illustrating a method for storing credit card information into the device of FIG. **1**;

[0022] FIG. **5**B shows a plurality of screens that may be displayed on the device of FIG. **1** illustrating a method for verifying the credit card information entered in FIG. **5**A;

[0023] FIG. **6**A shows a plurality of screens that may be displayed on the device of FIG. **1** illustrating a method of storing banking information into the device of FIG. **1**;

[0024] FIG. **6**B shows a plurality of screens that may be displayed on the device of FIG. **1** illustrating a method for verifying the banking information stored in FIG. **6**A;

[0025] FIG. **7** shows a plurality of screens that may be displayed on the device of FIG. **1** illustrating a method for configuring a default payment account on the device of FIG. **1**;

[0026] FIG. **8** shows a plurality of screens that may be displayed on the device of FIG. **1** illustrating a method for configuring a default crediting account on the device of FIG. **1**;

[0027] FIG. **9** shows a plurality of screens that may be displayed on the device of FIG. **1** illustrating a method for configuring an authorization PIN code in accordance with one embodiment;

[0028] FIGS. **10**A and **10**B show a plurality of screens that may be displayed on the device of FIG. **1** illustrating a method for locking and unlocking a transaction application stored on the device of FIG. **1** in accordance with one embodiment;

[0029] FIG. **11**A depicts a flowchart illustrating a method of operating the payee device of FIG. **4** to initiate a transaction in accordance with one embodiment;

[0030] FIG. **11**B depicts a flowchart illustrating a method of operating the payor device of FIG. **4** to respond to the transaction initiated by the method of FIG. **11**A in accordance with one embodiment;

[0031] FIGS. **12**A-**12**C are schematic representations of systems adapted to carry out various types of transactions that may be performed between the payee and payor devices of FIG. **4** in accordance with aspects of the present technique;

[0032] FIG. **13** is a schematic representation illustrating a communication process that may occur between the payee and payor devices of FIG. **4** during the transactions depicted by FIGS. **12**A-**12**C;

[0033] FIG. **14**A shows a plurality of screens that may be displayed on the device of FIG. **1** illustrating a method for initiating a payment request to be transmitted to a payor device in accordance with one embodiment;

[0034] FIG. **14**B shows a plurality of screens depicting the transmission of the payment request of FIG. **14**A from the payee device to the payor device using an established communication channel;

[0035] FIGS. **14**C and **14**D illustrate the establishment of the communication channel of FIG. **14**B;

[0036] FIGS. **14**E-**14**G show a plurality of screens that may be displayed on payor device illustrating various methods for selecting a payment account in response to the payment request of FIG. **14**A;

[0037] FIG. **14**H shows a plurality of screens that may be displayed on the payor device for initiating the transmission of the payment account information selected in FIG. **14**E to the payee device;

[0038] FIG. **14**I shows a plurality of screens depicting the transmission of the payment account information selected in FIG. **14**E to from the payor device to the payee device using the established communication channel of FIG. **14**B;

[0039] FIG. **14**J shows a plurality of screens that may be displayed on the payee device illustrating a method for selecting a crediting account and completing the transaction originally initiated in FIG. **14**A;

[0040] FIG. **15**A depicts one or more steps of the method illustrated in FIG. **11**A in further detail in accordance with the transactions depicted in FIGS. **12**A-**12**C;

[0041] FIG. **15**B depicts certain steps of the method illustrated in FIG. **11**B in accordance with the transactions depicted in FIGS. **12**A-**12**C;

[0042] FIG. **16**A depicts a flowchart illustrating a method in which the payor device of FIG. **4** is operated to initiate a transaction in accordance with one embodiment;

[0043] FIG. **16**B depicts a flowchart illustrating a method in which the payee device of FIG. **4** is operated to respond to the transaction initiated in FIG. **16**A in accordance with one embodiment;

[0044] FIG. **17**A shows a plurality of screens that may be displayed on a payor device illustrating a method for initiating a transaction in accordance with the methods described in FIGS. **16**A-**16**B in accordance with one embodiment;

[0045] FIG. **17**B shows a plurality of screens that may be displayed on a payee device illustrating a method for selecting a crediting account and completing the transaction initiated by FIG. **17**A;

[0046] FIG. **18** is a schematic representation of a system adapted to carry out a transaction in which a selected payment account includes a non-cash account in accordance with one embodiment;

[0047] FIGS. **19**A and **19**B show a plurality of screens that may be displayed on a payor device illustrating a method for selecting the non-cash account of FIG. **18** as a payment account and initiating a transaction in accordance with one embodiment;

[0048] FIG. **19**C shows a plurality of screens that may be displayed on a payee device illustrating a method for selecting a non-cash crediting account in accordance with one embodiment;

[0049] FIG. **19**D shows a plurality of screens that may be displayed on a payee device illustrating a method for selecting a crediting account and completing the transaction initiated in FIG. **19**A;

[0050] FIG. **20** is a schematic representation of a system adapted to carry out a transaction in which a selected payment account is provided by a smart card;

[0051] FIG. **21**A depicts one or more steps of the method illustrated in FIG. **11**A in further detail in accordance with the transaction depicted in FIG. **20**;

[0052] FIG. **21**B depicts certain steps of the method illustrated in FIG. **11**B in accordance with the transaction depicted in FIG. **20**;

[0053] FIG. **22**A shows a plurality of screens that may be displayed on a payee device of FIG. **18** illustrating a method for receiving payment information stored on the smart card of FIG. **18** in accordance with one embodiment;

[0054] FIG. **22**B illustrates the establishment of the communication channel between the payee device and the smart card of FIG. **18** for the transmission of the payment information in FIG. **22**A;

[0055] FIG. **22**C illustrates a plurality of screens that may be displayed on a payee device illustrating a method for selecting a crediting account and completing the transaction initiated in FIG. **22**A;

[0056] FIG. **23** is a schematic representation of a system adapted to carry out a transaction in which a selected payment account is provided using a magnetic credit card provided by the payor in accordance with one embodiment;

[0057] FIG. **24** is a schematic representation of a system adapted to carry out a transaction in which a selected payment account is provided using a check provided by the payor in accordance with one embodiment;

[0058] FIG. **25**A depicts one or more steps of the method illustrated in FIG. **11**A in further detail in accordance with the transactions depicted in FIGS. **23** and **24**;

[0059] FIG. **25**B depicts one or more steps of the method illustrated in FIG. **11**B in further detail in accordance with the transactions depicted in FIGS. **23** and **24**;

[0060] FIG. **26**A shows a plurality of screens that may be displayed on a payee device illustrating a method for acquiring an image of the credit card of FIG. **23** in accordance with one embodiment;

[0061] FIG. **26**B depicts a technique for processing the image acquired in FIG. **26**A for the extraction of payment information;

[0062] FIG. **26**C shows a plurality of screens that may be displayed on a payee device illustrating a method for editing information obtained by the image processing step depicted in FIG. **26**B;

[0063] FIG. **26**D shows a plurality of screens that may be displayed on a payee device illustrating a method for selecting a crediting account and completing the transaction initiated in FIG. **22**A;

[0064] FIGS. **27**A and **27**B show a plurality of screens that may be displayed on a payee device illustrating a method for acquiring an image of the check in FIG. **24** in accordance with one embodiment;

[0065] FIG. **27**C depicts a technique for processing the image acquired in FIG. **27**B for the extraction of payment information;

[0066] FIG. **27**D shows a plurality of screens that may be displayed on a payee device illustrating a method for selecting a crediting account and completing the transaction initiated in FIG. **27**A;

[0067] FIG. **27**E shows a plurality of screens that may be displayed on a payee device illustrating a method for acquiring an image of the check in FIG. **24** in accordance with a further embodiment;

[0068] FIG. **27**F depicts a technique for processing the image acquired in FIG. **27**E for the extraction of payment information;

[0069] FIG. **27**G shows a plurality of screens that may be displayed on a payee device illustrating a method for selecting a crediting account and completing the transaction initiated in FIG. **27**A based on the image acquired in FIG. **27**E;

[0070] FIG. **28** is a schematic representation of a system adapted to carry out a group transaction including multiple payors in accordance with one embodiment;

[0071] FIG. **29** depicts a flowchart illustrating a method of for performing the group transaction of FIG. **28**;

[0072] FIG. **30**A shows a plurality of screens that may be displayed on an initiator device illustrating a method for initiating a primary portion of the group transaction of FIG. **28**;

[0073] FIGS. **30**B and **30**C show a plurality of screens that may be displayed on an initiator device illustrating a method for completing the primary transaction initiated in FIG. **30**A and further initiating a secondary portion of the group transaction;

[0074] FIG. **30**D shows a plurality of screens that may be displayed on an payor device illustrating a method for joining the group transaction of FIG. **28**;

[0075] FIG. **30**E shows a plurality of screens that may be displayed on an initiator device illustrating a technique for adding additional transaction members to the group transaction depicted in FIG. **28**;

[0076] FIG. **30**F shows a plurality of screens that may be displayed on an initiator device illustrating a technique for apportioning invoice items to a group transaction member;

[0077] FIG. **30**G shows a plurality of screens that may be displayed on an initiator device illustrating a technique for apportioning invoice items to two or more group transaction members;

[0078] FIG. **30**H shows a plurality of screens that may be displayed on an initiator device illustrating a method for viewing a partial invoice in accordance with one embodiment;

[0079] FIGS. **30**I-**30**L show a plurality of screens that may be displayed on an initiator device illustrating methods for collecting payments from each of the group transaction members in accordance with one embodiment;

[0080] FIG. **31** is a schematic representation of a system adapted to carry out a transaction including multiple payors in accordance one embodiment;

[0081] FIGS. **32**A and **32**B show a plurality of screens that may be displayed on a vendor device illustrating a methods for initiating the group transaction of FIG. **31**;

[0082] FIG. **32**C shows a plurality of screens that may be displayed on an vendor device illustrating a technique for apportioning invoice items to a group transaction member; and

[0083] FIG. **32**D show a plurality of screens that may be displayed on an vendor device illustrating methods for collecting payments from each of the group transaction members and completing the group transaction of FIG. **31**;

DETAILED DESCRIPTION OF SPECIFIC EMBODIMENTS

[0084] One or more specific embodiments of the present disclosure will be described below. These described embodiments are only exemplary of the presently disclosed techniques. Additionally, in an effort to provide a concise description of these exemplary embodiments, all features of an actual implementation may not be described in the specification. It should be appreciated that in the development of any such actual implementation, as in any engineering or design project, numerous implementation-specific decisions must be made to achieve the developers' specific goals, such as compliance with system-related and business-related constraints, which may vary from one implementation to another. Moreover, it should be appreciated that such a development effort might be complex and time consuming, but would nevertheless be a routine undertaking of design, fabrication, and manufacture for those of ordinary skill having the benefit of this disclosure.

[0085] The present disclosure is directed to various techniques for conducting peer-to-peer financial exchanges using a handheld, portable electronic device. The handheld electronic device, in accordance with aspects of the present disclosure, may integrate several functionalities for performing peer-to-peer transactions, including the storing information representation a user's payment accounts and crediting accounts, acquiring and sending payment information, and obtaining payment authorization. One or more input devices, such as a camera or near field communication (NFC) device may be provided for the acquisition of payment information. For example, the NFC device may be used to initiate an NFC connection with an external device for acquiring or sending payment information data. Additionally, the camera device may be utilized in cooperation with an image processing application to extract payment information data from an image of a payment instrument provided by a payor. The electronic device may also be configured to communicate with one or more external servers to acquire an authorization for a payment through a selected communication channel, such as a wide area network (WAN), local area network (LAN), personal area network (PAN), or near field communication channel. Thus, the various functions provided by an electronic device in accordance with embodiments of the present disclosure, as will be described in further detail below, may provide a convenient technique for performing peer-to-peer financial exchanges, include group exchanges involving more than two members. Indeed, as will be discussed in further detail below, certain aspects of the below-described techniques may be particular useful in person-to-person transactions conduct between individuals.

[0086] Turning now to the drawings and referring initially to FIG. **1**, an electronic device that may include one or more transaction applications for providing the transaction related techniques and capabilities briefly mentioned above is illustrated and generally referred to by reference numeral **10**. In accordance with the illustrated embodiment, the electronic device **10** may be a handheld device incorporating the functionality of one or more portable devices, such as a media player, a cellular phone, a personal data organizer, and so forth. Thus, depending on the functionalities provided by the electronic device **10**, a user may listen to music, play games, record video, take pictures, and place telephone calls, while moving freely with the device **10**. In addition, the electronic device **10** may allow a user to connect to and communicate through the Internet or through other networks, such as local or wide area networks. For example, the electronic device **10** may allow a user to communicate using e-mail, text messaging, instant messaging, or other forms of electronic communication. The electronic device **10** also may communicate with other devices using short-range connection protocols, such as Bluetooth and near field communication (NFC). By way of example only, the electronic device **10** may be a model of an iPhone®, available from Apple Inc. of Cupertino, Calif.

[0087] As shown in the illustrated embodiment, the device **10** may be enclosed by an enclosure or housing **12**. The enclosure **12** may serve to protect the internal components of the device **10** from physical damage. In addition, the enclosure **12** may also provide the device **10** and its internal components shielding from electromagnetic interference. As will be appreciated by those skilled in the art, the enclosure **12**

may be formed and/or constructed from any suitable material such as plastic, metal, or a composite material and may allow certain frequencies of electromagnetic radiation to pass through to wireless communication circuitry within the device **10** for facilitation of wireless communications.

[0088] The enclosure **12** may further provide for access to various user input structures, depicted in FIG. **1** by reference numerals **14**, **16**, **18**, **20**, and **22**. By way of these user input structures, a user may interface with the device **10**, wherein each user input structure **14**, **16**, **18**, **20**, and **22** may be configured to control one or more device functions when pressed or actuated. By way of example, the input structure **14** may include a button that when pressed or actuated causes a home screen or menu to be displayed on the device. The input structure **16** may include a button for toggling the device **10** between one or more modes of operation, such as a sleep mode, a wake mode, or a powered on/off mode, for example. The input structure **18** may include a dual-position sliding structure that may mute or silence a ringer in embodiments where the device **10** includes a cell phone application. Further, the input structures **20** and **22** may include buttons for increasing and decreasing the volume output of the device **10**. It should be understood that the illustrated input structures **14**, **16**, **18**, **20**, and **22** are merely exemplary, and that the electronic device **10** may include any number of user input structures existing in various forms including buttons, switches, control pads, keys, knobs, scroll wheels, and so forth, depending on specific implementation requirements.

[0089] The electronic device **10** may further include a display **24** configured to display various images generated by the device **10**. By way of example, the display **24** may be configured to display photos, movies, album art, and/or data, such as text documents, spreadsheets, text messages, and e-mail, among other things. The display **24** may also display various system indicators **26** that provide feedback to a user, such as power status, signal strength, call status, external device connections, or the like. The display **24** may be any type of display such as a liquid crystal display (LCD), a light emitting diode (LED) display, an organic light emitting diode (OLED) display, or other suitable display. In certain embodiments, the device **10** may include a touch sensitive element, such as a touch screen interface (not shown in FIG. **1**) disposed adjacent to the display **24** that may function as an additional user input structure (e.g., in addition to structures **14**, **16**, **18**, **20**, and **22**). By way of this touch screen interface, a user may select elements displayed on the display **24** such as, for example, by touching certain elements using the user's finger or a stylus.

[0090] As further shown in the present embodiment, the display **24** may be configured to display a graphical user interface ("GUI") **28** that allows a user to interact with the device **10**. The GUI **28** may include various graphical layers, windows, screens, templates, elements, or other components that may be displayed on all or a portion of the display **24**. For instance, the GUI **28** may display a plurality of graphical elements, depicted here generally as icons **30**. By default, such as when the device **10** is first powered on, the GUI **28** may be configured to display the illustrated icons **30** as a "home screen," represented herein by the reference numeral **29**. In certain embodiments, the user input structures **14**, **16**, **18**, **20**, and **22**, may be used to navigate through the GUI **28** and, accordingly, away from the home screen **29**. For example, one or more of the user input structures may include a wheel structure that may allow a user to select various icons **30** displayed by the GUI **28**. Additionally, the icons **30** may also be selected via the touch screen interface.

[0091] As will be appreciated, the icons **30** may represent various layers, windows, screens, templates, elements, or other components that may be displayed in some or all of the areas of the display **24** upon selection by the user. Furthermore, the selection of an icon **30** may lead to or initiate a hierarchical screen navigation process. For instance, the selection of an icon **30** may cause the display **24** to display another screen that includes one or more additional icons **30** or other GUI elements. Also, as shown in the present embodiment, each graphical element **30** may have one or more textual indicators **32** associated therewith, which may be displayed on or near its respective graphical element **30** to facilitate user interpretation of each graphical element **30**. For example, the icon **34** may be associated with the textual indicator "Transactions." It should be appreciated that the GUI **28** may include various components arranged in hierarchical and/or non-hierarchical structures.

[0092] When an icon **30** is selected, the device **10** may be configured to initiate, open, or run an application associated with the selected icon **30** and to display a corresponding screen. For example, when the transaction icon **34** is selected, the device **10** may open a transaction program and display a transactions menu displaying the various tools, features available in the transaction program. Thus, for each application provided on the device **10**, one or more respective screen or screens may be displayed on the display **24** that may include various user interface elements corresponding to a respective application.

[0093] The electronic device **10** may also include various input/output (I/O) ports, such as the illustrated I/O ports **36**, **38**, and **40**. These I/O ports may allow a user to connect the device **10** to or interface the device **10** with one or more external devices. For example, the input/output port **36** may include a proprietary connection port for transmitting and receiving data files, such as media files. The input/output port **38** may include a connection slot for receiving a subscriber identify module (SIM) card, for instance, where the device **10** includes cell phone functionality. The input/output port **40** may be an audio jack that provides for connection of audio headphones or speakers. As will appreciated, the device **10** may include any number of input/output ports configured to connect to a variety of external devices, such as to a power source, a printer, and a computer, or an external storage device, just to name a few. As will appreciated, the I/O ports may include any suitable interface type such as a universal serial bus (USB) port, serial connection port, FireWire port (IEEE-1394), or AC/DC power connection port.

[0094] Further, in some embodiments, certain I/O ports may be configured to provide for more than one function. For instance, in one embodiment, the I/O port **36** may be configured to not only transmit and receive data files, as described above, but may be further configured to couple the device to a power charging interface, such as an power adaptor designed to provide power from a electrical wall outlet, or an interface cable configured to draw power from another electrical device, such as a desktop computer. Thus, the I/O port **36** may be configured to function dually as both a data transfer port and an AC/DC power connection port depending, for example, on the external component being coupled to the device **10** through the I/O port **36**.

[0095] The electronic device **10** may also include various audio input and output elements. For example, the audio

input/output elements, depicted generally by reference numeral **42**, may include an input receiver, which may be provided one or more microphones. For instance, where the electronic device **10** includes cell phone functionality, the input receivers may be configured to receive user audio input such as a user's voice. Additionally, the audio input/output elements **42** may include one or more output transmitters. Thus, where the device **10** includes a media player application, the output transmitters of the audio input/output elements **42** may include one or more speakers for transmitting audio signals to a user, such as playing back music files, for example.

[0096] Further, where the electronic device **10** includes a cell phone application, an additional audio output transmitter **44** may be provided, as shown in FIG. **1**. Like the output transmitter of the audio input/output elements **42**, the output transmitter **44** may also include one or more speakers configured to transmit audio signals to a user, such as voice data received during a telephone call. Thus, the input receivers and the output transmitters of the audio input/output elements **42** and the output transmitter **44** may operate in conjunction to function as the audio receiving and transmitting elements of a telephone.

[0097] In the illustrated embodiment, the electronic device **10** further includes a near field communication (NFC) device **46**. The NFC device **46** may be located within the enclosure **12**, and a mark or symbol on the exterior of the enclosure **12** may identify its location within the enclosure **12**. The NFC device **46** may include an antenna that may generally be positioned along the circumference of the housing **12**, and may allow for close range communication at relatively low data rates (e.g., 424 kb/s), and may comply with standards such as ISO 18092 or ISO 21481. In some embodiments, the NFC device **46** may also allow for close range communication at relatively high data rates (e.g., 560 Mbps), and may comply with the TransferJet® protocol. As used herein, it should be understood that the term "NFC device" refers to both an NFC communication device **46**, as well as the above-mentioned antenna.

[0098] In certain embodiments, the communication using the NFC device **46** may occur within a range of approximately 2 to 4 cm. As will be appreciated by those skilled in the art, close range communication using the NFC device **46** may take place via magnetic field induction, thus allowing the NFC device **46** to communicate with other NFC-enabled devices or to retrieve information from tags having radio frequency identification (RFID) circuitry. Additionally, magnetic field induction may also allow the NFC device **46** to "wake" or induce another NFC-enabled device that is in a passive or sleep mode into an active mode. As will discussed in further detail below, the NFC device **46** may be utilized in conjunction with the transaction application described above (e.g., represented by graphical element **34**) to provide for the acquisition and transmission of payment and crediting information, as well as communication with one or more external servers for processing and authorization of a transaction as well as the verification of payment and crediting accounts.

[0099] Continuing now to FIG. **2**, a rear view of the electronic device **10** depicted in FIG. **1** is illustrated. As shown in FIG. **2**, the device **10** may include a camera **48**. The camera **48** may be used to acquire digital still or moving images, such as digital photographs or movies. As will be discussed in further detail below, the camera **48** may be utilized in conjunction with the aforementioned transaction application, depicted by the graphical element **34**, in order to acquire images of various types of payment instruments, such as checks or credit cards. As will be known by those skilled in the art, various image processing techniques, such as optical character recognition (OCR), may be applied to the processing of the acquired photographic images of payment instruments in order to extract information corresponding to account holder identify and account information associated with a particular payment instrument.

[0100] Additional details of the illustrative device **10** may be better understood through reference to FIG. **3**, which is a block diagram illustrating various components and features of the device **10** in accordance with one embodiment of the present disclosure. As shown in FIG. **3**, the device **10** may include the above discussed display **24**, the NFC device **46**, and the camera **48**, as well as a CPU **50**, control circuitry **52**, a storage device **54**, a plurality of communication interfaces **56**, a video controller **76**, a touch screen interface **78**, an I/O controller **80**, and a power source **80**.

[0101] The operation of the device **10** may be generally controlled by the central processing unit (CPU) **50** and the control circuit **52**. In cooperation, these elements may provide the processing capability required to execute an operating system, application programs, the GUI **28**, and any other functions provided on the device **10**. The CPU **50** may include a single processor or, in other embodiments, it may include a plurality of processors. By way of example, the CPU **50** may include "general purpose" microprocessors, a combination of general and application-specific microprocessors, instruction set processors, graphics processors, video processors, as well as related chips sets and/or special purpose microprocessors. The control circuit **52** may include one or more data buses for transferring data and instructions between components of the device **10**. The control circuit **52** also may further include on board memory (RAM) for caching purposes. Additionally, although not illustrated in FIG. **3**, the device **10** may include a standalone random access memory (RAM) in communication with the CPU **50** by way of one or more memory controllers, which may be integrated within the control circuit **52**.

[0102] Information used by the CPU **50** may be stored within a long-term storage device, represented by reference numeral **54**. The storage device **54** of the electronic device **10** may be utilized for storing data required for the operation of the CPU **50**, data to be processed or executed by the CPU **50**, as well as other data required by the device **10**, such as application and program data. By way of example, the storage device **54** may be configured to store the firmware for the electronic device **10** that is used by the CPU **50**. The firmware may include an operating system, as well as other programs or drivers that enable various functions of the electronic device **10**, GUI functions, and/or processor functions. The storage device **54** may also store components for the GUI **28**, such as graphical elements, screens, and templates. Additionally, the storage device **54** may store data files such as media (e.g., music and video files), image data, application software, preference information (e.g., media playback preferences, general user preferences), wireless connection information (e.g., information that may enable the device **10** to establish a wireless connection, such as a telephone or Internet connection), subscription information (e.g., information that maintains a record of podcasts, television shows or other media to which a user subscribes), telephone information (e.g., telephone numbers), and any other suitable data required by the device **10**.

[0103] The long term storage **54** may be non-volatile memory such as read only memory, flash or solid state memory, a hard disk drive, or any other suitable optical, magnetic, or solid-state computer readable media, as well as a combination thereof. Thus, although the long term storage **54** is depicted as a single device for purposes of clarity, it should understood that the long term storage **54** may include one or more of a combination of the above-listed storage devices operating in conjunction with the CPU **50**.

[0104] Further, in certain embodiments, the storage device **54** may include an image processing application configured to perform extraction of textual or encoded information from image data, such as an image acquired using the camera device **48**. The image processing application may employ one or more OCR techniques, as briefly described above. For example, the image processing application may be used to extract credit card information from an acquired image of the credit card, or banking information from an acquired image of a check. These features and applications will be described in further detail below.

[0105] The device **10** may further include one or more communication interfaces, illustrated in FIG. **3** by reference numeral **56**, for providing additional connectivity channels for receiving and transmitting information. For example, communication interface **56** may represent one or more network interface cards (NIC) and/or a network controller as well as various associated communication protocols. The communication interface **56** may include several types of communication interfaces, including but not limited to, a wireless local area network (WLAN) interface **58**, an NFC interface **60**, an unstructured supplementary service data (USSD) interface **62**, a personal area network (PAN) interface **64**, a local area network (LAN) interface **66**, a wide area network (WAN) interface **68**, and a short message service (SMS) interface **70**.

[0106] The PAN interface **64** may provide capabilities to network with, for example, a Bluetooth® network, an IEEE 802.15.4 (e.g., ZigBee) network, or an ultra wideband network (UWB). As will be appreciated, the networks accessible by the PAN interface **64** may, but do not necessarily, represent low power, low bandwidth, or close range wireless connections. The PAN interface **64** may permit one electronic device **10** to connect to another local electronic device, such as a computer or portable media player, via an ad-hoc or peer-to-peer connection. However, the connection may be disrupted if the physical distance between the two electronic devices exceeds the effective range of the PAN interface **64**.

[0107] The LAN interface **66** and WLAN interface **58** may provide longer-range communication channels, generally exceeding the range available via the PAN interface **64**. The LAN interface **66** may represent, for example, an interface to a wired Ethernet-based network providing a connection to an Intranet or the Internet, and the WLAN interface **58** may represent an interface for connecting to a wireless LAN, such as an IEEE 802.11x wireless network. Additionally, in many cases, a connection between two electronic devices via the LAN interface **66** may involve communication through one or more network routers, switches, gateways, or some other intermediary device.

[0108] Connection to a wide area network (WAN) may be provided by way of the WAN interface **68**. The WAN interface **68** may permit a private and/or secure connection to a cellular data network, such as the Enhanced Data rates for GSM Evolution (EDGE) network or the 3G network (e.g., based on the IMT-2000 standard). When connected via the WAN interface **68**, the electronic device **10** may remain connected to the Internet and, in some embodiments, to one or more additional electronic devices, despite changes in location that might otherwise disrupt a connection through the PAN interface **64**, LAN interface **66**, or the WLAN interface **58**.

[0109] In certain embodiments, the electronic device **10** may also include a service discovery networking protocol to establish a connection with an external device through a network interface. For example, both the device **10** and the external device may broadcast identification information using internet protocol standards (IP). In some embodiments, the external device may additionally broadcast information relating to the available services the external device is capable of providing (e.g., printing services for a networked printer). The devices may then use the identification information to establish a network connection, such as a PAN connection or a WLAN connection, between the devices. By way of example, a device identification protocol may be provided by Bonjour®, developed by Apple Inc.

[0110] Small size communications may be sent using the USSD interface **62** and the SMS interface **70**. The SMS interface **70** may allow transmission of text messages of 140 bytes or less. In certain embodiments, larger size messages may be sent using concatenated SMS. The USSD interface **62** may facilitate the transmission of real time text messages over GSM signaling channels. By way of example, the USSD interface **62** may be used to query for locations and addresses, movie showing times, stock quotes, or the like.

[0111] The device **10** may be further provided with close range communication capabilities by way of the NFC interface **60**. The NFC interface **60** may operate in conjunction with the above-described NFC device **46** to provide for close range communications between the device **10** and an external device. The NFC interface **60** may exist as a separate component, may be integrated into another chipset, or may be integrated into the NFC device **46** itself, for example, as part of a system-on-chip (SoC) circuit. The NFC interface **60** may include one or more protocols, such as the Near Field Communication Interface and Protocols (NFCIP-1), for communicating with another NFC-enabled device. The protocols may be used to adapt the communication speed and to designate one of the connected devices as an initiating device that controls and/or initiates the NFC connection. In certain embodiments, the NFC interface **60** may be used to receive information, such as a service set identifier (SSID), channel, and/or encryption key that may be required to permit a connection through another communication interface, such as the WLAN interface **58**, the PAN interface **64**, the LAN interface **66**, or the WAN interface **68**.

[0112] In certain embodiments, the NFC interface **60** may enable the electronic device **10** to communicate in a peer-to-peer mode for exchanging data, such as payment and crediting information, with another NFC-enabled device in the context of carrying out or initiating the processing of a financial transaction, as will be discussed in further detail below. The NFC interface **60** also may be configured to switch the NFC device **46** between a "host" or active mode in which the NFC device **46** generates its own RF field, as well as a passive mode or "wake-on-NFC" mode in which the NFC device **46** may be induced into an active state for performing the transfer or receiving of data upon detection of an RF field generated by another device. As will be appreciated, operation of the NFC device **46** and interface **60** in the passive mode may

prolong the battery life of the device **10**. In additional embodiments, the NFC device **46** may be controlled based on user or manufacturer preferences, represented herein by reference number **72**, which may be pre-configured by a manufacturer or vendor, or subsequently configured by a user based on the user's preferences. These preferences, whether pre-configured or later configured, may be stored in the storage device **54**.

[0113] In embodiments where the electronic device **10** is configured to provide for the initiation of peer-to-peer transactions, including financial transactions, between an external device, as will be discussed in further detail below, the preferences **72** may include a user-specified preferred or default payment account or source, as well as user-specified preferred or default crediting account. As used herein, the term "payment account" or the like shall be understood to refer to an account from which a payment is to be debited or charged. Additionally, the term "crediting account" or the like shall be understood to refer to an account from which a payment is to be deposited or credited. Thus, a default payment account may be an account that is automatically selected for providing a payment when a transaction is initiated on the device **10**. Similarly, a default crediting account may be an account that is automatically selected for the crediting or deposit of a received payment. The preferences **72** may also include a preferred e-mail address at which a user prefers to receive electronic receipt records or confirmation messages with regard to payments made or received via operating the electronic device **10**.

[0114] In certain embodiments, the preferences **72** may further determine properties of the above-mentioned communication interfaces **56** (e.g., including **58**, **60**, **62**, **64**, **66**, **68**, and **70**). For instance, the preferences **72** may include a list of networks that the device **10** may connect to and may further govern the order or priority between the communication interfaces **56**. By way of example, the device **10** may be configured to communicate through the NFC interface **60** if the communication is with regard to receiving payment information from or sending payment information to an external device. Similarly, the device **10** may be configured to communicate through the WLAN **58** or LAN **66** interfaces if the communication is with regard to verifying received payment information with an external and/or remote financial server, for example. Still further, the device **10** may be configured to initiate or take part in a group transaction, in which communication with a plurality of external devices is achieved through a combination of the provided communication interfaces **56**. For instance, in one embodiment, the device **10** may receive payment information from one or more of a plurality of external devices through the NFC interface **60**, while simultaneously communicating an updated invoice or bill to each of the external devices through an ad-hoc network established through one of the WLAN **58**, PAN **64**, or LAN **66** interfaces.

[0115] As will be further appreciated, the communication preferences associated with the preferences **72** may be further dependent upon security features **74** available for each respective communication interface **58**, **60**, **62**, **64**, **66**, **68**, and **70**. The security features **74** may be stored in the storage device **54** and may include one or more cryptographic protocols, such as a secure sockets layer (SSL) protocol or a transport layer security (TLS) protocol, for establishing secure communications between the device **10** and an external device. The security features **74** may also include one or more encryption applications for encrypting information sent from the device **10**. These features may be particularly useful when transmitting information of a sensitive nature, such as payment and/or crediting account information, which may generally include credit card and bank account information, for example.

[0116] The security features **74** may also include a secure access-restricted storage area (e.g., within the storage device **54**) to limit access to the data that may be required by the certain aspects of the security features **74**, such as encryption keys, passcodes and passwords, digital certificates, or the like. Additionally, the secure storage area may be adapted to store sensitive data, such as information pertaining to a user's financial accounts, including credit card accounts and banking accounts. The secure storage area may also store information regarding accounts of a non-financial nature. As used herein, the term "non-cash account," "non-financial account," or the like shall be understood to refer to accounts which may contain non-monetary assets that may nevertheless be used as a medium of exchange with at least one party, such as the institution holding or maintaining the non-cash account. To provide one example, a non-financial or non-cash account may be a user's online music/media subscription or purchase account, such as an iTunes® account available through the iTunes® online digital media store, developed and operated by Apple Inc. An iTunes® account may include a number of "credits" by which a user may redeem or exchange at the iTunes® online media store for media files, such as music files, movie files, audiobooks, podcasts, or the like. Thus, these non-cash accounts may be stored alongside financial accounts (e.g., banking and credit card accounts) within the secure storage area provided by the security features **74**. In certain embodiments, the secure storage area may include a microcontroller embedded within the electronic device **10**. Additionally, in some embodiments, the secure storage area, in addition to storing the above-mentioned sensitive data, may be further protected by its own respective password or authorization "personal identification number" (PIN), for example, in order to prevent unauthorized access to the information stored therein.

[0117] In accordance with further embodiments, the security features **74** may further allow a user to lock or temporarily disable all (e.g., lock on power-up) or only certain functions on the device **10**, such as the functionalities which may be provided by transaction application (e.g., represented by the icon **34**) described above. By way of example, when locked, the peer-to-peer transaction features briefly discussed above may be disabled or inaccessible by users until a user-specified PIN or password is provided. Further, the security features **74** may additionally include requiring that the PIN be provided prior to the sending or transmissions of payment account information to external devices. As can be appreciated, the security features **74** described herein may aid to prevent the device **10** from being used to make payments by unauthorized persons.

[0118] As discussed above, the device **10** may also include the video controller **76**, which may be operatively coupled to the display **24** and configured to receive image data and to send voltage signals corresponding to the pixel values of the image data to the display **24**. The displayed image data may be representative of information received through the communication interface **56**, as well as information contained in the storage device **54**. As will be understood by those skilled in the art, pixel values may be numerical assignments corre-

sponding to respective pixel intensities. Thus, the display **24** may receive the voltage signals from the video controller **76** as an input and produce an image corresponding to the voltage signals. For instance, an image produced by the signals provided by the video controller **76** may represent a screen of the GUI **28** described above with reference to FIG. **1**.

[0119] As further noted above, a user operating the device **10** may select various graphical elements which may represent applications or information that may be displayed through the GUI **28**. As shown in FIG. **3**, a touch screen interface **78** may be positioned in front of or behind the display **24** and may provide a user the ability to select graphical elements, such as the icons **30** displayed by the GUI **28** described above in FIG. **1**. The touch screen interface **78** may be configured to receive inputs based on a physical contact (e.g., touching the display **24**) either by the user or an object (e.g., stylus) being controlled or manipulated by the user, and to send "touch event" information to the CPU **50**. The CPU **50** may then process the detected touch event information and perform a corresponding action. For instance, referring briefly back to FIG. **1**, the "touching" of the icon **34** may be processed by the CPU **50** as an instruction to execute or initiate the corresponding transaction application. The touch screen interface **78** may employ any suitable type of touch screen technology such as resistive, capacitive, infrared, surface acoustic wave, electromagnetic, or near field imaging. Furthermore, the touch screen interface **78** may employ single point or multipoint sensing.

[0120] The I/O controller **80** depicted in FIG. **3** may provide an infrastructure for allowing a user to communicate with the CPU **50** through various input structures provided on the device **10**, such as the input structures represented by the reference numerals **14**, **16**, **18**, **20**, and **22** in FIG. **1**. The user input structures **14**, **16**, **18**, **20**, and **22** may be used in conjunction with, or independently of, the touch screen interface **76** to provide input information to the device **10**.

[0121] The power source **82** of the device **10** may include the capability to power the device **10** in both non-portable and portable settings. For example, in a portable setting, in order to facilitate transport and ease of motion, the device **10** may include an integrated power source **82** for powering the device **10**. The power source **82** may include one or more batteries, such as a Li-Ion battery, which may be user-removable or secured to the enclosure **12**. In certain embodiments, the proprietary connection I/O port **36** may be used to connect the device **10** to a power source for recharging the battery. In other embodiments, the one or more batteries may be non-integrated and may include one or more rechargeable or replaceable batteries. Further, in a non-portable setting, the power source **82** may include AC power, such as provided by an electrical outlet.

[0122] As described above, the device **10** may include a transaction application (e.g., represented by icon **34**) providing the device **10** the ability to initiate and receive transactions (e.g., payments and credits) from an external device. Referring now to FIG. **4**, a system, generally designated by reference numeral **90**, for conducting a peer-to-peer transaction between a first device **10** being operated by a "payee" and a second device **92** operated by a "payor" is illustrated. The second device **92** may be a portable device that is substantially identical to the first device **10** or, in other embodiments, may be a non-portable device, such as a desktop computer or a payment terminal, for example. As used herein, the term "payee" shall be understood to refer to one party in a transaction that is receiving a payment, and the term "payor" shall be understood to refer to another party in the transaction that is making the payment." Accordingly, the terms "payee device" and "payor device" shall be understood to refer to devices (e.g., the devices **10** and **92**) being operated by a payee and a payor, respectively.

[0123] As shown in FIG. **4**, the device **10** acts as the payee device of the transaction, and the second device **92** acts as the payor device. Initially, the payee device **10** may transmit a payment request, illustrated herein by reference numeral **94**, to the payor device **92**. The payment request information **94** may include information relating to the amount of a payment being requested by the payee device **10**. The payment request information **94** may also include information indicating the identity of the payee, which may include text data corresponding to the name of the payee, an e-mail address belonging to and/or identifying the payee, or any other type of suitable identification information. Additionally, the payment request **94** may further include information indicating the purpose of the payment request. For example, the payment request **94** may be in response to a specific outstanding debt or balance owed to the payee by the payor.

[0124] In one embodiment, the payee device **10** and the payor device **92** may both be NFC-enabled devices each having a respective NFC device **46** and NFC interface **60**, as described above. Initially, both the payee **10** and payor **92** devices may be in a passive mode of operation. Just prior to transmitting the payment request **94** to the payor device **92**, the NFC device **46** of the payee device **10** may be powered on, thus transitioning the payee device **10** to an active mode in which an RF field is generated by the NFC device **46** of the payee device **10**. Thus, when the payee device **10** and the payor device **92** are placed within a close enough proximity or distance to facilitate the establishment of an NFC connection (e.g., typically 2-4 cm), the RF field generated by the payee device **10** may induce the NFC device **46** of the payor device **92** to transition to an active mode of operation, thus establishing an NFC connection between the two devices, as discussed above. Accordingly, by way of this established NFC connection, the payment request information **94** may be transmitted to and received by the payor device **92**.

[0125] Upon receiving the payment request information **94** from the payee device **10**, the payor device **92** may display the received payment request information **94** on a display, such as the display **24** described above. Thus, the payor may review the payment request information **94** for accuracy and select a payment method to be used in providing the requested payment to the payor. The payment method may be, for example, a credit card account or a bank account belonging to payee. As discussed above, account information pertaining to the selected payment account may be stored on the payor device **92**, such as in a secure storage area with the storage device **54** described above in FIG. **3**. Thus, information pertaining to the selected payment method (e.g., credit card or bank account) may be stored in and retrieved from the secured storage area for transmission to the payee device **10** upon selection of a particular account by the payor.

[0126] Accordingly, once the desired payment account is selected, the payment account information, represented here by reference numeral **96**, may be transmitted to the payee device **10**. For example, like the transmission of the payment request information **94**, the payment account information **96** may similarly be transmitted from the payor device **92** to the payee device **10** by way of the previously established NFC

connection through each device's respective NFC interface **60**, or by initiating a new separate NFC connection session if the previous NFC connection has already terminated (e.g., the distance between the devices exceeds the 2-4 cm range). In certain embodiments, the payee device **92** may also include security features **74** discussed above and may permit the transmission of the payment information **96** only if a password, PIN, or some other suitable form of authentication is first provided. Before continuing, it should be noted that the NFC-based exchange of payment information between the payee device **10** and the payor device **92** is provided merely by way example. Indeed, in other embodiments, any type of suitable communication interface, such as those described above with reference to the communication interface components **56** in FIG. **3**, may be utilized.

[0127] Upon receiving the payment information **96** from the payor device **92**, the payee may view the payment information **96** on the display **24** of the payee device **10**. Thereafter, the payee may select a desired crediting account, which may be stored on the payee device **10**, to which the payment represented by the payment account information **96** is to be,credited or deposited. Once the crediting account is selected on the payee device **10**, the requested payment amount, the payment account information **96**, and the selected crediting account, collectively referred to as the "transaction information" and represented by reference numeral **98**, may be transmitted by the payee device **10** to one or more financial servers **100** for verification of the account information and the subsequent authorization and processing of the requested payment. As will be appreciated, communication with the financial servers **100** may be accomplished through one or more of the communication interfaces described above. For instance, if the payee device **10** is a portable device having WLAN or WAN capabilities, the payee device **10** may communicate with the financial servers **100** via a wireless connection. If the device **10** is a non-portable device, then a LAN connection may be provided for communication with the financial servers **100**. Regardless of the type of connection established between the device **10** and the financial servers **100**, it should be understood that one or more of the data encryption techniques and security protocols (e.g., SSL or TSL protocols) discussed above with regard to the security features **74** of FIG. **3** may be further utilized in order to facilitate the secure transmission of the transaction data **98** to the financial servers **100**.

[0128] As can be appreciated by those skilled in the art, the type or types of financial servers **100** to which in the transaction data **98** is transmitted may depend on the type of payment account selected by the payor and/or the type of crediting account selected by the payee. For instance, if the payment account selected by the payor is a credit card account and if the crediting account specified on the payee device **10** is a bank account, then the financial servers **100** may include both a bank server as well as a credit card verification server. By way of example, the transaction information **98** may first be transmitted to a bank server associated with a banking institution at which the specified crediting account is held for verification of whether the specified crediting account is a valid account and capable of receiving a credit card payment. As will be understood, the receipt of credit card payments to a bank account may constitute a special service that may require enrollment, subscription, or additional payment of fees by the payee. Thus, if the crediting account is not authorized to receive payments made using a credit card account, then the payee may be notified to select a different crediting account.

[0129] If it is determined that the selected crediting account is authorized to receive payments from a credit card account, then the transaction data **98** may be further transmitted to a credit card verification server in the form of an authorization request. The credit card verification server may be associated with a credit card company which maintains the payor's selected credit card account, such as American Express® or MasterCard®. The credit card verification server may process the transaction information **98** to determine whether a charge to the payor's credit card account in the amount specified in the payment request may be authorized. By way of example, the credit card verification server may first verify whether the credit card account information provided in the transaction information **98** corresponds to a valid credit card account belonging to the specified payor. The credit card verification server may further determine whether the line of credit associated with the credit card account is sufficient to satisfy the requested payment amount. If the credit card verification server determines that the specified credit card account is valid and is authorized to make the requested payment, then the credit card verification server may authorize a payment to the crediting account selected by the payee by charging the payor's credit card. The credit card verification server may then transmit an authorization message to the bank server indicating that the requested payment has been authorized and that the requested payment has been charged to the payor's credit card account and credited or deposited to the payee's crediting account (e.g., bank account).

[0130] The above-discussed interactions between the credit card verification server and the bank server are intended to illustrate just one possible scenario with regard to processing a transaction initiated by the payee device **10** or the payor device **92**. Thus, it should be understood that various other types of scenarios may exist in which one or more types of financial servers are utilized for the processing of a peer-to-peer transaction in accordance with embodiments of the present disclosure. For instance, instead of a credit card verification server, a transaction may be processed by multiple bank servers in a scenario in which the specified crediting account and payment account are both bank accounts held at different respective banking institutions. It should be further understood that the communication between the various financial servers **100** described above may be provided by any suitable communication interface available on the payee device **10** and payor device **92**, such as a WAN **68**, LAN **66**, or WLAN interface **58** to name just a few, and may include one or more security protocols, such as SSL or TSL, as well as one or more data encryption techniques for protecting the security and integrity of the transaction information **98**.

[0131] As further illustrated in FIG. **4**, once the transaction is processed, a completion message **102** may transmitted to the payee device **10**. The completion message **102** may be received by the WAN, WLAN, LAN interfaces, as described above or, or in some embodiments may be transmitted through e-mail or by way of an SMS text message (e.g., via the SMS interface **70**). The completion message **102** may indicate whether or not the requested transaction has been successfully processed. If the transaction is successful, then the completion message **102** may include a confirmation indicating to the payee that the requested payment **94** has been credited to the specified crediting account. Alternatively, if

the transaction is unsuccessful for one or more reasons (e.g., the provided credit card account lacks sufficient funds or credit), then the completion message **102** may indicate that the transaction was unsuccessful and/or advise the payee to pursue an alternate method of payment.

[0132] In one embodiment, the payee device **10** may have multiple crediting accounts stored thereon, and payee may specify, such as via the user preferences **72**, an order of priority with regard to the crediting accounts. For instance, the selected crediting account may automatically be selected as the crediting account having the highest priority ranking. Thus, if the reason that the transaction is unsuccessful is due to the currently selected crediting account (e.g., the account may not be configured to receive credit card payments), the transaction application may be configured to automatically initiate a subsequent transaction request to the financial servers **100** using the crediting account having the next highest priority setting. Additionally, the financial servers **100** or the payee device **10** may also transmit a confirmation message in the form of an electronic receipt, represented herein by reference numeral **104**, to the payor device **92** if the transaction is processed successfully. The electronic receipt **104** may serve as acknowledgment that the requested payment has been satisfied by the payor and received by the payee.

[0133] While the one or more financial servers **100** in the examples provided above refer to multiple servers (e.g., bank servers and credit card verification servers), in certain scenarios, the one or more financial servers **100** may include a single financial server, such as in situations where the specified payment account and crediting account are held by the same financial institution (e.g., the same bank). In this scenario, the transaction authorization process described above may be performed by a single server associated with the common financial institution. Thus, it should be understood that the phrase "single server" may refer to more than one computing device in different locations, but that each of the computing devices are owned, operated, or otherwise associated with the same financial institution. Additionally, the one or more financial servers **100** need not necessarily be limited to financial servers configured to manage monetary assets. For instance, where a transaction involves non-cash assets, such as credits stored in an iTunes® account, as discussed above, the financial servers **100** may include a server managed by the iTunes® online server. Indeed, these additional embodiments with regard to the interactions of various financial servers **100** are also envisioned within the scope of the present disclosure and will be described in further detail below.

[0134] Continuing with the present disclosure, FIGS. **5**A-**10**B illustrate, by way of a plurality of screen images, various methods and techniques for configuring the electronic device **10** for use with the above-described transaction application **34**. The depicted screen images may be generated by the GUI **28** and displayed on the display **24**. For instance, these screen images may be generated as the user interacts with the device **10**, such as via the input structures **14**, **16**, **18**, **20**, and **22**, and/or the touch screen interface **78**. Specifically, these figures illustrate techniques and methods for storing payment account and crediting account information into the device **10**, as well as for configuring one or more of the user preferences **72** and security features **74** described above with regard to FIG. **3**, in accordance with embodiments of the present disclosure.

[0135] As discussed above, the GUI **28**, depending on the inputs and selections made by a user, may display various screens including icons (e.g., 30) and graphical elements. These elements may represent graphical and virtual elements or "buttons" which may be selected by the user by physically touching their respective location on the display **24** using the touch screen interface **76**, for example. Accordingly, it should be understood that the term "button," "virtual button," "graphical button," "graphical elements," or the like, as used in the following description of screen images below, is meant to refer to the graphical representations of buttons or icons represented by the graphical elements provided on the display **24**. Further, it should also be understood that the functionalities set forth and described in the subsequent figures may be achieved using a wide variety graphical elements and visual schemes. Therefore, the present disclosure is not intended to be limited to the precise user interface conventions depicted herein. Rather, embodiments of the present disclosure may include a wide variety of user interface styles.

[0136] Referring first to FIGS. **5**A and **5**B, these figures collectively illustrate screen images that may be displayed on the device **10** when information representing a credit card account is entered and stored into the device **10** by a user. The stored credit card information may then be used as a payment account in conjunction with the transaction application described above. As shown in FIG. **5**A, a user may initiate the transaction application by selecting the icon **34** displayed on the home screen **29** of the device **10**. Upon selection of the icon **34**, the transaction application may be initiated, such as via the CPU **50**, and the user may be advanced to the screen **110**, which may represent a "home" or "main" screen for the transaction application.

[0137] The screen **110** may include a plurality of graphical elements, represented by the reference numerals **112**, **114**, and **116**. Each of the graphical elements **112**, **114**, and **116** may be displayed in the form of a button or key, and may include a brief description of a corresponding function or action associated therewith. For instance, the graphical button **112** may represent a function by which a user may view and modify account information stored on the device **10**. The graphical button **114** may represent a function by which the user may initiate a peer-to-peer transaction, such as the transaction described above in FIG. **4**. Further, the graphical button **116** may represent a function by which the user may view and modify a variety of user preferences, such as the user preferences **72** described above with reference to FIG. **3**. The functionalities provided by the graphical button **116** may also allow the user to modify or access one or more of the security features **74** discussed above.

[0138] The present discussion will initially begin with a description of the functionalities provided by the graphical button **112**. However, it should be kept in mind that the additional functionalities provided by the graphical buttons **114** and **116** will be discussed in further detail below. Additionally, as shown in FIG. **5**A, the screen **110** may include the graphical button **118**. The graphical button **118** may represent an action returning a user to a previous screen. For instance, if the user were to select the button **118** displayed on the screen **110** in FIG. **5**A, the user would be returned to the home screen **29**.

[0139] In order to enter and store a new credit card account into the device **10**, the user may select the graphical button **112** to access the screen **120**, which may display a listing of all accounts presently stored on the device **10**. As illustrated by

the screen **120**, the presently stored accounts may be organized and displayed in accordance with certain categories. For instance, the account information screen **120** may display a first listing **122** of presently stored credit card accounts, a second listing **124** of presently stored banking accounts, a third listing **126** of presently stored non-cash accounts, as well as additional listings **128** of other accounts, which may include charge cards or loyalty cards associated with a specific vendor or retailer. Additionally, the account information screen **120** may include additional graphical elements representing the functions of adding additional accounts to or removing existing accounts from the device **10**, as represented by the graphical buttons **130** and **132**, respectively. Thus, to add a new account to the device **10**, the user may select the graphical button **130**. Further, if the user desires to remove a previously stored account displayed on one or more of the listings **122**, **124**, **126**, or **128**, the user may do so by selecting the graphical button **132**.

[0140] As shown in FIG. **5**A, upon selecting the graphical button **130**, the user may be advanced to the screen **134**. The screen **134** may include a plurality of graphical buttons **136**, **138**, **140**, **142**, and **144**, each of which may represent categories of various types of accounts which may be stored onto the device **10**. By way of example, the user may initiate the process of entering and storing a new credit card account by selecting the graphical button **136**. This selection may advance the user to the screen **146**. It should be understood, however, that if the user may chooses to select any of the other graphical buttons **138**, **140**, **142**, or **144**, for the entering of different account types, and that the selection of any of these other graphical buttons will advance the user to a respective appropriate screen.

[0141] Referring now to the screen **146**, several drop-down style selection fields, illustrated by reference numerals **148**, **150**, **152**, and **154** may be displayed. For instance, the drop-down selection field **148** may provide a listing of credit card brands corresponding to various credit card providers, upon which the user may make an appropriate selection based upon the particular credit card which the user desires to store in the device **10**. Additionally, the drop-down fields **150** and **152** may provide the user with a selection of the month and year, respectively, corresponding to the expiration date associated with the new credit card account. As will be appreciated, the drop-down fields, when actuated or selected by a user, the drop-down fields may display a list of available options that may be selected to populate the respective drop-down field. For instance, referring to the drop-down field **154**, which may represent the selection of a category corresponding to the type of credit card account being entered, the user may select a category from a listing of available categories generally describing various credit card account types. By way of example, the credit card may be generally used with regard to gas purchases, airline or travel purchases, or may be a general use card for a variety of purchases.

[0142] In accordance with one aspect of the present disclosure, one or more business methods may be provided in which agreements with one or more credit card providers may be reached in which the manufacturer of the device **10** may pre-configure the device **10** such that a particular credit card brand may be initially selected as a default selection. For instance, as shown in FIG. **5**A, the drop-down field **148** may initially display the default credit card brand associated with a particular credit card provider (e.g., American Express®). Thus, if a user continues through the process depicted in FIGS. **5**A and **5**B and completes the steps of adding a credit card type of the default selection to the device **10**, the manufacturer of the device **10** and the credit card provider may enter into an agreement in which the manufacturer of the device **10** receives a commission or fee each time a credit card account maintained by that credit card provider is stored onto a device sold and/or manufactured by the manufacturer. Additionally, the manufacturer of the device **10** may also reach an agreement with the credit card provider such that the manufacturer of the device **10** may receive a percentage of the credit card transaction fee paid to the credit card provider if the credit card transaction is performed using the device **10**.

[0143] Continuing now with the description of FIG. **5**A, the screen **146** may also further include several text fields, as depicted herein by the reference numerals **156** and **158**. The field **156** may allow the user to enter the account number corresponding to the new credit card account. Additionally, the form field **158** may be provided to allow the user to enter a card verification value (CVV) code corresponding to the selected credit card. As will be appreciated, CVV codes are generally printed on the front or back of a credit card, and may also be encoded on the magnetic stripe on the credit card, and may serve as an additional security feature in credit card transactions, thus providing increased protection against credit card fraud. In an alternate embodiment, the CVV code may not be required when entering a new account and, instead, may be required by the device **10** each time the newly added credit card account is used in a transaction.

[0144] In order to input data into the fields **156** and **158**, the screen **146** may include a graphical text input keyboard interface **160**. The text input keyboard interface **160** may include a plurality of graphical buttons representing letters of the alphabet, for example, as well as buttons representing the standard "spacebar" and "backspace" functions on a keyboard. Accordingly, the user may use the text keyboard interface **160** to input text data into any text fields that may be displayed on the display **24** of the device **10**. The text input keyboard **160** may also include a graphical button **162** that may allow the user to toggle between the text input keyboard **160** and a numerical keyboard **164**. As shown in FIG. **5**A, the numerical keyboard **164** may include a plurality of buttons representing the numbers 0-9, as well as several commonly used punctuation marks. The numerical keyboard **164** may also include the graphical button **166** by which the user may select to return to the text keyboard **160**. By way of example, the user may switch from the text keyboard **160** to the numerical keyboard **164** in order to input the credit card account number and the CVV code into the form fields **156** and **158**. Additionally, if the need arises to return to the text keyboard **160**, the user may do so by selecting the graphical button **166** on the numerical keyboard **164**. In additional embodiments, the numerical and text input features may be integrated into a single graphical keyboard interface.

[0145] Once all the credit card information required by the drop-down fields **148**, **150**, **152**, and **154**, and the text fields **156** and **158** has been provided by the user, the user may select the graphical button **168** to begin a credit card verification process. This verification process may generally serve the purpose of verifying that the user performing the steps of entering the credit card account into the device **10** is either the credit card account holder or an authorized user. For instance, during the verification process, the credit card information entered in the screen **146** may be transmitted to the corresponding credit card provider. As discussed above, the trans-

mission of the credit card information may be accomplished through one or more of the above-described communication interfaces and be protected by one or more of the above-described encryption and security methods.

[0146] Referring now to FIG. **5**B, once the credit card provider has verified that the credit card information provided by the device **10** is valid, the credit card provider may confirm the identify of the user by transmitting one or more verification codes to the device **10**. For instance, referring to the screen **170**, a notification message **172** may be displayed informing the user that a verification code for activating the credit card to be used on the device **10** has been provided, such as by e-mail, for example. As will be appreciated, the e-mail address to which the verification code is sent may be the e-mail address associated with the credit card account and contained in records maintained by the credit card provider. Thus, this ensures that only the authorized user or users will receive the verification code. Accordingly, the credit card verification screen **170** may include a graphical button **144**, which may execute an e-mail program through which the user may retrieve e-mail messages to obtain the verification code.

[0147] Additionally, by selecting the graphical button **178**, the user may return to the screen **120**, which may be updated to include the new credit card account **180** entered by the user via the screen **146**, as discussed above. The screen **120**, at this point in the process, may indicate that the newly entered credit card account **180** may not be used to make payments from the device **10** until an authorization or activation action, such as providing the above-described verification code, is performed. Once the user has obtained the e-mailed verification code discussed above with reference to the screen **170**, the user may proceed to the screen **184** to enter the verification code, and thus activate the credit card account **180** for use on the device **10**. For example, as illustrated in FIG. **5**B, the user may select the location of the new credit card account **180** on the screen **120** to proceed to the screen **184**.

[0148] As illustrated in the screen **184**, the user may be provided with a text field **186** for entering the e-mail verification code described above. The verification code may be entered using the text input keyboard **160** and/or the numerical keyboard **164**, which may be accessed by selecting the graphical button **162**. Once the e-mail verification code is entered, the user may select the graphical button **188**, thereby completing the verification process and returning the user to the screen **120**. If the verification code provided by the user in the text field **186** matches the verification code provided by the credit card provider, as discussed above, newly entered credit card account **180** will be authorized and ready for use in conjunction with the transaction application **34**, as shown in the final updated screen **120** of FIG. **5**B.

[0149] In the event that the e-mail verification code is not received for some reason, the user may alternatively provide a phone verification code in the text field **190** to activate the credit card account **180**. For instance, referring back to the screen **170**, a telephone confirmation code **176** is also provided in the notification message **172**. In one embodiment, in order to obtain the phone verification code, the user must provide the telephone confirmation code **176** to the credit card provider, such by way of a telephone call, in order to receive a corresponding telephone verification code which may differ from the e-mail verification code, but will permit the use of the newly entered credit card **180** by the transaction application **34** if correctly entered. Thus, the user may enter the telephone verification code into the text field **190** and select the graphical button **192** as an alternate method for authorizing the newly entered credit card account **180** for use with the transaction application **34**.

[0150] Continuing now to FIGS. **6**A and **6**B, these figures depict, by way of screen images, a method for entering and storing a bank account onto the electronic device **10**. As will be appreciated, several aspects of the process illustrated by FIGS. **6**A and **6**B may be similar, if not identical, to the steps discussed above with reference to FIGS. **5**A and **5**B. Beginning with FIG. **6**A, a user may select the graphical button **112** on the screen **110** to access the screen **120** which as discussed above, may display a listing of all accounts presently stored on the device. As illustrated in FIG. **6**A, the credit card account **180** that was entered by the user in FIGS. **5**A and **5**B is included in the listing **122** of stored credit card accounts.

[0151] Next, the user may select the graphical button **130** on the screen **120** to advance to the screen **134**. As discussed above, the screen **134** may display the graphical buttons **136**, **138**, **140**, **142**, and **144**, each of which may represent categories of various types of accounts which may be stored onto the device **10**. Accordingly, to enter and store a new bank account, the user may select the graphical button **140** to proceed to the screen **198**. As shown in FIG. **6**A, the screen **198** may be similar to the screen **146** discussed above in that a plurality of drop-down fields (e.g., **200**, **202**) and text fields (e.g., **204**, **206**) may be provided. By way of these fields, the user may enter the required bank account information onto the device **10**. For instance, the drop-down fields **200** may allow the user to select the identity of the banking provider associated with the new bank account. The drop-down field **202** may also provide for the selection of the type of banking account being stored which may be, for example, a checking account, a savings account, a money market account, and so forth. Further, the text fields **204** and **206** may allow the user to enter a routing number for the banking provider and the account number associated with the bank account, respectively. The text keyboard **160** may be provided on the screen **198** for entry of data into the fields **204** and **206**. Additionally, as discussed above, a numerical keyboard **164** may be accessed via selection of the graphical button **162** when the input of numerical data, such as the above-mentioned routing and bank account numbers, is required.

[0152] Once the required bank account information is entered into the drop-down fields **200** and **202** and the text fields **204** and **206**, the user may select the graphical button **208** to initiate the process of verifying and authorizing the entered bank account for use with the transaction application **34** on the device **10**. As can be appreciated, certain aspects of the verification process with respect to the entered bank account may be similar to the credit card verification process described above with respect to FIG. **5**B. For instance, during the verification process, the bank account information entered in the screen **198** may be transmitted to banking provider selected in the drop-down field **200**. As discussed above, the transmission of the bank account information may be accomplished through one or more of the above-described communication interfaces (e.g., the interfaces **58**, **60**, **62**, **64**, **66**, **68**, and **70**) and be protected by one or more of the above-described encryption and security methods.

[0153] Continuing now to FIG. **6**B, once the banking provider has verified that the bank account information transmitted by the device **10** represents a valid bank account, the banking provider may confirm the identify of the user using any suitable type of authentication technique. For example, in

the illustrated embodiment, the banking provider may initiate one or more verification deposits into the bank account. As will be appreciated by those skilled in the art, verification deposits are usually relatively small amounts (e.g., less then $1.00 USD) and may be used to confirm the identity of the account holder. For instance, the banking provider may require that the account holder provide the exact values of the verification deposit amounts before the newly entered bank account may be authorized for use with the transaction application **34**. By way of example, referring now to the screen **210** in FIG. **6**B, once the banking provider has verified the validity of the bank account entered in the screen **198**, the notification message **212** may be displayed. In the illustrated embodiment, the notification message **212** may inform the user that two verification deposits have been credited to the newly entered bank account, although it should be understood that any number of verification deposits may be used in the confirmation process.

[0154] The user may select the graphical button **214** to return to the screen **120**, in which the listing **124** may be updated to include the newly entered bank account, as indicated by the reference numeral **216**. Like the screen **120** depicted in FIG. **5**B, the screen **120** of FIG. **6**B may indicate that the new bank account **216** may not be used to make payments using the device **10** until the above-discussed verification deposit amounts have been confirmed with the banking provider. Accordingly, the user may be required to determine the amounts of the verification deposits, such as by viewing a banking statement issued subsequent to deposit of the verification amounts, for example.

[0155] After determining the verification deposit amounts, the user may access the screen **218** by selecting the location of the new bank account **216** on the screen **120**. As shown in FIG. **6**B, the screen **218** may display the text fields **220** and **222**, by which the user may enter the amounts of the two verification deposits. Additionally, the screen **218** may include the numerical keyboard **164** by which the user may input the verification deposit amounts into the fields **220** and **222**. Once the verification deposit amounts have been entered, the user may complete the confirmation process by selecting the graphical button **224** and returning to the screen **120**. As shown in FIG. **6**B, if the deposit amounts entered by the user in the screen **218** match the verification amounts deposited by the banking provider, then the newly entered bank account **216** will be authorized and ready for use in conjunction with the transaction application **34**, as shown in the final updated screen **120** of FIG. **6**B. As will be discussed in further detail below, a bank account stored on the device **10** (or the device **92**) may be used as both a crediting account and a payment account depending on whether the device **10** is assuming the role of the payee device or the payor device.

[0156] Continuing now to FIGS. **7**-**10**B, the device **10**, as discussed above, may include one or more preference settings, such as those represented by reference numeral **72** in FIG. **3**, which may either be pre-configured by the manufacturer or later configured by the user. By way of example, the preference settings **72** may include the selection of a default payment account, a default crediting account, as well as additional settings, such as the selection and storing of an authorization PIN number for security purposes. Thus, the screen images illustrated in FIGS. **7**-**10**B are intended to illustrate, by way of example, techniques by which the user may operate the device **10** to configure the aforementioned preference settings.

[0157] Referring first to FIG. **7**, the selection of a default payment account may initially begin from the screen **110**. There, the user may select the graphical button **116** to access the screen **230**, which may display the present configuration of one or more user preferences on the device **10**. In the illustrated embodiment, the user preference settings displayed on the screen **230** may include a presently selected default payment account **232** and a presently selected default crediting account **234**. The screen **230** may also include the graphical buttons **236** and **238**, which may be displayed next to the default accounts **232** and **234**, respectively, and may allow the user to modify or change the default account settings if selected.

[0158] As will be discussed in further detail, the screen of **230** may additionally display various other preference settings, such as user-entered e-mail address **240** which may identify the user of the device **10** and which may also be used by the transaction application **34** for receiving payment receipts, for example. As shown in FIG. **7**, the user may update the e-mail address setting **240** via selecting the graphical button **242**. The screen **230** may further include the graphical button **244**, by which the user may select to input and store an authorization PIN code, as well as indicate a permission status with regard to the transaction application **34**. For instance, as indicated by reference numeral **246**, the transaction application **34** may be in an "unlocked" mode, and may thus be used by the user to perform the transactions generally described above. For security purposes, the user may toggle this permission setting **246** between an unlocked and a locked mode, such as via selecting the graphical button **248**, whereby the transaction application **34** may be disabled when in the locked mode. As will be appreciated, when the transaction application **34** is locked, the user may be unable to send or receive payments using the device **10**. In certain embodiments, the transaction application **34** may only be unlocked upon providing an authorization PIN, as will be explained in further detail below.

[0159] Referring back to the default payment account **232** setting, the user may update this preference setting by selecting the graphical button **236**, which may advance the user to the screen **258**. The screen **258** may display a listing of all accounts presently stored on the device that may be selected as a payment account. In the illustrated embodiment, the listing of accounts may be organized into the categories designated by reference numerals **260**, **262**, and **264**. As can be appreciated, this may be similar to the listing of the accounts described on the screen **120** with reference to **5**A. The listing **260** may correspond to a listing of credit card accounts presently stored on the device **10**. As shown in the listing **260**, the credit card account **232** that was displayed on the previous screen **230** may be indicated as being the presently selected default payment account. Here, the user may have the option of selecting one of the other listed accounts as the default payment account. Additionally, the user may select the graphical button **266** if the user does not wish to configure a default payment account setting. For example, by selecting the graphical button **266**, the transaction application **34** may prompt the user to select a payment account each time a payment is being made using the device **10**.

[0160] In the present embodiment, the user may select the credit card account **180** that was entered in FIGS. **5**A and **5**B. For instance, the user may select the credit card account **180** by selecting its general location on the screen **258**. Thereafter, the previously selected default payment account (e.g., credit

card account **232**) may be deselected, and the credit card account **180** may be indicated on the screen **258** as the presently selected default payment account. Next, the user may select the graphical button **118** to return to the screen **230**, which may be updated to display the credit card account **180** as the newly selected default payment account.

[0161] Continuing now to FIG. **8**, this figure shows additional screen images in which the user may select a default crediting account. As illustrated, the user may select the graphical button **238** on the screen **230** to access the screen **270**. The screen **270** may display a listing of all accounts presently stored on the device that may be selected as a crediting account. For instance, the screen **270** may display the listing **262** of bank accounts and the listing **264** of non-cash accounts. However, the screen **270** may omit the listing **260** of credit card accounts discussed above with reference to the screen **258** of FIG. **7**, since credit card accounts are not generally used as a medium to accept payment credits or deposits.

[0162] As shown in the listing **262**, the bank account **234** that was displayed on the previous screen **230** may be indicated as being the presently selected default crediting account. Accordingly, the user may have the option of selecting one of the other listed accounts on the screen **230** as a default crediting account. By way of example, the user may select the bank account **216** that was entered in FIGS. **6**A and **6**B. For instance, the user may select the bank account **216** by selecting its general location on the screen **270**. Thereafter, the previously selected default crediting account **234** may be deselected, and the bank account **216** may be indicated on the screen **270** as being the presently selected default crediting account. Next, the user may select the graphical button **118** to return to the screen **230**, which may be updated to display the bank account **216** as the newly selected default payment account. Additionally, as discussed above, the user may select the graphical button **266** if the user does not wish to configure a default crediting account setting and, instead, prefers to be prompted to select a crediting account each time a payment is received via the device **10**.

[0163] Once the default payment account (e.g., credit card account **180**) and the default crediting account (e.g., bank account **216**) have been configured by the user in the manner described above with reference to FIGS. **7** and **8**, the user may continue to configure additional preference settings from the screen **230**. For example, referring now to FIG. **9**, a plurality of screen images depicting a method for selecting an authorization PIN is illustrated. Beginning with the screen **230**, the user may select the graphical button **244** to access the screen **280**. The screen **280** may include an instructional message **282** generally instructing the user to select a desired authorization PIN having a certain number of characters. For instance, in the illustrated embodiment, the device **10** may be configured to store a four digit PIN. However, it should be appreciated that other implementations may utilize authorization PINs of any desired length.

[0164] As illustrated in the screen **280**, the user may enter the desired PIN **286** into a text field **284** by way of the numerical keyboard **164**. Additionally, in embodiments where the device **10** may support PIN codes having both text and numerical characters, the user may access the text keyboard **160** (not shown in FIG. **9**) by selecting the graphical button **166**, as discussed above. Once the desired PIN **286** has been entered, the user may confirm the entered PIN **286** by selecting the graphical button **288**, which may update the screen **280** to display a confirmation message **290** instructing the user to re-enter the selected PIN **286** into the confirmation text field **292**. Thus, the user may re-enter the selected PIN **286** into the text field **292** by way of the numerical keyboard **164**.

[0165] Once the PIN **286** has been entered into the text field **292**, the user may complete the authorization PIN selection process by selecting the graphical button **294**. As will be understood by those skilled in the art, upon the selection of the graphical button **294**, the device **10** may determine whether the authorization PIN codes entered into the text fields **284** and **292** are identical. If the PINs entered into the text fields **284** and **292** do not match, either due to an erroneous user input or for any other reason, then the user may be notified of the mismatch (not shown in FIG. **9**) and may be required to re-enter the PIN **286** into each of the text fields **284** and **292** once again. If the entered PINs are determined to be identical, then the PIN **286** may be stored on the device **10** for use as an authorization PIN code to provide additional security features with regard to various aspects of the transaction application **34**, as will be discussed in further detail below. Thereafter, once the authorization PIN **286** is confirmed and stored into the device **10**, the user may be returned to an updated screen **230** in which the graphical button **244** is replaced with the graphical button **298** corresponding to a function by which the user may edit or modify the presently stored authorization PIN code **286**.

[0166] In addition to providing the user with the function of selecting and storing the authorization PIN code **286**, the user preference settings for the device **10** may additionally provide a function that locks or disables the transaction application **34**, thus preventing the device from receiving, sending, or processing transaction requests while the transaction application **34** is locked. For example, once locked by the user, the transaction application **34**, in one embodiment, may remain in the locked or disabled state until the authorization PIN **286** that was stored by the user in FIG. **9**, is entered. These techniques with regard to the locking and subsequent unlocking of the transaction application may be better understood with reference to FIGS. **10**A and **10**B.

[0167] Referring first to FIG. **10**A, the screen **230**, as discussed above, may display an indication of the current status of the permission setting **246** for the transaction application **34**, which may presently indicate the transaction application **34** is in an unlocked state. In order to lock the transaction application **34**, the user may select the graphical button **248** to access the screen **304**. As shown in the screen **304**, a notification message **306** may be displayed generally informing the user that the device **10** will be unable to receive or send transaction requests if the transaction application **34** is locked. If the user chooses to lock the transaction application **34**, the user may do so by selecting the graphical button **308** on the screen **304**. As shown in FIG. **10**A, the selection of the graphical button **308** will lock the transaction application **34** and return the user to the screen **230**, which may be updated to indicate that the permission setting **246** is presently in a locked state. It should be noted that the graphical button **248** may be replaced on the updated screen **230** with the graphical button **312** which, when subsequently selected, may represent a function allowing the user to unlock the transaction application **34**. Additionally, if at the screen **304**, the user decides not to lock the transaction application **34**, the user may select the graphical button **310**, thus returning to the

previous screen **230** where the permission setting **246** for the transaction application is indicated as being unlocked.

[0168] Continuing now to FIG. **10**B, if the user chooses to lock the transaction application **34** in FIG. **10**A, the user may select the graphical button **312** on the screen **230**. Upon the selection of the graphical button **312**, the user may be advanced to the screen **318**, which may display the notification message **320**, the field **322**, and the graphical button **324**. The notification message **320** may instruct the user to enter the authorization PIN **268** selected in FIG. **9**. As shown here, the numerical keyboard **164** may be provided for entry of the authorization PIN **268** into the text field **322**. Once the authorization PIN **268** has been entered, the user may confirm the unlock request by selecting the graphical button **324**, which may return the user to the screen **230**, wherein the permission setting **246** is updated to reflect that the transaction application **34** is once again in an unlocked state, thus re-enabling the functions of receiving and sending transaction requests using the device **10**. Additionally, it should be noted that the graphical button **312** may be replaced with the graphical button **248**, described above.

[0169] Having described the configuration of various aspects relating to the transaction application **34** that may be executed on the device **10**, FIGS. **11**A illustrates a method for initiating and subsequently processing a transaction from the viewpoint of a payee, generally designated by the reference numeral **328**. Similarly, FIG. **11**B illustrates a method **360** describing the receipt of a transaction request and the subsequent action of making a payment in response to the transaction request from the viewpoint of a payor. It should be understood that the methods **328** and **360**, in some situations, may occur at least partially concurrently.

[0170] Beginning with FIG. **11**A, the method **328** may begin with the determination of an invoice at step **332**. As will be understood, the term "invoice" may refer to the general terms of a payment request, which may include the amount of the requested payment, the identity of the requesting payee, as well as additional information describing the nature or reasons as to why the payment is being requested. Once the terms of the invoice are determined at step **332**, the invoice information may be transmitted to the payor, as indicated by step **334**. By way of example, the transmission of the invoice information described in the method **328** may be correspond to the communication of the payment request information **94** from the payee device **10** to the payor device **92**, as discussed above with reference to FIG. **4**.

[0171] Thereafter, the payee may await the transmission of information representing a payment account from the payor, as indicated by step **336**. As discussed above, the receipt payment information from the payor may indicate an acknowledgement and acceptance of the requested payment from step **334**. Upon receiving the payment information from the payor, the payee, at step **338**, may select a crediting account on the device **10** to which the payee wishes the requested payment to be credited or deposited. For instance, as discussed above, the crediting account may be automatically selected as user-specified default crediting account **216**, as described above with reference to FIGS. **6**A and **6**B, and/or may be manually selected by the user.

[0172] Next, the payment request information determined at step **332**, the payment information received from the payor at step **336**, and the selected crediting account from step **338**, which may altogether be referred as the "transaction information," may be transmitted to one or more appropriate financial servers **100** for the validation and processing of the requested transaction. For instance, as noted above, the types of financial servers **100** to which the transaction information may be transmitted may depend on the types of payment and crediting accounts selected by the payor and the payee, respectively.

[0173] The transaction information may be processed at decision step **340** to determine whether the requested transaction may be authorized. If it is determined at step **340** that the financial servers **100** are unable to authorize one or more of the payment account or the crediting account for carrying out the requested transaction, then the method **328** may proceed to the decision step **342**, whereby the payee may be prompted to renegotiate the terms of the present transaction. By way of example, if the payee wishes to renegotiate the terms of the transaction, the payee may either return to step **336** to receive an alternate payment account from the payor, or may return to step **338** to select an alternate crediting account. As will be appreciated, the decision as to whether to return to step **336** or **338** may depend on the reason or reasons as to why the transaction information could not be verified or authorized at the decision step **340**. For instance, if the authorization process failed due to insufficient funds or credit with regard to the payment account received at step **336**, then the payee may request that the payor provide an alternate payment account having the sufficient funds, credit, or otherwise, to satisfy the requested payment amount. In this scenario, the method **328** may proceed from the decision step **342** back to the step **336**.

[0174] Alternatively, the situation may arise in which the authorization failure at decision step **340** is due to an incompatibility between the payment account and the crediting account. By way of example, this type of transaction failure may occur where the selected payment account is a credit card account and the selected crediting account is a bank account that is not authorized or configured to receive payments made from a credit card account. Thus, the method may either return to step **338** from decision step **342** in which the payee may be prompted to select an alternate crediting account that is authorized to accept payments from the selected payment account, or return to step **336** whereby the payee may request that the payor select an alternate payment account, such as a bank account, that is compatible with the payee's selected crediting account. Alternatively, the payee may choose to not to renegotiate the terms of the transaction at step **342**, and thus cancel the present transaction at step **344**.

[0175] Returning now to decision step **340**, if it is determined that the requested transaction may be authorized with respect to the payment and crediting accounts, then, at step **346**, a payment corresponding to the requested payment amount may be credited or deposited to the crediting account selected at step **338**, as indicated by reference numeral. Once the payment has been received by the payee at step **346**, the transaction may be completed at step **348**. Thereafter, at step **350**, a payment receipt may be transmitted to the payor by the payee, either directly via the payor device **10**, or indirectly via one of the financial servers **100** under the payee's authorization. For example, the payee may authorize that an electronic receipt, such as the receipt **104** of FIG. **4**, is transmitted from one or more financial servers **100** to the payor's device **92** upon successful completion of the transaction.

[0176] Continuing now to FIG. **11**B, the transaction generally described in FIG. **11**A from the payee's point of view is now described form the payor's point of view by way of the

method **360**. Beginning with step **364**, the payor may receive a payment request from the payee. For example, the receipt of the payment request at step **364** may correspond to the transmission of the invoice information at step **334** of the method **328**. Upon receipt of the payment request, the method **360** may proceed to step **366**, wherein the payor may select a payment account from one or more of the available payment accounts stored on the payor device **92**. As with the description of the selection of a default payment account **180** on the device **10** in FIGS. **5**A and **5**B, the payor device may incorporate similar features. Once the payment account is selected, the method may continue to step **366** in which the selected payment account is transmitted to the payee. As discussed above, in one embodiment, the transmission of the payment request and payment account information may be accomplished by way of an NFC connection between a payee device **10** and a payor device **92**. Once the payee receives the information representing the payor's selected payment account, the payee may select a crediting account (e.g., step **338** of the method **328**) and provide the transaction information to the one or more financial servers **100** for processing.

[0177] At decision step **368**, a determination is made as to whether the transaction is successfully completed. If the transaction did not complete, such as for one or more of the above-discussed reasons, the payor's account will not be charged, as indicated at step **370**. Alternatively, if it is determined at decision step **368** that the transaction is authorized by the financial servers and successfully completed, then the crediting account specified by the payor will be debited or charged for the requested payment amount at step **372**. Thereafter, the payor may receive a receipt as shown by step **374**, indicating that a payment has been made from the crediting account to the payee. For example, the receipt received at step **374** of the method **360** may correspond to the receipt transmitted at step **350** of the method **328**, described above.

[0178] Continuing now with the present discussion, FIGS. **12**A-**12**C illustrate schematic diagrams representing various transactions that may be performed between a payee device **10** and payor device **92** in accordance with the presently described techniques. In general, the embodiments illustrated by FIGS. **12**A-C, depict several scenarios in which a transaction may be initiated between two NFC-enabled devices by way of an NFC tap operation, as will be explained in further detail below. For instance, FIG. **12**A illustrates an in which a payment is made by way of a credit card account stored on the payor device **92** in response to a payment request provided by a payee device **10**. FIGS. **12**B and **12**C illustrate additional embodiments in which a bank account is selected by the payor as the payment account. Specifically, FIG. **12**B illustrates a scenario in which the selected payment and crediting accounts are maintained by different banking providers, and FIG. **12**C illustrates a scenario in which the selected payment and crediting accounts are maintained by the same banking provider.

[0179] Beginning with FIG. **12**A, the transaction **375** may include the payee device **10**, the payor device **92**, as well as the one or more financial servers **100** which, in the present embodiment, may include a bank server **380** and a credit card verification server **382**. To initiate the transaction **375**, the payee device **10** may first transmit a payment request **384** to the payor device **92**. As discussed above, the payment request **384** may include the amount of the requested payment, the identity of the payee, as well as additional information with regard to the nature or reason for the payment request. As noted above, the payee device **10** and they payor device **92** may both be NFC-enabled devices. Accordingly, the payment request information **384** may be transmitted from the payee device **10** to the payor device **92** through the establishment of an NFC connection **388** by way of "tapping" the devices, or performing a "tap operation," as depicted by reference numeral **386**.

[0180] As used herein, the term "tap" and "tap operation," or the like shall be understood to mean the action of placing one NFC-enabled device within the proximity of one or more additional NFC-enabled devices such that an NFC-based connection may be established between the devices. As discussed above, one technique for establishing an NFC-based connection may be through magnetic field induction, whereby a first NFC-enabled device acting as a host device generates an RF field, which in turn induces an NFC device located within a second device to transition from a passive state to an active state, thus establishing an NFC connection. Once established, information may be exchanged between the devices by way of the NFC connection.

[0181] Referring briefly to FIG. **13**, a schematic diagram of the NFC tap operation **386** is illustrated. For instance, prior to the initiation of the NFC connection **388**, the payor device **92** may be in a passive or a "wake on NFC" mode, as denoted by reference numeral **390**. While in the passive state, an NFC device **46** and an NFC interface **60** that may be included in the device **92** may remain inactive until the NFC interface **60** detects an NFC transmission from an external device, such as the payee device **10**. By way of example, once the payee device **10** is operated to transmit the payment request **384**, the NFC interface **60** and corresponding NFC device **46** located within the payee device **10** may transition to an active or host mode, as denoted by reference numeral **392**. While in the host mode **392**, the NFC device **46** of the payee device **10** may periodically emit NFC communication signals to seek out other NFC-enabled devices having their own respective NFC interfaces **60** and NFC devices **46** that are within the appropriate range to facilitate an NFC connection.

[0182] For instance, when the payee device **10** and the payor device **92** are placed within an appropriate range (e.g., the tap operation **386**) for establishing an NFC connection, the establishment of the connection may begin with an initiation handshake, referred to herein by reference numeral **396**. It should be understood, that in tapping the devices, it is important that the NFC devices **46** within each respective device are positioned in such a way that the distance between the respective NFC devices **46** is suitable for establishing an NFC-based connection. For example, if the payor device **92** is a relatively large non-portable device, the payee would be required to position the payee device **10** such that the NFC device **46** within the payee device **10** is within the appropriate distance of any corresponding NFC circuitry within the payor device **92** in order to establish the NFC connection **388**.

[0183] While the NFC interface **60** and the NFC device **46** of the payee device **10** are operating in the host mode, the payee device **10** may periodically emit ping messages **400**. The corresponding NFC interface **60** of the payor device **92** may receive the ping messages **400**, thus causing the NFC device **46** located within the payor device **92** to awake upon the detection of the NFC transmission (e.g., wake on NFC), thereby transitioning from a passive mode to an active mode, as indicated by reference numeral **398**. Thus, once powered on and active, the NFC device **46** of the payor device **92** may reply in response to the ping message **400** by sending an

acknowledgement message **402** which may be received via the NFC interface **60** of the payee device **10**, thus completing the initiation handshake **396**.

[0184] Following this initiation handshake **396**, the payee device **10** and the payor device **92** may exchange device profiles as indicated by the reference numeral **404**. The device profiles **404** may include a variety of information regarding the functions available on the payee device **10** and the payor device **92**. For example, the device profiles **404** may be represented by data messages of any suitable form, including extensible markup language (XML), which may denote the device name, serial number, owner name, device type, as well as any other type of identifying information. For example, additional identifying information may include, for example, the name of a service provider, such as a network or cellular telephone service provider that may be associated with each of the devices **10** and **92**. The device profiles **404** may additionally include information with regard to the capabilities of the payee device **10** or the payor device **92** by indicating which applications, drivers, or services may be installed on each device.

[0185] Additionally, the payee device **10** and the payor device **92** may also exchange information with regard to the encryption capabilities available on each device, as represented by reference numeral **406**. As discussed above, because the various transactions discussed herein may invariably involve the transfer of sensitive information, such as information relating to credit card accounts and bank accounts, the use of one or more encryption measures for protecting the transaction information being transferred between a payee device **10** and a payor device **92**, as well as to the one or more financial servers **100**, may be implemented. Accordingly, once the NFC connection **388** is established and the device profiles **404** and encryption capabilities **406** are exchanged, information may be exchanged between the devices **10** and **92**, as indicated by reference numeral **408**.

[0186] Returning now to FIG. **12**A, the data transfer **408** may include the transfer of the payment request information **384** from the payee device **10** to the payor device **92** by way of the established NFC connection **388**. Next, upon receiving the payment request information **384**, the payor respond may continue the transaction process by selecting a payment account stored on the payor device **92**. In the illustrated embodiment, the selected payment account may be a credit card account. The payor device **92** may transmit the credit card information **410** corresponding to the selected credit card account to the payee device **10** via the NFC connection **388** by way of a second tap operation **412**. As can be appreciated, he tap operation **412** may be carried out in a manner identical to the tap operation **386** described above with reference to FIG. **13**, except that the payor device **92** may act as the host device, while the payee device may operate in a "wake on NFC" mode. It should also be noted, that in some embodiments, the exchange of the payment request information **384** and the payment account information **410** may occur via a single tap operation (e.g., **386**) if distance between the devices **10** and **92** is maintained, thus keeping the NFC connection **388** active for the duration of the data transfer.

[0187] After receiving the credit card information **410** on the payee device **10**, the payee may select a crediting account to which the requested payment is to be credited, as discussed above with reference to the method **328** (e.g., step **338**). Once the crediting account is selected, the payor's credit card account information **410**, the payee's crediting account information, and the payment request information **384**, collectively represented by the transaction information **414**, may be transmitted to the financial server **380** by way of a network connection depicted herein by reference numeral **416**. By way of example, if the selected crediting account is a bank account, the financial server **380** may correspond to a banking provider that maintains the crediting account. Additionally, the network **416** by which the transaction information **414** is transmitted may be include any suitable network that may be provided by one communication interfaces **56** (e.g., WAN, LAN, WLAN, etc.) available on the payee device **10**. For instance, the network **416** may be a wireless internet connection established by way of the WLAN interface **58**, a local area network connection established through the LAN interface **66**, or a wide area network connection established by way of the WAN interface **68**, which may include one of various WAN mobile communication protocols, such as a General Packet Radio Service (GPRS) connection, an EDGE connection (Enhanced Data rates for GSM Evolution connection), or a 3G connection, such as in accordance with the IMT-2000 standard discussed above.

[0188] Upon receipt the transaction information **414**, the financial server **380** may perform several actions to further the authorization of the requested transaction **375**. For example, the financial server **380** may first assess the accounts provided by the transaction information **414** to determine whether the specified payment account and crediting account are compatible. As discussed above, the financial server **380** may be unable to process the requested transaction **375** if the specified crediting account is not authorized to accept payments from a credit card account. Next, if the crediting account and the payment account are determined by the financial server **380** to be compatible, the financial server **380** may further transmit the payor's credit card account information, represented by reference numeral **418**, to the credit card verification server **382** by way of a network **420**. The network **420** may be any type of suitable network for facilitating the transmission of data, including one or more of the network types described above with regard to the network **416** by which the transaction information **414** is initially transmitted to the financial server **380**.

[0189] Once the payor's credit card account information **418** is received by the credit card verification server **382**, additional verification and authorization steps, represented by reference numeral **422**, may be performed in order to verify that the provided credit card account is valid and has the sufficient line of credit to fulfill the requested payment. Thus, if the credit card verification server **382** determines that the provided credit card information **418** corresponds to a valid credit card account having the sufficient credit to carry out the requested payment **384**, the credit card verification server **382** may authorize the requested payment by sending an authorization message to the financial server **380** by way of the network **420**. The financial server **380** may then complete the processing of the requested transaction **375**, as illustrated by reference numeral **424**, in which an amount corresponding to the requested payment is charged to the payor's credit card account, and where the charged is deposited to the payee's selected crediting account.

[0190] Thereafter, once the transaction has been successfully processed and completed at step **424**, a transaction confirmation message **426** may be transmitted to the payee device **10** by way of the network **416**. The transaction confirmation message **426** may generally indicate to the payee that the

requested payment **384** has been completed. Additionally, a payment receipt **428** may also be transmitted to the payor device **92**. The payment receipt **428** may be transmitted to the payor device **92** by any of the connection types described above. For example, the transmission of the payment receipt **428** may occur via a network **430**, which may be any type of network connection established by way of a common networking interface available on the payee device **10** and the payor device **92**, such as a LAN connection (e.g., interface **66**), a WLAN connection (e.g., interface **58**), or a WAN connection (e.g., interface **68**). Additionally, the payment receipt **428** may also be transmitted by tapping the payee device **10** to the payor device **92**. This tap operation, illustrated by reference numeral **432**, may establish a further NFC connection **434**, thus providing a channel by which the payment receipt **428** may be transmitted to the payor device **92**.

[0191] The payment receipt **428** may include information, such as the total payment amount for the transaction **375**, the method of payment (e.g., the credit card account **410**), and the time of the transaction **375** was processed. Additionally, in certain embodiments, the payment receipt **428** may indicate additional charges of fees associated with the transaction processing services collectively provided by the devices **10** and **92** and the financial servers **100** (e.g., including the bank server **380** and credit card server **382**) in carrying out the transaction **375**. Thus, it should be noted that in accordance with a further aspect of the present disclosure, various business methods may be provided in which a transaction fee is charged to one or both of the payee and payor. The fee may be charged each time a transaction request is processed, or may be a flat fee based on a monthly subscription service, for example. Additionally, an agreement may be reached in which the transaction fees may be apportioned among one or more of the entities providing the transaction services, including the banking provider (e.g., associated with the financial server **380**), the credit card provider (e.g., associated with the credit card server **382**), or the device manufacturer(s) (e.g., manufacturer of the devices **10** and **92**) for instance. In accordance with one embodiment, the transaction fees may initially be collected by a single entity (e.g., the banking provider), and later apportioned in an agreed manner amongst the remaining entities (e.g., the credit card provider and device manufacturer(s)).

[0192] Continuing now to FIG. **12**B, a schematic diagram representing an alternate embodiment a transaction in accordance with the presently described techniques is illustrated and generally referred to by reference numeral **376**. As discussed above, the transaction **376** may be similar to the transaction **375** described in FIG. **12**A, except that the payment account selected by the payor may be a bank account rather than a credit card account. As discussed above, the payee device **10** may initially transmit a payment request **384** to the payor device **92** by way of the NFC connection **388**, which may be established as a result of the tap operation **386**. Upon receiving the payment request **384**, the payor may select a bank account stored on the payor device **82** as the payment account and transmit the bank account information **440** to the payee device **10** using the NFC connection **388**.

[0193] After receiving the bank account information **440** on the payee device **10**, the payee may select a crediting account, as discussed above, and then transmit the transaction information **442**, which may include the selected payment account (e.g., **440**), crediting account, and payment request information **384** to the financial server **380** by way of the network **416**. As discussed above, the financial server **380**, which may correspond to a banking provider that maintains the payee's selected crediting account, may initiate one or more authorization steps, such as determining whether the specified payment account and crediting account are compatible. The financial server **380** may then transmit the payor's bank account information, represented by reference **444** to a second financial server **418** that is associated with the payor's banking provider. In other words, the present transaction **376** illustrates a scenario in which the bank accounts selected by the payee and payor are maintained by two different banking providers (e.g., different financial institutions).

[0194] The transmission of the bank account information **444** to the financial server **418** may be accomplished by way the network **420**. Once the bank account information **444** is received, the financial server **418** may determine whether the account is a valid account, and whether the account contains the sufficient funds to satisfy the requested payment **384**. If the financial server **418** determines payment request **384** may be authorized with regard to the bank account **444**, an authorization message may be transmitted to the financial server **380** via the network **420**. As discussed above, the financial server **380** may then complete the processing of the requested transaction **376**, as illustrated by reference numeral **448**, in which an amount corresponding to the requested payment is debited from the payor's bank account and subsequently deposited to the payee's crediting account.

[0195] Thereafter, once the transaction has been successfully processed, a transaction confirmation message **450** may be transmitted to the payee device **10** by way of the network **416**. The transaction confirmation message **450** may generally indicate to the payee that the requested payment **384** has been applied to the crediting account, thus completing the transaction **376**. Additionally, a payment receipt **428** may also be transmitted to the payor device **92** using one or the various available networking connections, as discussed above.

[0196] Referring now with FIG. **12**C, another schematic diagram of a transaction in accordance with a further embodiment is illustrated and generally referred to by reference numeral **378**. Specifically, FIG. **12**C illustrates a transaction process that may be similar to the transaction **376** described with reference to FIG. **12**B, but in which the payment account and the crediting account are bank accounts maintained by the same bank provider. As will be described in detail below, in the present embodiment, the one or more financial servers denoted by reference numeral **100** in FIG. **4**, may only require a single financial server **380**.

[0197] To initiate the transaction process **378**, the payee device **10** may transmit a payment request **384** to a payor device **92** in a manner similar to that described above with regard to FIGS. **12**A and **12**B. For example, the transmission of the payment request **384** may be accomplished by tapping **386** the payee device **10** to the payor device **92**, thus establishing an NFC connection **388** for the transfer of data. Once the payment request **384** is received, the payor may select a bank account as the payment account. Thereafter, the payor device **92** may transmit banking information **458** related to the selected bank account to the payee device **10** by way of the NFC connection **388**.

[0198] Upon receiving the banking information **458** from the payor device **92**, the payee may select a crediting account to which the requested payment **384** is to be credited. As noted above, in the presently illustrated scenario the selected crediting account and the provided payment account **458**,

collectively referred to herein as the transaction information **460**, may both be accounts held by the same banking provider. Thus, the transaction information **460** may then be transmitted by way of the network **416** to the financial server **380** which may be associated with the common banking provider for both the payment and crediting accounts.

[0199] The financial server **380** may then perform the steps of verifying the validity of the provided accounts, as well as determining whether the payment account contains the sufficient funds to fulfill the payment request **384**. It should be noted that unlike the embodiments described in FIGS. **12**A and **12**B, the financial server **380** is not required to transmit account information to a second external server, such as the credit card verification server **382** of FIG. **12**A or the second financial server **418** of FIG. **12**B due to the fact that a common banking provider maintains these accounts. Accordingly, the information pertaining to the crediting account and the selected payment account **458** is stored and accessible by the financial server **380**. Accordingly, once the financial server **380**, has verified that both the crediting and payment accounts are valid, and that the payment account contains the sufficient funds to fulfill the requested payment **384**, the financial server **380** may process the transaction, as indicated by reference numeral **464** such that the requested payment is debited from the payor's bank account and subsequently deposited to the payee's crediting account, as discussed above. Upon completion of the transaction **378**, a transaction confirmation message **466** may be transmitted from the financial server **380** to the payee device **10** by way of the network **416**. Additionally, a payment receipt **428** may be transmitted to the payor device **92** using the available networking connections mentioned above.

[0200] Having described the various embodiments depicting device-to-device transactions (e.g., between a payor device **92** and a payee device **10**) with respect to the transactions **375**, **376**, and **378** depicted in FIGS. **12**A, **12**B, and **12**C, respectively, various techniques for operating the payee device **10** and the payor device **92** to accomplish the foregoing transactions **375**, **376**, and **378** are further illustrated in FIGS. **14**A-**14**J by way of various screen images that may be displayed on either the payee device **10** or the payor device **92**, as well as via schematic illustrations. Additionally, it should be noted that in the presently illustrated embodiment, the payee device **10** and the payor device **92** are both NFC-enabled devices.

[0201] Referring first to FIG. **14**A, a process by which the payee may operate the device **10** to transmit a payment request is illustrated. The actions depicted by these screen images may generally correspond to the step **332** of the method **328** illustrated in FIG. **11**A, as well as the transmission of the payment request information **384** to the payor device **92**, as discussed above. Additionally, the actions depicted herein may be performed from the point of view of the payee and thus, the actions depicted in these screens will be described as being performed by the payee.

[0202] As shown in the present figure, the process may begin from the screen **110** which, as discussed above, may represent a "home screen" for the transaction application **34**. From the screen **110**, the payee may select the graphical button **114**, which may then advance the payee to the screen **476**. The screen **476** may display a plurality of graphical buttons **478**, **480**, and **482**. Each of these graphical buttons may represent a particular function that may be performed when selected by the payee. For instance, in the illustrated embodiment, the graphical button **478** may represent a function by which the user may initiate a payment request. The graphical button **480** may represent a function by which the user may send a payment to another device. Additionally, the graphical button **482** may allow the user to initiate a transaction between two or more other parties. The functions represented by the latter two graphical buttons **480** and **482** will be described in further detail below.

[0203] To initiate a payment request, the payee may select the graphical button **478**, which may further advance the payee to the screen **484**. Like the screen **476**, the screen **484** may also display a plurality of graphical buttons **486**, **488**, and **490**, each of which may represent specific functions. As shown here, the graphical button **486** may represent a function by which the payee may initiate a payment request using the NFC device **46**. This function may generally correspond to the techniques described above with respect to the transactions **375**, **376**, and **378**. Additionally, the graphical buttons **488** and **490** may represent additional functions available on the device **10** through which transactions may be initiated and will be described in further detail below.

[0204] By selecting graphical button **486**, the payee may proceed to the screen **492**. As shown in FIG. **14**A, the screen **492** may include the text fields **496**, **498**, and **500** by which the payee may enter information relating to the payment request. For instance, the text field **496** may be used to enter the identify of the payee, the text field **498** may be used to specify the amount of the payment being requested, and the text field **500** may allow the payee to include a descriptive message regarding the nature or reason for the requested payment. As shown in the screen **492**, the required information may be entered into the text fields **496**, **498**, and **500**, by way of the text keyboard **160** or the numerical keyboard **164** (e.g., via selection of the graphical button **162**). Once the required information is entered into the text fields **496**, **498**, and **500**, the payee may transmit the entered information in the form of a payment request (e.g., **384**) to a payor device **92** by selecting the graphical button **504**.

[0205] The function represented by the graphical button **504** may correspond to executing an instruction to power on the NFC device **46** of the payee device **10**, thus placing the device **10** into an NFC active mode and enabling the NFC interface **60**, as described above. For example, referring now to FIG. **14**B, upon the selection of the graphical button **504**, the screen **508** may be displayed on the payee device **10**. The screen **508** may include a notification message **510** indicating that the NFC interface **60** of the payee device **10** is presently active and capable of establishing an NFC connection with an external device for the transmission of the payment request information entered in the screen **492**. Accordingly, the notification message **510** may further instruct the payee to tap (e.g., **386**) the payee device **10** to a second device, such as a payor device **92**, in order to establish the NFC connection.

[0206] Referring briefly to FIG. **14**C, the establishment of an NFC connection **388** between two devices, namely the payee device **10** and the payor device **92**, by way of the tap operation **386** is illustrated. As discussed above, the NFC device **46** of the payee device **10** may be powered on upon the selection of the graphical button **504** illustrated in FIG. **14**A, thus placing the device **10** into a host mode or active mode, as indicated by reference numeral **392**, in which the active device **10** may periodically emit NFC transmission ping messages **400**, as discussed above with reference to FIG. **13**. As the active device **10** is placed within an acceptable distance

514 (e.g., 2-4 cm) from the payor device **92**, which may presently be in a passive or wake on NFC mode, as illustrated by reference numeral **390**, the payor device **92** may transition from the passive to an active mode in which the NFC device **46** within the payor device **92** is powered on, thus enabling the payor device's **92** corresponding NFC interface **60** and providing the establishment of the NFC connection **388** between the payee device **10** and the payor device **92** through which the payment request may be transmitted.

[0207] Although the payor device **92** illustrated in FIG. **14**C is depicted as being a portable device similar to the payee device **10**, it should be understood that in alternate embodiments, the payee device **92** may also include non-portable devices, such as a personal computer, a computing workstation, a payment terminal, or the like. For instance, referring now to FIG. **14**D, the establishment of the NFC connection is depicted in which the payee device **10** is tapped to a non-portable desktop computer, illustrated here by reference numeral **515**. Thus, it should be understood that embodiments of the present disclosure are intended to provide for the initiation and processing of transactions between any suitable types of electronic devices, whether portable or non-portable.

[0208] Returning to FIG. **14**B, once the payee device **92** is tapped **386** to the payor device **92**, the payor device **92** may detect the NFC transmissions (e.g., ping messages **400**) being emitted from the payee device **10**, and transition from a passive to an active mode, whereby the corresponding NFC device **46** of the payor device **92** is powered on. As shown in FIG. **14**B, once the devices **10** and **92** have been tapped and NFC transmissions being emitted from the payee device **10** are detected, the screen **516** may be displayed on the payor device **92**. The screen **516** may include a notification message **518** informing the payor that an NFC transmission has been detected and that in response, the corresponding NFC device **46** of the payor device **92** is being powered on and the corresponding NFC interface **60** enabled. The notification screen **516** may further provide a graphical button **520** by which the payor may cancel the NFC connection process if selected.

[0209] If the establishment of the NFC connection **388** is permitted on the payor device **92**, then the screen **508** displayed on the payee device **10** may be updated to display the notification message **522**. The notification message **522** may indicate that an NFC connection (e.g., **388**) has been established between the payee device **10** and the payor device **92** and that through the NFC connection **388**, the payment request information specified by the payee on the screen **492** of FIG. **14**A is being transmitted to the payor device **92**. The screen **508** may also include the graphical button **512** by which the payee has the option of canceling the payment request either prior to or during the transmission of the payment request information.

[0210] Meanwhile, the notification screen **516** displayed on the payor device **92** may similarly be updated to display the notification message **524**. The notification message **524** may indicate to the payor that the NFC connection **388** has been established between the payor device **92** and the payee device **10**, and that payment request information is presently being transmitted from the payee device **10** and received by way of the corresponding NFC interface **60** in the payor device **92**.

[0211] As can be appreciated, the interactions between the payee device **10** and the payor device **92** described in FIG. **14**B may generally correspond to one or more of the steps depicted in the methods **328** and **360** illustrated in FIGS. **11**A and **11**B, respectively. For instance, the actions illustrated in the screen **508** may represent the step **334** of transmitting an invoice to the payor. Referring briefly to FIG. **15**A, which depicts various steps of the method **328** in greater detail in accordance with the present embodiment, the step of transmitting of payment request information to a payor (e.g., step **334**) may include establishing an NFC connection, such as by way of the tap operating **386**, as indicated by step **530**. Additionally, the performance of the step **334** may further include transmitting the payment request information entered in the screen **492** to a payor device **92** using the established NFC connection, as represented by the step **532**. Further, the screen **516** which may be displayed on the payor device **92** upon the detection of an NFC transmission from the payee device **10** may represent the step **364** of receiving a payment request in the method **360**. For instance, referring now to FIG. **15**B, the step **364** may be described in further detail in accordance with the presently illustrated embodiment. For example, the step **364** of receiving the payment request may, in accordance with the present embodiment, may include the act of joining an NFC connection by way of a tap operation, as illustrated by step **534**. Additionally, once the NFC connection is established the payor device **92** may receive the payment request information transmitted from the payee device **10** using the NFC connection, as illustrated by step **536**.

[0212] As described above, specifically with reference to FIGS. **12**A-C, the payor, in response to a payment request **384** received from the payee device **10**, may select an appropriate payment method on the payor device **92**. For example, the selected payment account may include a credit card account (e.g., **410**), a bank account (e.g., **440**) provided by a different banking provider with respect to the bank provider associated with the payee's crediting account (e.g., **440**), or a bank account (e.g., **458**) in which the banking provider also manages the payee's crediting account. The selection of these various types of payment accounts may be illustrated by various screen images that may be displayed on the payor device **92**, as depicted by FIGS. **14**E-**14**G.

[0213] Referring first to FIG. **14**E, once the payment request information has been received by the payor device, the screen **516** may be updated to display the details **540** of the payment request, which may generally reflect information entered by the payee into the fields **496**, **498**, and **500** on the screen **492** of FIG. **14**A. Additionally the screen **516** may include the graphical buttons **542** and **544**, by which the user may either accept or decline the payment request, respectively. As shown in FIG. **14**E, if the payor selects the graphical button **542**, the payor may be advanced to the screen **546**. The screen **546** may list the some or part of the received payment request information. For instance, the screen **546** display the identity of the payee **550** and the requested payment amount **552**. The screen **546** may also display information pertaining to the identity of the payor, as indicated by reference numeral **548**. In the illustrated figure, the payor identify information **548** may include the name of the payor, as well as an associated e-mail address identifying the payor. Accordingly, the displayed e-mail address may be transmitted to the payee device **10** and utilized by the transaction process, such as for the sending of the payment receipt **428** described above.

[0214] The screen **546** may further display the presently selected payment account **554**. As shown here, the current selected payment method **554** may be the default or preferred payment method which may have been selected by the payor, such as by using one or more of the techniques described above with reference to FIG. **7**. Additionally, the screen **546**

may include the graphical buttons **558**, **560**, and **562**. The graphical button **558** may represent a function by which the payor may initiate the transmission of the payment information using the default payment account **554**. The graphical button **560** may represent a further function by which the user may select an alternate method of payment. Thus, if the payor prefers to use an account other than the account **554** as the payment account in the present transaction, the payor may do by selecting the graphical button **560**. Additionally, the payor may have the option of canceling the transaction through the selection of the graphical button **562**.

[0215] If the payor chooses to select a payment account other than the currently selected default payment account **554**, the payor may select the graphical button **560** to access the screen **566**. The screen **566** may display a plurality of graphical buttons **570**, **572**, **574**, **576**, and **578** representing account categories. In certain embodiments, such as the presently illustrated embodiment, each of the categories represented by the buttons **570**, **572**, **574**, **576**, or **578**, may be further subdivided into additional sub-categories. By way of example, the selection of the credit card account category, represented by the graphical button **570**, may advance the payor to the screen **580**, which may display the graphical buttons **584**, **586**, **588**, **590**, and **592** representing various sub-categories of credit card account types that may be selected by the payor. Referring back to the screen **146** of FIG. **5**A, the credit card account sub-categories for the credit card accounts represented by the graphical buttons **584**, **586**, **588**, **590**, and **592** may correspond to one or more of the credit card categories provided in the drop-down field **154**. Additionally, the payor may also have the option of viewing all available credit card accounts presently stored on the payor device **92** by selecting the graphical button **594**.

[0216] The payor may also choose to view all available payment accounts (e.g., not limited to just credit card accounts) before making a payment account selection. For example, by selecting the graphical button **118** on the screen **580**, the payor may be returned to the previous screen **566**. Here, the payor may select the graphical button **578** to access a listing of all selectable payment accounts stored on the payor device **92**, which may be provided by the screen **598**. In the illustrated embodiment, the screen **598** may display a listing of all the currently stored and available payment accounts by categories. For example, the available payment accounts may be grouped according to credit card accounts **600**, bank accounts **602**, as well as additional accounts **604**, including a non-cash iTunes® account, as generally described above.

[0217] As shown in the listing of the stored credit card accounts **600** on the screen **598**, the available credit card accounts may include the presently selected default payment account **554**, as well as an alternate credit card account **602**. Thus, as illustrated on the screen **598**, if the payor does not wish to use the default payment account **554** to provide the requested payment **384**, the payor may select the alternate credit card account **602** as the payment account. Upon selecting the alternate credit card account **602**, the payor may be returned to the screen **546**, which may be updated to indicate the selection of the credit card account **602** as being the payment account for the present transaction. Additionally, the updated screen **546** may display the graphical button **606**, which may replace the previously displayed graphical button **558**. The graphical button **606** may represent a function by which the payor may initiate the sending of the credit card account information **602** to the payee device **10**.

[0218] Alternatively, if the payor may choose accounts other than the listed credit card accounts **600** as the selected payment account. For instance, the user may select a bank account from the listing **603** or a non-cash account from the listing **604**. Referring now to the screen images depicted in FIGS. **14**F and **14**G, these images illustrate a method by which the payor may select a bank account as the payment account. Specifically, FIG. **14**F illustrates the selection of a bank account, in which the selected bank account and the payee's crediting account are maintained by different banking providers, such as described in the transaction **376** in FIG. **12**B. FIG. **14**G illustrates the payor's selection of a bank account and may correspond to the transaction **378** depicted by FIG. **12**C, in which the selected payment account and the payee's crediting account are maintained by the same banking provider.

[0219] As shown in FIG. **14**F, the payor may navigate to the screen **566** by first selecting the graphical button **542** on the screen **516** and then selecting the graphical button **560** on the screen **546** as discussed above. At the screen **546**, rather than selecting the graphical button **570** or **578**, as described above, the payor may select the graphical button **572** to access the screen **610**, which may display the listing **603** of bank accounts stored on the payor device **92** that may be used as a payment account. As illustrated in the present embodiment, the payor may select the bank account **612**. Thereafter, the payor may be returned to the updated screen **546** which may reflect the selection of the bank account **612** as the payment account for the present transaction. It should be noted that the bank account **612** is associated with a banking provider (e.g., Wells Fargo®) that may be different from the banking provider (e.g., Wachovia®) associated with the default crediting account **216** selected by the payee, as discussed above with reference to the screen **270** in FIG. **8**. Thus, as explained above with reference to FIG. **12**B, the authorization and processing of a transaction in accordance with the actions depicted by the screens of FIG. **14**F may require a communication to occur between separate financial servers (e.g., the financial servers **380** and **418**) associated with each respective banking provider.

[0220] FIG. **14**G similarly illustrates the selection of a bank account by the payor that may share a common banking provider with the payee's crediting account, such as depicted by the transaction **378** in FIG. **12**C. Beginning with the screen **516**, the payor may select, in the following order: the graphical button **542** to navigate to the screen **546**, the graphical button **56**b to navigate to the screen **566**, and the graphical button **572** to access the listing **603** of bank accounts on the screen **610**. Here, rather than selecting the bank account **612**, the payor may select the bank account **614**. It should be noted that bank account **614** and the payee's default crediting account **216** are associated with the same banking provider (e.g., Wachovia®). Accordingly, upon selection of the bank account **614** the payor may be returned to the screen **546**, which may be updated to reflect the selection of the bank account **614** as the payment account for the present transaction. Additionally, as discussed above with reference to FIG. **12**C, a transaction in accordance with the actions depicted by the screens of FIG. **14**G may be authorized and processed by a single financial server (e.g., **380**).

[0221] As discussed above, a device, such as the payee device **10** or the payor device **92**, may include one or more

security features, such as the use of an authorization PIN code, such as the PIN **286** described above in FIG. **9**. As will be appreciated, the use of an authorization PIN code may prevent unauthorized payments from being made from the payor device **92** or the payee device **10**. By way of example, the payor may configure the device (e.g., through one or more user preference settings) such that an authorization PIN code must be provided in order to authorize the sending and transmission of payment information from the payor device **92**.

[0222] Continuing now to FIG. **14**H, once a payment method, such as the alternate credit card account **602** has been selected, as indicated on the screen **546**, the payor may proceed with the payment by selecting the graphical button **606**. Thereafter, the screen **620** may be displayed on the payor device **92** and may include an instructional message **622** instructing the user that the authorization PIN code must be entered in order to complete the transaction. Accordingly, the payor may input the proper authorization PIN code **624** into the text field **626** by way of the numerical keyboard **164**. As discussed above, it should be appreciated that the device may support the use of alphanumeric authorization pin codes. In such embodiments, the user may toggle between a numerical keyboard **164** and the text input keyboard **160** (not shown in FIG. **14**H) by selecting the graphical button **166**. Additionally, while the use of the authorization PIN code **624** has been illustrated in FIG. **14**H with regard to the selection of the credit card account **602** in FIG. **14**E, it should be appreciated that the authorization PIN code **624** may also be implemented with regard to the embodiments illustrated by FIGS. **14**F and **14**G as well, where the selected payment method is a bank account, as well as with any other type of payment method that may be selected on the payor device **92**.

[0223] Once the proper authorization PIN code **624** has been entered, the user may authorize and send the payment information to the payee device **10** by selecting the graphical button **628**. Upon selection of the graphical button **628**, the screen **630** may be displayed on the payor device **92** and may indicate, as represented by the reference numeral **632**, that the NFC device **46** of the payor device **92** has been powered on, thus enabling the corresponding NFC interface **60** and placing the payor device **92** into an active or host mode, as discussed above. The notification message **632** may further instruct the payor to perform a tap operation to the receiving device, in this case, the payee device **10**. Additionally, the screen **630** may include the graphical button **634**, by which the payor may select in order to cancel the sending of the payment information if necessary.

[0224] Continuing now to FIG. **14**I, this figure generally depicts a tap operation and subsequent establishment of an NFC connection between the payor device **92** and the payee device **10**. As discussed above in FIG. **14**H, the screen **630** which may be displayed on the payor device **92** may include the instructional message **632** indicating to the payor that the payor device **92** is currently in an active mode, and further instruct the payor to perform a tap operation, such as the tap operation **412** depicted in FIG. **12**A, to the payee device **10**. Thus, once the payor device **92** and the payee device **10** are placed within proximity of each other, such that the distance between the two devices is sufficient for the establishment of an NFC connection, the payee device **10** may detect the NFC transmissions being emitted from the payor device **92**, such as the ping messages **400** as described above.

[0225] Upon detection of the NFC transmissions from the payor device **92**, the payee device may activate its own corresponding NFC device **46**. Further, the screen **638** may be displayed on the payee device **10** including the notification message **640** indicating to the payee that an NFC transmission has been detected and that the NFC device **46** of the payee device **10** is being powered on. The notification screen **638** may also further include the graphical button **642**, which provides the payee with an option to cancel the establishment of an NFC connection if so desired. Thus, if the payee permits the establishment of the NFC connection, the screen **630** displayed on the payor device **92** and the screen **638** displayed on the payee device **10** may each be updated to display the notification messages **644** and **646**, respectively. The notification message **644** displayed on the send payment information screen **630** may indicate to the payor that an NFC connection has been established and that the payment information **410** which may include, for example, the credit card account **602** selected in FIG. **14**E, is being transmitted to the payee device **10**. At the same time, the notification message **646** displayed on the screen **638** of the payee device **10** may indicate to the payee that the NFC connection has been established, and that the payment information **410** is being received on the NFC interface **60** of the payee device **10**.

[0226] The actions depicted by the screens shown in FIGS. **14**E-**14**I, may generally represent the step of providing payment information to the payee, as indicated by step **336** of the method **360** depicted and described above in FIG. **11**B. Referring again to FIG. **15**B, the step **366** of providing the payment information to the payee is illustrated in further detail. For instance, upon receiving the invoice information (step **536**), a determination may be made on the payor device **92** as to whether or not to accept the received payment information, as illustrated by step **650**. This step may correspond to the selection of the graphical button **542** on the screen **516**, as discussed above.

[0227] Once the payment request information is accepted, the payor, at step **652**, may further proceed with the step of selecting a payment account from which the payment request is to be debited or charged. This step may generally be represented by the selection of the alternate credit card account **602** depicted in FIG. **14**E, or the selection of the bank accounts **612** or **614** depicted in FIG. **14**F and FIG. **14**G, respectively. Thereafter, once an appropriate payment account is selected, an NFC connection may be established by a tapping operation, as indicated at step **654**, thereby establishing an NFC connection between the payor device **92** and the payee device **10**, as discussed above, at step **654**. Next, at step **656**, the selected payment account information from step **652** may be transmitted to the payor device **10** by way of the established NFC connection. Referring to FIG. **14**I, the transmission of the payment information at step **656** may correspond to the transmission of the payment information **410** from the payor device **92** to the payee device **10**.

[0228] Additionally, from the point of view of the payee, the steps of establishing the NFC connection by way of the tap operation **412**, as well as the receipt of the payment information **410**, may correspond to the step **336** of the method **328**, which represents the acquisition of the payment information **410** from the payor device **92**. This step is further described FIG. **15**A, in which the step **336** is illustrated in additional detail in accordance with the presently illustrated transaction. Referring to FIG. **15**A, step **336** may include the step of first joining an NFC connection established through a tap operation, such as the tap operation **412**, represented here by reference numeral **660**. Following the establishment of the NFC

connection, the payee may, at step **662**, receive the payment account information (e.g., **410**) corresponding to the selected payment account (e.g., step **652**). Once the payment information is received by the payee device **10**, the step of selecting a crediting account, as depicted by step **338** in FIG. **15**A, may be performed on the payee device **10**.

[0229] Referring now to FIG. **14**J, the selection of the crediting account by the payee is illustrated by the screens **638** and **674** in accordance with one embodiment of the disclosure. Referring first to the screen **638**, once the payment information **410** is received by the payee device **10**, the screen **638** may be updated to display the notification message **668**. The notification message **668** may include information pertaining to the identity of the payor, as well as the amount of the requested payment. In response to the notification message **668**, the payee may either accept the offered payment by selecting the graphical button **670** or, alternatively, may choose to cancel the payment process by selecting the graphical button **672**. If the payee chooses to accept the payment by selecting the button **670**, the payee may be navigated to the screen **674**.

[0230] As shown in FIG. **14**J, the screen **674** may display the payee identity information **676** and the payor identity information **678**. The payee identity information **678** may display both the name of the payor as well as one or more additional identifying attributes, such as an e-mail address, for example. As described in detail above, upon the successful completion of the transaction, a payment receipt, such as the payment receipt **428**, may be sent to the payor's e-mail address specified in the payor identity information **678**.

[0231] The screen **674** may further include the payment amount information **680**, the payment method information specified by the payor, represented by reference numeral **682**, as well as a crediting account to which the requested payment is to be credited. As shown on the screen **674**, a crediting account may be initially selected as a default crediting account **216** specified by the payee during the configuration of device preferences, as discussed above with reference to FIG. **8**. Additionally, the screen **674** may include the graphical button **686** by which the user may initiate the process of crediting the requested payment to the default crediting account **216**, the graphical button **688** by which the user may select an alternate crediting account, as well as the graphical button **690** by which the user may cancel the pending transaction.

[0232] If the payee chooses to credit the payment to the default crediting account **216**, as illustrated by the selection of the graphical button **686**, the authorization and verification steps depicted by the decision block **340** in FIG. **11**A, may be performed. The decision logic and determination steps that may take place in the decision block **340** are illustrated in further detail in FIG. **15**A. As shown in FIG. **15**, once the payee has selected the crediting account at step **338** and initiated the processing of the transaction information, such as by selecting the graphical button **686** on the screen **674**, both the payment account (e.g., **602**) selected by the payor and the crediting account (e.g., **216**) specified by the payee may be transmitted, as indicated by step **694**, to one or more financial servers (e.g., **100**) for verification of the account information and authorization of the requested transaction. For example, as discussed above, specifically with reference to FIGS. **12**A-**12**C, the one or more financial servers **100** may include a bank server, a credit card server, or some combination thereof, depending on the types of accounts provided by the payee and the payor.

[0233] Continuing now to step **696**, a determination may be made by the financial servers as to whether the selected payment and crediting accounts are compatible. As discussed above, the case may arise in which the crediting account specified by the payee may not be authorized or configured to accept payments from the payment account selected by the payor. To provide one example, the payment and crediting account may not be compatible if the crediting account is a bank account that is not authorized to receive payments directly from a credit card account. For instance, referring back to FIG. **14**J the screen **700** showing the notification message **702** may be displayed if it is determined by the financial servers **100** that the selected payment and crediting accounts are not compatible.

[0234] The method depicted in FIG. **15**A may then proceed to the decision step **342** in which the payee has the option of renegotiating the payment terms by selecting an alternate crediting account, thus returning the method back to step **338**. For example, the renegotiation of payment terms may be performed by selecting the graphical button **704** on the screen **700** of FIG. **14**J. Alternatively, the payee may renegotiate the selection of a different payment account by the payor, thereby returning the method to step **662**. Further, if at decision step **342** the payee chooses not to renegotiate the payment terms, then the payee may cancel the transaction, as indicated by step **344**, such as by selecting the graphical button **706** on the screen **700**.

[0235] Returning to the decision step **696**, if it is determined that the payment and crediting account specified by the payor and the payee are compatible, then the method may proceed to the decision step **698**, in which a determination may be made by the one or more financial servers **100** as to whether the payment account is valid and contains the sufficient funds to satisfy the requested payment. If it is determined that the specified payment is either invalid or does not contain sufficient funds to satisfy the requested payment, the method may return to decision step **342**, in which the payee has the options either canceling the transaction at step **344**, or renegotiating the terms of the transaction, such as by requesting that the payor provide another payment account that does contain the sufficient funds. As will be appreciated, this action may return the method back to step **662**. Referring again to FIG. **14**J, the notification message **708** may be displayed on the screen **700** if it is determined at step **698** that the payment account selected by the payor lacks the sufficient funds to satisfy the requested payment. Accordingly, the screen **700** may include the graphical button **710** by which the user may select in order to return to the payment request screen **484** discussed above in FIG. **14**A. Additionally, as discussed above, the payee may also cancel the transaction by selecting the graphical button **706**.

[0236] If it is determined at step **698** that the specified payment and crediting accounts are both valid and that the payment account has the sufficient funds, then the transaction may be authorized by the financial servers and processed, wherein the amount specified in the payment request may be debited from the payment account and credited to the crediting account. For instance, as discussed above with reference to FIG. **12**A, once the selected payment credit card account (e.g., **602**) is verified, the credit card server **382** may send an authorization message to the financial server **380** indicating

that the transaction has been approved for processing, as represented by block **424**. Thereafter, once the transaction is processed, the payee may receive a payment, as indicated at step **346** of the method **328** in FIG. **11**A. Additionally, from the viewpoint of the payor, a determination may made at step **368** of the method **360** in FIG. **11**B as to whether the transaction was processed and completed successfully. If it is determined that the transaction failed for any reason, such as those depicted by the notification messages **702** and **708** in FIG. **14**J, then the payor's account is not charged at step **370**.

[0237] Similarly, if it is determined that the transaction was processed successfully, then the payor's account may be debited for the amount specified in the payment request at step **372**, as discussed above. For example, referring again to FIG. **14**J, upon the successful completion of a transaction, the screen **712** may be displayed on the payee device **10**. The screen **712** may include the notification message **714** informing the payee that the requested payment amount **680** has been credited to the selected crediting account **216**. The notification message **714** may further indicate to the payee that a payment receipt (e.g., **428**) for the present transaction has been sent or transmitted to the payor. As discussed above, a payment receipt in an electronic form may be e-mailed to the payor using the e-mail address provided in the payor identification information **678** on the screen **674**. The transaction notification screen **712** may further include the graphical buttons **716** and **718**. The graphical button **716** may be selected in order to initiate a subsequent transaction. For example, by selecting the graphical button **716**, the payee may be returned to the transaction initiation screen **476** described above in FIG. **14**A. Additionally, the user may exit the transaction application **34** by selecting the graphical button **718**, thereby returning to the home screen **29** of the payee device **10**, for example.

[0238] While the techniques and screen images associated with the transactions described above with regard to the embodiments illustrated in FIGS. **12**A-C and FIGS. **14**A-J specifically rely on the initiation of a transaction by a payee, such as via sending a payment request (e.g., **384**) from the device **10**, it should be appreciated that in additional embodiments, the payor may initiate the transaction as well. For instance continuing now to FIGS. **16**A and **16**B, these figures collectively illustrate methods from the viewpoints of the payor and the payee, respectively, in which a transaction may be initiated by a payor and subsequently processed by a payee using the techniques generally discussed above.

[0239] Referring first to FIG. **16**A, a method **730** for initiating a transaction from the viewpoint of the payor is illustrated. The method **730** begins with a selection of a payment method at step **732**. As described above, the selection of the payment method may include selecting a payment account from one or more payment accounts stored upon a device, such as the payor device **92**. Once a payment account is selected, the payment information corresponding to the selected payment account may be transmitted or sent to a payee, as indicated by step **734**. As discussed above, the transmission of the payment information may occur through a communication channel established between a payor device **92** and a device belonging to the payee, such as the device **10**. In the above-discussed embodiments, this communication channel may include an NFC connection, but may also include additional communication channels established via other communication interfaces that may be available on the payee device **10** and the payor device **92**, such as those illustrated in FIG. **3** by the communication interface **56** (e.g., WAN, LAN, WLAN, PAN, etc.). Next, at decision step **736**, a determination is made as to whether the transaction initiated by the payor is successfully completed. For example, as discussed above, the successful completion of a transaction may result in the payee's selected crediting account being credited with a payment from the payment account selected at step **732**. If it is determined that the transaction did not complete successfully, then the payor's payment account will not be charged, as indicated at step **738**.

[0240] Returning to step **736**, if it is determined that the transaction initiated by the payor is completed successfully, then the method may proceed to step **740**, where the payor's selected payment account is charged for an amount that may be specified in the payment information sent at step **734**, as discussed above. Finally, after the payor's account is charged at step **740**, the payor may receive a receipt from the payee, as indicated at step **742**, which may serve as an acknowledgement that the payment sent by the payor has been received. As discussed above, in some embodiments, the receipt may be in electronic form and received by the payor through an e-mail address.

[0241] Referring now to FIG. **16**B, a method for responding to the transaction initiated by the payor in the method **730** of FIG. **1 6**A and subsequently processing the transaction is illustrated and generally referred to by reference numeral **746**. The method **746** may begin at step **748** wherein payment information is received by the payee. By way of example, the payment information received by the payee at step **748** may correspond to the payment information sent by the payor at step **734** of the method **730**. The payment information may include, for example, information with regard to a payment account selected by the payor, the identity of the payor, as well as the amount of the payment being sent by the payor. The payment information may be received using a device, such as the device **10** described above, using an NFC connection, for example.

[0242] Thereafter, at step **750**, the payee may select a crediting account to which the received payment is to be credited. For example, the crediting account may be selected by the payee from one or more crediting accounts stored on the payee device **10**. Once the appropriate crediting account is selected, the payee may initiate the account verification process by transmitting the account information, which may include both the payment account information sent by the payor, as well as the selected crediting account information from step **750**, to one or more financial servers configured to verify these accounts and to authorize a payment from the payment account to the selected crediting account. This account verification and payment authorization process is represented in FIG. **16**B by decision step **752**, in which a determination is made as to whether both the payment account and the crediting account as specified in the present transaction are valid, and whether a payment account is authorized and has the sufficient funds to perform the requested payment. If it is determined at step **752** that the transaction cannot be processed, such as for one or more of the reasons described above with regard to FIG. **14**J, for example, then the method **746** may proceed to decision step **754**.

[0243] At decision step **754**, the payee may have the option of renegotiating the terms of the transaction. As described above, this may include one or more of either selecting an alternate crediting account, or requesting that the payor pro-

vide an alternate payment account. Accordingly, if the payee decides to select an alternate crediting account, the method may return back to step **750**. Alternatively, if the payee chooses to request that the payor provide an alternate payment account, the method may return to step **748**, whereby the payee may then receive payment information relating to, for example, a newly selected alternate payment account. Additionally, the payee may also have the option of canceling the transaction, as indicated by step **756**, if a decision is made not to renegotiate the terms of the transaction at decision step **754**.

[0244] Returning to the decision step **752**, if it is determined that the payment account and the crediting account are both verified and that the payment from the payment account to the crediting account may be authorized, then the payee may receive the payment sent by the payor at step **758**. For example, the receipt of the payment at step **758** may include debiting the amount of the payment, such as specified in the payment information received at step **748**, from the payor's selected payment account, and thereafter crediting the same amount to the payee's selected crediting account, thus completing the transaction at step **760**. Additionally, the method **746** may further include sending a receipt acknowledging that the payment sent by the payor has been received by the payee, as indicated by step **762**. The transmission of the receipt at step **762** may correspond to the receipt received by the payor at step **742** of the method **730** illustrated by FIG. **16**A.

[0245] Continuing now to FIG. **17**A, a plurality of screen images depicting the initiation of the transaction on the payor device **92** is illustrated in accordance with the transaction described by FIGS. **16**A and **16**B. The payor device **92** may include a transaction application similar to the transaction application represented by the icon **34** and described above with reference to the payee device **10**. Upon execution of the transaction application, the transaction screen **110** discussed above in FIG. **5**A, may be displayed on the payor device **92**. From the transaction home screen **110**, a transaction may be initiated via selection of the graphical button **114**.

[0246] Upon selection of the graphical button **114**, the payor may be advanced to the screen **476**. The screen **476** may display the graphical buttons **478**, **480**, and **482**, as discussed above. As illustrated the payor may initiate the sending of a payment by selecting the graphical button **480**. Thereafter, the payor may be advanced to the screen **770**. The screen **770** may include a plurality of text fields, generally represented by the reference numeral **772**, in which the payor may input information by way of the text keyboard **160**. For instance, as illustrated on the screen **770**, the payor may input the identity of the payee **774**, the amount of the payment being sent to the payee **776**, as well as a brief description with regard to the purpose or nature of the payment **778**. The screen **770** may further include the graphical buttons **780** and **782**. Once the information **774**, **776**, and **778**, have been entered into the form fields **772**, the user may proceed to the screen **786** in order to select an appropriate payment method by selecting the graphical button **780**. Alternatively, the user has the option of canceling the transaction, and therefore, not sending a payment by selecting the graphical button **782**.

[0247] As shown on the screen **786**, the information pertaining to the payee's identity **774**, the amount of the payment being sent **776**, as well as the description regarding the payment **778**, may be displayed. Additionally, the screen **786** may further display the information pertaining to the identity of the payor, as depicted by reference numeral **788**. As discussed above, the payor identity information may include both the name of the payor, as well as an additional identifying attribute, such as an e-mail address. Also displayed on the screen **786** may be the selection of a payment method. As shown in FIG. **17**A, the selected payment method be initially selected as the default payment method **554**, discussed above with reference to FIG. **14**E.

[0248] The screen **786** may further include the graphical buttons **790**, **792**, and **794**. As discussed above, these buttons may correspond to specific functions that may be performed on the payor device **92** upon the selection of these buttons. For instance, the graphical button **790** may represent a function by which the payor may initiate the transaction using the default payment account **554** as the selected payment method. The graphical button **792** may represent a function by which the payor may be directed to one or more screens for the selection of an alternate payment method, such as those described above with reference to the screen **566** of FIG. **14**E. The payor may also have the option of canceling the payment by selecting the graphical button **794**.

[0249] The payee device **10** and the payor device **92** may each have configured thereon one or more security features. For instance, as described above with a reference to FIG. **14**H, the payor device **92** may require the entry of a previously stored authorization PIN code before the sending of a payment may be authorized. By way of example, as illustrated in FIG. **17**A, upon selection of the graphical button **790**, the payor may be advanced to the screen **620** discussed above in FIG. **14**H. The screen **620** includes a prompt **622** instructing the user to enter the authorization PIN code **624** into the text field **626** using the numerical keyboard interface **164**. Additionally, as discussed above the user may select the graphical button **166** to toggle between the numeric keyboard interface **164** and a text input keyboard interface **162** (not shown in FIG. **17**A). For instance, this feature may be implemented in embodiments where the device **92** supports alpha-numeric PIN codes including both text and number characters.

[0250] Once the authorization PIN code **624** has been entered, the payor may proceed to send the entered payment information from the screen **786** to the payee. For example, as discussed above with reference to FIG. **14**I, the sending of the payment information may be accomplished by way of an NFC connection established between the payor device **92** and the payee device **10** through a tap operation **412**. Accordingly, once the payor device **92** and the payee device **10** have been tapped and placed within a distance that is capable of supporting an NFC connection (e.g., 2-4 cm) between these devices, the payment information displayed on the screen **786** may be transmitted to the payee device **10** by way of the established NFC connection.

[0251] Continuing now to FIG. **17**B, once the payment information is received by the payee device **10**, the screen **800** may be displayed on the payee device **10**. The screen **800** may include the notification message **802** informing the payee that an offer for payment in the amount specified by the payor in the screen **770** of FIG. **17**A has been received. The screen **800** may further include the graphical buttons **804** and **806**. By selecting the graphical button **804**, the payee may be advanced to the screen **674**, as previously discussed above in FIG. **14**J. The screen **674** may display the information that was entered by the payor in the screen **770**, such as the identity of the payee **774**, the amount of the payment being sent **776**, as well as the method of payment selected by the payor, in this case, the default payment account **554**. The

screen **674** may further include the payor's identification information **788**, which may include the payor's e-mail, and may be used to send a receipt to the payor if the transaction is successfully completed. The screen **674** may further display the presently selected crediting account to which the payment is to be credited. As shown here, the selected crediting account is initially the default account **216** that was configured in FIG. **8**. To process the transaction based on these settings, the payee may select the graphical button **686**. As discussed above, the selection of the graphical button **686** may initiate a process by which the payment account **554** selected by the payor is debited for the amount **776**, which is then credited to the selected crediting account **216**. This process may involve verification and authorization of the transaction by one or more financial servers **100**, such as those described above in FIGS. **12**A-C.

[0252] Depending on whether the processing of the transaction is successful, the screens **700** or **712** discussed above in FIG. **14**J may be displayed on the payee device **10**. For instance, if the transaction failed for one or more reasons, the screen **700** may be displayed. The screen **700** may include a notification message **708** informing the payee as to the reason or reasons that the transaction failed. Additionally, the screen **700** may provide the payee with an option to either return to the screen **484**, such as by way of the graphical button **710**, as well as an option to cancel the transaction through the selection of graphical button **706**. If the transaction is successfully completed, the screen **712** may be displayed on the payee device **10**, displaying the notification message **714** informing the payee that the transaction has successfully completed and that the payment amount specified by the payor **776** has been credited to the selected crediting account **216**. The notification message **714** may further inform the payee that a receipt has been sent to the payor.

[0253] While the above-described embodiments all illustrate transactions involving the use of monetary instruments, such as credit card and bank accounts, it should be understood that the techniques set forth in the present disclosure may be applicable to other types of accounts representing a holding of some sort of medium of exchange, including the non-monetary and non-cash accounts described above (e.g., **126**, **604**). For example, a non-cash account may be an account associated with an online music vendor service, such as an iTunes® account, available through the iTunes® online digital media store/service operated and managed by Apple Inc.

[0254] An iTunes® account may operate on the basis of credits which may be exchanged or redeemed from an internet-based online virtual store for the purchase of music files (e.g., .mp3, .m4a) as well as other related types of media, such as podcasts, music videos, audio books, game applications, movies, or the like. Upon purchase, these media products may be stored on the device **10**, such as in the long term storage device **54** for later viewing or listening by the user. While the credits associated with an iTunes® account may not have monetary value in the real world, these credits may nevertheless be used as a non-cash medium of exchange with regard to products and services offered through the iTunes® service. Further, in accordance with aspects of the present disclosure, credits held by iTunes® accounts may be exchanged between account holders by way of the transaction techniques described above.

[0255] Before continuing the present discussion, it should be understood that the use of the iTunes® services offered by Apple Inc. are described herein merely by way of example and, that in accordance with the present disclosure, the techniques described here may be applicable to non-cash accounts provided by a number of online vendors, in which a non-cash medium of exchange (e.g., "credits") may be stored in these accounts and exchanged for products or services offered by the respective online vendor.

[0256] Referring now to FIG. **18**, the transaction techniques illustrated by FIGS. **17**A and **17**B are described now with reference to iTunes® accounts held by the payee and payor. Specifically, FIG. **18** illustrates a schematic representation of a transaction **808** in which a payment is initially sent from a payor device **92** to a payee device **10**, and wherein the payment information **810** sent to the payee specifies the an iTunes® account belonging to the payor as being the selected payment account. The payment information **810** may further indicate amount or number of credits which the payor wishes to transfer to the payee as a payment. In order to transmit the iTunes® account information to the payee device **10**, a tap operation **814** between the payee device **10** and the payor device **92** may be performed, thus establishing an NFC connection **812** through which the payment information **810** may be transferred.

[0257] After receiving the payment information **810** on the payee device **10**, the payee may select the appropriate crediting account to which the payee wishes for the payment indicated by the payment information **810** to be credited. For example, in the illustrated scenario, the selected crediting account may be a respective iTunes® account belonging to the payee. Thus, the payee's and the payor's iTunes® account information, as well as the payment amount (e.g., in credits) specified in the payment information **810**, may be collectively represented by the transaction information block **816**. Thereafter, the transaction information **816** may be transmitted by the payee device **10** to the one or more financial servers **100**, described above, for further processing of the transaction **808**.

[0258] As shown in FIG. **18**, the one or more financial servers **100** in the present embodiment may be represented by an iTunes® server **818** configured to maintain the respective iTunes® accounts belonging to the payor and the payee. As discussed above, specifically with reference to the transaction **378** depicted in FIG. **12**C, when both a payment account and a crediting account are held by the same entity or financial institution, it may not be necessary to communicate with an additional external server (e.g., belonging to a different entity or financial institution) for authorization and processing of the transaction.

[0259] The transmission of the transaction information **816** to the iTunes® server **818** may occur by way of a network **820**, which may be provided by any suitable networking interface available on payee device **10**, such as those specified by the communication interface block **56** in FIG. **3**. Upon receiving the transaction information **816**, the iTunes® server **818** may perform one or more verification actions, as indicated by reference numeral **822**, to verify that both of the iTunes® accounts are valid, and that the payor's iTunes® account has at least a sufficient number of credits in order to satisfy the payment amount specified in the payment information **810**. If it is determined that both iTunes® accounts are valid and that the payor's iTunes® account has sufficient credits, then the transaction may be processed, as indicated by reference numeral **824**. Thereafter, the iTunes® server **818** may transmit, by way of the network **820**, a confirmation message to the payee device **10** notifying the payee that the payee's iTunes® account has been credited with a payment.

Additionally, as represented by reference numeral **826**, upon receiving the confirmation, the payee device **10** (or the iTunes® server **818**) may further be configured to transmit a receipt to the payor device **92**, such as an electronic receipt using the payor's e-mail address, acknowledging that payor's iTunes® account has been debited or charged for the amount specified by the payment information **810**, thereby concluding the transaction **808**. The above-described transaction **808** may be better understood with reference to FIGS. **19**A-**19**D, in which a plurality of screen images depicting the transaction **808** illustrated by FIG. **18**A is illustrated.

[0260] Beginning first with FIG. **19**A, it should be noted that these screens are generally identical to those described above with reference to FIG. **17**A. For instance, beginning from the screen **110**, the payor may initiate the transaction process by selecting the graphical button **114**. Thereafter, the screen **476** may be displayed, and the payor may further select the graphical button **480** to specify that the transaction is to be initiated directly via the sending of the payment (e.g., without first awaiting for a request form the payee, as discussed above in FIGS. **12**A-**12**C). Upon selection of the graphical button **480**, the payor may be advanced to the screen **770**, whereby the form fields **772** may be completed using the text keyboard interface **160**. Thereafter, by selection of the graphical button **780**, the user may be further advanced to the screen **786**, which may display the payee identity information **774**, the payment amount **776**, as well as a brief description regarding the nature of the payment **778**. Additionally, the screen **786** may further include identity information pertaining to the payor **788**, as well as display the presently selected payment method. As shown here, the payment method may initially be selected as the default payment account **554**. Next, rather than selecting the graphical button **790** to initiate the payment using the default payment account **554**, as described above in FIG. **17**A, the payor may select the graphical button **792** in order to select the iTunes® account described in FIG. **18** as the selected payment method.

[0261] It should be noted that specified reason **778** for the present payment may represent a cash or monetary sum of a debt owed to payee by the payor, and may not necessarily be related to one or more of the services offered through the iTunes® service. Nevertheless, the present figures illustrate how an agreement may be reached between the payor and the payee to satisfy the debt using a non-cash asset, in this case, iTunes® credits.

[0262] Continuing to FIG. **19**B, upon selection of the graphical button **792**, the payor may be advanced to the screen **566** previously described above with reference to FIG. **14**E. As discussed above, the screen **566** may display a plurality of graphical buttons **570**, **572**, **574**, **576**, and **578**, each corresponding to a payment category which may be selected by the payor. As shown in FIG. **19**B, the payor may select the graphical button **574** in order to proceed to the screen **828**. The screen **828** may display a listing **604** of all iTunes® accounts presently stored on the payor device **92**. Accordingly, the payor may select the desired iTunes® account **830** for use as a payment account in the present transaction **808**.

[0263] Upon selection of the iTunes® account **830**, the payor may be returned to the screen **786** in FIG. **19**B, which may be updated to reflect the selected iTunes® account **830** as the payment method. Thereafter, the payor may select the graphical button **832** in order to proceed to the screen **620**. As discussed above, the payor device **92** may include one or more security features requiring that an authorization PIN code is first provided before transmitting payment information from the payor device **92**. For example, as shown in the screen **620**, the payor may be required to input the authorization PIN **624** into the text field **626**. Once the authorization pin code **624** is entered (e.g., via the numeric keyboard interface **164**), the payor may authorize the sending of the iTunes® account information **830** by selecting the graphical button **628**.

[0264] Continuing now to FIG. **19**C, the screens illustrated herein depict screen images that may be displayed on the payee device **10** upon receiving the iTunes® payment account information **830**. As discussed above, the receipt of the payment information **830** may be performed by establishing an NFC connection through a tap operation **814**, as depicted in FIG. **18**. Upon receiving the payment information **830**, the notification screen **800** may be displayed on the payee device **10**. The screen **800** may include a notification message **802** informing the payee that a payment in the amount indicated by the reference numeral **776** has been received from the payor **788**. The screen **800** may further display the graphical buttons **804** by which the user may proceed with additional steps to complete the processing of the transaction, and the graphical button **806**, by which the user may choose to cancel the present transaction.

[0265] For example, by selecting the graphical button **804**, the user may be advanced to the screen **674**, as described above in FIG. **14**J. The screen **674** may display the identity of the payee **774**, the identity of the payor **788**, the amount of the requested payment **776**, as well as the selected payment method, the iTunes® account **830**. As will be understood, the requested payment amount may in terms of "credits" stored in the payor's iTunes® account **830**. As shown in the screen **674** of FIG. **19**C, the crediting account may initially be selected as the default crediting account **216**. Here, rather than selecting the graphical button **686** to credit the payment to the default crediting account **216**, the payee may select the graphical button **688** in order to select an alternate crediting account.

[0266] Upon selection of the graphical button **688**, the payee may be navigated to the screen **836**, which may be similar to the screen **566** described above in FIG. **19**B, except that the functions provided by the screen **836** relate to the selection of the crediting account rather than the payment account. The screen **836** may include the prompt **838** instructing the payee to select from one of the following crediting account categories represented by the graphical buttons **840**, **842**, **844**, **846**, and **848**. In order to select a compatible account (in this case an iTunes® account) for receiving a payment sent by the payor, the user may select the graphical button **844**, thus advancing the user to the screen **850**. The screen **850** may include a listing of all the iTunes® accounts stored on the payee device **10**. Accordingly, the payee may select the iTunes® account **852** as the crediting account in the present transaction **808**.

[0267] Following the selection of the iTunes® account **852**, the payee may be returned to the screen **674**. As shown in FIG. **19**D, the updated screen **674** may display the iTunes® account **852** as the selected crediting account. Additionally, the graphical button **686** may be replaced on the updated screen **674** with the graphical button **854**. Upon selection of the graphical button **854**, the process of transmitting the transaction information **816** which, as discussed above, may include information pertaining to the selected payment account **830** as well as the selected crediting account **852**, may be transmitted to the iTunes® server **818** for processing

of the payment initiated by the payer in FIGS. **19**A and **19**B. If the transaction fails to complete for one or more reasons, the screen **700** may be displayed on the payee device **10**. The screen **700** may notify the payee the reason or reasons as to why the transaction failed. For instance, in the illustrated embodiment, the notification message **708** may inform the payee that there were insufficient credits in the payor's iTunes® account **830** to satisfy the payment amount **776**. Alternatively, if the transaction is successfully completed, the screen **712** may be displayed on the payee device **10**. The screen **712** may include a notification message **714** notifying the payee that credits from the payor's iTunes® account **830** have been credited to the payee's iTunes® account **852**. The notification message **714** may also inform the payee that a receipt with regard to the completed transaction has been provided to the payor.

[0268] In a further implementation of the present technique, the payment amount could be directly credited to an iTunes® gift card. For instance, an account number associated with a gift card may be maintained by the iTunes® server **818**. Upon receipt and authorization of the transaction information **816**, the iTunes® server **818** may credit the payment amount which, may be in the form of iTune® credits, to the payee's iTune's gift card account. Thus, the payee may use the gift card to add additional gift credits to the payee's iTunes® account and/or redeem credits stored on the gift card for downloadable media content, such as music files, movie files, audio books, podcasts, etc.

[0269] While the above embodiments have been described with regard to the processing of transactions between two electronic devices, such as the payee device **10** and the payor device **92**, additional implementations of the presently described techniques may further include transactions in which the payee device **10** receives payment information from sources other than a portable or non-portable electronic device of the type generally represented by the payor device **92**. For instance, referring now to FIG. **20** a schematic diagram of a transaction **860** in which a payment is made by way of a smart card, illustrated here by reference numeral **862**, to a payee device **10** is illustrated. The smart card **862** may be similar to a conventional credit card, but may further include a storage apparatus, such as a secured storage chip **864**. The storage chip **864** may be configured to store information pertaining to a credit card account or a banking account (e.g., if the smart card **862** is a debit card) represented by the information printed on the smart card **862**. For example, the storage chip **864** may include the account number corresponding to the smart card, the name of the account holder, as well as an expiration date associated with the smart card account, as well as any other relevant information pertaining to the payor's smart card account.

[0270] In the illustrated embodiment, the storage chip **864** may communicate with an external device, such as the payee device **10**, by way of an NFC connection established via magnetic field induction using, for example, an RF signal. As will be understood by those skilled in the art, smart cards may be differentiated from the electronic devices (e.g., payee device **10**, payor device **92**) described above in that although the smart card **862** includes an electronic component, namely the storage chip **864**, the smart card **862** does not include a power source or a processing device that may generally be associated with electronic devices. Instead, the smart card **862** may rely on a built-in inductor to capture an RF signal that may be transmitted from the payee device **10**, such as by way of the NFC device **46**, and thereby use the RF signal to temporarily provide power to the electronic components of storage chip **864** such that the data stored thereon may be transmitted to a receiving device. As will appreciated by those skilled in the art, the transmission of information from a smart card may be in conformance with the NFC techniques discussed above, as well as other known standards, such as ISO/IEC 14443 and ISO 15693, for example.

[0271] As shown in FIG. **20**, the transaction **860** may be initiated by the payment request **384**. In initiating the payment request **384**, the NFC device **46** of the payee device **10** may be powered on, activating the NFC interface **60** and providing an RF signal. Accordingly, an NFC connection **388** may be established by tapping the active payee device **10** to the smart card **862**. The smart card **862**, upon detecting the RF signal being emitted from the payee device **10**, may use a portion of the signal to induce the storage chip **864** to transmit information, such as the smart card information represented by the reference numeral **866**, to the payee device by way of the NFC connection **388** established via the tap operation **386**. In some embodiments, the RF signal may be rectified by the smart card **862**

[0272] The payee device **10**, upon receiving the smart card information **866**, may further require that the account holder, the payor, provide additional verification information, such as providing an amount to be charged to the smart card **862** and, in some embodiments, providing one or more security verification actions. By way of example, one such security verification action may require that the payor provide a card verification valuation (CVV) corresponding to the smart card **862**. The CVV value may be printed on the smart card **862**, but may be either not transmitted from the storage chip **864**, or not stored on the storage chip **864** itself. Thus, as will be understood, these additional security verification procedures may prevent the unauthorized initiation of payment from a smart card **862**.

[0273] In addition to the smart card account information, the payment amount, and the above-described security information (e.g., the CVV code), the payee may select an appropriate crediting account on the payee device **10**, as generally described above. Thereafter, this information, collectively referred to as the transaction information and represented by block **868**, may be transmitted to the one or more financial servers **100**. Specifically, the transaction information **868** may be transmitted to the financial server **380** by way of the network **870**. The financial server **380** may correspond to a financial institution holding or maintaining the crediting account selected by the payee. The network **870** by which the transaction information is transmitted, may include one of any suitable networks described above, such as those provided by the communication interfaces **56** of the payee device **10**.

[0274] Upon receiving the transaction information **868**, the financial server **380** may further transmit the payor's smart card account information, represented here by the block **872**, to the smart card server **874** by way of the network **876**, which again may be provided by any suitable network such as a LAN, a WAN, or a WLAN. The smart card server **874** may be associated with a credit card provider, which maintains the account corresponding to the smart card **862**. The smart card server **874** may perform a one or more verification and/or authorization processes, as represented by the reference numeral **878**, wherein the payor's smart card account **872** is verified for validity and sufficiency of funds, for example.

Accordingly, if the payor's smart card account **872** is determined to be both valid and having the sufficient funds to complete the requested payment **384**, the smart card server **874** may send an authorization message to the financial server **380** by way of the network **876**.

[0275] Upon receiving the authorization message, the financial server **380** may complete the transaction, whereby the payor's smart card account **872** is charged for an amount corresponding to the requested payment **384**, and wherein the payee's selected crediting account is credited for that amount. Once the transaction **860** is successfully processed, a confirmation message **882** may be sent to the payee device **10** from the financial server **380**. Additionally, as also depicted by the reference number **882**, one of the one or more financial servers **100**, such as the financial server **380** or the smart card server **874**, may transmit a receipt to the payor acknowledging that the smart card account **872** has been charged. In one embodiment, one of the one or more financial servers **100** may transmit an electronic receipt to an e-mail associated with the smart card account **872**.

[0276] The processing of a transaction **860** between the payee device **10** and the smart card **862**, when applied to the method **328** depicted by FIG. **11**A, may be further understood with reference to FIG. **21**A. Specifically, FIG. **21**A depicts certain steps of the method **328** in additional detail as applied to the present embodiment. For instance, the step **334** of transmitting an invoice to the payor may include, in the present embodiment, providing a physical or verbal request for a payment, as depicted by step **888**. For instance, the payee and payor may mutually agree upon the terms of the payment before the smart card information **866** is transmitted to the payee device. Once the terms of the payment have been agreed upon, the step of acquiring payment information from the payor may include initiating an NFC connection between the payee device **10** and the smart card **682**, through which the smart card account information **866** stored on the storage chip **864** may be transmitted to the payee device **10**, as indicated by step **890**. For example, this step may correspond to the establishment of the NFC connection **388** by way of the tap operation **386**, as illustrated above in FIG. **20**.

[0277] Once the smart card information **866** has been transmitted from the storage chip **864** of the smart card **862**, it may be received by the payee device **10** using the NFC connection **388**, as indicated by step **892**. Upon receiving the smart card information **866**, a crediting account may be selected on the payee device **10** at step **338**. Thereafter, at decision step **340**, the smart card account information **866** as well as the selected crediting account information, may be transmitted to the one or more financial servers **100** for verification and processing, as depicted by step **894**. The process of verifying the smart card account **872** and the crediting account may include the decision steps **896** and **898**. For example, decision step **896** may include making a determination as to whether the smart card account and the selected crediting account are compatible. As discussed above, in the present context, the term "compatible" refers to whether or not the crediting account is configured to receive a credit card payment from the smart card account. If it is determined at step **896**, that the smart card account the selected crediting account are compatible, then the method **328** may proceed to the decision step **898**, in which it is further determined as to whether the smart card account **872** provided by the payor is valid and has the sufficient funds (e.g., line of credit) to satisfy the requested payment **384**. If it is determined that the smart card account is valid and has sufficient funds, then the transaction may be processed, in which the payee receives the payment at step **346** of the method **328**, thereafter completing the transaction **860** at step **348**.

[0278] Returning to the decision steps **896** and **898**, if it is determined that either accounts are incompatible, or that the smart card account is either invalid or lacks the sufficient funds to fulfill the requested payment, then the method may proceed to decision step **342** in which the payee may determine whether or not to renegotiate the terms of the payment. If the payee does not wish to renegotiate the terms of the payment, then the transaction may be canceled at step **344**. Alternatively, should the payee choose to revise the payment terms, the payee may either acquire information from another smart card belonging to the payor, thus returning the method back to step **892**, or the payee may select an alternate crediting account at step **338**. As will be appreciated, the renegotiation of the payment terms may depend on the outcome of the decisions made at steps **896** and **898**. Further, although not illustrated in FIG. **21**A, the renegotiation of payment terms at step **342** may also include pursuing a transaction in which the payment information is stored on an electronic device, such as the payor device **92** described above in FIGS. **12**A-C, and transmitted to the payee device **10**.

[0279] Continuing now to FIG. **21**B, certain steps of the method **360** are described in further detail from the view point of the payor in accordance with the transaction **860** described above in FIG. **20**. Specifically, FIG. **21**B depicts, in further detail, the step **364** of receiving a payment request from the payee, and the step **366** of providing payment information to the payee. The step **364** of receiving a payment request may include receiving a physical request for a payment, as indicated by step **900**. As discussed above, a physical request may include a mutual agreement between the payee and the payor with regard to the terms of the payment to be made using the smart card **862**. Thereafter, if the payment terms are satisfactory, the payor may accept these terms at step **902**. At step **904**, the payor may position the smart card **862** within range of the payee device, which may include and NFC device **46**. Thus, when the payee device powers on the NFC device **46**, thus entering an active mode, the information stored on the storage chip **864**, which may include the smart card account information **866**, may be transmitted from the smart card **862** to the payee device **10** by way of an NFC connection **388** established via the tap operation **386**. Thereafter, the method **360** may proceed to the decision step **368**, as well as the remaining steps of the method fully depicted in FIG. **11**B.

[0280] Continuing now to FIGS. **22**A-C, a plurality of screen images depicting the operation of the payee device **10** in performing the transaction described in FIG. **20** is illustrated. Referring first to FIG. **22**A, the process of initiating the transaction may begin with the selection the graphical button **114** displayed on the screen **110**. As discussed above, the screen **110** may represent a home screen for the transaction application (e.g., represented by the icon **34** on the home screen **29** of the payee device **10**). By selecting the graphical button **114**, the payee may be advanced to the screen **476**, as described above in FIG. **14**A, which may display the graphical buttons **478**, **480**, and **482**. In order to initiate a payment request, the user may select the graphical button **478**, thus advancing the user to the screen **484**. As discussed above in FIG. **14**A, the screen **484** may display a plurality of graphical buttons, **486**, **488**, and **490**, each representing different techniques and functionalities of the payee device **10** for initiating

the request of a payment. For example, the graphical button **486**, as described above, may represent the function for requesting a payment in accordance with the transactions described above in FIGS. **12**A-C. Here, rather than selecting the graphical button **486**, the payee may select the graphical button **488** in order to indicate that the payment request is to be directed towards a transaction involving at least one smart card **862**.

[0281] Upon selection of the graphical button **488**, the payee may be advanced to the screen **910**. The screen **910** may include a notification message **912** instructing the payee that in order to complete the transaction, the owner of the smart card **862** (e.g., the payor) must perform at least one security verification action, such as the providing of a CVV code, as discussed above. The screen **910** may further display the graphical buttons **914** and **916**. The graphical button **914** may represent a function by which the payment request is initiated by powering on the NFC device **46**. Additionally, the payee also has the option of canceling the payment request by selecting the graphical button **916**. Upon selection of the graphical button **914**, the NFC device **46** of the payee device **10** may be powered on, thus enabling the NFC interface **60**. Accordingly, the screen **910** may be updated to display the notification message **918**, generally informing the user that the NFC interface is currently active and further instructing the user to tap the payee device **10** to the payor's smart card **862**.

[0282] Referring now to FIG. **22**B, the establishment of an NFC connection between the payee device **10** and the smart card **862** by way of the tap operation **386** depicted in FIG. **20**, is illustrated. As discussed above, the powering on of the NFC device **46** may place the payee device into a host or active mode **392**. As the active device **10** is place within an acceptable distance, represented by the distance **514**, from the smart card **862**, which may be in a passive mode **390**, an NFC connection **388** may be established between the payee device **10** and the smart card **862**. Accordingly, by magnetic field induction, the storage chip **864**, which may store the smart card account information, may temporarily be powered to transmit the smart card information to the payee device **10** by way of the established. NFC connection **388**. Returning now to FIG. **22**A, the transmission of the smart card account information **866** from the storage chip **864** may be depicted in the screen **910**, which includes the updated notification message **920**, generally indicating to the payee that the smart card information is being received by the payee device **10**.

[0283] Once the smart card account information **866** has been transmitted to the payee device **10**, the screen **924** may be displayed. The screen **924** may display the smart card account information **866**, including the identity of the account holder **928**, the account number **930**, as well as an expiration date associated with the account **932**, for example. The screen **924** may further display the presently selected crediting account, which may initially display the default crediting account **216**, as described above with reference to FIG. **8**. Additionally, the screen **924** may include the graphical buttons **686**, **688**, and **690**, described above with reference to FIG. **14**J. By selecting the graphical button **686**, the payee may be advanced to the screen **936**, which may represent one or more of the security verification actions required by the payor, as discussed above.

[0284] As illustrated in the screen **936**, the text fields **938**, **940**, and **942** are provided through which the payor may be required to enter the requested data. For instance, the payor may be required to enter the payment amount in the text field **938**. As discussed above, the payment amount may be mutually agreed upon between the payee and the payor at step **888** in FIG. **21**A. The payor may be further required to enter the CVV code on the smart card into the text field **940**. As discussed above, this step may constitute an additional measure of security, thus preventing the unauthorized of initiation of payments from the smart card **862**, such as in instances where the smart card account information **866** stored on the storage chip **864** was obtained without the payor's consent. The payor may further be provided the option of entering an e-mail address into the text field **942**. For instance, the e-mail address may be transmitted to one or more financial servers **100**, and subsequently used to provide the payor with an electronic receipt if the transaction **860** is successfully completed. As displayed on the screen **936**, the payor may enter the above-discussed data into the text fields **938**, **940**, and **942** by way of the text keyboard **160**. Additionally, for fields in which numerical inputs are required, the payor may access the numerical keyboard **164** (not shown in FIG. **22**C) by selecting the graphical button **162**, as discussed above.

[0285] Once the information is entered into the text fields **938**, **940**, and **942**, the payee may initiate the processing of the transaction by selecting the graphical button **944**. Alternatively, the payee may have the option of canceling the transaction by selecting the graphical button **946**. Thereafter, if the transaction fails to be processed successfully for one or more reasons, the screen **700** may be displayed on the payee device **10**. The screen **700** may display a notification message **948** informing the payee as to the reason or reasons as to why the transaction failed. As illustrated in FIG. **22**C, the notification message **948** may indicate that the CVV code provided in the text field **940** of the screen **936** was incorrect and, accordingly, the requested payment could not be authorized. If the transaction is processed successfully, the screen **712** may be displayed on the payee device **10**. As discussed above in FIG. **14**J, the screen **712** may display the notification message **714** generally informing the user that a payment in the amount specified in the text field **938** has been applied to the selected crediting account **216**. The notification message **714** may further inform the payee a receipt has been provided to payor, such as via the e-mail address specified in the text field **942** of the screen **936**.

[0286] Continuing now to FIGS. **23** and **24**, the transactions **952** and **970** are illustrated, respectively, in accordance with a further aspect of the present disclosure. Specifically, the transactions **952** and **970** may represent the functionality provided by the graphical button **490** displayed on the screen **484**, as discussed above with reference to FIG. **14**A. For instance, as will be described in further detail below, the transactions depicted in FIGS. **23** and **24** may rely on the use of the camera **48** on the payee device **10** to acquire an image of a payment instrument, such as a payor's magnetic credit card, or a check.

[0287] Referring now to FIG. **23**, the transaction **952** may be initiated via the acquisition of an image of a payor's credit card **954**. For example, the payment request may originate by agreement between the payee and payor, in which the payor agrees to fulfill the requested payment using the credit card **954**. Accordingly, the payee may power on or activate the camera device **48** on the payee device and acquire an image **956** of the payor's credit card **954**. Upon receiving the image **958**, the payee device **10** may process the image **956**, such as by using an optical character recognition (OCR) technique, as

mentioned above, to extract the credit card account information corresponding to the credit card **954**, as indicated by reference numeral **958**.

[0288] Once the credit card account information corresponding to the credit card **954** has been determined, such as by an imaging application adapted to execute the OCR process, the payee may select an appropriate crediting account. Thereafter, the crediting account information, the extracted credit card account information **958**, as well as additional data, such as the amount of the requested payment, collectively referred to here by reference numeral **960**, may be transmitted to the financial server **380** discussed above by way of the network **416**. As discussed above, the financial server **380** may correspond to the banking provider maintaining the payee's selected crediting account. The financial server **380** may initiate one or more of the authorization actions described above, such as with reference to FIG. **12**A, which may include transmitting the payor's credit card account information, illustrated here by reference numeral **962**, to an external credit card server **382** by way of the network **420**. The credit card server **382** may correspond to a credit card provider that maintains the payor's credit card account **962**. The credit card server **382** may process the credit card account information **962** to determine whether the provided credit card account is a valid account having a sufficient line of credit to fulfill the requested payment, as indicated by the reference numeral **964**.

[0289] If the credit card server **382** determines that a charge in the amount corresponding to the requested payment to the specified credit card account **962** may be authorized, then the credit card server **382** may transmit an authorization message to the financial server **380** by way of the network **420**. Upon receiving the authorization from the credit card server **382**, the financial server may process the transaction **952**, as generally indicated by the reference number **966**. As discussed above, the processing of the transaction **952** may include charging the credit card account **962** for the amount specified in the payment request, and depositing or crediting a corresponding amount to the payee's selected crediting account. Once the transaction **952** has been completed, a confirmation message may be transmitted to the payee device **10** by way of the network **416**. Additionally, if the payor's e-mail address is known or provided, an electronic receipt acknowledging the payment may also be transmitted to the payor.

[0290] The transaction techniques described above with regard to the acquisition of the image **956** representing the payor's credit card **954**, may also be applicable to other types of payment instruments, such as a check corresponding to a checking account held by the payor. For instance, continuing to FIG. **24**, a transaction **970** is illustrated in which payment information in response to a payment request is acquired using the camera device **48** to obtain an image **974** of a check **972** provided by the payor. Once the image **974** is received by the payee device **10**, the check image **974** may be processed, as described above, to extract certain information from the check image **974**, such as the name or identity of the payor, a routing number corresponding to the payor's banking provider, the account number corresponding to the payor's bank account, as well as an identification number corresponding to the payor's check **972**. Once the above-discussed information has been extracted from the check image, **974**, the payee may select an appropriate crediting account for receiving the requested payment. Thereafter, the information extracted from the check image **974**, the selected crediting account, as well as the amount of the requested payment, collectively referred to here by the reference numeral **980**, may be transmitted to the financial server **380** by way of the network **416**, as discussed above.

[0291] The financial server **380** may initiate one or more of the authorization actions discussed above, which may include transmitting the payor's check information, such as the check information extracted during the image processing step **976**, to a check verification service, depicted here by the reference numeral **984**, by way of the network **420**. As will be appreciated, a check verification service may perform one or more of various functions relating to the validation or verification of checks. For example, a check verification service may offer this service to banking providers, vendors, and retailers, by way of a subscription based service, which may be accessed by either using a telephone, or by one or more of the networks generally described above. In some instances, the check verification services described herein may be offered or provided by the banking provider itself. In general, check verification services, such as the check verification service **984**, may perform several functions, which may include verifying a payor's identity, as well as determining whether the payor has a history of providing bounced checks. Based on these records, the check verification service **984**, may determine whether or not the check information **982** provided may be verified and thus authorized to satisfy the requested payment. This verification process is represented here by the reference numeral **986**.

[0292] If the check verification service **984** determines that the requested payment may be carried out using the check information **982**, the check verification service **984** may transmit an authorization message to the financial server **380** by way of the network **420**. Upon receiving the authorization message, the financial server **380** may process the transaction, as indicated by the reference numeral **988**, whereby the bank account corresponding to the payor's check **972**, is debited for the amount of the requested payment, and whereby the debited amount is further credited to the payee's crediting account. Once the transaction has been completed, a confirmation message may be transmitted from the financial server **380** to the payee device **10** by way of the network **416**, as indicated here by the reference numeral **990**. Additionally, if the payor had provided an e-mail address, an electronic receipt may be transmitted to the payor, as described above.

[0293] Various steps of the transactions **952** and **970** depicted in FIGS. **23** and **24**, respectively, may correspond to one or more of the steps described in the method **328** and **360** in FIGS. **11**A and **11**B, respectively. For instance, the acquisition of the image **956** and the image **974** may correspond to the step **336** of acquiring payment information from the payor. Additionally, the acceptance of a payment request and the act of providing either the credit card **954** or the check **972** may correspond to the step **366** of providing payment information to a payee, as depicted in the method **360**. Referring now to FIGS. **25**A and **25**B, the above-emphasized steps **336** and **366**, are depicted in further detail in accordance with the presently illustrated embodiment.

[0294] Referring to FIG. **25**A, the step **334** of transmitting or providing an invoice, which may represent a payment request, to the payor may include the step **888** of providing a physical request for a payment. For example, as discussed above with reference to FIG. **21**A, the step **888** may include a mutual agreement between the payee and payor with regard to the terms of the payment before either the credit card **954** or

the check **972** is provided by the payor for image acquisition. Next, the step **336** of the method **328**, when performed in accordance with the presently illustrated embodiment, may include the steps **994** and **996**. As shown in the present figure, the step **994** may correspond to the step of initiating the camera device **48** for the acquisition of an image.

[0295] Next, at step **996**, an image may be acquired using the initiated camera device **48**, and may reflect an image of either the credit card **958** illustrated in FIG. **23**, the check **972** illustrated in FIG. **24**, or any other type of payment instrument from which payment information may be extracted from an image thereof. Once the image has been acquired at step **776**, payment information may be extracted from the acquired image, as illustrated by the step **998**. Thereafter, the payee may select an appropriate crediting account at step **338** and proceed to the decision step **340** for the authorization of the requested transaction. As shown in the present figure, the decision step **340**, when performed in accordance with the presently illustrated embodiments, may include the steps **694**, **696**, and **698**, as discussed above with reference to FIG. **21**A. Thus, it should be understood that the transaction authorization steps that may be performed with reference to the transactions **952** and **970** may generally be substantially identical to the authorization steps described in the above-discussed embodiments.

[0296] Referring now to FIG. **25**B, the steps **364** and **366** of the method **360**, when performed in accordance with the presently illustrated embodiment from the viewpoint of the payor, are illustrated in further detail. For example the step of receiving a payment request from the payee, as represented by reference numeral **364**, may include the step **900** of receiving a physical request for a payment. As discussed above, the physical request may include a mutual agreement between the payee and the payor with regard to the terms of the payment to be made from either the credit card **954** or the check **972**. Next, the step of providing payment information to the payee, as represented by the reference numeral **366**, may include the steps **902**, **999**, and **1000**. For instance, as discussed above, if the terms of the requested payment are agreed upon, the payor may accept the payment request at step **902**. Thereafter, the payor may select a payment method at step **999**, which may include the credit card **954**, the check **972**, or any other type of suitable payment instrument. Once the desired payment method has been selected, the payor may provide the selected payment method to the payee device **10** for image acquisition by the camera **48**.

[0297] The transactions generally depicted by FIGS. **23** and **24**, may now be explained in further detail with reference to FIGS. **26**A-**26**D and FIGS. **27**A-**27**G, which may illustrate various screen images depicting a technique for operating the payee device **10** in order to carry out the transactions **952** or **970**, as depicted in FIGS. **23** and **24**, respectively. Specifically, the screen images depicted in FIGS. **26**A-**26**D may illustrate the acquisition of an image corresponding to the credit **954** of FIG. **23**, and the subsequent processing of a transaction using the acquired image. FIGS. **27**A-**27**G may generally depict the acquisition of an image corresponding to the check **972** of FIG. **24**, and the subsequent processing of the transaction **970** from the viewpoint of the payee device **10**.

[0298] Referring now to FIG. **26**A, the initiation of the transaction **952** described in FIG. **23** may include navigating through the screens **110**, **476**, and **484**, previously discussed above. For instance, beginning with the screen **110**, the payee may navigate to the screen **476** by selecting the graphical button **114**. Next, the payee may further navigate to the screen **484** by selecting the graphical button **478** from the screen **476**. The screen **484** may include the above-described graphical buttons **486**, **488**, and **490**. As discussed above, each of these graphical buttons may represent various functionalities provided by the device **10** for initiating the request of a payment. For instance, the graphical button **486** may represent a function for initiating a payment request in accordance with the techniques described above with reference to FIGS. **12**A-**12**C. The graphical button **488** may represent the functionality of initiating a payment request in accordance with the transaction techniques described above with reference to FIG. **20**. Here, the payee may initiate a transaction in accordance with the techniques described above with reference to FIGS. **23** and **24** by selecting the graphical button **490**. Upon selection of the graphical button **490**, the payee may be advanced to the screen **1002**, which may provide the payee with one or more options, depicted by the graphical buttons **1004** and **1006**, for acquiring payment information using the above-described image recognition techniques. As shown here, the graphical button **1004** may represent a function by which the payee may acquire an image of a credit or debit card, such as illustrated in the transaction **952**. Additionally, the graphical button **1006** may correspond to the function of acquiring an image of a check, such as the check **972**, and will be described in further detail below with reference to FIGS. **27**A-**27**G.

[0299] Upon selection of the graphical button **1004**, the camera device **48** of the payee device **10** may be powered on and initiated for image acquisition purposes. Additionally, the payee may be advanced to the screen **1008**, which as shown in FIG. **26**A, may function as a viewfinder, represented by the reference numeral **1009**, displaying in real time, images being detected by the camera **48**. The viewfinder **1009** may include the acquisition frames **1010**, which may serve to provide the payee with a means for centering an acquired image. As discussed above, once the terms of a payment request have been agreed upon, the payor may provide a credit card (e.g., **954**) to the payee device **10** for acquisition of an image by the camera device **48**. For instance, as shown in the present figure, the payee may position the payee device **10** such that when viewed by the camera device **48**, the credit card **954** is aligned with the image acquisition frame **1010**. Once the credit card **954** is aligned, the payee may acquire an image of the credit card **1018** by selecting the graphical button **1014**. Additionally, the payee may have the option of canceling the image acquisition process by selecting the graphical button **1016**.

[0300] Once an image of the credit card **952** has been acquired, the screen **1008** may be updated to display the acquired image, referred to here by the reference numeral **1018**. Accordingly, the payee may review the acquired image **1018** to determine whether the quality of the acquired image generally meets the standards required for effective image processing. For example, the payee may determine whether the acquired image **1018** is properly aligned with the acquisition from **1010**, whether the image **1018** is properly focused, or whether the image **1018** was acquired under sufficient lighting conditions. If the payee determines that the acquired image **1018** is suitable for image processing to extract the payment information from the card **954**, the user may initiate the credit card information extraction process by selecting the graphical button **1020**. If the payee determines that the acquired image. **1018** is not of sufficient quality for

image processing, the payee may select the graphical button **1022** to return to the viewfinder **1009** for the acquisition of a subsequent image of the credit card **954**.

[0301] The processing of the credit card image **1018** may be briefly explained with reference now to FIG. **26**B. As discussed above, the processing of images acquired by the camera device **48** of the payee device **10** may utilize one or more optical character recognition techniques for the extraction of text data from the acquired image. Additionally, in some embodiments, the image recognition techniques may further provide for the recognition of certain images or graphics in the resulting acquired image. For instance, such image processing application may provide for the recognition of brand logos or symbols that may identify a corresponding credit card provider or bank provider, for example.

[0302] As shown in FIG. **26**B, an image recognition application, in accordance with the presently described embodiment, may analyze the image **1018** to determine one or more regions of interest. For example, based on the analysis of the image **1018**, the image processing application may identify the regions **1030**, **1032**, **1034**, and **1036**, as being regions of interest that may contain account information pertaining to the credit card **954**. For instance, the region **1030** may correspond to the identity of the credit card provider. The region **1032** may provide for a credit card account number associated with the selected credit card **954**. Further, the region **1034** may correspond to an expiration date associated with the provided credit card **954**, and the region **1036** may correspond to the identity of the payor and/or the holder of the credit card **954**.

[0303] As will be appreciated, the accuracy of image processing and recognition application may generally depend on the quality of the image being processed, such as the image **1018**. As illustrated in FIG. **26**B, the reference numeral **1038** may represent a portion of the image **1018** in the region **1032** that may be distorted or incomplete. For instance, this may be due to artifacts in the resulting image **1018** acquired using the camera device **48**, as described in FIG. **26**A, or may be due to physical damage or defect on the physical credit card **954** itself. For instance, through natural wear, one or more of the numbers or characters printed on the credit card **954** may be partially or entirely obscured or distorted. By way of example, the character represented by the reference numeral **1038**, which may have originally represented the number "8", may appear distorted in the account number region **1032** of the acquired image **1018**. Due to these distortions, the image recognition application may be unable to identify the character **1038** as being the number "8." As will be explained in detail below, the present techniques may provide the payee (or the payor) with the ability to review and correct the extracted payment information prior to submitting the transaction information for authorization and processing.

[0304] Continuing now to FIG. **26**C, once the image processing steps described in FIG. **26**B have been completed, the screen **1042** may be displayed on the payee device **10**. As shown here, the screen **1042** may display the information extracted from the credit card image **1018**. For instance, the screen **1042** may display the identity of the credit card provider **1030**, the credit card account number **1032**, an expiration date associated with the payor's credit card **1034**, and the identity of the payor **1036**, as discussed above. Additionally, the screen **1042** may display the graphical buttons **1044**, **1046**, and **1048**, each of which may correspond to specific functions that may be performed on the device **10**.

[0305] Referring specifically to the credit card account number **1032** extracted from the image **1018**, it should be noted that the presently displayed extracted account number **1032** is not accurate when compared to the actual account number printed on the credit card **952** due to the distorted character **1038**. Accordingly, the payee may edit the displayed extracted credit card information by selecting the graphical button **1044**. Upon selection of the graphical button **1044**, the user may access the screen **1043**, which may display a dropdown selection field **1050**, as well as the text fields **1052**, **1054**, and **1056**. These fields may initially be populated with the corresponding extracted credit card information **1030**, **1032**, **1034**, and **1036** from the previous screen **1042** and may be individually selected and edited by the payee or the payor using the displayed text keyboard **160** or the numerical keyboard **164** if necessary.

[0306] For instance, as shown in the present embodiment, the payee may use the numerical keyboard **164** to edit the credit card account information displayed in the text field **1054** in order to correct for the inaccuracy that may have resulted from the distorted character **1038** that in the acquired credit card image **1018**. Accordingly, if the payee confirms that the edited credit card information is now accurate, the payee may select the graphical button **1058** to return to the screen **1042**, in which the credit card account number **1032** may be updated to reflect the corrections made by the payee on the screen **1043**. Thereafter, the payee may proceed with the transaction process by selecting the graphical button **1046**, thus navigating to the screen **1060** in FIG. **26**D.

[0307] As shown in the screen **1060**, the credit card information extracted from the image **1018** and later edited by the payee, such as described in FIG. **26**C, is displayed and generally designated by the reference number **1062**. Additionally, the screen **1060** may display a crediting account, which in the present embodiment, may be the default crediting account **216**, as discussed above. The screen **1060** may further display the graphical buttons **686**, **688**, and **690**, which may represent the functions previously described with reference to the screen **674** depicted in FIG. **14**J. Accordingly, in order to initiate the process of crediting a payment to the crediting account based on the extracted card information **1062**, the payee may select the graphical button **686** to navigate to the screen **1066**.

[0308] As can be appreciated, the screen **1066** may essentially provide additional security measures that must be addressed prior to transmitting the transaction information, such as to the financial servers **100**. For example, in the illustrated embodiment, the screen **1066** may include the text fields **1068**, **1070**, and **1072**, as well as the graphical buttons **1074** and **1076**. Accordingly, the screen **1066** may require that the payor provide the requested information to the fields **1068**, **1070**, and **1072** prior to initiating the processing of the present transaction. For instance, the field **1068** may be used to enter a payment amount corresponding to the request payment. The field **1070** may require that the payor provide a CVV number corresponding to the credit card **952**. As discussed above, the use of these additional authorization measures may aid to prevent the occurrence of unauthorized charges, such as those that may have been initiated based on the unauthorized acquisition of credit card images.

[0309] Additionally, an e-mail address belonging to the payor may be provided in the text field **1072**. As discussed above, the provided e-mail may be used to transmit a receipt or acknowledgement to the payor once the transaction is

complete. As discussed above, the entry of data into the text fields **1068**, **1070**, and **1072** may be accomplished by way of the text keyboard interface **160**, or the numerical keyboard interface **164** (not shown in FIG. **26**D). Once the information required by the text fields **1068**, **1070**, and **1072** have been entered, the transaction authorization process may be initiated by selecting the graphical button **1074**. Additionally, the payor or payee may have the option of canceling the present transaction by selecting the graphical button **1076**. If the transaction is authorized and successfully processed, the screen **712** may be displayed on the payee device **10**. As discussed above, the screen **712** may display a notification message **714** indicating to the payee the requested payment amount has been deposited to the specified crediting account **216**, and that a receipt has been provided to the payor, such as via the e-mail address provided in the text field **1072** of the screen **1066**.

[0310] Continuing now to FIGS. **27**A-**27**G, one or more techniques for operating the payee device **10** in accordance with the transaction **970** described above with reference to FIG. **24** is explained by way of a plurality of screen images. As shown in FIG. **27**A, the initiation of the camera device **48** for the acquisition of a check image, such as an image corresponding to check **972**, may require that the payee navigate through the above discussed screens **110**, **476**, and **484**. For example, beginning with the screen **110**, the user may select the graphical button **114** to proceed to the screen **476**. There, the user may further navigate to the screen **484**, by selecting the graphical button **478**. From the screen **484**, the user may select the graphical button **490** to navigate to the screen **1002**, as discussed above in FIG. **26**A. Here, rather than selecting the graphical button **1004** to initiate the process for requiring a credit card image, the user may instead select the graphical button **1006** to begin the process for acquiring an image of a check.

[0311] As shown in FIG. **27**A, the selection of the graphical button **1006** may navigate the payee to the screen **1080**. The screen **1080** may display the graphical buttons **1082** and **1084**. Each of these graphical buttons corresponding to a respective technique for processing a check image acquired in accordance with the presently described techniques. Specifically, the graphical button **1082** may represent a function for processing a full check image. As will be understood, in order to initiate the processing of a full check image, an image of an entire check must be first acquired. As will be explained in further detail below, the use of the full check image processing function represented by the graphical button **1082** may be selected in circumstances where the check provided by the payor has the payment amount indicated on the check, and is signed by the payor and made out to the payee. Thus, it may be necessary to process the full check image in order to extract the information relating to the amount of the payment indicated by the payor on the check.

[0312] For example, referring now to FIG. **27**B, upon selection of the graphical button **1082**, the screen **1086** may be displayed on the payee device, and the camera device **48** may be initiated for image acquisition, as discussed above. As shown in screen **1086**, the view finder **1009** associated with the camera device **48** may be displayed. The viewfinder may include the acquisition frame **1010**. Accordingly, the payee may position the payee device **10**, such that the entirety of the check **972** is aligned with the acquisition frame **1010**. Once the check **972** is aligned with the image frame **1010**, the payee may select the graphical button **1090** to acquire an image using the camera **48**. Additionally, the section of the graphical button **1092** on the screen **1086** may allow for the payee to cancel the image acquisition process if necessary.

[0313] Once the image of the check **972** has been acquired, the acquired image, represented here by the reference numeral **1096**, may be displayed on the screen **1086**. As discussed above, the payee may evaluate the acquired image **1086** to determine whether the image is suitable for use by the image processing application, as discussed above. If the payee determines that the acquired image **1096** fails to conform to one or more quality standards required by the image processing application, as discussed above, the payee may select the graphical button **1100** in order to return to the viewfinder **1009** and acquire a subsequent image. If the payee determined that the acquired image **1096** is suitable for processing by the image recognition application, the user may begin the image processing steps by selecting the graphical button **1098**.

[0314] The processing of the check image **1096** may be further explained with reference to FIG. **27**C. As illustrated, the image processing application may process the acquired image **1096** to determine various regions of interest, such as the regions designated by the reference numerals **1104**, **1106**, **1108**, and **1110**. This process may be similar to the process described above with regard to the processing of the credit card image **1018** in FIG. **26**B. Additionally, the image processing application may also designate the region **1112**, which may correspond to a payment amount written on the check **972** by the payor, as a region of interest. As shown in FIG. **27**C, the region **1104** may correspond to the identity of the payor, and the region **1106** may correspond to a routing number that may be used to identify the banking provider associated with the payor's bank account number, which may be represented in the region **1108**. Further, the image processing application may also designate the region **1110** as corresponding to the check number associated with the provided check **972**. Accordingly, as explained above, once the regions are recognized by the image processing application, the information contained within the regions **1104**, **1106**, **1108**, **1110**, and **1112**, may be extracted and displayed on the screen **1116**, as illustrated in FIG. **27**D.

[0315] As shown in the screen **1116**, in addition to the check information extracted from the image **1096**, the screen **1116** may also display the graphical button **1118**, as well as the graphical buttons **1046** and **1048**, which were previously described above with reference to FIG. **26**C. Thereafter, in a manner similar to the editing process described above with reference to FIG. **26**C, the user may select the graphical button **1118** to edit the extracted information from the check image **1096** if any portion of the information is determined to be inaccurate. If the extracted information is determined to be correct, as indicated in FIG. **27**D, the user may select the graphical button **1046** to access the screen **1124**.

[0316] As shown on the screen **1124**, the information extracted from the check image, such as the information represented by the reference numerals **1104**, **1106**, **1108**, **1110**, and **1112**, is displayed and generally designated by the reference numeral **1126**. The screen **1124** may also display the section of a crediting account, which as discussed above, may initially be selected as the payee's default crediting account **216**. Further, the screen **1124** may also display the graphical buttons **686**, **688**, and **690**, as discussed above with reference to the screen **674** in FIG. **14**J. Accordingly, to initiate the transaction authorization steps by which the pay-

ment account represented by the check information **1126** is charged or debited for the payment amount **1112**, the payee may select the graphical button **686**. It should be noted, that in the presently illustrated embodiment, that the security measures depicted above with reference to the screen **1066** of FIG. **26**D, may not be required because the check **972** provided to the payee in the present embodiment has been specifically made out to the payee, thus indicating that the payor had previously acquiesced to the payment request. Thereafter, if the transaction is authorized and successfully processed, such as by the one or more financial servers **100**, the screen **712** may be displayed on the payee device **10**. As discussed above, the screen **712** may include the notification message **714** indicating that the requested payment amount has been credited to the selected crediting account **216**.

[0317] Referring briefly back to FIG. **27**A and, specifically to the screen **1080**, the graphical button **1084** may represent an additional function provided on the payee device **10**, in which the transaction **970** depicted above in FIG. **24**, may be initiated by obtaining only a partial image of a check (e.g., as opposed to a full image). As will be explained in further detail below, the functions provided by the graphical button **1084** may be used in circumstances in which the check provided by the payor is blank, whereby the transaction **970** may only be initiated upon receiving some sort of additional authorization from the payor, such as the providing of a bank account PIN number, for instance.

[0318] Continuing now to FIG. **27**E, upon selecting the graphical button **1084**, the screen **1080** may be updated to display the notification message **1132**, and the graphical buttons **1134** and **1136**. The notification message **1132** may generally inform the payee that the present transaction may further require the providing of a banking account PIN number by the payor. In order to proceed with the acquisition of the partial check image, the payee may select the graphical button **1134**. Additionally, the payee may have the option of canceling the check image acquisition process by selecting the graphical button **1136**. Upon selection of the graphical button **1134**, the user may be navigated to the above discussed screen **1086**, which may include the viewfinder **1009** associated with the camera device **48**. As shown in the screen **1086**, the viewfinder **1009** may include the image acquisition frame **1010**. Thus, the payee may position the device **10** such that the desired portion of the check **972** to be imaged is contained in the region defined by the acquisition frame **1010**. Once the desired portion of the check **972** is properly aligned, the payee may acquire an image of this portion of the check **972** by selecting the graphical button **1090** on the screen **1086**. Additionally, the payee may have the option of canceling the image acquisition step by selecting the graphical button **1092**.

[0319] Upon selection of the graphical button **1090**, an image of the aligned portion of the check **972** may be acquired and displayed on the screen **1086**, as indicated by the reference numeral **1140**. Here, in the manner similar to the screens **1086** described above with reference to FIG. **27**B, the payee may evaluate the image **114** to determine if the quality of the acquired image is sufficient for processing by the image processing application. For example, if the image **1140** fails to meet one or more quality standards discussed above, the payee may select the graphical button **1100** to reacquire a subsequent image of the check **972**. If it is determined that the acquired image **1140** is suitable for processing by the image processing application, the payee may initiate the payment information extraction process by selecting the graphical button **1098**. For example, referring now to FIG. **27**F, the processing of the partial check image **1140** may generally be similar to the processing of the full check image **1096**, as described above with reference to FIG. **27**C, except that the partial check image **1140** does not contain the region **1112** corresponding to the payment amount printed on the check **972** by the payor. Thus, in the present embodiment, the image processing application may process the partial check image **1140** to extract only the identity of the payor **1104**, the routing number corresponding to the payor's banking provider **1106**, the payor's bank account number **1108**, as well as the check number **1110**.

[0320] Once the partial check image **1140** is processed by the image recognition application, the payee may be advanced to the screen **1116** illustrated in FIG. **27**G. As shown in the screen **1116**, the extracted check information, including the payor's identity **1004**, the routing number of the banking provider associated with the selected payment account **1106**, as well as the bank account number **1108** and the check identification number **1110** associated with the provided check **972**, may be displayed. Additionally, the screen **1116** may also provide the graphical button **1118**, which may represent the same functionality described above with reference to FIG. **27**D, as well as the graphical buttons **1046** and **1048**. Thus, if the check image information extracted from the image **1140** is determined by the payee to be accurate, the payee may proceed to the selection of the crediting account by selecting the graphical button **1046**. For instance, the selection of the graphical button **1046** may navigate the payee to the screen **1124**, which may display the extracted check information provided on the previous screen **116**, generally referred to here by the reference numeral **1144**, as well as the section of a crediting account, which may initially be selected as the default crediting account **216**. Additionally, the screen **1124** may further include the graphical buttons **686**, **688**, and **690**, each of which may correspond to the functions described above with reference to screen **674** in FIG. **14**J. Accordingly, to initiate the authorization and processing of the present transaction, in which a payment is credited to the payee's default crediting account **216**, the graphical button **686** may be selected, thereby advancing the payee to the screen **1148**.

[0321] The screen **1148** may be similar to the screen **1066** discussed above in FIG. **26**D, in that one or more additional authorization steps may be completed by the payor before the transaction may be processed. For instance, the illustrated screen **1148** may include the text fields **1150**,**1152**, and **1154**. Using either the keyboard interface **160** or the numerical keyboard interface **164** (not shown in FIG. **27**G), the payor may enter the amount of the requested payment into the text field **1150**, as well as a PIN number associated with the bank account corresponding to the provided check **972** into the text field **1152**. Optionally, if the payor wishes to receive an electronic receipt upon completion of the transaction, such as in the form of an e-mail, the payor may provide a valid e-mail address in the text field **1154**. The screen **1148** may further include the graphical buttons **1156** and **1158**. Accordingly, once the required information is entered into the text fields **1150**, **1152**, and **1154**, the graphical button **1156** may be selected in order to initiate the authorization and processing of the present transaction. Additionally, the transaction may be cancelled at this point by selecting the graphical button **1158**.

[0322] As discussed above, if the transaction is completed successfully, the screen **712** may be displayed on the payee device **10**. The screen **712** may include the notification message **714** notifying the payee that the requested payment has been credited to the selected crediting account **216**, and that a receipt regarding the present payment has been transmitted to the e-mail address provided by the payor in the text field **1154** of the screen **1148**. Alternatively, if the transaction fails for one or more reasons, the screen **700** may be displayed on the payee device instead. In the present figure, the screen **700** may include the notification message **1160**, which may indicate that the pin number provided by the payor in the text field **1152** in the previous screen **1148** does not match the pin number contained within the records maintained by the banking provider. Accordingly, the payee may be instructed to request that the payor either reenter or verify the pin number entered on the screen **148**. It should be understood that the notification message **1160** is meant to illustrate one example of why the present transaction may fail. Indeed, any of the reasons discussed above may contribute to a transaction failing to process successfully (e.g., lack of sufficient funds on payment account, etc.).

[0323] Continuing now to the remaining figures, additional aspects of the presently described techniques are illustrated. As discussed above, the electronic device **10** may include one or more functions adapted to carry out a group transaction involving one or more payors. For example, as discussed above with reference to FIG. **14**A, the graphical button **482** may be selected from the screen **476** to carry out a group transaction. Referring now to FIG. **28**, a schematic representation of the system for performing a group transaction in accordance with one aspect of the present disclosure is illustrated and generally referred to by the reference number **1170**. As illustrated in the present figure, the group transaction **1170** may include a primary transaction, designated by the reference numeral **1172**, as well as one or more secondary transactions, as designated by the reference numeral **1174**.

[0324] In the primary transaction **1172**, the electronic device **10** which may act as the initiating device for the group transaction **1170**, and may assume the role of a payor in making a payment to the vendor device **1176**. Thereafter, the initiating device **10** may act as a payee and receive additional payments from the holders of the payor device **92**, the smart card **862**, and the magnetic credit card **954**. For the purpose of the present discussion, and to more clearly differentiate between the holders of each of these payment instruments, the holder of the magnetic credit card **954** shall be referred to herein as the credit card payor. Similarly, the holder of the smart card **862** shall be referred to herein as the smart card payor, and the holder of the payor device, which may be an NFC enabled device in accordance with the embodiments discussed above, shall be referred to herein as the NFC payor. As will be explained in further detail below, the payments made to the initiator device **10** by the credit card payor, the smart card payor, and the NFC payor, may be in response to a payment owed to the vendor. For example, the presently illustrated transaction **1170** may occur in the context in which one party (e.g., the initiator) initially pays for a group invoice containing amounts owed by each of the illustrated parties, and in which the remaining parties later provide a payment to the initiating party.

[0325] By way of example, the present technique may be utilized in a setting where the parties illustrated in FIG. **28** wish to split a bill or invoice at a restaurant. In the primary transaction **1172**, the initiator device **10** may act as the payor with respect to the vendor device **1176**, which may be a device operated by personnel associated with the restaurant. As discussed above, the initiator device and the vendor device **1176** may establish an NFC connection **1178** by which a group invoice **1180** may be transmitted from the vendor device **1176** to the initiator device **10**. Thereafter, the initiator may select an appropriate payment account on the initiator device, which may be the default payment account **180**, as described above with reference to FIG. **7**. Once selected, the payment account information **1182** may be transmitted to the vendor device **1176** by way of the NFC connection **1178**.

[0326] Upon receiving the payment information **1182**, the vendor device **1176**, which may act as the payee device in the primary transaction **1172**, may select a crediting account and then transmit the crediting account information, the payment account information **1182**, as well as the requested payment amount correspond to the group invoice **1180**, collectively referred to here by the reference number **1184**, to one or more financial servers **100**, as discussed above. As shown in the present figure, the transmission of the transaction information **1184** may occur by way of a network designated by the reference number **1186**. The network **1186** may include any of the suitable networks mentioned above, such as a LAN or a WLAN network connection, for example.

[0327] Once the transaction information **1184** is received, the financial servers **100** may process and authorize the requested transaction and, if the transaction is authorized, a payment **1188** may be provided to the vendor. For example, once the primary transaction **1172** is authorized by the financial servers **100**, the amount requested in the group invoice **1180** may be charged from the payment account **1182** specified by the initiator device **10** and credited to a crediting account specified on the vendor device **1176**. Accordingly, the primary transaction **1172** may be completed at this point, and the initiator device **10** may have the option of proceeding with the secondary transactions **1174**. As discussed above, the secondary transactions **1174** may include transactions involving the NFC device **92**, the smart card **862**, and the magnetic credit card **954**. It should be appreciated, however, that additional devices or payment instruments may also be included in the secondary transaction **1174** in other embodiments, and need not necessarily be limited to the examples provided herein.

[0328] As shown in FIG. **28**, once the primary transaction **1172** has been completed, the initiator device **10** may transmit the current invoice **1192** to the NFC payor device **92** by way of an ad-hoc network, designated by the reference numeral **1194**. Initially, the current invoice **1192** may be identical to the group invoice **1180**. Before requesting the payment from the group transaction members (e.g., the credit card payor, the smart card payor, and the NFC payor), the initiator may apportion the group invoice **1180** in accordance with the amounts owed by each transaction member. As will be illustrated below, the apportioning of the invoice items may be updated in real time and viewed on the current invoice **1192**, which may be displayed on the NFC payor device **92**. Additionally, the current invoice **1192** may also be updated in real time to reflect payments received by the initiator device **10**.

[0329] Once the group invoice **1180** has been apportioned by the initiator on the initiator device **10**, the amounts owed by each of the credit card payor, the smart card payor, and the NFC payor, may be communicated to these parties as a partial invoice. By way of example, the initiator device may begin

the process of receiving payments by establishing an NFC connection **1196** with the NFC payor device **92** to transmit the partial invoice **1198** to the NFC payor. As will be appreciated, the partial invoice **1198** may reflect the portion of the group invoice **1180** owed to the initiator by the NFC payor. Thus, in accordance with the techniques generally described above with respect to the embodiments depict in FIGS. **12**A-**12**C, a payment account may be selected on the NFC payor device **92** and, thereafter, be transmitted to the initiator device **10**, as illustrated by the reference numeral **1200**.

[0330] Upon receiving the payment information **1200** from the NFC payor device **92**, the initiator device **10** may select a crediting account and transmit the payment information **1200**, the crediting account information, as well as the amount reflected in the partial invoice **1198**, collectively referred to here as the transaction request information **1202**, to the financial servers **100** by way of the network **1204**. As will be understood, the network **1204** may be provided by way of one or more of the communication interfaces available on the device **10**, as discussed above. Thereafter, if the financial servers **100** determine that the transaction request represented by the transaction information **1202** may be authorized, then a payment **1206** may be credited to the crediting account selected by the initiator device **10**. Additionally, as discussed above, the payments made by any of the payors in the secondary transaction may be updated in real time on the current invoice **1192** being viewed by the NFC payor. For example, each payment **1206** received by the initiator device may also be reflected on the current invoice **1192**, as indicated by the arrow **1208**.

[0331] Once the initiator device **10** has received the first payment from the NFC payor device **92**, the initiator device **10** may continue to receive the remaining payments from the smart card payor and the credit card payor. For example, in accordance with the techniques described above with reference to the transaction **860** depicted in FIG. **20**, the initiator device may receive the smart card information **1210** corresponding to the smart card **862** by way of the NFC connection **1196** through a tap operation. Additionally, the initiator device **10** may acquire an image **1212** of the magnetic credit card **954** in accordance with the techniques described above with reference to the transaction **952** depicted in FIG. **23**. Accordingly, the initiator device **10** may then transmit the smart card information **1210**, as well as the payment information that may be extracted from the image **1212**, to the financial servers **100** by way of a network **1204** for authorization of these additional secondary transactions. Accordingly, if these transactions are authorized by the financial servers **100**, respective payments,from the credit card payor and the smart card payor, also referenced here by the numeral **1206**, may be credited to a crediting account selected by the initiator device **10**. Additionally, the current invoice **1192** being viewed by the NFC payor **92** may be updated to reflect the processing of these additional payments from the credit card payor and the smart card payor, as indicated by the reference numeral **1208**.

[0332] Continuing now to FIG. **29**, a method **1220**, which may depict a technique for operating the initiator device **10** to carry out the group transaction **1170** discussed in FIG. **28**, is illustrated. As shown in step **1222**, a group transaction may be initiated by the initiator device **10**. Thereafter, at step **1224**, the initiator may receive and pay a group invoice, such as the group invoice **1180**. As discussed above, in accordance with one embodiment, the receipt and payment of the group invoice by the initiator device **10** may occur by way of the NFC connection **1178**. Once the group invoice has been paid by the initiator device **10**, the method **1220** may proceed to step **1226**, whereby the initiator may identify and interface with the additional group transaction members, which may include the credit card payor, the smart card payor, and the NFC payor, as discussed above. Next, the initiator may proceed to apportion the items listed on the group invoice to the appropriate group transaction member. For instance, the initiator may select a first invoice item at step **1228**, and apportion the selected item to the appropriate group transaction member at step **1230**. As shown by the subsequent decision block **1232**, the initiator may continue the apportioning process until all the invoice items listed on the group invoice **1180** have been properly apportioned to the correct group transaction member.

[0333] Thereafter, the initiator may begin the process of collecting payments from each of the group transaction members. For example, the initiator may select a first group transaction member at step **1234**. Next, at step **1236**, a partial invoice corresponding to the selected member from step **1234** may be communicated. For example, the partial invoice may be communicated to the NFC payor device **92** by way of the NFC connection **1196** discussed above. Additionally, the partial invoices may also be communicated verbally, for example, to the credit card payor and the smart card payor. Upon receiving the partial invoice, the respective payor may select a payment account and provide the payment account information to the initiator. For instance, as illustrated by step **1238**, the initiator may collect the payment information from the selected group transaction member and then process the transaction, such as by transmitting the transaction request to the financial servers **100**. As discussed above, if the requested transaction is authorized by the financial servers **100**, a corresponding payment may be made to a crediting account specified by the initiator.

[0334] Thereafter, as shown by the decision step **1240**, the initiator device may continue to collect payments until a payment has been received from each of the group transaction members. Accordingly, once all payments have been received, the group transaction may be completed at step **1242**. It should be noted, that the steps **1222** and **1224** discussed above may correspond to the primary transaction **1172**, and that the remaining steps **1126**-**1242** may correspond to the secondary transaction **1174** as indicated above in FIG. **28**.

[0335] The above-described group transaction **1170** may be better understood with reference to FIGS. **30**A-**30**L, which may generally depict various screen images that may be displayed on either the initiator device **10** or the NFC payor device **92** during the course of the group transaction **1170**. For example, referring first to FIG. **30**A, the primary transaction **1172** may be initiated on the initiator device **10** beginning with the screen **110**. Next, the initiator may select the graphical button **114** to navigate to the screen **476**, which may display the graphical button **482**, as discussed above. Accordingly, the initiator may access the group transaction functions provided by the device **10** by selecting the graphical button **482**, thus advancing to the screen **1270**. The screen **1270** may display the graphical buttons **1272**, **1274**, and **1276**. Each of these graphical buttons may represent specific functions, as discussed above. For instance, the graphical button **1272** may represent a function by which the initiator may initiate the group transaction **1170**. Similarly, the graphical button **1274**

may allow the initiator to join an existing group transaction, such as a group transaction that may have been previously initiated by another member. Additionally, the initiator may cancel the group transaction by selecting the graphical button **1276**.

[0336] As shown in the present figure, the selection of the graphical button **1272** may navigate the initiator to the screen **1278**. The screen **1278** may provide for the selection of various options with respect to the group transaction. For example, a first option may be provided in which the initiator may pay a group invoice, such as the group invoice **1180**, as a primary transaction (e.g., **1172**), and thereafter apportion of the invoice among additional transaction members and collect payments from each of these transaction members as a series of secondary transactions (e.g., **1174**). This may be the scenario generally described by the group transaction **1170** in FIG. **28**.

[0337] As shown in the screen **1278**, an additional group transaction option in which the initiator may directly split an invoice among one or more other transaction members may be provided. This situation will be further explained with reference to FIG. **32** below. The options depicted on the screen **1278** may be represented by the graphical elements **1280** and **1282**, which may represent check box graphic icons, by which the initiator may select the appropriate option. For instance, as illustrated in the present figure, the initiator may select the check box **1280** to indicate that the present transaction is to be performed in accordance with the techniques discussed above in FIG. **28**. Once the option **1280** is selected, the initiator may select a graphical button **1284** in order to begin the group transaction **1170**.

[0338] Upon selection of the graphical button **1284**, the user may be advanced to the screen **1288**, by where the primary transaction discussed above, and referred to the reference numeral **1172**, may begin. For instance, the screen **1288** may represent the initiation of the NFC connection **1178**. The screen **1288** may also include the notification message **1290**, which may indicate to the initiator that the NFC device **46** of the initiator device **10** is being powered on, thus activating the NFC interface **60**, as discussed above. The screen **1288** may also include the graphical button **1292** by which the initiator may select to cancel the establishment of the NFC connection **1178** if necessary.

[0339] Upon establishment of the NFC connection **1178**, the initiator device **10** may receive the group invoice **1180** from the vendor device **1176** with which the NFC connection **1178** has been established. For example, once the group invoice **1180** has been received by the initiator device **10**, the screen **1288** may be updated, as depicted in FIG. **30**B, to display the notification message **1296**. As shown here, the notification message **1296** may inform the initiator that the group invoice **1180** has been received. Accordingly, by way of the graphical buttons **1298** and **1300**, the initiator may either accept or decline the received group invoice **1180**. To accept the group invoice, the initiator may select the graphical button **1298** to navigate to the screen **1304**. The screen **1304** may display the identity of the initiator **1306**, the identity of the vendor **1308**, as well as the amount requested by the group invoice, referred to here by the reference number **1310**. As will be explained below, the amount **1310** may reflect a subtotal prior to the addition of a gratuity amount. For example, the present embodiment may be reflected in a scenario where the vendor is a restaurant and the invoice reflects a restaurant bill. Accordingly, the graphical buttons **1312** and **1314** are also provided on the screen **1304** by which the initiator may choose to specify a gratuity amount, or view the invoice details, respectively.

[0340] The screen **1308** may further display the presently selected payment account, which may be initially selected as the default payment account **180** specified by the initiator, as discussed above in FIG. **7**. Accordingly, the graphical buttons **1318**, **1320**, and **1322** may be provided wherein the graphical button **1318** represents the function by which the initiator may pay the invoice using the presently selected default payment account **180**, wherein the graphical button **1320** represents a function by which the initiator may select an alternate payment account, and wherein the graphical button **1322** may allow the initiator to cancel the present transaction.

[0341] As shown in FIG. **30**B, the initiator may view the group invoice **180** by selecting the graphical button **1314**, thus navigating to the screen **1326**. The screen **1326** may include a section that generally lists all the group invoice items, referred to here by the reference numeral **1330**. Additionally, the scroll bar function **1332** may be provided on the screen **1326** such that the initiator may navigate through the listing of the invoice items **1330** if the listing cannot be viewed in its entirety in the provided display section. In addition to the listing of the invoice items **1330**, the screen **1326** may also list any applicable tax amount **1328**. As will be appreciated, the sum of the invoice items **1330** and the tax amount **1328** may be summed to obtain the subtotal **1310** discussed above. The screen **1326** may additionally display a gratuity amount **1334**, which may initially be zero prior to the addition of a gratuity amount by the initiator. Accordingly, the subtotal for the group invoice **1310** and any gratuity amount **1334** may be summed to determine the total amount of the group invoice **1336**. Further, the graphical buttons **1338** and **1340** may also be provided on the screen **1326**, in which the graphical button **1338** may provide the initiator with the function of proceeding to pay the displayed invoice based on its current status. Additionally, the graphical button **1340** may be selected if the initiator chooses to specify the gratuity amount **1334**.

[0342] For example, if the graphical button **1340** is selected, the initiator may be navigated to the screen **1350** for the addition and selection of a gratuity amount. The screen **1350** may display the current subtotal of the group invoice **1310**, and provide the initiator with the text field **1352** by which the initiator may enter a desired gratuity amount. For instance, the initiator may choose to enter the gratuity amount using the numerical keyboard **164**, or may select a pre-calculated gratuity amount, as provided by the graphical buttons referred to here by the reference numeral **1354**. As shown here, the pre-calculated gratuity amounts represented by the graphical buttons **1354** may correspond to certain percentages of the current subtotal amount **1310**. By way of example, in the present figure, the initiator may select the graphical button which corresponds to a gratuity that is 20% of the current subtotal **1310**. As illustrated here, upon selection of the above-discussed gratuity amount **1334**, the text field **1352** may be populated to reflect the selection. Additionally, the total amount **1336** for the group invoice **1080** may be updated to reflect the addition of the gratuity amount **1334**. For example, the current group invoice total **1336** may be computed by summing the above-discussed subtotal amount **1310** and the presently selected gratuity amount **1334**. Thereafter, the initiator may select the graphical button **1356** to accept the selected gratuity amount and the corresponding updated

group invoice total amount **1336**, or may cancel the present transaction by selecting the graphical button **1358**. As illustrated in the present figure, the selection of the graphical button **1356** may return the user to the screen **1326**, which may be updated to display the selected gratuity amount **1334** and the updated total amount for the group invoice **1336**. If the initiator is satisfied with the current group invoice total amount **1336**, the initiator may select the graphical button **1338** to proceed with the payment of the group invoice amount **1336**.

[0343] Referring to FIG. **30**C, the selection of the graphical button **1338** may return the initiator to the screen **1304**, which may be updated to reflect that the group invoice amount **1336** has been updated to include the addition of the gratuity amount **1334** specified from the screen **1350**. Accordingly, the initiator may initiate the payment of the group invoice total **1336** using the default payment account **180** by selecting the graphical button **1318**. As discussed above, the selection of the graphical button **1318** may transmit the payment account information **1182** to the vendor device **1176** by way of the NFC interface **1178**. Accordingly, the vendor device **1176** may transmit the present transaction request **1184** to the financial servers **100** in order to process and authorize the requested payment.

[0344] As shown in FIG. **30**C, if the primary transaction **1172** is authorized by the financial servers **100**, the screen **1362** may be displayed on the initiator device **10**. The screen **1362** may display the notification message **1364** indicating to the initiator that the group invoice **180** has been paid using the selected default payment account **180**. Additionally, the screen **1362** may include the graphical buttons **1366** and **1368**. The graphical button **1368** may represent the function by which the user may end or cancel the transaction. The graphical button **1366** may allow the user to apportion the group invoice **1180**, and thus initiate the secondary transactions **1174** discussed above with reference to FIG. **28**. As shown in FIG. **30**C, upon selection of the graphical button **1366**, the screen **1370** may be displayed. The screen **1370** illustrates the establishment of an ad-hoc network, such as the network **1194**. As discussed above, capable devices, such as the NFC payor device **92** may join the established ad-hoc network in order to view the current invoice **1192**, as well as updates that may be made to the current invoice **1192** during the various steps performed during in the secondary transactions **1174**.

[0345] The screen **1370** may display the identity of the initiator **1306**, as well as apply an identification name to the present group transaction, as indicated here by the reference numeral **1372**. As shown here, the transaction identifier **1372** may be identical to the recipient **1308** ("ABC Restaurant") of the payment in the primary transaction illustrated by FIGS. **30**A and **30**B. Additionally, the screen **1370** may include the graphical buttons **1376** and **1378**. The graphical button **1378** may allow the initiator to cancel the establishment of the ad-hoc network, for example, if none of the other transaction members, such as the credit card payor and the smart card payor, are using devices capable of connecting to an ad-hoc network. If the group transaction **1170** does include at least one device capable of joining the ad-hoc network, such as the presently illustrated device **92**, the initiator may wait for the device **92** to join the network before selecting the graphical button **1376** to begin the process of apportioning the group invoice **1180**.

[0346] The process of connection to the ad-hoc network **1194** with respect to the viewpoint of the NFC payor device **92** may be illustrated with reference to FIG. **30**D. For example, in order to join the ad-hoc network established by the initiator device **10**, as described in FIG. **30**, the NFC payor may select the graphical button **114** from the screen **110**. It should be noted that the screens depicted in FIG. **30**D may be similar to one or more of the screens discussed above with reference to the initiator device **10**. Thus, it should be understood that the transaction application provided on the initiator device, such as the application **34**, may also be provided on the payor device **92** in the present embodiment. Upon selection of the graphical button **114**, the payor may be advanced to the screen **476**. To access a group transaction function provided on the NFC payor device **92**, the payor may then select the graphical button **482** thus navigating to the screen **1270**. Here, the payor may operate the NFC payor device to join the ad-hoc network discussed above by selecting the graphical button **1274**.

[0347] As shown in FIG. **30**D, the selection of the graphical button **1274** may navigate the NFC payor to the screen **1380**. The screen **1380** may display the identity of the payor **1382**, as well as display a listing of available ad-hoc networks, which may represent ongoing group transactions. For example, the network established by the initiator and described in FIG. **30**C, is listed here and referred to by the reference numeral **1384**. Thus, the payor may select the listed network **1384**, such as by way of the check box selection graphic **1385**, and join the selected network by selecting the graphical button **1386**. Additionally, the NFC payor may also have the option of declining to join the ad-hoc network by selecting the graphical button **1388**. As will be understood, if the latter is selected, the NFC payor may still participate in the group transaction **1170**, but may be unable to view any real time updates to the current invoice.**1192**.

[0348] Once all capable devices have joined the ad-hoc network **1194** established by the initiator device **10**, the apportioning of the group invoice items may begin. For example, referring now to FIG. **30**E, the screen **1370** discussed in FIG. **30**C may be updated to indicate that the NFC payor, represented here by the reference numeral **1382**, has joined the established ad-hoc network. Accordingly, because no other payor devices are participating in the present transaction, the initiator may select the graphical button **1376** to navigate to the screen **1400** to begin apportioning the group invoice items **1330**.

[0349] As illustrated in the screen **1400**, a listing of the group transaction members may be displayed. As shown here, the listing **1402** may initially only include the initiator and the NFC payor, who is presently connected to the initiator device **10** by way of the ad-hoc network **1194**. The screen **1400** may also display a listing of the group invoice items **1330**. As discussed above, a scroll bar function, represented by the graphic **1404**, may be provided on the screen **1400** if the listing of the group invoice items **1330** may not be displayed in its entirety due to screen size limitations. Next, in order to add the remaining transaction members to the present group transaction, the initiator may select the graphical button **1406**. Upon selection of the graphical button **1406**, the initiator may be navigated to the screen **1410** which may display the text field **1412** and the graphical button **1414**, as well as the text keyboard **160**. Thus, the initiator, by way of the text keyboard **160**, may enter the identity of the credit card payor into the text field **1412**. Once the identity of the credit card payor has

been entered, the initiator may add the credit card payor to the present transaction by selecting the graphical button **1414**. As shown in FIG. **30**E, the selection of the graphical button **1414** may cause a pop-up window **1420** to be displayed on the screen **1410**. The pop-up window **1420** may notify the initiator that the credit card payor has been added to the present transaction and may further provide the initiator with the graphical buttons **1422** and **1424**. For example, as illustrated here, the selection of the graphical button **1422** may close the pop-up window **1420** and allow the initiator to re-access the screen **1410** to add an additional member, such as the smart card payor. Thus, the initiator may repeat the steps discussed above and enter the identity of the smart card payor into the text field **1412**. By selecting the graphical button **1414** again, the pop-up window **1426** may be displayed on the screen **1410** notifying the initiator that the smart card payor has also been added to the present transaction **1170**. Accordingly, because all of the group transaction members illustrated in the secondary transaction **1174** of FIG. **28** have now been added, the initiator may return to the screen **1400** by selecting the graphical button **1424**.

[0350] Continuing now to FIG. **30**F, the apportioning of one of the group invoice items **1330** by the initiator is illustrated. As shown in the present figure, the screen **1400** may display an updated listing of the transaction members **1402**, which may include the credit card payor and the smart card payor added using the techniques described in FIG. **30**E. Next, the initiator may apportion the group invoice item **1430** by selecting the location of the item **1430** on the screen **1400**, such as by using a finger or other object, such as a stylus, and, while maintaining contact with the display **24** of the initiator device **10**, move the selected invoice item **1430** to the location on the screen **1400** corresponding to the appropriate transaction member. As will be understood, this operation may commonly be referred to in the context of graphical user interfaces as a "drag and drop" operation. Additionally, as shown on the screen **1400**, the initiator may select the graphical button **1428** if the initiator chooses to split the entire group invoice **1080** equally among the transaction members **1402**. For example, the selection of the graphical button **1428** may divide the group invoice total **1336** equally among the initiator, the NFC payor, the credit card payor, and the smart card payor. Further, while the drag and drop illustration depicted in the present figure represents one implementation that may be provided on a device in accordance with the presently described techniques, it should be understood that any type of suitable interfacing technique for apportioning the group invoice items **1330** may be used in the present transaction.

[0351] Continuing to FIG. **30**G, the screen **1400** may be updated to indicate that the invoice item **1430** has been apportioned to the initiator. As illustrated in the present figure, the apportioning of the group invoice items **1330** may also include the automatic apportioning of the tax and gratuity amount represented here by the reference numerals **1328** and **1334**, respectively, based on the proportional amount of the cost of the apportioned invoice item **1430** compared to the total invoice amount **1336**. It should be appreciated, however, that alternate techniques for apportioning the tax amount **1328** and the gratuity amount **1334**, including alternate schemes for an automatically apportioning these amounts, as well as techniques for manual apportionment of these amounts by the initiator, are also within the scope of the present disclosure. Next, the initiator may continue to apportion the remaining group invoice items **1330**. For example, FIG. **30**G further illustrates the apportioning of the invoice item **1432** to the initiator on the listing **1402**, as well as the subsequent automatic apportionment of any additional tax and gratuity amount in accordance with the techniques discussed above.

[0352] As will be appreciated by those skilled in the art, the need may arise to apportion a particular invoice item amongst two or more of the transaction members **1402**. By way of example, a particular invoice item may have been shared by each of the transaction members **1402**. Accordingly, a shared invoice item may be apportioned by selecting the graphical button **1436**. The selection of the graphical button **1436** may navigate the initiator to the screen **1438**. The screen **1438** may generally display a listing of the group invoice items **1330**, and may also indicate which invoice items **1330** have already been apportioned, such as the invoice items **1430** and **1432**. As will be appreciated, the already-apportioned invoice items **1430** and **1432** may not be selectable on the screen **1438**. As illustrated in the present figure, the initiator may select a shared invoice item **1440** in order to apportion this item amongst multiple group transaction members. For example, upon selecting the invoice item **1440**, the pop-up window **1442** may be displayed on the screen **1438**.

[0353] The pop-up window **1442** may display a listing of the present group transaction members **1402**. As shown here, a check box graphic may be provided with each group transaction member. Accordingly, the initiator may specify how the invoice item **1440** is to be apportioned by selecting the appropriate group transaction members using the check box graphics associated with each respective member. Additionally, as illustrated in the present figure, the initiator may apportion the shared invoice item **1440** equally amongst all the group transaction members **1402** by selecting the check box graphic represented here by the reference number **1444**. Once the appropriate selection is made, the initiator may select the graphical button **1446** to apportion the shared invoice item **1440** in accordance with the selection reflected in the pop-up window **1442**. Additionally, the initiator may cancel this apportionment process by selecting the graphical button **1448**. Upon selection of the graphical button **1446**, the invoice item **1440** may be apportioned equally amongst all of the group transaction members **1402** and the initiator may be returned to the screen **1400**. As shown in the listing of the group invoice items **1330** on the updated screen **1400**, the listing of the invoice item **1440** may be updated to indicate that that this item has already been apportioned, as discussed above.

[0354] Continuing now to FIG. **30**H, after apportioning the shared invoice item **1440**, the initiator may continue to apportion additional invoice items. For example, FIG. **30**H illustrates the apportionment of the invoice items **1452** and **1454** that may correspond to amounts owed by the NFC payor. As illustrated in the present figure, once the invoice items **1452** and **1454** are properly apportioned, their respective listings may be updated on the screen **1400**, as discussed above. As will be appreciated, during the apportioning of the invoice items **1330**, the initiator may select one or more of the group transaction members displayed in the listing **1402** to view the current status of a partial invoice. For example, by selecting the NFC payor, the initiator may view the screen **1456**, which may display a partial invoice corresponding to the amount owed by the NFC payor. As shown here, the screen **1456** may display the NFC payor's portion of the shared invoice item **1440**, as well as the additional invoice items **1452** and **1454**.

Further, as discussed above, based on the total cost of the apportioned invoice items, any applicable tax and gratuity amount may be automatically computed, as indicated here by the reference numeral **1458**. Thus, by summing the above items, tax, and gratuity amounts, a total amount for the partial invoice, referred to here by the reference numeral **1460**, may be displayed. Additionally, the screen **1456** may also provide the graphical button **1462** by which the initiator may remove apportioned items from the present group transaction member, such as items that may have been erroneously apportioned. To continue with the apportioning of the remaining group invoice items **1130**, the initiator may select the graphical button **1464** to return to the screen **1400**.

[0355] Once all of the group invoice items **1330** have been properly apportioned, as depicted in the updated screen **1400**, the initiator may begin the process of collecting payments from each of the group transaction members, as discussed above with reference to the steps **1234-1240** in the method **1220** of FIG. **29**, by selecting the graphical button **1466**. As illustrated in the present figure, the selection of the graphical button **1466** may display the screen **1470** on the initiator device. The screen **1400** may display graphical buttons, such as the graphical buttons **1472**, **1474**, and **1476**, each of which may correspond to a respective one of the group transaction members **1402**. For instance, the graphical button **1472** may correspond to the NFC payor, the graphical button **1474** may correspond to the credit card payor, and the graphical button **1476** may correspond to the smart card payor, as discussed above. As will be understood, the screen **1470** may not include a graphical button corresponding to the initiator, because in paying the group invoice **1180** in the primary transaction. **1172**, the initiator has already satisfied the initiator's respective portion of the group invoice **1080**.

[0356] The collection of payments from each of the remaining group transaction members depicted by the graphical buttons **1472**, **1474**, and **1476**, may be carried out in accordance with one or more of the transaction techniques discussed above. For example, by selecting the graphical button **1472**, the initiator may be advanced to the screen **1480**, which may display a plurality of graphical buttons **1482**, **1484**, **1486**, and **1488**. Each of these graphical buttons may represent different methods in which a payment may be obtained from the corresponding from the group transaction member. For instance, the graphical button **1482** may represent the techniques depicted by the transactions **375**, **376** or **378** in FIGS. **12**A, **12**B, and **12**C, respectively. Additionally, the graphical button **1484** may represent the transaction techniques described above with reference to the transaction **860** described in FIG. **20**. Further, the graphical button **1486** may represent the function described in the transactions **952** and **970** and depicted in FIGS. **23** and **24**, respectively. As shown here, the initiator may also have the option of receiving a cash payment form the corresponding group transaction member by selecting the graphical button **1488**. Although not explained in detail here, the selection of the graphical button **1488** may simply display a confirmation screen by which the initiator may confirm receipt of the payment once a cash payment corresponding to the partial invoice amount has been transferred from the group transaction member to the initiator. Lastly, the graphical button **1490** may allow the initiator to cancel the present transaction or to return to the screen **1470**, if necessary.

[0357] As discussed above, the NFC payor may be in possession of the NFC payor device **92**. Accordingly, the initiator may choose to acquire a payment from the NFC payor by selecting the graphical button **1482** to initiate a payment by establishing an NFC connection (e.g., **1196**) between the NFC interfaces **60** of each respective device **10** and **92** in order to exchange information pertaining to the partial invoice and a corresponding payment account that may be selected by the NFC payor. For instance, as illustrated in the present figure, the selection of the graphical button **1482** may display the screen **1494** on the initiator device **10**. The screen **1494** may display the notification message **1496**, which may generally inform the initiator that the NFC connection **1194** is being established and that a tap operation to the NFC payor device **92** may be required. The screen **1494** may also include the graphical button **1498**, thus allowing the initiator to cancel the establishment of the NFC connection **1196** if necessary.

[0358] Once the partial invoice **1198** and the payment information **1200** have been exchanged between the initiator device **10** and the payor device **92**, as depicted in FIG. **28**, the screen **1500** may be displayed on the initiator device. The screen **1500** may display the identity of the initiator **1502**, the identity of the NFC payor **1504**, as well as the payment amount, which may correspond to the partial invoice amount **1460** depicted on the screen **1456** in FIG. **30**H. The screen **1500** may also display the payment account selected by the NFC payor in accordance with the techniques discussed above, which may be the NFC payor's default payment account **554**, as illustrated in FIG. **14**E. The screen **1500** may also display the presently selected crediting account, which may be the default crediting account **216**. Thus, as discussed above, in order to accept the payment amount **1460** being offered by the NFC payor, the initiator may select the graphical button **686** to credit the requested payment to the default crediting account **216**. Thereafter, if the transaction is successfully completed, the screen **1510** may be displayed on the initiator device. The screen **1510** may include the notification message **1512** which may generally indicate to the initiator that the amount **1460** owed by the NFC payor has been credited to the initiator's crediting account **216**. Additionally, the notification message **1512** may also indicate that an acknowledgment or receipt has been provided to the NFC payor. Thereafter, the initiator may return to the screen **1400** by selecting the graphical button **1514** to collect the remaining payments from the smart card payor and the credit card payor, or cancel or end the transaction by selecting the graphical button **1516**.

[0359] Continuing now to FIG. **30**J, once the payment has been received by the NFC payor, the listing **1402** on the screen **1400** may be updated, as indicated by the reference number **1518**, to indicate that a transaction between the initiator and the NFC payor has been completed. Next, the initiator may continue to collect the remaining outstanding partial invoices from the credit card payor and the smart card payor by selecting the graphical button **1466** again. Upon selection of the graphical button **1466** in FIG. **30**J, the initiator may be navigated to the screen **1470**. As illustrated in the present figure, the screen **1470** may be updated to reflect that the amount owed by the NFC payor has been received by the initiator. For instance, the presently illustrated screen **1470** may be updated wherein the previously displayed graphical button **1472** is removed, and only the remaining graphical buttons **1474** and **1476** are displayed, each of which may represent the outstanding payments owed by the credit card payor and the smart card payor.

[0360] Here, by selecting the graphical button **1476**, the initiator may return to the screen **1480**, as discussed above in FIG. **30**I, by which the initiator may select an appropriate method for receiving a payment from the smart card payor. For example, in the present figure, the initiator may select the graphical button **1484** to initiate the receipt of a payment using the techniques discussed above with reference to FIG. **20**. For example, upon selection of the graphical button **1484**, the screen **1520** may be displayed on the device **10** and display the notification message **1522** indicating to the initiator that the NFC interface on the device **10** is presently active, and that an NFC connection **1196** may be initiated by tapping the smart card **862** and the initiator device **10**, as illustrated in FIG. **28**. Next, once the information stored on the storage chip **864** of the smart card **862** has been received by the initiator device, such as by way of the NFC connection **1196**, the screen **1500** may be displayed. As discussed above, the screen **1500** may display the identity of the initiator, as well as the identity of the smart card payor, referred to here by the reference number **1526**. The screen **1500** may also display a payment amount **1528** that may correspond to the partial invoice owed by the credit card payor. Thus, the initiator may select the graphical button **686** to initiate the transaction authorization actions discussed above, such as transmitting the present information to the financial servers **100**, in order to credit the payment amount **1528** to the crediting account **216**. As shown in the screen **1510**, the notification message **1512** may be displayed if the present transaction is successfully processed, and the smart card **862** is charged for the amount **1528**. Thereafter, in order to complete the group transaction, the initiator may then select the graphical button **1514** to return to the screen **1400** and to collect the final outstanding payment from the credit card payor.

[0361] Continuing now to FIG. **30**K, upon selection of the graphical button **1514**, the screen **1400** may be updated and displayed on the initiator device **10**. As shown in the present figure, the listing **1402** on the updated screen **1400** may indicate that the partial invoice owed by the smart card payor has been received by the initiator, as referred to here by the reference numeral **1532**. Accordingly, to collect the remaining payment owed by the credit card payor, the initiator may select the graphical button **1466** to access the updated screen **1470**. As shown here, the updated screen **1470** may now only display the graphical button **1474**, which reflects the only remaining payment owed to the initiator. By selecting the graphical button **1474**, the initiator may proceed to the screen **1480**, and select the graphical button **1486** in order to obtain a payment from the credit card payor's magnetic credit card **954** using the image processing and information extraction techniques referred to here by the reference number **1540** and generally described above with reference to the transactions **952** and **970**, as depicted by FIGS. **23** and **24**, respectively. For example, the initiator device **10** may acquire an image **1212** of the magnetic credit card **954** using the camera **48** discussed above. Once the image **1212** has been acquired by the initiator device **10**, one or more image processing techniques, such as the OCR techniques mentioned above, may be utilized to extract information from the image **1212** corresponding to the credit card account represented by the credit card **954**.

[0362] Continuing to FIG. **30**L, once the required credit card information has been extracted from the image **1212**, the screen **1060** discussed above with reference to FIG. **26**D may be displayed. Though not illustrated here, it should be understood that the various techniques discussed above for editing the extracted card information for any inaccuracies that may have occurred during the image processing and extraction steps **1540** may also be provided. In order to credit the partial invoice owed by the credit card payor to the crediting account **216**, the initiator may select the graphical button **686**. The selection of the graphical button **686** may navigate the initiator to the screen **1066** which, as discussed above, may represent one or more additional authorization actions that must be performed by the credit card payor before the transaction may be processed. For example, the screen **1066** may require that the credit card payor enter the invoice amount in the text field **1068**, as well as provide a CVV code corresponding to the credit card **954** in the text field **1070**. Additionally, the credit card payor may have the option of providing an e-mail address in the text field **1072**, which may be used to transmit a payment receipt to the credit card payor once the transaction has been completed.

[0363] Once the information required by the field is displayed on screen **1066** has been provided by the credit card payor, the remaining transaction may be processed by selecting the graphical button **1074**. If the transaction is successfully processed, the screen **1510** may be displayed on the initiator device **10**, including the notification message **1512** indicating to the initiator that the final payment owed by the credit card payor has been received and credited to the crediting account **216**. The initiator may then exit the transaction by selecting the graphical button **1516**. Alternatively, if the initiator chooses to return to the invoice screen **1400**, the pop-up window **1542** may be displayed, as illustrated in the present figure. The pop-up window **1542** may indicate to the initiator that all outstanding payments have been received from the group transaction members. The pop-up window may also include the graphical button **1544** by which the user may select to initiate a subsequent group transaction and the graphical button **1546** by which the initiator may accept to exit the completed group transaction, and thus return to the home screen **29** of the device **10**, for example.

[0364] While the determination of each partial invoice in the above-described group transaction is provided by way of the apportioning of specific group invoice items, as illustrated in FIGS. **30**F-**30**H, it should be understood that this technique is merely intended to provide an example of one possible implementation. Indeed, in additional implementations, the transaction application **34** executed on the devices **10** or **92** may allow the initiator or the group transaction members themselves to specify a partial payment amount to satisfy their respective portions of the group invoice.

[0365] Continuing now to FIG. **31**, an alternate implementation of a system configured to conduct the group transaction discussed above with reference to FIG. **28**, is illustrated and generally designated here by the reference number **1560**. The illustrated transaction **1560** may differ from the transaction **1170** discussed above in that the vendor device **1176** may act as the initiating device for the presently illustrated transaction. Additionally, the device **10** in the present transaction **1560** may act as a payor making a payment with regard to a partial invoice to the vendor. As will be appreciated, the presently illustrated transaction may not include the primary transaction step **1172** and the secondary transaction step **1174** discussed in FIG. **28**, but rather may be completed in a single group of transactions in which a payment is received from each of the credit card payor, the smart card payor, the NFC payor associated with the NFC payor device **92**, as well as the

NFC payor associated with the NFC payor device **10**. For the purposes of differentiating between the users of the device **10** and the device **92**, the respective users of these devices shall be referred to as the first NFC payor (corresponding to the NFC payor device **10**) and the second NFC payor (corresponding to the NFC payor device **92**). As discussed above, the vendor device **1176** may establish an ad-hoc network by which all capable devices participating in the present transaction **1560** may join. For example, as illustrated here, the device **10** and the device **92** may join the ad-hoc network **1562** to receive the current invoice **1564**, which may reflect a group invoice collectively representing a total amount owed by each of the presently illustrated transaction members. Also, as discussed above, the first and second NFC payors may view the current invoice **1564**, which may be updated in real time during the course of the transaction **1560**, such as to reflect the apportioning of invoice items to corresponding transaction members, as well as to reflect the receipt of payments by the vendor from the group transaction members.

[0366] Once all the invoice items have been properly apportioned on the vendor device, partial invoices may be communicated to each of the payors participating in the transaction **1560**. For example, a partial invoice corresponding to the amount owed by the first NFC payor, represented here by the reference number **1568**, may be transmitted from the vendor device **1176** to the NFC payor device **10** by way of an established NFC connection **1566**. As discussed above, the establishment of the NFC connection **1566** may require a tap operation between each of the payor device **10** and the vendor device **176**. Upon receiving the partial invoice **1568**, the first NFC payor may select a payment account on the device **10**, and transmit the payment account information, represented here by reference number **1570**, to the vendor device **1176** by way of the NFC connection **166**. As discussed above, the vendor device **1176** may then transmit the transaction information **1572**, which may also include a selected crediting account, to the financial servers **100** by way of the network **1574**, which may be provided by any of the suitable networks discussed above. If the requested transaction **1572** is authorized by the financial servers, a payment, represented by the reference number **1576**, may be credited to the vendor's selected crediting account. Additionally, any payments received by the vendor device during the course of the present transaction **1560**, may be indicated on the current invoice **1564** being viewed by the first and second NFC payors by way of the ad-hoc network **1562**. As will be understood, the current invoice **1562** may be updated to reflect outstanding payments that have already been received.

[0367] Next, the vendor device may further transmit the partial invoice **1582** corresponding to the second NFC payor. For example, as illustrated in the present figure, the partial invoice **1582** may be transmitted to the payor device **92** by way of the NFC connection **166**. Thus, as discussed above, the second NFC payor may select a payment account, represented by the reference number **1584**, and transmit the corresponding information with regard to the selected payment account to the vendor device, which may then further transmit the information **1572** to the financial servers for authorization and processing. Additionally, the vendor device may also receive payment information from the smart card **862**, by way of the NFC network **1566**. For example, as discussed above, using an NFC tap operation, information stored on a storage chip contained within the smart card **862**, represented here by the reference number **1588**, may be transmitted to the vendor device **1176**.

[0368] The vendor device **1176** may also include a camera, such as the camera **48** discussed above, that may be used to obtain an image of the magnetic credit card **954**. Once obtained, the image, referred to here by the reference number **1590**, may be processed using one or more of the techniques discussed above for extracting account information corresponding to the credit card **954**. As will be understood, the payment information received from each of the payors participating in the group transaction **1560** may be transmitted to the financial servers **100** for processing. Thus, if the requested payments are authorized by the financial servers, a corresponding payment, represented here by the reference number **1576**, will be applied to the vendor's selected crediting account, as discussed above.

[0369] Referring now to FIGS. **32**A-**32**D, a series of screen images depicting the operation of the vendor device **1176** in carrying out the transaction **1560** is illustrated in accordance with a further implementation of the presently described techniques. It should be understood that the vendor device **1176** may include a transaction application similar to the transaction application **34** discussed above with reference to the electronic device **10**. For example, as shown in FIG. **32**A, the screen **110** may be displayed on the vendor device **1176**. By selecting the graphical button **114**, the vendor may navigate to the screen **476**, and further select the graphical button **482** to access the graphical buttons **1272**, **1274**, and **1276** on the screen **1270**. Here, the vendor may initiate the group transaction **1560** by selecting the graphical button **1272**, thus advancing to the screen **1278**.

[0370] As discussed above, the screen **1278** may display several options for performing a group transaction. Here, instead of selecting the graphical button **1280**, as discussed above with reference to the transaction **1170** of FIG. **28**, the option represented by the check box **1282** may be selected instead. Once selected, the vendor may further select the graphical button **1284** to proceed with the present transaction **1560**. For instance, the selection of the graphical button **1284** may navigate the vendor to the screen **1594** depicted in FIG. **32**B.

[0371] As discussed above, the present transaction may occur in the context of a restaurant bill in which a listing of tables at the restaurant location, referred to here by the reference numeral **1596**, is displayed. Each of the displayed tables may include an indicator with regard to the status of the members seated at each table. For instance, a table may be indicated as "ready," meaning that the customers have finished the meal and are ready to pay the bill. Additionally, empty tables may be designated as "empty," and tables in which the customers are still eating may be designated as "pending." For example, the table **1598** in the listing **1596** may indicate that the customers are ready to pay the invoice. As illustrated, by selecting the table **1594**, the vendor may navigate to the screen **1600**. The screen **1600** may be similar to the screen **1370** discussed above with reference to FIG. **30**C, in that the presently illustrated screen may establish an ad-hoc network, by which other capable devices, such as the devices **10** and **92**, may join. The screen **1600** may display the identity of the vendor **1602**, as well as an identifier for the present transaction **1604**. Once all capable devices, such as the devices **10** and **92**, have joined the ad-hoc network **1194**, as indicated here by the reference numbers **1608** and **1610**,

the vendor may select the graphical button **1606** to continue to the screen **1614** depicted in FIG. **32**C.

[0372] As shown in the screen **1614**, a listing of the transaction members **1616**, which may initially include the first and second NFC payors, may be displayed. The screen **1614** may also display a listing of the group invoice items **1330**. By selecting the graphical button **1406**, the vendor may perform the functions generally depicted by the screen images in FIG. **30**E to add the credit card payor and the smart card payor to the present transaction, thus updating the listing of group transaction members **1616**. Next, once all the group transaction members have been added to the present transaction, the vendor may proceed with the apportionment of the group invoice items to the corresponding transaction members. For instance, as discussed above, the various invoice items, such as the invoice item **1430**, may be apportioned to the respective group transaction member using a drag/drop operation.

[0373] Continuing now to FIG. **32**D, the vendor may continue to apportion all the remaining group invoice items **1330**, as illustrated in the updated screen **1614** of the present figure. Additionally, it should be noted that the amount owed by each of the group transaction members **1616** may be updated during the apportionment process. As discussed above, once the amounts of each partial invoice have been determined, the vendor may select the graphical button **1466** in order to proceed to the screen **1620**, in which the vendor may initiate the process of collecting the corresponding payments from each of the group transaction members. For instance, the illustrated screen **1620** may display the graphical buttons **1622**, **1624**, **1626**, and **1628**. As discussed above, each of these graphical buttons may correspond to an amount owed by a respective one of the group transaction members **1616**. Thus, in a manner similar to the steps depicted by the screens illustrated in FIGS. **30**I-**30**K, the vendor may collect a payment from each of the group transaction members by selecting one of the graphical buttons **1622**, **1624**, **1626**, and **1628**.

[0374] Upon selection of one of the displayed graphical buttons **1622**, **1624**, **1626**, and **1628**, payment information may be received from the selected group transaction member. Thereafter, a corresponding technique for processing each transaction in accordance with the method by which the payment information is obtained may be carried out, as indicated by the reference number **1630**. For example, as will be understood, the selection of the graphical button **1622** may initiate an NFC payment request, such as by way of the NFC connection **1566** depicted in FIG. **31**, to the first NFC payor on the device **10**. Accordingly, the first NFC payor may provide payment information, as represented by the reference number **1570** in FIG. **31**, to the vendor device **1176** by way of the NFC connection **1566**. As will be understood, the vendor may proceed to collect a payment from each of the group transaction members until all outstanding payments have been received. Additionally, though not illustrated in the present figure, it should be understood that each of group transaction members may have the option of specifying gratuity amounts, if necessary, prior to transmitting the payment information to the vendor device **1176**.

[0375] Once all outstanding payments are received by the vendor, a popup window **1632** may be displayed on the screen **1614**. As shown in FIG. **32**D, the pop-up window may indicate to the vendor that all outstanding payments have been received from the group transaction members **1616**. Additionally, the pop-up window **1632** may display the graphical button **1634** by which the vendor may initiate a subsequent group transaction, and the graphical button **1636** by which the vendor may select to exit the group transaction application. Although the present group transaction techniques have been described in the embodiments illustrated in FIG. **28** and FIG. **31** specifically in the context of apportioning a restaurant bill, it should be understood that the present techniques may be applicable to any group transaction settings in which multiple payors are included.

[0376] As shown in the presently illustrated figures, the various functionalities discussed herein may be provided by way of the transaction application (e.g., represented by the icon **34**) stored on a device incorporating one or more aspects of the present disclosure. Indeed, the transaction application may include encoded instructions stored on one or more machine readable media, such as the storage device **54**, and configured to be executed by the processor **50** to provide for one or more of the functionalities of the device **10** discussed above. Additionally, it should be appreciated that the transaction application may also include encoded instructions defining the various graphical screen images and user interface functions discussed throughout the present disclosure. However, it should also be understood that the functionalities set forth and described in the above figures may be achieved using a wide variety graphical elements and visual schemes, and that the present disclosure is not intended to be limited to the precise user interface conventions depicted above.

[0377] While the present invention may be susceptible to various modifications and alternative forms, specific embodiments have been shown by way of example in the drawings and will be described in detail herein. However, it should be understood that the techniques set forth in the present disclosure are not intended to be limited to the particular forms disclosed. Rather, the invention is to cover all modifications, equivalents and alternatives falling within the spirit and scope of the disclosure as defined by the following appended claims.

What is claimed is:

1. A method for receiving a payment in a peer-to-peer transaction using a handheld electronic device comprising:

acquiring payment information on the handheld electronic device, the payment information comprising at least one payment account selected by a payor;

determining a crediting account for receiving the payment; and

obtaining authorization for the payment.

2. The method of claim **1**, wherein acquiring the payment information comprises receiving the payment information on a communication interface that is configured to establish a communication path with another communication interface on a separate device.

3. The method of claim **2**, wherein the payment information is received in response to an electronic payment request transmitted from the handheld electronic device to the separate device using the communication interface, the electronic payment request including a requested payment amount.

4. The method of claim **3**, wherein the communication interface comprises a near field communication (NFC) interface, wherein the communication path comprises an NFC path, and wherein the NFC path is established using an NFC tap operation performed between the handheld electronic device and the separate device.

5. The method of claim **2**, wherein the selected payment account comprises a smart card, and wherein acquiring the

payment information comprises receiving payment information stored on the smart card using the communication interface.

6. The method of claim **1**, wherein acquiring the payment information comprises acquiring an image of a payment instrument and extracting payment information data from the acquired image.

7. The method of claim **6**, wherein the payment instrument comprises a credit card, and wherein the extracted payment information data comprises at least one of a credit card account number, an expiration date, an identity of a credit card provider, or an identity of a credit card account holder, or any combination thereof.

8. The method of claim **6**, wherein the payment instrument comprises a check, and wherein the extracted payment information data comprises at least one of a bank routing number, a bank account number, a payment amount, an identity of the bank account holder, or a check identifier number, or any combination thereof.

9. The method of claim **1**, wherein determining the crediting account comprises:

displaying a listing of crediting accounts stored on the handheld electronic device in response to a request by a user of the handheld electronic device;

receiving a selection input from the user of the handheld electronic device; and

selecting the crediting account from the listing based on the received selection input.

10. The method of claim **1**, wherein obtaining authorization for the payment comprises transmitting the payment information from the handheld electronic device to at least one external server separate from the handheld electronic device, the at least one external server being configured to authorize the payment based upon the transmitted payment information and to credit the payment to the crediting account if the payment is authorized.

11. The method of claim **10**, wherein the selected payment account comprises a credit card account, and wherein the at least one external server includes a server associated with a credit card provider.

12. The method of claim **10**, wherein the selected payment account is a bank account, and wherein the at least one external server includes a server associated with a banking provider.

13. The method of claim **10**, wherein the selected payment account is a non-cash account.

14. The method of claim **13**, wherein the non-cash account comprises an account associated with an online digital media provider, and wherein the at least one external server includes a server associated with the online digital media provider.

15. A handheld electronic device comprising:

a processor;

at least one communication interface, wherein the at least one communication interface comprises a first communication interface configured to establish a first communication path with a communication interface on a separate device; and

a memory device communicatively coupled to the processor and configured to store at least one payment account, at least one-crediting account, and a transaction application executable by the processor, the transaction application being configured to transmit payment information received by the handheld electronic device to at least one external server to obtain authorization for a payment using the payment information using the second communication interface.

16. The handheld electronic device of claim **15**, the payment information is received using the first communication interface.

17. The handheld electronic device of claim **16**, wherein the first communication interface comprises an NFC interface, and wherein the first communication path comprises an NFC path.

18. The handheld electronic device of claim **15**, wherein upon receiving the payment information, the transaction application is configured to prompt a user of the handheld electronic device for the selection of a crediting account.

19. The handheld electronic device of claim **15**, further comprising a camera configured to acquire an image of a payment instrument, wherein the payment information received by the handheld electronic device is extracted from the acquired image.

20. The handheld electronic device of claim **15**, further comprising a display, wherein display is configured to display the payment information received by the handheld electronic device and a listing of crediting accounts stored on the handheld electronic device.

21. The handheld electronic device of claim **15**, wherein the at least one communication interface comprises a second communication interface configured to establish a communication path with the at least one external server, and wherein the payment information received by the handheld electronic device is transmitted to the at least one external server using the second communication interface.

22. A method for providing a payment in a peer-to-peer transaction using a handheld electronic device comprising:

determining a payment account on the handheld electronic device; and

providing payment information, the payment information including the payment account, to a separate device configured to transmit the payment information to at least one external server configured to authorize a payment made using the payment account.

23. The method of claim **22**, wherein determining the payment account is performed in response to a payment request received from the separate device.

24. The method of claim **23**, wherein the payment request is received on a communication interface configured to establish a communication path with another communication interface on the separate device.

25. The method of claim **24**, wherein providing the payment information to the separate device comprises transmitting the payment information to the separate device using the communication interface.

26. The method of claim **25**, comprising prompting a user of the handheld electronic device to provide an authorization PIN prior to transmitting the payment information to the separate device, wherein the payment information is transmitted to the separate device if the correct authorization PIN is provided by the user of the handheld electronic device.

27. The method of claim **25**, wherein the communication interface comprises an NFC interface, wherein the communication path comprises an NFC path, and wherein the NFC path is established using an NFC tap operation performed between the handheld electronic device and the separate device.

28. The method of claim **22**, wherein the payment account is determined based upon a previous configuration performed by a user of the handheld electronic device.

29. The method of claim **22**, wherein determining the payment account comprises:

displaying a listing of payment accounts stored on the handheld electronic device in response to a request by a user of the handheld electronic device;

receiving a selection input from the user of the handheld electronic device; and

selecting the payment account from the listing based on the received selection input.

30. The method of claim **22**, wherein the payment account comprises a credit card account, a bank account, or a non-cash account.

31. A handheld electronic device comprising:

a processor;

a memory device communicatively coupled to the processor and configured to store at least one payment account and a transaction application executable by the processor, the transaction application being configured to determine a payment account and transmit payment information to a separate device, the payment information comprising at least the determined payment account; and

a communication interface configured to establish a communication path with a communication interface on the separate device, wherein the payment information is transmitted to the separate device using the communication interface.

32. The handheld electronic device of claim **31**, wherein the communication interface comprises an NFC interface, and wherein the communication path comprises an NFC path.

33. The handheld electronic device of claim **31**, further comprising a display, wherein in determining the payment account, the transaction application is configured to display a listing of payment accounts stored on the handheld electronic device on the display and to select the payment account from the listing in response to a selection input received from a user of the handheld electronic device.

34. The handheld electronic device of claim **33**, wherein prior to transmitting the payment information to the separate device, the transaction application is configured to provide a prompt on the display, the prompt requesting a user of the handheld electronic device to authorize the transmission of the payment information by providing an authorization PIN code, and wherein the payment information is transmitted to the separate device if a correct authorization PIN code is provided by the user.

35. The handheld electronic device of claim **31**, wherein the at least one payment account stored in the memory device comprises at least one of a credit card account, a bank account, or a non-cash account, or any combination thereof.

* * * * *