PTO/SB/08b (07-09)
Approved for use through 07/31/2012. OMB 0651-0031
U.S. Patent and Trademark Office; U.S. DEPARTMENT OF COMMERCE
Under the Paperwork Reduction Act of 1995, no persons are required to respond to a collection of information unless it contains a valid OMB control number.

Substitute for form 1449/PTO

INFORMATION DISCLOSURE STATEMENT BY APPLICANT

(Use as many sheets as necessary)

Sheet	1	of	1

Complete if Known	
Application Number	Not Yet Assigned
Filing Date	Currently Herewith
First Named Inventor	Hideki TAKEHARA
Art Unit	Not Yet Assigned
Examiner Name	Not Yet Assigned
Attorney Docket Number	119547-380321

U.S. PATENT DOCUMENTS

Examiner Initials*	Cite No.[1]	Document Number Number-Kind Code[2] (if known)	Publication Date MM-DD-YYYY	Name of Patentee or Applicant of Cited Document	Pages, Columns, Lines, Where Relevant Passages or Relevant Figures Appear

FOREIGN PATENT DOCUMENTS

Examiner Initials*	Cite No.[1]	Foreign Patent Document Country Code[3]-Number[4]-Kind Code[5] (if known)	Publication Date MM-DD-YYYY	Name of Patentee or Applicant of Cited Document	Pages, Columns, Lines, Where Relevant Passages Or Relevant Figures Appear	T[6]
	BA	JP-2005-303925-A	10-27-2005	Sharp Corp		√
	BB	JP-2008-199677-A	08-28-2008	Hitachi Ltd		√

NON PATENT LITERATURE DOCUMENTS

Examiner Initials*	Cite No.[1]	Include name of the author (in CAPITAL LETTERS), title of the article (when appropriate), title of the item (book, magazine, journal, serial, symposium, catalog, etc.), date, page(s), volume-issue number(s), publisher, city and/or country where published.	T[2]

Examiner Signature		Date Considered	

*EXAMINER: Initial if reference considered, whether or not citation is in conformance with MPEP 609. Draw line through citation if not in conformance and not considered. Include copy of this form with next communication to applicant. * CITE NO.: Those application(s) which are marked with an single asterisk (*) next to the Cite No. are not supplied (under 37 CFR 1.98(a)(2)(iii)) because that application was filed after June 30, 2003 or is available in the IFW. [1] Applicant's unique citation designation number (optional). [2] See Kinds Codes of USPTO Patent Documents at www.uspto.gov or MPEP 901.04. [3] Enter Office that issued the document, by the two-letter code (WIPO Standard ST.3). [4] For Japanese patent documents, the indication of the year of the reign of the Emperor must precede the serial number of the patent document. [5] Kind of document by the appropriate symbols as indicated on the document under WIPO Standard ST.16 if possible. [6] Applicant is to place a check mark here if English language Translation is attached.

9302031-v1

VIDEO IMAGE CODING DATA TRANSMITTER, VIDEO IMAGE CODING DATA TRANSMISSION METHOD, VIDEO IMAGE CODING DATA RECEIVER, AND VIDEO IMAGE CODING DATA TRANSMISSION AND RECEPTION SYSTEM

INCORPORATION BY REFERENCE

The disclosure of Japanese Patent Application No. 2014-071975 filed on March 31, 2014 including the specification, drawings and abstract is incorporated herein by reference in its entirety.

BACKGROUND

1. Field of the Invention

[0001] The present invention relates to a video image coding data transmission technology and, more particularly, to a video image coding data transmission technology for transmitting video image coding data in real time.

2. Description of the Related Art

[0002] In recent years, services for compression-coding content such as video images, sounds, and the like and transmitting compression-coded content in real time through a network have been growing with the improvement of the performance of mobile terminals such as smartphones and the like, the extension of a network band due to the

introduction of LTE and the like, and the progress of a video image compression coding technology such as HEVC and the like.

[0003] In a network such as the Internet (IP network), best-effort type transmission is performed, and a band is not guaranteed. Therefore, a transmission rate changes depending on the number of users, the location of use, and the like. Further, in a wireless network, the network can be temporarily disconnected.

[0004] Therefore, TCP, which provides quality assurance such as retransmission control, is used in non-real time data transmission. However, quality assurance involving retransmission control is accompanied with delay and is thus not suitable for real-time data transmission. UDP, which does not provide quality assurance, is used in real-time data transmission. Conventional technologies for transmitting video images in real time are disclosed in, for example, Patent document No. 1 and Patent document No. 2.

[0005] [Patent document No. 1] Japanese Patent Application Publication No. 2005-303925

[Patent document No. 2] Japanese Patent Application Publication No. 2008-199677

[0006] However, a method described in Patent document No. 1 represents a technology where data selected by thinning selection is transmitted in real time and unselected data

that has not been transmitted is then transmitted. Thus, a problem with this is that real-time video image transmission and viewing of high-quality video images cannot be achieved at the same time. Also, in a method described in Patent document No. 2, a single video image is duplicated for highly-compressed video image data and low-compressed video image data and transmitted. Thus, a decrease in transmission efficiency becomes a problem.

SUMMARY

[0007] In this background, a purpose of the present invention is to provide a video image transmission technology capable of achieving real-time video image transmission and viewing of high-quality video images at the same time.

[0008] A video image coding data transmitter according to one embodiment of the present invention includes: a transmission rate acquisition unit that acquires the transmission rate of a network; a transmission structure setting unit that sets a transmission structure including a basic hierarchy and a supplementary hierarchy; a first transmission unit that transmits basic video image coding data of the basic hierarchy; a memory unit that stores supplementary video image coding data of the supplementary hierarchy; a second transmission unit that transmits the

supplementary video image coding data stored in the memory unit; and a transmission control unit that controls the second transmission unit according to the transmission rate.

[0009] Another embodiment of the present invention relates to a video image coding data receiver. The video image coding data receiver includes: a first receiving unit that receives basic video image coding data; a video image decoding unit that decodes the received basic video image coding data so as to reproduce a video image; a second receiving unit that receives supplementary video image coding data including a supplementary hierarchical picture whose coding order and display order are earlier than those of a basic hierarchical picture included in the basic video image coding data; a basic video image coding data acquisition unit that acquires basic video image coding data received before supplementary video image coding data that has been received at the moment; and a video image coding data reconstruction unit that reconstructs video image coding data from the basic video image coding data acquired by the basic video image coding data acquisition unit and the supplementary video image coding data received by the second receiving unit.

[0010] Yet another embodiment of the present invention relates to a video image coding data transmission method. This method includes: acquiring the transmission rate of a network; setting a transmission structure including a basic

hierarchy and a supplementary hierarchy; transmitting basic video image coding data of the basic hierarchy; storing supplementary video image coding data of the supplementary hierarchy; transmitting the stored supplementary video image coding data; and controlling the transmission according to the transmission rate.

[0011] Optional combinations of the aforementioned constituting elements and implementations of the invention in the form of methods, apparatuses, systems, recording mediums, and computer programs may also be practiced as additional modes of the present invention.

BRIEF DESCRIPTION OF THE DRAWINGS

[0012] Embodiments will now be described, by way of example only, with reference to the accompanying drawings that are meant to be exemplary, not limiting, and wherein like elements are numbered alike in several figures, in which:

Fig. 1 is a diagram explaining a video image coding data transmission and reception system according to a first embodiment;

Fig.2 is a flowchart explaining a procedure of coding and transmitting a video image by a monitoring camera shown in Fig. 1;

Fig. 3 is a diagram explaining a procedure of

receiving and decoding video image coding data by a video image monitoring station shown in Fig. 1;

Fig. 4 is a diagram explaining an example of a relationship among the setting of a prediction structure and a transmission structure, basic video image coding data, and supplementary video image coding data;

Fig. 5 is a diagram explaining an example of a transmission instruction in the example shown in Fig. 4;

Fig. 6 is a diagram explaining an example of a relationship among the setting of a prediction structure and a transmission structure, basic video image coding data, and supplementary video image coding data according to a second embodiment; and

Fig. 7 is a diagram explaining a video image coding data transmission and reception system according to a fourth embodiment.

DETAILED DESCRIPTION

[0013] The invention will now be described by reference to the preferred embodiments. This does not intend to limit the scope of the present invention, but to exemplify the invention.

[0014] An explanation will be given hereinafter, along with figures, regarding the details of a video image coding data transmission technology according to a preferred

embodiment of the present invention. In the explanations of the figures, the same elements shall be denoted by the same reference numerals, and duplicative explanations will be omitted.

[0015] [First Embodiment]

Fig. 1 is a diagram explaining a video image coding data transmission and reception system according to a first embodiment. In Fig. 1, three monitoring cameras 1000 are connected to a video image monitoring station 2000 via a network (as an example, the Internet). The monitoring cameras 1000 are each an example of a "video image coding data transmitter," and the video image monitoring station 2000 is an example of a "video image coding data receiver." A video image captured by the monitoring cameras 1000 is monitored by the video image monitoring station 2000 in real time.

[0016] (Configuration of monitoring camera 1000 and configuration of video image monitoring station 2000)

An explanation will be first given regarding the configuration of a monitoring camera 1000. A monitoring camera 1000 is provided with a predictive transmission structure setting unit 100, a video image coding unit 101, a first transmission unit 102, a memory unit 103, a second transmission unit 104, a transmission rate acquisition unit 105, and a transmission control unit 106.

[0017] The transmission rate acquisition unit 105

acquires the transmission rate of a network and provides the acquired transmission rate to the transmission control unit 106 and the predictive transmission structure setting unit 100. The transmission rate acquisition unit 105 may receive information on the transmission rate via the network from a transmission status information generation unit 205 of the video image monitoring station 2000 described later or may estimate the transmission rate of the network.

[0018] The predictive transmission structure setting unit 100 sets the transmission structure of a video image based on the transmission rate provided from the transmission rate acquisition unit 105 and also sets a prediction structure that indicates a reference relationship of each picture of the video image. The transmission structure of the video image includes a basic hierarchy and a supplementary hierarchy. A basic hierarchy is a hierarchy for transmitting an overview video image, and a supplementary hierarchy is a hierarchy for transmitting an extension video image.

[0019] In this embodiment, the predictive transmission structure setting unit 100 sets the ratio of the basic hierarchy and the supplementary hierarchy according to the transmission rate. Alternatively, the predictive transmission structure setting unit 100 may set the ratio of the basic hierarchy and the supplementary hierarchy to

be a default value or a designated value regardless of the transmission rate.

[0020] Based on the transmission structure and the prediction structure set by the predictive transmission structure setting unit 100, the video image coding unit 101 codes a video image that is input from a terminal 1 and generates basic video image coding data that corresponds to the basic hierarchy and supplementary video image coding data that corresponds to the supplementary hierarchy. The video image coding unit 101 provides the basic video image coding data to the first transmission unit 102 and stores the supplementary video image coding data in the memory unit 103.

[0021] The first transmission unit 102 transmits the basic video image coding data provided from the video image coding unit 101 to the video image monitoring station 2000 via the network.

[0022] Based on the transmission rate provided from the transmission rate acquisition unit 105, the transmission control unit 106 controls the transmission of the supplementary video image coding data stored in the memory unit 103. When the transmission control unit 106 issues an instruction for transmitting the supplementary video image coding data based on the transmission rate, the second transmission unit 104 reads out the supplementary video image coding data stored in the memory unit 103 and

transmits the supplementary video image coding data to the video image monitoring station 2000 via the network.

[0023] Note that a supplementary hierarchical picture included in the supplementary video image coding data transmitted by the second transmission unit 104 has a coding order and a display order that precede those of a basic hierarchical picture included in the basic video image coding data transmitted in real time by the first transmission unit 102. In other words, the second transmission unit 104 belatedly transmits supplementary video image coding data of the past when there is a margin in the transmission rate.

[0024] An explanation will be now given regarding the configuration of the video image monitoring station 2000. The video image monitoring station 2000 is provided with a receiving unit 200, a first video image decoding unit 201, a coding data reconstruction unit 202, a coding data storage unit 203, a second video image decoding unit 204, and a transmission status information generation unit 205.

[0025] The receiving unit 200 receives the basic video image coding data transmitted from the first transmission unit 102 and receives the supplementary video image coding data transmitted from the second transmission unit 104. Note that, while the basic video image coding data is basic video image coding data coded and transmitted in real time by the video image coding unit 101 of the monitoring camera

1000, the supplementary video image coding data is belatedly-transmitted video image coding data of the past stored in the memory unit 103 of the monitoring camera 1000. In other words, the supplementary hierarchical picture included in the supplementary video image coding data transmitted from the second transmission unit 104 has a coding order and a display order that precede those of the basic hierarchical picture included in the basic video image coding data transmitted in real time from the first transmission unit 102.

[0026] The transmission status information generation unit 205 obtains the transmission status of the network based on the video image coding data received by the receiving unit 200, generates transmission status information such as a transmission rate, an error incidence rate, and the like, and transmits the transmission status information to the monitoring camera 1000 via the network.

[0027] The receiving unit 200 provides the received basic video image coding data to the first video image decoding unit 201 and stores the received basic video image coding data in a memory of the coding data reconstruction unit 202. The receiving unit 200 provides the received supplementary video image coding data to the coding data reconstruction unit 202.

[0028] The first video image decoding unit 201 decodes the basic video image coding data provided from the

receiving unit 200 and outputs the decoded basic video image coding data to a terminal 2. An overview video image with a low frame rate is output in real time from the terminal 2.

[0029] The coding data reconstruction unit 202 rearranges the order of pictures between the basic video image coding data of the past stored in the memory and the supplementary video image coding data received by the receiving unit 200 so as to reconstruct video image coding data and stores the reconstructed video image coding data in the coding data storage unit 203. Note that, since the supplementary hierarchical picture included in the supplementary video image coding data transmitted from the second transmission unit 104 has a coding order and a display order that precede those of the basic hierarchical picture included in the basic video image coding data transmitted in real time from the first transmission unit 102 as described previously, the video image coding data cannot be reconstructed in combination with the supplementary video image coding data if the basic video image coding data of the past is not stored in the memory. The coding data reconstruction unit 202 deletes the basic video image coding data of the past from the memory after the video image coding data is reconstructed.

[0030] The second video image decoding unit 204 reads out and decodes the reconstructed video image coding data

from the coding data storage unit 203 and outputs the decoded video image coding data to a terminal 3. An extension video image with a high frame rate is output in non-real time from the terminal 3.

[0031] The monitoring camera 1000 and the video image monitoring station 2000 are realized by the cooperation of hardware and software in an information processing device or the like provided with a CPU (Central Processing Unit), a frame memory, a hard disk, and the like. By the operation of the above constituting elements, the monitoring camera 1000 and the video image monitoring station 2000 achieve functional constituting elements explained in the following.

[0032] (Overview of operation of monitoring camera 1000)

An explanation will now be given regarding the overview of the operation of a monitoring camera 1000. Fig.2 is a flowchart explaining a procedure of coding and transmitting a video image by a monitoring camera 1000. An explanation will be given in the following regarding the operation of the monitoring camera 1000 based on Fig. 2.

[0033] The transmission rate acquisition unit 105 acquires the transmission rate of the network from the transmission status information generation unit 205 via the network (S1000). The acquired transmission rate is provided to the predictive transmission structure setting unit 100 and the transmission control unit 106. In this

case, the transmission rate acquisition unit 105 acquires the transmission rate of the network from the transmission status information generation unit 205 via the network. Alternatively, the transmission rate acquisition unit 105 may monitor the network and estimate the transmission rate.

[0034] The predictive transmission structure setting unit 100 sets a prediction structure and a transmission structure based on the transmission rate provided by the transmission rate acquisition unit 105 (S1001). The prediction structure and the transmission structure that are set are provided to the video image coding unit 101. The setting of the prediction structure and the transmission structure is performed for a predetermined number of pictures. An explanation will be given on the condition that the predetermined number is 10. The predetermined number is simply required to be an arbitrary positive integer such as 15, 30, 60, or the like. Loop processing is performed for the predetermined number of times for steps S1002 through S1009. The bit rate of the video image coding data may be set depending on the transmission rate provided by the transmission rate acquisition unit 105.

[0035] The video image coding unit 101 codes a video image that is input from the terminal 1 into video image coding data based on the prediction structure and the transmission structure that are set by the predictive

transmission structure setting unit 100 (S1003). In this case, the video image coding unit 101 codes a video image based on HEVC, which is the international standard. Alternatively, the video image coding unit 101 may code a video image based on MPEG-4AVC/H. 264 (hereinafter, AVC) or the like. The video image coding data is sorted into basic video image coding data and supplementary video image coding data based on the transmission structure. A description will be made later regarding a relationship among the setting of the prediction structure and the transmission structure, the basic video image coding data, and the supplementary video image coding data.

[0036] The video image coding unit 101 checks whether the video image coding data is basic video image coding data (S1004). If the transmission structure of the video image indicates that the video image coding data is basic video image coding data (Y in S1004), the video image coding data is provided to the first transmission unit 102 as basic video image coding data, and the first transmission unit 102 transmits the basic video image coding data provided by the video image coding unit 101 to the network in real time (S1005). At this time, UDP is used as a transport layer of the Internet, and a port number PA is assigned as a port.

[0037] If the transmission structure of the video image indicates that the video image coding data is supplementary

video image coding data (N in S1004), the video image coding data is provided to the memory unit 103 as supplementary video image coding data, and the memory unit 103 stores the supplementary video image coding data provided by the video image coding unit 101 (S1006).

[0038] The memory unit 103 checks whether a transmission instruction provided from the transmission control unit 106 is ON (S1007). If the transmission instruction is ON (Y in S1007), the memory unit 103 provides supplementary video image coding data to the second transmission unit 104 in the order stored if there is supplementary video image coding data that is stored, and the second transmission unit 104 transmits the supplementary video image coding data provided by the memory unit 103 to the network (S1008). Supplementary video image coding data that is transmitted from the network is deleted from the memory unit 103. At this time, UDP is used as the transport layer of the Internet, and a port number PB is assigned as a port. The transmission control unit 106 provides a transmission instruction when there is a margin in a transmission rate provided by the transmission rate acquisition unit 105. A description will be made later regarding conditions and the details of the transmission instruction when there is a margin in the transmission rate. If the transmission instruction is not ON (N in S1007), the step proceeds to the step S1009 without the transmission of the

supplementary video image coding data.

[0039] In order to match the transmission of the supplementary video image coding data to the network with the timing of the setting of the transmission rate, the steps S1007 and S1008 may be performed after the step S1009.

[0040] The operation explained above is repeatedly performed during a predetermined transmission rate period. Therefore, changes in the transmission rate can be addressed for each predetermined transmission rate period.

[0041] (Overview of operation of video image monitoring station 2000)

An explanation will now be given regarding the overview of the operation of a video image monitoring station 2000. Fig. 3 is a diagram explaining a procedure of receiving and decoding video image coding data by a video image monitoring station 2000. An explanation will be given in the following regarding the operation of the video image monitoring station 2000 based on Fig. 3.

[0042] If video image coding data the receiving unit 200 receives from the network is basic video image coding data that is received at a port PA (Y in S1100), the receiving unit 200 provides the basic video image coding data to the first video image decoding unit 201 and the coding data reconstruction unit 202. The first video image decoding unit 201 decodes the basic video image coding data provided from the receiving unit 200 so as to generate a

reproduction video image and outputs the reproduction video image from the terminal 2 (S1101). Meanwhile, the coding data reconstruction unit 202 stores the basic video image coding data provided from the receiving unit 200 in a memory inside the coding data reconstruction unit 202 (S1102). Alternatively, the coding data reconstruction unit 202 may store the basic video image coding data in an external memory. In short, the coding data reconstruction unit 202 is simply required to be able to acquire basic video image coding data received before supplementary video image coding data that has been received at the moment. The step then proceeds to step S1106. Details of the step S1106 will be described later.

[0043] If the video image coding data the receiving unit 200 receives from the network is not basic video image coding data that is input at the port PA (N in S1100) and there is supplementary video image coding data that is received at a port PB (Y in S1103), the receiving unit 200 provides the supplementary video image coding data to the coding data reconstruction unit 202. The coding data reconstruction unit 202 reconstructs video image coding data by rearranging the basic video image coding data stored in the memory in the step S1102 and the supplementary video image coding data received in the step S1103 (S1104). The reconstructed video image coding data is provided to the coding data storage unit 203.

Subsequently, the coding data reconstruction unit 202 deletes the basic video image coding data stored in the memory from the memory inside the coding data reconstruction unit 202 (S1105). The step then proceeds to the step S1106. Details of the step S1106 will be described later.

[0044] If the video image coding data the receiving unit 200 receives from the network is not the basic video image coding data that is input at the port PA (N in S1100) and there is no supplementary video image coding data that is received at a port PB (N in S1103), the step proceeds to the step S1106.

[0045] In this case, the rearrangement of the basic video image coding data and the supplementary video image coding data is performed based on a frame number showing the coding order of pictures that is defined in AVC. Alternatively, a sequence number may be coded in an area different from that of the video image coding data such as a UDP extended area. Also, the reconstructed video image coding data may be packetized in a fixed-length size just like an MPEG-2 transport stream, multiplexed with sound data or the like, and stored as a media stream. Alternatively, the reconstructed video image coding data may be packetized in units of access units just like an MP4 file, multiplexed with sound data or the like, and stored as a media stream. Further, while storing the basic video

image coding data and the supplementary video image coding data in the order received without rearranging the basic video image coding data and the supplementary video image coding data, a picture reproduction order list based on the frame number showing the coding order of pictures can also be generated and stored. In this case, reproduction based on the picture reproduction order list allows the video image coding data to be properly reproduced without any rearrangement.

[0046] The transmission status information generation unit 205 analyzes the status of receiving the basic video image coding data and the supplementary video image coding data of the receiving unit 200 and estimates the transmission rate of the network (S1106). It is assumed that the method of estimating the transmission rate is a general method where estimation is performed by measuring round trip time. The estimated transmission rate is provided to the transmission rate acquisition unit 105 of the monitoring camera 1000. The estimated transmission rate is assumed to be coded in a UDP extended area.

[0047] A bitstream stored in the coding data storage unit 203 is provided to the second video image decoding unit 204 as necessary and decoded by the second video image decoding unit 204 so as to generate a reproduction video image, and the reproduction video image is output from the terminal 3.

[0048] As described, a reproduction video image with a high frame rate is output in non-real time from the terminal 3 while a reproduction video image with a low frame rate is output in real time from the terminal 2.

[0049] (Event basis operation of video image monitoring station 2000)

An explanation will be now given regarding an event basis operation of the video image monitoring station 2000. An event basis operation is performed by the operation by a user. For example, the event basis operation is used when the user wishes to see a video image with a higher frame rate. In this case, the second video image decoding unit 204 decodes the video image coding data provided from the coding data reconstruction unit 202 so as to generate a reproduction video image and outputs the reproduced video image from the terminal 3. The video image coding data output from the coding data storage unit 203 may be stored in a file or the like at this time.

[0050] (Setting of prediction structure and transmission structure, basic video image coding data, and supplementary video image coding data)

Next, in reference to Fig. 4, an explanation will be given regarding an example of a relationship among the setting of a prediction structure and a transmission structure, basic video image coding data, and supplementary video image coding data.

[0051] A transmission rate period is a period when a transmission rate acquired by the transmission rate acquisition unit 105 is effective. It is assumed that the transmission rate that has once acquired does not change during the transmission rate period. One transmission rate period is set to include ten pictures. There are four transmission rate periods: T1, T2, T3, and T4, and respective transmission rates of the transmission rates periods are R1, R2, R3, and R4. In an example shown in Fig. 4, R1 is 4 Mbps, R2 is 2 Mbps, R3 is 800 kbps, and R4 is 6 Mbps.

[0052] In order to facilitate the explanation, an explanation will be given herein on the assumption that a transmission rate period is the same as a period during which a prediction structure and a transmission structure are set (in which the number of pictures for which the same prediction and transmission structures are applied). However, since a transmission rate period and a period for setting prediction and transmission structures are independent concepts, these periods may be set separately.

[0053] A picture number is assigned to each picture that constitutes a video image that is input from the terminal 1. Picture types include an I picture for performing intra coding, a P picture for performing inter prediction coding, and a B picture for performing inter prediction coding in a bidirectional manner. In order to simplify the explanation,

an I picture and a P picture are used herein for the explanation. However, instead of a P picture, a B picture may be used as a picture type.

[0054] There are two types of transmission structures: a basic hierarchical picture (A) and a supplementary hierarchical picture (B). A basic hierarchical picture is provided to the first transmission unit 102 as basic video image coding data, and a supplementary hierarchical picture is provided to the memory unit 103 as supplementary video image coding data. A reference picture is a picture used for inter prediction, and a reference relationship among pictures is referred to as a prediction structure. The maximum number of reference pictures is set to be two in this case.

[0055] All pictures are coded as basic hierarchical pictures in the transmission rate period T1 and the transmission rate period T4. Pictures are coded alternately as basic hierarchical pictures and as supplementary hierarchical pictures in the transmission rate period T2. Pictures are coded alternately as basic hierarchical pictures and as supplementary hierarchical pictures in the ratio of 1:2 or 1:3, respectively, in the transmission rate period T3. The ratio of basic hierarchical pictures and supplementary hierarchical pictures has been explained to be up to 1:3 thus far. However, the ratio of basic hierarchical pictures and

supplementary hierarchical pictures can be set to be 1:30, 2:1, etc.

[0056] As described, the proportion of basic hierarchies to supplementary hierarchies can be changed in accordance with the transmission rate. When the transmission rate is sufficiently high (there is a margin), all basic hierarchies in the transmission rate are coded as basic hierarchical pictures. As the transmission rate becomes lowered (there is less margin), supplementary hierarchical pictures are increased, and the ratio of basic hierarchical pictures is reduced.

[0057] A basic hierarchical picture refers to two immediately preceding basic hierarchical pictures at this time. Also, a supplementary hierarchical picture refers to two immediately preceding basic hierarchical pictures and/or supplementary hierarchical pictures. As described, limiting basic hierarchical pictures to refer to only basic hierarchical pictures allows for decoding in the presence of only basic video image coding data. Meanwhile, allowing supplementary hierarchical pictures to refer to both basic hierarchical pictures and supplementary hierarchical pictures increases the coding efficiency.

[0058] As an example for setting a transmission structure according to a transmission rate, all pictures are coded as basic hierarchical pictures when the transmission rate is 4 Mbps or higher, basic hierarchical

pictures and supplementary hierarchical pictures are alternately coded when the transmission rate is 1 Mbps or higher and less than 4 Mbps, and basic hierarchical pictures and supplementary hierarchical pictures are coded at a proportion of 1:2 or 1:3 when the transmission rate is less than 1 Mbps. A minimum transmission rate at which all pictures are coded as basic hierarchical pictures is referred to as a reference transmission rate. In the example, 4 Mbps is the reference transmission rate. A case where there is a margin in the transmission rate means a case where the transmission rate is larger than the reference transmission rate.

[0059] As described above, by acquiring a transmission rate for a predetermined transmission rate period and by setting the proportion of basic hierarchical pictures to supplementary hierarchical pictures such that the ratio of the basic hierarchical pictures is increased as the transmission rate becomes larger and the ratio of the supplementary hierarchical pictures is increased as the transmission rate becomes smaller, the basic hierarchical pictures can be transmitted in real time even when the transmission rate is small.

[0060] Further, by transmitting supplementary hierarchical pictures along with basic hierarchical pictures during a transmission rate period in which there is a margin in a transmission rate and by reconstructing

video image coding data from the basic hierarchical pictures and the supplementary hierarchical pictures on the receiving side, the viewing of a video image at a low frame rate can be achieved in real time before the supplementary hierarchical pictures are received, and the viewing of a video image at a high frame rate can be achieved after the supplementary hierarchical pictures are received. Since no duplicate picture is transmitted in the basic hierarchical pictures and the supplementary hierarchical pictures, the transmission efficiency is not lowered.

[0061] In the above, basic hierarchical coding data and supplementary hierarchical coding data are transmitted by different ports of UDP. However, as long as the basic hierarchical coding data and the supplementary hierarchical coding data can be distinguished from each other in the video image monitoring station 2000, the method is not limited to this. For example, the basic hierarchical coding data and the supplementary hierarchical coding data may be respectively assigned with different identifiers, multiplexed in a MP4 file or MPEG-2TS, and transmitted by a single port. In this case, the identifiers may be provided in the video image coding data or may be provided at the time of multiplexing.

[0062] In the above, a transmission rate period and/or a period for setting prediction and transmission structures are explained as fixed periods. However, these periods may

be variable periods. For example, when the transmission rate is smaller than a predetermined threshold value or when the number of supplementary hierarchical pictures stored in the memory unit 103 is larger than the predetermined threshold value, the transmission rate period and/or the period for setting the prediction and transmission structures may be controlled to be shorter. When the transmission rate is smaller than the predetermined threshold value and the number of the supplementary hierarchical pictures stored in the memory unit 103 is larger than the predetermined threshold value, the transmission rate period and/or the period for setting the prediction and transmission structures may be controlled to be shorter.

[0063] When the transmission rate is large enough, the transmission rate period and/or the period for setting the prediction and transmission structures may be set to be long, and coding may be continued for a while on the assumption that the transmission rate will not change for a while. However, when the transmission rate is small, it is desired, considering the possibility of a change in the transmission rate, to set the transmission rate period and/or the period for setting the prediction and transmission structures to be short, to acquire the latest transmission rate, and to update the transmission structure frequently. When the number of supplementary hierarchical

pictures stored in the memory unit 103 is large, buffer overflow is more likely to occur. Thus, it is desired to set the transmission rate period and/or the period for setting the prediction and transmission structures to be short, to acquire the latest transmission rate, and to change the transmission structure. By setting the transmission rate period and/or the period for setting the prediction and transmission structures to be variable periods as described above, the transmission of the supplementary hierarchical pictures can be properly performed while appropriately updating the transmission rate or appropriately changing the transmission structure.

[0064] Also, a simpler structure can be employed where basic hierarchical pictures and supplementary hierarchical pictures are set to be I pictures and P pictures, respectively, and an interval between I pictures can be adjusted in accordance with the transmission rate for the purpose of improving the quality of a video image. For example, an interval between I pictures is controlled such that the interval between I pictures is set to be shorter as the transmission rate becomes higher and that the interval between I pictures is set to be longer as the transmission rate becomes lower. In this manner, basic hierarchical pictures can be transmitted in real time even when a transmission rate is small with a simpler structure, and supplementary hierarchical pictures can be also

transmitted in a transmission rate period where there is a margin in a transmission rate.

[0065] (Example of transmission instruction)

An explanation will now be given of an example of a transmission instruction with reference to Fig. 5. An explanation will be given herein regarding the example of the transmission instruction using, as an example, the relationship among the setting of a prediction structure and a transmission structure, basic video image coding data, and supplementary video image coding data shown in Fig. 4. The same as in Fig. 4 applies to a picture number, a picture type, and a transmission structure. "Port PA transmission" indicates basic hierarchical pictures transmitted from the port PA, and "Port PB transmission" indicates supplementary hierarchical pictures transmitted from the port PB. Picture number' indicates respective picture numbers of the supplementary hierarchical pictures transmitted from the port PB. In the same way as in Fig. 4, R1 is 4 Mbps, R2 is 2 Mbps, R3 is 800 kbps, and R4 is 6 Mbps for transmission rates.

[0066] The basic hierarchical pictures are transmitted in real time from the port PA. When there is a margin in the transmission rate (in a case where the transmission rate is R4), the supplementary hierarchical pictures are transmitted from the port PB in the order stored without exceeding the transmission rate. Fig. 5 shows a state

where pictures 11, 13, 15, 17, 19, and 21 out of pictures 11, 13, 15, 17, 19, 21, 22, 24, 25, 27, 28, and 29, which are the supplementary hierarchical pictures stored in the memory unit 103, are being transmitted in a transmission rate period T4. As described, supplementary hierarchical pictures having coding order and display order that are earlier than those of basic hierarchical pictures transmitted in a given transmission interval are transmitted.

[0067] The coding data reconstruction unit 202 rearranges the order of basic hierarchical pictures of the past stored in the memory and the supplementary hierarchical pictures received in the transmission rate period T4 and performs reconstruction.

[0068] This allows, after supplementary hierarchical pictures are received, video image coding data to be reconstructed from basic hierarchical pictures stored in the memory and the received supplementary hierarchical pictures and a video image consisting of all pictures to be viewed, while viewing basic hierarchical pictures in real time.

[0069] For example, in a crime prevention system, it is effective to use a video image with a high frame rate as an evidence video image including a decisive moment after an event while monitoring a video image with a low frame rate in real time. In mobile communication where a plurality of

transmission paths are available such as 3G/LTE, WiFi, and the like, by reducing a transmission quantity by transmitting only basic hierarchical pictures in a 3G/LTE area having a band limitation and transmitting supplementary hierarchical pictures in a WiFi area having no band limitation, an overview video image can be reproduced even in an environment with a band limitation, and a video image with a high frame rate can be reproduced in an environment with no band limitation.

[0070] [Exemplary variation of first embodiment]

An explanation will be given in the following regarding differences in an exemplary variation of the first embodiment from the first embodiment. The exemplary variation is different from the first embodiment in the setting of a transmission structure. In the first embodiment, basic video image coding data and supplementary video image coding data are set in units of pictures. In the exemplary variation, basic video image coding data (basic hierarchical GOP) and supplementary video image coding data (supplementary hierarchical GOP) are set in units of GOPs.

[0071] Regarding the basic hierarchical GOP, the basic hierarchical GOP is set to be an open GOP if the immediately preceding GOP is a basic hierarchical GOP, and the basic hierarchical GOP is set to be a closed GOP if the immediately preceding GOP is a supplementary hierarchical

GOP. In a closed GOP, coding and decoding can be performed with reference to pictures in the GOP. On the other hand, a supplementary hierarchical GOP is always set to be an open GOP. As described, setting a basic hierarchical GOP to be an open GOP only when the immediately preceding GOP is a basic hierarchical GOP allows for decoding in the presence of only a basic hierarchical GOP. Meanwhile, allowing a supplementary hierarchical GOP to be always set to be an open GOP increases the coding efficiency.

[0072] By employing a GOP, which is a unit that is larger than a picture, for the setting of a transmission structure, a clock that synthesizes basic video image coding data and supplementary video image coding data of the coding data reconstruction unit 202 in the video image monitoring station 2000 can be reduced. Obviously, a transmission structure can be also set in units of a plurality of GOPs.

[0073] [Second embodiment]

An explanation will be given in the following regarding a second embodiment. An explanation will be given mainly of differences from the first embodiment. Fig. 6 is a diagram explaining an example of a relationship among the setting of a prediction structure and a transmission structure, basic video image coding data, and supplementary video image coding data according to a second embodiment. As shown in Fig. 6, the second embodiment is

different from the first embodiment in that a transmission structure is divided in a picture in the second embodiment.

[0074] There are two types of transmission structures: a basic hierarchy area (A) and a supplementary hierarchy area (B). A basic hierarchy area is coded into basic video image coding data and provided to the first transmission unit 102, and a supplementary hierarchy area is coded into supplementary video image coding data and provided to the memory unit 103.

[0075] An explanation will be first given regarding the monitoring camera 1000. The predictive transmission structure setting unit 100 sets a prediction structure and a transmission structure based on the transmission rate provided by the transmission rate acquisition unit 105 (S1001). An explanation will now be given regarding the setting of a transmission structure according to the second embodiment. A picture is divided in quarters in each of horizontal and vertical directions, forming 16 divided areas. A basic hierarchy area and a supplementary hierarchy area are set for each of the divided areas.

[0076] All divided areas are set to be basic hierarchy areas in a transmission rate period T1 (transmission rate R1) and a transmission rate period T4 (transmission rate R4). In a transmission rate period T2 (transmission rate R2), divided areas in the second and third lines are set to be basic hierarchy areas, and divided areas in the first

and fourth lines are set to be supplementary hierarchy areas. In a transmission rate period T3 (transmission rate R3), four divided areas in the center of the picture are set to be basic hierarchy areas, and divided areas other than the basic hierarchy areas are set to be supplementary hierarchy areas.

[0077] The video image coding unit 101 divides into areas a video image that is input from the terminal 1 based on a transmission structure that is set and codes divided areas into basic hierarchical coding data or supplementary hierarchical coding data in units of tiles (may be slices) (S1003).

[0078] A basic hierarchy area refers to respective basic hierarchy areas of two immediately preceding pictures at this time. A supplementary hierarchy area refers to respective basic hierarchy areas and supplementary hierarchy areas of the two immediately preceding pictures. By determining a reference relationship as described, an accurate video image can be decoded for a basic hierarchy area from basic hierarchy areas only without depending on supplementary hierarchy areas.

[0079] In the above, basic hierarchy areas and supplementary hierarchy areas are set as shown in Fig. 6. However, as long as these areas can be set such that the basic hierarchy areas become larger (the number of areas divided as basic hierarchy areas becomes larger) as a

transmission rate becomes larger and that the basic hierarchy areas become smaller (the number of areas divided as basic hierarchy areas becomes smaller) as the transmission rate becomes smaller, the way of setting the areas is not limited to this. For example, by enlarging a feature area as the transmission rate becomes larger in combination with a feature area extraction process, the feature area can be adaptively transmitted in accordance with the transmission rate.

[0080] An explanation will be now given regarding the video image monitoring station 2000. In the video image monitoring station 2000, a method for reconstructing video image coding data is different. In this case, the rearrangement of the basic video image coding data and the supplementary video image coding data is performed based on a macroblock address, which is information showing the position of the first macroblock of a slice. Alternatively, an area position may be coded in an area different from that of the video image coding data such as a UDP extended area, and the rearrangement may be performed based on the area position.

[0081] As described above, by transmitting a basic hierarchy area as basic hierarchical coding data and transmitting a supplementary hierarchy area as supplementary hierarchical coding data, the supplementary hierarchy area can be transmitted in a transmission rate

period where there is a margin in a transmission rate while transmitting the basic hierarchy area in real time. By this, after supplementary hierarchical coding data is received, video image coding data can be reconstructed from basic hierarchical coding data and the supplementary hierarchical coding data, and a video image consisting of all areas can be viewed while viewing a basic hierarchy area in real time.

[0082] [Third embodiment]

An explanation will be given in the following regarding a third embodiment. An explanation will be given mainly of differences from the second embodiment. There are two types of transmission structures in the third embodiment: basic hierarchical data (A) and supplementary hierarchical data (B). Basic hierarchical data is provided to the first transmission unit 102 as basic video image coding data, and supplementary hierarchical data is provided to the memory unit 103 as supplementary video image coding data.

[0083] The predictive transmission structure setting unit 100 sets a prediction structure and a transmission structure based on the transmission rate provided by the transmission rate acquisition unit 105 (S1001). An explanation will now be given regarding the setting of a transmission structure according to the third embodiment. Video image coding data is classified syntax-wise into a

header, prediction information data, and prediction error data. Further, the prediction error data is classified into low frequency prediction error data and high frequency prediction error data. Low frequency prediction error data represents information regarding a direct-current component of orthogonal transformation, and high frequency prediction error data represents information regarding an alternating-current component of orthogonal transformation.

[0084] In a transmission rate period T1 (transmission rate R1) and a transmission rate period T4 (transmission rate R4), a header, prediction information data, and prediction error data are set to be basic hierarchical data. In a transmission rate period T2 (transmission rate R2), a header, prediction information data, and prediction error data are set to be basic hierarchical data, and high frequency prediction error data is set to be supplementary hierarchical data. In a transmission rate period T3 (transmission rate R3), a header and prediction information data are set to be basic hierarchical data, and prediction information data is set to be supplementary hierarchical data.

[0085] The video image coding unit 101 codes a video image that is input from the terminal 1 into basic hierarchical coding data and supplementary hierarchical coding data based on a transmission structure (S1003).

[0086] In the above, video image coding data is

classified syntax-wise into a header, prediction information data, and prediction error data, and the header, the prediction information data, and the prediction error data are each set to be basic hierarchical data or supplementary hierarchical data. However, this is non-limiting. For example, inter prediction and orthogonal transformation are performed in a variable size in AVC or the like. Thus, setting to basic hierarchical data and supplementary hierarchical data can be performed based on a block size in the same way as, for example, setting a block having a predetermined block size or less to be basic hierarchical data and a block having the predetermined block size or larger to be supplementary hierarchical data (the basic hierarchical data and the supplementary hierarchical data may be switched for the setting). As a block size in this case, a block size for inter prediction may be selected when the quality of a video image to be transmitted is desired to be controlled based on the magnitude of motion in a video image, and a block size for orthogonal transformation may be selected when the quality of a video image to be transmitted is desired to be controlled based on the priority in the magnitude of a prediction error. This allows the proportion of basic hierarchical coding data to supplementary hierarchical coding data to be set flexibly according to the priority in the quality of a video image to be transmitted.

[0087] As described above, by transmitting a part of the syntax of video image coding data as basic hierarchical coding data and transmitting syntax for areas other than a basic hierarchy area as supplementary hierarchical coding data, the video image coding data can be reconstructed from the basic hierarchical coding data and the supplementary hierarchical coding data after the supplementary hierarchical coding data is received, and detailed information of a video image can be viewed, while viewing the basic information of the video image in real time.

[0088] [Exemplary variation of third embodiment]

An explanation will be given in the following regarding an exemplary variation of the third embodiment. An explanation will be given regarding differences from the third embodiment. In the exemplary variation, the setting of a transmission structure is different from that of the third embodiment.

[0089] As a first exemplary variation, it is assumed that a luminance component Y represents basic hierarchical coding data and that a first color difference component Cb and a second color difference component Cr represent supplementary hierarchical coding data. As described above, by transmitting a luminance component as basic hierarchical coding data and transmitting a first color difference component and a second color difference component as supplementary hierarchical coding data, while viewing a

monochrome video image in real time, video image coding data can be reconstructed from the basic hierarchical coding data and the supplementary hierarchical coding data after the supplementary hierarchical coding data is received so as to view a color video image.

[0090] [Fourth embodiment]

An explanation will be given for a forth embodiment in the following mainly regarding differences from the first embodiment. Fig. 7 is a diagram explaining a video image coding data transmission and reception system according to the fourth embodiment. In Fig. 7, three monitoring cameras 1100, which represent an example of a video image coding data transmitter, are connected to a video image coding data relay device 1200 via a second network. Further, the video image coding data relay device 1200 is connected to the video image monitoring station 2000, which is an example of a video image coding data receiver, via a first network. An example of the second network is wireless LAN such as WiFi, and an example of the first network is LTE. The video image coding data relay device 1200 is installed, for example, inside a smartphone as an example of an LTE relay station.

[0091] (Configuration of monitoring camera 1100 and configuration of video image coding data relay device 1200)

An explanation will be first given regarding the configuration of a monitoring camera 1000. A monitoring

camera 1000 is provided with a video image coding unit 101 and a third transmission unit 107.

[0092] Based on a transmission structure and a prediction structure set by a predictive transmission structure setting unit 122 of a video image coding data relay device 1200, the video image coding unit 101 codes a video image that is input from a terminal 1 and generates basic video image coding data that corresponds to a basic hierarchy and supplementary video image coding data that corresponds to a supplementary hierarchy. The video image coding unit 101 provides a video image stream containing the basic video image coding data and the supplementary video image coding data to the third transmission unit 107.

[0093] The third transmission unit 107 transmits the video image stream provided from the video image coding unit 101 to the video image coding data relay device 1200 via the second network.

[0094] An explanation will now be given regarding the configuration of a video image coding data relay device 1200. A video image coding data relay device 1200 is provided with a second receiving unit 120, a video image coding data analysis unit 121, a predictive transmission structure setting unit 122, a first transmission unit 102, a memory unit 103, a second transmission unit 104, a transmission rate acquisition unit 105, and a transmission control unit 106.

[0095] The transmission rate acquisition unit 105 acquires the transmission rate of a first network and provides the acquired transmission rate to the transmission control unit 106 and the predictive transmission structure setting unit 122.

[0096] The predictive transmission structure setting unit 122 sets the transmission structure of a video image based on the transmission rate provided from the transmission rate acquisition unit 105 and also sets a prediction structure that indicates a reference relationship of each picture of the video image.

[0097] The second receiving unit 120 receives a video image stream from a monitoring camera 1100 and provides the video image stream to the video image coding data analysis unit 121.

[0098] Based on the transmission structure and the prediction structure set by the predictive transmission structure setting unit 122, the video image coding data analysis unit 121 separates and extracts basic video image coding data and supplementary video image coding data from a video image stream, provides the basic video image coding data to the first transmission unit, and stores the supplementary video image coding data in the memory unit 103. In the above, the basic video image coding data and the supplementary video image coding data are separated from the video image stream based on the transmission

structure and the prediction structure. Alternatively, the basic video image coding data and the supplementary video image coding data can be respectively assigned with different identifiers in advance and separated.

[0099] The first transmission unit 102 transmits the basic video image coding data provided from the video image coding data analysis unit 121 to the video image monitoring station 2000 via the first network.

[0100] Based on the transmission rate provided from the transmission rate acquisition unit 105, the transmission control unit 106 controls the transmission of the supplementary video image coding data stored in the memory unit 103. When the transmission control unit 106 issues an instruction for transmitting the supplementary video image coding data based on the transmission rate, the second transmission unit 104 reads out the supplementary video image coding data stored in the memory unit 103 and transmits the supplementary video image coding data to the video image monitoring station 2000 via the first network.

[0101] In the fourth embodiment, although the video image coding data relay device 1200 does not perform a process of coding a video image since the video image coding data relay device 1200 receives video image coding data already coded by the monitoring camera 1100, the video image coding data relay device 1200 performs the same process as in the monitoring camera 1100 according to the

first embodiment for the transmission of video image data after coding. The configuration and operation of the video image monitoring station 2000 are the same as those in the first embodiment.

[0102] The video image coding data relay device 1200 is realized by the cooperation of hardware and software in an information processing device or the like provided with a CPU (Central Processing Unit), a frame memory, a hard disk, and the like. By the operation of the above constituting elements, the video image coding data relay device 1200 achieves functional constituting elements explained in the following.

[0103] (Overview of operation of monitoring camera 1100)

An explanation will now be given regarding the overview of the operation of the monitoring camera 1100. The prediction structure and the transmission structure received from the second network are provided to the video image coding unit 101. The video image coding unit 101 generates video image coding data based on the prediction structure and the transmission structure that are received and provides the video image coding data to the third transmission unit 107. The third transmission unit 107 transmits the video image coding data provided from the video image coding unit 101 to the second network in real time.

[0104] (Overview of operation of video image coding data

relay device 1200)

An explanation will now be given regarding the overview of the operation of the video image coding data relay device 1200.

[0105] The predictive transmission structure setting unit 122 sets a prediction structure and a transmission structure based on the transmission rate provided by the transmission rate acquisition unit 105. The prediction structure and the transmission structure that are set are provided to the video image coding unit 101 via the second network. It is assumed that the setting of the prediction structure and the transmission structure is performed based on, for example, a specification such as Open Network Video Interface Forum (ONVIF). Further, the prediction structure and the transmission structure that are set are also provided to the video image coding data analysis unit 121. On the other hand, the second receiving unit 120 receives the video image coding data transmitted from the third transmission unit 107 via the second network.

[0106] Based on the prediction structure and the transmission structure provided by the predictive transmission structure setting unit 122, the video image coding data analysis unit 121 separates the video image coding data input from the second receiving unit 120 into basic video image coding data and supplementary video image coding data, provides the basic video image coding data to

the first transmission unit 102, and provides the supplementary video image coding data to the memory unit 103. A process of transmitting the basic video image coding data and the supplementary video image coding data that follows after this is the same as that in the first embodiment. The basic video image coding data is transmitted to the video image monitoring station 2000 in real time via the first network, and the supplementary video image coding data is transmitted to the video image monitoring station 2000 via the first network when there is a margin in the transmission rate of the first network.

[0107] As described above, in the fourth embodiment, by using a smartphone or the like that has a transmission and reception function as a video image coding data relay device in advance, it is no longer necessary to add a function of distinguishing a basic hierarchy from a supplementary hierarchy and transmitting the basic hierarchy from the supplementary hierarchy to a monitoring camera. Thus, a conventional function of a monitoring camera system can be easily expanded.

[0108] The processes described in the above embodiments can obviously be implemented by hardware-based apparatus for transmission, storage, or reception. Alternatively, the processes can be implemented by firmware stored in a read-only memory (ROM), a flash memory, etc., or by software on a computer, etc. The firmware program or the

software program may be made available on, for example, a computer readable recording medium. Alternatively, the programs may be made available from a server via a wired or wireless network. Still alternatively, the programs may be made available in the form of data transmission over terrestrial or satellite digital broadcast systems.

[0109] Described above is an explanation of the present invention based on the embodiments. The embodiments are intended to be illustrative only, and it will be obvious to those skilled in the art that various modifications to constituting elements and processes could be developed and that such modifications are also within the scope of the present invention.

WHAT IS CLAIMED IS:

1. A video image coding data transmitter comprising:

a transmission rate acquisition unit that acquires the transmission rate of a network;

a transmission structure setting unit that sets a transmission structure including a basic hierarchy and a supplementary hierarchy;

a first transmission unit that transmits basic video image coding data of the basic hierarchy;

a memory unit that stores supplementary video image coding data of the supplementary hierarchy;

a second transmission unit that transmits the supplementary video image coding data stored in the memory unit; and

a transmission control unit that controls the second transmission unit according to the transmission rate.

2. The video image coding data transmitter according to claim 1, further comprising:

a video image coding data analysis unit that distinguishes the basic video image coding data of the basic hierarchy from the supplementary video image coding data of the supplementary hierarchy that are included in video image coding data based on the transmission structure.

3. The video image coding data transmitter according to claim 1,

wherein the transmission structure setting unit sets the proportion of the basic hierarchy to the supplementary hierarchy such that the ratio of the basic hierarchy is increased as the transmission rate becomes larger and the ratio of the supplementary hierarchy is increased as the transmission rate becomes smaller.

4. The video image coding data transmitter according to claim 1,

wherein a period for acquiring the transmission rate or a period for setting the transmission structure is changed according to at least one of the number of pictures in the supplementary hierarchy stored in the memory unit and the transmission rate.

5. The video image coding data transmitter according to claim 1,

wherein the transmission structure setting unit sets a part of the area of a picture to represent the basic hierarchy and a part of the area other than the part representing the basic hierarchy to be the supplementary hierarchy.

6. The video image coding data transmitter according

to claim 1,

wherein the transmission structure setting unit sets a part of the syntax of the video image coding data to represent the basic hierarchy and a part of the syntax that is different from the part representing the basic hierarchy to represent the supplementary hierarchy.

7. The video image coding data transmitter according to claim 1,

wherein the transmission structure setting unit sets a video image consisting of a luminance component to represent the basic hierarchy and a video image consisting of a color difference component to represent the supplementary hierarchy.

8. A video image coding data receiver comprising:

a first receiving unit that receives basic video image coding data;

a video image decoding unit that decodes the received basic video image coding data so as to reproduce a video image;

a second receiving unit that receives supplementary video image coding data including a supplementary hierarchical picture whose coding order and display order are earlier than those of a basic hierarchical picture included in the basic video image coding data;

a basic video image coding data acquisition unit that acquires basic video image coding data received before supplementary video image coding data that has been received at the moment; and

a video image coding data reconstruction unit that reconstructs video image coding data from the basic video image coding data acquired by the basic video image coding data acquisition unit and the supplementary video image coding data received by the second receiving unit.

9. A video image coding data transmission method comprising:

acquiring the transmission rate of a network;

setting a transmission structure including a basic hierarchy and a supplementary hierarchy;

transmitting basic video image coding data of the basic hierarchy;

storing supplementary video image coding data of the supplementary hierarchy;

transmitting the stored supplementary video image coding data; and

controlling the transmission according to the transmission rate.

10. A video image coding data transmission program embedded in a non-transitory computer readable recording

medium that, when executed on a computer, implements:

acquiring the transmission rate of a network;

setting a transmission structure including a basic hierarchy and a supplementary hierarchy;

coding a video image based on the transmission structure into video image coding data including basic video image coding data of the basic hierarchy and supplementary video image coding data of the supplementary hierarchy;

transmitting basic video image coding data of the basic hierarchy;

storing supplementary video image coding data of the supplementary hierarchy;

transmitting the stored supplementary video image coding data; and

controlling the transmission according to the transmission rate.

11. A video image coding data transmission and reception system comprising: a video image coding data transmitter that codes and transmits a video image; and a video image coding data receiver that receives and reconstructs video image coding data,

wherein the video image coding data transmitter includes:

a transmission rate acquisition unit that acquires the

transmission rate of a network;

a transmission structure setting unit that sets a transmission structure including a basic hierarchy and a supplementary hierarchy;

a first transmission unit that transmits basic video image coding data of the basic hierarchy;

a memory unit that stores supplementary video image coding data of the supplementary hierarchy;

a second transmission unit that transmits the supplementary video image coding data stored in the memory unit; and

a transmission control unit that controls the second transmission unit according to the transmission rate, and

wherein the video image coding data receiver includes:

a first receiving unit that receives the basic video image coding data;

a video image decoding unit that decodes the received basic video image coding data so as to reproduce a video image;

a second receiving unit that receives the supplementary video image coding data including a supplementary hierarchical picture having coding order and display order that are earlier than those of a basic hierarchical picture included in the basic video image coding data;

a basic video image coding data acquisition unit that

acquires basic video image coding data received before supplementary video image coding data that is currently received; and

a video image coding data reconstruction unit that reconstructs video image coding data from the basic video image coding data acquired by the basic video image coding data acquisition unit and the supplementary video image coding data received by the second receiving unit.

ABSTRACT OF THE DISCLOSURE

A transmission rate acquisition unit acquires the transmission rate of a network. A predictive transmission structure setting unit sets a transmission structure including a basic hierarchy and a supplementary hierarchy. A first transmission unit transmits basic video image coding data of the basic hierarchy. A memory unit stores supplementary video image coding data of the supplementary hierarchy. A second transmission unit transmits the supplementary video image coding data stored in the memory unit. A transmission control unit controls the second transmission unit according to the transmission rate.

FIG.1

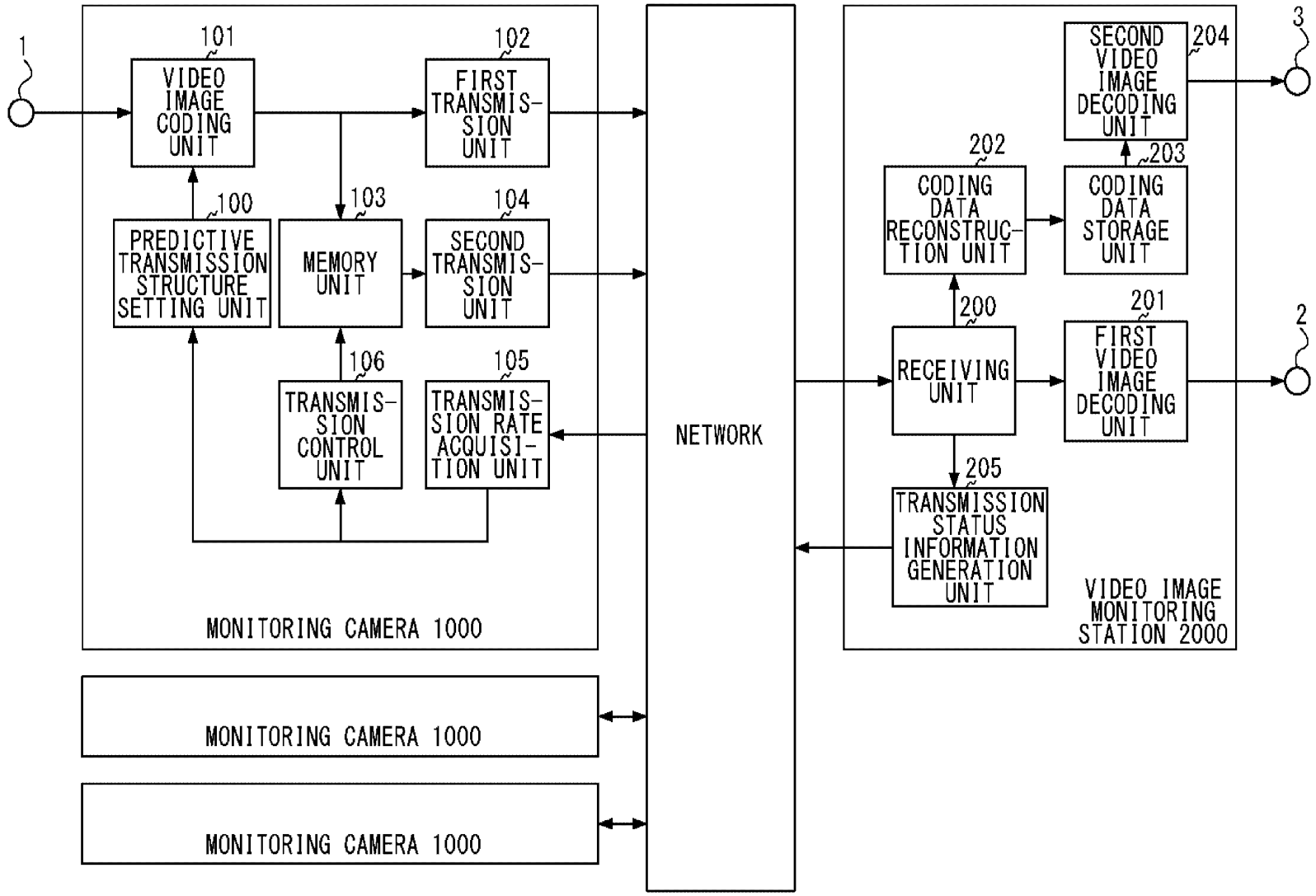
1
101
VIDEO IMAGE CODING UNIT
102
FIRST TRANSMIS-SION UNIT
100
PREDICTIVE TRANSMISSION STRUCTURE SETTING UNIT
103
MEMORY UNIT
104
SECOND TRANSMIS-SION UNIT
106
TRANSMIS-SION CONTROL UNIT
105
TRANSMIS-SION RATE ACQUISI-TION UNIT
MONITORING CAMERA 1000
MONITORING CAMERA 1000
MONITORING CAMERA 1000
NETWORK
SECOND VIDEO IMAGE DECODING UNIT
204
3
202
CODING DATA RECONSTRUC-TION UNIT
203
CODING DATA STORAGE UNIT
200
RECEIVING UNIT
201
FIRST VIDEO IMAGE DECODING UNIT
2
205
TRANSMISSION STATUS INFORMATION GENERATION UNIT
VIDEO IMAGE MONITORING STATION 2000

FIG.2

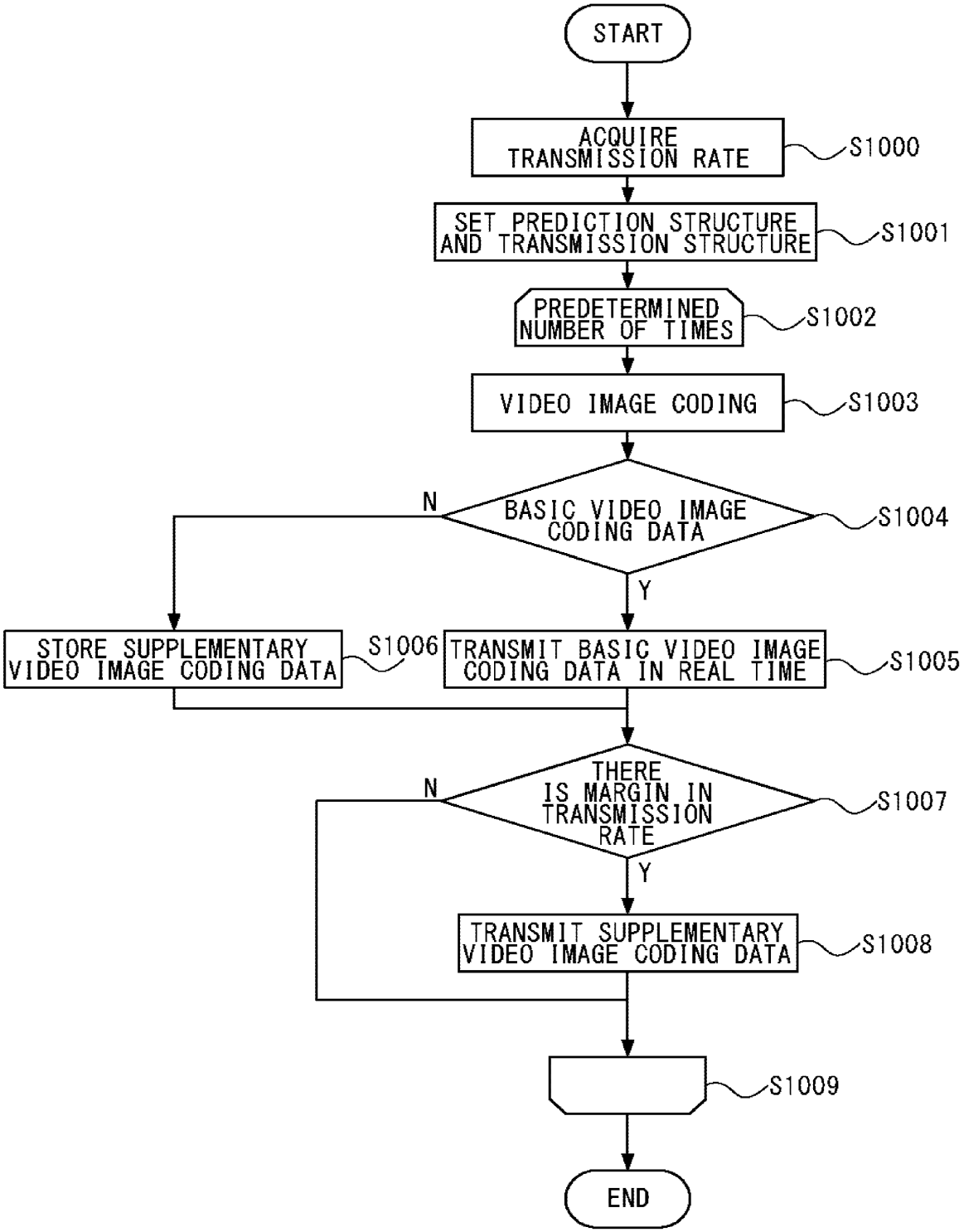
START
ACQUIRE TRANSMISSION RATE
S1000
SET PREDICTION STRUCTURE AND TRANSMISSION STRUCTURE
S1001
PREDETERMINED NUMBER OF TIMES
S1002
VIDEO IMAGE CODING
S1003
BASIC VIDEO IMAGE CODING DATA
S1004
N
Y
STORE SUPPLEMENTARY VIDEO IMAGE CODING DATA
S1006
TRANSMIT BASIC VIDEO IMAGE CODING DATA IN REAL TIME
S1005
THERE IS MARGIN IN TRANSMISSION RATE
S1007
N
Y
TRANSMIT SUPPLEMENTARY VIDEO IMAGE CODING DATA
S1008
S1009
END

FIG.3

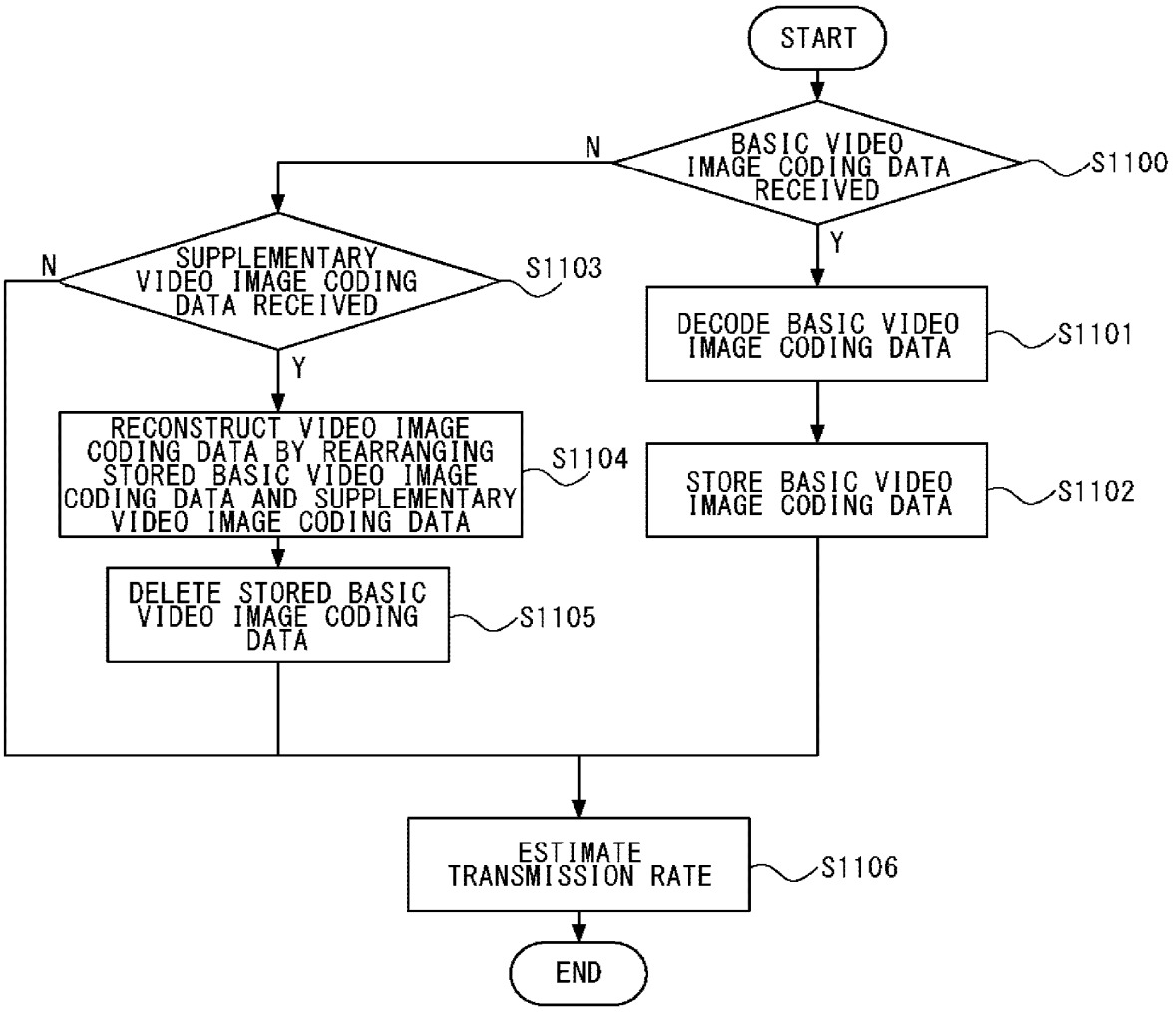
START
BASIC VIDEO IMAGE CODING DATA RECEIVED
S1100
N
Y
SUPPLEMENTARY VIDEO IMAGE CODING DATA RECEIVED
S1103
N
Y
DECODE BASIC VIDEO IMAGE CODING DATA
S1101
RECONSTRUCT VIDEO IMAGE CODING DATA BY REARRANGING STORED BASIC VIDEO IMAGE CODING DATA AND SUPPLEMENTARY VIDEO IMAGE CODING DATA
S1104
STORE BASIC VIDEO IMAGE CODING DATA
S1102
DELETE STORED BASIC VIDEO IMAGE CODING DATA
S1105
ESTIMATE TRANSMISSION RATE
S1106
END

FIG.4

	TRANSMISSION RATE PERIOD T1 (TRANSMISSION RATE R1)					TRANSMISSION RATE PERIOD T2 (TRANSMISSION RATE R2)				TRANSMISSION RATE PERIOD T3 (TRANSMISSION RATE R3)										TRANSMISSION RATE PERIOD T4 (TRANSMISSION RATE R4)					
PICTURE NUMBER	0	1	2		9	10	11		18	19	20	21	22	23	24	25	26	27	28	29	30	31	32	33		39
PICTURE TYPE	I	P	P		P	P	P		P	P	I	P	P	P	P	P	P	P	P	P	I	P	P	P		P
TRANSMISSION STRUCTURE	A	A	A	···	A	A	B	···	A	B	A	B	B	A	B	B	A	B	B	B	A	A	A	A	···	A
REFERENCE PICTURE		0	1		8	9	10		16	18		20	21	20	23	24	23	26	27	28		30	31	32		38
			0		7	8	9		14	17			20		22	23	20	25	26	27			30	31		37

FIG.5

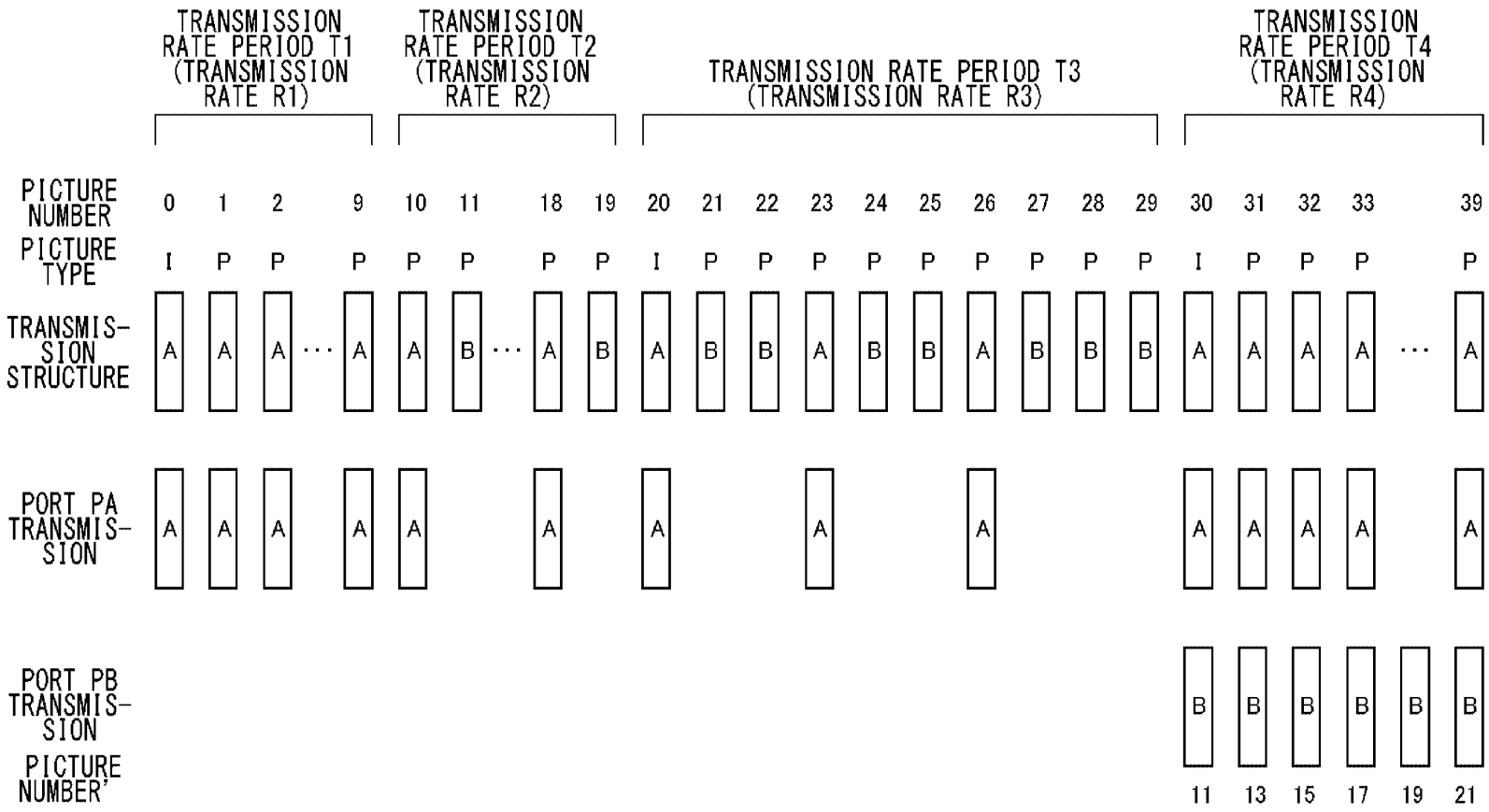
TRANSMISSION RATE PERIOD T1 (TRANSMISSION RATE R1)
TRANSMISSION RATE PERIOD T2 (TRANSMISSION RATE R2)
TRANSMISSION RATE PERIOD T3 (TRANSMISSION RATE R3)
TRANSMISSION RATE PERIOD T4 (TRANSMISSION RATE R4)
PICTURE NUMBER
0 1 2 9 10 11 18 19 20 21 22 23 24 25 26 27 28 29 30 31 32 33 39
PICTURE TYPE
I P P P P P P P I P P P P P P P P P I P P P P
TRANSMISSION STRUCTURE
A A A ··· A A B ··· A B A B B A B B A B B B A A A A ··· A
PORT PA TRANSMISSION
A A A A A A A A A A A A
PORT PB TRANSMISSION
B B B B B B
PICTURE NUMBER'
11 13 15 17 19 21

FIG.6

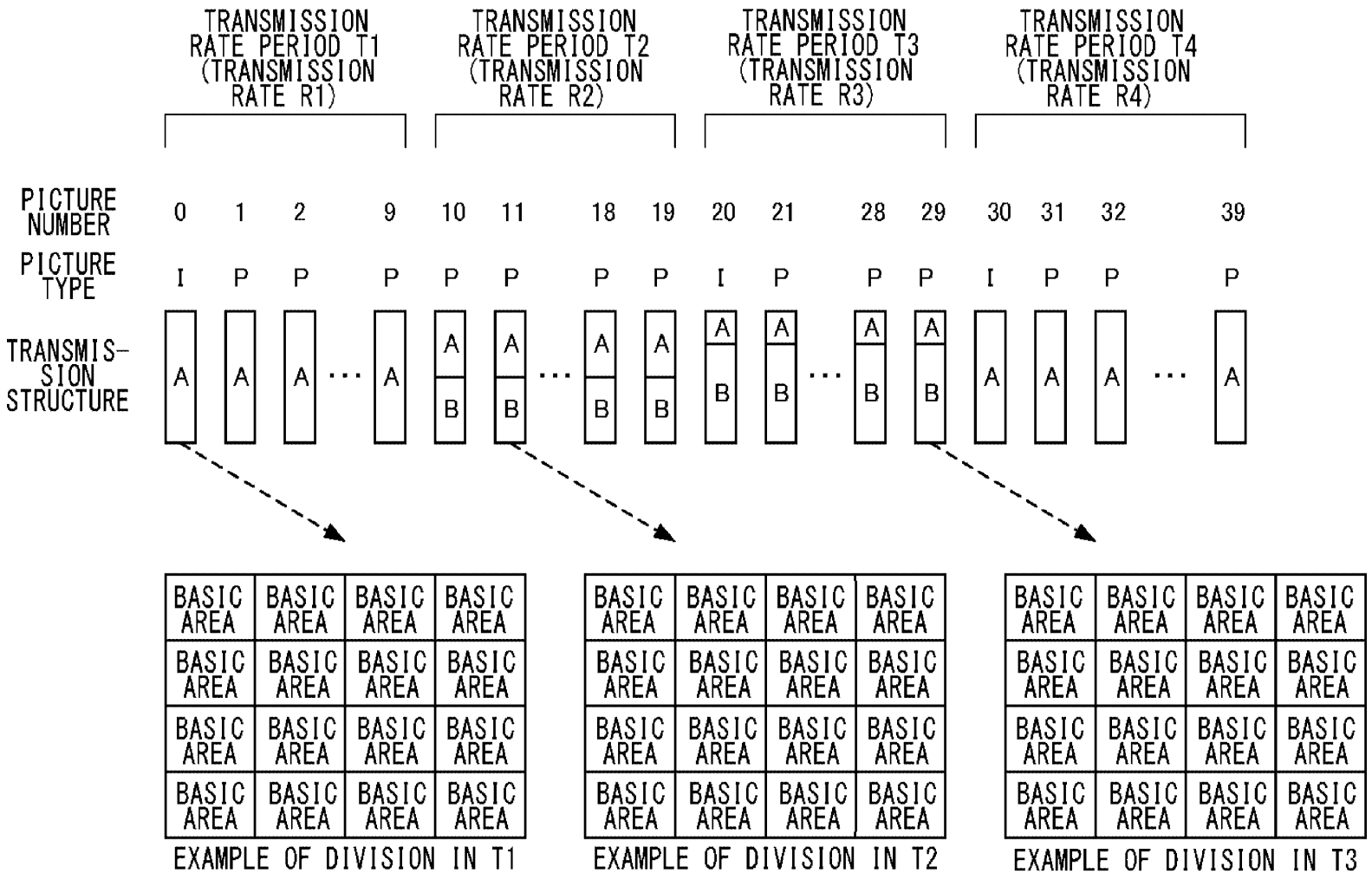
TRANSMISSION RATE PERIOD T1 (TRANSMISSION RATE R1)
TRANSMISSION RATE PERIOD T2 (TRANSMISSION RATE R2)
TRANSMISSION RATE PERIOD T3 (TRANSMISSION RATE R3)
TRANSMISSION RATE PERIOD T4 (TRANSMISSION RATE R4)
PICTURE NUMBER
0 1 2 9 10 11 18 19 20 21 28 29 30 31 32 39
PICTURE TYPE
I P P P P P P P I P P P I P P P
TRANSMIS-SION STRUCTURE
A A A ··· A
A B A B ··· A B A B
A B A B ··· A B A B
A A A ··· A
BASIC AREA
EXAMPLE OF DIVISION IN T1
EXAMPLE OF DIVISION IN T2
EXAMPLE OF DIVISION IN T3

FIG.7

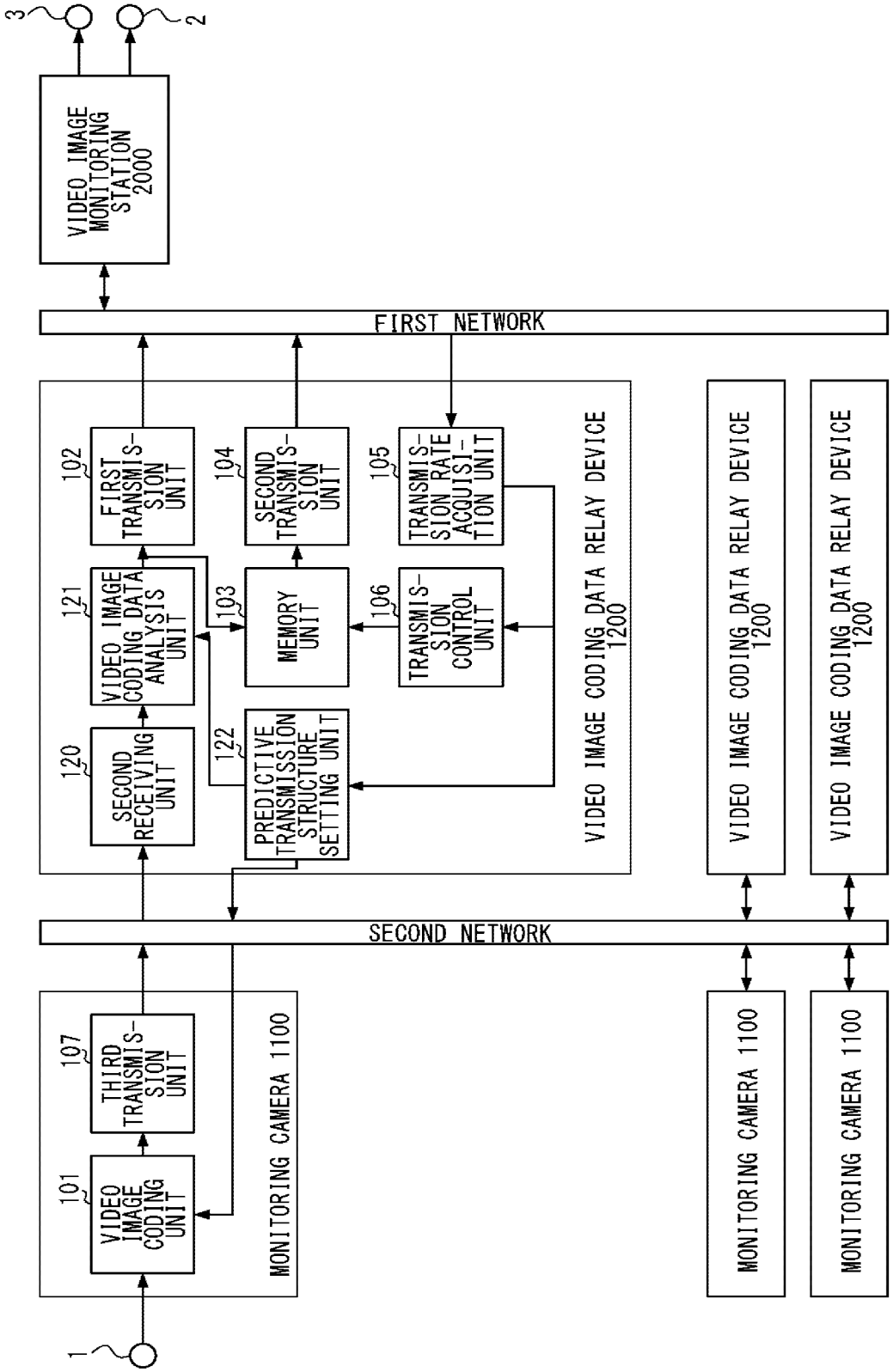
1
2
3
VIDEO IMAGE MONITORING STATION 2000
FIRST NETWORK
VIDEO IMAGE CODING DATA RELAY DEVICE 1200
102
FIRST TRANSMIS-SION UNIT
104
SECOND TRANSMIS-SION UNIT
105
TRANSMIS-SION RATE ACQUISI-TION UNIT
121
VIDEO IMAGE CODING DATA ANALYSIS UNIT
103
MEMORY UNIT
106
TRANSMIS-SION CONTROL UNIT
120
SECOND RECEIVING UNIT
122
PREDICTIVE TRANSMISSION STRUCTURE SETTING UNIT
SECOND NETWORK
107
THIRD TRANSMIS-SION UNIT
101
VIDEO IMAGE CODING UNIT
MONITORING CAMERA 1100
VIDEO IMAGE CODING DATA RELAY DEVICE 1200
VIDEO IMAGE CODING DATA RELAY DEVICE 1200
MONITORING CAMERA 1100
MONITORING CAMERA 1100

UNITED STATES PATENT AND TRADEMARK OFFICE

UNITED STATES DEPARTMENT OF COMMERCE
United States Patent and Trademark Office
Address: COMMISSIONER FOR PATENTS
P.O. Box 1450
Alexandria, Virginia 22313-1450
www.uspto.gov

APPLICATION NO.	FILING DATE	FIRST NAMED INVENTOR	ATTORNEY DOCKET NO.	CONFIRMATION NO.
14/657,359	03/13/2015	Hideki TAKEHARA	119547-380321	3775

26694 7590 11/10/2016
VENABLE LLP
P.O. BOX 34385
WASHINGTON, DC 20043-9998

EXAMINER
HANCE, ROBERT J

ART UNIT	PAPER NUMBER
2421	

NOTIFICATION DATE	DELIVERY MODE
11/10/2016	ELECTRONIC

Please find below and/or attached an Office communication concerning this application or proceeding.

The time period for reply, if any, is set in the attached communication.

Notice of the Office communication was sent electronically on above-indicated "Notification Date" to the following e-mail address(es):

PTOMail@Venable.com
cavanhouten@venable.com

Office Action Summary	Application No. 14/657,359	Applicant(s) TAKEHARA ET AL.	
	Examiner ROBERT HANCE	Art Unit 2421	AIA (First Inventor to File) Status Yes

-- The MAILING DATE of this communication appears on the cover sheet with the correspondence address --

Period for Reply

A SHORTENED STATUTORY PERIOD FOR REPLY IS SET TO EXPIRE 3 MONTHS FROM THE MAILING DATE OF THIS COMMUNICATION.

- Extensions of time may be available under the provisions of 37 CFR 1.136(a). In no event, however, may a reply be timely filed after SIX (6) MONTHS from the mailing date of this communication.
- If NO period for reply is specified above, the maximum statutory period will apply and will expire SIX (6) MONTHS from the mailing date of this communication.
- Failure to reply within the set or extended period for reply will, by statute, cause the application to become ABANDONED (35 U.S.C. § 133). Any reply received by the Office later than three months after the mailing date of this communication, even if timely filed, may reduce any earned patent term adjustment. See 37 CFR 1.704(b).

Status

1)☒ Responsive to communication(s) filed on *3/13/15*.

☐ A declaration(s)/affidavit(s) under **37 CFR 1.130(b)** was/were filed on _____.

2a)☐ This action is **FINAL**. 2b)☒ This action is non-final.

3)☐ An election was made by the applicant in response to a restriction requirement set forth during the interview on _____; the restriction requirement and election have been incorporated into this action.

4)☐ Since this application is in condition for allowance except for formal matters, prosecution as to the merits is closed in accordance with the practice under *Ex parte Quayle*, 1935 C.D. 11, 453 O.G. 213.

Disposition of Claims*

5)☒ Claim(s) *1-11* is/are pending in the application.

5a) Of the above claim(s) _____ is/are withdrawn from consideration.

6)☐ Claim(s) _____ is/are allowed.

7)☒ Claim(s) *1-11* is/are rejected.

8)☐ Claim(s) _____ is/are objected to.

9)☐ Claim(s) _____ are subject to restriction and/or election requirement.

* If any claims have been determined allowable, you may be eligible to benefit from the **Patent Prosecution Highway** program at a participating intellectual property office for the corresponding application. For more information, please see http://www.uspto.gov/patents/init_events/pph/index.jsp or send an inquiry to PPHfeedback@uspto.gov.

Application Papers

10)☐ The specification is objected to by the Examiner.

11)☒ The drawing(s) filed on *3/13/15* is/are: a)☒ accepted or b)☐ objected to by the Examiner.

Applicant may not request that any objection to the drawing(s) be held in abeyance. See 37 CFR 1.85(a).

Replacement drawing sheet(s) including the correction is required if the drawing(s) is objected to. See 37 CFR 1.121(d).

Priority under 35 U.S.C. § 119

12)☒ Acknowledgment is made of a claim for foreign priority under 35 U.S.C. § 119(a)-(d) or (f).

Certified copies:

a)☒ All b)☐ Some** c)☐ None of the:

1.☒ Certified copies of the priority documents have been received.

2.☐ Certified copies of the priority documents have been received in Application No. _____.

3.☐ Copies of the certified copies of the priority documents have been received in this National Stage application from the International Bureau (PCT Rule 17.2(a)).

** See the attached detailed Office action for a list of the certified copies not received.

Attachment(s)

1) ☒ Notice of References Cited (PTO-892)

2) ☒ Information Disclosure Statement(s) (PTO/SB/08a and/or PTO/SB/08b) Paper No(s)/Mail Date _____.

3) ☐ Interview Summary (PTO-413) Paper No(s)/Mail Date. _____ .

4) ☐ Other: _____.

DETAILED ACTION

1. The present application, filed on or after March 16, 2013, is being examined under the first inventor to file provisions of the AIA.

Note

Claim 10 is directed toward program code embedded in a non-transitory computer readable recording medium. This is interpreted as being an article of manufacture, statutory under 35 USC 101.

Claim Rejections - 35 USC § 112

2. The following is a quotation of 35 U.S.C. 112(b):

> (b) CONCLUSION.—The specification shall conclude with one or more claims particularly pointing out and distinctly claiming the subject matter which the inventor or a joint inventor regards as the invention.

The following is a quotation of 35 U.S.C. 112 (pre-AIA), second paragraph:

> The specification shall conclude with one or more claims particularly pointing out and distinctly claiming the subject matter which the applicant regards as his invention.

3. Claims 1-8 and 11 rejected under 35 U.S.C. 112(b) or 35 U.S.C. 112 (pre-AIA), second paragraph, as being indefinite for failing to particularly point out and distinctly claim the subject matter which the inventor or a joint inventor, or for pre-AIA the applicant regards as the invention.

Claim elements “transmission rate acquisition unit”, “transmission structure setting unit”, “first transmission unit”, “second transmission unit”, “transmission control unit”, and “video image coding data analysis unit” (claim 1); “receiving unit”, “video image decoding unit”, “second receiving unit”, “basic video image coding data

acquisition unit", and "video image coding data reconstruction unit" (claim 8); "video image coding data transmitter", "video image coding data receiver", and "second receiving unit" (claim 11) are limitations that invokes 35 U.S.C. 112, sixth paragraph. However, the written description fails to disclose the corresponding structure, material, or acts for the claimed function. These elements are merely described as "black box" style elements of a computing system without describing a specific structure for each element.

Applicant may:

(a) Amend the claim so that the claim limitation will no longer be interpreted as a limitation under 35 U.S.C. 112, sixth paragraph; or

(b) Amend the written description of the specification such that it expressly recites what structure, material, or acts perform the claimed function without introducing any new matter (35 U.S.C. 132(a)).

If applicant is of the opinion that the written description of the specification already implicitly or inherently discloses the corresponding structure, material, or acts so that one of ordinary skill in the art would recognize what structure, material, or acts perform the claimed function, applicant should clarify the record by either:

(a) Amending the written description of the specification such that it expressly recites the corresponding structure, material, or acts for performing the claimed function and clearly links or associates the structure, material, or acts to the claimed function, without introducing any new matter (35 U.S.C. 132(a)); or

(b) Stating on the record what the corresponding structure, material, or acts, which are implicitly or inherently set forth in the written description of the specification, perform the claimed function. For more information, see 37 CFR 1.75(d) and MPEP §§ 608.01(o) and 2181.

Claim Rejections - 35 USC § 102

4. The following is a quotation of the appropriate paragraphs of 35 U.S.C. 102 that form the basis for the rejections under this section made in this Office action:

> A person shall be entitled to a patent unless –
>
> (a)(1) the claimed invention was patented, described in a printed publication, or in public use, on sale or otherwise available to the public before the effective filing date of the claimed invention.

5. Claims 1-3, 5, 9, and 10 are rejected under 35 U.S.C. 102(a)(1) as being anticipated by Radha et al., US Patent No. 6,292,512.

As to claim 1 Radha discloses a video image coding data transmitter comprising:

a transmission rate acquisition unit that acquires the transmission rate of a network (**Fig. 6: 48; col. 6 lines 28-38**);

a transmission structure setting unit that sets a transmission structure including a basic hierarchy and a supplementary hierarchy (**Fig. 6: 48; col. 6 lines 28-38; col. 7 lines 34-46; Fig. 10 – the bit-rate of the base layer (basic hierarchy) and**

enhancement layer (supplementary hierarchy) are set based on measured bandwidth, thus setting the transmission structure);

a first transmission unit that transmits basic video image coding data of the basic hierarchy (**Fig. 6: 55; col. 8 lines 15-47**);

a memory unit that stores supplementary video image coding data of the supplementary hierarchy; a second transmission unit that transmits the supplementary video image coding data stored in the memory unit; and a transmission control unit that controls the second transmission unit according to the transmission rate (**Fig. 6: 54; col. 7 line 38 – col. 8 line 47; Fig. 10 and its description – a plurality of enhancement layers are produced (for example by DCT, inherently involving storage in memory), and the data sent is chosen based on the measured bandwidth**).

As to claim 2 Radha discloses the video image coding data transmitter according to claim 1, further comprising: a video image coding data analysis unit that distinguishes the basic video image coding data of the basic hierarchy from the supplementary video image coding data of the supplementary hierarchy that are included in video image coding data based on the transmission structure (**Fig. 6: 55; col. 8 lines 15-39 – controller 55 selects base and enhancement layer images to transmit, therefore distinguishes between the two based on the determined transmission structure**).

As to claim 3 Radha discloses the video image coding data transmitter according to claim 1, wherein the transmission structure setting unit sets the proportion of the basic hierarchy to the supplementary hierarchy such that the ratio of the basic hierarchy is increased as the transmission rate becomes larger and the ratio of the supplementary hierarchy is increased as the transmission rate becomes smaller (**Fig. 10; col. 9 line 30 - col. 10 line 4 – at higher bandwidth, more data is sent in the base layer, thereby increasing the ration. At lower bandwidths the inverse occurs**).

As to claim 5 Radha discloses the video image coding data transmitter according to claim 1, wherein the transmission structure setting unit sets a part of the area of a picture to represent the basic hierarchy and a part of the area other than the part representing the basic hierarchy to be the supplementary hierarchy (**col. 1 lines 20-35 and lines 56-63 – the residual data in the enhancement layer corresponds to data not present in the base layer, therefore is part of the area other than that represented by the base layer**).

As to claim 9 see rejection of claim 1.

As to claim 10 Radha discloses a video image coding data transmission program embedded in a non-transitory computer readable recording medium that, when executed on a computer, implements:

acquiring the transmission rate of a network (**Fig. 6: 48; col. 6 lines 28-38**);

setting a transmission structure including a basic hierarchy and a supplementary hierarchy (**Fig. 6: 48; col. 6 lines 28-38; col. 7 lines 34-46; Fig. 10 – the bit-rate of the base layer (basic hierarchy) and enhancement layer (supplementary hierarchy) are set based on measured bandwidth, thus setting the transmission structure**);

coding a video image based on the transmission structure into video image coding data including basic video image coding data of the basic hierarchy and supplementary video image coding data of the supplementary hierarchy (**Fig. 7: S702 – S704 and their description**);

transmitting basic video image coding data of the basic hierarchy (**Fig. 6: 55; col. 8 lines 15-47**);

storing supplementary video image coding data of the supplementary hierarchy; transmitting the stored supplementary video image coding data; and controlling the transmission according to the transmission rate (**Fig. 6: 54; col. 7 line 38 – col. 8 line 47; Fig. 10 and its description – a plurality of enhancement layers are produced (for example by DCT, inherently involving storage in memory), and the data sent is chosen based on the measured bandwidth**).

Claim Rejections - 35 USC § 103

6. The following is a quotation of 35 U.S.C. 103 which forms the basis for all obviousness rejections set forth in this Office action:

> A patent for a claimed invention may not be obtained, notwithstanding that the claimed invention is not identically disclosed as set forth in section 102, if the differences between the claimed invention and the prior art are such that the claimed invention as a whole would have been obvious before the effective filing date of the claimed invention to a person having ordinary skill in the art to which the claimed invention pertains. Patentability shall not be negated by the manner in which the invention was made.

7. Claim 4 is rejected under 35 U.S.C. 103 as being unpatentable over Radha in view of Wiseman, US Pub No. 2005/0172232.

As to claim 4 Radha fails to disclose the video image coding data transmitter according to claim 1, wherein a period for acquiring the transmission rate or a period for setting the transmission structure is changed according to at least one of the number of pictures in the supplementary hierarchy stored in the memory unit and the transmission rate.

However, in an analogous art, Wiseman discloses that a period for acquiring a transmission rate is changed according the transmission rate (**[0097] – bandwidth, or transmission rate, is acquired by measuring the time it takes to upload a certain file to a client. Therefore the period required to measure this changes based on available bandwidth**).

It would have been obvious to a skilled artisan at the time of the invention to modify the system of Radha with the teachings of Wiseman, the rationale being to ensure that available bandwidth is accurately measured.

8. Claim 6 is rejected under 35 U.S.C. 103 as being unpatentable over Radha.

As to claim 6 Radha fails to explicitly disclose the video image coding data transmitter according to claim 1, wherein the transmission structure setting unit sets a part of the syntax of the video image coding data to represent the basic hierarchy and a part of the syntax that is different from the part representing the basic hierarchy to represent the supplementary hierarchy.

However, official notice is taken that this was well known in the art at the time of the invention. For example, many known systems were known to set different syntaxes corresponding to base and enhancement layers (i.e. basic and supplementary hierarchies). Therefore it would have been obvious to a skilled artisan to modify the system of Radha to include this, the rationale being to ensure proper decoding by the receiver.

9. Claim 7 is rejected under 35 U.S.C. 103 as being unpatentable over Radha in view of Fogg.

As to claim 7 Radha fails to disclose the video image coding data transmitter according to claim 1, wherein the transmission structure setting unit sets a video image consisting of a luminance component to represent the basic hierarchy and a video image consisting of a color difference component to represent the supplementary hierarchy.

However, in an analogous art, Fogg discloses setting a video image consisting of a luminance component to represent a basic hierarchy and a video image consisting of

a color difference component to represent a supplementary hierarchy (**[0044] – luminance data is carried in the base layer (basic hierarchy) while chrominance is carried in the enhancement layer**).

It would have been obvious to a skilled artisan at the time of the invention to modify the system of Radha with the teachings of Fogg, the rationale being to enable high-quality (although monochromatic) images during periods of reduced bandwidth.

10. Claims 8 and 11 are rejected under 35 U.S.C. 103 as being unpatentable over Radha in view of Van Der Schaar et al., US Patent No. 6,697,426.

As to claim 8 Radha discloses a video image coding data receiver comprising:

a first receiving unit that receives basic video image coding data (**Fig. 9: 60**);

a video image decoding unit that decodes the received basic video image coding data so as to reproduce a video image (**Fig. 9: 58**);

a second receiving unit that receives supplementary video image coding data including a supplementary hierarchical picture (**Fig. 9: 59**);

a basic video image coding data acquisition unit that acquires basic video image coding data (**Fig. 9: 60**); and

a video image coding data reconstruction unit that reconstructs video image coding data from the basic video image coding data acquired by the basic video image coding data acquisition unit and the supplementary video image coding data received by the second receiving unit (**Fig. 9: 60; col. 8 lines 48-67**).

Radha fails to disclose receiving supplementary video image coding data whose coding order and display order are earlier than those of a basic hierarchical picture included in the basic video image coding data; and acquiring basic video image coding data received before supplementary video image coding data that has been received at the moment.

However, in an analogous art, Van Der Schaar discloses receiving supplementary video image coding data whose coding order and display order are earlier than those of a basic hierarchical picture included in the basic video image coding data; and acquiring basic video image coding data received before supplementary video image coding data that has been received at the moment (**Fig. 3; col. 2 line 65 – col. 3 line 65**).

It would have been obvious to a skilled artisan at the time of the invention to modify the system of Radha with the teachings of Van Der Schaar, the rationale being to reduce memory requirements in the receiving device.

As to claim 11 see rejection of claims 1 and 8.

Conclusion

Any inquiry concerning this communication or earlier communications from the examiner should be directed to ROBERT HANCE whose telephone number is (571)270-5319. The examiner can normally be reached on M-F 8:00-5:00.

If attempts to reach the examiner by telephone are unsuccessful, the examiner's supervisor, Nathan Flynn can be reached on (571) 272-1915. The fax phone number for the organization where this application or proceeding is assigned is 571-273-8300.

Information regarding the status of an application may be obtained from the Patent Application Information Retrieval (PAIR) system. Status information for published applications may be obtained from either Private PAIR or Public PAIR. Status information for unpublished applications is available through Private PAIR only. For more information about the PAIR system, see http://pair-direct.uspto.gov. Should you have questions on access to the Private PAIR system, contact the Electronic Business Center (EBC) at 866-217-9197 (toll-free). If you would like assistance from a USPTO Customer Service Representative or access to the automated information system, call 800-786-9199 (IN USA OR CANADA) or 571-272-1000.

ROBERT HANCE
Primary Examiner
Art Unit 2421

/ROBERT HANCE/
Primary Examiner, Art Unit 2421

Notice of References Cited	Application/Control No. 14/657,359	Applicant(s)/Patent Under Reexamination TAKEHARA ET AL.	
	Examiner ROBERT HANCE	Art Unit 2421	Page 1 of 1

U.S. PATENT DOCUMENTS

*		Document Number Country Code-Number-Kind Code	Date MM-YYYY	Name	CPC Classification	US Classification
*	A	US-6,292,512 B1	09-2001	Radha; Hayder	H04N21/6377	375/240.05
*	B	US-6,697,426 B1	02-2004	Van Der Schaar; Mihaela	H04N19/61	375/240.01
*	C	US-2005/0172232 A1	08-2005	Wiseman, Richard M	H04L41/069	715/718
*	D	US-2007/0091997 A1	04-2007	Fogg; Chad	H04N19/56	375/240.1
	E	US-				
	F	US-				
	G	US-				
	H	US-				
	I	US-				
	J	US-				
	K	US-				
	L	US-				
	M	US-				

FOREIGN PATENT DOCUMENTS

*		Document Number Country Code-Number-Kind Code	Date MM-YYYY	Country	Name	CPC Classification
	N					
	O					
	P					
	Q					
	R					
	S					
	T					

NON-PATENT DOCUMENTS

*		Include as applicable: Author, Title Date, Publisher, Edition or Volume, Pertinent Pages)
	U	
	V	
	W	
	X	

*A copy of this reference is not being furnished with this Office action. (See MPEP § 707.05(a).)
Dates in MM-YYYY format are publication dates. Classifications may be US or foreign.

PTO/SB/08b (07-09)
Approved for use through 07/31/2012. OMB 0651-0031
U.S. Patent and Trademark Office; U.S. DEPARTMENT OF COMMERCE
Under the Paperwork Reduction Act of 1995, no persons are required to respond to a collection of information unless it contains a valid OMB control number.

Substitute for form 1449/PTO

INFORMATION DISCLOSURE STATEMENT BY APPLICANT

(Use as many sheets as necessary)

Sheet	1	of	1

Complete if Known	
Application Number	Not Yet Assigned
Filing Date	Currently Herewith
First Named Inventor	Hideki TAKEHARA
Art Unit	Not Yet Assigned
Examiner Name	Not Yet Assigned
Attorney Docket Number	119547-380321

U.S. PATENT DOCUMENTS

Examiner Initials*	Cite No.[1]	Document Number Number-Kind Code[2] (if known)	Publication Date MM-DD-YYYY	Name of Patentee or Applicant of Cited Document	Pages, Columns, Lines, Where Relevant Passages or Relevant Figures Appear

FOREIGN PATENT DOCUMENTS

Examiner Initials*	Cite No.[1]	Foreign Patent Document Country Code[3]-Number[4]-Kind Code[5] (if known)	Publication Date MM-DD-YYYY	Name of Patentee or Applicant of Cited Document	Pages, Columns, Lines, Where Relevant Passages Or Relevant Figures Appear	T[6]
	BA	JP-2005-303925-A	10-27-2005	Sharp Corp		√
	BB	JP-2008-199677-A	08-28-2008	Hitachi Ltd		√

NON PATENT LITERATURE DOCUMENTS

Examiner Initials*	Cite No.[1]	Include name of the author (in CAPITAL LETTERS), title of the article (when appropriate), title of the item (book, magazine, journal, serial, symposium, catalog, etc.), date, page(s), volume-issue number(s), publisher, city and/or country where published.	T[2]

Examiner Signature	/Robert Hance/	Date Considered	11/03/2016

*EXAMINER: Initial if reference considered, whether or not citation is in conformance with MPEP 609. Draw line through citation if not in conformance and not considered. Include copy of this form with next communication to applicant. * CITE NO.: Those application(s) which are marked with an single asterisk (*) next to the Cite No. are not supplied (under 37 CFR 1.98(a)(2)(iii)) because that application was filed after June 30, 2003 or is available in the IFW. [1] Applicant's unique citation designation number (optional). [2] See Kinds Codes of USPTO Patent Documents at www.uspto.gov or MPEP 901.04. [3] Enter Office that issued the document, by the two-letter code (WIPO Standard ST.3). [4] For Japanese patent documents, the indication of the year of the reign of the Emperor must precede the serial number of the patent document. [5] Kind of document by the appropriate symbols as indicated on the document under WIPO Standard ST.16 if possible. [6] Applicant is to place a check mark here if English language Translation is attached.

9302031-v1

ALL REFERENCES CONSIDERED EXCEPT WHERE LINED THROUGH. /R.H./

IN THE UNITED STATES PATENT AND TRADEMARK OFFICE

In re Patent Application of: Hideki TAKEHARA et al.	Art Unit: 2421
Application No: 14/657,359	Examiner: Robert J. Hance
Confirmation No: 3775	
Filed: March 13, 2015	Atty. Docket No: 119547.380321
For: VIDEO IMAGE CODING DATA TRANSMITTER, VIDEO IMAGE CODING DATA TRANSMISSION METHOD, VIDEO IMAGE CODING DATA RECEIVER, AND VIDEO IMAGE CODING DATA TRANSMISSION AND RECEPTION SYSTEM	Customer No: 26694 PATENT & TRADEMARK OFFICE

AMENDMENT IN RESPONSE TO NON-FINAL OFFICE ACTION UNDER 37 C.F.R. § 1.111

MS Amendment
Commissioner for Patents
P.O. Box 1450
Alexandria, VA 22313-1450

Dear Commissioner:

In response to the Non-Final Office Action dated November 10, 2016, please amend the above-identified U.S. patent application as follows:

Amendments to the Claims begin on page 2 of this paper.

Remarks begin on page 9 of this paper.

The Commissioner is authorized to charge any deficiency in any patent application processing fees pursuant to 37 C.F.R. § 1.17 associated with this communication, and to credit any excess payment, to Deposit Account No. 22-0261.

REMARKS

The Applicant thanks the Examiner for the careful consideration of this application. The Non-Final Office Action dated November 10, 2016 (hereinafter "Office Action") has been received and its contents carefully considered. Claims 1 and 4-11 are pending in this application. Claims 1 and 4-11 are currently amended. Claims 2 and 3 are newly canceled.

Based on the foregoing amendments and the following remarks, the Applicant respectfully requests that the Examiner reconsider all outstanding rejections and that they be withdrawn.

Priority

The Applicant thanks the Examiner for acknowledging receipt of papers submitted under 35 U.S.C. § 119(a)-(d), which have been placed of record in the file.

Drawings

The Applicant thanks the Examiner for acknowledging and accepting the drawings received on March 13, 2015.

Information Disclosure Statement

The Applicant thanks the Examiner for considering the Information Disclosure Statement submitted on March 13, 2015.

Claim Rejections under 35 U.S.C. § 112(b)

On page 2, the Office Action rejected claims 1-8 and 11 under 35 U.S.C. § 112(b) as being indefinite for failing to particularly point out and distinctly claim the subject matter which the inventor or a joint inventor regards as the invention. The Office Action indicates that these claims are rejected because the following features are described as "black box" style elements of a computing system without describing a specific structure for each element: "transmission rate acquisition unit," "transmission structure setting unit," "first transmission unit," "second transmission unit," "transmission control unit," and "video image coding data analysis unit" (claim 1); "receiving unit," "video image decoding unit," "second receiving unit," "basic video image coding data acquisition unit," and "video image coding data reconstruction unit" (claim 8); "video image coding data transmitter," "video image coding data receiver," and "second receiving unit" (claim 11).

The Applicant traverses this rejection. Nevertheless, solely to expedite prosecution, claims 1, 4-8, and 11 are amended. Support for the amendments to claims 1, 4-8, and 11 may be found, at least, for example, in paragraph [0031] of the original specification. Claims 2 and 3 are newly canceled.

The Applicant notes that the features "transmission rate acquisition unit," "transmission structure setting unit," "first transmission unit," "second transmission unit," "transmission control unit," and "video image coding data analysis unit" (claim 1); "receiving unit," "video image decoding unit," "second receiving unit," "basic video image coding data acquisition unit," and "video image coding data reconstruction unit" (claim 8); and "second receiving unit" (claim 11) are excluded from claims 1, 4-8, and 11.

The Applicant further notes that the features "video image coding data transmitter" and "video image coding data receiver" of amended claim 11 are not functional and should not be interpreted as means-plus function elements under 35 U.S.C. § 112 for the following two reasons. First, amended claim 11 discloses a sufficient structure of each of the features "video image coding data transmitter" and "video image coding data receiver." Second, according to *EnOcean GmbH v. Face Int'l Corp.*, the term "receiver" is not a means-plus-function term as it presumptively connotes sufficiently definite structure to those of skill in the art. *EnOcean GmbH v. Face Int'l Corp.*, 742 F.3d 955, 959 (Fed. Cir. 2014). Similarly, the term "transmitter" presumptively connotes sufficiently definite structure to those of skill in the art and should not be treated as a means-plus-function term.

In view of the foregoing amendments and remarks, the Applicant respectfully requests withdrawal of the rejection made under 35 U.S.C. § 112(b) with respect to amended claims 1-8 and 11.

Claim Interpretation under 35 U.S.C. § 112(f)

Beginning on pages 2-3, the Office Action indicates that claims 1-8 and 11 have been interpreted under pre-AIA 35 U.S.C. § 112, six paragraph. On page 2, the Office Action further indicates that the instant application is examined under the first-inventor-to-file provisions of the Leahy-Smith America Invents Act (AIA). Thus, so long as the present application is examined under the AIA provisions, not pre-AIA, the Applicant assumes that claims 1-8 and 11 have been interpreted under 35 U.S.C. § 112(f).

The Office Action further provides that the following features of claims 1-8 and 11 invoke the interpretation of 35 U.S.C. § 112(f), because the written description does not describe a sufficient structure of these features: "transmission rate acquisition unit," "transmission structure setting unit," "first transmission unit," "second transmission unit," "transmission control unit," and "video image coding data analysis unit" (claim 1); "receiving unit," "video image decoding unit," "second receiving unit," "basic video image coding data acquisition unit," and "video image coding data reconstruction unit" (claim 8); "video image coding data transmitter," "video image coding data receiver," and "second receiving unit" (claim 11).

The Applicant traverses this rejection. Nevertheless, solely to expedite prosecution, claims 1, 4-8, and 11 are amended. Claims 2 and 3 are newly canceled.

As indicated above, the features "transmission rate acquisition unit," "transmission structure setting unit," "first transmission unit," "second transmission unit," "transmission control unit," and "video image coding data analysis unit" (claim 1); "receiving unit," "video image decoding unit," "second receiving unit," "basic video image coding data acquisition unit," and "video image coding data reconstruction unit" (claim 8); and "second receiving unit" (claim 11) are excluded from claims 1, 4-8, and 11. The features "video image coding data transmitter" and "video image coding data receiver" of amended claim 11 are not functional based on disclosing sufficient structure and on the decision in *EnOcean GmbH v. Face Int'l Corp.* and, as such, should not invoke 35 U.S.C. § 112(f).

In view of the foregoing, the Applicant respectfully submits that no features of amended claims invoke 35 U.S.C. § 112(f) and require interpretation.

Claim Rejections under 35 U.S.C. § 102

On page 4, the Office Action rejected claims 1-3, 5, 9, and 10 under 35 U.S.C. § 102(a)(1) as being anticipated by U.S. Patent No. 6,292,512 to Radha et al. (hereinafter "Radha").

The Applicant traverses this rejection. Nevertheless, solely to expedite prosecution, claims 1, 5, 9, and 10 are amended. Support for the amendments to claims 1, 5, 9, and 10 may be found, at least, for example, in paragraphs [0023], [0062], [0063], [0066], and [0069] of the original specification. Claims 2 and 3 are newly canceled.

Claim 1

Radha fails to disclose:

> **wherein a period for setting the transmission structure is changed according to at least one of the number of pictures in the supplementary hierarchy stored in the memory unit and the transmission rate**

as recited by amended claim 1 (emphasis added).

Radha appears to describe certain aspects of a system for coding video data. Radha, Column 2, lines 36-40. Radha further appears to describe that the system for coding video data includes a calculation block 48 configured to determine a bit rate of a base layer based on a current bandwidth of a receiver. *Id.* at Column 6, lines 23-27. The calculation block 48 of Radha is also configured to set a value of bit rate of the base layer between certain measured values to ensure that a variable-bandwidth network 43 will be able to accommodate coded video data output. *Id.* at Column 6, lines 28-37. Radha further appears to describe that a bit rate of an enhancement layer is based on the bit rate of the base layer. *Id.* at Column 7, lines 40-43. On

pages 4 and 5, the Office Action appears to align the base layer of Radha with the claimed "basic hierarchy," the enhancement layer of Radha with the claimed "supplementary hierarchy," the bit rate of Radha with the claimed "transmission structure," and the measured bandwidth of Radha with the claimed "transmission rate." However, Radha does not describe that a period for setting the bit rate is changed according to at least one of the number of pictures in the enhancement layer stored in a memory unit and the measured bandwidth. Rather, Radha merely describes that the bit rate of the base layer is set based on the measured parameters and video data coding is performed at the bit rate. *Id.* at Column 6, lines 14-37. Nowhere does Radha disclose that a period for setting the bit rate can be changed.

Thus, Radha fails to disclose:

> wherein a period for setting the transmission structure is changed according to at least one of the number of pictures in the supplementary hierarchy stored in the memory unit and the transmission rate

as recited by amended claim 1.

In view of the foregoing amendments and remarks, the Applicant respectfully requests reconsideration and withdrawal of the rejection made under 35 U.S.C. § 102(a)(1) with respect to amended claim 1.

<u>Claim 5</u>

Claim 5 depends from claim 1 and is allowable as being dependent from an allowable claim.

Claim 9

Although of different scope than independent claim 1, the Applicant submits that independent claim 9 is also patentable for at least similar reasons as independent claim 1. For example, independent claim 9 recites, *inter alia*:

> wherein a period for acquiring the transmission rate is changed according to the number of pictures in the stored supplementary hierarchy.

The Applicant submits that at least the above features, recited by independent claim 9, are not disclosed by Radha for at least similar reasons as those discussed above identifying deficiencies in the applied reference with regard to independent claim 1.

Accordingly, the Applicant respectfully requests reconsideration and withdrawal of the rejection made under 35 U.S.C. § 102(a)(1) with respect to amended claim 9.

Claim 10

Although of different scope than independent claim 1, the Applicant submits that independent claim 10 is also patentable for at least similar reasons as independent claim 1. For example, independent claim 10 recites, *inter alia*:

> wherein a period for acquiring the transmission rate is changed according to the number of pictures in the stored supplementary hierarchy.

The Applicant submits that at least the above features, recited by independent claim 10, are not disclosed by Radha for at least similar reasons as those discussed above identifying deficiencies in the applied reference with regard to independent claim 1.

Accordingly, the Applicant respectfully requests reconsideration and withdrawal of the rejection made under 35 U.S.C. § 102(a)(1) with respect to amended claim 10.

Claim Rejections under 35 U.S.C. § 103

(A) On page 8, the Office Action rejected claim 4 under 35 U.S.C. § 103 as being unpatentable over Radha in view of U.S. Patent Application Publication No. 2005/0172232 to Wiseman et al. (hereinafter "Wiseman").

The Applicant traverses this rejection. Nevertheless, solely to expedite prosecution, claim 4 is currently amended. Support for the amendments to claim 4 may be found, at least, for example, in claim 1 and paragraphs [0023], [0062], [0063], [0066], and [0069] of the original specification.

No combination of Radha and Wiseman disclose:

> **wherein a period for acquiring the transmission rate is changed according to the number of pictures in the supplementary hierarchy stored in the memory unit**

as recited by amended claim 4 (emphasis added).

On page 8, the Office Action indicates that the feature "a period for acquiring the transmission rate is changed according to the transmission rate" is not known from Radha. The Applicant agrees that Radha does not disclose all features of claim 4. However, on page 8, the Office Action relies on Wiseman to cure the deficiency of Radha. The Applicant respectfully disagrees and notes that Wiseman does not disclose the feature "a period for acquiring the transmission rate is changed according to the number of pictures in the supplementary hierarchy stored in the memory unit," as recited by amended claim 4.

Wiseman appears to describe certain aspects of a system for providing a multi-modal interface. Wiseman, paragraph [0033]. The Office Action relies on paragraph [0097] of Wiseman

that appears to describe that a bandwidth of a network is calculated based on determining, at a server, start and stop times of each uploaded file. However, the Applicant notes that nowhere does Wiseman disclose that the period for acquiring the bandwidth can be changed according to the number of pictures in a supplementary hierarchy. Moreover, Wiseman fails to describe a supplementary hierarchy.

Thus, no combination of Radha and Wiseman disclose:

> wherein a period for acquiring the transmission rate is changed according to the number of pictures in the supplementary hierarchy stored in the memory unit

as recited by amended claim 4.

In view of the foregoing amendments and remarks, the Applicant respectfully requests reconsideration and withdrawal of the rejection made under 35 U.S.C. § 103 with respect to amended claim 4.

(B) On page 8, the Office Action rejected claim 6 under 35 U.S.C. § 103 as being unpatentable over Radha.

The Applicant traverses this rejection. Claim 6 depends from claim 1 and is allowable as being dependent from an allowable claim.

(C) On page 9, the Office Action rejected claim 7 under 35 U.S.C. § 103 as being unpatentable over Radha in view of U.S. Patent Application Publication No. 2007/0091997 to Fogg et al.

The Applicant traverses this rejection. Claim 7 depends from claim 1 and is allowable as being dependent from an allowable claim.

(D) On page 10, the Office Action rejected claims 8 and 11 under 35 U.S.C. § 103 as being unpatentable over Radha in view of U.S. Patent No. 6,697,426 to Van Der Schaar et al. (hereinafter "Van Der Schaar").

The Applicant traverses this rejection.

Claim 8

No combination of Radha and Van Der Schaar disclose:

> **receiving supplementary video image coding data including a supplementary hierarchical picture whose coding order and display order are earlier than those of a basic hierarchical picture included in the basic video image coding data;**
> **acquiring basic video image coding data received before supplementary video image coding data that has been received at the moment**

as recited by amended claim 8 (emphasis added).

On page 11, the Office Action indicates that Radha does not disclose the feature "receiving supplementary video image coding data including a supplementary hierarchical picture whose coding order and display order are earlier than those of a basic hierarchical picture included in the basic video image coding data" and the feature "acquiring basic video image coding data received before supplementary video image coding data that has been received at the moment." The Applicant agrees that Radha does not disclose all elements of claim 8. Rather, the Office Action relies on Van Der Schaar to cure deficiencies of Radha. The Applicant respectfully disagrees for the following reasons.

Van Der Schaar appears to describe certain aspects of a method for encoding video data and a method for decoding video data. Van Der Schaar, Column 2, lines 20-37. Figure 3 of Van Der Schaar appears to illustrate a diagram showing one example of the transmission and display order according to the present invention. *Id.*, Column 2, lines 47-49. Furthermore, Van Der Schaar appears to describe that "the transmission order of the enhancement frames has been rearranged to be the same as the display order of the enhancement frames on the decoder side." *Id.*, Column 3, lines 23-30. However, as shown in Figure 3, on the transmitter side, "the transmission order of the base layer frames is <u>different</u> than the enhancement layer frames." *Id.*, Column 3, lines 50-52 (emphasis added). Thus, as noted by the Applicant, it is either the coding order <u>or</u> display order is earlier than those of the basic hierarchical picture. In contrast, amended claim 8 requires that the supplementary hierarchical picture whose coding order <u>and</u> display order are earlier than those of a basic hierarchical picture included in the basic video image coding data. Moreover, nowhere does Van Der Schaar disclose the feature "acquiring basic video image coding data received before supplementary video image coding data that has been received at the moment."

Thus, no combination of Radha and Van Der Schaar disclose:

> receiving supplementary video image coding data including a supplementary hierarchical picture whose coding order and display order are earlier than those of a basic hierarchical picture included in the basic video image coding data;
>
> acquiring basic video image coding data received before supplementary video image coding data that has been received at the moment

as recited by amended claim 8.

In view of the foregoing amendments and remarks, the Applicant respectfully requests reconsideration and withdrawal of the rejection made under 35 U.S.C. § 103 with respect to amended claim 8.

Claim 11

Although of different scope than independent claim 8, the Applicant submits that independent claim 11 is also patentable for at least similar reasons as independent claim 8. For example, independent claim 11 recites, *inter alia*:

> receiving the supplementary video image coding data including a supplementary hierarchical picture having coding order and display order that are earlier than those of a basic hierarchical picture included in the basic video image coding data;
> acquiring basic video image coding data received before supplementary video image coding data that is currently received.

The Applicant submits that at least the above features, recited by independent claim 11, are not disclosed by Radha and Van Der Schaar for at least similar reasons as those discussed above identifying deficiencies in the applied reference with regard to independent claim 8.

Accordingly, the Applicant respectfully requests reconsideration and withdrawal of the rejection made under 35 U.S.C. § 103 with respect to amended claim 11.

Conclusion

All of the stated grounds of rejection have been properly traversed, accommodated, or rendered moot. The Applicant therefore respectfully requests that the Examiner reconsider all presently outstanding rejections and that they be withdrawn. The Applicant believes that a full and complete reply has been made to the outstanding Office Action and, as such, the present application is in condition for allowance. If the Examiner believes, for any reason, that personal communication will expedite prosecution of this application, the Examiner is hereby invited to telephone the undersigned at the number provided.

In view of the above amendment, the Applicant believes the pending application is in condition for allowance.

Dated: February 9, 2017

Respectfully submitted,

By: /Michael A. Sartori, Ph.D./

Michael A. Sartori, Ph.D.
Registration No.: 41,289
Ilya A. Svetlov, Ph.D.
Registration No.: 74,772
VENABLE LLP
P.O. Box 34385
Washington, DC 20043-9998
(202) 344-4000
(202) 344-8300 (Fax)
Attorney/Agent For Applicant

AMENDMENTS TO THE CLAIMS

Please amend the claims as follows:

1. (Currently Amended) A video image coding data transmitter comprising:

a processor; and

a memory unit having instructions stored which, when executed by the processor, cause the processor to perform operations comprising:

~~a transmission rate acquisition unit that acquires~~ acquiring the transmission rate of a network;

~~a transmission structure setting unit that sets~~ setting a transmission structure including a basic hierarchy and a supplementary hierarchy;

~~a first transmission unit that transmits~~ transmitting basic video image coding data of the basic hierarchy[[;]], wherein the [[a]] memory unit is further configured to store ~~that stores~~ supplementary video image coding data of the supplementary hierarchy;

~~a second transmission unit that transmits~~ transmitting the supplementary video image coding data stored in the memory unit; and

~~a transmission control unit that controls~~ controlling the ~~second~~ transmission ~~unit~~ of the supplementary video image coding data of the supplementary hierarchy according to the transmission rate,

wherein a period for setting the transmission structure is changed according to at least one of the number of pictures in the supplementary hierarchy stored in the memory unit and the transmission rate.

2. (Cancelled)

3. (Cancelled)

4. (Currently Amended) ~~The video image coding data transmitter according to claim 1,~~ A video image coding data transmitter comprising:

a processor; and

a memory unit having instructions stored which, when executed by the processor, cause the processor to perform operations comprising:

acquiring the transmission rate of a network;

setting a transmission structure including a basic hierarchy and a supplementary hierarchy;

transmitting basic video image coding data of the basic hierarchy, wherein the memory unit is further configured to store supplementary video image coding data of the supplementary hierarchy;

transmitting the supplementary video image coding data stored in the memory unit; and

controlling the transmission of the supplementary video image coding data according to the transmission rate,

wherein a period for acquiring the transmission rate ~~or a period for setting the transmission structure~~ is changed according to ~~at least one of~~ the number of pictures in the supplementary hierarchy stored in the memory unit ~~and the transmission rate~~.

5. (Currently Amended) The video image coding data transmitter according to claim 1,

wherein the memory unit is further configured to store instructions which, when executed by the processor, cause the processor to ~~the transmission structure setting unit sets~~ set a part of the area of a picture to represent the basic hierarchy and a part of the area other than the part representing the basic hierarchy to be the supplementary hierarchy.

6. (Currently Amended) The video image coding data transmitter according to claim 1,

wherein the memory unit is further configured to store instructions which, when executed by the processor, cause the processor to ~~the transmission structure setting unit sets~~ set a part of the syntax of the video image coding data to represent the basic hierarchy and a part of the syntax that is different from the part representing the basic hierarchy to represent the supplementary hierarchy.

7. (Currently Amended) The video image coding data transmitter according to claim 1,

wherein the memory unit is further configured to store instructions which, when executed by the processor, cause the processor to set ~~the transmission structure setting unit sets~~ a video image consisting of a luminance component to represent the basic hierarchy and a video image consisting of a color difference component to represent the supplementary hierarchy.

8. (Currently Amended) A video image coding data receiver comprising:

a processor; and

a memory unit having instructions stored which, when executed by the processor, cause the processor to perform operations comprising:

~~a first receiving unit that receives~~ receiving basic video image coding data;

~~a video image decoding unit that decodes~~ decoding the received basic video image coding data so as to reproduce a video image;

~~a second receiving unit that receives~~ receiving supplementary video image coding data including a supplementary hierarchical picture whose coding order and display order are earlier than those of a basic hierarchical picture included in the basic video image coding data;

~~a basic video image coding data acquisition unit that acquires~~ acquiring basic video image coding data received before supplementary video image coding data that has been received at the moment; and

~~a video image coding data reconstruction unit that reconstructs~~ reconstructing video image coding data from the basic video image coding data ~~acquired by the basic video image coding data acquisition unit~~ and the supplementary video image coding data ~~received by the second receiving unit~~.

9. (Currently Amended) A video image coding data transmission method comprising:

acquiring the transmission rate of a network;

setting a transmission structure including a basic hierarchy and a supplementary hierarchy;

transmitting basic video image coding data of the basic hierarchy;

storing supplementary video image coding data of the supplementary hierarchy;

transmitting the stored supplementary video image coding data; and

controlling the transmission according to the transmission rate,

wherein a period for acquiring the transmission rate is changed according to the number of pictures in the stored supplementary hierarchy.

10. (Currently Amended) A video image coding data transmission program embedded in a non-transitory computer readable recording medium that, when executed on a computer, implements:

acquiring the transmission rate of a network;

setting a transmission structure including a basic hierarchy and a supplementary hierarchy;

coding a video image based on the transmission structure into video image coding data including basic video image coding data of the basic hierarchy and supplementary video image coding data of the supplementary hierarchy;

transmitting basic video image coding data of the basic hierarchy;

storing supplementary video image coding data of the supplementary hierarchy;

transmitting the stored supplementary video image coding data; and

controlling the transmission according to the transmission rate,

wherein a period for acquiring the transmission rate is changed according to the number of pictures in the stored supplementary hierarchy.

11. (Currently Amended) A video image coding data transmission and reception system comprising:

a video image coding data transmitter that codes and transmits a video image; and

a video image coding data receiver that receives and reconstructs video image coding data,

wherein the video image coding data transmitter includes:

a first processor; and

a first memory unit having instructions stored which, when executed by the first processor, cause the first processor to perform operations comprising:

~~a transmission rate acquisition unit that acquires~~ acquiring the transmission rate of a network;

~~a transmission structure setting unit that sets~~ setting a transmission structure including a basic hierarchy and a supplementary hierarchy;

~~a first transmission unit that transmits~~ transmitting basic video image coding data of the basic hierarchy[[;]], wherein the first [[a]] memory unit is further configured to store ~~that stores~~ supplementary video image coding data of the supplementary hierarchy;

~~a second transmission unit that transmits~~ transmitting the supplementary video image coding data stored in the memory unit; and

~~a transmission control unit that controls~~ controlling the ~~second~~ transmission ~~unit~~ of the supplementary video image coding data according to the transmission rate, and

wherein the video image coding data receiver includes:

a second processor; and

a second memory unit having instructions stored which, when executed by the second processor, cause the second processor to perform operations comprising:

~~a first receiving unit that receives~~ receiving the basic video image coding data;

~~a video image decoding unit that decodes~~ decoding the received basic video image coding data so as to reproduce a video image;

~~a second receiving unit that receives~~ receiving the supplementary video image coding data including a supplementary hierarchical picture having coding order and display order that are earlier than those of a basic hierarchical picture included in the basic video image coding data;

~~a basic video image coding data acquisition unit that acquires~~ acquiring basic video image coding data received before supplementary video image coding data that is currently received; and

~~a video image coding data reconstruction unit that reconstructs~~ reconstructing video image coding data from the basic video image coding data ~~acquired by the basic video image coding data acquisition unit~~ and the supplementary video image coding data ~~received by the second receiving unit~~.

UNITED STATES PATENT AND TRADEMARK OFFICE

UNITED STATES DEPARTMENT OF COMMERCE
United States Patent and Trademark Office
Address: COMMISSIONER FOR PATENTS
P.O. Box 1450
Alexandria, Virginia 22313-1450
www.uspto.gov

APPLICATION NO.	FILING DATE	FIRST NAMED INVENTOR	ATTORNEY DOCKET NO.	CONFIRMATION NO.
14/657,359	03/13/2015	Hideki TAKEHARA	119547-380321	3775

26694 7590 03/02/2017
VENABLE LLP
P.O. BOX 34385
WASHINGTON, DC 20043-9998

EXAMINER
HANCE, ROBERT J

ART UNIT	PAPER NUMBER
2423	

NOTIFICATION DATE	DELIVERY MODE
03/02/2017	ELECTRONIC

Please find below and/or attached an Office communication concerning this application or proceeding.

The time period for reply, if any, is set in the attached communication.

Notice of the Office communication was sent electronically on above-indicated "Notification Date" to the following e-mail address(es):

PTOMail@Venable.com
cavanhouten@venable.com

Office Action Summary	Application No. 14/657,359	Applicant(s) TAKEHARA ET AL.	
	Examiner ROBERT HANCE	Art Unit 2423	AIA (First Inventor to File) Status Yes

-- The MAILING DATE of this communication appears on the cover sheet with the correspondence address --

Period for Reply

A SHORTENED STATUTORY PERIOD FOR REPLY IS SET TO EXPIRE 3 MONTHS FROM THE MAILING DATE OF THIS COMMUNICATION.

- Extensions of time may be available under the provisions of 37 CFR 1.136(a). In no event, however, may a reply be timely filed after SIX (6) MONTHS from the mailing date of this communication.
- If NO period for reply is specified above, the maximum statutory period will apply and will expire SIX (6) MONTHS from the mailing date of this communication.
- Failure to reply within the set or extended period for reply will, by statute, cause the application to become ABANDONED (35 U.S.C. § 133). Any reply received by the Office later than three months after the mailing date of this communication, even if timely filed, may reduce any earned patent term adjustment. See 37 CFR 1.704(b).

Status

1)☒ Responsive to communication(s) filed on 2/9/17.

☐ A declaration(s)/affidavit(s) under **37 CFR 1.130(b)** was/were filed on _____.

2a)☒ This action is **FINAL**. 2b)☐ This action is non-final.

3)☐ An election was made by the applicant in response to a restriction requirement set forth during the interview on _____; the restriction requirement and election have been incorporated into this action.

4)☐ Since this application is in condition for allowance except for formal matters, prosecution as to the merits is closed in accordance with the practice under *Ex parte Quayle*, 1935 C.D. 11, 453 O.G. 213.

Disposition of Claims*

5)☒ Claim(s) 1 and 4-11 is/are pending in the application.

5a) Of the above claim(s) _____ is/are withdrawn from consideration.

6)☐ Claim(s) _____ is/are allowed.

7)☒ Claim(s) 1 and 4-11 is/are rejected.

8)☐ Claim(s) _____ is/are objected to.

9)☐ Claim(s) _____ are subject to restriction and/or election requirement.

* If any claims have been determined allowable, you may be eligible to benefit from the **Patent Prosecution Highway** program at a participating intellectual property office for the corresponding application. For more information, please see http://www.uspto.gov/patents/init_events/pph/index.jsp or send an inquiry to PPHfeedback@uspto.gov.

Application Papers

10)☐ The specification is objected to by the Examiner.

11)☐ The drawing(s) filed on _____ is/are: a)☐ accepted or b)☐ objected to by the Examiner.

Applicant may not request that any objection to the drawing(s) be held in abeyance. See 37 CFR 1.85(a).

Replacement drawing sheet(s) including the correction is required if the drawing(s) is objected to. See 37 CFR 1.121(d).

Priority under 35 U.S.C. § 119

12)☐ Acknowledgment is made of a claim for foreign priority under 35 U.S.C. § 119(a)-(d) or (f).

Certified copies:

a)☐ All b)☐ Some** c)☐ None of the:

1.☐ Certified copies of the priority documents have been received.

2.☐ Certified copies of the priority documents have been received in Application No. _____.

3.☐ Copies of the certified copies of the priority documents have been received in this National Stage application from the International Bureau (PCT Rule 17.2(a)).

** See the attached detailed Office action for a list of the certified copies not received.

Attachment(s)

1) ☒ Notice of References Cited (PTO-892)

2) ☐ Information Disclosure Statement(s) (PTO/SB/08a and/or PTO/SB/08b) Paper No(s)/Mail Date _____.

3) ☐ Interview Summary (PTO-413) Paper No(s)/Mail Date. _____ .

4) ☐ Other: _____.

DETAILED ACTION

1. The present application, filed on or after March 16, 2013, is being examined under the first inventor to file provisions of the AIA.

Response to Arguments

2. Applicant's arguments filed 02/09/2017 have been fully considered but they are not persuasive.

Applicant argues on pages 18-19 of the Remarks that the Van Der Schaar reference fails to disclose that the coding order and display order of the supplemental pictures are earlier than those of the basic picture. Applicant also argues that the reference does not disclose “acquiring basic video image coding data received before the supplementary video image coding data that has been received in the moment.” The examiner respectfully disagrees. Fig. 3 of Van Der Schaar shows that basic picture P3 and enhancement (supplemental) picture E2 are received together. Picture E2 is earlier in coding order and display order than P3, as is shown in the top portion of Fig. 3. This shows that the coding order and display order of the enhancement picture are earlier than that of the base picture.

Further, Van Der Schaar discloses later receiving image E3, which depends on previously-received base layer image P3. Therefore to properly decode E3, the system will acquire image P3, which is therefore "received before the supplementary video image coding data that has been received in the moment.”

Applicant's remaining arguments have been considered but are moot in view of the new grounds of rejection below.

Applicant did not traverse the assertion of official notice given in the rejection of claim 6, rendering this subject matter admitted prior art.

Claim Rejections - 35 USC § 103

3. The following is a quotation of 35 U.S.C. 103 which forms the basis for all obviousness rejections set forth in this Office action:

> A patent for a claimed invention may not be obtained, notwithstanding that the claimed invention is not identically disclosed as set forth in section 102, if the differences between the claimed invention and the prior art are such that the claimed invention as a whole would have been obvious before the effective filing date of the claimed invention to a person having ordinary skill in the art to which the claimed invention pertains. Patentability shall not be negated by the manner in which the invention was made.

4. Claims 1, 4, 5, 9, and 10 are rejected under 35 U.S.C. 103 as being unpatentable over Radha in view of Myers et al., US Pub No. 2011/0082945.

As to claim 1 Radha discloses a video image coding data transmitter comprising: a processor and a memory unit having instructions stored which, when executed by the processor, cause the processor to perform operations comprising:

acquiring the transmission rate of a network (**Fig. 6: 48; col. 6 lines 28-38**);

setting a transmission structure including a basic hierarchy and a supplementary hierarchy (**Fig. 6: 48; col. 6 lines 28-38; col. 7 lines 34-46; Fig. 10 – the bit-rate of the base layer (basic hierarchy) and enhancement layer (supplementary hierarchy) are set based on measured bandwidth, thus setting the transmission structure**);

transmitting basic video image coding data of the basic hierarchy (**Fig. 6: 55; col. 8 lines 15-47**); wherein the memory unit is further configured to store supplementary video image coding data of the supplementary hierarchy; transmitting the supplementary video image coding data stored in the memory unit; and controlling the transmission of the supplementary video image coding data of the supplementary hierarchy according to the transmission rate (**Fig. 6: 54; col. 7 line 38 – col. 8 line 47; Fig. 10 and its description – a plurality of enhancement layers are produced (for example by DCT, inherently involving storage in memory), and the data sent is chosen based on the measured bandwidth**).

Radha fails to disclose that a period for setting the transmission structure is changed according to at least one of the number of pictures in the supplementary hierarchy stored in the memory and the transmission rate.

However, in an analogous art, Myers discloses that a period for setting a transmission structure is changed according to a transmission rate (**[0130]-[0131] – bandwidth is re-measured after each chunk of data is delivered, and the amount of enhancement data (the transmission structure) is adjusted accordingly. Therefore the period for which the transmission structure is set will vary based on how often bandwidth is re-measured, which depends on the transmission rate**).

It would have been obvious to a skilled artisan at the time of the invention to modify the system of Radha with the teachings of Myers, the rationale being to ensure accurate and up-to-date bandwidth measurements.

As to claim 4 see rejection of claim 1. The combined system of Radha and Myers further discloses that a period for acquiring the transmission rate is changed according to the number of pictures in the supplemental hierarchy stored in the memory unit (**Myers [0130]-[0131] – bandwidth is measured (transmission rate is acquired) based on the last chunk of video data delivered. As the delivered chunks contain enhancement layers (see Fig. 5 and [0090]), the time required to deliver these chunks will vary depending on the number of images stored in a transmission buffer (Fig. 2) and delivered to the viewer**).

As to claim 5 Radha discloses the video image coding data transmitter according to claim 1, wherein the memory unit is further configured to store instructions which, when executed by the processor, cause the processor to set a part of the area of a picture to represent the basic hierarchy and a part of the area other than the part representing the basic hierarchy to be the supplementary hierarchy (**col. 1 lines 20-35 and lines 56-63 – the residual data in the enhancement layer corresponds to data not present in the base layer, therefore is part of the area other than that represented by the base layer**).

As to claim 9 see rejection of claims 1 and 4.

As to claim 10 the combined system of Radha and Myers, as presented above, discloses a video image coding data transmission program embedded in a non-transitory computer readable recording medium that, when executed on a computer, implements:

acquiring the transmission rate of a network (**Radha Fig. 6: 48; col. 6 lines 28-38**);

setting a transmission structure including a basic hierarchy and a supplementary hierarchy (**Radha Fig. 6: 48; col. 6 lines 28-38; col. 7 lines 34-46; Fig. 10 – the bit-rate of the base layer (basic hierarchy) and enhancement layer (supplementary hierarchy) are set based on measured bandwidth, thus setting the transmission structure**);

coding a video image based on the transmission structure into video image coding data including basic video image coding data of the basic hierarchy and supplementary video image coding data of the supplementary hierarchy (**Radha Fig. 7: S702 – S704 and their description**);

transmitting basic video image coding data of the basic hierarchy (**Radha Fig. 6: 55; col. 8 lines 15-47**);

storing supplementary video image coding data of the supplementary hierarchy; transmitting the stored supplementary video image coding data; and controlling the transmission according to the transmission rate (**Radha Fig. 6: 54; col. 7 line 38 – col. 8 line 47; Fig. 10 and its description – a plurality of enhancement layers are**

produced (for example by DCT, inherently involving storage in memory), and the data sent is chosen based on the measured bandwidth),

wherein a period for acquiring the transmission rate is changed according to the number of pictures in the stored supplemental hierarchy (**Myers [0130]-[0131] – bandwidth is measured, or transmission rate is acquired, based on the last chunk delivered. As the delivered chunks contain enhancement layers (see Fig. 5 and [0090]), the time required to deliver these chunks will vary depending on the number of images stored in a transmission buffer (Fig. 2) and delivered to the viewer**).

5. Claim 6 is rejected under 35 U.S.C. 103 as being unpatentable over Radha in view of Myers, and further in view of Applicant's Admitted Prior Art (AAPA).

As to claim 6 Radha fails to explicitly disclose the video image coding data transmitter according to claim 1, wherein the transmission structure setting unit sets a part of the syntax of the video image coding data to represent the basic hierarchy and a part of the syntax that is different from the part representing the basic hierarchy to represent the supplementary hierarchy.

However, AAPA discloses that this was well known in the art at the time of the invention (see Remarks, filed 02/09/2017, Applicant's failure to traverse the previous assertion of official notice). Therefore it would have been obvious to a skilled artisan to

modify the system of Radha to include this, the rationale being to ensure proper decoding by the receiver.

1. Claim 7 is rejected under 35 U.S.C. 103 as being unpatentable over Radha and Myers, as applied above, and further in view of Fogg.

As to claim 7 Radha and Myers fails to disclose the video image coding data transmitter according to claim 1, wherein the transmission structure setting unit sets a video image consisting of a luminance component to represent the basic hierarchy and a video image consisting of a color difference component to represent the supplementary hierarchy.

However, in an analogous art, Fogg discloses setting a video image consisting of a luminance component to represent a basic hierarchy and a video image consisting of a color difference component to represent a supplementary hierarchy (**[0044] – luminance data is carried in the base layer (basic hierarchy) while chrominance is carried in the enhancement layer**).

It would have been obvious to a skilled artisan at the time of the invention to modify the system of Radha and Myers with the teachings of Fogg, the rationale being to enable high-quality (although monochromatic) images during periods of reduced bandwidth.

2. Claims 8 and 11 are rejected under 35 U.S.C. 103 as being unpatentable over Radha in view of Van Der Schaar et al., US Patent No. 6,697,426.

As to claim 8 Radha discloses a video image coding data receiver comprising: a processor and a memory unit having instructions stored which, when executed by the processor, cause the processor to perform operations comprising:

receiving basic video image coding data (**Fig. 9: 60**);

decoding the received basic video image coding data so as to reproduce a video image (**Fig. 9: 58**);

receiving supplementary video image coding data including a supplementary hierarchical picture (**Fig. 9: 59**);

acquiring basic video image coding data (**Fig. 9: 60**); and

reconstructing video image coding data from the basic video image coding data and the supplementary video image coding data (**Fig. 9: 60; col. 8 lines 48-67**).

Radha fails to disclose receiving supplementary video image coding data whose coding order and display order are earlier than those of a basic hierarchical picture included in the basic video image coding data; and acquiring basic video image coding data received before supplementary video image coding data that has been received at the moment.

However, in an analogous art, Van Der Schaar discloses receiving supplementary video image coding data whose coding order and display order are earlier than those of a basic hierarchical picture included in the basic video image

coding data; and acquiring basic video image coding data received before supplementary video image coding data that has been received at the moment (**Fig. 3; col. 2 line 65 – col. 3 line 65**).

It would have been obvious to a skilled artisan at the time of the invention to modify the system of Radha with the teachings of Van Der Schaar, the rationale being to reduce memory requirements in the receiving device.

As to claim 11 see rejection of claims 1 and 8.

Conclusion

6. Applicant's amendment necessitated the new ground(s) of rejection presented in this Office action. Accordingly, **THIS ACTION IS MADE FINAL**. See MPEP § 706.07(a). Applicant is reminded of the extension of time policy as set forth in 37 CFR 1.136(a).

A shortened statutory period for reply to this final action is set to expire THREE MONTHS from the mailing date of this action. In the event a first reply is filed within TWO MONTHS of the mailing date of this final action and the advisory action is not mailed until after the end of the THREE-MONTH shortened statutory period, then the shortened statutory period will expire on the date the advisory action is mailed, and any extension fee pursuant to 37 CFR 1.136(a) will be calculated from the mailing date of the advisory action. In no event, however, will the statutory period for reply expire later than SIX MONTHS from the date of this final action.

Any inquiry concerning this communication or earlier communications from the examiner should be directed to ROBERT HANCE whose telephone number is (571)270-5319. The examiner can normally be reached on M-F 8:00-5:00.

Examiner interviews are available via telephone, in-person, and video conferencing using a USPTO supplied web-based collaboration tool. To schedule an interview, applicant is encouraged to use the USPTO Automated Interview Request (AIR) at http://www.uspto.gov/interviewpractice.

If attempts to reach the examiner by telephone are unsuccessful, the examiner's supervisor, Benjamin Bruckart can be reached on (571) 272-3982. The fax phone number for the organization where this application or proceeding is assigned is 571-273-8300.

Information regarding the status of an application may be obtained from the Patent Application Information Retrieval (PAIR) system. Status information for published applications may be obtained from either Private PAIR or Public PAIR. Status information for unpublished applications is available through Private PAIR only. For more information about the PAIR system, see http://pair-direct.uspto.gov. Should you have questions on access to the Private PAIR system, contact the Electronic Business Center (EBC) at 866-217-9197 (toll-free). If you would like assistance from a USPTO Customer Service Representative or access to the automated information system, call 800-786-9199 (IN USA OR CANADA) or 571-272-1000.

ROBERT HANCE
Primary Examiner
Art Unit 2423

/ROBERT HANCE/
Primary Examiner, Art Unit 2423

Notice of References Cited	Application/Control No. 14/657,359	Applicant(s)/Patent Under Reexamination TAKEHARA ET AL.	
	Examiner ROBERT HANCE	Art Unit 2423	Page 1 of 1

U.S. PATENT DOCUMENTS

*		Document Number Country Code-Number-Kind Code	Date MM-YYYY	Name	CPC Classification	US Classification
*	A	US-2011/0082945 A1	04-2011	Myers; Robert Linwood	H04N21/234327	709/231
	B	US-				
	C	US-				
	D	US-				
	E	US-				
	F	US-				
	G	US-				
	H	US-				
	I	US-				
	J	US-				
	K	US-				
	L	US-				
	M	US-				

FOREIGN PATENT DOCUMENTS

*		Document Number Country Code-Number-Kind Code	Date MM-YYYY	Country	Name	CPC Classification
	N					
	O					
	P					
	Q					
	R					
	S					
	T					

NON-PATENT DOCUMENTS

*		Include as applicable: Author, Title Date, Publisher, Edition or Volume, Pertinent Pages)
	U	
	V	
	W	
	X	

*A copy of this reference is not being furnished with this Office action. (See MPEP § 707.05(a).)
Dates in MM-YYYY format are publication dates. Classifications may be US or foreign.

PTO/SB/30 (07-14)
Approved for use through 07/31/2016 OMB 0651-0031
U.S. Patent and Trademark Office; U.S. DEPARTMENT OF COMMERCE
Under the Paperwork Reduction Act of 1995, no persons are required to respond to a collection of information unless it contains a valid OMB control number.

Request for Continued Examination (RCE) Transmittal		
Address to: Mail Stop RCE, Commissioner for Patents, P.O. Box 1450, Alexandria, VA 22313-1450	Application Number	14/657,359-Conf. #3775
	Filing Date	March 13, 2015
	First Named Inventor	Hideki Takehara
	Art Unit	2421
	Examiner Name	R. J. Hance
	Attorney Docket Number	119547.380321

This is a Request for Continued Examination (RCE) under 37 CFR 1.114 of the above-identified application.

Request for Continued Examination (RCE) practice under 37 CFR 1.114 does not apply to any utility or plant application filed prior to June 8, 1995, to any international application that does not comply with the requirements of 35 U.S.C 371, or to any design application. See Instruction Sheet for RCEs (not to be submitted to the USPTO on page 2.)

1. Submission required under 37 CFR 1.114 Note: If the RCE is proper, any previously filed unentered amendments and amendments enclosed with the RCE will be entered in the order in which they were filed unless applicant instructs otherwise. If applicant does not wish to have any previously filed unentered amendment(s) entered, applicant must request non-entry of such amendment(s).
   - a. [ ] Previously submitted. If a final Office action is outstanding, any amendments filed after the final Office action may be considered as a submission even if this box is not checked.
     - i. [ ] Consider the arguments in the Appeal Brief or Reply Brief previously filed on _____
     - ii. [ ] Other _____
   - b. [X] Enclosed
     - i. [X] Amendment/Reply
     - ii. [ ] Affidavit(s)/ Declaration(s)
     - iii. [ ] Information Disclosure Statement (IDS)
     - iv. [ ] Other _____
2. Miscellaneous
   - a. [ ] Suspension of action on the above-identified application is requested under 37 CFR 1.103(c) for a period of _____ months. (Period of suspension shall not exceed 3 months; Fee under 37 CFR 1.17(i) required)
   - b. [ ] Other _____
3. Fees The RCE fee under 37 CFR 1.17(e) is required by 37 CFR 1.114 when the RCE is filed.
   - a. [X] The Director is hereby authorized to charge the following fees, any underpayment of fees, or credit any overpayments, to Deposit Account No. 22-0261 .
     - i. [X] RCE fee required under 37 CFR 1.17(e)
     - ii. [ ] Extension of time fee (37 CFR 1.136 and 1.17)
     - iii. [ ] Other _____
   - b. [ ] Check in the amount of $ _____ enclosed
   - c. [ ] Payment by credit card (Form PTO-2038 enclosed)

WARNING: Information on this form may become public. Credit card information should not be included on this form. Provide credit card information and authorization on PTO-2038.

SIGNATURE OF APPLICANT, ATTORNEY, OR AGENT REQUIRED			
Signature	/Michael A. Sartori, Ph.D./	Date	May 8, 2017
Name (Print/Type)	Michael A. Sartori, Ph.D.	Registration No.	41,289

CERTIFICATE OF MAILING OR TRANSMISSION			
I hereby certify that this correspondence is being deposited with the United States Postal Service with sufficient postage as first class mail in an envelope addressed to: Mail Stop RCE, Commissioner for Patents, P. O. Box 1450, Alexandria, VA 22313-1450 or facsimile transmitted to the U.S. Patent and Trademark Office on the date shown below.			
Signature			
Name (Print/Type)		Date	

IN THE UNITED STATES PATENT AND TRADEMARK OFFICE

In re Patent Application of: Hideki TAKEHARA et al.	Art Unit: 2421
Application No: 14/657,359	Examiner: Robert J. Hance
Confirmation No: 3775	
Filed: March 13, 2015	Atty. Docket No: 119547.380321
For: VIDEO IMAGE CODING DATA TRANSMITTER, VIDEO IMAGE CODING DATA TRANSMISSION METHOD, VIDEO IMAGE CODING DATA RECEIVER, AND VIDEO IMAGE CODING DATA TRANSMISSION AND RECEPTION SYSTEM	Customer No: 26694 PATENT & TRADEMARK OFFICE

AMENDMENT AND REQUEST FOR CONTINUED EXAMINATION

UNDER 37 C.F.R. § 1.114

MS Amendment
Commissioner for Patents
P.O. Box 1450
Alexandria, VA 22313-1450

Dear Commissioner:

In response to the Office Action dated March 2, 2017, please amend the above-identified U.S. patent application as follows:

Amendments to the Claims begin on page 2 of this paper.

Remarks begin on page 10 of this paper.

A Request for Continued Examination (RCE) is submitted with this response.

The Commissioner is authorized to charge any deficiency in any patent application processing fees pursuant to 37 C.F.R. § 1.17 associated with this communication, and to credit any excess payment, to Deposit Account No. 22-0261.

AMENDMENTS TO THE CLAIMS

Please amend the claims as follows:

1. (Currently Amended) A video image coding data transmitter comprising:

a processor; and

a memory unit having instructions stored which, when executed by the processor, cause the processor to perform operations comprising:

acquiring the transmission rate of a network;

setting a transmission structure including a basic hierarchy and a supplementary hierarchy;

transmitting basic video image coding data of the basic hierarchy, wherein the memory unit is further configured to store supplementary video image coding data of the supplementary hierarchy <u>and output the supplementary video image coding data of the supplementary hierarchy in storing order</u>;

transmitting the supplementary video image coding data stored in the memory unit; and

controlling the transmission of the supplementary video image coding data of the supplementary hierarchy according to the transmission rate,

wherein a period for setting the transmission structure is changed according to at least one of the number of pictures in the supplementary hierarchy stored in the memory unit and the transmission rate<u>,</u>

<u>wherein the controlling the transmission controls the transmitting the supplementary video image coding data to transmit the supplementary video image coding data of the</u>

supplementary hierarchy, when the transmission rate is larger than a reference transmission rate at which all pictures are coded in the basic hierarchy.

2. (Cancelled)

3. (Cancelled)

4. (Currently Amended) A video image coding data transmitter comprising:

a processor; and

a memory unit having instructions stored which, when executed by the processor, cause the processor to perform operations comprising:

acquiring the transmission rate of a network;

setting a transmission structure including a basic hierarchy and a supplementary hierarchy;

transmitting basic video image coding data of the basic hierarchy, wherein the memory unit is further configured to store supplementary video image coding data of the supplementary hierarchy and output the supplementary video image coding data of the supplementary hierarchy in storing order;

transmitting the supplementary video image coding data stored in the memory unit; and

controlling the transmission of the supplementary video image coding data according to the transmission rate,

wherein a period for acquiring the transmission rate is changed according to the number of pictures in the supplementary hierarchy stored in the memory unit,

wherein setting the transmission structure sets the proportion of basic hierarchical pictures to supplementary hierarchical pictures such that the ratio of the basic hierarchical pictures is increased as the transmission rate becomes larger and the ratio of the supplementary hierarchical pictures is increased as the transmission rate becomes smaller,

wherein controlling the transmission controls the transmitting the supplementary video image coding data to transmit the supplementary video image coding data of the supplementary hierarchy, when the transmission rate is larger than a reference transmission rate at which all pictures are coded in the basic hierarchy.

5. (Previously Presented) The video image coding data transmitter according to claim 1,

wherein the memory unit is further configured to store instructions which, when executed by the processor, cause the processor to set a part of the area of a picture to represent the basic hierarchy and a part of the area other than the part representing the basic hierarchy to be the supplementary hierarchy.

6. (Previously Presented) The video image coding data transmitter according to claim 1,

wherein the memory unit is further configured to store instructions which, when executed by the processor, cause the processor to set a part of the syntax of the video image coding data to represent the basic hierarchy and a part of the syntax that is different from the part representing the basic hierarchy to represent the supplementary hierarchy.

7. (Previously Presented) The video image coding data transmitter according to claim 1,

wherein the memory unit is further configured to store instructions which, when executed by the processor, cause the processor to set a video image consisting of a luminance component to represent the basic hierarchy and a video image consisting of a color difference component to represent the supplementary hierarchy.

8. (Previously Presented) A video image coding data receiver comprising:

a processor; and

a memory unit having instructions stored which, when executed by the processor, cause the processor to perform operations comprising:

receiving basic video image coding data;

decoding the received basic video image coding data so as to reproduce a video image;

receiving supplementary video image coding data including a supplementary hierarchical picture whose coding order and display order are earlier than those of a basic hierarchical picture included in the basic video image coding data;

acquiring basic video image coding data received before supplementary video image coding data that has been received at the moment; and

reconstructing video image coding data from the basic video image coding data and the supplementary video image coding data.

9. (Currently Amended) A video image coding data transmission method comprising:

acquiring the transmission rate of a network;

setting a transmission structure including a basic hierarchy and a supplementary hierarchy;

transmitting basic video image coding data of the basic hierarchy;

storing supplementary video image coding data of the supplementary hierarchy and outputting the supplementary video image coding data of the supplementary hierarchy in storing order;

transmitting the stored supplementary video image coding data; and

controlling the transmission according to the transmission rate,

wherein a period for acquiring the transmission rate is changed according to the number of pictures in the stored supplementary hierarchy,

wherein the setting a transmission structure sets the proportion of basic hierarchical pictures to supplementary hierarchical pictures such that the ratio of the basic hierarchical pictures is increased as the transmission rate becomes larger and the ratio of the supplementary hierarchical pictures is increased as the transmission rate becomes smaller,

wherein the controlling the transmission controls the transmitting the stored supplementary video image coding data to transmit the supplementary video image coding data of the supplementary hierarchy, when the transmission rate is larger than a reference transmission rate at which all pictures are coded in the basic hierarchy.

10. (Currently Amended) A video image coding data transmission program embedded in a non-transitory computer readable recording medium that, when executed on a computer, implements:

acquiring the transmission rate of a network;

setting a transmission structure including a basic hierarchy and a supplementary hierarchy;

coding a video image based on the transmission structure into video image coding data including basic video image coding data of the basic hierarchy and supplementary video image coding data of the supplementary hierarchy;

transmitting basic video image coding data of the basic hierarchy;

storing supplementary video image coding data of the supplementary hierarchy <u>and outputting the supplementary video image coding data of the supplementary hierarchy in storing order</u>;

transmitting the stored supplementary video image coding data; and

controlling the transmission according to the transmission rate,

wherein a period for acquiring the transmission rate is changed according to the number of pictures in the stored supplementary hierarchy<u>,</u>

<u>wherein the setting a transmission structure sets the proportion of basic hierarchical pictures to supplementary hierarchical pictures such that the ratio of the basic hierarchical pictures is increased as the transmission rate becomes larger and the ratio of the supplementary hierarchical pictures is increased as the transmission rate becomes smaller,</u>

wherein the controlling the transmission controls the transmitting the stored supplementary video image coding data to transmit the supplementary video image coding data of the supplementary hierarchy, when the transmission rate is larger than a reference transmission rate at which all pictures are coded in the basic hierarchy.

11. (Previously Presented) A video image coding data transmission and reception system comprising:

a video image coding data transmitter that codes and transmits a video image; and

a video image coding data receiver that receives and reconstructs video image coding data,

wherein the video image coding data transmitter includes:

a first processor; and

a first memory unit having instructions stored which, when executed by the first processor, cause the first processor to perform operations comprising:

acquiring the transmission rate of a network;

setting a transmission structure including a basic hierarchy and a supplementary hierarchy;

transmitting basic video image coding data of the basic hierarchy, wherein the first memory unit is further configured to store supplementary video image coding data of the supplementary hierarchy;

transmitting the supplementary video image coding data stored in the memory unit; and

controlling the transmission of the supplementary video image coding data according to the transmission rate, and

wherein the video image coding data receiver includes:

a second processor; and

a second memory unit having instructions stored which, when executed by the second processor, cause the second processor to perform operations comprising:

receiving the basic video image coding data;

decoding the received basic video image coding data so as to reproduce a video image;

receiving the supplementary video image coding data including a supplementary hierarchical picture having coding order and display order that are earlier than those of a basic hierarchical picture included in the basic video image coding data;

acquiring basic video image coding data received before supplementary video image coding data that is currently received; and

reconstructing video image coding data from the basic video image coding data and the supplementary video image coding data.

REMARKS

The Applicant thanks the Examiner for the careful consideration of this application. The Office Action dated March 2, 2017 has been received and its contents carefully considered. Claims 1 and 4-11 are pending in this application. Claims 1, 4, 9 and 10 are amended. Support for the amendments may be found, at least, for example, in paragraphs [0038], [0058], and [0059] of the original specification. Claims 2-3 were previously canceled.

Based on the foregoing amendments and the following remarks, the Applicant respectfully requests that the Examiner reconsider all outstanding rejections and that they be withdrawn.

Claim Rejections under 35 U.S.C. § 103

(A) On page 3, the Office Action rejected claims 1, 4, 5, 9, and 10 under 35 U.S.C. § 103(a) as being unpatentable over U.S. Patent No. 6,292,512 to Radha et al. (hereinafter "Radha") in view of U.S. Patent Application Publication No. 2011/0082945 to Myers et al. ("Myers"). The Applicant traverses this rejection for at least the following reasons.

As per claim 1, the combination of Radha and Myers fails to disclose "wherein the controlling the transmission controls the transmitting the supplementary video image coding data to transmit the supplementary video image coding data of the supplementary hierarchy, **when the transmission rate is larger than a reference transmission rate at which all pictures are coded in the basic hierarchy**," as recited in amended claim 1. Radha and Myers are silent as to controlling transmission when a transmission rate is larger than a reference transmission rate at

which all pictures are coded in a basic hierarchy. As such, claim 1 is allowable over Radha and Myers.

Although of different scope than claim 1, claim 4 is allowable for similar reasons. In particular, claim 4 recites "wherein controlling the transmission controls the transmitting the supplementary video image coding data to transmit the supplementary video image coding data of the supplementary hierarchy, **when the transmission rate is larger than a reference transmission rate at which all pictures are coded in the basic hierarchy**." Moreover, claim 4 additionally recites "wherein setting the transmission structure sets the proportion of basic hierarchical pictures to supplementary hierarchical pictures such that **the ratio of the basic hierarchical pictures is increased as the transmission rate becomes larger and the ratio of the supplementary hierarchical pictures is increased as the transmission rate becomes smaller**," which is neither disclosed nor suggested by the Radha and Myers, whether alone or in combination. As such, claim 4 is allowable over Radha and Myers.

Claim 5 depends from claim 1 and is allowable as being dependent from an allowable claim.

Although of different scope than claims 1 and 4, claim 9 is allowable for similar reasons. In particular, claim 9 recites:

> wherein the setting a transmission structure sets the proportion of basic hierarchical pictures to supplementary hierarchical pictures such that **the ratio of the basic hierarchical pictures is increased as the transmission rate becomes larger and the ratio of the supplementary hierarchical pictures is increased as the transmission rate becomes smaller**,
>
> wherein the controlling the transmission controls the transmitting the stored supplementary video image coding data to transmit the supplementary video image coding data of the supplementary hierarchy, **when the transmission rate is larger than a reference transmission rate at which all pictures are coded in the basic hierarchy**.

As such, claim 9 is allowable over Radha and Myers.

Although of different scope than claims 1 and 4, claim 10 is allowable for similar reasons. In particular, claim 10 recites:

> wherein the setting a transmission structure sets the proportion of basic hierarchical pictures to supplementary hierarchical pictures such that **the ratio of the basic hierarchical pictures is increased as the transmission rate becomes larger and the ratio of the supplementary hierarchical pictures is increased as the transmission rate becomes smaller**,
>
> wherein the controlling the transmission controls the transmitting the stored supplementary video image coding data to transmit the supplementary video image coding data of the supplementary hierarchy, **when the transmission rate is larger than a reference transmission rate at which all pictures are coded in the basic hierarchy**.

As such, claim 10 is allowable over Radha and Myers.

For at least these reasons, the Applicant respectfully requests that the rejection of claims 1, 4, 5, 9, and 10 under 35 U.S.C. §103(a) be reconsidered and withdrawn.

(B) On page 7, the Office Action rejected claim 6 under 35 U.S.C. § 103(a) as being unpatentable over Radha in view of Myers, and further in view of Applicant's Admitted Prior Art (AAPA). The Applicant traverses this rejection for at least the following reasons.

Claim 6 depends from claim 1 and is allowable as being dependent from an allowable claim. Accordingly, the rejection of claim 6 under 35 U.S.C. §103(a) should be reconsidered and withdrawn.

(C) On page 8, the Office Action rejected claim 7 under 35 U.S.C. § 103(a) as being unpatentable over Radha in view of Myers, as applied above, and further in view of U.S. Patent

Application Publication No. 2007/0091997 to Fogg et al. ("Fogg"). The Applicant traverses this rejection for at least the following reasons.

Claim 7 depends from claim 1 and is allowable as being dependent from an allowable claim. Accordingly, the rejection of claim 6 under 35 U.S.C. §103(a) should be reconsidered and withdrawn.

(D) On page 9, the Office Action rejected claims 8 and 11 under 35 U.S.C. § 103(a) as being unpatentable over Radha in view of U.S. Patent No. 6,697,426 to Van Der Schaar et al. (hereinafter "Van Der Schaar"). The Applicant traverses this rejection for at least the following reasons.

As per claim 8, the combination of Radha and Van Der Schaar fails to disclose or suggest "receiving supplementary video image coding data including a supplementary hierarchical picture whose **coding order and** display order are earlier than those of a basic hierarchical picture included in the basic video image coding data," as recited in claim 8.

In rejecting claim 8, the Office Action asserts "Van der Schaar discloses receiving supplementary video image coding data whose coding order and display order are earlier than those of a basic hierarchical picture included in the basic video image coding data; and acquiring basic video image coding data received before supplementary video image coding data that has been received at the moment," citing Van Der Schaar, Figure 3, and column 2, line 65, to column 3, line 65.

Upon review, the Applicant respectfully disagrees. Van Der Schaar is directed to eliminating the need to store enhanced data layers in memory at a receiving/display device while

waiting to receive/decode base layers "without storing any of the decoded enhancement layer frames to form video frames." Van Der Schaar, column 2, lines 36-37; *see also* column 3, lines 1-6. To accomplish this, Van Der Schaar disclose re-arranging the transmission order of the enhancement frames "to be the same as the **display order** of the enhancement frames on the decoder side." Van Der Schaar, column 3, lines 27-29.

Re-arranging enhancement frames to be in the same order as the **display order**, as disclosed by Van Der Schaar, does not disclose or adequately suggest "receiving supplementary video image coding data including a supplementary hierarchical picture whose **coding order and** display order are earlier than those of a basic hierarchical picture included in the basic video image coding data." Indeed, Van Der Schaar is silent regarding **coding order**. As such, claim 8 is allowable over Radha and Van Der Schaar.

Although of different scope than claim 8, claim 11 is allowable for similar reasons. In particular, claim 11 recites "receiving the supplementary video image coding data including a supplementary hierarchical picture having coding order and display order that are earlier than those of a basic hierarchical picture included in the basic video image coding data." As such, claim 11 is allowable over Radha and Van Der Schaar.

Accordingly, the rejection of claims 8 and 11 under 35 U.S.C. §103(a) should be reconsidered and withdrawn.

Conclusion

All of the stated grounds of rejection have been properly traversed, accommodated, or rendered moot. The Applicant therefore respectfully requests that the Examiner reconsider all presently outstanding rejections and that they be withdrawn. The Applicant believes that a full and complete reply has been made to the outstanding Office Action and, as such, the present application is in condition for allowance. If the Examiner believes, for any reason, that personal communication will expedite prosecution of this application, the Examiner is hereby invited to telephone the undersigned at the number provided.

In view of the above amendment, the Applicant believes the pending application is in condition for allowance.

Dated: May 8, 2017

Respectfully submitted,

By: /Michael A. Sartori, Ph.D./
Michael A. Sartori, Ph.D.
Registration No.: 41,289
Ryan T. Ward
Registration No.: 63,647
VENABLE LLP
P.O. Box 34385
Washington, DC 20043-9998
(202) 344-4000
(202) 344-8300 (Fax)
Attorney/Agent For Applicant

#15337155v1

Doc code: IDS
Doc description: Information Disclosure Statement (IDS) Filed

PTO/SB/08a (03-15)
Approved for use through 07/31/2016. OMB 0651-0031
U.S. Patent and Trademark Office; U.S. DEPARTMENT OF COMMERCE
Under the Paperwork Reduction Act of 1995, no persons are required to respond to a collection of information unless it contains a valid OMB control number.

INFORMATION DISCLOSURE STATEMENT BY APPLICANT (**Not for submission under 37 CFR 1.99)**	Application Number	14657359
	Filing Date	2015-03-13
	First Named Inventor	Hideki Takehara
	Art Unit	2421
	Examiner Name	Robert J. Hance
	Attorney Docket Number	119547.380321

U.S.PATENTS Remove

Examiner Initial*	Cite No	Patent Number	Kind Code[1]	Issue Date	Name of Patentee or Applicant of cited Document	Pages,Columns,Lines where Relevant Passages or Relevant Figures Appear
	1					

If you wish to add additional U.S. Patent citation information please click the Add button. Add

U.S.PATENT APPLICATION PUBLICATIONS Remove

Examiner Initial*	Cite No	Publication Number	Kind Code[1]	Publication Date	Name of Patentee or Applicant of cited Document	Pages,Columns,Lines where Relevant Passages or Relevant Figures Appear
	1					

If you wish to add additional U.S. Published Application citation information please click the Add button. Add

FOREIGN PATENT DOCUMENTS Remove

Examiner Initial*	Cite No	Foreign Document Number[3]	Country Code[2] i	Kind Code[4]	Publication Date	Name of Patentee or Applicant of cited Document	Pages,Columns,Lines where Relevant Passages or Relevant Figures Appear	T[5]
	1	2010-087827	JP	A	2010-04-15	Sharp KK	Cited in Office Action in counterpart Japanese Patent Application No. 2014-071975, dated May 9, 2017; w/ English	

If you wish to add additional Foreign Patent Document citation information please click the Add button Add

NON-PATENT LITERATURE DOCUMENTS Remove

Examiner Initials*	Cite No	Include name of the author (in CAPITAL LETTERS), title of the article (when appropriate), title of the item (book, magazine, journal, serial, symposium, catalog, etc), date, pages(s), volume-issue number(s), publisher, city and/or country where published.	T[5]

EFS Web 2.1.17

INFORMATION DISCLOSURE STATEMENT BY APPLICANT (Not for submission under 37 CFR 1.99)	Application Number	14657359
	Filing Date	2015-03-13
	First Named Inventor	Hideki Takehara
	Art Unit	2421
	Examiner Name	Robert J. Hance
	Attorney Docket Number	119547.380321

	1		

If you wish to add additional non-patent literature document citation information please click the Add button Add

EXAMINER SIGNATURE

Examiner Signature		Date Considered	

*EXAMINER: Initial if reference considered, whether or not citation is in conformance with MPEP 609. Draw line through a citation if not in conformance and not considered. Include copy of this form with next communication to applicant.

[1] See Kind Codes of USPTO Patent Documents at www.USPTO.GOV or MPEP 901.04. [2] Enter office that issued the document, by the two-letter code (WIPO Standard ST.3). [3] For Japanese patent documents, the indication of the year of the reign of the Emperor must precede the serial number of the patent document. [4] Kind of document by the appropriate symbols as indicated on the document under WIPO Standard ST.16 if possible. [5] Applicant is to place a check mark here if English language translation is attached.

INFORMATION DISCLOSURE STATEMENT BY APPLICANT (Not for submission under 37 CFR 1.99)	Application Number	14657359
	Filing Date	2015-03-13
	First Named Inventor	Hideki Takehara
	Art Unit	2421
	Examiner Name	Robert J. Hance
	Attorney Docket Number	119547.380321

CERTIFICATION STATEMENT

Please see 37 CFR 1.97 and 1.98 to make the appropriate selection(s):

☒ That each item of information contained in the information disclosure statement was first cited in any communication from a foreign patent office in a counterpart foreign application not more than three months prior to the filing of the information disclosure statement. See 37 CFR 1.97(e)(1).

OR

☐ That no item of information contained in the information disclosure statement was cited in a communication from a foreign patent office in a counterpart foreign application, and, to the knowledge of the person signing the certification after making reasonable inquiry, no item of information contained in the information disclosure statement was known to any individual designated in 37 CFR 1.56(c) more than three months prior to the filing of the information disclosure statement. See 37 CFR 1.97(e)(2).

☒ See attached certification statement.

The fee set forth in 37 CFR 1.17 (p) has been submitted herewith.

A certification statement is not submitted herewith.

SIGNATURE

A signature of the applicant or representative is required in accordance with CFR 1.33, 10.18. Please see CFR 1.4(d) for the form of the signature.

Signature	/Ryan Ward/	Date (YYYY-MM-DD)	2017-06-01
Name/Print	Ryan Ward	Registration Number	63,647

This collection of information is required by 37 CFR 1.97 and 1.98. The information is required to obtain or retain a benefit by the public which is to file (and by the USPTO to process) an application. Confidentiality is governed by 35 U.S.C. 122 and 37 CFR 1.14. This collection is estimated to take 1 hour to complete, including gathering, preparing and submitting the completed application form to the USPTO. Time will vary depending upon the individual case. Any comments on the amount of time you require to complete this form and/or suggestions for reducing this burden, should be sent to the Chief Information Officer, U.S. Patent and Trademark Office, U.S. Department of Commerce, P.O. Box 1450, Alexandria, VA 22313-1450. DO NOT SEND FEES OR COMPLETED FORMS TO THIS ADDRESS. **SEND TO: Commissioner for Patents, P.O. Box 1450, Alexandria, VA 22313-1450.**

Privacy Act Statement

The Privacy Act of 1974 (P.L. 93-579) requires that you be given certain information in connection with your submission of the attached form related to a patent application or patent. Accordingly, pursuant to the requirements of the Act, please be advised that: (1) the general authority for the collection of this information is 35 U.S.C. 2(b)(2); (2) furnishing of the information solicited is voluntary; and (3) the principal purpose for which the information is used by the U.S. Patent and Trademark Office is to process and/or examine your submission related to a patent application or patent. If you do not furnish the requested information, the U.S. Patent and Trademark Office may not be able to process and/or examine your submission, which may result in termination of proceedings or abandonment of the application or expiration of the patent.

The information provided by you in this form will be subject to the following routine uses:

1. The information on this form will be treated confidentially to the extent allowed under the Freedom of Information Act (5 U.S.C. 552) and the Privacy Act (5 U.S.C. 552a). Records from this system of records may be disclosed to the Department of Justice to determine whether the Freedom of Information Act requires disclosure of these record s.

2. A record from this system of records may be disclosed, as a routine use, in the course of presenting evidence to a court, magistrate, or administrative tribunal, including disclosures to opposing counsel in the course of settlement negotiations.

3. A record in this system of records may be disclosed, as a routine use, to a Member of Congress submitting a request involving an individual, to whom the record pertains, when the individual has requested assistance from the Member with respect to the subject matter of the record.

4. A record in this system of records may be disclosed, as a routine use, to a contractor of the Agency having need for the information in order to perform a contract. Recipients of information shall be required to comply with the requirements of the Privacy Act of 1974, as amended, pursuant to 5 U.S.C. 552a(m).

5. A record related to an International Application filed under the Patent Cooperation Treaty in this system of records may be disclosed, as a routine use, to the International Bureau of the World Intellectual Property Organization, pursuant to the Patent Cooperation Treaty.

6. A record in this system of records may be disclosed, as a routine use, to another federal agency for purposes of National Security review (35 U.S.C. 181) and for review pursuant to the Atomic Energy Act (42 U.S.C. 218(c)).

7. A record from this system of records may be disclosed, as a routine use, to the Administrator, General Services, or his/her designee, during an inspection of records conducted by GSA as part of that agency's responsibility to recommend improvements in records management practices and programs, under authority of 44 U.S.C. 2904 and 2906. Such disclosure shall be made in accordance with the GSA regulations governing inspection of records for this purpose, and any other relevant (i.e., GSA or Commerce) directive. Such disclosure shall not be used to make determinations about individuals.

8. A record from this system of records may be disclosed, as a routine use, to the public after either publication of the application pursuant to 35 U.S.C. 122(b) or issuance of a patent pursuant to 35 U.S.C. 151. Further, a record may be disclosed, subject to the limitations of 37 CFR 1.14, as a routine use, to the public if the record was filed in an application which became abandoned or in which the proceedings were terminated and which application is referenced by either a published application, an application open to public inspections or an issued patent.

9. A record from this system of records may be disclosed, as a routine use, to a Federal, State, or local law enforcement agency, if the USPTO becomes aware of a violation or potential violation of law or regulation.

UNITED STATES PATENT AND TRADEMARK OFFICE

UNITED STATES DEPARTMENT OF COMMERCE
United States Patent and Trademark Office
Address: COMMISSIONER FOR PATENTS
P.O. Box 1450
Alexandria, Virginia 22313-1450
www.uspto.gov

APPLICATION NO.	FILING DATE	FIRST NAMED INVENTOR	ATTORNEY DOCKET NO.	CONFIRMATION NO.
14/657,359	03/13/2015	Hideki TAKEHARA	119547-380321	3775

26694 7590 07/05/2017
VENABLE LLP
P.O. BOX 34385
WASHINGTON, DC 20043-9998

EXAMINER
HANCE, ROBERT J

ART UNIT	PAPER NUMBER
2423	

NOTIFICATION DATE	DELIVERY MODE
07/05/2017	ELECTRONIC

Please find below and/or attached an Office communication concerning this application or proceeding.

The time period for reply, if any, is set in the attached communication.

Notice of the Office communication was sent electronically on above-indicated "Notification Date" to the following e-mail address(es):

PTOMail@Venable.com
cavanhouten@venable.com

Office Action Summary	Application No. 14/657,359	Applicant(s) TAKEHARA ET AL.	
	Examiner ROBERT HANCE	Art Unit 2423	AIA (First Inventor to File) Status Yes

-- The MAILING DATE of this communication appears on the cover sheet with the correspondence address --

Period for Reply

A SHORTENED STATUTORY PERIOD FOR REPLY IS SET TO EXPIRE 3 MONTHS FROM THE MAILING DATE OF THIS COMMUNICATION.

- Extensions of time may be available under the provisions of 37 CFR 1.136(a). In no event, however, may a reply be timely filed after SIX (6) MONTHS from the mailing date of this communication.
- If NO period for reply is specified above, the maximum statutory period will apply and will expire SIX (6) MONTHS from the mailing date of this communication.
- Failure to reply within the set or extended period for reply will, by statute, cause the application to become ABANDONED (35 U.S.C. § 133). Any reply received by the Office later than three months after the mailing date of this communication, even if timely filed, may reduce any earned patent term adjustment. See 37 CFR 1.704(b).

Status

1)☒ Responsive to communication(s) filed on 5/8/17.

☐ A declaration(s)/affidavit(s) under **37 CFR 1.130(b)** was/were filed on _____.

2a)☐ This action is **FINAL**. 2b)☒ This action is non-final.

3)☐ An election was made by the applicant in response to a restriction requirement set forth during the interview on _____; the restriction requirement and election have been incorporated into this action.

4)☐ Since this application is in condition for allowance except for formal matters, prosecution as to the merits is closed in accordance with the practice under *Ex parte Quayle*, 1935 C.D. 11, 453 O.G. 213.

Disposition of Claims*

5)☒ Claim(s) 1 and 4-11 is/are pending in the application.

5a) Of the above claim(s) _____ is/are withdrawn from consideration.

6)☐ Claim(s) _____ is/are allowed.

7)☒ Claim(s) 1 and 4-11 is/are rejected.

8)☐ Claim(s) _____ is/are objected to.

9)☐ Claim(s) _____ are subject to restriction and/or election requirement.

* If any claims have been determined allowable, you may be eligible to benefit from the **Patent Prosecution Highway** program at a participating intellectual property office for the corresponding application. For more information, please see http://www.uspto.gov/patents/init_events/pph/index.jsp or send an inquiry to PPHfeedback@uspto.gov.

Application Papers

10)☐ The specification is objected to by the Examiner.

11)☐ The drawing(s) filed on _____ is/are: a)☐ accepted or b)☐ objected to by the Examiner.

Applicant may not request that any objection to the drawing(s) be held in abeyance. See 37 CFR 1.85(a).

Replacement drawing sheet(s) including the correction is required if the drawing(s) is objected to. See 37 CFR 1.121(d).

Priority under 35 U.S.C. § 119

12)☐ Acknowledgment is made of a claim for foreign priority under 35 U.S.C. § 119(a)-(d) or (f).

Certified copies:

a)☐ All b)☐ Some** c)☐ None of the:

1.☐ Certified copies of the priority documents have been received.

2.☐ Certified copies of the priority documents have been received in Application No. _____.

3.☐ Copies of the certified copies of the priority documents have been received in this National Stage application from the International Bureau (PCT Rule 17.2(a)).

** See the attached detailed Office action for a list of the certified copies not received.

Attachment(s)

1) ☒ Notice of References Cited (PTO-892)

2) ☒ Information Disclosure Statement(s) (PTO/SB/08a and/or PTO/SB/08b) Paper No(s)/Mail Date _____.

3) ☐ Interview Summary (PTO-413) Paper No(s)/Mail Date. _____ .

4) ☐ Other: _____.

DETAILED ACTION

1. The present application, filed on or after March 16, 2013, is being examined under the first inventor to file provisions of the AIA.

Continued Examination Under 37 CFR 1.114

2. A request for continued examination under 37 CFR 1.114, including the fee set forth in 37 CFR 1.17(e), was filed in this application after final rejection. Since this application is eligible for continued examination under 37 CFR 1.114, and the fee set forth in 37 CFR 1.17(e) has been timely paid, the finality of the previous Office action has been withdrawn pursuant to 37 CFR 1.114. Applicant's submission filed on 05/08/2017 has been entered.

Response to Arguments

3. Applicant's arguments filed 05/08/2017 have been fully considered but they are not persuasive.

Applicant argues on pages 10-11 of the Remarks that Radha and Myers fail to disclose controlling transmission of supplemental video images “when the transmission rate is larger than a reference transmission rate at which all pictures are coded in the basic hierarchy” as recited in claim 1. The examiner respectfully disagrees. Radha discloses exactly this in col. 8 lines 15-30, which details that enhancement (supplemental) data is only transmitted when the transmission rate R is larger than R_{BL}, a reference transmission rate of encoding of the base layer. This passage teaches the

subject matter amended into claim 1, and therefore the combination of Radha and Myers renders obvious the claim as currently presented. This reasoning also applies to claim 4.

Applicant argues on page 11 that Radha and Myers fail to disclose that the "ratio of basic hierarchical pictures is increased as the transmission rate becomes larger and the ratio of the supplementary hierarchical pictures is increased as the transmission rate becomes smaller" as recited in claim 4. The examiner respectfully disagrees. Radha discloses in Fig. 10 and col. 9 line 2 - col. 10 line 19 that as network bandwidth increases, base layers of higher bitrate are selected. For example, when the network bandwidth is R_{min}, a base layer of bitrate R_{B1} is delivered. This means that at bandwidths between R_{min} and R_{B1}, the ratio of base layer data to enhancement layer data will be relatively small. However, when network bandwidth is R_{B3} or greater, a base layer of much larger bitrate is selected, and the ratio of base to enhancement data will be higher. Therefore Radha discloses that the ratio of basic hierarchical pictures (base layer data) is increased as the transmission rate becomes larger and the ratio of the supplementary hierarchical pictures (enhancement layer data) is increased as the transmission rate becomes smaller.

The above reasoning also applies to claims 9 and 10.

Applicant's arguments on pages 13-14 regarding claim 8 have been considered but are moot in view of the new grounds of rejection, below.

Claim Rejections - 35 USC § 103

1. The following is a quotation of 35 U.S.C. 103 which forms the basis for all obviousness rejections set forth in this Office action:

> A patent for a claimed invention may not be obtained, notwithstanding that the claimed invention is not identically disclosed as set forth in section 102, if the differences between the claimed invention and the prior art are such that the claimed invention as a whole would have been obvious before the effective filing date of the claimed invention to a person having ordinary skill in the art to which the claimed invention pertains. Patentability shall not be negated by the manner in which the invention was made.

2. Claims 1, 4, 5, 9, and 10 are rejected under 35 U.S.C. 103 as being unpatentable over Radha in view of Myers et al., US Pub No. 2011/0082945.

As to claim 1 Radha discloses a video image coding data transmitter comprising: a processor and a memory unit having instructions stored which, when executed by the processor, cause the processor to perform operations comprising:

acquiring the transmission rate of a network (**Fig. 6: 48; col. 6 lines 28-38**);

setting a transmission structure including a basic hierarchy and a supplementary hierarchy (**Fig. 6: 48; col. 6 lines 28-38; col. 7 lines 34-46; Fig. 10 – the bit-rate of the base layer (basic hierarchy) and enhancement layer (supplementary hierarchy) are set based on measured bandwidth, thus setting the transmission structure**);

transmitting basic video image coding data of the basic hierarchy (**Fig. 6: 55; col. 8 lines 15-47**); wherein the memory unit is further configured to store supplementary video image coding data of the supplementary hierarchy and output the supplementary video image coding data of the supplementary hierarchy in storing order; transmitting the supplementary video image coding data stored in the memory unit; and controlling

the transmission of the supplementary video image coding data of the supplementary hierarchy according to the transmission rate (**Fig. 6: 54; col. 7 line 38 – col. 8 line 47; Fig. 10 and its description – a plurality of enhancement layers are produced (for example by DCT, inherently involving storage in memory), and the data sent is chosen based on the measured bandwidth**),

wherein the controlling the transmission controls the transmitting the supplementary video image coding data to transmit the supplementary video image coding data of the supplementary hierarchy, when the transmission rate is larger than a reference transmission rate at which all pictures are coded in the basic hierarchy (**col. 8 lines 15-30 - enhancement (supplemental) data is only transmitted when the transmission rate R is larger than R_{BL}, a reference transmission rate of encoding of the base layer**).

Radha fails to disclose that a period for setting the transmission structure is changed according to at least one of the number of pictures in the supplementary hierarchy stored in the memory and the transmission rate.

However, in an analogous art, Myers discloses that a period for setting a transmission structure is changed according to a transmission rate (**[0130]-[0131] – bandwidth is re-measured after each chunk of data is delivered, and the amount of enhancement data (the transmission structure) is adjusted accordingly. Therefore the period for which the transmission structure is set will vary based on how often bandwidth is re-measured, which depends on the transmission rate**).

It would have been obvious to a skilled artisan at the time of the invention to modify the system of Radha with the teachings of Myers, the rationale being to ensure accurate and up-to-date bandwidth measurements.

As to claim 4 see rejection of claim 1. The combined system of Radha and Myers further discloses that a period for acquiring the transmission rate is changed according to the number of pictures in the supplemental hierarchy stored in the memory unit (**Myers [0130]-[0131] – bandwidth is measured (transmission rate is acquired) based on the last chunk of video data delivered. As the delivered chunks contain enhancement layers (see Fig. 5 and [0090]), the time required to deliver these chunks will vary depending on the number of images stored in a transmission buffer (Fig. 2) and delivered to the viewer**).

Radha further discloses wherein setting the transmission structure sets the proportion of basic hierarchical pictures to supplementary hierarchical pictures such that the ration of the basic hierarchical pictures is increased as the transmission rate becomes larger and the ratio of supplementary hierarchical pictures is increased as the transmission rate becomes smaller (**Fig. 10 and col. 9 line 2 - col. 10 line 19 - as network bandwidth increases, base layers of higher bitrate are selected. Thus at bandwidths between R_{min} and R_{B1}, the ratio of base layer data to enhancement layer data will be relatively small, and when network bandwidth is R_{B3} or greater, a base layer of much larger bitrate is selected, and the ratio of base to enhancement data will be higher. Therefore Radha discloses that the ratio of**

basic hierarchical pictures (base layer data) is increased as the transmission rate becomes larger and the ratio of the supplementary hierarchical pictures (enhancement layer data) is increased as the transmission rate becomes smaller).

As to claim 5 Radha discloses the video image coding data transmitter according to claim 1, wherein the memory unit is further configured to store instructions which, when executed by the processor, cause the processor to set a part of the area of a picture to represent the basic hierarchy and a part of the area other than the part representing the basic hierarchy to be the supplementary hierarchy (**col. 1 lines 20-35 and lines 56-63 – the residual data in the enhancement layer corresponds to data not present in the base layer, therefore is part of the area other than that represented by the base layer**).

As to claim 9 see rejection of claims 1 and 4.

As to claim 10 the combined system of Radha and Myers, as presented above, discloses a video image coding data transmission program embedded in a non-transitory computer readable recording medium that, when executed on a computer, implements:

acquiring the transmission rate of a network (**Radha Fig. 6: 48; col. 6 lines 28-38**);

setting a transmission structure including a basic hierarchy and a supplementary hierarchy (**Radha Fig. 6: 48; col. 6 lines 28-38; col. 7 lines 34-46; Fig. 10 – the bit-rate of the base layer (basic hierarchy) and enhancement layer (supplementary hierarchy) are set based on measured bandwidth, thus setting the transmission structure**);

coding a video image based on the transmission structure into video image coding data including basic video image coding data of the basic hierarchy and supplementary video image coding data of the supplementary hierarchy and outputting the supplementary video image coding data of the supplementary hierarchy in storing order (**Radha Fig. 7: S702 – S704 and their description**);

transmitting basic video image coding data of the basic hierarchy (**Radha Fig. 6: 55; col. 8 lines 15-47**);

storing supplementary video image coding data of the supplementary hierarchy; transmitting the stored supplementary video image coding data; and controlling the transmission according to the transmission rate (**Radha Fig. 6: 54; col. 7 line 38 – col. 8 line 47; Fig. 10 and its description – a plurality of enhancement layers are produced (for example by DCT, inherently involving storage in memory), and the data sent is chosen based on the measured bandwidth**),

wherein a period for acquiring the transmission rate is changed according to the number of pictures in the stored supplemental hierarchy (**Myers [0130]-[0131] – bandwidth is measured, or transmission rate is acquired, based on the last chunk delivered. As the delivered chunks contain enhancement layers (see Fig. 5 and**

[0090]), the time required to deliver these chunks will vary depending on the number of images stored in a transmission buffer (Fig. 2) and delivered to the viewer),

wherein setting the transmission structure sets the proportion of basic hierarchical pictures to supplementary hierarchical pictures such that the ration of the basic hierarchical pictures is increased as the transmission rate becomes larger and the ratio of supplementary hierarchical pictures is increased as the transmission rate becomes smaller (**Fig. 10 and col. 9 line 2 - col. 10 line 19 - as network bandwidth increases, base layers of higher bitrate are selected. Thus at bandwidths between R_{min} and R_{B1}, the ratio of base layer data to enhancement layer data will be relatively small, and when network bandwidth is R_{B3} or greater, a base layer of much larger bitrate is selected, and the ratio of base to enhancement data will be higher. Therefore Radha discloses that the ratio of basic hierarchical pictures (base layer data) is increased as the transmission rate becomes larger and the ratio of the supplementary hierarchical pictures (enhancement layer data) is increased as the transmission rate becomes smaller**),

wherein the controlling the transmission controls the transmitting the supplementary video image coding data to transmit the supplementary video image coding data of the supplementary hierarchy, when the transmission rate is larger than a reference transmission rate at which all pictures are coded in the basic hierarchy (**col. 8 lines 15-30 - enhancement (supplemental) data is only transmitted when the**

transmission rate R is larger than R_{BL}, a reference transmission rate of encoding of the base layer).

3. Claim 6 is rejected under 35 U.S.C. 103 as being unpatentable over Radha in view of Myers, and further in view of Applicant's Admitted Prior Art (AAPA).

As to claim 6 Radha fails to explicitly disclose the video image coding data transmitter according to claim 1, wherein the transmission structure setting unit sets a part of the syntax of the video image coding data to represent the basic hierarchy and a part of the syntax that is different from the part representing the basic hierarchy to represent the supplementary hierarchy.

However, AAPA discloses that this was well known in the art at the time of the invention (see Remarks, filed 02/09/2017, Applicant's failure to traverse the previous assertion of official notice). Therefore it would have been obvious to a skilled artisan to modify the system of Radha to include this, the rationale being to ensure proper decoding by the receiver.

1. Claim 7 is rejected under 35 U.S.C. 103 as being unpatentable over Radha and Myers, as applied above, and further in view of Fogg.

As to claim 7 Radha and Myers fails to disclose the video image coding data transmitter according to claim 1, wherein the transmission structure setting unit sets a

video image consisting of a luminance component to represent the basic hierarchy and a video image consisting of a color difference component to represent the supplementary hierarchy.

However, in an analogous art, Fogg discloses setting a video image consisting of a luminance component to represent a basic hierarchy and a video image consisting of a color difference component to represent a supplementary hierarchy (**[0044] – luminance data is carried in the base layer (basic hierarchy) while chrominance is carried in the enhancement layer**).

It would have been obvious to a skilled artisan at the time of the invention to modify the system of Radha and Myers with the teachings of Fogg, the rationale being to enable high-quality (although monochromatic) images during periods of reduced bandwidth.

2. Claims 8 and 11 are rejected under 35 U.S.C. 103 as being unpatentable over Radha in view of Chen et al., US Patent No. 5,886,736.

As to claim 8 Radha discloses a video image coding data receiver comprising: a processor and a memory unit having instructions stored which, when executed by the processor, cause the processor to perform operations comprising:

receiving basic video image coding data (**Fig. 9: 60**);

decoding the received basic video image coding data so as to reproduce a video image (**Fig. 9: 58**);

receiving supplementary video image coding data including a supplementary hierarchical picture (**Fig. 9: 59**);

acquiring basic video image coding data (**Fig. 9: 60**); and

reconstructing video image coding data from the basic video image coding data and the supplementary video image coding data (**Fig. 9: 60; col. 8 lines 48-67**).

Radha fails to disclose receiving supplementary video image coding data whose coding order and display order are earlier than those of a basic hierarchical picture included in the basic video image coding data; and acquiring basic video image coding data received before supplementary video image coding data that has been received at the moment.

However, in an analogous art, Chen discloses receiving supplementary video image coding data whose dependency order and display order are earlier than those of a basic hierarchical picture included in the basic video image coding data; and acquiring basic video image coding data received before supplementary video image coding data that has been received at the moment (**Fig. 2; col. 9 line 16 - col. 10 line 3**).

It would have been obvious to a skilled artisan at the time of the invention to modify the system of Radha with the teachings of Chen, the rationale being to reduce memory requirements in the receiving device (Chen col. 3 lines 55-63).

While the combined system of Radha and Chen discloses receiving supplementary video image coding data whose <u>dependency</u> order is earlier than those of a basic hierarchical picture, the system fails to disclose receiving supplementary video whose <u>coding</u> order are earlier than basic video data. However, official notice is

taken that this was well known in the art at the time of the invention. For example, it was widely practiced to encode video data in dependency order. Therefore it would have been obvious to a skilled artisan to modify the system of Radha and Chen to include this functionality, the rationale being to utilize widely available encoders.

As to claim 11 see rejection of claims 1 and 8.

Conclusion

Any inquiry concerning this communication or earlier communications from the examiner should be directed to ROBERT HANCE whose telephone number is (571)270-5319. The examiner can normally be reached on M-F 8:00-5:00.

Examiner interviews are available via telephone, in-person, and video conferencing using a USPTO supplied web-based collaboration tool. To schedule an interview, applicant is encouraged to use the USPTO Automated Interview Request (AIR) at http://www.uspto.gov/interviewpractice.

If attempts to reach the examiner by telephone are unsuccessful, the examiner's supervisor, Benjamin Bruckart can be reached on (571) 272-3982. The fax phone number for the organization where this application or proceeding is assigned is 571-273-8300.

Information regarding the status of an application may be obtained from the Patent Application Information Retrieval (PAIR) system. Status information for published applications may be obtained from either Private PAIR or Public PAIR. Status information for unpublished applications is available through Private PAIR only. For more information about the PAIR system, see http://pair-direct.uspto.gov. Should you have questions on access to the Private PAIR system, contact the Electronic Business Center (EBC) at 866-217-9197 (toll-free). If you would like assistance from a USPTO Customer Service Representative or access to the automated information system, call 800-786-9199 (IN USA OR CANADA) or 571-272-1000.

ROBERT HANCE
Primary Examiner
Art Unit 2423

/ROBERT HANCE/
Primary Examiner, Art Unit 2423

Notice of References Cited	Application/Control No. 14/657,359	Applicant(s)/Patent Under Reexamination TAKEHARA ET AL.	
	Examiner ROBERT HANCE	Art Unit 2423	Page 1 of 1

U.S. PATENT DOCUMENTS

*		Document Number Country Code-Number-Kind Code	Date MM-YYYY	Name	CPC Classification	US Classification
*	A	US-5,886,736 A	03-1999	Chen; Xuemin	G06T9/004	348/42
	B	US-				
	C	US-				
	D	US-				
	E	US-				
	F	US-				
	G	US-				
	H	US-				
	I	US-				
	J	US-				
	K	US-				
	L	US-				
	M	US-				

FOREIGN PATENT DOCUMENTS

*		Document Number Country Code-Number-Kind Code	Date MM-YYYY	Country	Name	CPC Classification
	N					
	O					
	P					
	Q					
	R					
	S					
	T					

NON-PATENT DOCUMENTS

*		Include as applicable: Author, Title Date, Publisher, Edition or Volume, Pertinent Pages)
	U	
	V	
	W	
	X	

*A copy of this reference is not being furnished with this Office action. (See MPEP § 707.05(a).)
Dates in MM-YYYY format are publication dates. Classifications may be US or foreign.

Doc code: IDS
Doc description: Information Disclosure Statement (IDS) Filed

PTO/SB/08a (03-15)
Approved for use through 07/31/2016. OMB 0651-0031
U.S. Patent and Trademark Office; U.S. DEPARTMENT OF COMMERCE
Under the Paperwork Reduction Act of 1995, no persons are required to respond to a collection of information unless it contains a valid OMB control number.

INFORMATION DISCLOSURE STATEMENT BY APPLICANT (Not for submission under 37 CFR 1.99)		
	Application Number	14657359
	Filing Date	2015-03-13
	First Named Inventor	Hideki Takehara
	Art Unit	2421
	Examiner Name	Robert J. Hance
	Attorney Docket Number	119547.380321

U.S.PATENTS Remove

Examiner Initial*	Cite No	Patent Number	Kind Code[1]	Issue Date	Name of Patentee or Applicant of cited Document	Pages,Columns,Lines where Relevant Passages or Relevant Figures Appear
	1					

If you wish to add additional U.S. Patent citation information please click the Add button. Add

U.S.PATENT APPLICATION PUBLICATIONS Remove

Examiner Initial*	Cite No	Publication Number	Kind Code[1]	Publication Date	Name of Patentee or Applicant of cited Document	Pages,Columns,Lines where Relevant Passages or Relevant Figures Appear
	1					

If you wish to add additional U.S. Published Application citation information please click the Add button. Add

FOREIGN PATENT DOCUMENTS Remove

Examiner Initial*	Cite No	Foreign Document Number[3]	Country Code[2] i	Kind Code[4]	Publication Date	Name of Patentee or Applicant of cited Document	Pages,Columns,Lines where Relevant Passages or Relevant Figures Appear	T[5]
	1	2010-087827	JP	A	2010-04-15	Sharp KK	Cited in Office Action in counterpart Japanese Patent Application No. 2014-071975, dated May 9, 2017; w/ English	

If you wish to add additional Foreign Patent Document citation information please click the Add button Add

NON-PATENT LITERATURE DOCUMENTS Remove

Examiner Initials*	Cite No	Include name of the author (in CAPITAL LETTERS), title of the article (when appropriate), title of the item (book, magazine, journal, serial, symposium, catalog, etc), date, pages(s), volume-issue number(s), publisher, city and/or country where published.	T[5]

ALL REFERENCES CONSIDERED EXCEPT WHERE LINED THROUGH. /R.J.H/

INFORMATION DISCLOSURE STATEMENT BY APPLICANT (Not for submission under 37 CFR 1.99)		
	Application Number	14657359
	Filing Date	2015-03-13
	First Named Inventor	Hideki Takehara
	Art Unit	2421
	Examiner Name	Robert J. Hance
	Attorney Docket Number	119547.380321

	1	

If you wish to add additional non-patent literature document citation information please click the Add button Add

EXAMINER SIGNATURE

Examiner Signature	/ROBERT J HANCE/	Date Considered	06/27/2017

*EXAMINER: Initial if reference considered, whether or not citation is in conformance with MPEP 609. Draw line through a citation if not in conformance and not considered. Include copy of this form with next communication to applicant.

[1] See Kind Codes of USPTO Patent Documents at www.USPTO.GOV or MPEP 901.04. [2] Enter office that issued the document, by the two-letter code (WIPO Standard ST.3). [3] For Japanese patent documents, the indication of the year of the reign of the Emperor must precede the serial number of the patent document. [4] Kind of document by the appropriate symbols as indicated on the document under WIPO Standard ST.16 if possible. [5] Applicant is to place a check mark here if English language translation is attached.

ALL REFERENCES CONSIDERED EXCEPT WHERE LINED THROUGH. /R.J.H/

INFORMATION DISCLOSURE STATEMENT BY APPLICANT (Not for submission under 37 CFR 1.99)		
	Application Number	14657359
	Filing Date	2015-03-13
	First Named Inventor	Hideki Takehara
	Art Unit	2421
	Examiner Name	Robert J. Hance
	Attorney Docket Number	119547.380321

CERTIFICATION STATEMENT

Please see 37 CFR 1.97 and 1.98 to make the appropriate selection(s):

X That each item of information contained in the information disclosure statement was first cited in any communication from a foreign patent office in a counterpart foreign application not more than three months prior to the filing of the information disclosure statement. See 37 CFR 1.97(e)(1).

OR

☐ That no item of information contained in the information disclosure statement was cited in a communication from a foreign patent office in a counterpart foreign application, and, to the knowledge of the person signing the certification after making reasonable inquiry, no item of information contained in the information disclosure statement was known to any individual designated in 37 CFR 1.56(c) more than three months prior to the filing of the information disclosure statement. See 37 CFR 1.97(e)(2).

X See attached certification statement.

The fee set forth in 37 CFR 1.17 (p) has been submitted herewith.

A certification statement is not submitted herewith.

SIGNATURE

A signature of the applicant or representative is required in accordance with CFR 1.33, 10.18. Please see CFR 1.4(d) for the form of the signature.

Signature	/Ryan Ward/	Date (YYYY-MM-DD)	2017-06-01
Name/Print	Ryan Ward	Registration Number	63,647

This collection of information is required by 37 CFR 1.97 and 1.98. The information is required to obtain or retain a benefit by the public which is to file (and by the USPTO to process) an application. Confidentiality is governed by 35 U.S.C. 122 and 37 CFR 1.14. This collection is estimated to take 1 hour to complete, including gathering, preparing and submitting the completed application form to the USPTO. Time will vary depending upon the individual case. Any comments on the amount of time you require to complete this form and/or suggestions for reducing this burden, should be sent to the Chief Information Officer, U.S. Patent and Trademark Office, U.S. Department of Commerce, P.O. Box 1450, Alexandria, VA 22313-1450. DO NOT SEND FEES OR COMPLETED FORMS TO THIS ADDRESS. **SEND TO: Commissioner for Patents, P.O. Box 1450, Alexandria, VA 22313-1450.**

ALL REFERENCES CONSIDERED EXCEPT WHERE LINED THROUGH. /R.J.H/

Privacy Act Statement

The Privacy Act of 1974 (P.L. 93-579) requires that you be given certain information in connection with your submission of the attached form related to a patent application or patent. Accordingly, pursuant to the requirements of the Act, please be advised that: (1) the general authority for the collection of this information is 35 U.S.C. 2(b)(2); (2) furnishing of the information solicited is voluntary; and (3) the principal purpose for which the information is used by the U.S. Patent and Trademark Office is to process and/or examine your submission related to a patent application or patent. If you do not furnish the requested information, the U.S. Patent and Trademark Office may not be able to process and/or examine your submission, which may result in termination of proceedings or abandonment of the application or expiration of the patent.

The information provided by you in this form will be subject to the following routine uses:

1. The information on this form will be treated confidentially to the extent allowed under the Freedom of Information Act (5 U.S.C. 552) and the Privacy Act (5 U.S.C. 552a). Records from this system of records may be disclosed to the Department of Justice to determine whether the Freedom of Information Act requires disclosure of these record s.

2. A record from this system of records may be disclosed, as a routine use, in the course of presenting evidence to a court, magistrate, or administrative tribunal, including disclosures to opposing counsel in the course of settlement negotiations.

3. A record in this system of records may be disclosed, as a routine use, to a Member of Congress submitting a request involving an individual, to whom the record pertains, when the individual has requested assistance from the Member with respect to the subject matter of the record.

4. A record in this system of records may be disclosed, as a routine use, to a contractor of the Agency having need for the information in order to perform a contract. Recipients of information shall be required to comply with the requirements of the Privacy Act of 1974, as amended, pursuant to 5 U.S.C. 552a(m).

5. A record related to an International Application filed under the Patent Cooperation Treaty in this system of records may be disclosed, as a routine use, to the International Bureau of the World Intellectual Property Organization, pursuant to the Patent Cooperation Treaty.

6. A record in this system of records may be disclosed, as a routine use, to another federal agency for purposes of National Security review (35 U.S.C. 181) and for review pursuant to the Atomic Energy Act (42 U.S.C. 218(c)).

7. A record from this system of records may be disclosed, as a routine use, to the Administrator, General Services, or his/her designee, during an inspection of records conducted by GSA as part of that agency's responsibility to recommend improvements in records management practices and programs, under authority of 44 U.S.C. 2904 and 2906. Such disclosure shall be made in accordance with the GSA regulations governing inspection of records for this purpose, and any other relevant (i.e., GSA or Commerce) directive. Such disclosure shall not be used to make determinations about individuals.

8. A record from this system of records may be disclosed, as a routine use, to the public after either publication of the application pursuant to 35 U.S.C. 122(b) or issuance of a patent pursuant to 35 U.S.C. 151. Further, a record may be disclosed, subject to the limitations of 37 CFR 1.14, as a routine use, to the public if the record was filed in an application which became abandoned or in which the proceedings were terminated and which application is referenced by either a published application, an application open to public inspections or an issued patent.

9. A record from this system of records may be disclosed, as a routine use, to a Federal, State, or local law enforcement agency, if the USPTO becomes aware of a violation or potential violation of law or regulation.

ALL REFERENCES CONSIDERED EXCEPT WHERE LINED THROUGH. /R.J.H/

IN THE UNITED STATES PATENT AND TRADEMARK OFFICE

In re Patent Application of: Hideki TAKEHARA et al.	Art Unit: 2421
Application No: 14/657,359	Examiner: Robert J. Hance
Confirmation No: 3775	
Filed: March 13, 2015	Atty. Docket No: 119547.380321
For: VIDEO IMAGE CODING DATA TRANSMITTER, VIDEO IMAGE CODING DATA TRANSMISSION METHOD, VIDEO IMAGE CODING DATA RECEIVER, AND VIDEO IMAGE CODING DATA TRANSMISSION AND RECEPTION SYSTEM	Customer No: 26694 PATENT & TRADEMARK OFFICE

AMENDMENT IN RESPONSE TO NON-FINAL OFFICE ACTION

UNDER 37 C.F.R. § 1.111

MS Amendment
Commissioner for Patents
P.O. Box 1450
Alexandria, VA 22313-1450

Dear Commissioner:

In response to the Office Action dated July 5, 2017, please amend the above-identified U.S. patent application as follows:

Amendments to the Claims begin on page 2 of this paper.

Remarks begin on page 10 of this paper.

The Commissioner is authorized to charge any deficiency in any patent application processing fees pursuant to 37 C.F.R. § 1.17 associated with this communication, and to credit any excess payment, to Deposit Account No. 22-0261.

AMENDMENTS TO THE CLAIMS

Please amend the claims as follows:

1. (Currently Amended) A video image coding data transmitter comprising:

a processor; and

a memory unit having instructions stored which, when executed by the processor, cause the processor to perform operations comprising:

acquiring the transmission rate of a network;

setting a transmission structure including a basic hierarchy and a supplementary hierarchy, the basic hierarchy and the supplementary hierarchy being set in units of a group of pictures including an intra coded picture and a plurality of inter prediction coded pictures;

transmitting basic video image coding data of the basic hierarchy, wherein the memory unit is further configured to store supplementary video image coding data of the supplementary hierarchy for a duration time equal to or longer than the length of the group of pictures and output the supplementary video image coding data of the supplementary hierarchy in storing order;

transmitting the supplementary video image coding data stored in the memory unit; and

controlling the transmission of the supplementary video image coding data of the supplementary hierarchy according to the transmission rate,

wherein a period for setting the transmission structure is changed according to at least one of the number of pictures in the supplementary hierarchy stored in the memory unit and the transmission rate~~,~~

~~wherein the controlling the transmission controls the transmitting the supplementary video image coding data to transmit the supplementary video image coding data of the supplementary~~

~~hierarchy, when the transmission rate is larger than a reference transmission rate at which all pictures are coded in the basic hierarchy~~.

2. (Cancelled)

3. (Cancelled)

4. (Currently Amended) A video image coding data transmitter comprising:

a processor; and

a memory unit having instructions stored which, when executed by the processor, cause the processor to perform operations comprising:

acquiring the transmission rate of a network;

setting a transmission structure including a basic hierarchy and a supplementary hierarchy, the basic hierarchy and the supplementary hierarchy being set in units of a group of pictures including an intra coded picture and a plurality of inter prediction coded pictures;

transmitting basic video image coding data of the basic hierarchy, wherein the memory unit is further configured to store supplementary video image coding data of the supplementary hierarchy for a duration time equal to or longer than the length of the group of pictures and output the supplementary video image coding data of the supplementary hierarchy in storing order;

transmitting the supplementary video image coding data stored in the memory unit; and

controlling the transmission of the supplementary video image coding data according to the transmission rate,

wherein a period for acquiring the transmission rate is changed according to the number of pictures in the supplementary hierarchy stored in the memory unit~~,~~

~~wherein setting the transmission structure sets the proportion of basic hierarchical pictures to supplementary hierarchical pictures such that the ratio of the basic hierarchical pictures is increased as the transmission rate becomes larger and the ratio of the supplementary hierarchical pictures is increased as the transmission rate becomes smaller,~~

~~wherein controlling the transmission controls the transmitting the supplementary video image coding data to transmit the supplementary video image coding data of the supplementary hierarchy, when the transmission rate is larger than a reference transmission rate at which all pictures are coded in the basic hierarchy~~.

5. (Previously Presented) The video image coding data transmitter according to claim 1,

wherein the memory unit is further configured to store instructions which, when executed by the processor, cause the processor to set a part of the area of a picture to represent the basic hierarchy and a part of the area other than the part representing the basic hierarchy to be the supplementary hierarchy.

6. (Previously Presented) The video image coding data transmitter according to claim 1,

wherein the memory unit is further configured to store instructions which, when executed by the processor, cause the processor to set a part of the syntax of the video image coding data to represent the basic hierarchy and a part of the syntax that is different from the part representing the basic hierarchy to represent the supplementary hierarchy.

7. (Previously Presented) The video image coding data transmitter according to claim 1,

wherein the memory unit is further configured to store instructions which, when executed by the processor, cause the processor to set a video image consisting of a luminance component to represent the basic hierarchy and a video image consisting of a color difference component to represent the supplementary hierarchy.

8. (Currently Amended) A video image coding data receiver comprising:

a processor; and

a memory unit having instructions stored which, when executed by the processor, cause the processor to perform operations comprising:

receiving basic video image coding data;

decoding the received basic video image coding data so as to reproduce a video image;

receiving supplementary video image coding data including a supplementary hierarchical picture whose coding order and display order are earlier <u>by a factor of a group of pictures including an intra coded picture and a plurality of inter prediction coded pictures</u> than those of a basic hierarchical picture included in the basic video image coding data<u>, a basic hierarchy and a supplementary hierarchy being set in units of the group of pictures</u>;

acquiring basic video image coding data received before supplementary video image coding data that has been received at the moment; and

reconstructing video image coding data from the basic video image coding data and the supplementary video image coding data.

9. (Currently Amended) A video image coding data transmission method comprising:

acquiring the transmission rate of a network;

setting a transmission structure including a basic hierarchy and a supplementary hierarchy, the basic hierarchy and the supplementary hierarchy being set in units of a group of pictures including an intra coded picture and a plurality of inter prediction coded pictures;

transmitting basic video image coding data of the basic hierarchy;

storing supplementary video image coding data of the supplementary hierarchy for a duration time equal to or longer than the length of the group of pictures and outputting the supplementary video image coding data of the supplementary hierarchy in storing order;

transmitting the stored supplementary video image coding data; and

controlling the transmission according to the transmission rate,

wherein a period for acquiring the transmission rate is changed according to the number of pictures in the stored supplementary hierarchy~~,~~

~~wherein the setting a transmission structure sets the proportion of basic hierarchical pictures to supplementary hierarchical pictures such that the ratio of the basic hierarchical pictures is increased as the transmission rate becomes larger and the ratio of the supplementary hierarchical pictures is increased as the transmission rate becomes smaller,~~

~~wherein the controlling the transmission controls the transmitting the stored supplementary video image coding data to transmit the supplementary video image coding data of the supplementary hierarchy, when the transmission rate is larger than a reference transmission rate at which all pictures are coded in the basic hierarchy~~.

10. (Currently Amended) A video image coding data transmission program embedded in a non-transitory computer readable recording medium that, when executed on a computer, implements:

acquiring the transmission rate of a network;

setting a transmission structure including a basic hierarchy and a supplementary hierarchy, the basic hierarchy and the supplementary hierarchy being set in units of a group of pictures including an intra coded picture and a plurality of inter prediction coded pictures;

coding a video image based on the transmission structure into video image coding data including basic video image coding data of the basic hierarchy and supplementary video image coding data of the supplementary hierarchy;

transmitting basic video image coding data of the basic hierarchy;

storing supplementary video image coding data of the supplementary hierarchy for a duration time equal to or longer than the length of the group of pictures and outputting the supplementary video image coding data of the supplementary hierarchy in storing order;

transmitting the stored supplementary video image coding data; and

controlling the transmission according to the transmission rate,

wherein a period for acquiring the transmission rate is changed according to the number of pictures in the stored supplementary hierarchy~~,~~

~~wherein the setting a transmission structure sets the proportion of basic hierarchical pictures to supplementary hierarchical pictures such that the ratio of the basic hierarchical pictures is~~

~~increased as the transmission rate becomes larger and the ratio of the supplementary hierarchical pictures is increased as the transmission rate becomes smaller,~~

~~wherein the controlling the transmission controls the transmitting the stored supplementary video image coding data to transmit the supplementary video image coding data of the supplementary hierarchy, when the transmission rate is larger than a reference transmission rate at which all pictures are coded in the basic hierarchy~~.

11. (Currently Amended) A video image coding data transmission and reception system comprising:

a video image coding data transmitter that codes and transmits a video image; and

a video image coding data receiver that receives and reconstructs video image coding data,

wherein the video image coding data transmitter includes:

a first processor; and

a first memory unit having instructions stored which, when executed by the first processor, cause the first processor to perform operations comprising:

acquiring the transmission rate of a network;

setting a transmission structure including a basic hierarchy and a supplementary hierarchy, the basic hierarchy and the supplementary hierarchy being set in units of a group of pictures including an intra coded picture and a plurality of inter prediction coded pictures;

transmitting basic video image coding data of the basic hierarchy, wherein the first memory unit is further configured to store supplementary video image coding data of the supplementary hierarchy;

transmitting the supplementary video image coding data stored in the memory unit; and

controlling the transmission of the supplementary video image coding data according to the transmission rate, and

wherein the video image coding data receiver includes:

a second processor; and

a second memory unit having instructions stored which, when executed by the second processor, cause the second processor to perform operations comprising:

receiving the basic video image coding data;

decoding the received basic video image coding data so as to reproduce a video image;

receiving the supplementary video image coding data including a supplementary hierarchical picture having coding order and display order that are earlier <u>by a factor of the group of pictures</u> than those of a basic hierarchical picture included in the basic video image coding data;

acquiring basic video image coding data received before supplementary video image coding data that is currently received; and

reconstructing video image coding data from the basic video image coding data and the supplementary video image coding data.

REMARKS

The Applicant thanks the Examiner for the careful consideration of this application. The Office Action dated July 5, 2017 has been received and its contents carefully considered. Claims 1 and 4-11 are pending in this application. Claims 1, 4, and 8-11 are amended. Claims 2-3 were previously canceled. Support for the amendments can be found, for example, in paragraphs [0070] and [0072] and Figure 5.

Based on the foregoing amendments and the following remarks, the Applicant respectfully requests that the Examiner reconsider all outstanding rejections and that they be withdrawn.

Information Disclosure Statement

The Applicant thanks the Examiner for considering the Information Disclosure Statement submitted on June 1, 2017.

Claim Rejections under 35 U.S.C. § 103

(1) On page 4, the Office Action rejected claims 1, 4, 5, 9, and 10 under 35 U.S.C. § 103(a) as being unpatentable over U.S. Patent No. 6,292,512 to Radha et al. (hereinafter "Radha") in view of U.S. Patent Application Publication No. 2011/0082945 to Myers et al. ("Myers"). The Applicant traverses this rejection for at least the following reasons.

Claim 1 is allowable over Radha and Myers for at least the following reasons.

First, the combination of Radha and Myers fails to disclose or render obvious "setting a transmission structure including a basic hierarchy and a supplementary hierarchy, **the basic hierarchy and the supplementary hierarchy being set in units of a group of pictures including**

an intra coded picture and a plurality of inter prediction coded pictures," as recited in claim 1. In rejecting claim 1, the Office Action apparently aligns the recited "basic hierarchy" with the "base layer 47" of Radha, and apparently aligns the recited "supplementary hierarchy" with the "enhancement layer 50" of Radha.

However, Radha fails to disclose that the base layer 47 and the enhancement layer 50 are set in units of a group of pictures including an intra coded picture and a plurality of inter prediction coded pictures. Instead, Radha discloses that, "Base layer 47 includes frames, such as frame 49. These frames are compressed at a bit-rate of RBL by BL encoder 44. Enhancement layer 50, however, includes fine-granular coded images corresponding to contemporaneous frames in the base layer." Radha, column 6, lines 41-45. Further, as to the enhancement layer 50, Radha discloses that, "EL encoder 54 codes residual images 51 at a bit-rate of RMAX -RBL (i.e., the difference between the base layer bandwidth and maximum bandwidth of network 43) using a fine-granular coding technique." Radha, column 7, lines 39-43 and lines 47-59. As such, Rahda fails to disclose "setting a transmission structure including a basic hierarchy and a supplementary hierarchy, the basic hierarchy and the supplementary hierarchy being set in units of a group of pictures including an intra coded picture and a plurality of inter prediction coded pictures."

Myers fails to overcome the deficiencies of Radha and is only asserted as disclosing "wherein a period for setting the transmission structure is changed according to at least one of the number of pictures in the supplementary hierarchy stored in the memory unit and the transmission rate."

Thus, the combination of Radha and Myers fails to disclose or render obvious "setting a transmission structure including a basic hierarchy and a supplementary hierarchy, **the basic**

hierarchy and the supplementary hierarchy being set in units of a group of pictures including an intra coded picture and a plurality of inter prediction coded pictures."

Second, the combination of Radha and Myers fails to disclose or render obvious "transmitting basic video image coding data of the basic hierarchy, wherein the memory unit is further configured to store supplementary video image coding data of the supplementary hierarchy **for a duration time equal to or longer than the length of the group of pictures** and output the supplementary video image coding data of the supplementary hierarchy in storing order," as recited in amended claim 1. In rejecting claim 1, the Office Action aligns the recited "to store supplementary video image coding data of the supplementary hierarchy" with the "fine-granular coding techniques" of Radha.

However, Radha fails to disclose that the fine-granular coding techniques store supplementary video image coding data of the supplementary hierarchy for a duration time equal to or longer than the length of the group of pictures. Instead, Radha discloses that the examples of the fine-granular coding techniques "include an embedded discrete cosine transform ("DCT") technique and a scalable matching pursuit ("MP") technique. Preferred embodiments of the invention, however, use one of the family of wavelet transforms (e.g., zero tree wavelet transforms) to effect enhancement layer coding. For example, the preferred embodiment of the invention uses the still-image coding technique provided in MPEG-4 to perform fine-granular scalability coding. This approach codes images as whole using wavelet transforms." Radha, column 7, lines 50-59. Radha is silent as to the fine-granular coding techniques **storing** supplementary video image coding data of the supplementary hierarchy **for a duration time equal to or longer than the length of the group of pictures**, where **the group of pictures includes an intra coded picture and a plurality of inter**

prediction coded pictures. As such, Rahda fails to disclose "transmitting basic video image coding data of the basic hierarchy, wherein the memory unit is further configured to store supplementary video image coding data of the supplementary hierarchy for a duration time equal to or longer than the length of the group of pictures and output the supplementary video image coding data of the supplementary hierarchy in storing order."

Myers fails to overcome the deficiencies of Radha and is only asserted as disclosing "wherein a period for setting the transmission structure is changed according to at least one of the number of pictures in the supplementary hierarchy stored in the memory unit and the transmission rate."

Thus, the combination of Radha and Myers fails to disclose or render obvious "transmitting basic video image coding data of the basic hierarchy, wherein the memory unit is further configured to store supplementary video image coding data of the supplementary hierarchy **for a duration time equal to or longer than the length of the group of pictures** and output the supplementary video image coding data of the supplementary hierarchy in storing order."

Therefore, claim 1 is allowable over the combination of Radha and Myers.

Claim 5 depends from claim 1 and is allowable as depending from an allowable claim.

Although of different scope than claim 1, claims 4, 9 and 10 are also patentable over the combination of Radha and Myers for at least similar reasons provided above with respect to claim 1.

In particular, claim 4 recites:

> setting a transmission structure including a basic hierarchy and a supplementary hierarchy, the basic hierarchy and the supplementary hierarchy being set in units of a group of pictures including an intra coded picture and a plurality of inter prediction coded pictures;
>
> transmitting basic video image coding data of the basic hierarchy, wherein the memory unit is further configured to store supplementary video image coding data of

the supplementary hierarchy for a duration time equal to or longer than the length of the group of pictures and output the supplementary video image coding data of the supplementary hierarchy in storing order.

Further, claim 9 recites:

> setting a transmission structure including a basic hierarchy and a supplementary hierarchy, the basic hierarchy and the supplementary hierarchy being set in units of a group of pictures including an intra coded picture and a plurality of inter prediction coded pictures;…
> storing supplementary video image coding data of the supplementary hierarchy for a duration time equal to or longer than the length of the group of pictures and outputting the supplementary video image coding data of the supplementary hierarchy in storing order.

Moreover, claim 10 recites:

> setting a transmission structure including a basic hierarchy and a supplementary hierarchy, the basic hierarchy and the supplementary hierarchy being set in units of a group of pictures including an intra coded picture and a plurality of inter prediction coded pictures;…
> storing supplementary video image coding data of the supplementary hierarchy for a duration time equal to or longer than the length of the group of pictures and outputting the supplementary video image coding data of the supplementary hierarchy in storing order.

Consequently, the Applicant submits that claims 1, 4, 5, 9, and 10 are patentable over the combination of Radha and Myers.

Therefore, for at least these reasons, the Applicant respectfully requests that the present rejection be reconsidered and withdrawn.

(2) On page 10, the Office Action rejected claim 6 under 35 U.S.C. § 103(a) as being unpatentable over Radha in view of Myers, and further in view of Applicant's Admitted Prior Art (AAPA). The Applicant traverses this rejection for at least the following reasons.

Claim 6 depends from claim 1 and is allowable as depending from an allowable claim.

(3) On page 10, the Office Action rejected claim 7 under 35 U.S.C. § 103(a) as being unpatentable over Radha in view of Myers, as applied above, and further in view of U.S. Patent Application Publication No. 2007/0091997 to Fogg et al. ("Fogg"). The Applicant traverses this rejection for at least the following reasons.

Claim 7 depends from claim 1 and is allowable as depending from an allowable claim.

(4) On page 11, the Office Action rejected claims 8 and 11 under 35 U.S.C. § 103(a) as being unpatentable over Radha in view of U.S. Patent No. 5,886,736 to Chen et al. (hereinafter "Chen"). The Applicant traverses this rejection for at least the following reasons.

Although of different scope than claim 1, claims 8 and 11 are also patentable over Radha for at least similar reasons provided above with respect to claim 1. Chen fails to cure the deficiencies noted above in Radha.

In particular, claim 8 recites:

> receiving supplementary video image coding data including a supplementary hierarchical picture whose coding order and display order are earlier by a factor of a group of pictures including an intra coded picture and a plurality of inter prediction coded pictures than those of a basic hierarchical picture included in the basic video image coding data, a basic hierarchy and a supplementary hierarchy being set in units of the group of pictures.

Further, claim 11 recites:

> setting a transmission structure including a basic hierarchy and a supplementary hierarchy, the basic hierarchy and the supplementary hierarchy being set in units of a group of pictures including an intra coded picture and a plurality of inter prediction coded pictures;…
> receiving the supplementary video image coding data including a supplementary hierarchical picture having coding order and display order that are

earlier by a factor of the group of pictures than those of a basic hierarchical picture included in the basic video image coding data.

Consequently, the Applicant submits that claims 8 and 11 are patentable over the combination of Radha and Chen.

Therefore, for at least these reasons, the Applicant respectfully requests that the present rejection be reconsidered and withdrawn.

Conclusion

All of the stated grounds of rejection have been properly traversed, accommodated, or rendered moot. The Applicant therefore respectfully requests that the Examiner reconsider all presently outstanding rejections and that they be withdrawn. The Applicant believes that a full and complete reply has been made to the outstanding Office Action and, as such, the present application is in condition for allowance. If the Examiner believes, for any reason, that personal communication will expedite prosecution of this application, the Examiner is hereby invited to telephone the undersigned at the number provided.

In view of the above amendment, the Applicant believes the pending application is in condition for allowance.

Dated: October 3, 2017

Respectfully submitted,

By: /Michael A. Sartori, Ph.D./
Michael A. Sartori, Ph.D.
Registration No.: 41,289
VENABLE LLP
P.O. Box 34385
Washington, DC 20043-9998
(202) 344-4000
(202) 344-8300 (Fax)
Attorney/Agent For Applicant

#18844934v1

UNITED STATES PATENT AND TRADEMARK OFFICE

UNITED STATES DEPARTMENT OF COMMERCE
United States Patent and Trademark Office
Address: COMMISSIONER FOR PATENTS
P.O. Box 1450
Alexandria, Virginia 22313-1450
www.uspto.gov

APPLICATION NO.	FILING DATE	FIRST NAMED INVENTOR	ATTORNEY DOCKET NO.	CONFIRMATION NO.
14/657,359	03/13/2015	Hideki TAKEHARA	119547-380321	3775

26694 7590 12/11/2017
VENABLE LLP
P.O. BOX 34385
WASHINGTON, DC 20043-9998

EXAMINER
HANCE, ROBERT J

ART UNIT	PAPER NUMBER
2423	

NOTIFICATION DATE	DELIVERY MODE
12/11/2017	ELECTRONIC

Please find below and/or attached an Office communication concerning this application or proceeding.

The time period for reply, if any, is set in the attached communication.

Notice of the Office communication was sent electronically on above-indicated "Notification Date" to the following e-mail address(es):

PTOMail@Venable.com
cavanhouten@venable.com

PTOL-90A (Rev. 04/07)

Office Action Summary	Application No. 14/657,359	Applicant(s) TAKEHARA et al.	
	Examiner ROBERT J HANCE	Art Unit 2423	AIA Status Yes

-- The MAILING DATE of this communication appears on the cover sheet with the correspondence address --

Period for Reply

A SHORTENED STATUTORY PERIOD FOR REPLY IS SET TO EXPIRE 3 MONTHS FROM THE MAILING DATE OF THIS COMMUNICATION.

- Extensions of time may be available under the provisions of 37 CFR 1.136(a). In no event, however, may a reply be timely filed after SIX (6) MONTHS from the mailing date of this communication.
- If NO period for reply is specified above, the maximum statutory period will apply and will expire SIX (6) MONTHS from the mailing date of this communication.
- Failure to reply within the set or extended period for reply will, by statute, cause the application to become ABANDONED (35 U.S.C. § 133). Any reply received by the Office later than three months after the mailing date of this communication, even if timely filed, may reduce any earned patent term adjustment. See 37 CFR 1.704(b).

Status

1)☑ Responsive to communication(s) filed on 10/3/17 .

☐ A declaration(s)/affidavit(s) under **37 CFR 1.130(b)** was/were filed on _____ .

2a)☑ This action is **FINAL.** 2b) ☐ This action is non-final.

3)☐ An election was made by the applicant in response to a restriction requirement set forth during the interview on _____; the restriction requirement and election have been incorporated into this action.

4)☐ Since this application is in condition for allowance except for formal matters, prosecution as to the merits is closed in accordance with the practice under *Ex parte Quayle*, 1935 C.D. 11, 453 O.G. 213.

Disposition of Claims*

5) ☑ Claim(s) 1 and 4-11 is/are pending in the application.

5a) Of the above claim(s) _____ is/are withdrawn from consideration.

6) ☑ Claim(s) 8 and 11 is/are allowed.

7) ☑ Claim(s) 1,4-7 and 9-10 is/are rejected.

8) ☐ Claim(s) _____ is/are objected to.

9) ☐ Claim(s) _____ are subject to restriction and/or election requirement

* If any claims have been determined allowable, you may be eligible to benefit from the **Patent Prosecution Highway** program at a participating intellectual property office for the corresponding application. For more information, please see http://www.uspto.gov/patents/init_events/pph/index.jsp or send an inquiry to **PPHfeedback@uspto.gov.**

Application Papers

10)☐ The specification is objected to by the Examiner.

11)☐ The drawing(s) filed on _____ is/are: a)☐ accepted or b)☐ objected to by the Examiner.

Applicant may not request that any objection to the drawing(s) be held in abeyance. See 37 CFR 1.85(a).

Replacement drawing sheet(s) including the correction is required if the drawing(s) is objected to. See 37 CFR 1.121(d).

Priority under 35 U.S.C. § 119

12)☐ Acknowledgment is made of a claim for foreign priority under 35 U.S.C. § 119(a)-(d) or (f).

Certified copies:

a)☐ All b)☐ Some** c)☐ None of the:

1.☐ Certified copies of the priority documents have been received.

2.☐ Certified copies of the priority documents have been received in Application No. _____.

3.☐ Copies of the certified copies of the priority documents have been received in this National Stage application from the International Bureau (PCT Rule 17.2(a)).

** See the attached detailed Office action for a list of the certified copies not received.

Attachment(s)

1) ☑ Notice of References Cited (PTO-892)

2) ☐ Information Disclosure Statement(s) (PTO/SB/08a and/or PTO/SB/08b) Paper No(s)/Mail Date _____.

3) ☐ Interview Summary (PTO-413) Paper No(s)/Mail Date _____.

4) ☐ Other: _____.

Notice of Pre-AIA or AIA Status

1. The present application, filed on or after March 16, 2013, is being examined under the first inventor to file provisions of the AIA.

Response to Arguments

1. Applicant's arguments have been considered but are moot because the arguments do not apply to any of the references being used in the current rejection.

Claim Rejections - 35 USC § 103

1. The following is a quotation of 35 U.S.C. 103 which forms the basis for all obviousness rejections set forth in this Office action:

> A patent for a claimed invention may not be obtained, notwithstanding that the claimed invention is not identically disclosed as set forth in section 102, if the differences between the claimed invention and the prior art are such that the claimed invention as a whole would have been obvious before the effective filing date of the claimed invention to a person having ordinary skill in the art to which the claimed invention pertains. Patentability shall not be negated by the manner in which the invention was made.

2. Claims 1, 4, 5, 9, and 10 are rejected under 35 U.S.C. 103 as being unpatentable over Radha et al., US Patent No. 6,292,512, in view of Demircin et al., US Pub No. 2006/0095944, and further in view of Tillman et al., US Patent No. 6,496,980.

As to claim 1 Radha discloses a video image coding data transmitter comprising: a processor and a memory unit having instructions stored which, when executed by the processor, cause the processor to perform operations comprising:

acquiring the transmission rate of a network (**Fig. 6: 48; col. 6 lines 28-38**);

setting a transmission structure including a basic hierarchy and a supplementary hierarchy (**Fig. 6: 48; col. 6 lines 28-38; col. 7 lines 34-46; Fig. 10 – the bit-rate of the base layer (basic hierarchy) and enhancement layer (supplementary hierarchy) are set based on measured bandwidth, thus setting the transmission structure**);

transmitting basic video image coding data of the basic hierarchy (**Fig. 6: 55; col. 8 lines 15-47**); wherein the memory unit is further configured to store supplementary video image coding data of the supplementary hierarchy and output the supplementary video image coding data of the supplementary hierarchy in storing order; transmitting the supplementary video image coding data stored in the memory unit; and controlling the transmission of the supplementary video image coding data of the supplementary hierarchy according to the transmission rate (**Fig. 6: 54; col. 7 line 38 – col. 8 line 47; Fig. 10 and its description – a plurality of enhancement layers are produced (for example by DCT, inherently involving storage in memory), and the data sent is chosen based on the measured bandwidth**).

Radha fails to disclose that the basic hierarchy and the supplemental hierarchy are sent in units of a group of pictures including an intra coded picture and a plurality of inter prediction coded pictures; and wherein a period for setting the transmission structure is changed according to at least one of the number of pictures in the supplementary hierarchy stored in the memory and the transmission rate.

However, in an analogous art, Demircin discloses a basic hierarchy and supplemental hierarchy that are sent in units of a group of pictures including an intra coded picture and a plurality of inter prediction coded pictures (**[0086]-[0088] –**

determination of delivered structure (base/enhancement) is made at the GOP level when bandwidth variability is low); and

wherein a period for setting the transmission structure is changed according to at least one of the number of pictures in the supplementary hierarchy stored in the memory and the transmission rate (**[0088] – bandwidth is estimated (transmission structure is set) for each GOP, therefore the period for setting the structure will vary based on the transmission rate**).

It would have been obvious to a skilled artisan at the time of the invention to modify the system of Radha with the teachings of Demircin, the rationale being to conserve resources by avoiding repeated bandwidth estimation when it is known that bandwidth variability is low.

The combined system of Radha and Demircin fails to disclose storing supplementary video image coding data for a duration of time equal to or longer than the length of the group of pictures.

However, in an analogous art, Tillman discloses

The combined system of Radha and Demircin fails to disclose storing supplementary video image coding data for a duration of time equal to or longer than the length of a group of pictures (**col. 9 line 58 – col. 10 line 56 – enhancement layer is stored in the buffer for up to 60 seconds, which a skilled artisan would recognize is longer than a group of pictures**).

It would have been obvious to a skilled artisan at the time of the invention to modify the system of Radha and Demircin with the teachings of Tillman, the rationale being to enable low-latency live viewing combined with higher-quality replay.

As to claim 4 see rejection of claim 1. The combined system of Radha, Demircin, and Tillman further discloses that a period for acquiring the transmission rate is changed according to the number of pictures in the supplemental hierarchy stored in the memory unit (**Demircin [0088] – bandwidth is estimated (transmission structure is set) for each GOP, therefore the period for setting the structure will vary based on the size, or number of images, in the GOP**).

As to claim 5 Radha discloses the video image coding data transmitter according to claim 1, wherein the memory unit is further configured to store instructions which, when executed by the processor, cause the processor to set a part of the area of a picture to represent the basic hierarchy and a part of the area other than the part representing the basic hierarchy to be the supplementary hierarchy (**col. 1 lines 20-35 and lines 56-63 – the residual data in the enhancement layer corresponds to data not present in the base layer, therefore is part of the area other than that represented by the base layer**).

As to claim 9 see rejection of claims 1 and 4.

As to claim 10 see rejection of claims 1, 4, and 9.

3. Claim 6 is rejected under 35 U.S.C. 103 as being unpatentable over Radha, Demircin, and Tillman, and further in view of Applicant's Admitted Prior Art (AAPA).

As to claim 6 Radha, Demircin, and Tillman fails to explicitly disclose the video image coding data transmitter according to claim 1, wherein the transmission structure setting unit sets a part of the syntax of the video image coding data to represent the basic hierarchy and a part of the syntax that is different from the part representing the basic hierarchy to represent the supplementary hierarchy.

However, AAPA discloses that this was well known in the art at the time of the invention (see Remarks, filed 02/09/2017, Applicant's failure to traverse the previous assertion of official notice). Therefore it would have been obvious to a skilled artisan to modify the system of Radha, Demircin, and Tillman to include this, the rationale being to ensure proper decoding by the receiver.

1. Claim 7 is rejected under 35 U.S.C. 103 as being unpatentable over Radha, Demircin, and Tillman, as applied above, and further in view of Fogg et al., US Pub No. 2007/0091997.

As to claim 7 Radha, Demircin, and Tillman fails to disclose the video image coding data transmitter according to claim 1, wherein the transmission structure setting unit sets a video image consisting of a luminance component to represent the basic hierarchy and a video image consisting of a color difference component to represent the supplementary hierarchy.

However, in an analogous art, Fogg discloses setting a video image consisting of a luminance component to represent a basic hierarchy and a video image consisting of a color difference component to represent a supplementary hierarchy (**[0044] – luminance data is carried in the base layer (basic hierarchy) while chrominance is carried in the enhancement layer**).

It would have been obvious to a skilled artisan at the time of the invention to modify the system of Radha, Demircin, and Tillman with the teachings of Fogg, the rationale being to enable high-quality (although monochromatic) images during periods of reduced bandwidth.

Allowable Subject Matter

2. Claims 8 and 11 are allowed.

3. The following is an examiner's statement of reasons for allowance: the closest prior art is the combination of prior art references indicated in this Office action. The prior art does not disclose, in combination with the remaining claim elements, "receiving the supplementary video image coding data including a supplementary hierarchical picture having coding order and display order that are earlier by a factor of the group of pictures than those of a basic hierarchical picture included in the basic video image coding data" as recited in claims 8 and 11.

Any comments considered necessary by applicant must be submitted no later than the payment of the issue fee and, to avoid processing delays, should preferably accompany the issue fee. Such submissions should be clearly labeled "Comments on Statement of Reasons for Allowance."

Conclusion

4. Applicant's amendment necessitated the new ground(s) of rejection presented in this Office action. Accordingly, **THIS ACTION IS MADE FINAL**. See MPEP § 706.07(a). Applicant is reminded of the extension of time policy as set forth in 37 CFR 1.136(a).

A shortened statutory period for reply to this final action is set to expire THREE MONTHS from the mailing date of this action. In the event a first reply is filed within TWO MONTHS of the mailing date of this final action and the advisory action is not mailed until after the end of the THREE-MONTH shortened statutory period, then the shortened statutory period will expire on the date the advisory action is mailed, and any extension fee pursuant to 37 CFR 1.136(a) will be calculated from the mailing date of the advisory action. In no event, however, will the statutory period for reply expire later than SIX MONTHS from the date of this final action.

5. Any inquiry concerning this communication or earlier communications from the examiner should be directed to ROBERT J HANCE whose telephone number is (571)270-5319. The examiner can normally be reached on M-F 11:00am-7:00pm ET.

Examiner interviews are available via telephone, in-person, and video conferencing using a USPTO supplied web-based collaboration tool. To schedule an interview, applicant is encouraged to use the USPTO Automated Interview Request (AIR) at http://www.uspto.gov/interviewpractice.

If attempts to reach the examiner by telephone are unsuccessful, the examiner's supervisor, Benjamin Bruckart can be reached on (571) 272-3982. The fax phone

number for the organization where this application or proceeding is assigned is 571-273-8300.

Information regarding the status of an application may be obtained from the Patent Application Information Retrieval (PAIR) system. Status information for published applications may be obtained from either Private PAIR or Public PAIR. Status information for unpublished applications is available through Private PAIR only. For more information about the PAIR system, see http://pair-direct.uspto.gov. Should you have questions on access to the Private PAIR system, contact the Electronic Business Center (EBC) at 866-217-9197 (toll-free). If you would like assistance from a USPTO Customer Service Representative or access to the automated information system, call 800-786-9199 (IN USA OR CANADA) or 571-272-1000.

/ROBERT J HANCE/
Primary Examiner, Art Unit 2423

IN THE UNITED STATES PATENT AND TRADEMARK OFFICE

In re Patent Application of: Hideki TAKEHARA et al.	Art Unit: 2423
Application No: 14/657,359	Examiner: Robert J. Hance
Confirmation No: 3775	
Filed: March 13, 2015	Atty. Docket No: 119547.380321
For: VIDEO IMAGE CODING DATA TRANSMITTER, VIDEO IMAGE CODING DATA TRANSMISSION METHOD, VIDEO IMAGE CODING DATA RECEIVER, AND VIDEO IMAGE CODING DATA TRANSMISSION AND RECEPTION SYSTEM	Customer No: 26694 PATENT & TRADEMARK OFFICE

AMENDMENT IN RESPONSE TO FINAL OFFICE ACTION

UNDER 37 C.F.R. § 1.116

MS AF
Commissioner for Patents
P.O. Box 1450
Alexandria, VA 22313-1450

Dear Commissioner:

In response to the Final Office Action dated December 11, 2017, please amend the above-identified U.S. patent application as follows:

Amendments to the Claims begin on page 2 of this paper.

Remarks begin on page 5 of this paper.

The Commissioner is authorized to charge any deficiency in any patent application processing fees pursuant to 37 C.F.R. § 1.17 associated with this communication, and to credit any excess payment, to Deposit Account No. 22-0261.

AMENDMENTS TO THE CLAIMS

Please amend the claims as follows:

1. – 7. (Cancelled)

8. (Previously Presented) A video image coding data receiver comprising:

a processor; and

a memory unit having instructions stored which, when executed by the processor, cause the processor to perform operations comprising:

receiving basic video image coding data;

decoding the received basic video image coding data so as to reproduce a video image;

receiving supplementary video image coding data including a supplementary hierarchical picture whose coding order and display order are earlier by a factor of a group of pictures including an intra coded picture and a plurality of inter prediction coded pictures than those of a basic hierarchical picture included in the basic video image coding data, a basic hierarchy and a supplementary hierarchy being set in units of the group of pictures;

acquiring basic video image coding data received before supplementary video image coding data that has been received at the moment; and

reconstructing video image coding data from the basic video image coding data and the supplementary video image coding data.

9. – 10. (Cancelled)

11. (Previously Presented) A video image coding data transmission and reception system comprising:

a video image coding data transmitter that codes and transmits a video image; and

a video image coding data receiver that receives and reconstructs video image coding data,

wherein the video image coding data transmitter includes:

a first processor; and

a first memory unit having instructions stored which, when executed by the first processor, cause the first processor to perform operations comprising:

acquiring the transmission rate of a network;

setting a transmission structure including a basic hierarchy and a supplementary hierarchy, the basic hierarchy and the supplementary hierarchy being set in units of a group of pictures including an intra coded picture and a plurality of inter prediction coded pictures;

transmitting basic video image coding data of the basic hierarchy, wherein the first memory unit is further configured to store supplementary video image coding data of the supplementary hierarchy;

transmitting the supplementary video image coding data stored in the memory unit; and

controlling the transmission of the supplementary video image coding data according to the transmission rate, and

wherein the video image coding data receiver includes:

a second processor; and

a second memory unit having instructions stored which, when executed by the second processor, cause the second processor to perform operations comprising:

receiving the basic video image coding data;

decoding the received basic video image coding data so as to reproduce a video image;

receiving the supplementary video image coding data including a supplementary hierarchical picture having coding order and display order that are earlier by a factor of the group of pictures than those of a basic hierarchical picture included in the basic video image coding data;

acquiring basic video image coding data received before supplementary video image coding data that is currently received; and

reconstructing video image coding data from the basic video image coding data and the supplementary video image coding data.

REMARKS

The Applicant thanks the Examiner for the careful consideration of this application. The Office Action dated December 11, 2017 has been received and its contents carefully considered. Claims 8 and 11 are pending in this application. Claims 2-3 were previously canceled. Claims 1, 4-7, 9, and 10 are newly canceled.

Based on the foregoing amendments and the following remarks, the Applicant respectfully requests that the Examiner reconsider all outstanding rejections and that they be withdrawn.

Allowable Subject Matter

On page 7, the Office Action states that claims 8 and 11 are allowable. The Applicant thanks the Examiner for indicating that claims 8 and 11 are allowed.

Claim Rejections under 35 U.S.C. § 103

(A) On page 2, the Office Action rejected claims 1, 4, 5, 9 and 10 under 35 U.S.C. § 103 as being unpatentable over U.S. Patent No. 6,292,512 to Radha et al. ("Radha") in view of U.S. Patent Application Publication No. 2006/0095944 to Demircin et al. ("Demircin") and further in view of U.S. Patent No. 6,496,980 to Tillman et al. ("Tillman"). The Applicant respectfully traverses these rejections.

To place application in condition allowance, claims 1, 4, 5, 9 and 10 are cancelled without prejudice or disclaimer to the subject matter recited therein. Therefore, the rejection is rendered moot.

(B) On page 6, the Office Action rejected claim 6 under 35 U.S.C. § 103 as being unpatentable over Radha, Demircin, and Tillman and further in view of Applicant's Admitted Prior Art (AAPA). The Applicant respectfully traverses this rejection.

To place application in condition allowance, claim 6 is cancelled without prejudice or disclaimer to the subject matter recited therein. Therefore, the rejection is rendered moot.

(C) On page 6, the Office Action rejected claim 7 under 35 U.S.C. § 103 as being unpatentable over Radha, Demircin, and Tillman and further in view of U.S. Patent Application Publication No. 2007/0091997 to Fogg et al. ("Fogg"). The Applicant respectfully traverses this rejection.

To place application in condition allowance, claim 7 is cancelled without prejudice or disclaimer to the subject matter recited therein. Therefore, the rejection is rendered moot.

Conclusion

All of the stated grounds of rejection have been properly traversed, accommodated, or rendered moot. The Applicant therefore respectfully requests that the Examiner reconsider all presently outstanding rejections and that they be withdrawn. The Applicant believes that a full and complete reply has been made to the outstanding Office Action and, as such, the present application is in condition for allowance. If the Examiner believes, for any reason, that personal communication will expedite prosecution of this application, the Examiner is hereby invited to telephone the undersigned at the number provided.

In view of the above amendment, applicant believes the pending application is in condition for allowance.

Dated: February 9, 2018

Respectfully submitted,

By: /Michael A. Sartori, Ph.D./
Michael A. Sartori, Ph.D.
Registration No.: 41,289
VENABLE LLP
P.O. Box 34385
Washington, DC 20043-9998
(202) 344-4000
(202) 344-8300 (Fax)
Attorney/Agent For Applicant

#18844934v1

OK TO ENTER: /R.J.H/

IN THE UNITED STATES PATENT AND TRADEMARK OFFICE

In re Patent Application of: Hideki TAKEHARA et al.	Art Unit: 2423
Application No: 14/657,359	Examiner: Robert J. Hance
Confirmation No: 3775	
Filed: March 13, 2015	Atty. Docket No: 119547.380321
For: VIDEO IMAGE CODING DATA TRANSMITTER, VIDEO IMAGE CODING DATA TRANSMISSION METHOD, VIDEO IMAGE CODING DATA RECEIVER, AND VIDEO IMAGE CODING DATA TRANSMISSION AND RECEPTION SYSTEM	Customer No: 26694 PATENT & TRADEMARK OFFICE

AMENDMENT IN RESPONSE TO FINAL OFFICE ACTION

UNDER 37 C.F.R. § 1.116

MS AF
Commissioner for Patents
P.O. Box 1450
Alexandria, VA 22313-1450

Dear Commissioner:

In response to the Final Office Action dated December 11, 2017, please amend the above-identified U.S. patent application as follows:

Amendments to the Claims begin on page 2 of this paper.

Remarks begin on page 5 of this paper.

The Commissioner is authorized to charge any deficiency in any patent application processing fees pursuant to 37 C.F.R. § 1.17 associated with this communication, and to credit any excess payment, to Deposit Account No. 22-0261.

Notice of References Cited	Application/Control No. 14/657,359	Applicant(s)/Patent Under Reexamination TAKEHARA et al.	
	Examiner ROBERT J HANCE	Art Unit 2423	Page 1 of 1

U.S. PATENT DOCUMENTS

*		Document Number Country Code-Number-Kind Code	Date MM-YYYY	Name	CPC Classification	US Classification
*	A	US-20070091997-A1	04-2007	Fogg; Chad	H04N19/56	375/240.1
*	B	US-6292512-B1	09-2001	Radha; Hayder	H04N21/6377	375/240.1
*	C	US-20050172232-A1	08-2005	Wiseman, Richard M	H04L41/069	715/718
*	D	US-6697426-B1	02-2004	Van Der Schaar; Mihaela	H04N19/61	375/240.01
*	E	US-20110082945-A1	04-2011	Myers; Robert Linwood	H04N21/234327	709/231
*	F	US-5886736-A	03-1999	Chen; Xuemin	G06T9/004	348/42
*	G	US-20080144723-A1	06-2008	Chen; Peisong	H04N19/15	375/240.26
*	H	US-20060095944-A1	05-2006	Demircin; Mehmet U.	H04N19/172	725/81
*	I	US-20060013305-A1	01-2006	Sun; Shijun	H04N19/172	375/240.12
*	J	US-20080294789-A1	11-2008	Nassor; Eric	H04N21/23406	709/231
*	K	US-6496980-B1	12-2002	Tillman; Rachel E.	H04N7/17318	348/E7.071
	L					
	M					

FOREIGN PATENT DOCUMENTS

*		Document Number Country Code-Number-Kind Code	Date MM-YYYY	Country	Name	CPC Classification
	N					
	O					
	P					
	Q					
	R					
	S					
	T					

NON-PATENT DOCUMENTS

*		Include as applicable: Author, Title Date, Publisher, Edition or Volume, Pertinent Pages)
	U	
	V	
	W	
	X	

*A copy of this reference is not being furnished with this Office action. (See MPEP § 707.05(a).)
Dates in MM-YYYY format are publication dates. Classifications may be US or foreign.

UNITED STATES PATENT AND TRADEMARK OFFICE

UNITED STATES DEPARTMENT OF COMMERCE
United States Patent and Trademark Office
Address: COMMISSIONER FOR PATENTS
P.O. Box 1450
Alexandria, Virginia 22313-1450
www.uspto.gov

NOTICE OF ALLOWANCE AND FEE(S) DUE

26694 7590 03/26/2018
VENABLE LLP
P.O. BOX 34385
WASHINGTON, DISTRICT OF COLUMBIA 20043-9998
UNITED STATES OF AMERICA

EXAMINER
HANCE, ROBERT J

ART UNIT	PAPER NUMBER
2423	

DATE MAILED: 03/26/2018

APPLICATION NO.	FILING DATE	FIRST NAMED INVENTOR	ATTORNEY DOCKET NO.	CONFIRMATION NO.
14/657,359	03/13/2015	Hideki TAKEHARA	119547-380321	3775

TITLE OF INVENTION: VIDEO IMAGE CODING DATA TRANSMITTER, VIDEO IMAGE CODING DATA TRANSMISSION METHOD, VIDEO IMAGE CODING DATA RECEIVER, AND VIDEO IMAGE CODING DATA TRANSMISSION AND RECEPTION SYSTEM

APPLN. TYPE	ENTITY STATUS	ISSUE FEE DUE	PUBLICATION FEE DUE	PREV. PAID ISSUE FEE	TOTAL FEE(S) DUE	DATE DUE
REGULAR	UNDISCOUNTED	$1000	$0.00	$0.00	$1000	06/26/2018

THE APPLICATION IDENTIFIED ABOVE HAS BEEN EXAMINED AND IS ALLOWED FOR ISSUANCE AS A PATENT. PROSECUTION ON THE MERITS IS CLOSED. THIS NOTICE OF ALLOWANCE IS NOT A GRANT OF PATENT RIGHTS. THIS APPLICATION IS SUBJECT TO WITHDRAWAL FROM ISSUE AT THE INITIATIVE OF THE OFFICE OR UPON PETITION BY THE APPLICANT. SEE 37 CFR 1.313 AND MPEP 1308.

THE ISSUE FEE AND PUBLICATION FEE (IF REQUIRED) MUST BE PAID WITHIN THREE MONTHS FROM THE MAILING DATE OF THIS NOTICE OR THIS APPLICATION SHALL BE REGARDED AS ABANDONED. THIS STATUTORY PERIOD CANNOT BE EXTENDED. SEE 35 U.S.C. 151. THE ISSUE FEE DUE INDICATED ABOVE DOES NOT REFLECT A CREDIT FOR ANY PREVIOUSLY PAID ISSUE FEE IN THIS APPLICATION. IF AN ISSUE FEE HAS PREVIOUSLY BEEN PAID IN THIS APPLICATION (AS SHOWN ABOVE), THE RETURN OF PART B OF THIS FORM WILL BE CONSIDERED A REQUEST TO REAPPLY THE PREVIOUSLY PAID ISSUE FEE TOWARD THE ISSUE FEE NOW DUE.

HOW TO REPLY TO THIS NOTICE:

I. Review the ENTITY STATUS shown above. If the ENTITY STATUS is shown as SMALL or MICRO, verify whether entitlement to that entity status still applies.

If the ENTITY STATUS is the same as shown above, pay the TOTAL FEE(S) DUE shown above.

If the ENTITY STATUS is changed from that shown above, on PART B - FEE(S) TRANSMITTAL, complete section number 5 titled "Change in Entity Status (from status indicated above)".

For purposes of this notice, small entity fees are 1/2 the amount of undiscounted fees, and micro entity fees are 1/2 the amount of small entity fees.

II. PART B - FEE(S) TRANSMITTAL, or its equivalent, must be completed and returned to the United States Patent and Trademark Office (USPTO) with your ISSUE FEE and PUBLICATION FEE (if required). If you are charging the fee(s) to your deposit account, section "4b" of Part B - Fee(s) Transmittal should be completed and an extra copy of the form should be submitted. If an equivalent of Part B is filed, a request to reapply a previously paid issue fee must be clearly made, and delays in processing may occur due to the difficulty in recognizing the paper as an equivalent of Part B.

III. All communications regarding this application must give the application number. Please direct all communications prior to issuance to Mail Stop ISSUE FEE unless advised to the contrary.

IMPORTANT REMINDER: Utility patents issuing on applications filed on or after Dec. 12, 1980 may require payment of maintenance fees. It is patentee's responsibility to ensure timely payment of maintenance fees when due.

PART B - FEE(S) TRANSMITTAL

Complete and send this form, together with applicable fee(s), to: Mail Mail Stop ISSUE FEE
Commissioner for Patents
P.O. Box 1450
Alexandria, Virginia 22313-1450
or Fax (571)-273-2885

INSTRUCTIONS: This form should be used for transmitting the ISSUE FEE and PUBLICATION FEE (if required). Blocks 1 through 5 should be completed where appropriate. All further correspondence including the Patent, advance orders and notification of maintenance fees will be mailed to the current correspondence address as indicated unless corrected below or directed otherwise in Block 1, by (a) specifying a new correspondence address; and/or (b) indicating a separate "FEE ADDRESS" for maintenance fee notifications.

CURRENT CORRESPONDENCE ADDRESS (Note: Use Block 1 for any change of address)

26694 7590 03/26/2018
VENABLE LLP
P.O. BOX 34385
WASHINGTON, DISTRICT OF COLUMBIA 20043-9998
UNITED STATES OF AMERICA

Note: A certificate of mailing can only be used for domestic mailings of the Fee(s) Transmittal. This certificate cannot be used for any other accompanying papers. Each additional paper, such as an assignment or formal drawing, must have its own certificate of mailing or transmission.

Certificate of Mailing or Transmission

I hereby certify that this Fee(s) Transmittal is being deposited with the United States Postal Service with sufficient postage for first class mail in an envelope addressed to the Mail Stop ISSUE FEE address above, or being facsimile transmitted to the USPTO (571) 273-2885, on the date indicated below.

(Depositor's name)
(Signature)
(Date)

APPLICATION NO.	FILING DATE	FIRST NAMED INVENTOR	ATTORNEY DOCKET NO.	CONFIRMATION NO.
14/657,359	03/13/2015	Hideki TAKEHARA	119547-380321	3775

TITLE OF INVENTION: VIDEO IMAGE CODING DATA TRANSMITTER, VIDEO IMAGE CODING DATA TRANSMISSION METHOD, VIDEO IMAGE CODING DATA RECEIVER, AND VIDEO IMAGE CODING DATA TRANSMISSION AND RECEPTION SYSTEM

APPLN. TYPE	ENTITY STATUS	ISSUE FEE DUE	PUBLICATION FEE DUE	PREV. PAID ISSUE FEE	TOTAL FEE(S) DUE	DATE DUE
REGULAR	UNDISCOUNTED	$1000	$0.00	$0.00	$1000	06/26/2018

EXAMINER	ART UNIT	CLASS-SUBCLASS
HANCE, ROBERT J	2423	375-240020

1. Change of correspondence address or indication of "Fee Address" (37 CFR 1.363).

❑ Change of correspondence address (or Change of Correspondence Address form PTO/SB/122) attached.

❑ "Fee Address" indication (or "Fee Address" Indication form PTO/SB/47; Rev 03-02 or more recent) attached. **Use of a Customer Number is required.**

2. For printing on the patent front page, list
(1) The names of up to 3 registered patent attorneys or agents OR, alternatively,
(2) The name of a single firm (having as a member a registered attorney or agent) and the names of up to 2 registered patent attorneys or agents. If no name is listed, no name will be printed.

1_____
2_____
3_____

3. ASSIGNEE NAME AND RESIDENCE DATA TO BE PRINTED ON THE PATENT (print or type)

PLEASE NOTE: Unless an assignee is identified below, no assignee data will appear on the patent. If an assignee is identified below, the document has been filed for recordation as set forth in 37 CFR 3.11. Completion of this form is NOT a substitute for filing an assignment.

(A) NAME OF ASSIGNEE (B) RESIDENCE: (CITY and STATE OR COUNTRY)

Please check the appropriate assignee category or categories (will not be printed on the patent) : ❑ Individual ❑ Corporation or other private group entity ❑ Government

4a. The following fee(s) are submitted:

❑ Issue Fee

❑ Publication Fee (No small entity discount permitted)

❑ Advance Order - # of Copies _____

4b. Payment of Fee(s): **(Please first reapply any previously paid issue fee shown above)**

❑ A check is enclosed.

❑ Payment by credit card. Form PTO-2038 is attached.

❑ The director is hereby authorized to charge the required fee(s), any deficiency, or credits any overpayment, to Deposit Account Number _____ (enclose an extra copy of this form).

5. **Change in Entity Status** (from status indicated above)

❑ Applicant certifying micro entity status. See 37 CFR 1.29

❑ Applicant asserting small entity status. See 37 CFR 1.27

❑ Applicant changing to regular undiscounted fee status.

NOTE: Absent a valid certification of Micro Entity Status (see forms PTO/SB/15A and 15B), issue fee payment in the micro entity amount will not be accepted at the risk of application abandonment.
NOTE: If the application was previously under micro entity status, checking this box will be taken to be a notification of loss of entitlement to micro entity status.
NOTE: Checking this box will be taken to be a notification of loss of entitlement to small or micro entity status, as applicable.

NOTE: This form must be signed in accordance with 37 CFR 1.31 and 1.33. See 37 CFR 1.4 for signature requirements and certifications.

Authorized Signature _____ Date _____

Typed or printed name _____ Registration No. _____

UNITED STATES PATENT AND TRADEMARK OFFICE

UNITED STATES DEPARTMENT OF COMMERCE
United States Patent and Trademark Office
Address: COMMISSIONER FOR PATENTS
P.O. Box 1450
Alexandria, Virginia 22313-1450
www.uspto.gov

APPLICATION NO.	FILING DATE	FIRST NAMED INVENTOR	ATTORNEY DOCKET NO.	CONFIRMATION NO.
14/657,359	03/13/2015	Hideki TAKEHARA	119547-380321	3775

26694 7590 03/26/2018
VENABLE LLP
P.O. BOX 34385
WASHINGTON, DISTRICT OF COLUMBIA 20043-9998
UNITED STATES OF AMERICA

EXAMINER
HANCE, ROBERT J

ART UNIT	PAPER NUMBER
2423	

DATE MAILED: 03/26/2018

PTOL-85 (Rev. 02/11)

OMB Clearance and PRA Burden Statement for PTOL-85 Part B

The Paperwork Reduction Act (PRA) of 1995 requires Federal agencies to obtain Office of Management and Budget approval before requesting most types of information from the public. When OMB approves an agency request to collect information from the public, OMB (i) provides a valid OMB Control Number and expiration date for the agency to display on the instrument that will be used to collect the information and (ii) requires the agency to inform the public about the OMB Control Number's legal significance in accordance with 5 CFR 1320.5(b).

The information collected by PTOL-85 Part B is required by 37 CFR 1.311. The information is required to obtain or retain a benefit by the public which is to file (and by the USPTO to process) an application. Confidentiality is governed by 35 U.S.C. 122 and 37 CFR 1.14. This collection is estimated to take 12 minutes to complete, including gathering, preparing, and submitting the completed application form to the USPTO. Time will vary depending upon the individual case. Any comments on the amount of time you require to complete this form and/or suggestions for reducing this burden, should be sent to the Chief Information Officer, U.S. Patent and Trademark Office, U.S. Department of Commerce, P.O. Box 1450, Alexandria, Virginia 22313-1450. DO NOT SEND FEES OR COMPLETED FORMS TO THIS ADDRESS. SEND TO: Commissioner for Patents, P.O. Box 1450, Alexandria, Virginia 22313-1450. Under the Paperwork Reduction Act of 1995, no persons are required to respond to a collection of information unless it displays a valid OMB control number.

Privacy Act Statement

The Privacy Act of 1974 (P.L. 93-579) requires that you be given certain information in connection with your submission of the attached form related to a patent application or patent. Accordingly, pursuant to the requirements of the Act, please be advised that: (1) the general authority for the collection of this information is 35 U.S.C. 2(b)(2); (2) furnishing of the information solicited is voluntary; and (3) the principal purpose for which the information is used by the U.S. Patent and Trademark Office is to process and/or examine your submission related to a patent application or patent. If you do not furnish the requested information, the U.S. Patent and Trademark Office may not be able to process and/or examine your submission, which may result in termination of proceedings or abandonment of the application or expiration of the patent.

The information provided by you in this form will be subject to the following routine uses:

1. The information on this form will be treated confidentially to the extent allowed under the Freedom of Information Act (5 U.S.C. 552) and the Privacy Act (5 U.S.C 552a). Records from this system of records may be disclosed to the Department of Justice to determine whether disclosure of these records is required by the Freedom of Information Act.
2. A record from this system of records may be disclosed, as a routine use, in the course of presenting evidence to a court, magistrate, or administrative tribunal, including disclosures to opposing counsel in the course of settlement negotiations.
3. A record in this system of records may be disclosed, as a routine use, to a Member of Congress submitting a request involving an individual, to whom the record pertains, when the individual has requested assistance from the Member with respect to the subject matter of the record.
4. A record in this system of records may be disclosed, as a routine use, to a contractor of the Agency having need for the information in order to perform a contract. Recipients of information shall be required to comply with the requirements of the Privacy Act of 1974, as amended, pursuant to 5 U.S.C. 552a(m).
5. A record related to an International Application filed under the Patent Cooperation Treaty in this system of records may be disclosed, as a routine use, to the International Bureau of the World Intellectual Property Organization, pursuant to the Patent Cooperation Treaty.
6. A record in this system of records may be disclosed, as a routine use, to another federal agency for purposes of National Security review (35 U.S.C. 181) and for review pursuant to the Atomic Energy Act (42 U.S.C. 218(c)).
7. A record from this system of records may be disclosed, as a routine use, to the Administrator, General Services, or his/her designee, during an inspection of records conducted by GSA as part of that agency's responsibility to recommend improvements in records management practices and programs, under authority of 44 U.S.C. 2904 and 2906. Such disclosure shall be made in accordance with the GSA regulations governing inspection of records for this purpose, and any other relevant (i.e., GSA or Commerce) directive. Such disclosure shall not be used to make determinations about individuals.
8. A record from this system of records may be disclosed, as a routine use, to the public after either publication of the application pursuant to 35 U.S.C. 122(b) or issuance of a patent pursuant to 35 U.S.C. 151. Further, a record may be disclosed, subject to the limitations of 37 CFR 1.14, as a routine use, to the public if the record was filed in an application which became abandoned or in which the proceedings were terminated and which application is referenced by either a published application, an application open to public inspection or an issued patent.
9. A record from this system of records may be disclosed, as a routine use, to a Federal, State, or local law enforcement agency, if the USPTO becomes aware of a violation or potential violation of law or regulation.

Notice of Allowability	Application No. 14/657,359	Applicant(s) TAKEHARA et al.	
	Examiner ROBERT J HANCE	Art Unit 2423	AIA Status Yes

-- The MAILING DATE of this communication appears on the cover sheet with the correspondence address--

All claims being allowable, PROSECUTION ON THE MERITS IS (OR REMAINS) CLOSED in this application. If not included herewith (or previously mailed), a Notice of Allowance (PTOL-85) or other appropriate communication will be mailed in due course. **THIS NOTICE OF ALLOWABILITY IS NOT A GRANT OF PATENT RIGHTS.** This application is subject to withdrawal from issue at the initiative of the Office or upon petition by the applicant. See 37 CFR 1.313 and MPEP 1308.

1. ☑ This communication is responsive to 2/9/18.
   ☐ A declaration(s)/affidavit(s) under **37 CFR 1.130(b)** was/were filed on _____.

2. ☐ An election was made by the applicant in response to a restriction requirement set forth during the interview on _____; the restriction requirement and election have been incorporated into this action.

3. ☑ The allowed claim(s) is/are 8 and 11 . As a result of the allowed claim(s), you may be eligible to benefit from the **Patent Prosecution Highway** program at a participating intellectual property office for the corresponding application. For more information , please see **http://www.uspto.gov/patents/init_events/pph/index.jsp** or send an inquiry to **PPHfeedback@uspto.gov.**

4. ☑ Acknowledgment is made of a claim for foreign priority under 35 U.S.C. § 119(a)-(d) or (f).

   Certified copies:

   a) ☑ All b) ☐ Some *c) ☐ None of the:

   1. ☑ Certified copies of the priority documents have been received.
   2. ☐ Certified copies of the priority documents have been received in Application No. _____ .
   3. ☐ Copies of the certified copies of the priority documents have been received in this national stage application from the International Bureau (PCT Rule 17.2(a)).

   * Certified copies not received: _____ .

Applicant has THREE MONTHS FROM THE "MAILING DATE" of this communication to file areply complying with the requirements noted below. Failure to timely comply will result in ABANDONMENT of this application.
THIS THREE-MONTH PERIOD IS NOT EXTENDABLE.

5. ☐ CORRECTED DRAWINGS (as "replacement sheets") must be submitted.
   ☐ including changes required by the attached Examiner's Amendment / Comment or in the Office action of Paper No./Mail Date _____ .

   Identifying indicia such as the application number (see 37 CFR 1.84(c)) should be written on the drawings in the front (not the back) of each sheet. Replacement sheet(s) should be labeled as such in the header according to 37 CFR 1.121(d).

6. ☐ DEPOSIT OF and/or INFORMATION about the deposit of BIOLOGICAL MATERIAL must be submitted. Note the attached Examiner's comment regarding REQUIREMENT FOR THE DEPOSIT OF BIOLOGICAL MATERIAL.

Attachment(s)

1. ☑ Notice of References Cited (PTO-892)
2. ☐ Information Disclosure Statements (PTO/SB/08), Paper No./Mail Date _____.
3. ☐ Examiner's Comment Regarding Requirement for Deposit of Biological Material _____.
4. ☐ Interview Summary (PTO-413), Paper No./Mail Date. _____.
5. ☐ Examiner's Amendment/Comment
6. ☑ Examiner's Statement of Reasons for Allowance
7. ☐ Other _____.

/ROBERT J HANCE/
Primary Examiner, Art Unit 2423

DETAILED ACTION

Notice of Pre-AIA or AIA Status

1. The present application, filed on or after March 16, 2013, is being examined under the first inventor to file provisions of the AIA.

Allowable Subject Matter

2. Claims 8 and 11 are allowed.

3. The following is an examiner's statement of reasons for allowance: the reasons for allowance were given in the Office action mailed 12/11/2017.

Any comments considered necessary by applicant must be submitted no later than the payment of the issue fee and, to avoid processing delays, should preferably accompany the issue fee. Such submissions should be clearly labeled "Comments on Statement of Reasons for Allowance."

Conclusion

4. Any inquiry concerning this communication or earlier communications from the examiner should be directed to ROBERT J HANCE whose telephone number is (571)270-5319. The examiner can normally be reached on M-F 11:00am-7:00pm ET.

Examiner interviews are available via telephone, in-person, and video conferencing using a USPTO supplied web-based collaboration tool. To schedule an interview, applicant is encouraged to use the USPTO Automated Interview Request (AIR) at http://www.uspto.gov/interviewpractice.

If attempts to reach the examiner by telephone are unsuccessful, the examiner's supervisor, Benjamin Bruckart can be reached on (571) 272-3982. The fax phone number for the organization where this application or proceeding is assigned is 571-273-8300.

Information regarding the status of an application may be obtained from the Patent Application Information Retrieval (PAIR) system. Status information for published applications may be obtained from either Private PAIR or Public PAIR. Status information for unpublished applications is available through Private PAIR only. For more information about the PAIR system, see http://pair-direct.uspto.gov. Should you have questions on access to the Private PAIR system, contact the Electronic Business Center (EBC) at 866-217-9197 (toll-free). If you would like assistance from a USPTO Customer Service Representative or access to the automated information system, call 800-786-9199 (IN USA OR CANADA) or 571-272-1000.

/ROBERT J HANCE/
Primary Examiner, Art Unit 2423

UNITED STATES PATENT AND TRADEMARK OFFICE

UNITED STATES DEPARTMENT OF COMMERCE
United States Patent and Trademark Office
Address: COMMISSIONER FOR PATENTS
P.O. Box 1450
Alexandria, Virginia 22313-1450
www.uspto.gov

APPLICATION NO.	ISSUE DATE	PATENT NO.	ATTORNEY DOCKET NO.	CONFIRMATION NO.
14/657,359	05/29/2018	9986303	119547-380321	3775

26694 7590 05/09/2018
VENABLE LLP
P.O. BOX 34385
WASHINGTON, DC 20043-9998

ISSUE NOTIFICATION

The projected patent number and issue date are specified above.

Determination of Patent Term Adjustment under 35 U.S.C. 154 (b)
(application filed on or after May 29, 2000)

The Patent Term Adjustment is 157 day(s). Any patent to issue from the above-identified application will include an indication of the adjustment on the front page.

If a Continued Prosecution Application (CPA) was filed in the above-identified application, the filing date that determines Patent Term Adjustment is the filing date of the most recent CPA.

Applicant will be able to obtain more detailed information by accessing the Patent Application Information Retrieval (PAIR) WEB site (http://pair.uspto.gov).

Any questions regarding the Patent Term Extension or Adjustment determination should be directed to the Office of Patent Legal Administration at (571)-272-7702. Questions relating to issue and publication fee payments should be directed to the Application Assistance Unit (AAU) of the Office of Data Management (ODM) at (571)-272-4200.

APPLICANT(s) (Please see PAIR WEB site http://pair.uspto.gov for additional applicants):

Hideki TAKEHARA, Yokohama-shi, JAPAN;
JVC KENWOOD Corporation, Yokohama-shi, JAPAN;
Motoharu UEDA, Yokohama-shi, JAPAN;

The United States represents the largest, most dynamic marketplace in the world and is an unparalleled location for business investment, innovation, and commercialization of new technologies. The USA offers tremendous resources and advantages for those who invest and manufacture goods here. Through SelectUSA, our nation works to encourage and facilitate business investment. To learn more about why the USA is the best country in the world to develop technology, manufacture products, and grow your business, visit SelectUSA.gov.

IR103 (Rev. 10/09)