Exhibit 1006

Metso Minerals Industries, Inc.
240 Arch Street, P.O. Box 15312
York, Pennsylvania , USA 17405-7312
Phone: + 1 717 843 8671
Fax: +1 717 845 5154

www.metsominerals.com
E-mail: mineralsprocessing.info@metso.com

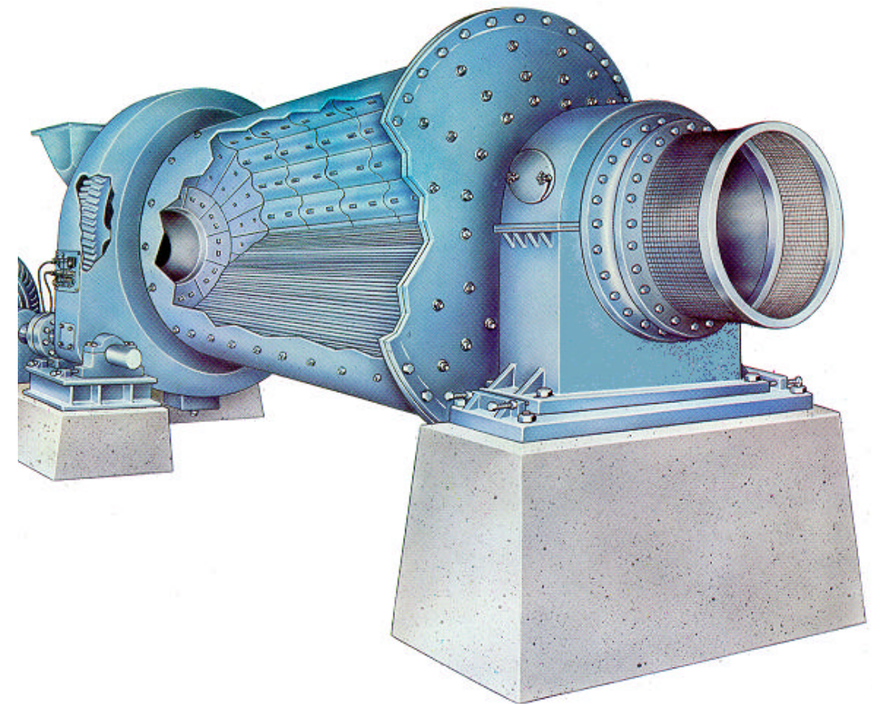

www.metsominerals.com

Rod Mill

metso minerals
linking innovations™

Brochure No. 2060 02-02

metso minerals

Exhibit 1006
FLS v. Metso

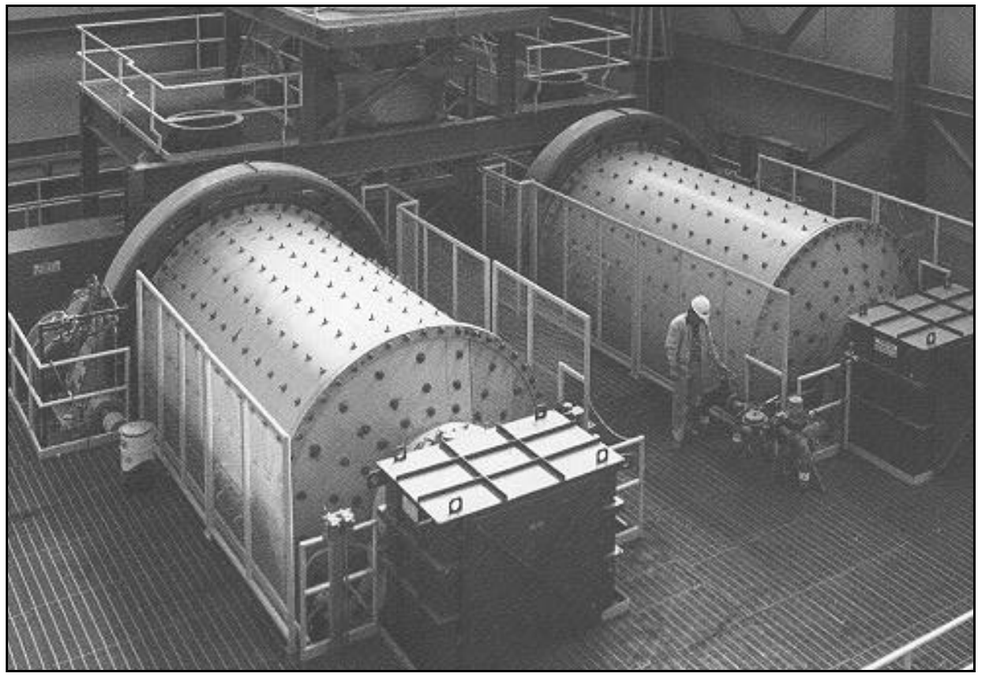

Grinding of materials in a tumbling mill with the presence of metallic balls or other media dates back to the late 1800's. Since that time, Metso Minerals and its predecessor companies have designed and manufactured over 8,000 grinding mills. Our rod mills have been manufactured since 1925.

Applications

The rod mill, a tumbling mill characterized by the use of rods as grinding media, grinds ores, coal/coke, and other materials for both wet and dry applications.

The rod mill accepts feed ore as coarse as 1 1/2" top size although better performance is obtained by restricting ore feed size to 3/4". Product sizes range from 4 mesh to 16 mesh operating in open circuit, or as fine as 35 mesh operating in closed circuit with a screen or other sizing device.

Materials too wet for fine crushing and dry screening may be wet ground in a rod mill. Practice has demonstrated the ability of a rod mill to dry grind damp materials that will pack or plug other grinding equipment.

Wet Grinding Rod Mills

Historically, rod mills have been used as the first grinding stage after crushing in mineral beneficiation circuits. The rod mill product was further ground in ball mills before separation of valuable minerals from the host rock. With the advent of semi-autogenous (SAG) mills replacing secondary and tertiary crushing as well as first stage grinding, the rod mill has fallen out of favor for new large mineral beneficiation circuits.

A recent application for a trunnion overflow rod mill is in the preparation of coal and petroleum coke slurries for Integrated Gasification Combined Cycle electric power generation and co-generation facilities. The relatively coarse open circuit rod mill product, plus the ability to not generate excess fines, is key to making a high percent solids, low viscosity slurry capable of being pumped directly into the gasification reactor vessel. This service has been proven to be an excellent application for the traditional design rod mill.

Wave Type Mill Liners

Mill Liners

Among the cast materials used for linings are Ni-Hard, chrome-molybdenum steel, and manganese steel. Rolled alloy steel plate with lifter bars is available.

Rod mill liners are subjected to severe impact. Premature breakage and scrap loss are reduced by correct selection of liners for the specific grinding duty. Additional benefit results from use of a backing material, such as rubber between the liners and the mill shell.

Wedge Bar Or Lifter Bar Mill Liners

Lorain Rolled Steel Mill Liners

Exhibit 1006
FLS v. Metso

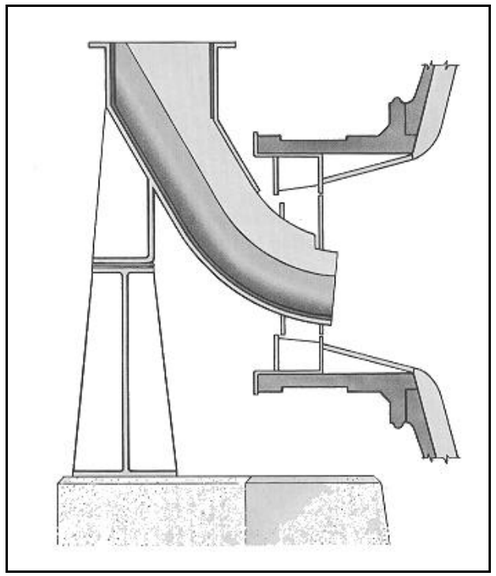

Chute or Spout Feeder

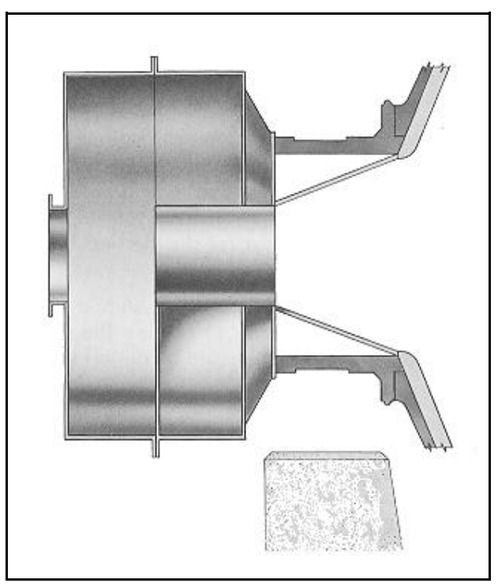

Drum Feeder

Product Design Features

Metso Rod Mills are built in sizes from 3' to 14' shell diameter with shell lengths 1 1/2 to 2 1/2 times the diameter, depending on upon the mill diameter and the application.

High carbon steel rods varying from 1 1/2" to 4 1/2" in diameter, as required for the specific grinding application, extend the full working length of the cylindrical mill section. The optimum rod charge typically occupies 35% of the internal shell volume for most grinding applications.

The conical heads attached to the ends of the cylindrical shell section are provided with hollow trunnions of large diameter and narrow width for supporting the shell in suitable bearings.

New feed is introduced through a feed chute or drum feeder attached to one of the hollow trunnions. The product is discharged through a suitable opening in the opposite trunnion or through ports in the periphery of the mill shell. The trunnion, end peripheral and center peripheral discharge arrangements are illustrated on the opposite page.

Trunnion discharge mills are equipped with a replaceable liner in the discharge trunnion and a discharge spout attached to the trunnion so that the pulp or dry product is discharged away from the trunnion bearing. A single surface trommel screen or a splitter for distributing the pulp to two or more launders is often attached to the discharge trunnion.

Mills operating with a peripheral discharge are supplied with stationary plate steel housing to confine the material and discharge it through a bottom opening. Dry grinding mills are arranged so that dust can be vented into a dust collecting system.

Discharge Arrangements

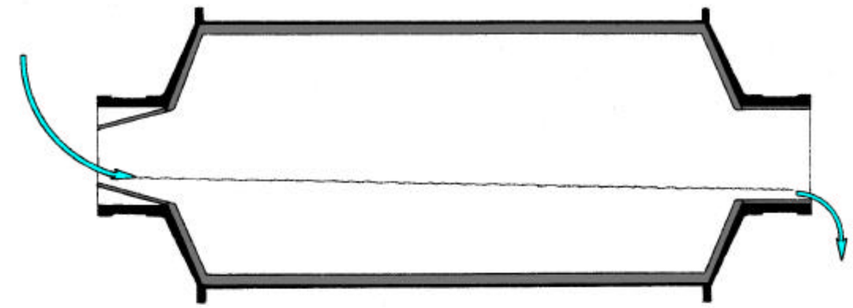

Trunnion Discharge

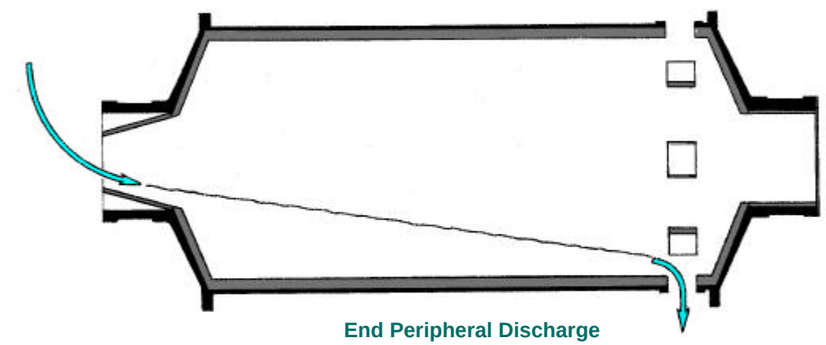

End Peripheral Discharge

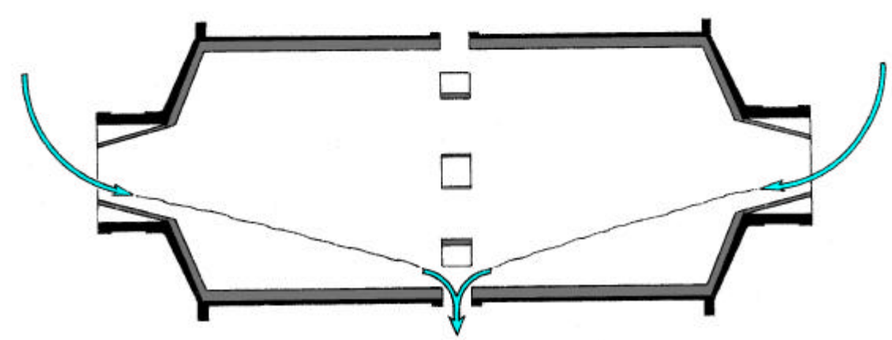

Center Peripheral Discharge

Exhibit 1006
FLS v. Metso

Bearings

Trunnions and trunnion bearings design receive special attention. Hydrodynamic oil lubrication is generally used for Rod Mills equipped with the trunnion bearings 40” diameter or smaller. Larger sizes are arranged for full hydrostatic oil lubrication.

Auxiliary high pressure starting lubricators are available for bearings lubricated by hydrodynamic action. Hydrostatic lubrication systems for bearings are complete with high pressure pumps, heat exchangers, filters, and pressure and flow safeguards.

Pinion shafts are supported in roller bearings assembled on a unit base plate. Grease or oil lubrication is provided. Oil lubricated bearings may be connected with the oil circulating system used with the main bearings to provide a continuous flow of filtered and cooled oil.

Hydrodynamic Bearing Lubricating System

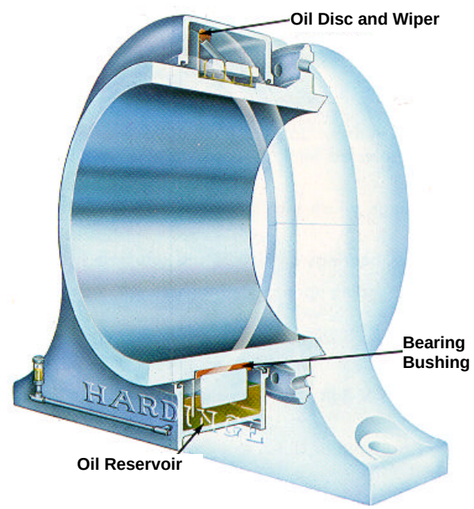

Hydrostatic Bearing Lubricating System

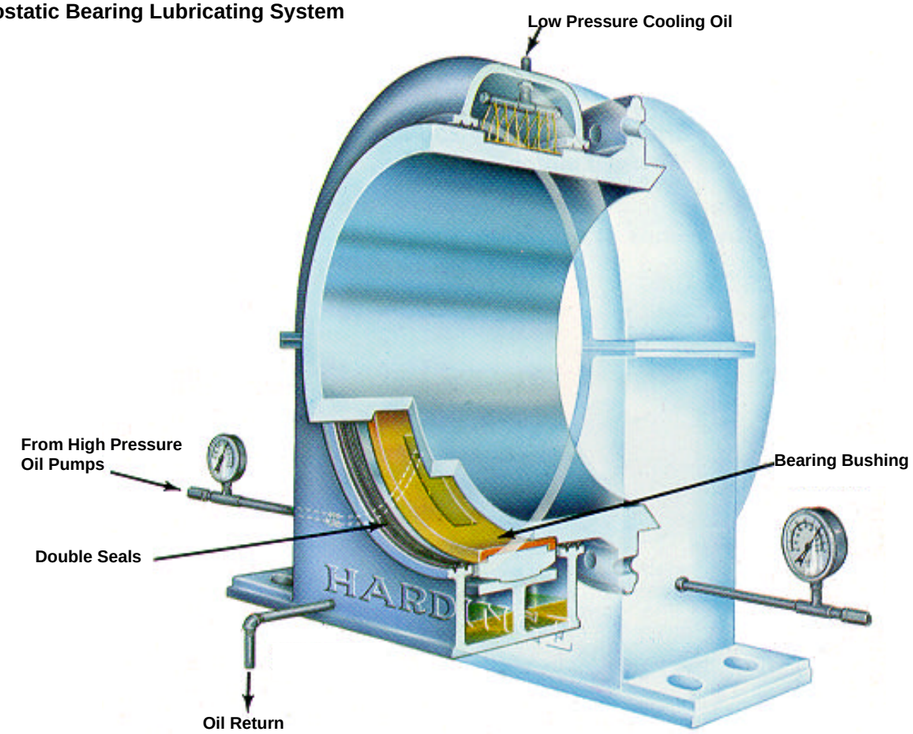

Dry Grinding Rod Mills

End peripheral discharge rod mills are used most frequently for dry grinding operations. Grinding damp materials to moderately coarse products in open circuit is feasible by using hot air, inert gas, or combustion gases to air-sweep the rod mill.

A recent new application for the end peripheral discharge rod mills has been the preparation of fuel for Circulating Bed Boilers (CFB). It is critical to have a coarse product with the fewest amount of fines for this product as the fuel mass must be fluidized by combustion airflow. This same airflow will elutriate excess fines from the fuel mass before combustion is complete and reduce boiler efficiency through loss of the fuel fines with the ash.

The very low abrasion characteristics of the rod mill make it an excellent choice when burning highly abrasive coal waste material in CFB’s.

Other important dry grinding rod mill applications include milling of metallurgical coke for ore sintering plants, damp cinders for the manufacture of cinder blocks, calcined coke for electrode manufacture, slica sand and hydrated lime mixtures prior to pressing into sand-lime brick, as well as grinding ferrochrome, ferromanganese, limestone, and various metallic slags.

Rod Mill Grinding Action

When the mill is rotated without feed or with very fine feed, the rods are in parallel alignment and in contact with one another for their full length. New feed entering at one end of the mill causes the rod charge to spread at that end. This produces a series of wedge shaped slots tapering toward the discharge end.

The tumbling and rolling rods expend most of their crushing force on the coarse fractions of the feed material and only to a lesser degree on the finer material filling the interstices in the rod charge. The horizontal progression of material through the mill is not rapid compared to the movement of the rods and material resulting from rotation of the mill. The average particle is subjected to an action similar to many sets of rolls in series, before it is discharged. Because of this, the rod mill can effectively reduce 1” feed size to 10 mesh or finer in open circuit.

The “voids” (or interstitial space) within a rod load are approximately half those in a ball mill grinding load. Rods in place weigh approximately 400 pounds per cu. ft. and balls in place approximately 300 pounds per cu. ft.. Thus, quantitatively, less material can progress through the voids in the rod mill grinding media than in the ball mill, and the path of the material is more confined. This grinding action restricts the volume of feed which passes through the mill, without causing an overload condition.

The conical or convex head of our Rod Mill forms a receiving pocket at the feed end which facilitates

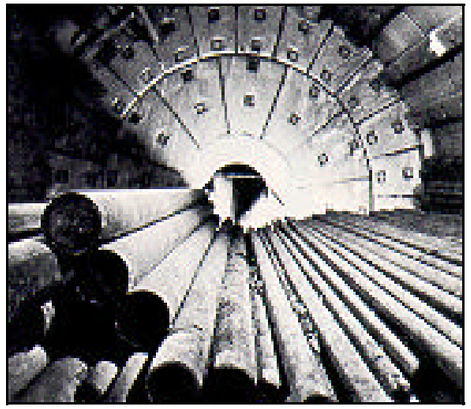

entrance of the feed to the grinding charge uniformly. This permits maximum grinding efficiency at the maximum rate possible before an overload occurs. In addition, this type of head construction permits the use of rods the full mill shell length, and reduces wear on the end liners.

The discharge end pocket receives and readily discharges broken rod pieces which otherwise may remain in the rod charge and reduce grinding effectiveness.

Vertical feed or discharge end liners may be substituted for the conical liners, when and if desired.