Exhibit 1009

Vol. 75 — No. 841

MAY 1982

CIM BULLETIN

THE CANADIAN MINING AND METALLURGICAL BULLETIN

2nd Technical Conference on Western Canadian Coals

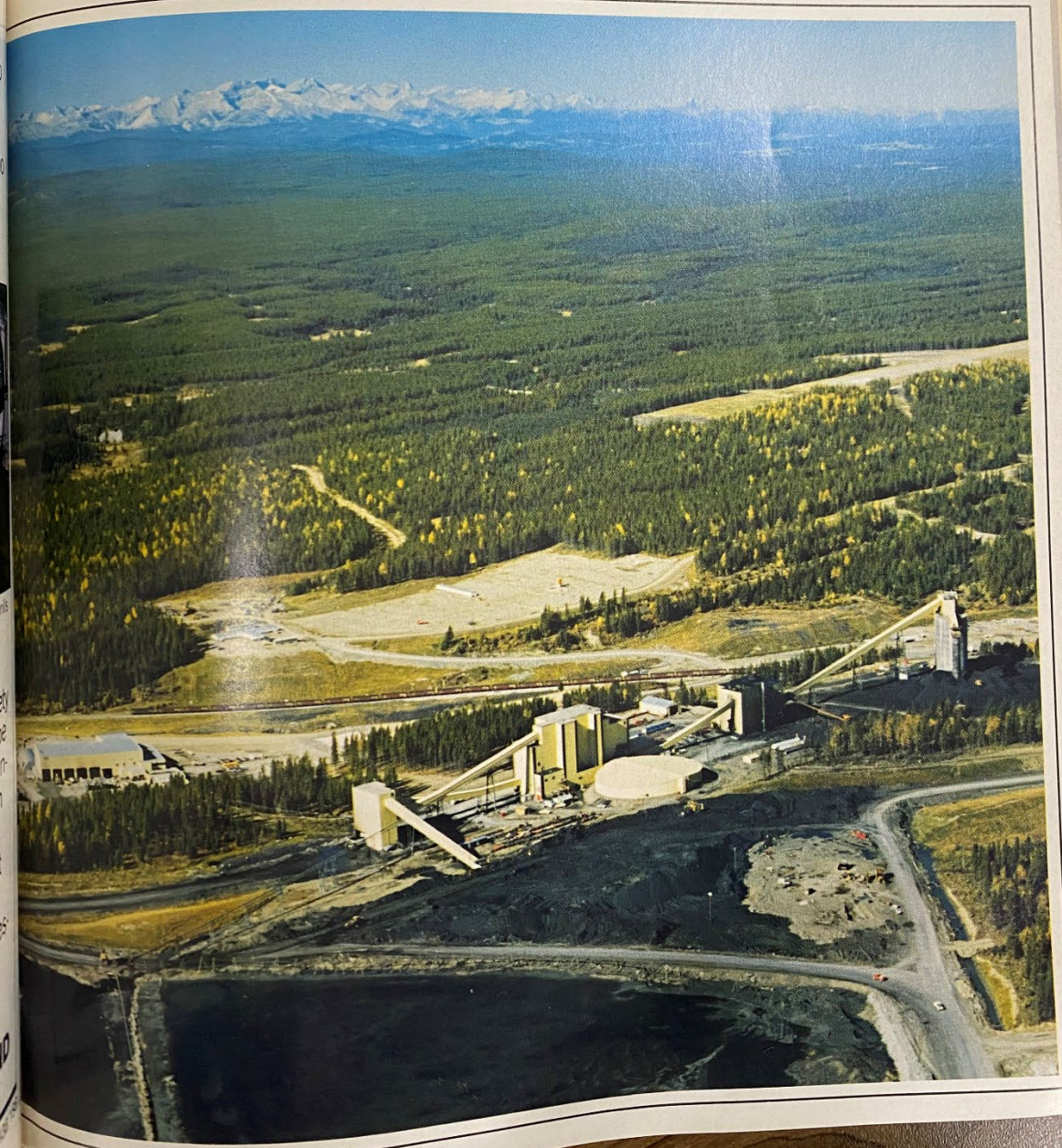

Exhibit 1009
FLS v. Metso

Editor-in-Chief:
J. I. McGERRIGLE

Production Coordinator:
L. KELLER

Editorial Assistants:
P. GANTZ, A. BALKO, and K. SMITH
L. BATTISTA (typesetting)

Publisher:
G. F. SKILLING, Executive Director, The Canadian Institute of Mining and Metallurgy

PUBLICATIONS COMMITTEE
W.H. ACKHURST (Chairman)
J. ROBERTSON (Secretary)
W.C. AALDERS
C.D. BANKS
R.M. BUCHANAN
D.E. PICKETT
and, ex-officio:
J.I. McGERRIGLE
R. SANDERSON
G.F. SKILLING

BULLETIN COMMITTEE
W.H. ACKHURST (Chairman)
J. ROBERTSON (Secretary)
R.H. GRAY
J.W. MacLEOD
G. VAN WEERT
and the representatives of the Technical Divisions/Societies

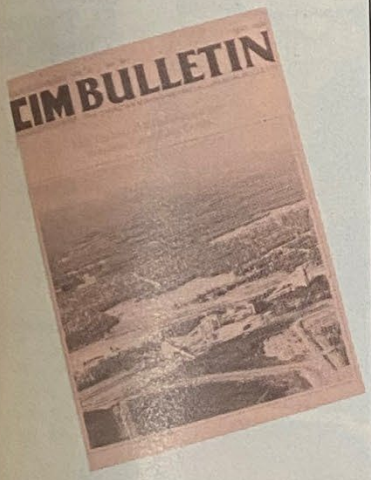

THIS MONTH'S COVER
Coal Valley mine site of Luscar Sterco (1977) Ltd.

Published by The Canadian Institute of Mining and Metallurgy, 400-1130 Sherbrooke St. West, Montreal, Que., H3A 2M8. Phone: (514)-842-3461.

Copyright: 1928, all rights reserved.

Authorized: postage paid in cash at second-class rate—Registration No. 3706. Postage paid at Gardenvale, Quebec. Return postage guaranteed.

Dépot légal: Bibliothèque nationale du Québec.

International Standard Serial Number (ISSN): 0317-0926.

The Institute, as a body, is not responsible for statements made or opinions advanced either in articles or in any discussion appearing in its publications.

CIM BULLETIN

[THE CANADIAN MINING AND METALLURGICAL BULLETIN]

VOLUME 75, NUMBER 841 MAY 1982

CIM Activities

17 Mechanical-Electrical Newsletter
17 Geology Division Newsletter
18 Coal Division Newsletter

Forum

24 Polymetallic sulphide deposits on ocean ridges; *R.D. Bornhold, G.A. Gross* and *C.R.McLeod*, Geological Survey of Canada, and *D.W. Pasho*, Energy, Mines and Resources Canada

Personality Profile

33 An interview with *Bill Irwin*, Conference Chairman of the 2nd Technical Conference on Western Canadian Coals

Operating Techniques

48 Improved roof support system developed in diversion tunnels
50 New coal anti-freeze improves coal flowability properties, prevents hard ice crystal formation, eased coal unloading
57 Level monitoring system checks up to 64 points; displays material levels in hoppers, bins or vessels
56 Research in Western Canadian coal could enhance exports
57 New method for calculating maximum speed of roller bearings

Program

59 2nd Technical Conference on Western Canadian Coals; June 2-4, 1982, University of Alberta, Edmonton

News Briefs

89 Course on practical geostatistics
102 Congrès annuel de la SEEQ
104 1982 Canadian peat symposium
104 MAPAO holds 51st annual meeting
109 APEO names new slate of officers

Metallurgical Items

111 Historical Metallurgy: Roman lead plumbing: did it really contribute to the decline and fall of the Empire?

Departments

8 Bulletin Preview
12 CIM Information
14 Meetings Calendar
21 Fifty Years Ago
30 Members in the Spotlight
42 CIM Branch Reports
142 CIM Enrolments
143 Applications for Enrolment
144 Changes of Address
146 Employment Service
147 Career Opportunities
150 Equipment for Industry

Exhibit 1009
FLS v. Metso

DIVISIONS/SOCIETIES

Coal Division
A.W.T. GRIMLEY (Chairman)
J. COADY MARSH (Vice-Chairman)
T.E. TIBBETTS (Secretary)
T.E. TIBBETTS (Publications)
G. TAYLOR (Bulletin)

Geology Division
D.W.T. POLLOCK (Chairman)
R. DARLING (Vice-Chairman)
A.E. BOERNER (Secretary)
R.W. HODDER (Publications)
R.W. HODDER (Bulletin)

Industrial Minerals Division
W.N. HAMILTON (Chairman)
C. PARE (Vice-Chairman)
R.M. BUCHANAN (Secretary)
R.M. BUCHANAN (Publications)
R.M. BUCHANAN (Bulletin)

Mechanical-Electrical Division
V.B. COOK (Chairman)
G.C. ATKINSON(Vice-Chairman)
W.W. MASSON (Secretary)
D. ROSS (Publications)
D. ROSS (Bulletin)

Metallurgical Society
C.R. MASSON (President)
P. STUBBS (Vice-President)
P. MACKEY(Secretary)
D.E. PICKETT (Publications)
J.M. TOGURI (Editorial Board)

Metal Mining Division
J.M. SMITH (Chairman)
G.H. ESPLEY (Vice-Chairman)
M. ANDERSEN (Secretary)
R.J.R. WELWOOD (Publications)
R.J.R. WELWOOD (Bulletin)

Mineral Processors Division
C. CHAPMAN (Chairman)
E.W. CUNNINGHAM (Vice-Chairman)
L. SIROIS (Secretary)
R.W. BRUCE (Bulletin)

Petroleum Society
D.J. SANDMEYER (Chairman)
W.N. TURNER (Chairman Elect)
J.E.W. BUCHHOLZ (Secretary)
C.D. BANKS (Publications)
J.P. BATYCKY (Editorial Board)

TECHNICAL COMMITTEES

CAPC Committee
M. KRETZSCHMANN (Chairman)
M.J. SMITH (Vice-Chairman)
B.M. DAS (Secretary)
D.N. MADGE (Publications)

Mineral Economics Committee
W.F. ATKINS (Chairman)
R. KEYES (Vice-Chairman)
G. DANIELS (Secretary)
P.W. ANDREWS (Publications)

Rock Mechanics Committee
J.C. WILSON (Chairman)
D.R. PITEAU (Vice-Chairman)
D.G.F. HEDLEY (Secretary)

CIM

TECHNICAL PAPERS

VOLUME 75, NUMBER 842 MAY 1982

Coal Mining

65 Experience in the Parkgate Seam; *T.E. Wheatley*, Thoresby Colliery, North Nottinghamshire, U.K.

Coal Structure

71 Internal structure of coal seams and mechanical stabilitiy; *M.L. Jeremic*, Laurentian University, Sudbury, Ontario

76 The effect of shearing on the quality of some coals in the southeastern Canadian Cordillera; *R.M. Bustin*, University of British Columbia, Vancouver, B.C.

Geology of Ore Deposits

84 The Fond-du-Lac uranium deposit; *L.A. Homeniuk, R.J. McH. Clark* and *R. Bonnar*, Eldorado Nuclear Limited, Ottawa, Ontario

Mine Geology

90 Meter-wide veins and a kilometer-wide anomaly: wall-rock alteration at the Campbell Red Lake and Dickenson gold mines, Red Lake District, Ontario; *P.J. MacGeehan* (now with Western Mining Corporation Limited, Kalgoorlie, Australia), *T. Sanders* and *C. Jay Hodgson* (now with MERI, McGill University, Montreal, Quebec), Queen's University, Kingston, Ontario

Structural Geology (synopsis)

103 A solution to the mechanics of horizontal offset; *S.V. Burr*, Consulting Geologist-Geophysicist, Toronto, Ontario

Mechanical-Electrical

105 Hydrostatic shoe bearing eliminates problems for large mills; *Bo Trygg*, SKF Sweden, and *Brian McIntyre*, SKF Canada Limited

Iron and Steel

116 A metallurgical evaluation of Grade 483 line pipe; *D.R. Bell, R.B. Casault* (now retired) and *J.D. Boyd*, Energy, Mines and Resources Canada, Ottawa

Hydrometallurgy

127 Comparison of oxidants for the leaching of uranium ores in sulphuric acid; *K.E. Haque* and *G.M. Ritcey*, Energy, Mines and Resources Canada, Ottawa

Non-Ferrous Metallurgy

134 Techno-economic optimization of the treatment of tin ores; *Jorge Lema Patino*, Embassy of Bolivia, Washington, D.C.

Exhibit 1009
FLS v. Metso

MECHANICAL-ELECTRICAL

Hydrostatic shoe bearing eliminates problems for large mills

BO TRYGG
Product Manager, Hydrostatic Bearings
SKF - Sweden
BRIAN McINTYRE
Segment Manager - Heavy Industry
SKF Canada Limited

ABSTRACT

The need for grinding mills of ever increasing capacity and greater feed openings has tended toward mill trunnion diameters being beyond the size limits for roller bearings.

Hydrodynamic plain bearings need to be wide enough to achieve the necessary bearing pressure in order to obtain an oil film with sufficient carrying capacity at low rotational speeds. This greater width increases edge loading resulting from the deflection of the mill under load.

Because of the high surface pressure involved, the life of support rollers and girth rings is often inadequate—fatigue leads to flaking on the contact surfaces. Heat treatment of the girth rings also has its problems.

The hydrostatic shoe bearing permits unlimited trunnion diameter and a high carrying capacity. The self-aligning shoes compensate automatically for radial deviations and large deformations can be tolerated at the girth ring.

The sliding surfaces are completely separated by oil under pressure, enabling negligible starting torque and good damping capacity to be achieved together with low rotational speeds.

Introduction

Hydrostatic bearings have been known within machine technology since 1865, when the Frenchman Girard received a patent for such a bearing. During the following 75 years, these types of bearings were used sporadically for thrust bearings, primarily in water turbines. The first usable radial bearing was not designed until 1938. Since the 1950s, when hydrostatic bearings started to come into use within the field of machine tools, extensive research and development work has been carried out at various institutions and research centres throughout the world.

Many support problems are now solved by means of hydrostatic plain bearings and the primary factor in deciding to use them is their unique characteristics:

- ability to carry high loadings
- no starting torque
- large damping capacity
- no wear
- large running accuracy

The hydrostatic shoe bearing has been developed specially for use in the heavy machine industry, with the requirements for high loadings and large support diameters which this market demands.

Function

Irrespective of the area of machine construction within which the hydrostatic shoe bearing is to operate, the same basic principles still apply to its function; i.e. the sliding surfaces are completely separated by means of oil under pressure. In order to give a total description of the functioning of the shoe bearing system, we have chosen to describe below the function of what we will call a complete system, where both master shoes as well as slave shoes are used.

As mentioned above, the same principles apply to all areas of construction, but with those simplifications and adaptions which the relevant machine construction allows or requires. We wish to stress that the description of function

Bo Trygg

Bo Trygg, born in Sweden, joined SKF Göteborg as a mechanical engineer in the Heavy Machinery Application Department in 1969. In 1973, he was appointed project manager for the development of a new design of a vibrating screen bearing. Mr. Trygg was appointed as engineering manager of the Mineral Processing Equipment Department in 1976 and then as product manager of the Hydrostatic Bearing Department in 1979.

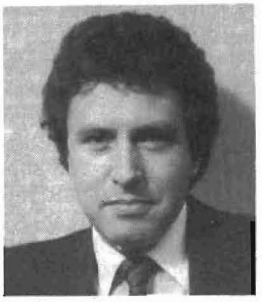

Brian McIntyre

Brian McIntyre received his engineering training in England with Clarke Chapman & Co. Ltd., commencing in 1963. He served an engineering apprenticeship and moved to the Mechanical Handling division as a designer specializing in hoisting and conveyor equipment. In 1970, he joined the British Gas Corporation Research Station as a designer of testing apparatus for gas pipelines. During this period, he completed his Higher National Certificate (HNC) in mechanical engineering.

In 1977, he joined SKF Canada Limited, and he was appointed as segment, manager heavy industry, in January of this year.

Keywords: Bearings, Hydrostatic bearings, Shoe bearings, Mills, Trunnions, Grinding mills, Girth rings, Lubrication, Safety devices.

Page 5 of 9
Exhibit 1009
FLSV. Metso

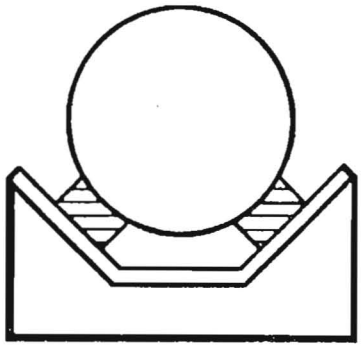

FIGURE 1. Radial position of girth ring.

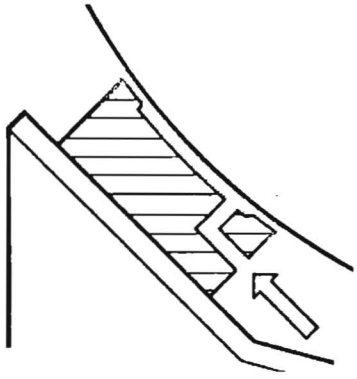

FIGURE 2. Separation of surfaces by oil film.

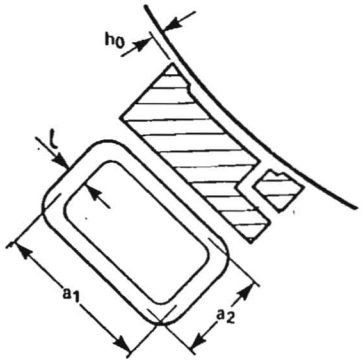

FIGURE 3. Oil film thickness at laminar flow.

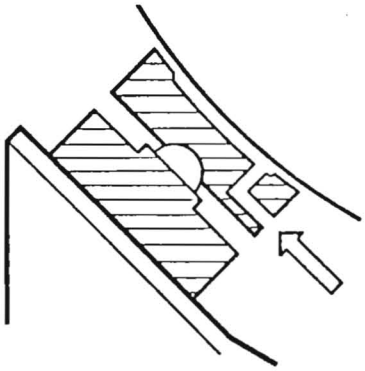

FIGURE 4. Articulated shoes.

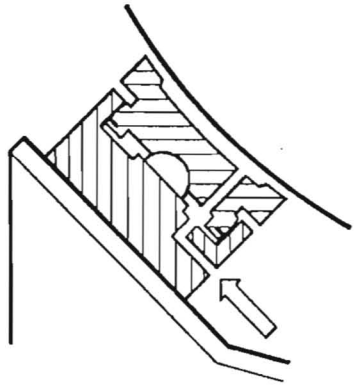

FIGURE 5. Articulated shoes with pressure-relieved joint.

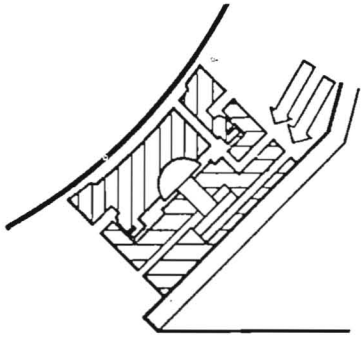

FIGURE 6. Slave shoe regulated by fluctuating pressure in the piston chamber.

given discusses the principles of the shoe bearing system, and that the figures of both shoes and the oil supply systems are stylized ones.

Description of Function

The radial position of a girth ring can be determined by means of two fixed angled supports (Fig. 1).

If the surface of the supports is designed with the same radius of curvature as the girth ring and the support surface is provided with a recess and a sufficient amount of oil under the requisite pressure is supplied, then it is possible to separate the mating surfaces by means of an oil film. This applies irrespective of whether the girth ring is stationary or rotating. The thickness of this oil film is not affected by the speed of rotation. The oil pressure is affected by two factors only—the magnitude of the loading and the area of the supporting surface (Fig. 2).

According to Hagen-Poiseuille, the oil film thickness at laminar flow is determined by the equation (Fig. 3):

$$h_o = \sqrt[3]{12 \frac{q\,n\,l}{b\,\Delta p}}$$

where h_o = oil film thickness, gap
q = flow through the gap
n = dynamic viscosity of the oil
l = length of gap
b = width of gap + $2a_1 + 2a_2$
Δp = drop in pressure over the gap

Sliding Shoes

If the supports—to be called from now on 'sliding shoes'—are allowed to rest on a semisphere, they will be able to tilt and turn in all directions. In this way, errors in form and angular misalignments in the girth ring can be compensated for. However, the joint will have to take up the full load and a relatively large friction torque will make movement difficult (Fig. 4).

The joint can be relieved by designing the lower part of the sliding shoe as a piston and allowing a duct to connect the oil recess in the sliding shoe with the cavity under the sliding shoe. The oil pressure will then be the same on both sides of the sliding shoe (Fig. 5).

The oil pressure is a function of the magnitude of the load and the size of the support area. At increased load and constant support area, the thickness of the oil film decreases at the same time as the oil pressure increases. For practical reasons, it is necessary to limit both the pressure and the size of the supports. For this reason, the number of supports must be increased for large loadings. The sliding shoes in the two original supports, "*master shoes*", are, as has been previously mentioned, fixed radially and therefore determine the centre of rotation of the girth ring. In order to be able to compensate for errors of form and misalignment of the girth ring, the sliding shoes must, by the additional shoes—"slave shoes",—be able to move in a radial direction.

If one allows the joint to be affected from below by a piston via a piston rod, the radial position of the sliding shoe can be regulated by means of increasing or decreasing the oil pressure in the lower piston housing, i.e. the requirements for a function of the "slave shoe" have been fulfilled (Fig. 6).

Let us see how a combination of one master shoe and one slave shoe functions.

If the supporting surfaces in the two shoes are made equally large and supplied with equal amounts of oil, and if it is assumed that the oil film thickness is the same on both shoes, then according to Hagen-Poiseuille's law, the pressure must also be equal, i.e. $p_1 = p_2$.

It then follows that the loads on the two shoes must also be equal. By providing a connection between the piston housing of the master shoe and the lower piston housing of the slave shoe, it is possible to get the shoes to work

Page 6 of 9
Exhibit 1009
FLS v. Metso

together. The same load-dependent pressure will thus prevail in the lower piston housing of the slave shoe as in the piston housing of the master shoe (Fig. 7).

The equilibrium equation for the slave shoe is then:

$$A_1 p_2 = A_2 p_2 + A_4 p_1$$
$$p_1 = p_2 2$$
$$A_1 = A_2 + A_4$$

This relationship between the areas is a prerequisite for achieving equality of oil film thickness in the two shoes.

Errors for Form

Let us now examine the case of an error of shape in the grith ring, for example a depression in the surface.

When the depression passes the slave shoe, the gap increases and the oil flows more easily, thus decreasing the pressure p_2. The shoe carries less load. The master shoe, which has not yet been affected by the depression, receives a corresponding increase in load with the resultant increase in the pressure p_1. An increase in the pressure p_1 causes the lower piston in the slave shoe to be raised sufficiently so as to achieve a new equilibrium, i.e. the pressures p_1 and p_2 are again equal. In the case of a bulge in the surface, this procedure will be the reverse. In this way, the radial load on the two shoes is automatically the same (Fig. 8).

Hydrostatic shoe bearings can be used to advantage to take axial loads as well. If axial location in both directions is required, it is possible to choose between the two methods, as shown in Figure 9.

The left-hand illustration shows a thrust bearing which consists of vertical sliding shoes mounted directly on the radial shoe. The sliding shoes are located at each side of the girth ring. Alternatively, the sliding shoes can be located against a special guide flange.

Oil Supply System

The system comprises primarily the oil tank, pump equipment, filters and requisite safety equipment.

As previously mentioned, all shoes are fed with equally large flows. This is achieved by means of a flow divider which divides the constant primary flow into a requisite number of equal subflows. The flow-divider is comprised, in principle, of a number of gear pumps, one for each shoe, mounted on a common shaft and driven by the oil flow. They work alternately as pumps or motors depending on the pressure in the shoes. The pressure does not affect the flow, which remains equal and constant to all the shoes under all circumstances.

If the bearing arrangement also includes shoes for axial location, then units for these shoes are also incorporated in the flow divider.

The return oil is collected in the sump beneath the shoes and then passes back to the oil tank (Fig. 10).

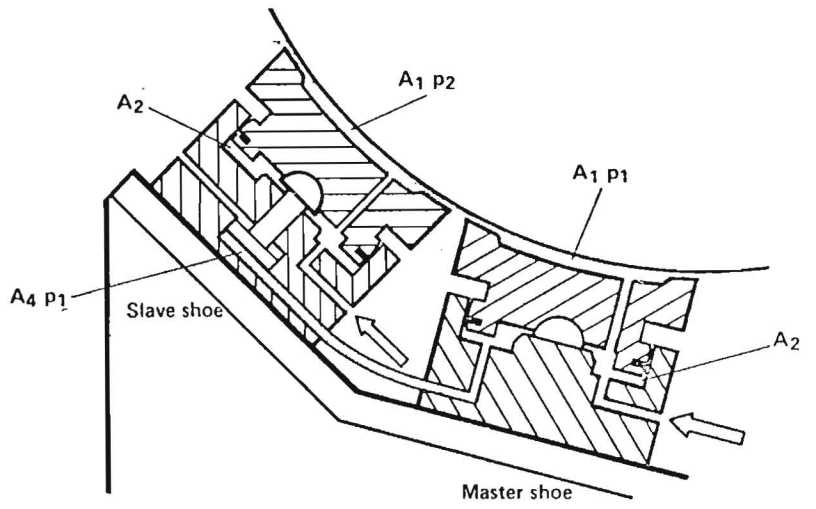

FIGURE 7. Slave shoe - master shoe combination.

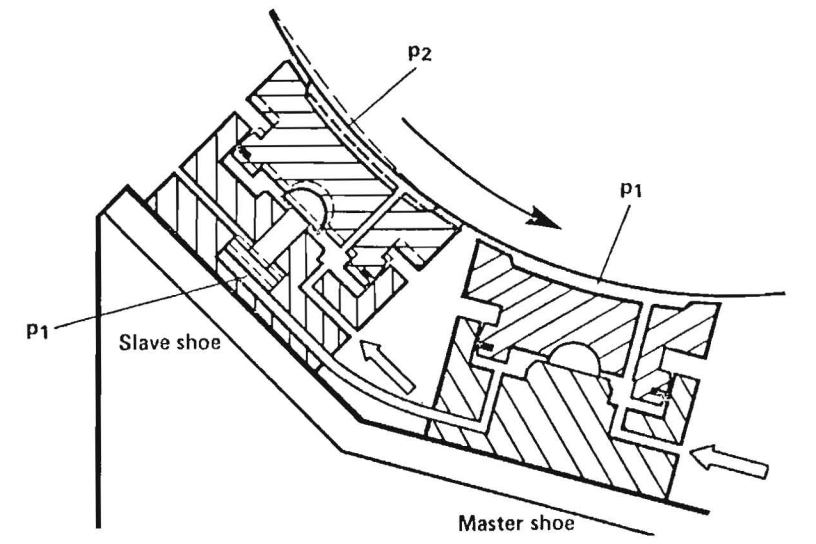

FIGURE 8. Depression effect on shoes.

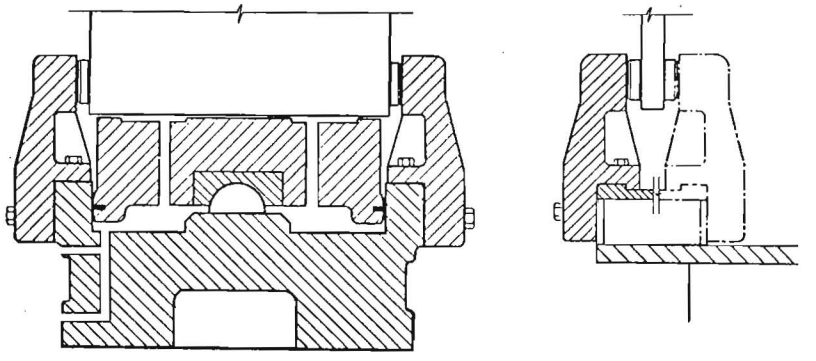

FIGURE 9. Hydrostatic thrust bearing arrangements.

Safety Devices

It is of the utmost importance to ensure that metal-to-metal contact between the sliding shoes and the girth ring does not occur during rotation. In order to avoid this, the oil supply system is equipped with a number of safety devices. If the pump should fail or stop for any reason

Exhibit 1009
FLS v. Metso

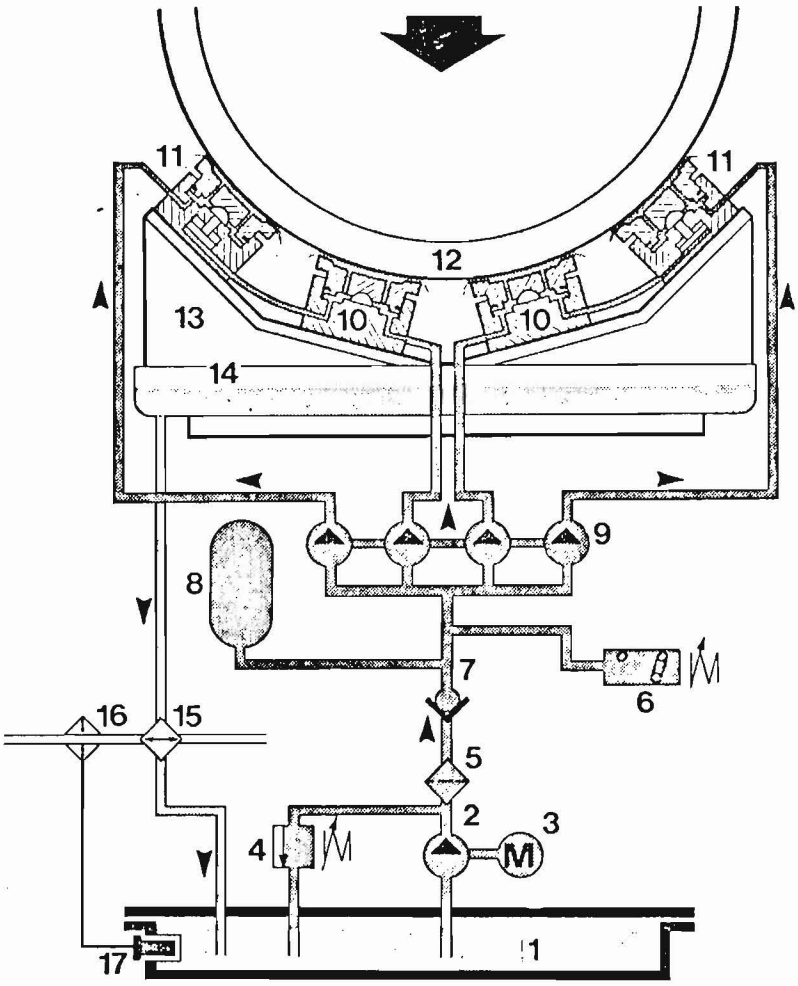

1. Oil tank
2. Pump
3. Electric motor
4. Relief valve
5. Oil filter
6. Pressure switch monitoring the pump motor
7. Check valve
8. Accumulator
9. Flow divider
10. Master shoe
11. Slave shoe
12. Girth ring
13. Pedestal for the shoes
14. Oil sump
15. Oil cooler
16. Valve for cooling water
17. Thermostat

FIGURE 10. Oil supply system.

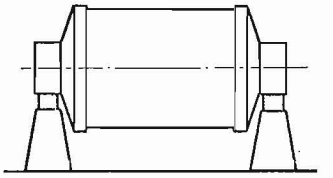

FIGURE 11.

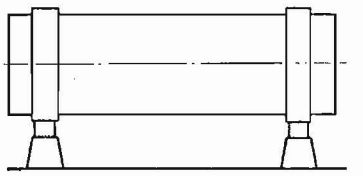

FIGURE 12.

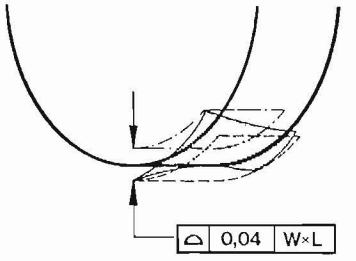

FIGURE 13. Accuracy of shape for girth ring.

whatsoever, then the pressure switch activates an alarm which immediately stops the mill. In such an event, or when there is a complete power cut with both oil pump and plant stopped, the bearing arrangement is supplied with oil during run-down time from a hydraulic accumulator. Other pressure switches can be connected in such a manner that the mill cannot be started up again until the requisite oil pressure has been obtained.

Oil filters with blockage warning systems are also incorporated in the pump circuit as well as heating and cooling equipment for the oil.

Trunnion and Girth Ring

Trunnion bearing arrangements in Figure 11 relate to so-called trunnion bearings, i.e., drums having carrying heads.

Girth ring bearing arrangements in Figure 12 relate to so-called runner bearings, i.e. the bearings act against a girth ring, applied directly on the circumference of the mill or along its extension.

The following remarks will primarily discuss requirements for, and design of, girth rings, but the specifications indicated will also apply to trunnions in the case of trunnion bearing arrangements, wherever this is applicable.

The girth rings can be manufactured of a low-carbon-content weldable steel with a hardness of 100-150 HB; for example, SIS 1312 (0.12% C, 0.20% Si, 0.5% Mn). The rings are roller-bent in the normal manner and the joint welded prior to machining.

The following manufacturing tolerances should apply:

Exterior fineness, Ra 3.2 (equivalent to fine turning).

Exterior shape tolerance. The degree of shape accuracy should lie within 0.04 mm and be related to the surface of the individual shoe, i.e. the width (W) and length (L) which the shoe occupies (Fig. 13). The diameter tolerances are shown in Figure 14.

The width of the girth ring (b), and the requirements for same, depend on where the hydrostatic axial location will be used and, in such case, in which manner this is to be arranged.

No Axial Location

If the bearing arrangement is not to be combined with any axial location, the girth ring shall have such a width that it always covers at least the entire surface of the sliding shoe. The following factors are decisive in determining the width:

- how accurately the radial shoes can be adjusted axially in relationship to the centre of the girth ring;
- how large the axial movement will be during operation, dependent on longitudinal extension, axial location, etc.

As a guide value, it is recommended that the width (b) of the girth ring for an axially non-located bearing arrangement shall be selected as being at least the width (W) of the sliding shoe plus 10 mm.

Page 8 of 9
Exhibit 1009
FLS v. Metso

Areas of Application

The unique design and function of the hydrostatic shoe bearing solves support problems within a wide area. Most often it is the support system's ability to carry high loadings in combination with great support diameters which has a decisive influence on the choice as to the principle of support. However, such factors as great damping capacity, negligible starting torque, great running accuracy and infinitesimal wear are also arguments which weigh heavily in favour of choosing the hydrostatic shoe bearing system.

All this has contributed to the hydrostatic shoe bearing system opening the way for new solutions within machine technology.

With regard to the function of the bearing, there are no limitations as to the size of the support diameter, which is why the bearings can operate directly against a girth ring placed on the circumstance so that the expensive supporting heads are eliminated. This also contributes to reducing the over-all length of the mill, which has a direct effect on the cost of the actual construction. The girth ring can also be placed on those points on the circumference which are most favourable with regard to the tension, with resulting savings of material.

The negligible starting torque contributes to the loading on the gearboxes being greatly reduced during start-up and during slow rotation, which in the majority of cases allows the gearbox to be manufactured in a smaller size. The hydrostatic shoe bearing system is constructed of a number of complete self-aligning shoes which compensate automatically for both angular errors as well as radial deviations of the girth ring. The result is that edge loadings in the bearings are avoided and that the support becomes insensitive to alignment faults or settling of the pedestal. The radial self-aligning capacity enables large deformations to be tolerated at the girth ring and, despite this, gives an even distribution of loading between the shoes.

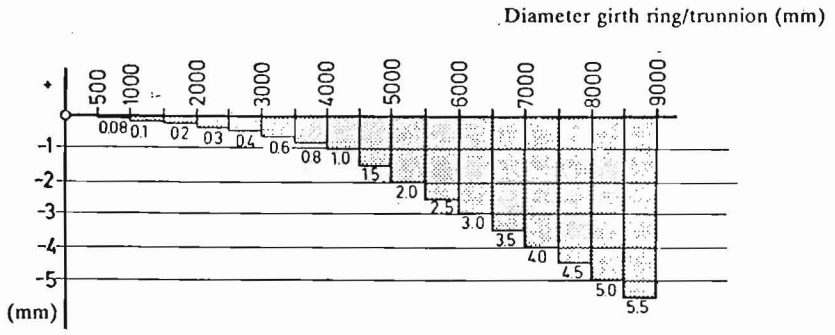

FIGURE 14. Dimensional tolerance for girth ring.

For supporting large axles for different types of machining, for example grinding, turning, etc., many of the advantages of the hydrostatic shoe bearings can be utilized, primarily their running accuracy, damping capacity and negligible starting torque. An argument which weighs heavily in their favour is also the fact that the shoe bearing design makes it possible to achieve fine adjustment of the central axis of the work piece after pressurizing.

In supporting vertical rotating discs, for example containers for horizontal mills, the shoe bearings have the unsurpassed ability to achieve an evenly distributed loading between the shoes as well as the support being insensitive to shock loadings, and it is these factors which are made use of. Here too the choice of bearings is of course affected positively by the fact that the starting torque is negligible. For this type of construction, we recommend that the disc is laid up on three master shoes with fixed height dimensions and plane running areas; i.e., the shoes should be of the model without the so-called lower piston. Taking into account the size of the load, it will then be possible, if the need should arise, to have any number of slave shoes of the standard design connected to the master shoes.

APEO names new slate of officers

Dr. Philip A. Lapp, P. Eng., president of the consulting firm of Philip A. Lapp Ltd., Toronto, has been elected president of the 47,000-member Association of Professional Engineers of Ontario (APEO). Dr. Lapp succeeds Alex Kobelak, P. Eng.

Among engineers joining the new council is **Claudette MacKay-Lassonde**, P.Eng., of Mississauga, the first woman to be an APEO councillor. Ms. MacKay-Lassonde is a nuclear safety analyst with Ontario Hydro.

Other new council posts filled by acclamation are: **C.J. Moull**, P.Eng., Toronto, manager of procurement, Ontario Hydro, first vice-president; **W.H. Kerr**, P.Eng., Ottawa, vice-president, Oliver, Mangione, McCalla and Associates Limited, eastern region councillor; **D.J. Thwaites**, P.Eng., Brampton, engineering manager, Litton Systems Canada Limited, west-central region councillor; **[illegible]**, P.Eng., St. Catharines, director of engineering, Regional Municipality of Niagara, western region councillor; **P.L. Cook**, P.Eng., Porcupine, manager and partner, Fodor Engineering Limited, Timmins, northern region councillor.

Elected second vice-president was **C. Bruce Ross**, P. Eng., Toronto, executive vice-president of Hollinger Argus Limited.

Bernard C. Pattinson, P.Eng., Thornhill, was elected councillor for the east-central region. Mr. Pattinson is a design engineer with Ontario Hydro.

Remaining on Council to serve the last year of their two-year term of office are: east-central region councillor, **L.F. Pitura**, P.Eng., Thornhill, assistant deputy minister, community development, Ministry of Municipal Affairs and Housing; western region councillor, **F.E. Burke**, P.Eng., Waterloo, professor, management sciences, faculty of engineering, University of Waterloo; eastern region councillor, **E.R. Corneil**, P.Eng., Kingston, professor, department of mechanical engineering, Queen's University; northern region councillor, **G.A. Cuthbertson**, P.Eng., Thunder Bay, project manager, Proctor and Redfern Limited; councillor-at-large, **N. Monsour**, P. Eng., Sarnia, manager, inspection department, Polysar Limited.

Appointed councillors, representing various fields of engineering, are: **D.J. Clough**, P.Eng., Baden, professor of engineering, University of Waterloo (civil); **B.A. Young**, P.Eng., Mississauga, vice-president, Great Lakes Electrical Limited, Toronto (electrical); **R.T. Tamblyn**, P.Eng., Gormley, president, Interface Ltd., Toronto (mechanical, aeronautical and industrial); **J.F. McOuat**, P.Eng., Toronto, president, Watts, Griffis and McOuat Limited (mining and geology).

Exhibit 1009
FLS v. Metso