CERTIFICATE OF TRANSLATION ACCURACY

I am a professional translator, reviewer, and coordinator specializing in translating Korean, Japanese and Chinese to English and vice versa.

I served as Chief Examiner of the certified court interpreter test for the State of California and as a contract translator and interpreter for various federal agencies through the U.S. Department of State for more than a decade. I served as an instructor at the University of California at Berkeley and the Middlebury Institute of International Studies at Monterey (MIIS) Graduate Program in Translation.

I have more than 30 years of experience translating thousands of technical, legal, and business documents from Korean to English submitted to, among others, Korean judicial authorities, U.S. federal courts, the U.S. International Trade Commission (ITC), and the USPTO Patent Trial and Appeal Board (PTAB).

I certify that I translated the following document from Korean into the English language. I also certify that this is a true, correct, and complete translation of the corresponding source text to the best of my knowledge and ability.

I certify under penalty of perjury that the foregoing is true and correct.

Executed this 29th day of April 2025 in Contra Costa County of the State of California.

By: _____

Alex N. Jo
Member, ATA

SAMSUNG 1008

Korean Intellectual Property Office

KOREAN INTELLECTUAL PROPERTY OFFICE

This is to certify that the following application annexed hereto is a true and correct copy as filed with the Korean Intellectual Property Office (KIPO). [*Korean*]

This is to certify that the following application annexed hereto is a true copy from the records of the Korean Intellectual Property Office. [*English*]

Application Number Application Number	:	10-2016-0005835
Filed Filing Date	:	Jan. 18, 2016 [*Korean*] Jan. 18, 2016 [*English*]
Applicant (s) Applicant (s)	:	WILUS Institute of Standards and Technology Inc. [*Korean*] WILUS Institute of Standards and Technology Inc. [*English*]

Aug. 1, 2018

Commissioner of the Korean Intellectual Property Office
COMMISSIONER

[*seal affixed*: Commissioner of the Korean Intellectual Property Office
This seal is for patent filing purposes]

[Bibliography]

[Name of Document]	Patent Application
[Reference Number]	160003HEW
[Application Category]	Patent applications
[Applicant]	
[Name]	WILUS Institute of Standards and Technology Inc.
[Patent Client Number]	1-2013-022334-3
[*Attorney, Agent, or Firm*]	
[Name]	Kook Il Lim
[Agent Number]	9-2014-00874-4
[General Power of Attorney Registration Number]	2014-036557-3
[Title of the Invention in Korean]	METHOD, APPARATUS, AND SYSTEM OF EFFICIENT WIDE BANDWIDTH PPDU TRANSMISSIONS IN WIRELESS LANS
[Title of the Invention in English]	METHOD, APPARATUS, AND SYSTEM OF EFFICIENT WIDE BANDWIDTH PPDU TRANSMISSIONS IN WIRELESS LANS

[Inventor]

[Name]	Juhyung SON
[Name Indicated in English]	Juhyung SON
[Resident Registration Number]	770724-1XXXXXX
[Zip Code]	16021
[Address]	(Euiwangnaeson e-pyeonhansesang apartment #1114-302) 11, Naesonjungang-ro, Euiwang-si, Gyeonggi-do, [Korea]
[Nationality]	KR

[Inventor]

[Name]	Jinsam KWAK
[Name Indicated in English]	Jinsam KWAK
[Resident Registration Number]	740908-1XXXXXX

[Zip Code]	16021
[Address]	(Euiwangnaeson e-pyeonhansesang apartment #1113-1704) 11, Naesonjungang-ro, Euiwang-si, Gyeonggi-do, [Korea]
[Nationality]	KR

[Inventor]

[Name]	Geonjung Ko
[Name Indicated in English]	Geonjung Ko
[Resident Registration No.]	860909-1XXXXXX
[Zip Code]	16547
[Address]	(Jugong Green Ville 3rd Complex apartment #301-606) 36, Dongtanwoncheon-ro 915beon-gil, Yeongtong-gu, Suwon-si, Gyeonggi-do, [Korea]
[Nationality]	KR

[Application Language]	Korean

[National R&D Project That Supported This Invention]

[Project Number]	RO166-16-1030
[Ministry Name]	Ministry of Science, ICT and Future Planning
[Name of the Project Manager]	National IT Industry Promotion Agency
[Project Name]	Information and Broadcasting Standards Development Support
[R&D Name]	IEEE802.11 High Efficiency WLAN (HEW) Standard Development
[Contribution Rate]	1/1
[R&D Conducted by]	WILUS Institute of Standards and Technology Inc.
[R&D Period]	Apr. 1, 2014 to Feb. 28, 2017

[Purport]	It is hereby submitted to the Commissioner of the Korean Intellectual Property Office (KIPO) as above.
Agent or Attorney	Kook Il Lim (signature or seal)

[Fees]

[Application Filing Fee]	0 page (s)	46,000 KRW
[Additional Appl. Filing Fee]	67 page (s)	0
[Priority Claim Fee]	0 case (s)	0
[Fee for Examination Request]	0 claim (s)	0
[Total]	46,000 KRW	
[Reason for Fee Reduction]	Small Business (70% reduction) [1]	
[Fee after Reduction]	13,800 KRW	

[Description of the Invention]

[Title of the Invention]

METHOD, APPARATUS, AND SYSTEM OF EFFICIENT WIDE BANDWIDTH PPDU TRANSMISSIONS IN WIRELESS LANS [*in Korean*] {METHOD, APPARATUS, AND SYSTEM OF EFFICIENT WIDE BANDWIDTH PPDU TRANSMISSIONS IN WIRELESS LANS} [*in English*]

[Technical Field]

<1> The present invention relates to a wireless communication method, and more particularly, to a method for efficient wideband PPDU transmission.

[Background Technology of the Invention]

<2> In recent years, as mobile devices have become increasingly popular, wireless LAN technologies that can provide fast wireless Internet services to these devices have received a great deal of attention. Wireless LAN technology is a technology that enables mobile devices such as smartphones, smart pads, laptop computers, portable multimedia players, embedded devices, etc., to wirelessly access the Internet in a home or business or in a specific service area based on wireless communication technology at a short distance.

<3> Since the Institute of Electrical and Electronics Engineers (IEEE) 802.11 supported early wireless LAN technologies using the 2.4 GHz frequency, standards for a variety of technologies have been put to practical use or under development. First, IEEE 802.11b supports communication speeds of up to 11 Mbps while using frequencies in the 2.4 GHz band.

IEEE 802.11a, which was commercialized after IEEE 802.11b, uses frequencies in the 5 GHz band rather than the 2.4 GHz band, which reduces the impact of interference compared to frequencies in the 2.4 GHz band, which is significantly more congested, and uses OFDM technology to increase communication speeds up to 54 Mbps. However, IEEE 802.11a has the disadvantage of shorter communication distances compared to IEEE 802.11b. And IEEE 802.11g, like IEEE 802.11b, uses frequencies in the 2.4 GHz band to realize communication speeds of up to 54 Mbps/day and satisfies backward compatibility, so it has received considerable attention, and it has an advantage over IEEE 802.11a in terms of communication distance as well.

<4> IEEE 802.11n is a technical specification designed to overcome the limitations on communication speed that have been noted as a weakness in wireless LANs. IEEE 802.11n aims to increase the speed and reliability of networks and extend the operating distance of wireless networks. More specifically, IEEE 802.11n supports High Throughput (HT) with data rates of up to 540 Mbps or more, and is based on Multiple Inputs and Multiple Outputs (MIM0) technology, which uses multiple antennas at both the transmitter and receiver ends to minimize transmission errors and optimize data rates. The standard can also use a coding scheme that transmits multiple redundant copies of the data to increase data reliability.

<5> As wireless LANs have become more widespread and the applications utilizing them have diversified, a need has arisen for new wireless LAN systems to support higher throughput called VHT (Very High Throughput) than the data rates supported by IEEE 802.11n.

Of these, IEEE 802.11ac supports a wide bandwidth (80 MHz to 160 MHz) in the 5 GHz frequency. Although the IEEE 802.11ac standard is only defined in the 5 GHz band, early 11ac chipsets will also support operation in the 2.4 GHz band for backward compatibility with existing 2.4 GHz band products. In theory, the standard will allow multi-station wireless LAN speeds of at least 1 Gbps and maximum single link speeds of at least 500 Mbps. This is achieved by expanding the wireless interface concept adopted by 802.11n, including wider radio frequency bandwidth (up to 160 MHz), more MIMO spatial streams (up to 8), multi-user MIMO, and higher-density modulation (up to 256 QAM). There is also IEEE 802.11ad, which uses the 60 GHz band to transmit data instead of the existing 2.4 GHz/5GIIz band. IEEE 802.11ad is a transmission standard that provides speeds of up to 7 Gbps using beamforming technology, making it suitable for streaming high-bitrate videos, such as large-capacity data or uncompressed HD video, etc.

<6> More recently, as a next-generation wireless LAN standard after 802.11ac and 802.11ad, discussions continue to be held to provide high-efficiency and high-performance wireless LAN communication technology in high-density environments. In other words, in the next-generation wireless LAN environment, high-frequency efficient communication must be provided indoors and outdoors in the presence of high-density stations and access points (APs), and various technologies are required to realize this.

[Specifics of the Invention]

[Problem to Be Solved by the Invention]

<7> It is an object of the present invention to provide high-efficiency/high-performance wireless LAN communications in high-density environments as described above.

[Means to Solve the Problem]

<8> According to an embodiment of the present invention, an apparatus, system, and method of wireless LAN communication for a wireless LAN can be provided.

[Effect of the Invention]

<9> The present invention relates to a wireless communication method, and more particularly, to a method for configuring wireless LAN physical layer header fields that support simultaneous multi-user transmission in indoor and outdoor environments.

[Brief Description of the Drawings]

<10> FIG. 1 is a drawing illustrating a wireless LAN system according to one embodiment of the present invention.

FIG. 2 illustrates an independent BSS, which is a wireless LAN system according to another embodiment of the present invention.

FIG. 3 is a block diagram illustrating the configuration of a station 100 according to one embodiment of the present invention.

FIG. 4 is a block diagram illustrating the configuration of an AP 200 according to one embodiment of the present invention.

FIG. 5 illustrates the configuration of L-SIG and RL-SIG and the utilization of the L_LENGTH field according to an embodiment of the present invention.

FIG. 6 illustrates a method for indicating a WLAN PPDU format by utilizing the L_LENGTH field of the L-SIG and RL-SIG parts along with the HE-SIG-A part, according to an

embodiment of the present invention.

FIG. 7 illustrates the configuration of the HE-SIG-A field, which changes according to the PPDU format, in accordance with an embodiment of the present invention.

FIG. 8 illustrates the configuration of HE-SIG-B according to an embodiment of the present invention.

FIG. 9 illustrates the configuration of HE-SIG-B in an HE MU PPDU transmitted over 80 MHz, according to an embodiment of the present invention.

FIG. 10 illustrates conventional methods for transmitting wideband PPDUs in relation to an embodiment of the present invention.

FIG. 11 illustrates efficient wideband PPDU transmission methods according to an embodiment of the present invention.

FIG. 12 illustrates methods for transmitting a PPDU using one or two RF modules, taking as an example the non-contiguous, fixed expansion-based wideband PPDU configuration method of FIG. 11(c), according to an embodiment of the present invention.

FIG. 13 provides a detailed illustration of the frequency filtering process for the wideband PPDU transmission method of FIG. 12(a), according to an embodiment of the present invention.

FIG. 14 provides a detailed illustration of the frequency filtering process for the wideband PPDU transmission method of FIG. 12(b).

FIG. 15 provides a detailed illustration of the frequency filtering process for the wideband PPDU transmission method of FIG. 12(c).

FIG. 16 illustrates various sequences in which non-contiguous PPDU transmission is applied, according to another embodiment of the present invention.

FIG. 17 illustrates methods for configuring HE-SIG-B when transmitting an HE PPDU using a Non-Contiguous, Fixed Extension scheme, according to an embodiment of the present invention.

FIG. 18 illustrates the configuration of HE-SIG-B when applying a filtering technique that additionally filters adjacent RUs when data is not transmitted on a specific channel, according to an embodiment of the present invention.

FIG. 19 illustrates a method for configuring HE-SIG-B when transmitting an HE PPDU using Non-Contiguous OFDMA between a single AP and a single STA, according to an embodiment of the present invention.

FIG. 20 illustrates methods for configuring HE-SIG-B when transmitting an HE PPDU using a Contiguous, Flexible Extension scheme, according to an embodiment of the present invention.

FIG. 21 illustrates methods for configuring HE-SIG-B when transmitting an HE PPDU using a Non-Contiguous, Flexible Extension scheme, according to an embodiment of the present invention.

FIG. 22 illustrates methods for configuring various HE PPDU bandwidths when transmitting an HE PPDU using both a Non-Contiguous, Fixed Extension scheme and a Contiguous, Flexible Extension scheme, according to an embodiment of the present invention.

FIG. 23 illustrates methods for configuring various HE PPDU bandwidths by combining multiple configurations generated based on HE PPDU bandwidth composition principles, according to an embodiment of the present invention.

[Detailed Specifics for Practicing the Invention]

<11> The terms used in this specification have been chosen to be as generic as possible in current common usage, taking into account their function in the invention, but they may vary according to the intent of a person having ordinary skill in the art of this technical field, custom, or emergence of new technologies, etc. In addition, in certain cases, terms have been chosen at will by the applicant, in which case their meaning will be given in the description of the invention to which they relate. It is therefore intended that the terms used in this specification should be construed based on the actual meaning of the term and the context of the specification as a whole, and not merely as a designation of a term.

<12> Throughout the specification, when a configuration is the to be "connected" to another configuration, this includes not only being "directly connected" but also being "electrically connected" with another constituent element in between. Also, when a configuration is the to "include" a particular constituent element, it is meant to be capable of including additional constituent elements, not to the exclusion of other constituent elements, unless specifically to the contrary. In addition, the limitation of "same or more" or "same or less" with respect to a particular threshold may be appropriately substituted with "more than" or "less than", respectively, depending on the embodiment.

<13> FIG. 1 illustrates a wireless LAN system according to one embodiment of the present

invention. A wireless LAN system includes one or more Basic Service Sets (BSS), which represent a set of devices that can communicate with each other by successfully synchronizing. Generally, BSS can be divided into infrastructure BSS (BSS) and independent BSS (IBSS), and FIG. 1 shows infrastructure BSS.

<14> As illustrated in FIG. 1, infrastructure BSS (BSS1, BSS2) includes or more stations (STA-1, STA-2, STA-3, STA-4, STA-5), access point (PCP/AP-1, PCP/AP- 2) that is a station that provides a distribution service (DS), and a distribution system (DS) that connects multiple access points (PCP/AP-1, PCP/AP- 2).

<15> A station (station, STA) is any device that includes a medium access control (MAC) and a physical layer interface to a wireless medium as defined by the IEEE 802.11 standard, and broadly includes both non-access point (Non-AP) stations as well as access points (APs). Also, the term "terminal" may be used in this specification as a concept that includes both stations and wireless LAN communication devices such as APs. A station for wireless communication includes a processor and a transceiver, and may further include a user interface portion, a display unit, and the like, depending on the embodiment. The processor may generate frames to be transmitted over the wireless network, process frames received over the wireless network, and perform various other processing to control the station. The transceiver is functionally connected to the processor and transmits and receives frames over the wireless network for the station.

<16> An access point (AP) is a discrete entity that provides access to a distribution system (DS) via a wireless medium for stations associated with it. In principle, communication between non-AP stations in an infrastructure is carried out, in principle, via an AP, but direct communication between non-AP stations is also possible if a link is established. In this invention, AP is used as a concept that includes PCP (Personal BSS Coordination Point), and broadly speaking, it can include all concepts of centralized controller, base station (BS), node-B, base transceiver system (BTS), and/or site controller, etc.

<17> A plurality of infrastructure BSSs may be connected via a distribution system (DS). The plurality of BSSs connected via the distribution system may be referred to as an Extended Service Set (ESS).

<18> FIG. 2 illustrates an independent BSS, which is a wireless LAN system according to another embodiment of the present disclosure. In the embodiment of FIG. 2, portions that are identical or corresponding to the embodiment of FIG. 1 are intended to omit redundant description.

<19> BSS-3 shown in FIG. 2 is an independent BSS and does not include an AP, so none of the stations (STA-6, STA-7) are in the state of being connected to an AP. An independent BSS is not allowed to connect to the distribution system and forms a self-contained network. In an independent BSS, each station (STA-6, STA-7) can be directly connected to each other.

<20> FIG. 3 is a block diagram illustrating the configuration of a station 100 according to one embodiment of the present invention.

<21> As shown, a station 100 according to an embodiment of the present invention may comprise a processor 110, a network interface card (NIC) 120, a user interface portion 140, a display unit 150, and a memory 160.

<22> First, the network interface card 120 is a module for performing wireless LAN connectivity, and performs packet transmission and reception for the station 100. The network interface card 120 may be built into or external to the station 100, and may include at least one network interface card module utilizing different frequency bands, depending on the embodiment. For example, the network interface card may include network interface card modules of different frequency bands, such as 2.4 GHz, 5 GHz, and 60 GHz. According to one embodiment, the station 100 may comprise a network interface card module utilizing a frequency band above 6 GHz and a network interface card module utilizing a frequency band below 6 GHz. Each network interface card module can perform wireless communication with an AP or an external station in accordance with the wireless LAN specifications for the frequency band supported by that network interface card module. The network interface card 120 may operate only one network interface card module at a time or may operate multiple network interface card modules together simultaneously, depending on the performance and requirements of the station 100. When the station 100 includes a plurality of

network interface card modules, each of the network interface card modules may be provided in a standalone form or may be integrated into a single chip.

<23> Next, the user interface portion 140 includes various forms of input/output means provided in the station 100. That is, the user interface portion 140 can receive user input using various input means, and the processor 110 can control the station 100 based on the received user input. Further, the user interface portion 140 may utilize various output means to perform outputs based on instructions from the processor 110.

<24> Next, the display unit 150 outputs an image on a display screen. The display unit 150 may output various display objects, such as content executed by the processor 110 or a user interface based on control instructions of the processor 110. In addition, the memory 160 stores control programs used in the station 100 and various data accordingly. Such control programs may include connection programs required for the station 100 to perform connections with APs or external stations.

<25> The processor 110 of the present invention may execute various instructions or programs, and process data within the station 100. The processor 110 may also control each of the units of the station 100 described above, and may control data transmission and reception between the units. According to an embodiment of the present invention, the processor 110 may execute a program for establishing a connection with an AP stored in the memory 160 and receive a communication setup message transmitted by the AP. Further, the processor 110 may read information about a

priority condition of the station 100 included in the communication setup message, and may request access to the AP based on the information about the priority condition of the station 100. Specific embodiments of this will be described later.

<26> The station 100 illustrated in FIG. 3 is a block diagram according to one embodiment of the present invention, wherein the separated blocks represent logically distinct elements of the device. Accordingly, the elements of the device described above may be mounted on a single chip or a plurality of chips, depending on the design of the device. Furthermore, in an embodiment of the present invention, some components of the station 100, such as the user interface portion 140 and the display unit 150, may be optionally equipped in the station 100.

<27> FIG. 4 is a block diagram illustrating the configuration of an AP 200 according to one embodiment of the present disclosure.

<28> As shown, an AP 200 according to an embodiment of the present invention may comprise a processor 210, a network interface card 220, and a memory 260. With respect to FIG. 4, portions of the configuration of the AP 200 that are identical or equivalent to the configuration of the station 100 of FIG. 3 will be omitted to avoid redundant description.

<29> Referring now to FIG. 4, an AP 200 according to the present disclosure comprises a network interface card 220 for operating a BSS in at least one frequency band. As described above in the embodiment of FIG. 3, the network interface card of the AP 200 may also a plurality of network interface modules utilizing different frequency bands from each other. In other words, the AP 200

according to an embodiment of the present invention may comprise two or more network interface card modules in different frequency bands, such as 2.4 GHz, 5 GHz, and 60 GHz. Preferably, the AP 200 may comprise a network interface card module utilizing a frequency band above 6 GHz and a network interface card module utilizing a frequency band below 6 GHz. Each network interface card module can perform wireless communication with stations in accordance with the wireless LAN specifications for the frequency band supported by that network interface card module. The network interface card 220 may operate only one network interface card module at a time or may operate multiple network interface card modules together simultaneously, depending on the performance and requirements of the AP 200.

<30> Next, the memory 260 stores control programs used by the AP 200 and various data associated therewith. These control programs may include an access program that manages access to the station. Further, the processor 210 controls each unit of the AP 200 and may control data transmission and reception between the units. According to an embodiment of the present invention, the processor 210 may execute a program for connecting with a station stored in the memory 260 and transmit a communication setting message for one or more stations. The communication setup message may include information about the access priority conditions of each station. Further, the processor 210 performs the connection setting according to the connection request of the station. A specific embodiment of this will be described later.

<32> FIG. 5 illustrates the configuration of L-SIG and RL-SIG and the utilization of the L_LENGTH field, according to an embodiment of the present invention.

<33> FIGS. 5(a)/(b) illustrate the frame formats of 11a/g and 11ax PPDU, respectively, according to an embodiment of the present invention. FIG. 5(c) presents the detailed field structure of L-SIG and RL-SIG, which are commonly used across the aforementioned PPDU formats.

<34> The L-SIG utilizes 64 FFT OFDM (-32 to 0 to 31, a total of 64 subcarriers). In this configuration, the leftmost 6 subcarriers (-32 to -27) and the rightmost 5 subcarriers (27 to 31) are used as guard carriers, while the central subcarrier (0) is used as a DC carrier. Excluding these 6 + 5 + 1 = 12 subcarriers, there remain 52 subcarriers, of which 4 subcarriers (-21, -7, 7, 21) are allocated as pilot subcarriers, while the remaining 48 subcarriers are used for data transmission. When employing BPSK modulation with a coding rate of 1/2 (MCS = BPSK, Rate = 1/2), a total of 24 bits of information can be transmitted. The configuration of these 24-bit information fields is shown in FIG. 5(c).

<35> L_RATE (4 bits) indicates the MCS (Modulation and Coding Scheme) used for data transmission, representing one of the transmission rates (6/9/12/18/24/36/48/54 Mbps) derived from a combination of modulation schemes (BPSK, QPSK, 16-QAM, 64-QAM) and coding rates (1/2, 2/3, 3/4). By referring to the L_RATE and L_LENGTH fields, the total length of the PPDU can be determined. An 11ax STA always sets the L_RATE field to the minimum transmission rate of 6 Mbps.

<36> L_LENGTH (12 bits), when combined with the L_RATE field, indicates the length of the PPDU. The interpretation method of this field differs between legacy nodes and 11ax nodes.

<37> When a legacy STA receives the PPDU, the L_RATE field set to 6 Mbps indicates that 3 bytes (24 bits) can be transmitted within one 64-FFT OFDM symbol duration of 4us. Approximating SVC (16 bits) and Tail (6 bits) as one symbol (24 bits), the PPDU length (PPDU_LENGTH) can be calculated as PPDU_LENGTH=RXTIME=TXTI= (1+[L_LENGTH/3])

×4+20 (Refer to FIG. 5(d)). In the equation above, the additional 20us accounts for the transmission time of L-STF, L-LTF, and L-SIG. The ceil [x] operation represents the smallest integer greater than or equal to x. The maximum value of L_LENGTH (12 bits) is 4095, which results in a maximum PPDU_LENGTH of 5.484 ms. However, legacy devices based on the 11a/g standard may consider an L_LENGTH field greater than 2340 bytes as invalid, since such values were not permitted under earlier standards. Considering this limitation, the maximum PPDU_LENGTH is effectively reduced to 3.144 ms.

<39> When an 11ax STA receives the PPDU, the symbol count based on 64-FFT can be obtained by adding 3 bytes (corresponding to SVC/TAIL) to the L_LENGTH field and then dividing by the symbol transmission capacity of 3 bytes per symbol. Multiplying the number of symbols by 4 μs (time per symbol) and adding 20 μs (corresponding to L-STF, L-LTF, and L-SIG transmission) results in the PPDU_LENGTH or RXTIME. RXTIME (us)=[(L_LENGTH+3) /3]×4+20. Conversely, an 11ax STA transmitting the PPDU must set as L_LENGTH=[(TXTIME−20)/4])×3−3, where TXTIME represents the total transmission time of the 11ax PPDU (refer to FIG. 5(d)).

<41> In the equations above, for an 11ax STA, the L_LENGTH value is always computed as floor (L_LENGTH/3) after reception, meaning that three different L_LENGTH values map to the same PPDU_LENGTH. For example, the three values L_LENGTH = {3k+1, 3k+2, 3 (k+1)} all yield the same result (k+1) when applying floor (L_LENGTH/3).

<42> In an embodiment of the present invention, the three L_LENGTH values are used to indicate

PPDU_LENGTH while performing additional signaling. Specifically, L_LENGTH values {3k+1, 3k+2, 3 (k+1)} may be used to represent different PPDU Types applied to the 11ax PPDU.

<44> FIG. 6 illustrates a method for indicating a WLAN PPDU format using the L_LENGTH field in the L-SIG and RL-SIG parts, along with the HE-SIG-A part, according to an embodiment of the present invention.

<45> As mentioned in FIG. 5, three different L_LENGTH values can be used not only to indicate PPDU_LENGTH but also to perform additional signaling.

<46> First, when L_LENGTH is expressed in the form of 3k+1, the 11ax PPDU can indicate an HE SU PPDU, an HE Trigger-based PPDU, or an Extension PPDU, which are exchanged between an AP and a single STA. For this purpose, additional signaling is performed using the modulation of two symbols in the HE-SIG-A part. If the PPDU is an HE SU PPDU or an HE Trigger-based PPDU, both symbols of HE-SIG-A are modulated using BPSK. If the PPDU is an Extension PPDU, the two symbols of HE-SIG-A are modulated using BPSK and QBPSK, respectively. The Extension PPDU may be used to indicate PPDU formats supported by future standards beyond 11ax or to define additional PPDU formats within 11ax.

<47> Second, when L_LENGTH is expressed in the form of 3k+2, the 11ax PPDU can indicate an HE MU PPDU exchanged between an AP and multiple STAs, or an HE Extended Range (ER) SU PPDU or HE ER Trigger-based PPDU exchanged between an AP and an outdoor STA. For this

purpose, additional signaling is performed using the modulation of two symbols in the HE-SIG-A part. If the PPDU is an HE MU PPDU, both symbols of HE-SIG-A are modulated using BPSK. If the PPDU is an HE ER SU PPDU or an HE ER Trigger-based UL PPDU, the two symbols of HE-SIG-A are modulated using BPSK and QBPSK, respectively.

<48> The mapping between L_LENGTH field values and PPDU types, as mentioned above, can be modified in order while maintaining the same conceptual meaning.

<50> FIG. 7 illustrates the configuration of the HE-SIG-A field, which varies depending on the PPDU format, according to an embodiment of the present invention.

<51> The HE-SIG-A field provides PPDU common information necessary for receiving 11ax PPDUs and can be modulated using BPSK (R=1/2) over 64FFT with two symbols. The PPDU common information includes parameters such as PPDU Bandwidth, BSS Color, Number_of_HE-LTF, and SIG-B MCS.

<52> For an outdoor STA, the two symbols of HE-SIG-A can be repeated for transmission, and this repeated structure is referred to as RHE-SIG-A. The presence or absence of RHE-SIG-A can be signaled as described in FIG. 5.

<53> Additionally, the HE-SIG-A field has different bit field structures depending on whether the PPDU format is HE SU PPDU, HE MU PPDU, or HE Trigger-based PPDU.

<55> As shown in FIG. 7(a), when the PPDU format is HE SU PPDU, the HE-SIG-A field includes the following bit fields:

<56> DL/UL indicates the transmission direction of the SU PPDU.

<57> Format distinguishes whether the PPDU is an HE SU PPDU or an HE Trigger-based PPDU.

<58> BSS Color indicates the identifier of the BSS where the PPDU is exchanged.

<59> Spatial Reuse conveys SINR Margin, TX Power, and other relevant information that can be referenced by STAs intending to perform Spatial Reuse transmission during the transmission of the corresponding PPDU.

<60> TXOP Duration indicates the TXOP interval that continues after the transmission of the PPDU, allowing surrounding STAs to set NAV (Network Allocation Vector) to defer their transmissions during that period.

<61> Bandwidth specifies the total bandwidth over which the PPDU is transmitted. This value can indicate one of 20MHz, 40MHz, 80MHz, or 160MHz (including 80+80MHz).

<62> MCS indicates the MCS value applied to the MPDU in the corresponding PPDU.

<63> CP+LTF Size represents the combination of the LTF type (1x, 2x, or 4x LTF) used and the Cyclic Prefix (CP) values applied to the subsequent A-MPDU transmission.

<64> Coding indicates whether BCC or LDPC coding is used and, in the case of LDPC, whether an Extra Symbol was transmitted.

<65> NSTS indicates the Number of Spatial Time Streams (NSTS) transmitted when the PPDU is transmitted using SU-MIMO.

<66> STBC specifies whether Space Time Block Coding (STBC) was applied.

<67> TxBF indicates whether Transmit Beamforming was used.

<68> DCM specifies whether Dual Carrier Modulation (DCM) was applied, which transmits the same information on two subcarriers to mitigate narrowband interference.

<69> Packet Extension indicates the level of Packet Extension applied to the corresponding PPDU.

<70> Beam Change specifies whether Beam Change was applied after L-LTF and before HE-LTF in the PPDU.

<71> CRC/Tail is used to verify the integrity of the information contained in HE-SIG-A and initialize the BCC decoder.

<73> As shown in FIG. 7(b), in the case of the HE MU PPDU format, HE-SIG-A includes the following bit fields. Portions that overlap with the description in FIG. 7(a) may not be separately explained.

<74> DL/UL indicates the transmission direction of the MU PPDU. While it is currently evident that MU PPDU is always set to DL MU and transmitted only in the downlink, exceptions can be considered through the following embodiments:

<75> First, even in the case of PPDU exchanges between a single AP and STA, HE MU PPDU may be selected if the transmission of the HE-SIG-B field is required, allowing the transmission

direction of the PPDU to be specified accordingly.

<76> This is because, even in the case of PPDU exchanges between a single AP and STA, data can be selectively transmitted over specific bands using either Contiguous OFDMA or Non-contiguous OFDMA.

<77> For example, if STA1 performs CCA (Clear Channel Assessment) before transmitting an 80MHz PPDU to the AP and determines that only the Secondary 20MHz channel is busy, the conventional method would require transmission only over the Primary 20MHz.

<78> However, with the proposed method, PPDU transmission can be performed over the Primary 20MHz and Secondary 40MHz, excluding only the Secondary 20MHz. In this case, Resource Allocation Signaling for the corresponding PPDU necessarily requires the HE-SIG-B field.

<79> In this case, even though STA1 is transmitting a PPDU as a single STA, it can use the HE MU PPDU format for transmission and set the DL/UL bit field to UL before transmitting.

<80> Further details regarding Non-Contiguous OFDMA will be explained in other figures.

<81> In HE MU PPDU, the Bandwidth field can indicate a wider variety of bandwidth options compared to the Bandwidth field in HE SU PPDU.

<82> This is because, in addition to the conventional 20/40/80/160MHz Contiguous bandwidths, additional signaling bits may be required to represent the Non-Contiguous bandwidths as described above.

<83> The SIG-B MCS field indicates the MCS used in HE-SIG-B, and SIG-B can employ a

variable MCS (0 to 5) depending on the amount of information that needs to be signaled.

<84> In HE MU PPDU, the CP+LTF Size field signals only the values used in HE SU PPDU, excluding the combination of 1x_LTF + 0.8us_CP.

<85> The SIG-B Compression field indicates that a compression mode has been applied to reduce the amount of information when signaling SIG-B. Specifically, when an HE MU PPDU is transmitted as a Full-BW MU-MIMO, frequency-specific resource allocation for each 20MHz sub-channel becomes unnecessary, thereby allowing SIG-B compression.

<86> The details regarding SIG-B Compression are further explained in other figures.

<87> The SIG-B Dual MCS field is used when transmitting PPDU of 40MHz or higher, where HE-SIG-B may transmit different information in each Primary 20MHz and Secondary 20MHz sub-channel. In this case, different MCS levels can be applied to each Primary/Secondary 20MHz in order to maintain a similar number of HE-SIG-B symbols. The SIG-B Dual MCS field signals the MCS levels applied to SIG-B for each 20MHz sub-channel.

<88> The SIG-B DCM field indicates whether DCM (Dual Carrier Modulation) has been applied to SIG-B to ensure stable transmission of the SIG-B portion.

<89> The Num of SIG-B Sym field indicates the number of symbols used for transmitting SIG-B.

<91> As illustrated in FIG. 7(c), when the HE Trigger-based PPDU is used, the HE-SIG-A includes the following bit fields. The explanations overlapping with FIGS. 7(a) and 7(b) may not be redundantly described.

<92> The Format field is used to distinguish whether the PPDU is an HE SU PPDU or an HE Trigger-based PPDU.

<93> Subsequently, BSS Color, Spatial Reuse, TXOP Duration, and Bandwidth bit fields are transmitted. Since the HE Trigger-based PPDU is a UL PPDU that one or more STAs transmit simultaneously, the SIG-A field is commonly included in all UL PPDUs, making it difficult to include individual STA-specific information. Therefore, only the common information of the PPDU can be contained. However, this results in an issue where out of the 52 available bits in the SIG-A portion, approximately 20 bits remain unused. Details on how to compensate for this issue are further explained in other figures.

<95> FIG. 8 illustrates the configuration of HE-SIG-B according to an embodiment of the present invention.

<96> The HE-SIG-B may be present in an HE MU PPDU and contains information necessary for receiving a Multi-User PPDU. This information is classified into Common Info and User-Specific Info. The detailed configuration of HE-SIG-B is illustrated in FIG. 8(a). The RA (Resource Allocation) information, which contains the OFDMA frequency division allocation information for the corresponding bandwidth, is included, along with a CRC/Tail field to ensure integrity. The RA field is 8 bits in length and is structured as shown in FIG. 8(b). By analyzing the RA information, it is possible to determine how many STA-specific information elements are included. The STA-specific information is transmitted in pairs along with the CRC/Tail field. If three STA-specific information elements are transmitted, the CRC/Tail field is separately appended to the first two STA information elements, while the third STA information element has its own CRC/Tail field.

The STA-specific information is transmitted as a 21-bit field when the STA is an OFDMA STA, as illustrated in FIG. 8(c)-1, and when the STA is an MU-MIMO STA, the STA-specific information is also conveyed as a 21-bit field, as shown in FIG. 8(c)-2.

<98> FIG. 9 illustrates conventional methods for transmitting a wideband PPDU, in relation to an embodiment of the present invention.

<99> As shown in FIG. 9(a), when an 80MHz PPDU is transmitted, the L-STF, L-LTF, L-SIG, RL-SIG, and HE-SIG-A fields contain the same information, which is transmitted in the first 20MHz (‘A’ band) and identically repeated across the second (‘B’ band), third (‘C’ band), and fourth (‘D’ band) 20MHz bands. In contrast, for HE-SIG-B, the information transmitted in the first 20MHz and the second 20MHz may differ, whereas the information transmitted in the first 20MHz and third 20MHz, as well as in the second 20MHz and fourth 20MHz, remains identical. In this case, the HE-SIG-B information transmitted in each 20MHz band must contain the information necessary for the STAs receiving the MPDUs in that respective 20MHz band.

<100> Consequently, a receiving STA must simultaneously decode the HE-SIG-B transmitted over at least the first 20MHz and the second 20MHz bands to quickly determine whether its STA-specific information is included.

<102> FIG. 9(b) illustrates the detailed configuration of HE-SIG-B (A, C) transmitted in the 1st 20MHz(a) and 3rd 20MHz(c) bands.

The RA_A || RA_C information, which contains OFDMA frequency division allocation details for each A and C 20MHz band, is transmitted along with an additional CRC/Tail field for integrity verification. Each RA field is composed of 8 bits, structured as shown in FIG. 8(b). By analyzing this RA information, the number of STA-specific information elements included can be determined, and the STA-specific information is grouped in pairs, with each pair appended with a CRC/Tail. FIG. 9(b) depicts a case where an even number of STAs are allocated in both the A and C bands. In this scenario, the STA-specific information allocated to the A band (A1 to An) is grouped into pairs, each pair being appended with a CRC/Tail, and similarly, the STA-specific information allocated to the C band (C1 to Cn) is grouped into pairs, each pair appended with a CRC/Tail.

<103> Additionally, FIG. 9(b) also illustrates the detailed configuration of HE-SIG-B (B, D) transmitted in the 2nd 20MHz(b) and 4th 20MHz(e) bands. The detailed structure follows the same principles as HE-SIG-B (A, C).

<105> When transmitting an 80MHz OFDMA PPDU, as shown in FIG. 9(a), a 26RB (Resource Block) consisting of 26 subcarriers is positioned in the center frequency region. Since this 26RB resource cannot be clearly assigned to either the A, C bands or the B, D bands, it can be signaled in at least one or both of HE-SIG-B (A, C) and HE-SIG-B (B, D), as shown in FIG. 9(b).

<107> FIG. 10 illustrates efficient wideband PPDU transmission methods according to an

embodiment of the present invention.

<108> FIG. 10(a) illustrates a method of transmitting a Physical Layer Convergence Protocol (PLCP) Protocol Data Unit (PPDU) using an 80MHz bandwidth. Initially, after the previous PPDU transmission on the channel is completed, a STA with data to transmit checks whether the primary channel is idle during the Arbitrary Inter-Frame Spacing (AIFS) period. If the primary channel remains idle during CCA (Clear Channel Assessment), the STA decreases the Backoff Window (BW) value by 1 at each idle slot. If the channel becomes busy at any CCA slot, the STA stops the CCA process and resumes CCA once the channel becomes idle again, starting from the previously paused BW value after AIFS. Once the BW value reaches zero, the STA prepares for transmission. Prior to transmission, the STA performs CCA on the intended subchannels for a duration equal to the PIFS (Point Coordination Function Inter-Frame Space) to determine their availability. FIG. 9(a) illustrates a scenario where CCA detects an ongoing transmission on a secondary 20MHz channel, causing the STA to use only the primary 20MHz channel for data transmission. In this case, the STA must be capable of Dynamic Bandwidth Operation, allowing it to quickly reconfigure the PPDU based on the available channel bandwidth.

<109> FIG. 10(d) illustrates a scenario in which, during CCA (Clear Channel Assessment), an ongoing transmission is detected on a secondary 20MHz channel, leading the STA to halt its transmission attempt. Instead of transmitting on the available primary 20MHz channel, the STA continues CCA until the entire 80MHz channel becomes idle. Only then does the STA proceed with transmitting an 80MHz PPDU. In this case, the STA is limited to Static Bandwidth Operation, meaning it lacks the capability to dynamically reconfigure the PPDU according to the available channel bandwidth.

<110> As described above, in the existing wideband PPDU transmission methods, when

communication is actively occurring in the subchannels within an OBSS (Overlapping Basic Service Set) environment, issues arise where the transmission PPDU bandwidth is reduced (as shown in FIG. 10(a)) or the PPDU transmission is continuously delayed (as shown in FIG. 10(b)).

<112> FIG. 11 illustrates efficient wideband PPDU transmission methods according to an embodiment of the present invention.

<113> FIG. 11(a) depicts a Contiguous, Fixed Extension-based wideband PPDU transmission method, in which the PPDU always occupies contiguous frequency bands. The bandwidth extension follows a fixed expansion sequence, such as 20→40→80→160, restricting flexibility in dynamically adapting bandwidth.

<114> This method is identical to the conventional approach described in FIG. 10 and has the drawback of low spectrum utilization efficiency. The CCA (Clear Channel Assessment) process only reports the first detected busy channel among the primary 20MHz, secondary 20MHz, secondary 40MHz, and secondary 80MHz channels. Since contiguous bandwidth occupation is enforced, the bandwidth cannot be extended beyond the first busy channel, making CCA results for subsequent channels unnecessary.

<116> FIG. 11(b) illustrates a Contiguous, Flexible Extension-based wideband PPDU transmission method, where the PPDU always occupies contiguous frequency bands but allows flexible bandwidth expansion in 20MHz increments, such as 20→40→60→80→100→120→140→160.

<117> In this method, CCA (Clear Channel Assessment) only reports the first detected busy 20MHz channel. Since contiguous bandwidth occupation is enforced, bandwidth expansion beyond the first busy channel is restricted, making CCA results for subsequent channels unnecessary.

<119> FIG. 11(c) illustrates a Non-Contiguous, Fixed Extension-based wideband PPDU transmission method, where the PPDU can occupy non-contiguous frequency bands, but bandwidth expansion follows a fixed sequence, such as 20→40→80→160.

<120> In this method, CCA must report all detected busy channels among the primary 20MHz, secondary 20MHz, secondary 40MHz, and secondary 80MHz channels. Since non-contiguous bandwidth occupation is allowed, CCA results for all sub-channels are required.

<122> FIG. 11(d) illustrates a Non-Contiguous, Flexible Extension-based wideband PPDU transmission method, where the PPDU can occupy non-contiguous frequency bands and allows flexible bandwidth expansion in 20MHz increments.

<123> In this method, CCA (Clear Channel Assessment) must report all detected busy channels in 20MHz increments. Since non-contiguous bandwidth occupation is allowed, CCA results for all secondary 20MHz channels are required.

<125> Comparing the four methods above,

<126> The methods shown in FIGS. 11(b) and 11(c) have a moderate multi-channel utilization but offer the advantage of not imposing a high burden on CCA. Additionally, they have the advantage of a relatively simpler PPDU configuration compared to FIG. 11(d).

<127> the method in FIG. 11(b) allows contiguous wideband PPDU transmission; however, it has the drawback that if OBSS activity exists in any secondary 20MHz channel, wideband PPDU transmission is significantly restricted.

<128> The method in FIG. 11(c) results in non-contiguous PPDU formation but has the advantage that even with OBSS activity in secondary 20MHz and 40MHz channels, wideband PPDU transmission up to 160MHz is still possible. However, this method only allows one instance of non-contiguous frequency allocation within the 160MHz bandwidth.

<129> The method in FIG. 11(d) offers the highest multi-channel utilization, but it comes with a high CCA burden, and in some cases, wideband PPDU transmission may extend across multiple non-contiguous frequency bands, which can be a disadvantage.

<131> FIG. 12 illustrates methods for transmitting a PPDU using one or two RF modules based on the non-contiguous, fixed extension-based wideband PPDU configuration method exemplified in FIG. 11(c), according to an embodiment of the present invention.

<132> FIG. 12(a) illustrates a method in which a transmitter equipped with a single RF module supporting up to 160MHz transmits a 160MHz PPDU. If, based on the CCA result, the secondary 40MHz channel is determined to be busy, the wideband PPDU is transmitted using only one RF module over the idle primary 40MHz (a combination of primary 20MHz and secondary 20MHz) and the secondary 80MHz. In this case, the PPDU is an HE MU PPDU, in which data intended for multiple receiving STAs is configured using OFDMA. If the CCA result indicates that the secondary 40MHz channel is busy, the data allocated to STAs assigned to that channel is immediately deferred, and the corresponding channel becomes a filtered channel where no data is transmitted.

<133> This method is much easier to implement than the Dynamic PPDU reconstruction method described in FIG. 10(a). In FIG. 10(a), Dynamic PPDU reconstruction requires modifying the wideband PPDU into a narrowband PPDU immediately before transmission based on CCA results. Since the PPDU must be dynamically reconstructed, the PPDU length must also be adjusted to fit the allocated TXOP duration, making implementation highly complex.

<134> However, the Dynamic PPDU reconstruction method in FIG. 12(a) is relatively simpler to implement because the OFDMA-based PPDU is preconfigured, and only the RUs allocated to busy channels are filtered out, while the remaining RUs are transmitted.

<135> In this case, the overall PPDU configuration follows the spectral mask of a 160MHz channel, and no data is transmitted in channels determined to be busy via filtering. However, signals transmitted in the primary 40MHz channel do not adhere to the 40MHz spectral mask, meaning that RUs transmitted in sections adjacent to the filtered secondary 40MHz channel could potentially

interfere with OBSS signals present in the secondary 40MHz channel. To minimize this interference, adjacent RUs may be additionally filtered before transmission.

<137> FIG. 12(b) illustrates a method in which a transmitter equipped with a single RF module supporting up to 160MHz transmits a 160MHz PPDU, wherein, if the CCA result indicates that the secondary 40MHz channel is busy, the wideband PPDU is transmitted using only one RF module over the idle primary 40MHz (a combination of primary 20MHz and secondary 20MHz) and secondary 80MHz. In this case, the PPDU is an HE MU PPDU, in which data intended for multiple receiving STAs is configured using OFDMA. If the CCA result shows that the secondary 40MHz channel is busy, the data allocated to the STAs assigned to that channel is immediately deferred, and the corresponding channel is designated as a filtered channel, where no data transmission occurs.

<138> Here, the overall PPDU configuration follows the spectral mask of an 80MHz channel, and no data is transmitted in channels determined to be busy via filtering. However, signals transmitted in the primary 20MHz channel do not adhere to the 20MHz spectral mask, meaning that RUs transmitted in sections adjacent to the filtered secondary 20MHz channel may interfere with OBSS signals present in the secondary 20MHz channel. To minimize this interference, the adjacent RUs may be additionally filtered before transmission.

<140> FIG. 12(c) illustrates a method for transmitting a wideband PPDU when the transmitter is equipped with two RF modules, supports up to 80+80MHz, and intends to transmit an 80+80MHz PPDU, wherein, if the CCA result indicates that the secondary 40MHz channel is busy, the

wideband PPDU is transmitted using both RF modules over the idle primary 40MHz (combination of primary 20MHz + secondary 20MHz) and secondary 80MHz. In this case, the PPDU is an HE MU PPDU, constructed using OFDMA, targeting multiple receiving STAs. Based on the CCA result for the secondary 40MHz channel, data allocated to the corresponding receiving STAs is deferred. The first RF module transmits a PPDU over the primary 40MHz channel, which adheres to the 40MHz spectral mask. Simultaneously, the second RF module transmits a PPDU over the secondary 80MHz channel, which adheres to the 80MHz spectral mask. Since this configuration ensures that no interference is introduced into the secondary 40MHz channel, there is no need to filter the transmission of adjacent RUs.

<142> FIG. 12(d) illustrates a method for transmitting a wideband PPDU when the transmitter is equipped with two RF modules, supports 80+80MHz, and intends to transmit an 80+80MHz PPDU, wherein, if the CCA result indicates that the secondary 20MHz channel and the secondary 80MHz channel are busy, the wideband PPDU is transmitted using only one RF module over the idle primary 20MHz + secondary 40MHz. In this case, the second RF module does not need to be activated, and the operation of the first RF module is the same as described in FIG. 12(b). Additionally, since the original first RF module adheres to the 80MHz spectral mask, the PPDU transmitted by the first RF module also maintains a filtered structure, where the secondary 20MHz channel portion is filtered within the 80MHz spectral mask.

<144> FIG. 13 provides a detailed illustration of the frequency filtering aspects of the wideband PPDU transmission method described in FIG. 12(a) according to an embodiment of the present invention.

<145> FIG. 12(a) illustrates a scenario where a transmitter equipped with a single RF module, capable of supporting 160MHz, detects through CCA that the secondary 40MHz channel is busy and subsequently transmits a wideband PPDU using only one RF module over the idle primary 40MHz (a combination of primary 20MHz and secondary 20MHz) and secondary 80MHz. As described in FIG. 12(a), while filtering the secondary 40MHz channel, it is also possible to apply additional filtering to adjacent resource units (RUs) within the primary 20MHz channel. Initially, the centrally located 26RB within the primary 80MHz band is prioritized for filtering. Furthermore, if the additional adjacent transmission is likely to interfere with the OBSS transmission occurring within the secondary 40MHz, further filtering may be applied. The decision regarding additional RU filtering may be based on various factors, including the transmission power of the transmitting STA, the maximum transmission power allowed for each frequency band, and the received signal strength of the OBSS transmission.

<147> FIG. 14 illustrates in detail the frequency filtering aspect of the method for transmitting a wideband PPDU as described in FIG. 12(b) according to an embodiment of the present invention.

<148> FIG. 12(b) illustrates a case where a transmitter equipped with a single RF module, supporting 160MHz, detects through CCA that the secondary 40MHz channel is busy and transmits a wideband PPDU using only one RF module over the idle primary 40MHz (a combination of primary 20MHz and secondary 20MHz) and secondary 80MHz. In this case, as described in FIG. 12(b), while filtering the secondary 40MHz channel, it is also possible to further filter adjacent resource units (RUs) in the primary 20MHz channel. Thus, in the primary 20MHz channel,

narrowband RUs can be allocated in the adjacent region of the secondary 20MHz channel to minimize resource wastage.

<150> FIG. 15 illustrates the frequency filtering process in the transmission of a wideband PPDU according to the method depicted in FIG. 12(c).

<151> FIG. 12(c) illustrates a scenario where a transmitter equipped with two RF modules supports 80+80MHz transmission, wherein, if the CCA result indicates that the secondary 40MHz channel is busy, the wideband PPDU is transmitted using two RF modules over the idle primary 40MHz (a combination of primary 20MHz and secondary 20MHz) and secondary 80MHz.

In this case, as described in FIG. 12(c), the secondary 40MHz channel is filtered out. However, since transmission in the primary 40MHz channel follows the 40MHz spectral mask, additional filtering for adjacent RUs in the primary 40MHz channel is not required. Nevertheless, in this case, half of the centrally allocated 26RB within the primary 80MHz band must also be filtered. The signaling of this 26RB can be delivered through HE-SIG-B, as described in FIG. 9(b). However, as the RU is not used, the signaling information is not transmitted.

<153> FIG. 16 illustrates various sequences in which Non-contiguous PPDU transmission is applied according to an embodiment of the present invention.

<154> FIG. 16(a) depicts a sequence where, prior to DL MU transmission, the AP performs CCA, detects that the secondary 20MHz channel is busy, and then transmits an MU-RTS over the primary

20MHz and secondary 40MHz. Subsequently, the AP receives Simultaneous CTS responses from each STA over the corresponding bands and proceeds with the DL MU PPDU transmission. In this case, the MU-RTS must explicitly specify the bandwidth information, enabling the receiving STAs to transmit CTS responses over the primary 20MHz and secondary 40MHz bands.

<155> FIG. 16(b) illustrates a sequence in which, prior to DL MU transmission, the AP performs CCA and detects that the primary 80MHz channel is idle, thereby transmitting an MU-RTS over the primary 80MHz band. However, upon receiving Simultaneous CTS responses from the STAs, the AP fails to receive a signal from the secondary 20MHz band. As a result, the DL MU PPDU is transmitted over the primary 20MHz and secondary 40MHz bands. In this case, both the MU-RTS and DL MU PPDU must explicitly indicate their respective bandwidths, with the MU-RTS specifying a primary 80MHz bandwidth, while the DL MU PPDU specifies a primary 20MHz and secondary 40MHz bandwidth.

<156> FIG. 16(c) illustrates a sequence in which, for UL MU transmission, the AP performs CCA and detects that the secondary 20MHz channel is busy. Consequently, the AP signals the Trigger frame over the primary 20MHz and secondary 40MHz bands, and subsequently, each STA transmits an UL MU PPDU within these designated bands. In this scenario, the Trigger frame must specify the bandwidth information to ensure that the receiving STAs transmit UL MU PPDUs within the primary 20MHz and secondary 40MHz bands. Furthermore, no transmitting STAs should be allocated within the secondary 20MHz band due to its busy status.

<157> FIG. 16(d) illustrates a sequence in which, for UL MU transmission, the AP performs CCA and detects that the primary 80MHz channel is idle, wherein, the AP transmits a Trigger frame over the primary 80MHz band, and subsequently, each STA transmits an UL MU PPDU within the assigned bands. This illustrates a situation where one or more STAs, having been allocated an UL RU in the secondary 20MHz channel upon receiving the Trigger, do not use the secondary 20MHz channel due to detecting that the channel is busy or because a NAV has been set.

<159> FIG. 17 illustrates methods for configuring HE-SIG-B when transmitting an HE PPDU using a Non-Contiguous, Fixed Extension scheme according to an embodiment of the present invention.

<160> FIG. 17(a) depicts a scenario where an HE MU PPDU is transmitted over the entire 80MHz bandwidth while excluding the Secondary 20MHz band, utilizing only the Primary 20MHz and Secondary 40MHz channels. In this case, the BW bit field in HE-SIG-A signals the bandwidth in the form of P20+S40, and HE-SIG-B, which contains the information for (A, C, D) bands, is repeatedly transmitted over each available 20MHz channel. This approach reallocates the role of HE-SIG-B in the Secondary 20MHz band to the Primary 20MHz channel since the Secondary 20MHz channel is unavailable.

<161> FIG. 17(b) illustrates a scenario where an HE MU PPDU is transmitted over the entire 160MHz bandwidth while excluding the Secondary 20MHz band, utilizing only the Primary 20MHz, Secondary 40MHz, and Secondary 80MHz channels. In this case, the BW bit field in HE-SIG-A signals the bandwidth in the form of P20+S40+S80, and HE-SIG-B (A, C, D, E, F, G, H), containing information for the (A, C, D, E, F, G, H) bands, is repeatedly transmitted over each available 20MHz channel. This approach reallocates the role of HE-SIG-B in the Secondary 20MHz band to the Primary 20MHz channel since the Secondary 20MHz channel is unavailable.

<162> FIG. 17(c) illustrates a scenario where an HE MU PPDU is transmitted over the entire 160MHz bandwidth while excluding both the Secondary 20MHz and Secondary 40MHz bands, utilizing only the Primary 20MHz and Secondary 80MHz channels. In this case, the BW bit field in HE-SIG-A signals the bandwidth in the form of P20+S80, and HE-SIG-B, containing information for the (A, E, F, G, H) bands, is repeatedly transmitted over each available 20MHz channel. This

approach reallocates the role of HE-SIG-B in the Secondary 20MHz band to the Primary 20MHz channel since the Secondary 20MHz channel is unavailable.

<163> FIG. 17(d) illustrates a scenario where an HE MU PPDU is transmitted over the entire 160MHz bandwidth while excluding the Secondary 40MHz band, utilizing only the Primary 40MHz and Secondary 80MHz channels. In this case, the BW bit field in HE-SIG-A signals the bandwidth in the form of P40+S80, and HE-SIG-B contains information for the (A, E, G) bands and the (B, F, H) bands separately. These are transmitted alternately as HE-SIG-B (A, E, G) and HE-SIG-B (B, F, H) over each Primary 20MHz channel, each Secondary 20MHz channel, and every subsequent 20MHz channel in an alternating manner. Unlike FIGS. 17(a),(b), and(c), in this case, the Secondary 20MHz channel is available, so the role of HE-SIG-B is not reallocated to the Primary 20MHz channel.

<164> Such variable configurations of HE-SIG-B can all be recognized through the BW field in HE-SIG-A. In this case, the BW field in HE-SIG-A signals one of the following configurations: P20, P40, P80, P160 (80+80), P20+S40, P20+S40+S80, P20+S80, or P40+S80.

<166> FIG. 18 illustrates the configuration of HE-SIG-B when, according to an embodiment of the present invention, a filtering technique is applied to exclude a specific channel from data transmission while additionally filtering adjacent RUs.

<167> When transmitting an 80MHz PPDU as shown in FIG. 18(a), the configuration of HE-SIG-

B was described in FIG. 9.

<168> In the case of filtering the secondary 20MHz channel and additionally filtering adjacent RUs in the primary 20MHz channel (e.g., RU allocated to STA_An), the configuration of HE-SIG-B was described in FIG. 18(b). The resulting HE-SIG-B configuration in this case is shown in FIG. 18(b).

<169> At this time, the Common Info for the remaining A, C, and D bands is transmitted, followed by the STA information. If An RU is filtered and the corresponding STA information is deleted, it may cause confusion in receiving the subsequent STA information. To address this issue, a Null STA ID is inserted in the STA information field corresponding to RU An to indicate that the respective band has been filtered. The Null STA ID may either specify a particular STA ID or insert an STA ID that has not been assigned to any STA within the given BSS.

<171> FIG. 19 illustrates a method for configuring HE-SIG-B when transmitting an HE PPDU using Non-Contiguous OFDMA between a single AP and a single STA according to an embodiment of the present invention.

<172> FIG. 19(a) shows a scenario where the STA transmits an HE MU PPDU over the entire 80MHz bandwidth while excluding the Secondary 20MHz band, utilizing only the Primary 20MHz and Secondary 40MHz channels. In this case, since the HE-SIG-A field defined for conventional HE SU PPDU transmission is not suitable for signaling Non-Contiguous PPDU transmission, the transmission follows the HE MU PPDU format to include HE-SIG-B. The BW bit field in HE-SIG-A signals the bandwidth in the form of P20+S40, and HE-SIG-B carries HE-SIG-B (SU Info), which

contains the SU Data information for the (A, C, D) bands, repeating this information over each available 20MHz channel.

<173> Since the BW configuration of 20+40 has already been signaled in HE-SIG-A, the Common Info portion of HE-SIG-B is no longer necessary. Additionally, only a single SU Info portion of the STA-specific part of HE-SIG-B is required. Accordingly, HE-SIG-A must indicate that HE-SIG-B is in a Compression mode where Common Info is omitted. Such variable configurations of HE-SIG-B can be recognized through the BW field and the SIG-B Compression field in HE-SIG-A. In this case, the BW field in HE-SIG-A signals one of the following configurations: P20, P40, P80, P160 (80+80), P20+S40, P20+S40+S80, P20+S80, or P40+S80. Meanwhile, the SIG-B Compression field signals the Single STA HE MU transmission.

<175> FIG. 20 illustrates a method for configuring HE-SIG-B when transmitting an HE PPDU using the Contiguous, Flexible Extension approach according to an embodiment of the present invention.

<176> FIG. 20(a) depicts a scenario where an HE MU PPDU is transmitted over the entire 80MHz bandwidth while excluding the Secondary 40A MHz band, utilizing only the Primary 20MHz and Secondary 40B MHz channels. In this case, the BW bit field in HE-SIG-A signals the bandwidth in the form of P60, and HE-SIG-B includes HE-SIG-B(a) carrying information for the(a) band and HE-SIG-B (B, D) carrying information for the (B, D) bands, alternating their transmission across each 20MHz channel.

<177> FIG. 20(b) depicts a scenario where an HE MU PPDU is transmitted over the entire 160MHz bandwidth while utilizing the Primary 80MHz and Secondary 80A MHz channels. In this case, the BW bit field in HE-SIG-A signals the bandwidth in the form of P100, and HE-SIG-B includes HE-SIG-B (A, C, E), which contains information for the (A, C, E) bands, and HE-SIG-B (B, D), which contains information for the (B, D) bands, alternating their transmission across each 20MHz channel.

<178> FIG. 20(c) illustrates a scenario in which an HE MU PPDU is transmitted over the entire 160MHz bandwidth while utilizing the Primary 80MHz, Secondary 80A MHz, and Secondary 80B MHz channels. In this case, the BW bit field in HE-SIG-A signals the bandwidth in the form of P120, and HE-SIG-B includes HE-SIG-B (A, C, E), which contains information for the (A, C, E) bands, and HE-SIG-B (B, D, F), which contains information for the (B, D, F) bands, alternating their transmission across each 20MHz channel.

<179> FIG. 20(d) illustrates a scenario in which an HE MU PPDU is transmitted over the entire 160MHz bandwidth while utilizing the Primary 80MHz, Secondary 80A MHz, Secondary 80B MHz, and Secondary 80C MHz channels. In this case, the BW bit field in HE-SIG-A signals the bandwidth in the form of P140, and HE-SIG-B includes HE-SIG-B (A, C, E, G), which contains information for the (A, C, E, G) bands, and HE-SIG-B (B, D, F), which contains information for the (B, D, F) bands, alternating their transmission across each 20MHz channel.

<180> The variable configurations of HE-SIG-B as described above can all be recognized through the BW field in HE-SIG-A. In this case, the BW field in HE-SIG-A signals one of P20, P40, P80, P160 (80+80), P60, P100, P120, or P140.

<182> FIG. 21 illustrates a method for configuring HE-SIG-B when transmitting an HE PPDU structured using the Non-Contiguous, Flexible Extension approach according to an embodiment of the present invention.

<183> FIG. 21(a) depicts a scenario where an HE MU PPDU is transmitted over the entire 160MHz bandwidth, utilizing only the Primary 20MHz and Secondary 40AMHz channels. In this case, the BW bit field of HE-SIG-A signals all the utilized 20MHz channels in a bitmap format as shown in FIG. 21(e), and HE-SIG-B (A, C), HE-SIG-B containing information for the (A, C) bands, is repeatedly transmitted in an alternating pattern across each 20MHz channel.

<184> FIG. 21(b) illustrates the transmission of an HE MU PPDU over the entire 160MHz bandwidth while using only the Primary 20MHz and Secondary 40BMHz channels. Here, the BW bit field of HE-SIG-A signals all the utilized 20MHz channels in a bitmap format as shown in FIG. 21(e), and HE-SIG-B (A, D), HE-SIG-B containing information for the (A, D) bands, is transmitted in an alternating pattern across each 20MHz channel.

<185> FIG. 21(c) shows an HE MU PPDU transmission over the entire 160MHz bandwidth while utilizing the Primary 20MHz, Secondary 40AMHz, and Secondary 80AMHz channels. In this case, the BW bit field of HE-SIG-A signals all the utilized 20MHz channels in a bitmap format as shown in FIG. 21(e), and HE-SIG-B (A, C, E), HE-SIG-B containing information for the (A, C, E) bands, is transmitted in an alternating pattern across each 20MHz channel.

<186> FIG. 21(d) illustrates the transmission of an HE MU PPDU over the entire 160MHz bandwidth while utilizing only the Primary 20MHz, Secondary 40AMHz, and Secondary 80BMHz

channels. In this case, the BW bit field of HE-SIG-A signals all the utilized 20MHz channels in a bitmap format as shown in FIG. 21(e), and HE-SIG-B (A, C, F), HE-SIG-B containing information for the (A, C, F) bands, is transmitted in an alternating pattern across each 20MHz channel.

<187> The variable configuration of HE-SIG-B, as described above, can be recognized through the BW bitmap field of HE-SIG-A. In this case, the BW bitmap field of HE-SIG-A signals the possible combinations of S20, S40A, S40B, S80A, S80B, S80C, and S80D.

<189> FIG. 22 illustrates, according to an embodiment of the present invention, a method for configuring various HE PPDU bandwidth configurations when transmitting a PPDU using both a Non-Contiguous, Fixed Extension approach and a Contiguous, Flexible Extension approach.

<190> FIG. 22(a) shows all of the PPDU bandwidth options supported by the Non-Contiguous, Fixed Extension method, including the four PPDU BW options of conventional 11ac and the four new PPDU BW options presented in FIG. 17.

<191> P160, P80, P20+P40, P20+S40+S80, P20, P20+S80, P40, and P40+S80, totaling eight options, can be represented. To signal these configurations, the BW field in HE-SIG-A consists of 3 bits.

<192> FIG. 22(b) includes the four existing PPDU BW options of 11ac and the four new PPDU BW options described in FIG. 20, representing all PPDU BW options supported in the Contiguous,

Flexible Extension method.

<193> P160, P80+S80A+S80B+S80C, P80+S80A+S80B, P80+S80A, P80, P20+S40, P20+S40B, P40+S40B, P40+S40B+S80A, P40+S40B+S80A+S80B, P40+S40B+S80A+S80B+S80C, P40+S40B+S80, P20, P40, P40+S80A, P40+S80A+S80B, P40+S80A+S80B+S80C, and P40+S80, totaling 18 options, can be represented. To signal these configurations, the BW field in HE-SIG-A consists of 5 bits.

<195> Additionally, the method in FIG. 22(a) has the disadvantage that, as shown in FIG. 17, for PPDU BW configurations where transmission does not occur in the secondary 20MHz channel, the signaling burden of HE-SIG-B is increased on the primary 20MHz channel. To offset this, PPDU options that do not use the secondary 20MHz channel can be excluded from the BW options in FIG. 22(a). In this case, a total of five options, P160, P80, P20, P40, and P40+S80, can be represented. To signal these configurations, the BW field in HE-SIG-A consists of 3 bits.

<196> Additionally, the method in FIG. 22(b) has the disadvantage that, as shown in FIG. 20, for PPDU BW configurations where transmission does not occur in the secondary 20MHz channel, the signaling burden of HE-SIG-B is increased on the primary 20MHz channel. To offset this, PPDU options that do not use the secondary 20MHz channel can be excluded from the BW options in FIG. 22(b). In this case, a total of 16 options, P160, P80+S80A+S80B+S80C, P80+S80A+S80B, P80+S80A, P80, P40+S40B, P40+S40B+S80A, P40+S40B+S80A+S80B, P40+S40B+S80A+S80B+S80C, P40+S40B+S80, P20, P40, P40+S80A, P40+S80A+S80B,

P40+S80A+S80B+S80C, and P40+S80, can be represented. To signal these configurations, the BW field in HE-SIG-A consists of 4 bits.

<198> FIG. 23 illustrates a method of combining various HE PPDU BWs by integrating the combinations generated based on the principles of HE PPDU BW configuration according to an embodiment of the present invention.

<199> FIG. 23(a) illustrates a combination that mixes the method of FIG. 22(a) with the method of FIG. 22(b). In this case, by excluding the overlapping combinations from both methods and adding P20+S40+S80 and P20+S80 from FIG. 22(a) to FIG. 22(b), a total of 20 options can be represented in FIG. 23(a). To signal this, the BW field in HE-SIG-A is configured with a total of 5 bits.

<201> As illustrated in FIG. 23(b), the various BW options generated through the wideband PPDU configuration principles proposed in FIG. 11 may be subject to omission based on additional conditions such as the mandatory inclusion of a secondary 20MHz channel for HE-SIG-B, CCA requirements, and the allowable maximum number of non-contiguous bandwidths.

<202> Additionally, the various BW options generated by the wideband PPDU configuration principles may be implemented as combined BW options through arbitrary combination principles. In this case, the aforementioned additional conditions may be applied after the combination process to eliminate certain BW options.

<204> As described above, the present invention has been explained using wireless LAN communication as an example. However, the invention is not limited thereto and may be equally applied to other communication systems, including cellular communication. Furthermore, while the methods, devices, and systems of the present invention have been described in relation to specific embodiments, all or part of the components and operations of the invention may be implemented using a computer system with a general-purpose hardware architecture.

<205> The foregoing description of the present invention is provided for illustrative purposes, and the person having ordinary skill in the art of this field will understand that various modifications can be made without departing from the technical spirit or essential characteristics of the invention. Therefore, the embodiments described above should be interpreted as exemplary rather than limiting. For example, each component described as a single entity may be implemented in a distributed manner, and likewise, components described as being distributed may be implemented in a combined form.

<206> The scope of the present invention is defined by the following claims rather than the foregoing detailed description, and all modifications or variations derived from the meaning and scope of the claims and their equivalents should be construed as falling within the scope of the present invention.

【Description of Reference Numerals】

<207> 100: Station

200: Access Point

[What is claimed is]

[Claim 1]

A wireless communication method for a terminal,

wherein the method comprises,

receiving a wireless signal of a particular channel;

and using preamble information of the received wireless signal to obtain at least one of length information of the signal and full-length information of a corresponding data sequence.

[Summary]

[Abstract]

The present invention relates to apparatus, system, and method of wireless LAN communication for wireless LANs. According to an embodiment of the present invention, various methods, apparatuses, and systems for preventing inappropriate operations when BSS color collision occurred are provided.

[Representative Drawings]

FIG. 11

[Drawings]

[FIG. 1]

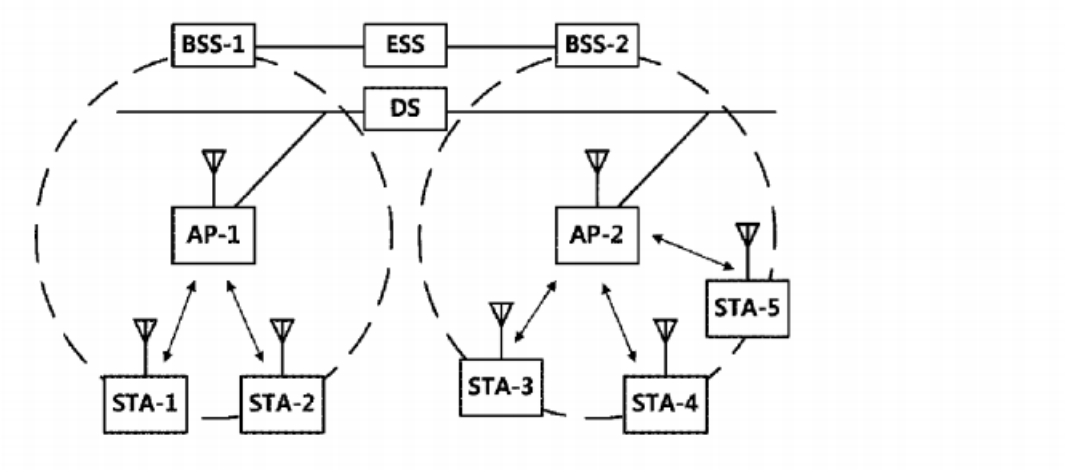

[FIG. 2]

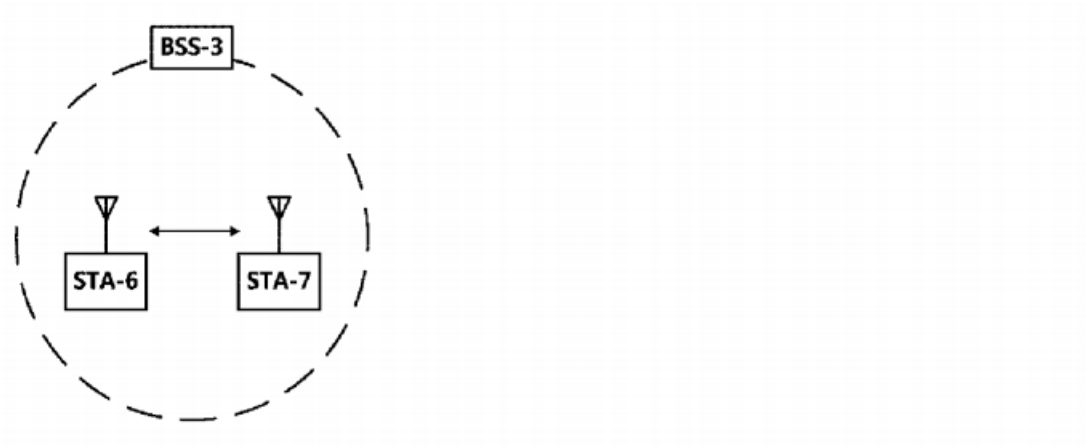

[FIG. 3]

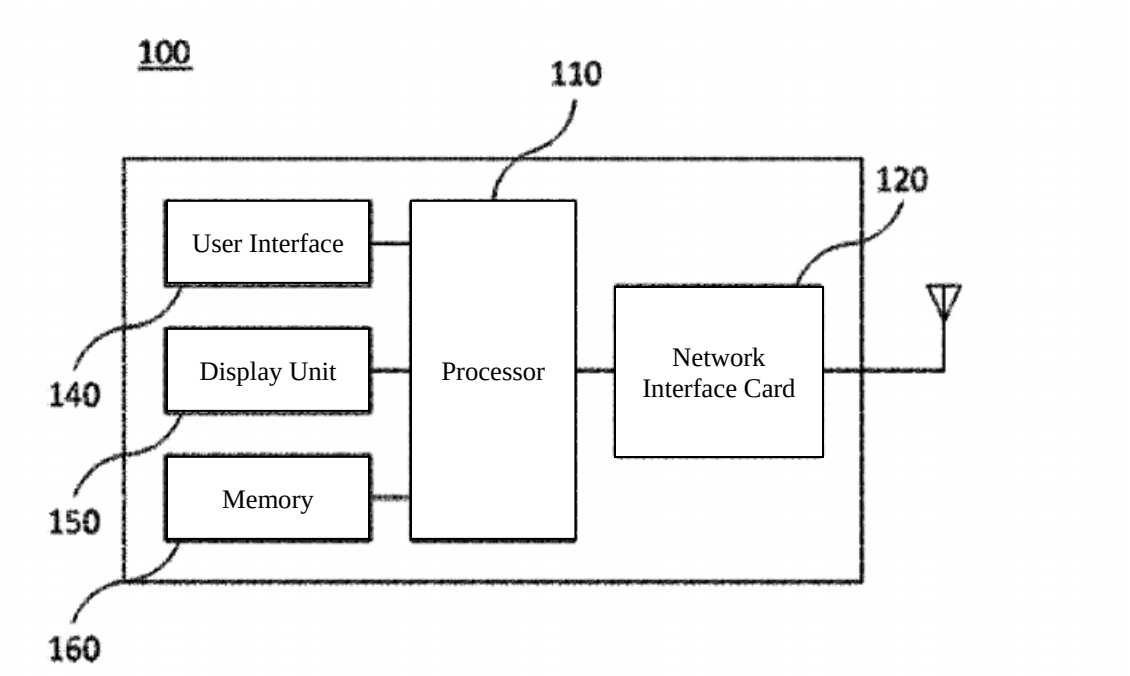
100
110
120
User Interface
Display Unit
Memory
Processor
Network
Interface Card
140
150
160

[FIG. 4]

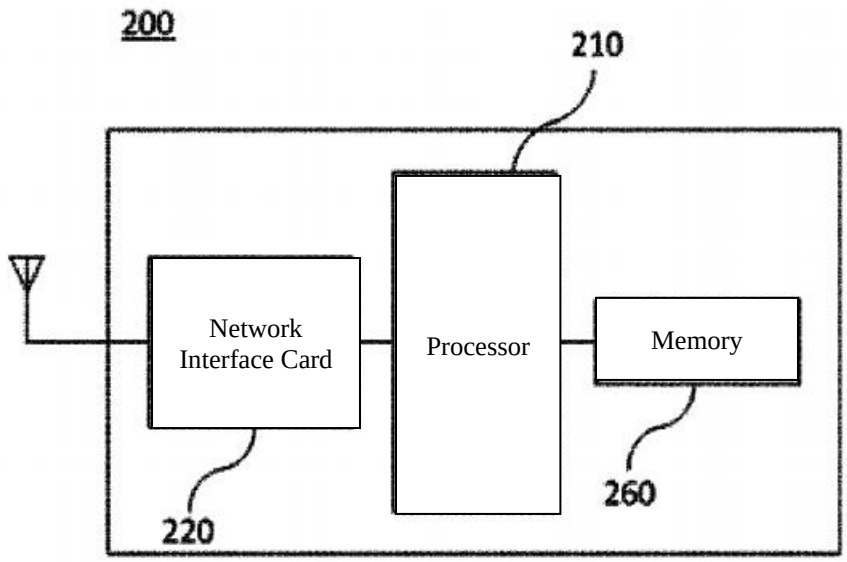
200
210
Network
Interface Card
Processor
Memory
220
260

[FIG. 5]

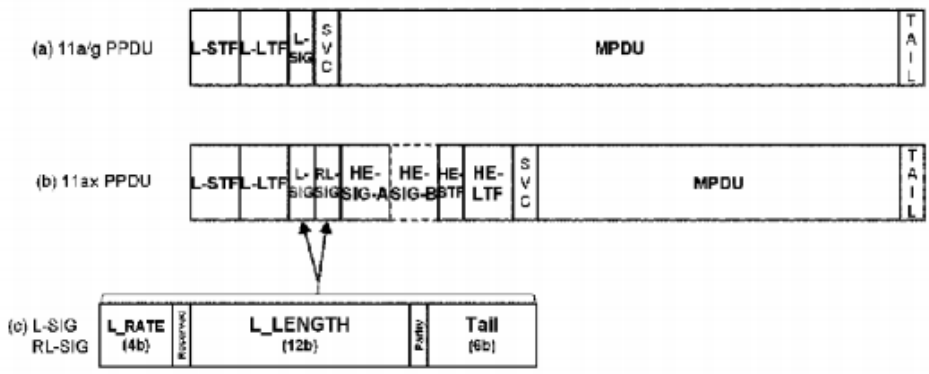

(d)

$$\text{PPDU_LENGTH(us)} = \left(1 + \left\lceil \frac{\text{L_LENGTH}}{3} \right\rceil\right) \times 4 + 20$$

$$\text{RXTIME(us)} = \left(\left\lceil \frac{\text{L_LENGTH}+3}{3} \right\rceil\right) \times 4 + 20$$

$$\text{L_LENGTH(byte)} = \left(\left\lceil \frac{\text{TXTIME}-20}{4} \right\rceil\right) \times 3 - 3$$

$$\text{TXTIME(us)} = T_{\text{L-STF}} + T_{\text{L-LTF}} + T_{\text{L-SIG}} + T_{\text{RL-SIG}} + T_{\text{HE-SIG-A}} + (T_{\text{HE-SIG-B}}) + T_{\text{HE-STF}} + N_{\text{HE-LTF}} \cdot T_{\text{HE-LTF}} + T_{\text{Data}}$$

[FIG. 6]

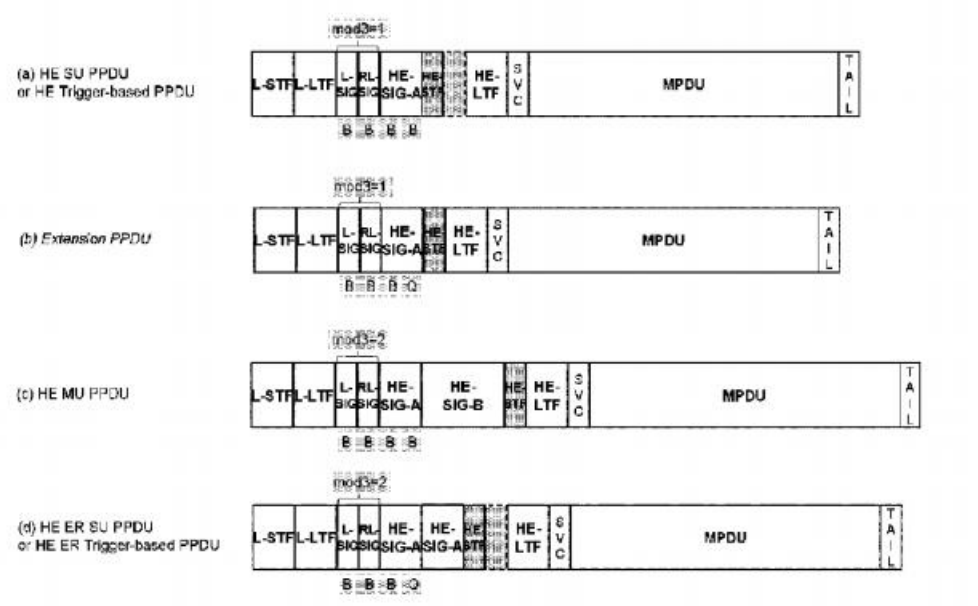
(a) HE SU PPDU
or HE Trigger-based PPDU
mod3=1
L-STF
L-LTF
L-SIG
RL-SIG
HE-SIG-A
HE-STF
HE-LTF
SVC
MPDU
TAIL
B B B B
(b) Extension PPDU
mod3=1
L-STF
L-LTF
L-SIG
RL-SIG
HE-SIG-A
HE-STF
HE-LTF
SVC
MPDU
TAIL
B B B Q
(c) HE MU PPDU
mod3=2
L-STF
L-LTF
L-SIG
RL-SIG
HE-SIG-A
HE-SIG-B
HE-STF
HE-LTF
SVC
MPDU
TAIL
B B B B
(d) HE ER SU PPDU
or HE ER Trigger-based PPDU
mod3=2
L-STF
L-LTF
L-SIG
RL-SIG
HE-SIG-A
HE-SIG-A
HE-STF
HE-LTF
SVC
MPDU
TAIL
B B B Q

[FIG. 7]

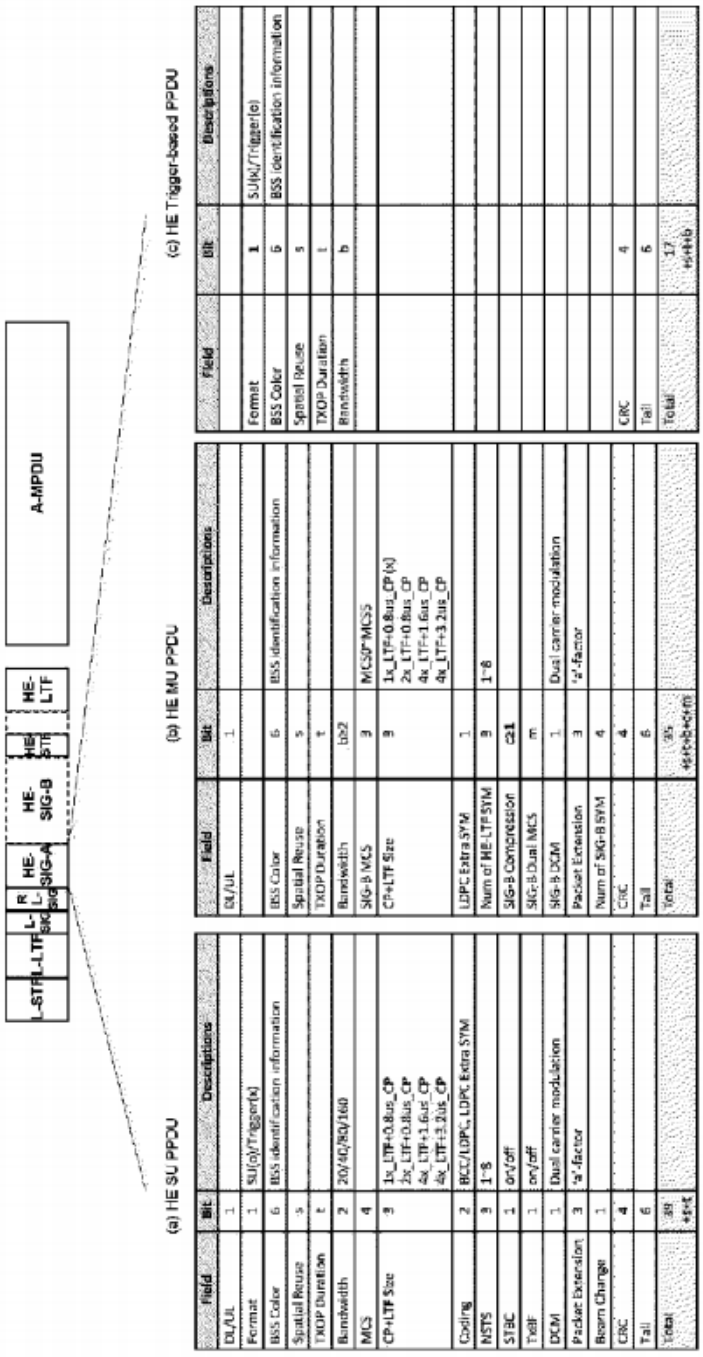

(a) HE SU PPDU

Field	Bit	Descriptions
DL/UL	1	
Format	1	SU(0)/Trigger(1)
BSS Color	6	BSS identification information
Spatial Reuse	5	
TXOP Duration	7	
Bandwidth	2	20/40/80/160
MCS	4	
CP+LTF Size	3	1x_LTF+0.8us_CP 2x_LTF+0.8us_CP 4x_LTF+1.6us_CP 4x_LTF+3.2us_CP
Coding	2	BCC/LDPC, LDPC Extra SYM
NSTS	3	1~8
STBC	1	on/off
TxBF	1	on/off
DCM	1	Dual carrier modulation
Packet Extension	3	'a'-factor
Beam Change	1	
CRC	4	
Tail	6	
Total	39 +1+4	

(b) HE MU PPDU

Field	Bit	Descriptions
DL/UL	1	
BSS Color	6	BSS identification information
Spatial Reuse	5	
TXOP Duration	7	
Bandwidth	bb2	
SIG-B MCS	3	MCS0~MCS5
CP+LTF Size	3	1x_LTF+0.8us_CP (x) 2x_LTF+0.8us_CP 4x_LTF+1.6us_CP 4x_LTF+3.2us_CP
LDPC Extra SYM	1	
Num of HE-LTF SYM	3	1~8
SIG-B Compression	c21	
SIG-B Dual MCS	m	
SIG-B DCM	1	Dual carrier modulation
Packet Extension	3	'a'-factor
Num of SIG-B SYM	4	
CRC	4	
Tail	6	
Total	35 +6+6+b+c+m	

(c) HE Trigger-based PPDU

Field	Bit	Descriptions
Format	1	SU(0)/Trigger(1)
BSS Color	6	BSS identification information
Spatial Reuse	5	
TXOP Duration	1	
Bandwidth	b	
CRC	4	
Tail	6	
Total	17 +6+4+b	

[FIG. 8]

(b) Resource Allocation

RA (8bits)	#1	#2	#3	#4	#5	#6	#7	#8	#9	Entries
000 0 0000	26	26	26	26	26	26	26	26	26	1
000 0 0001	26	26	26	26	26	26	26	52		1
000 0 0010	26	26	26	26	26	52	26	26		1
000 0 0011	26	26	26	26	26	52	52			1
000 0 0100	26	26	52	26	26	26	26	26		1
000 0 0101	26	26	52	26	26	26	52			1
000 0 0110	26	26	52	26	52	26	26			1
000 0 0111	26	26	52	26	52	52				1
000 0 1000	52	26	26	26	26	26	26	26		1
000 0 1001	52	26	26	26	26	26	52			1
000 0 1010	52	26	26	26	52	26	26			1
000 0 1011	52	26	26	26	52	52				1
000 0 1100	52	52	26	26	26	26	26			1
000 0 1101	52	52	26	26	26	52				1
000 0 1110	52	52	26	52	26	26				1
000 0 1111	52	52	26	52	52					1
000 1 xxxx	Definition TBD									16
00100 yyy	26	26	26	26	26	106				8
00101 yyy	26	26	52	26	106					8
00110 yyy	52	26	26	26	106					8
00111 yyy	52	52	26	106						8
01000 yyy	106		26	26	26	26	26			8
01001 yyy	106		26	26	26	52				8
01010 yyy	106		26	52	26	26				8
01011 yyy	106		26	52	52					8
011 xxxxx	Definition TBD									32
10 yyy yyy	106		26	106						64
11 0 00yyy	242									8
11 0 01yyy	484									8
11 0 10yyy	996									8
11 0 11yyy	2*996									8
11 1 xxxxx	Definition TBD									32
TBD	242 Null									1
TBD	484 Null									1
TBD	996 Null									1
TBD	Null									1

(a) HE-SIG-B

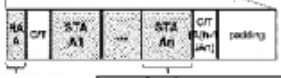

* CT: CRC/Tail

Field	Bits	Descriptions
RA	8	Resource Allocation
Total	8	

Field	Bit	Descriptions
AID	11	STA ID
NSTS	3	# of Spatial Streams
TxBF	1	TxBF on/off
MCS	4	
DCM	1	
Coding	1	BCC/LDPC
Total	21	

(c)-1 OFDMA user specific information

Field	Bit	Descriptions
AID	11	STA ID
SCF	4	Spatial Conf. Fields
MCS	4	
DCM	1	
Coding	1	BCC/LDPC
Total	23	

(c)-2 MU-MIMO user specific information

[FIG. 9]

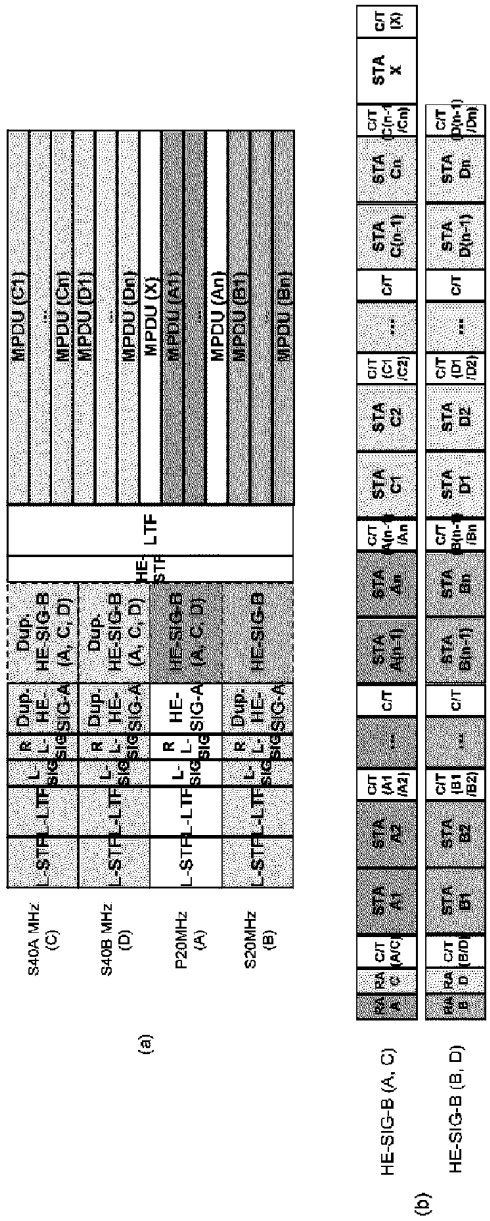
S40A MHz (C)
S40B MHz (D)
P20MHz (A)
S20MHz (B)
L-STF
L-LTF
R L-SIG
Dup. HE-SIG-A
Dup. HE-SIG-B (A, C, D)
HE-STF
HE-LTF
MPDU (C1)
MPDU (Cn)
MPDU (D1)
MPDU (Dn)
MPDU (X)
MPDU (A1)
MPDU (An)
MPDU (B1)
MPDU (Bn)
(a)
RA A
RA C
C/T (A/C)
STA A1
STA A2
C/T (A1 /A2)
STA A(n-1)
STA An
C/T (An-1 /An)
STA C1
STA C2
C/T (C1 /C2)
STA C(n-1)
STA Cn
C/T (Cn-1 /Cn)
STA X
C/T (X)
RA B
RA D
C/T (B/D)
STA B1
STA B2
C/T (B1 /B2)
STA B(n-1)
STA Bn
C/T (Bn-1 /Bn)
STA D1
STA D2
C/T (D1 /D2)
STA D(n-1)
STA Dn
C/T (Dn-1 /Dn)
HE-SIG-B (A, C)
HE-SIG-B (B, D)
(b)

[FIG. 10]

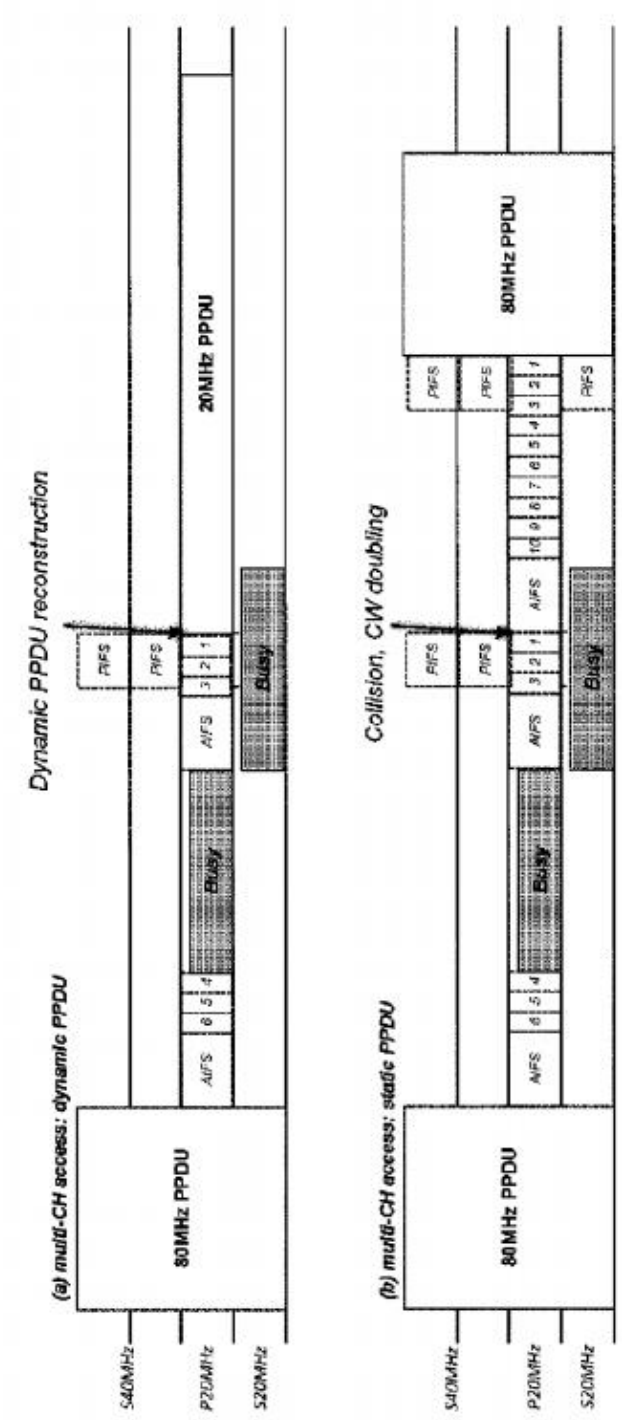
(a) multi-CH access: dynamic PPDU
Dynamic PPDU reconstruction
S40MHz
P20MHz
S20MHz
80MHz PPDU
AIFS
PIFS
Busy
20MHz PPDU
(b) multi-CH access: static PPDU
Collision, CW doubling
80MHz PPDU

[FIG. 11]

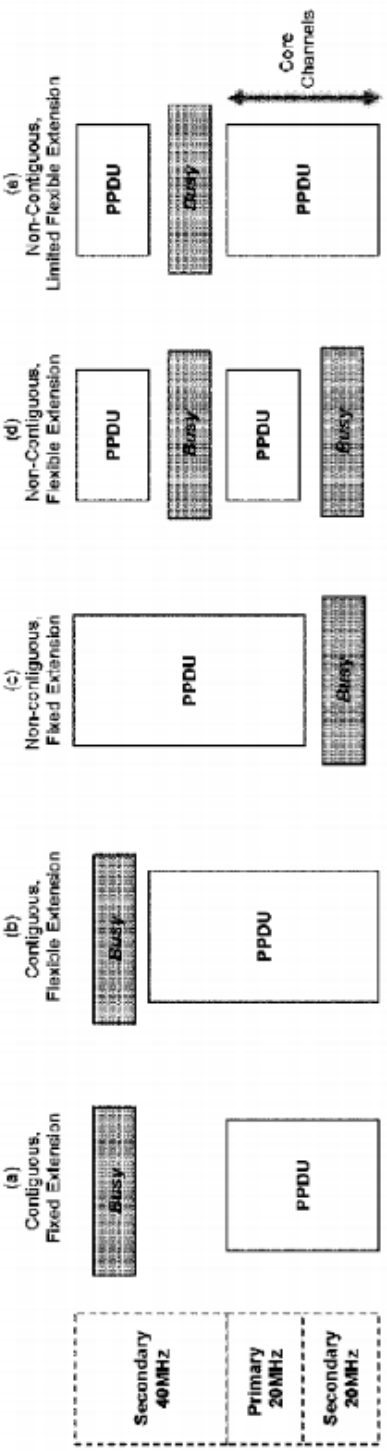

	Cont., Fixed Ext. (Current)	Cont., Flexible Ext.	Non-Cont., Fixed Ext.	Non-Cont., Flexible Ext.	Non-Cont. Flexible Ext. (Limited)
Channel Utilization	Low	Middle	Middle	High	Middle~High
CCA complexity	Low P20, S20, S40, S80 (4 CCA results)	High Per 20MHz CCA (8 CCA results)	Low P20, S20, S40, S80 (4 parallel CCA results)	High Per 20MHz CCA (8 parallel CCA results)	High Per 20MHz CCA (8 parallel CCA results)

[FIG. 12]

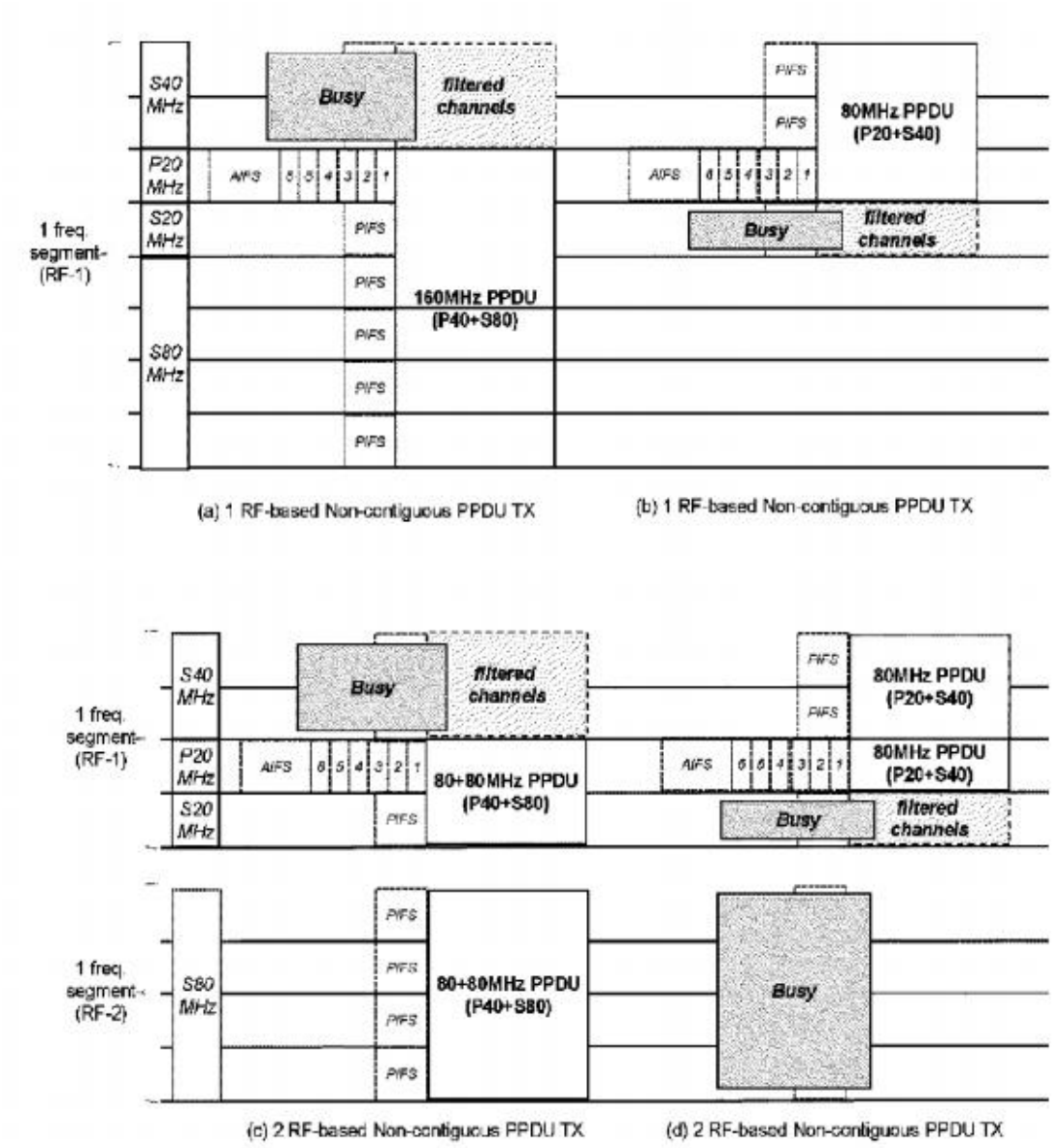
S40 MHz
P20 MHz
S20 MHz
S80 MHz
1 freq. segment-(RF-1)
Busy
filtered channels
AIFS
PIFS
160MHz PPDU (P40+S80)
80MHz PPDU (P20+S40)
(a) 1 RF-based Non-contiguous PPDU TX
(b) 1 RF-based Non-contiguous PPDU TX
1 freq. segment-(RF-1)
1 freq. segment-(RF-2)
80+80MHz PPDU (P40+S80)
(c) 2 RF-based Non-contiguous PPDU TX
(d) 2 RF-based Non-contiguous PPDU TX

[FIG. 13]

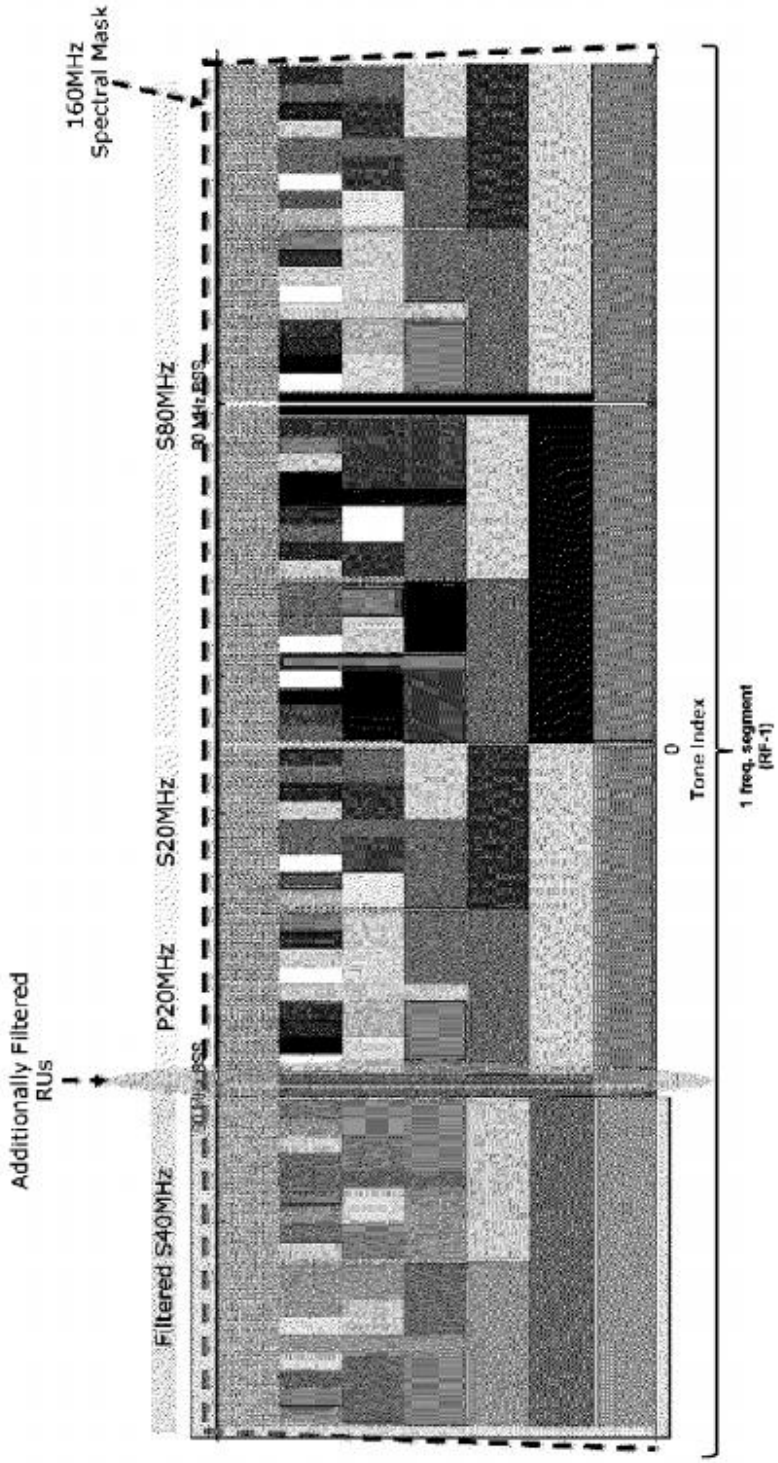
160MHz
Spectral Mask
S80MHz
S20MHz
P20MHz
Additionally Filtered
RUs
Filtered S40MHz
0
Tone Index
1 freq. segment
(RF-1)

[FIG. 14]

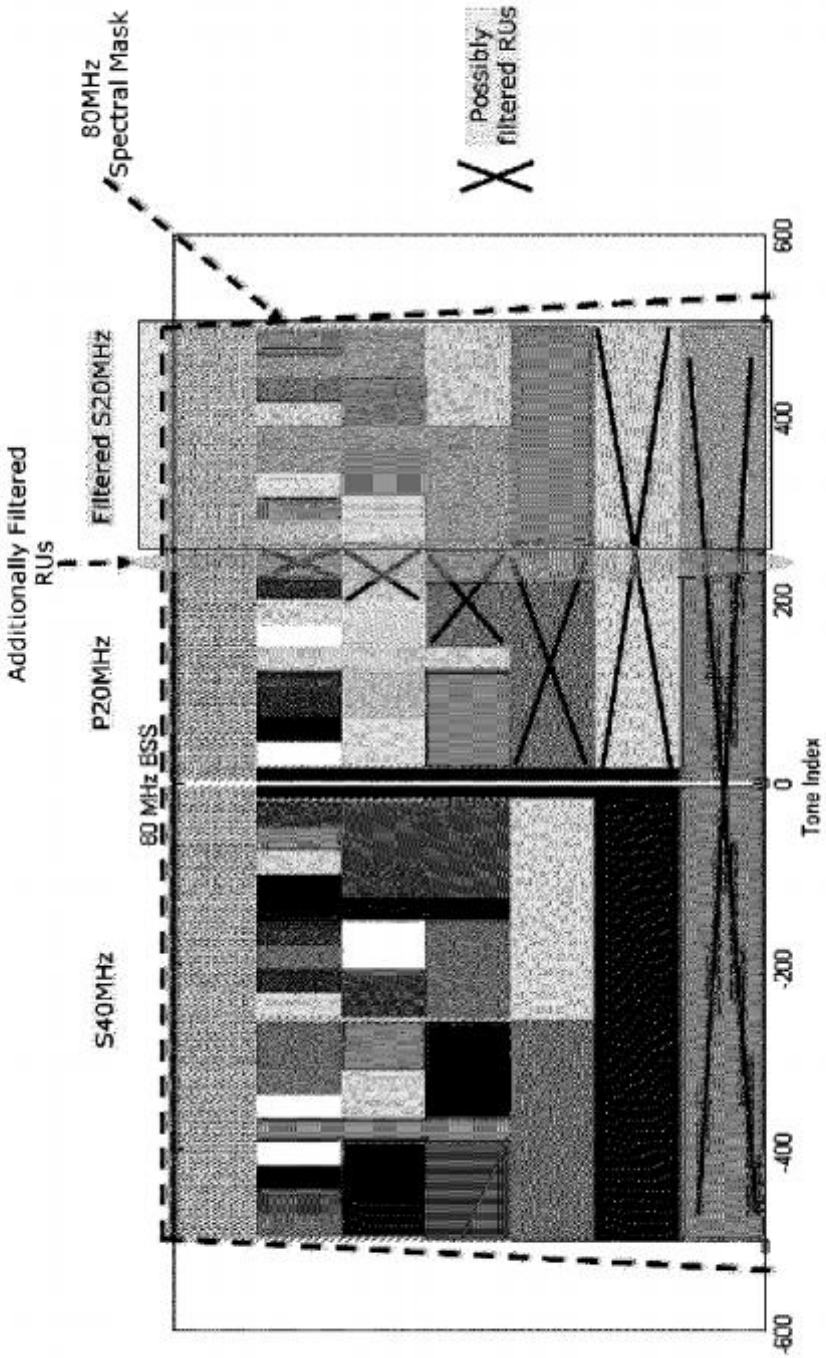
80MHz
Spectral Mask
Possibly
filtered RUs
Additionally Filtered
RUs
Filtered S20MHz
P20MHz
80 MHz BSS
S40MHz
600
400
200
0
-200
-400
-600
Tone Index

[FIG. 15]

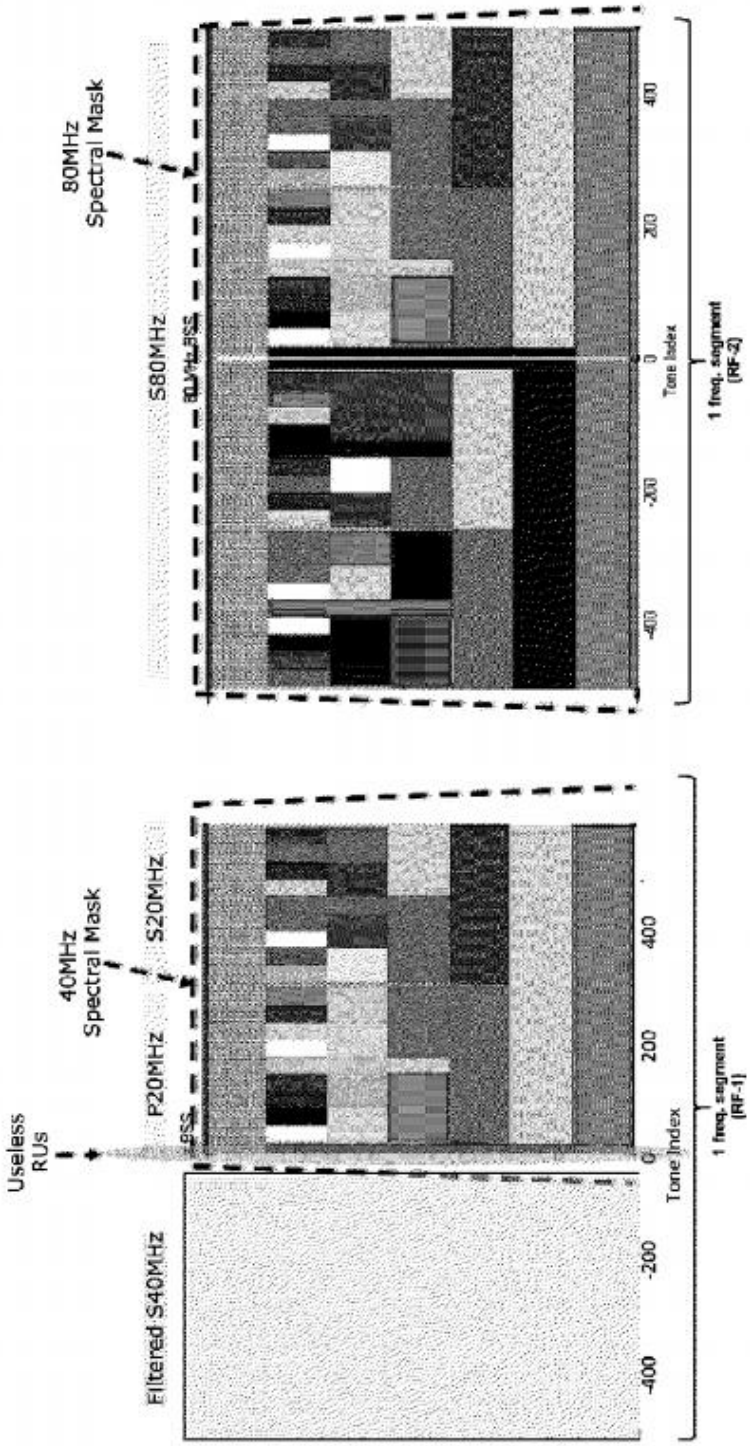
80MHz
Spectral Mask
S80MHz
80MHz BSS
400
200
0
-200
-400
Tone Index
1 freq. segment
(RF-2)
Useless
RUs
40MHz
Spectral Mask
S20MHz
P20MHz
BSS
Filtered S40MHz
400
200
0
-200
-400
Tone Index
1 freq. segment
(RF-1)

[FIG. 16]

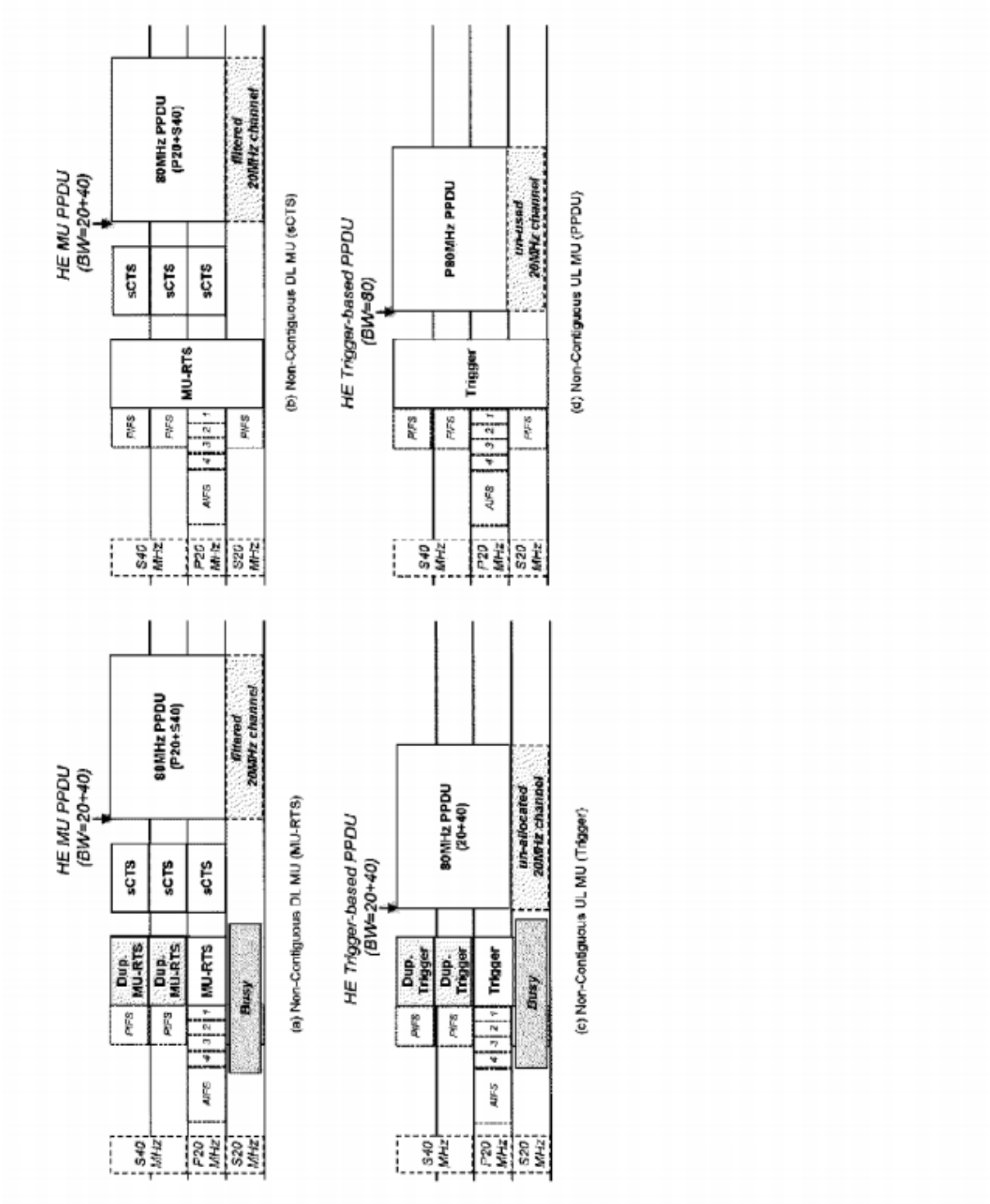
HE MU PPDU
(BW=20+40)
Dup. MU-RTS
Dup. MU-RTS
MU-RTS
sCTS
sCTS
sCTS
80MHz PPDU
(P20+S40)
filtered 20MHz channel
Busy
S40 MHz
P20 MHz
S20 MHz
PIFS
AIFS
(a) Non-Contiguous DL MU (MU-RTS)
HE MU PPDU
(BW=20+40)
MU-RTS
sCTS
sCTS
sCTS
80MHz PPDU
(P20+S40)
filtered 20MHz channel
(b) Non-Contiguous DL MU (sCTS)
HE Trigger-based PPDU
(BW=20+40)
Dup. Trigger
Dup. Trigger
Trigger
80MHz PPDU
(20+40)
un-allocated 20MHz channel
Busy
(c) Non-Contiguous UL MU (Trigger)
HE Trigger-based PPDU
(BW=80)
Trigger
P80MHz PPDU
un-used 20MHz channel
(d) Non-Contiguous UL MU (PPDU)

[FIG. 17]

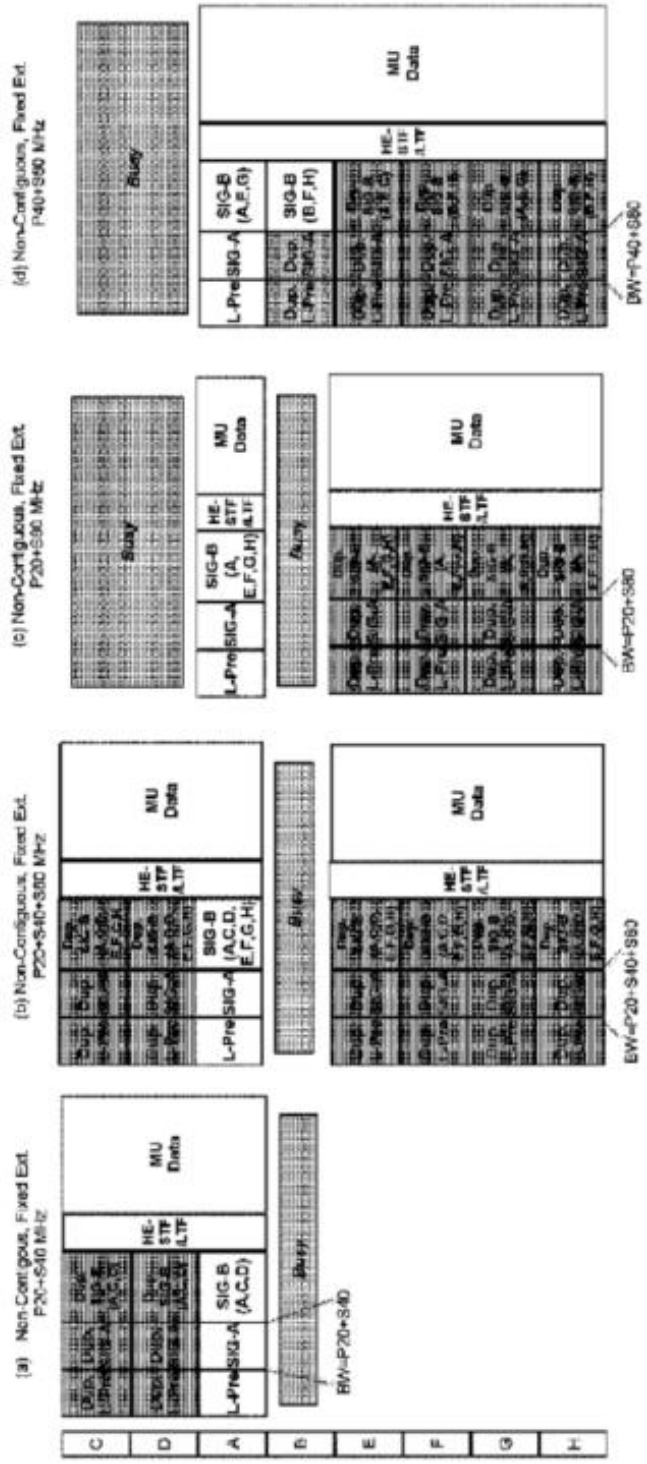
(a) Non-Contiguous, Fixed Ext.
P20+540 MHz
(b) Non-Contiguous, Fixed Ext.
P20+540+580 MHz
(c) Non-Contiguous, Fixed Ext.
P20+580 MHz
(d) Non-Contiguous, Fixed Ext.
P40+580 MHz
C
D
A
B
E
F
G
H
L-Pre
SIG-A
SIG-B (A,C,D)
SIG-B (A,C,D, E,F,G,H)
SIG-B (A, E,F,G,H)
SIG-B (B,F,H)
HE-STF LTF
MU Data
Busy
BW=P20+540
BW=P20+540+580
BW=P20+580
BW=P40+580

[FIG. 18]

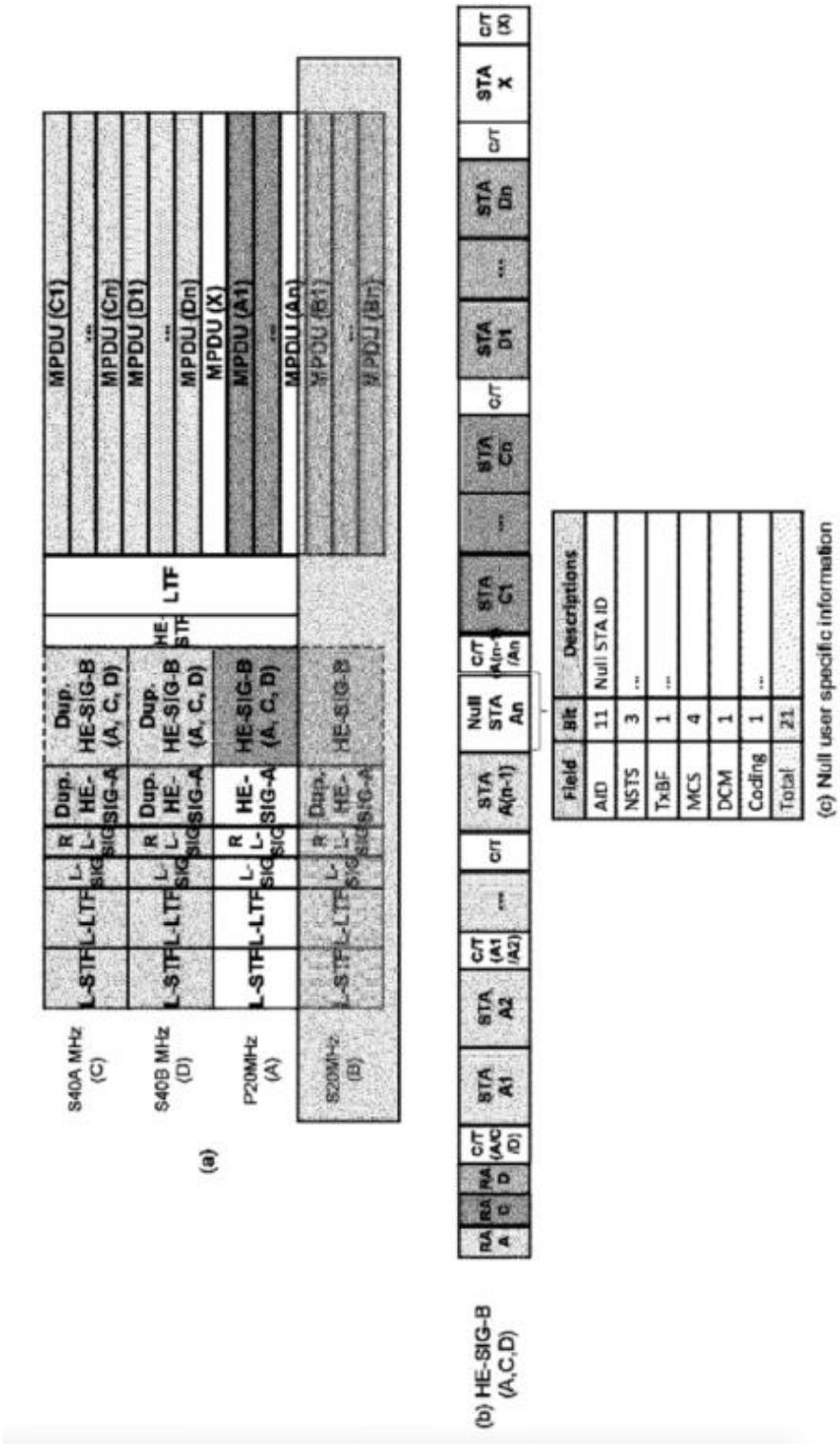
S40A MHz (C)
S40B MHz (D)
P20MHz (A)
S20MHz (B)
L-STF
L-LTF
L-SIG
R
Dup. HE-SIG-A
Dup. HE-SIG-B (A, C, D)
HE-SIG-B (A, C, D)
HE-SIG-B
HE-STF
LTF
MPDU (C1)
MPDU (Cm)
MPDU (D1)
MPDU (Dn)
MPDU (X)
MPDU (A1)
MPDU (An)
MPDU (B1)
MPDU (Bn)
(a)
RA A
RA B
RA D
C/T (AC/D)
STA A1
STA A2
C/T (A1/A2)
C/T
STA A(n-1)
Null STA An
C/T (A(n-1)/An)
STA C1
STA Cn
C/T
STA D1
STA Dn
C/T
STA X
C/T (X)
(b) HE-SIG-B (A,C,D)
Field
Bit
Descriptions
AID
11
Null STA ID
NSTS
3
TxBF
1
MCS
4
DCM
1
Coding
1
Total
21
(c) Null user specific information

[FIG. 19]

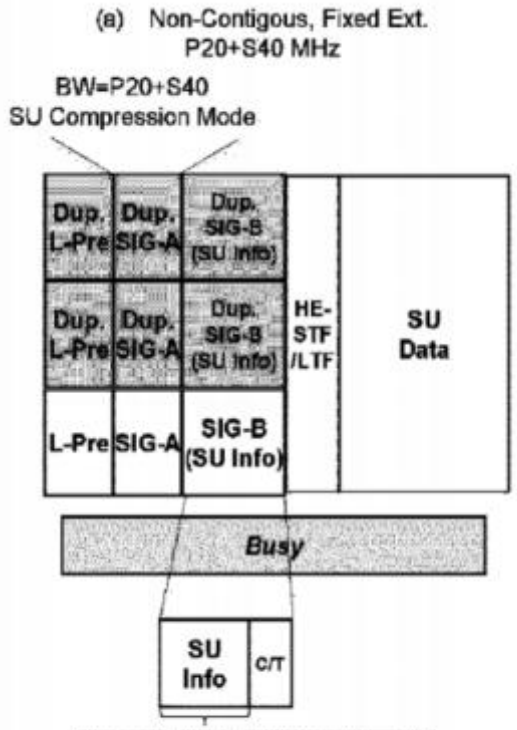

Field	Bit	Descriptions
AID	11	STA ID
NSTS	3	# of Spatial Streams
TxBF	1	TxBF on/off
MCS	4	
DCM	1	
Coding	1	BCC/LDPC
Total	21	

user specific information

[FIG. 20]

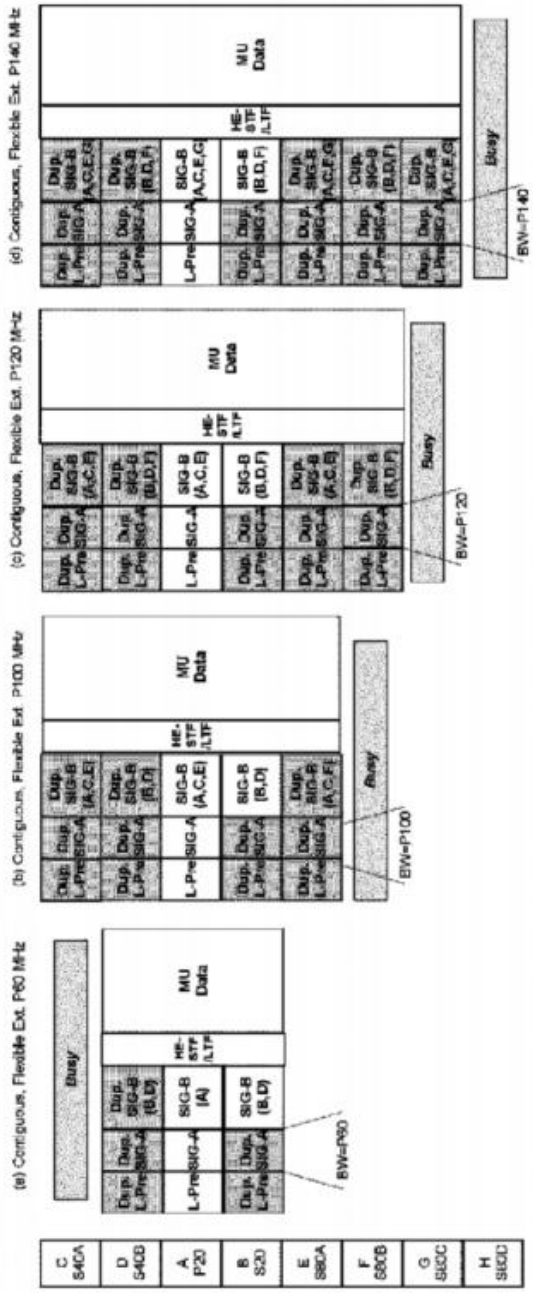
(a) Contiguous, Flexible Ext. P80 MHz
(b) Contiguous, Flexible Ext. P100 MHz
(c) Contiguous, Flexible Ext. P120 MHz
(d) Contiguous, Flexible Ext. P140 MHz
C S40A
D S40B
A P20
B S20
E S80A
F S80B
G S80C
H S80D
Busy
MU Data
HE-STF /LTF
L-PreSIG-A
Dup. L-PreSIG-A
SIG-A
Dup. SIG-A
SIG-B (A)
Dup. SIG-B (B,D)
SIG-B (A,C,E)
Dup. SIG-B (A,C,E)
SIG-B (A,C,E,G)
Dup. SIG-B (A,C,E,G)
BW=P80
BW=P100
BW=P120
BW=P140

[FIG. 21]

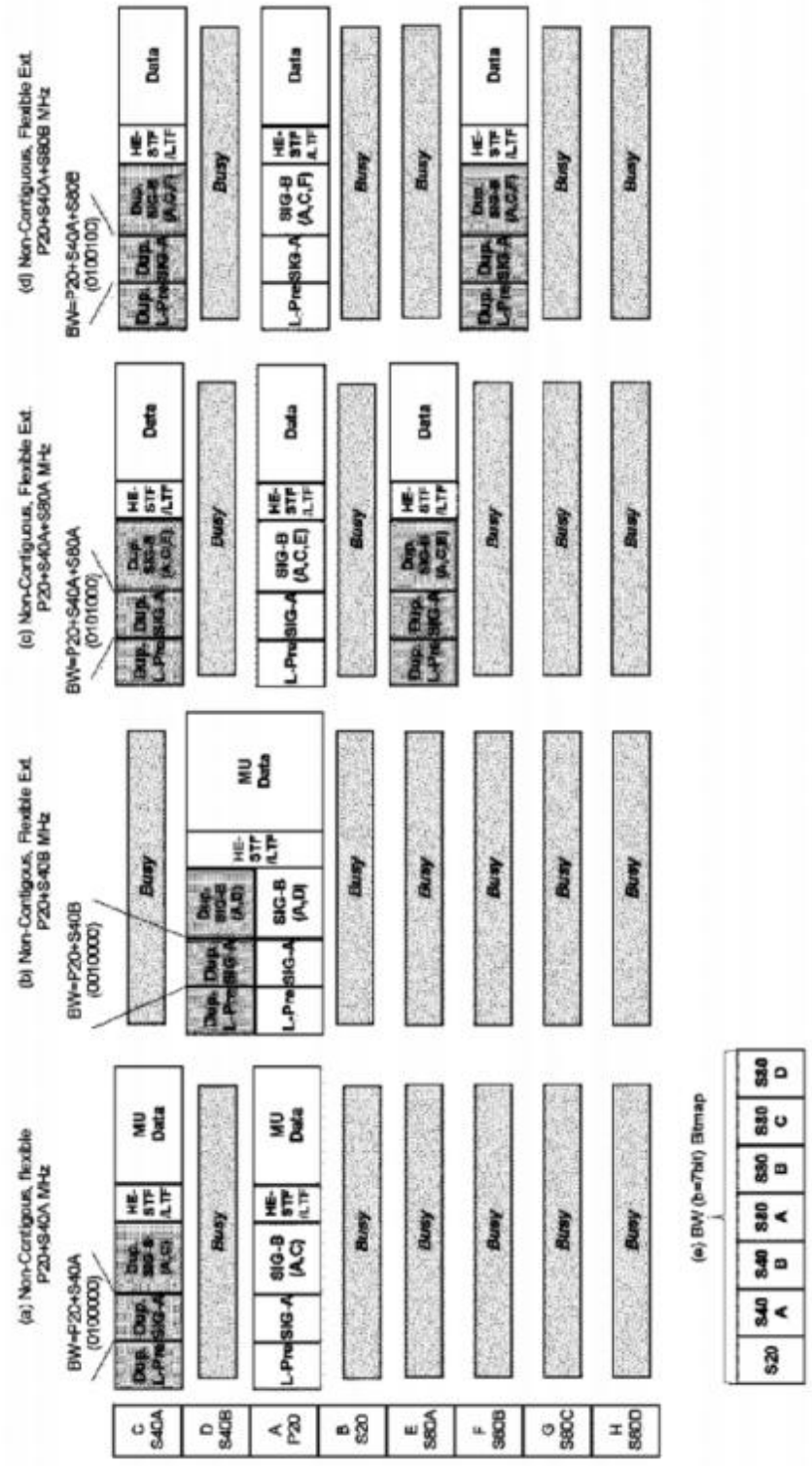
(a) Non-Contiguous, flexible
P20+S40A MHz
BW=P20+S40A
(0100000)
Dup. L-PreSIG-A
Dup. SIG-B (A,C)
HE-STF /LTF
MU Data
Busy
L-PreSIG-A
SIG-B (A,C)
HE-STF /LTF
MU Data
Busy
Busy
Busy
Busy
Busy
(b) Non-Contiguous, Flexible Ext.
P20+S40B MHz
BW=P20+S40B
(0010000)
Dup. L-PreSIG-A
Dup. SIG-B (A,D)
HE-STF /LTF
MU Data
Busy
L-PreSIG-A
SIG-B (A,D)
Busy
Busy
Busy
Busy
Busy
(c) Non-Contiguous, Flexible Ext.
P20+S40A+S80A MHz
BW=P20+S40A+S80A
(0101000)
Dup. L-PreSIG-A
Dup. SIG-B (A,C,E)
HE-STF /LTF
Data
Busy
L-PreSIG-A
SIG-B (A,C,E)
HE-STF /LTF
Data
Busy
Busy
Busy
Busy
Busy
(d) Non-Contiguous, Flexible Ext.
P20+S40A+S80B MHz
BW=P20+S40A+S80B
(0100010)
Dup. L-PreSIG-A
Dup. SIG-B (A,C,F)
HE-STF /LTF
Data
Busy
L-PreSIG-A
SIG-B (A,C,F)
HE-STF /LTF
Data
Busy
Busy
Busy
Busy
Busy
C S40A
D S40B
A P20
B S20
E S80A
F S80B
G S80C
H S80D
(e) BW (b=7bit) Bitmap
S20
S40 A
S40 B
S80 A
S80 B
S80 C
S80 D

[FIG. 22]

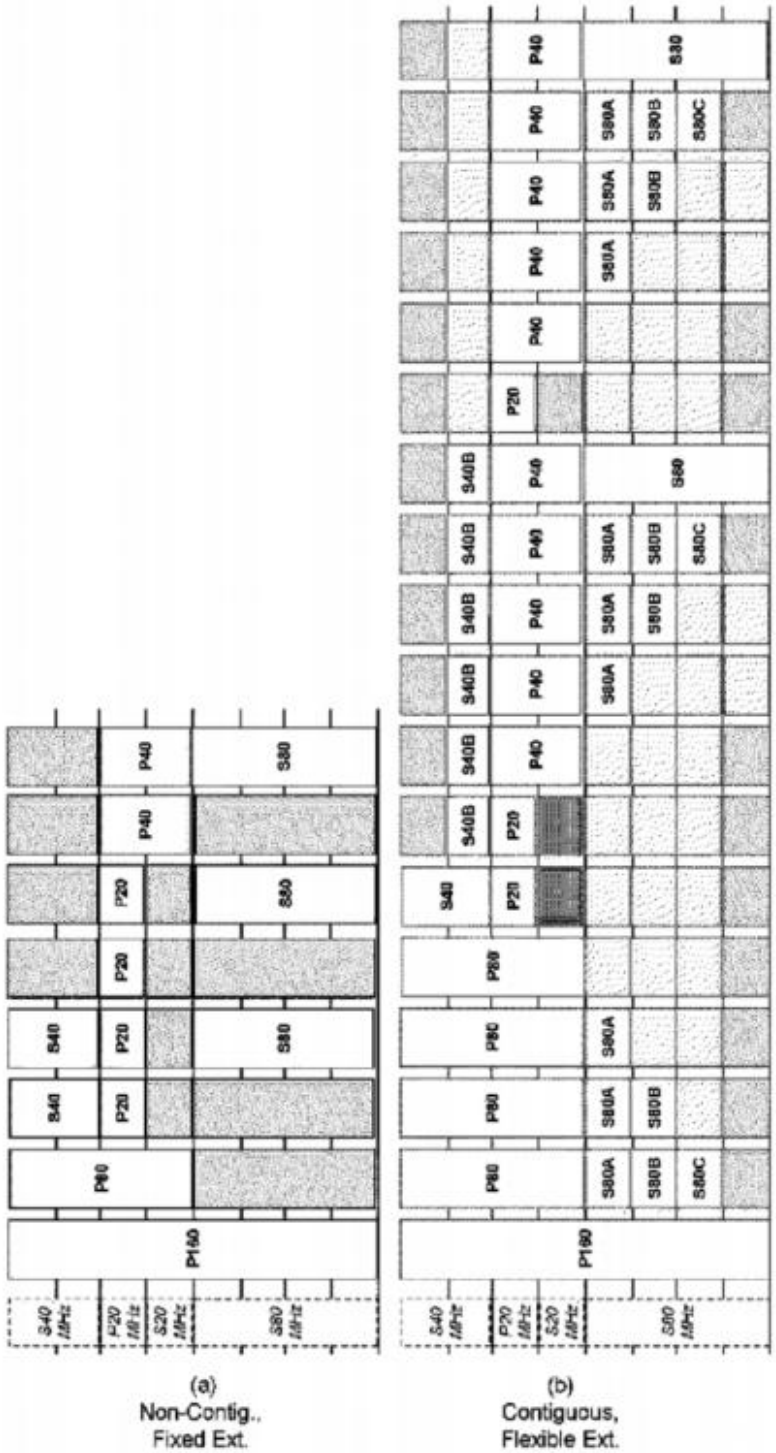
40 MHz
20 MHz
20 MHz
80 MHz
P160
P80
S40
P20
P20
S40
P20
P20
S80
P40
P40
S80
(a)
Non-Contig.,
Fixed Ext.
40 MHz
20 MHz
20 MHz
80 MHz
P160
P80
P80
P80
S40
P20
S40B
P20
S40B
S40B
S40B
S40B
P40
P40
P40
P40
P40
P40
P40
P40
S80A
S80B
S80C
S80A
S80B
S80A
S80A
S80A
S80A
S80B
S80A
S80B
S80C
S80
S80
S80
(b)
Contiguous,
Flexible Ext.

[FIG. 23]

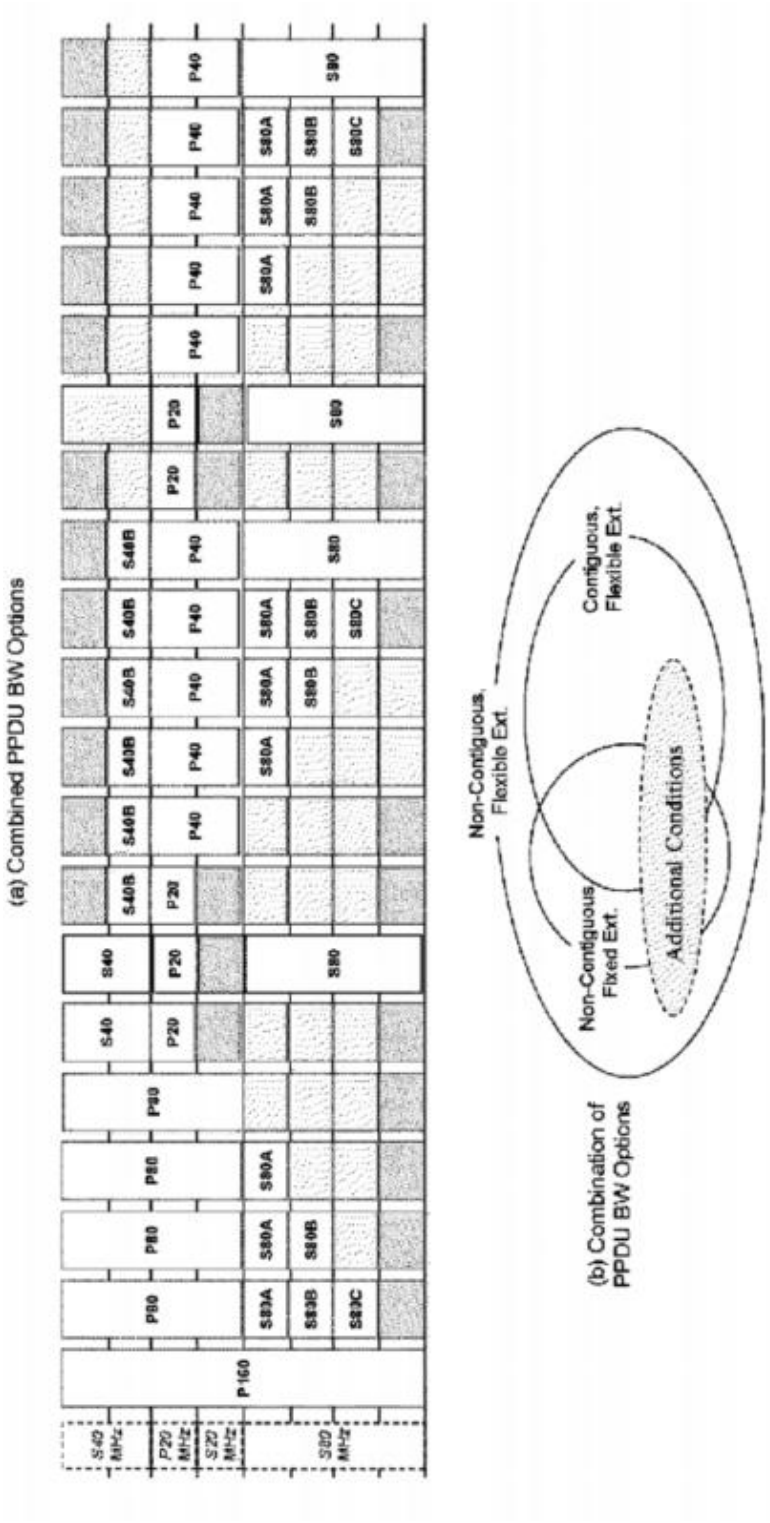
(a) Combined PPDU BW Options
40 MHz
20 MHz
20 MHz
80 MHz
P160
P80
P80
P80
P80
S40
S40
S40B
S40B
S40B
S40B
S40B
S40B
P20
P20
P20
P20
P20
P20
P40
P40
P40
P40
P40
P40
P40
P40
S80
S80
S80A
S80A
S80A
S80A
S80A
S80A
S80B
S80B
S80B
S80B
S80B
S80B
S80C
S80C
S80C
S80C
S80
S80
S80
S80
(b) Combination of PPDU BW Options
Non-Contiguous, Flexible Ext.
Contiguous, Flexible Ext.
Non-Contiguous, Fixed Ext.
Additional Conditions