Trials@uspto.gov
571-272-7822

Paper: 7.
Date: January 23, 2025.

UNITED STATES PATENT AND TRADEMARK OFFICE

BEFORE THE PATENT TRIAL AND APPEAL BOARD

IMPERATIVE CARE, INC.,
Petitioner,

v.

INARI MEDICAL, INC.,
Patent Owner.

IPR2024-01157
Patent 11,697,011 B2

Before JEFFREY N. FREDMAN, ERIC C. JESCHKE, and TIMOTHY G. MAJORS, *Administrative Patent Judges.*

MAJORS, *Administrative Patent Judge*.

DECISION
Granting Institution of *Inter Partes* Review
35 U.S.C. § 314

Imperative Care v. Inari Medical
US Patent 11,865,291
Imperative Care Ex. 1017

I. INTRODUCTION

Imperative Care, Inc. ("Petitioner") filed a Petition (Paper 1, "Pet.") requesting *inter partes* review of claims 1–9 of U.S. Patent No. 11,697,011 B2 (Ex. 1001, "the '011 patent"). Pet. 1, 15. Inari Medical, Inc. ("Patent Owner") filed a Preliminary Response (Paper 5, "Prelim. Resp.").

Under 35 U.S.C. § 314(a), an *inter partes* review may not be instituted unless it is determined that there is a reasonable likelihood that the petitioner will prevail with respect to at least one of the claims challenged in the petition. For reasons explained below, we conclude that Petitioner shows a reasonable likelihood that it will prevail with respect to at least one of the '011 patent's challenged claims. We institute *inter partes* review on all challenged claims. *See SAS Inst. Inc. v. Iancu*, 138 S. Ct. 1348, 1355 (2018).

Findings and conclusions at this stage are preliminary and based on the current record. Any final decision will be based on a full trial record.

II. BACKGROUND

A. Real Parties-in-Interest

Petitioner identifies itself as the real party-in-interest. Pet. 86. Patent Owner identifies itself as the real party-in-interest. Paper 6, 2.

B. Related Matters

The parties identify the following lawsuit involving assertion of the '011 patent (and additional patents): *Inari Medical Inc. v. Imperative Care, Inc.*, No. 24-cv-3117 (N.D. Cal.).[1] Pet. 86; Paper 6, 2.

Patent Owner also identifies related matters before the Board. Paper 6, 2–3. Specifically, Patent Owner identifies IPR2025-00156 as

[1] Patent Owner further states that *Inari Medical, Inc. v. Inquis Medical, Inc.*, No. 24-1023-CFC (D. Del.) "may involve related issues." Paper 6, 2.

challenging "U.S. Patent No. 11,697,012, which is related by priority to the involved '011 Patent," and IPR2024-01257 as "challenging the claims of U.S. Patent No. 11,744,691, which is not related by priority to the involved '011 Patent but may involve related issues." *Id.* Both IPR2025-00156 and IPR2024-01257 were filed by Petitioner. *Id.*

Patent Owner further identifies additional patents and patent applications as being related by a priority claim to the '011 patent. *Id.* at 3 (identifying, e.g., U.S. Patent Nos. 11,865,291 and 11,000,682).

C. The '011 Patent (Ex. 1001)

The '011 is titled "Hemostasis Valves and Methods of Use." Ex. 1001, code (54). The '011 patent issued July 11, 2023, from an application filed March 25, 2022. *Id.* at codes (22), (45). The patent claims the priority benefit of earlier non-provisional applications and a provisional application that was filed September 6, 2017. *Id.* at code (60), (63).

According to the '011 patent, "the desire for improved patient outcomes has led to the development of hemostasis valves that facilitate minimally invasive surgery." *Id.* at 1:27–29. "In minimally invasive surgery, small incisions are created through a blood vessel [into] which one or several catheters are inserted." *Id.* at 1:30–32. "These catheters are moved to a position proximate to tissue, nerves, or other body structures targeted by the surgery, and then tools for performing the procedure are inserted through the lumens of some or all of these catheters." *Id.* at 1:33–37. Moreover, the patent explains, "[t]o minimize blood loss, prevent delivery of air into the vasculature, and to facilitate maintenance of sterility within the patient's body . . . , these catheters are equipped with hemostasis valves." *Id.* at 1:38–41. According to the '011 patent, there is a desire for

"new and improved" hemostasis valves, and the patent aims to describe such a valve. *Id.* at 1:56; *see also id.* at 1:61–5:19 ("Summary").

In summary, the '011 patent discloses that "[t]he valve can include a tubular [elongate] member that can be constricted, collapsed, and/or sealed by one or several tensioning mechanisms." *Id.* at 1:62–65. According to the patent, "[t]he tensioning mechanism can include at least one filament that extends around at least a portion of the tubular member," and such "filament can interact with the tubular member to constrict, collapse, and/or seal the tubular member via manipulation of the tensioning mechanism(s)." *Id.* at 1:65–2:8 (disclosing that such valve, by action of the tensioning mechanism and filament, "can seal around a wide range of tool sizes and shapes" that are passed through the tubular member). The patent further discloses that, in embodiments, the tensioning mechanism can include an actuator coupled to the filament, which actuator can be operated to control movement of the filament from a first position (where the central lumen is constricted and sealed) to a second position (where the central lumen is un-constricted and open). *Id.* at 2:47–60. Moreover, the patent explains, an actuator can be biased toward the first or second positions. *Id.* at 2:60–62.

We reproduce below the '011 patent's Figure 2 including annotations provided by Petitioner, with additional annotations added by the Board.

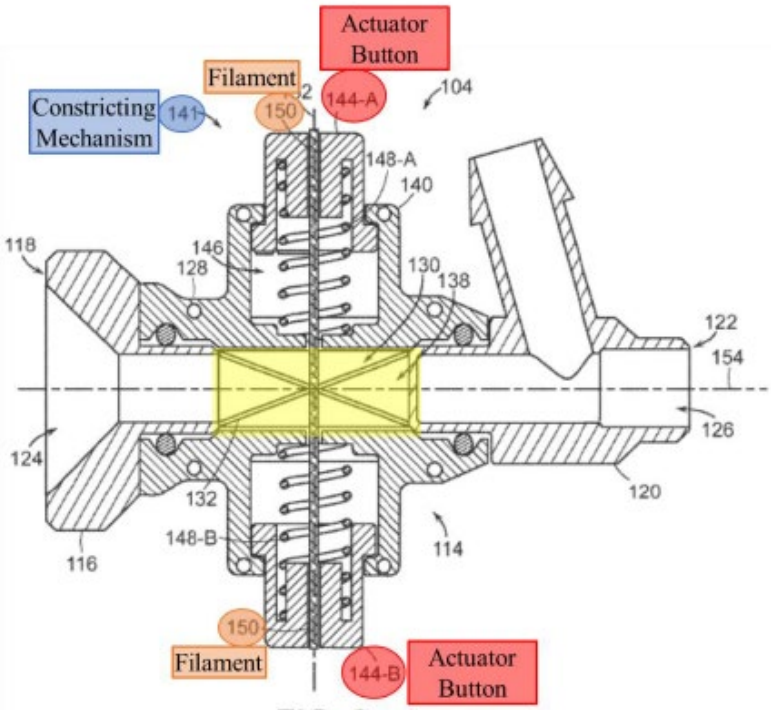

FIG. 2

Pet. 8 (modified by yellow highlight added by Board); Ex. 1001, 8:1–53, Fig. 2. Figure 2, as depicted above, is a side cross-sectional view of an embodiment of valve (104) described in the ’011 patent. Ex. 1001, 5:25–26. The valve includes housing 128, elongate member 132 defining a central lumen 138 and having a central axis 154, constricting mechanism 141 (blue highlight), filament 150 (orange highlights), and oppositely disposed actuator buttons 144-A and 144-B (red highlights). *Id.* at 8:1–9:25. In this embodiment, the filament is disposed at least partially around the elongate member and coupled to both actuator buttons (which are undepressed); the buttons are biased towards a first (i.e., closed) configuration by a bias feature (e.g., coil springs 148A, 148B) wherein the elongate member is collapsed and sealed in the region highlighted yellow (central lumen 138) by a tension/force applied to the filament. *Id.* Although not shown in the figure above, when the actuator buttons are depressed, the constricting mechanism moves to a second (i.e., open) configuration where the filament is loosened,

allowing expansion of the elongate member and unsealing of the central lumen. *Id.* at 9:51–59, Fig. 3 (showing open configuration).

According to the ’011 patent, the “filament 150 can be arranged in a variety of configurations.” Ex. 1001, 13:29–30. In some embodiments, the filament can comprise a “single loop 604 that can extend around the elongate member” or the filament may comprise a “U-shaped section” or “bight.” *Id.* at 13:30–54 (disclosing that “filament 150 can be configured to form a bight 800, which bight 800 can be a single bight or multiple bights” and “[a]s used herein, a ‘bight’ refers to a U-shaped section between the two ends of the filament 150”). The patent further discloses that the “filament can be made from a variety of materials including, for example, a polymer, a synthetic, and/or a metal.” *Id.* at 9:10–13.

Figures 6–9 of the ’011 patent are reproduced below and depict multiple filament configurations.

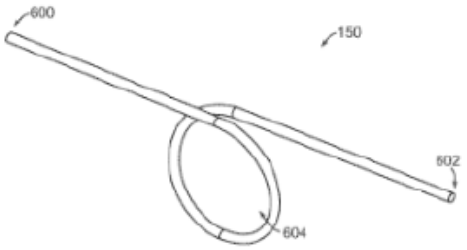

FIG. 6

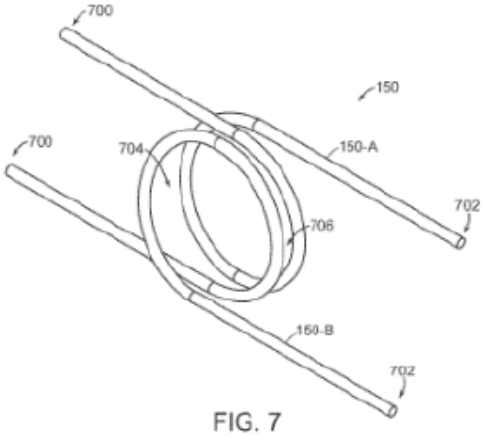

FIG. 7

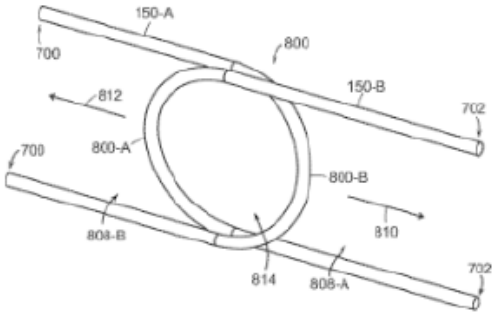

FIG. 8

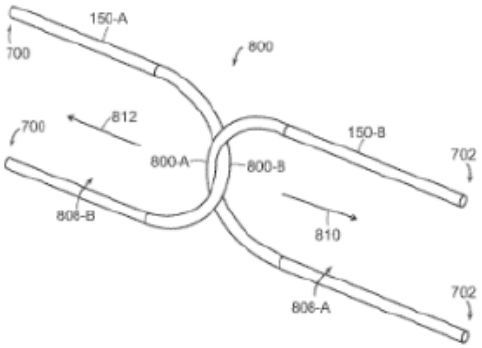

FIG. 9

Ex. 1001, Figs. 6–9. Figures 6–9 above show a variety of filament configurations, including a single loop (Fig. 6), or "the filament 150 can comprise multiple filaments . . . as shown in FIGS. 7 through 9." *Id.* at 13:6–8, 13:29–36 (describing "single loop 604" and "multiple loops" (704, 706) embodiments as depicted in Figs. 6 and 7, respectively). As the patent explains, in embodiments, "a diameter or size of the loop 604, or of the loops 704, 706 can decrease when the constricting mechanism 141 is moved from the second configuration to the first configuration." *Id.* at 13:38–41. Figures 8 and 9 above depict a filament comprising first and second interlocking "bights" 800A, 800B for receiving and extending around respective portions of an elongate member. *Id.* at 13:42–63. According to the patent, bights 800A and 800B define an "encircled area 814" into which the elongate member can be received; movement of bights 800A and 800B

in the directions indicated by arrows 812 and 810 "decreases the size of the encircled area 814 and constricts, collapses, and/or seals the elongate member 132 extending through the encircled area." *Id.* at 13:55–14:17.

D. Illustrative Claims

Petitioner challenges claims 1–9. Claim 1 is the only independent claim. It reads:

> 1. A valve, comprising:
>
> a tubular member defining a lumen configured to slidably receive a catheter;
>
> a constricting mechanism including at least one filament and an actuator coupled to the filament, the filament comprising a first portion extending around at least a portion of the tubular member and a second portion having a first end extending from the first portion in one direction and a second end extending from the first portion in another direction, and the actuator comprises a first member coupled to the first end of the filament and a second member coupled to the second end of the filament, wherein the first member and the second member of the actuator are moveable between (a) a first position wherein the filament circumferentially constricts the lumen to create a seal and (b) a second position wherein the filament is moved to at least partially open the lumen; and
>
> a biasing system configured to bias the first member and the second member to the first position.

Ex. 1001, 22:20–39.

E. Prior Art and Asserted Grounds

Petitioner asserts that claims 1–9 are unpatentable based on the following grounds:

Grounds	Claims Challenged	35 U.S.C. §[2]	Reference(s)/Basis
1	1–9	102	Schaffer[3]
2	1–9	103	Schaffer
3	1–9	103	Schaffer, Hartley[4]
4	1–9	103	Schaffer, Eller[5]
5	1–3, 5, 6, 9	103	Hartley, Eller

Petitioner also relies on testimony from Troy L. Thornton (Ex. 1003) in support of its challenge. In response, Patent Owner relies on testimony from Paul J. Zalesky. Ex. 2001.

[2] The Leahy-Smith America Invents Act ("AIA"), Pub. L. No. 112–29, 125 Stat. 284, 285–88 (2011), revised 35 U.S.C. §§ 102, 103 effective March 16, 2013. Based on the uncontested assertion that September 6, 2017, is the earliest possible priority date for the '011 patent, we apply the AIA versions of §§ 102 and 103 in this Decision. Pet. 12–13.

[3] Schaffer et al., US 2003/0225379 A1, published Dec. 4, 2003 (Ex. 1005 ("Schaffer")).

[4] Hartley, US 2003/0116731 A1, published June 26, 2003 (Ex. 1006 ("Hartley")).

[5] Eller, US 9,980,813 B2, issued May 29, 2018 (Ex. 1007 ("Eller")). Petitioner notes that Eller published October 29, 2015. Pet. 15; *see* Ex. 1007, code (65).

III. ANALYSIS

A. Legal Standards

"In an [*inter partes* review], the petitioner has the burden from the onset to show with particularity why the patent it challenges is unpatentable." *Harmonic Inc. v. Avid Tech., Inc.*, 815 F.3d 1356, 1363 (Fed. Cir. 2016) (citing 35 U.S.C. § 312(a)(3)).

"[T]he dispositive question regarding anticipation [i]s whether one skilled in the art would reasonably understand or infer from the [prior art reference's] teaching that every claim element was disclosed in that single reference." *Dayco Prods., Inc. v. Total Containment, Inc.*, 329 F.3d 1358, 1368 (Fed. Cir. 2003) (quoting *In re Baxter Travenol Labs.*, 952 F.2d 388, 390 (Fed. Cir. 1991)) (emphasis omitted). "Because the hallmark of anticipation is prior invention, the prior art reference—in order to anticipate under 35 U.S.C. § 102—must not only disclose all elements of the claim within the four corners of the document, but must also disclose those elements arranged as in the claim." *Net MoneyIN, Inc. v. VeriSign, Inc.*, 545 F.3d 1359, 1369 (Fed. Cir. 2008) (internal quotation marks omitted).

A claim is unpatentable under 35 U.S.C. § 103 if the differences between the claimed invention and the prior art are such that the claimed invention as a whole would have been obvious at the time the invention was made[6] to a person having ordinary skill in the relevant art. *KSR Int'l Co. v. Teleflex Inc.*, 550 U.S. 398, 406 (2007). The question of obviousness is resolved on the basis of underlying factual determinations including: (1) the

[6] The AIA revised § 103 such that obviousness is assessed "before the effective filing date of the claimed invention," but *KSR* and other obviousness precedents cited herein remain applicable despite this change in the timing of the obviousness inquiry.

scope and content of the prior art; (2) any differences between the claimed subject matter and the prior art; (3) the level of ordinary skill in the art; and (4) secondary considerations (i.e., objective indicia) of nonobviousness when presented.[7] *Graham v. John Deere Co.*, 383 U.S. 1, 17–18 (1966). "An obviousness determination [also] requires finding both that a skilled artisan would have been motivated to combine the teachings of the prior art references to achieve the claimed invention, and that the skilled artisan would have had a reasonable expectation of success in doing so." *CRFD Rsch., Inc. v. Matal*, 876 F.3d 1330, 1340 (Fed. Cir. 2017) (internal quotation marks and citation omitted).

B. Level of Ordinary Skill in the Art

Petitioner proposes that the person of ordinary skill in the art ("POSA") in September 2017 "would have had an undergraduate degree in mechanical engineering or a related engineering discipline and 2–4 years of product design or engineering experience." Pet. 13 (citing Ex. 1003 ¶ 35). Patent Owner provides no alternative definition of the POSA's qualifications at this time and, instead, applies Petitioner's proposed definition in its response. Prelim. Resp. 21–22.

We apply Petitioner's proposed POSA level for this Decision, which level appears to be reasonable and not inconsistent with the cited prior art.

C. Claim Construction

In *inter partes* review, we construe claims using the same claim construction standard used to construe claims in a civil action before the

[7] Petitioner states that it is not aware of any objective indicia of nonobviousness (Pet. 84) and Patent Owner's Preliminary Response does not provide argument about any objective indicia.

courts under 35 U.S.C. § 282(b), including construing claim language in accordance with its ordinary and customary meaning as understood by the POSA, in view of the patent's specification and considering the patent's prosecution history. 37 C.F.R. § 42.100(b). We need only construe terms where the parties dispute the terms' meanings and only to the extent needed to resolve the controversy. *Realtime Data, LLC v. Iancu*, 912 F.3d 1368, 1375 (Fed. Cir. 2019).

1. "filament"

Claim 1 recites in part "a constricting mechanism including at least one ***filament*** and an actuator coupled to the filament." Ex. 1001, 22:23–24 (emphasis added). Petitioner argues that a POSA "would have understood the claim term 'filament' to mean at least 'one or more threads, lines, cords, ropes, ribbons, flat wires, sheets, or tapes.'" Pet. 14 (quoting Ex. 1003 ¶ 52). Patent Owner argues that a POSA would interpret the term "filament" as meaning "a thin, flexible length of material formed by one or more strands of material." Prelim. Resp. 16–21. We address the parties' proposed constructions in more detail below.

a) Petitioner's Proposed Construction

According to Petitioner, the '011 patent "provides examples of 'filaments' that demonstrate the patent is using the term 'filament' more broadly than the plain and ordinary meaning." Pet. 13. Petitioner notes the Specification's disclosure that "[t]he filament can be made from a variety of materials including, for example, a polymer, a synthetic, and/or a metal," that "the filament can comprise a single strand . . . [or] can comprise a plurality of strands that can be, for example, twisted, woven, grouped, and/or fused to form the filament," and that "the filament 150 can comprise one or several threads, lines, cords, rope, ribbon, flat wire, sheet, or tape." *Id.* at 14

(citing Ex. 1001, 9:10–20). From such disclosures, Petitioner argues a "filament" should be construed to mean "one or more threads, lines, cords, ropes, ribbons, flat wires, sheets, or tapes." *Id.*

Patent Owner does not dispute that a "filament" as claimed comprises the structures listed in Petitioner's proposed construction (one or more threads, lines, etc.). Prelim. Resp. 17, 19–20. Instead, Patent Owner argues that Petitioner's construction is incomplete for at least the reason that it "omits the requirement that a filament is flexible." *Id.* at 17. Moreover, Patent Owner contends, Petitioner's construction is not incompatible with a requirement that the filament be "flexible" because each of the listed structures (e.g., "threads, lines, cords") can be a flexible material. *Id.* at 20.

We need not at this time expressly construe the term "filament" in the manner urged by Petitioner. We agree with Petitioner that a filament as claimed *encompasses* one or more threads, lines, cords, ropes, ribbons, flat wires, sheets, or tapes. The '011 patent lists those structures explicitly, but suggests those are only examples and, thus, the term "filament" may be broader than those structures. Ex. 1001, 9:18–20 ("***In some embodiments*,** the filament 150 ***can comprise*** one or several threads, lines cords, rope, ribbon, flat wire, sheet, or tape.") (emphasis added). As noted above, Patent Owner also does not disagree that the claimed "filament" encompasses the listed structures. We need only construe terms to the extent necessary to resolve the controversy. *Realtime Data*, 912 F.3d at 1375.

b) Patent Owner's Proposed Construction

We now turn to Patent Owner's argument that the "filament" must be "thin and flexible." Prelim. Resp. 16. According to Patent Owner, the claims confirm that a filament must be flexible insofar as the claims require a filament that can "circumferentially constrict" the lumen to create a seal.

Id. at 17–18. Patent Owner argues that "a filament, which is flexible, can change shape dynamically, allowing for better adaptability to the surface contours around the circumference of the object as it is constricted" whereas "if the filament were rigid . . . , [a]s the rigid material constricts the lumen, the lumen will deform, leaving gaps between the lumen and the rigid material." *Id.* (citing Ex. 2001 ¶¶ 62–63). So, Patent Owner argues, "[t]o 'circumferentially constrict,' the filament must surround the entire circumference of the lumen and constrict the lumen around that circumference" and, thus, the claims require a flexible filament. *Id.*

Patent Owner argues the Specification is consistent with its proposed interpretation requiring a "flexible" filament. Prelim. Resp. 18–20. Patent Owner cites, for example, the Specification's disclosure about a filament that "forms a loop around the elongated member" and that movement of the tensioning mechanism and filament "*reduces the size of the loop* to thereby constrict the tubular member within the loop." *Id.* at 18 (quoting Ex. 1001, 4:58–62) (Patent Owner's emphasis). According to Patent Owner, "[t]he filament must be flexible in order to 'reduce[] the size of the loop' when tension is applied to constrict the central lumen." *Id.* (citing Ex. 2001 ¶ 64). Patent Owner further argues that the Specification's disclosure that the filament can be made of polymers, synthetics, or metals does not undermine a requirement of flexibility because those materials can be flexible, such as a flexible steel wire or cable. *Id.* at 19 (citing Ex. 2001 ¶ 65).[8]

[8] Patent Owner contends nothing in the file history suggests that the claimed filament need not be flexible. Prelim. Resp. 20 (noting the Examiner's citation to Hartley as disclosing the claimed filament at feature 14, which feature Hartley describes as a "flexible member" (Ex. 1006 ¶ 34)).

Lastly, Patent Owner contends that extrinsic evidence supports its interpretation. Prelim. Resp. 21. Patent Owner cites deposition testimony of Petitioner's declarant, Mr. Thornton, in related ligation that, "in the ordinary meaning of filament, it has flexibility." *Id.* (citing, e.g., Ex. 2005, 123:1–15). And, Patent Owner cites a dictionary that "defines a filament as 'a single thread or a thin flexible threadlike object, process, or appendage.'" *Id.* (citing, e.g., Ex. 2002, 467).

We are not, at this stage, persuaded that we should construe the term "filament" to require that it must be both "thin" and "flexible" as proposed by Patent Owner. Construction of this term may benefit from further briefing during trial and after giving Petitioner the opportunity to respond directly to Patent Owner's proposed interpretation (if preserved by argument made in the Patent Owner Response). We include some preliminary observations about the term "filament" below, which the parties may also consider addressing in subsequent briefing.

As an initial matter, it appears that the '011 patent never uses the words "thin" or "flexible" to describe the "filament." The only times that "thin" and "flexible" are used relate to descriptions of the elongate tubular member or catheter. *See, e.g.*, Ex. 1001, 6:3–4 (disclosing that "[t]he tubular member is a flexible member that defines a central lumen"), 7:11–15 (disclosing, for example, a "thin-walled compliant tubular structure"). Absent more direct textual support, we are somewhat reluctant at this preliminary stage to limit the claimed filament to only "thin" and "flexible" structures. Moreover, the words "thin" and "flexible" inject potential ambiguities as relative terms. For example, because flexibility and rigidity exist along a spectrum, how "flexible" would a metal wire or cable need to be to qualify as a "filament" as claimed?

We recognize that filaments having at least some degree of flexibility are encompassed by the claims. Consider, for example, an embodiment where the filament is a single synthetic thread that loops around the elongate member, such as contemplated by the Specification and Figure 6 below.

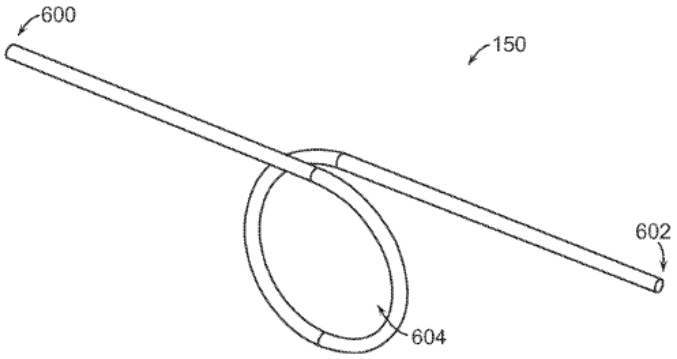

FIG. 6

Ex. 1001, Fig. 6, 9:4–20. Figure 6 above shows filament 150 forming single loop 604, with a first end 600 and second end 602 that may be connected to different buttons of the actuator. *Id.* at 12:56–13:5, 13:29–33. If the filament of Figure 6 were completely inflexible, it could not work as intended. That is, applying a force that seeks to pull the respective ends 600 and 602 of such filament in opposing directions would not decrease the "diameter or size of the loop 604"—the loop would stay the same size and an elongate member extending through that loop would not be constricted and sealed. *Id.* at 13:38–41. Thus, in the above embodiment, a flexible filament is required (i.e., a filament that is sufficiently flexible that it can decrease the size/diameter of the loop to constrict and seal the valve).

The Specification's disclosure is not, however, limited to the embodiment discussed above. To the contrary, also disclosed are embodiments where, for example, the filament includes multiple and interlocking U-shaped "bights" as seen in Figures 8 and 9 below.

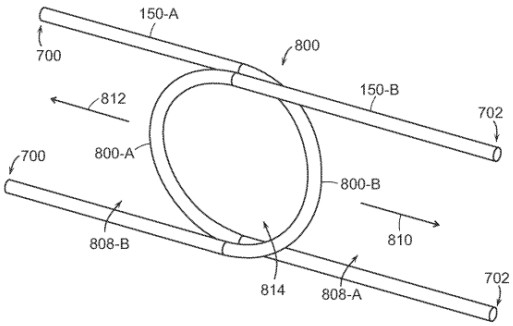

FIG. 8

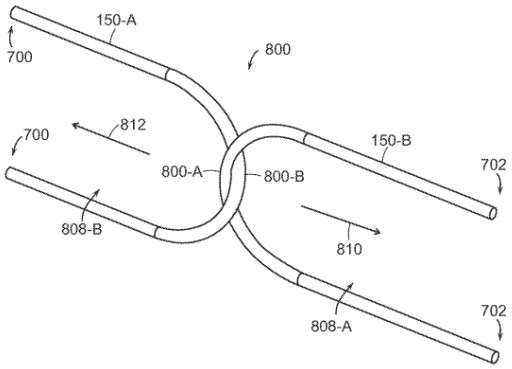

FIG. 9

Ex. 1001, Figs. 8–9. In Figure 8 above, the two interlocking bights 800A and 800B form "encircled area 814" into which an elongate member can be received. *Id.* at 13:42–14:17. As shown in Figure 9, movement of the bights in opposing directions (810 and 812) "decreases the size of the encircled area 814 and constricts, collapses, and/or seals the elongate member 132 [(not shown)] extending through encircled area 814." *Id.* It is not evident at this preliminary stage that this embodiment using "bights" requires that the filament be "flexible" in the manner urged by Patent Owner. And further to this point, the Specification discloses that the filament can be made of metal, can comprise any desired cross-sectional shape such as circular, rectangular, or square, and can have a diameter or thickness of between 0.01 to 2.5 mm. *See, e.g.*, Ex. 1001, 9:10–12, 14:18–46. Whether, for instance, 2.5 mm thick metal wire or cord could be used (such as in the "bight" embodiment above) and would be encompassed by the claimed "filament" even without requiring that it be "flexible" is an open question.

Regarding Patent Owner's argument that a rigid material cannot "circumferentially constrict" the lumen, this too may benefit from further analysis from the parties. Patent Owner and its declarant Dr. Zalesky seemingly interpret "circumferentially constrict" to require a flexible filament that dynamically conforms to the lumen's surface contours without

forming any surface gaps upon constriction whereas "a rigid member would maintain the same contact area with the lumen at all times as it is pulled against the tube." *See* Prelim. Resp. 17–18 ("a rigid material would only constrict where the rigid material contacts the lumen" and "[a]s the rigid material constricts the lumen, the lumen will deform, leaving gaps between the lumen and the rigid material"); Ex. 2001 ¶¶ 62–63 ("A filament, which is flexible, can change shape dynamically, allowing for better adaptability to the surface contours of the object as it is constricted."). Wanting for further explanation, however, is why two bights like shown in Figures 8–9 that cooperatively receive an elongate member in "encircled area 816" cannot "circumferentially constrict" the elongate member and lumen when pulled in opposite directions (810–812) even if those bights were substantially rigid.[9]

For the above reasons, we decline at this time to construe the claimed "filament" in the manner proposed by Patent Owner. Although we agree that a filament as claimed may include one or more "flexible" strands, threads, cords, etc., we are not yet persuaded that the term is limited as such. We will revisit if needed on a more-developed record.

---

[9] According to Patent Owner, Petitioner "implicitly concedes" that rigid materials will form gaps and cannot circumferentially constrict the lumen. Prelim. Resp. 18 (citing Pet. 36). To the extent Petitioner is pointing to the formation of potential "gaps" in the operation of Schaffer's unmodified valve, Petitioner identifies gaps between the lumen's internal wall and the exterior of a hypothetical tool inserted through the lumen. *See, e.g.*, Pet. 35–36. It is not apparent that Petitioner is identifying gaps between Schaffer's U-shaped actuating members and the lumen's external surface in the manner suggested by Patent Owner's interpretation. *Id.*

2. Filament end(s) and coupling to actuator member(s)

Claim 1 recites in part the following:

> the filament comprising a first portion extending around at least a portion of the tubular member and a second portion having a *first end extending from the first portion in one direction* and a *second end extending from the first portion in another direction*, and the actuator comprises a *first member coupled to the first end of the filament and a second member coupled to the second end of the filament*;

Ex. 1001, 22:24–32 (emphasis added). Stated more succinctly, and relevant to the issues in dispute, the filament comprises a "first end" and "second end" that extend in different directions where the first end and second end are coupled, respectively, to first and second members of the actuator. The parties dispute the meaning and application of the above claim language, yet neither party addresses that meaning in the sections of their briefing devoted to claim interpretation.

According to Petitioner, two oppositely disposed but otherwise identical "U-shaped" members (e.g., as shown in Schaffer's Figures 31–34) can *collectively* qualify as a filament and meet the above-quoted claim language. *See, e.g.*, Pet. 28–31 (arguing Schaffer's use of "two separate actuating members is of no moment" because such "actuating members ***collectively constitute*** the 'at least one filament' disclosed and claimed in the '011 patent" with ends of one U-shaped member meeting the claimed "first end" coupled to an actuator's "first member" (i.e., a first button) and the second U-shaped member's ends coupled to a second button meeting the claimed "second end" and "second member" limitations); *see infra* Section III.D.1 (showing Schaffer Fig. 34).

Conversely, Patent Owner argues that this claim language requires "at least one single continuous" and unbroken thread, strand, etc. that has a first

end coupled to a first member of the actuator and a second end coupled to a second member of the actuator. Prelim. Resp. 10–14 (arguing the claims do not, however, exclude "multiple single continuous filaments" like shown in the '011 patent's Fig. 7); *see also id.* at 24–26 (arguing, *inter alia*, that in Schaffer, "[b]oth ends of each U-shaped actuating member extend in the same direction, not different directions" and "are coupled to the same button"). Put differently, it seems Patent Owner urges an interpretation that excludes, for example, a "filament" comprising multiple sub-structures of cooperating or interlocking (but non-continuous) design, such as allegedly disclosed by the U-shaped members of Schaffer or the U-shaped "bights" like described in the '011 patent. *Id.*; Pet. 28–31 (citing Ex. 1001, Fig. 8).[10]

We decline at this stage to limit this claim language in the manner suggested by Patent Owner. As pointed out by Petitioner, the '011 patent discloses that "the filament 150 can comprise multiple filaments . . . as shown in FIGS. 7 through 9," which are described as comprising first and second filaments 150-A and 150-B. Ex. 1001, 13:6–9; Pet. 11–12, 28. In Figures 8 and 9, sub-filaments 150-A and 150-B form U-shaped "bights" that cooperate to encircle an elongate member as already discussed above. To be sure, the patent discloses that, "[i]n embodiments in which the filament 150 comprises multiple filaments, each of the multiple filaments can have a first end 700 and a second end 702." Ex. 1001, 13:9–12. With respect to the "bight" embodiment shown in Figures 8 and 9, however, the patent labels both respective ends of filament 150-A as feature 700—i.e.,

[10] As discussed below, we recognize that Patent Owner additionally argues that Schaffer's U-shaped members are not "filaments" in any case because those members are allegedly rigid and inflexible. Prelim. Resp. 22–24.

"first end 700." *Id.* at Figs. 8–9. And, the patent labels both ends of the oppositely disposed filament 150-B (forming the opposite bight) as feature 702—i.e., "second end 702." *Id.* This contrasts with the labeling and description of the alternative embodiments shown in Figures 6 and 7 where, whether one or multiple filaments are included, each discrete filament is shown as including an end disposed in one direction (labeled first end 600 or 700) and another end disposed in the opposite direction (labeled second end 602 or 702). *Id.* at Figs. 6–7. The cited descriptions about Figures 8 and 9 lend some support to Petitioner's interpretation of this claim language.

Patent Owner, recognizing the '011 patent's description related to Figures 8 and 9, argues that such description is an "obvious typographical error" and suggests the Board is empowered to correct it. Prelim. Resp. 12–14 (citing Ex. 2001 ¶¶ 45–47). That argument is unavailing because we are, at present, unpersuaded that the patent's description of those figures is wrong. Moreover, the Board's authority in an IPR proceeding to "correct" errors in a patent (usually involving minor claim corrections) is only appropriate if the "correction is not subject to reasonable debate based on consideration of the claim language and the specification." *Novo Indus., LP v. Micro Molds Corp.*, 350 F.3d 1348, 1354 (Fed. Cir. 2003); *see also Fitbit, Inc. v. Valencell, Inc.*, 964 F.3d 1112, 1119 (Fed. Cir. 2020) (suggesting the standard from *Novo* extends to corrections the Board may make in post-grant proceedings, and holding it was error to not correct a "conspicuous" and undisputed claim error related to antecedent basis); *Beable Educ., Inc. v. Acheive3000, Inc.*, IPR2021-01169, Paper 34 at 9–11 (PTAB Jan. 3, 2023) (correcting claim language based on two *undisputed* "typographical errors" that were clear from the prosecution history). It is not established at this

stage that Petitioner's interpretation of Figures 8 and 9 is clearly erroneous or subject to a correction that is beyond reasonable debate.

For the reasons above, we apply the broader interpretation of this claim limitation as suggested by Petitioner's argument and mapping of the prior art and claims (discussed in more detail below). We will revisit as necessary on a more-complete record.[11]

D. Asserted References

Petitioner asserts, and Patent Owner does not dispute, that Schaffer, Hartley, and Eller are each prior art under 35 U.S.C. § 102(a)(1). Pet. 15.

1. Schaffer (Ex. 1005)

Schaffer is a U.S. patent application that published December 4, 2003. Ex. 1005, code (43). Schaffer is titled "Composite Stasis Valve" and describes a "valve for blocking the flow of gas or fluid with or without an instrument in place within the gas/fluid path." *Id.* at Abstr.; *see also id.* ¶¶ 2–3 (disclosing that Schaffer "relates to catheters, in particular to composite fluid-stasis valves for use with catheters" and "[f]luid stasis mechanisms are commonly used to prevent loss of fluids from the insertion site of a catheter").

An embodiment of Schaffer's fluid-stasis valve, including Petitioner's uncontested annotations, is shown below.

[11] The disputes about claim interpretation discussed above are potentially dispositive only for Grounds 1 and 2 (anticipation and obviousness over Schaffer alone) because there is no argument on this record that all of the claim limitations, even applying Patent Owner's claim interpretations, are taught or suggested in the proposed combination of Schaffer with either Hartley or Eller. Prelim. Resp. 37–44.

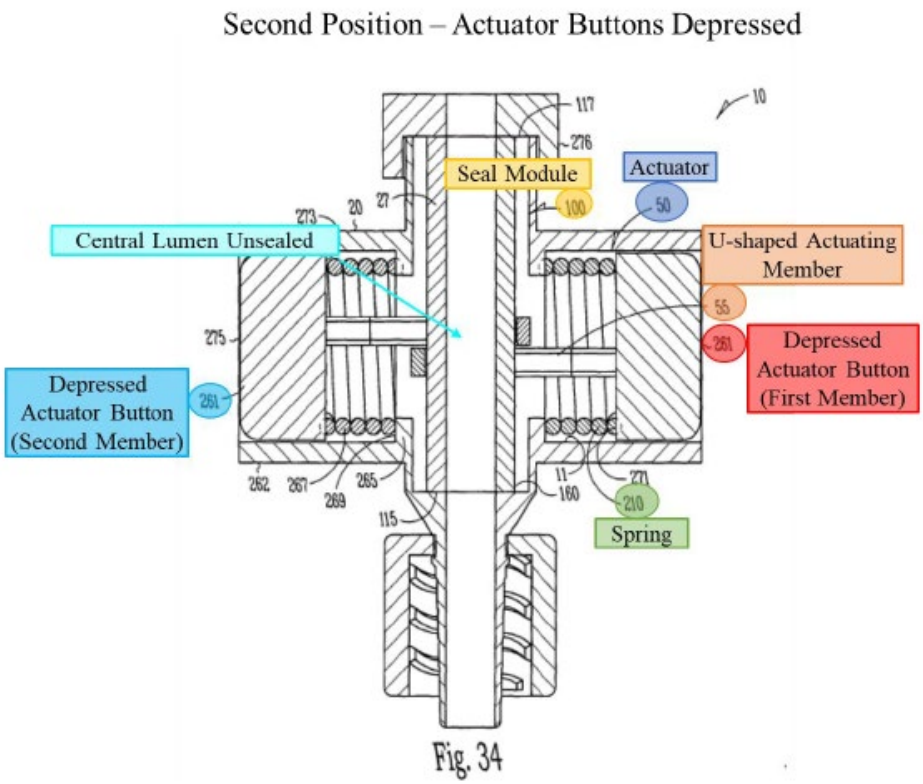

Pet. 25 (Ex. 1008, Fig. 34[12] (annotated)); Ex. 1005, Fig. 34, ¶ 75 ("FIGS. 30–34 illustrate one embodiment of the stasis valve 10 including a seal module 100 having a lumen sized to allow the passage of fluids or gases."); Ex. 1008, 16–19 (Figs. 30–34). Schaffer's Figure 34, above, is a cross-sectional view of a stasis valve 10, where actuator buttons 261 (red and blue highlights) are depressed, causing seal module 100 (yellow highlight) to take on an "uncollapsed configuration" such that a central lumen (teal highlight) is unsealed. Ex. 1005, Fig. 34, ¶¶ 75–77; Ex. 1008, 19. Schaffer discloses that actuator 50 (dark blue highlight) "include[s] an actuating member 55 which, in one option, is U-shaped" (orange highlight). Ex. 1005 ¶ 76; *see also* Ex. 1008, 18 (perspective view of valve 10, showing U-shaped actuating members 55). Schaffer teaches that the actuating members may

[12] Petitioner cites drawings from Schaffer submitted during prosecution of that application due to those drawings' improved clarity. Ex. 1008.

comprise aluminum or plastic. Ex. 1005 ¶¶ 81, 82 (actuating members and buttons may, for example, be machined from aluminum).

Although not shown in Figure 34 reproduced above, when the actuator buttons of Schaffer's illustrative embodiment are released, the stasis valve is in a closed or sealed configuration. Ex. 1005 ¶ 77, Fig. 32 (showing the valve in a closed configuration where a central portion of containment structure 160 is collapsed by U-shaped actuating members moving in opposing directions under the force of springs 210). Schaffer discloses that, in the first/closed position, the actuating members 55 "are, in one option, disposed at least partially circumferencially [sic] disposed about" the seal module "depressing and at least partially collapsing a portion 108 of the containment structure 160 by a compressive force 67 (e.g., by a spring 210)." *Id.* ¶ 77 ("The lumen 193 of the third seal member 165 is at least partially collapsed by the compressive force 67").

2. Hartley (Ex. 1006)

Hartley is a U.S. patent application that published June 26, 2003. Ex. 1006, code (43). Hartley is titled "Access Valve" and, in general, relates to an access valve for laparoscopic or intralumenal deployment devices. *Id.* at Abstr., code (54); *see also id.* ¶ 3 ("The invention will be discussed in . . . relation to fluid flow prevention and access valves in medical applications for instance where it is desired to seal around a catheter or other instrument . . . to prevent loss of blood or other fluid.").

Hartley's Figure 5 is reproduced below.

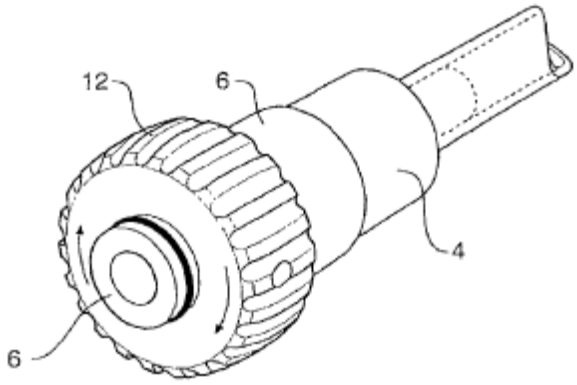

Fig 5

Ex. 1006, Fig. 5. Figure 5 above is a perspective view of an illustrative delivery catheter and constriction valve described in Hartley. *Id.* ¶ 29. The valve includes, *inter alia*, catheter body 4, cylindrical housing 6, and rotary actuator 12. *Id.* ¶ 31.

The action of Hartley's valve is more clearly seen in Figures 3 and 4, reproduced side-by-side below.

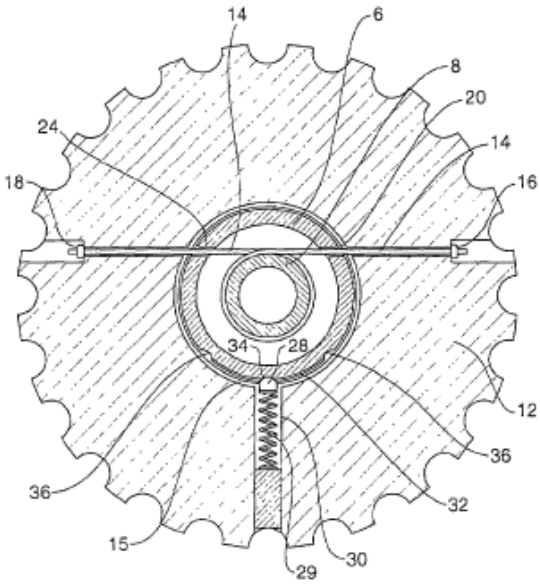

Fig 3

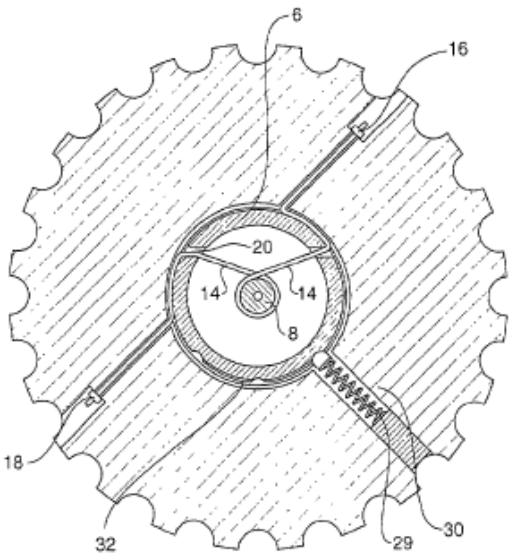

Fig 4

Ex. 1006, Figs. 3–4. Figures 3 and 4 of Hartley are top, cross-sectional views of a constriction valve, showing, respectively, the valve in an open and closed configuration. *Id.* ¶¶ 27–28, 31–34. In the open configuration (above left), rotary actuator 12 is mounted to cylindrical housing 6, and a string 14 mounted to portions of rotary actuator with knots 16, 18. *Id.* ¶ 31. String 14 (or another suitable flexible member) is wound around a cylindrical elastomeric diaphragm 8. *Id.*; *see also id.* ¶¶ 16–17 ("The flexible member may be a string, suture or band or other suitable material").

Hartley teaches that "[r]otation of the rotary actuator 12 with respect to the cylindrical housing 6 will cause the string 14 to be pulled in both directions at once and hence the cylindrical diaphragm 8 to be constricted" and sealed as shown in Figure 4 (above right). *Id.* ¶¶ 31, 34. According to Hartley, its invention provides "an access or constriction valve arrangement which will close over a range of diameters of devices passed through the valve or can close completely down to be self[-]sealing." *Id.* ¶ 37.

3. Eller (Ex. 1007)

Eller is a U.S. patent that issued May 29, 2018, and indicates a prior publication date of October 29, 2015. Ex. 1007, codes (45), (65). Eller relates, in general, to "[s]elective fluid barrier valve devices" and methods of treatment using such devices. *Id.* at Abstr.

Eller discloses that "[a]n embodiment of a selective fluid barrier device comprises a housing, an actuator, a sleeve, a wire member, and a connector." *Id.* "The sleeve defines a passageway that extends through the [valve]" and [t]he actuator is movable between a first position and a second position" where the first position allows fluid to pass through the sleeve and, in the second position, fluid is prevented from passing through the sleeve. *Id.*

An embodiment of Eller's selective fluid barrier valve device is shown in Figure 15 below.

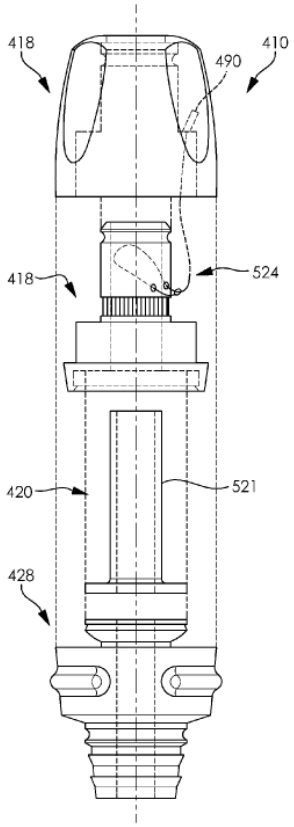

FIG. 15

Ex. 1007, Fig. 15; *see also id.* Figs. 1–2 (perspective and exploded views of similar valve device). Figure 15, reproduced above, is an exploded view of an illustrative selective fluid barrier valve of Eller. The valve device 410 includes, among other features, actuator 418, sleeve 420, and a wire member 422 (not labeled) with a first end 524 attached to actuator 418 within cavity 490. *Id.* at 21:37–22:10 ("wire member can be positioned such that it extends at least one full revolution around the outer surface of the sleeve"); *see also id.* at Figs. 16–17 (showing wire 422 looped around sleeve 420 within housing 416). As disclosed in Eller, movement (e.g., rotation) of the actuator from its first position to its second position pulls the wire member to constrict and close sleeve 420. *See, e.g.*, *id.* at 22:25–31, 1:55–2:6

(disclosing that, in the second configuration, "the sleeve passageway is closed and prevents fluid from passing"). Eller further teaches that the valve device can "be biased to the second [(closed)] configuration" by, for example, using a spring. *Id.* at 19:22–30.

Eller teaches that its disclosure can be applied to many types of actuators and is not limited to rotary actuators. *Id.* at 8:27–44. According to Eller, "while a rotatable member 29 has been illustrated, a selective fluid barrier valve device can include any suitable actuator capable of moving . . . between a first configuration and a second configuration. Skilled artisans will be able to select a suitable actuator" and "[e]xample actuators . . . include rotatable actuators, linear actuators, slidable actuators . . . and any other actuator considered suitable for a particular embodiment." *Id.*

Eller discloses that a "wire member . . . can have any suitable structure and comprise any suitable number of strands and/or fibers that are twisted, or otherwise interconnected to one another." *Id.* at 15:61–16:6 (teaching "wire member can comprise a suture or a cable"). Eller further discloses that "[a]ttachment between a wire member and a housing and/or an actuator can be accomplished using any suitable method or technique" including, for example, "adhesives, welding, [or] fusing." *Id.* at 14:37–53.

E. Ground 1: Anticipation by Schaffer

Petitioner contends that claims 1–9 are anticipated by Schaffer. Pet. 16–32 (claim 1, preamble, tubular member, and constricting mechanism limitations), 49–50 (biasing system), 51–70 (dependent claims); Ex. 1003 ¶¶ 54, 57–59, 62–74, 101–103 (Thornton analysis for claim 1's limitations). We address in more detail below Petitioner's challenge to claim 1, which is the focus of Patent Owner's counterargument at this stage.

According to Petitioner, Schaffer discloses a hemostasis valve with the "same components, in the same arrangement, as the valve claimed in the '011 patent." Pet. 16–17. Petitioner provides a side-by-side comparison of illustrative valves of the '011 patent and Schaffer as shown below.

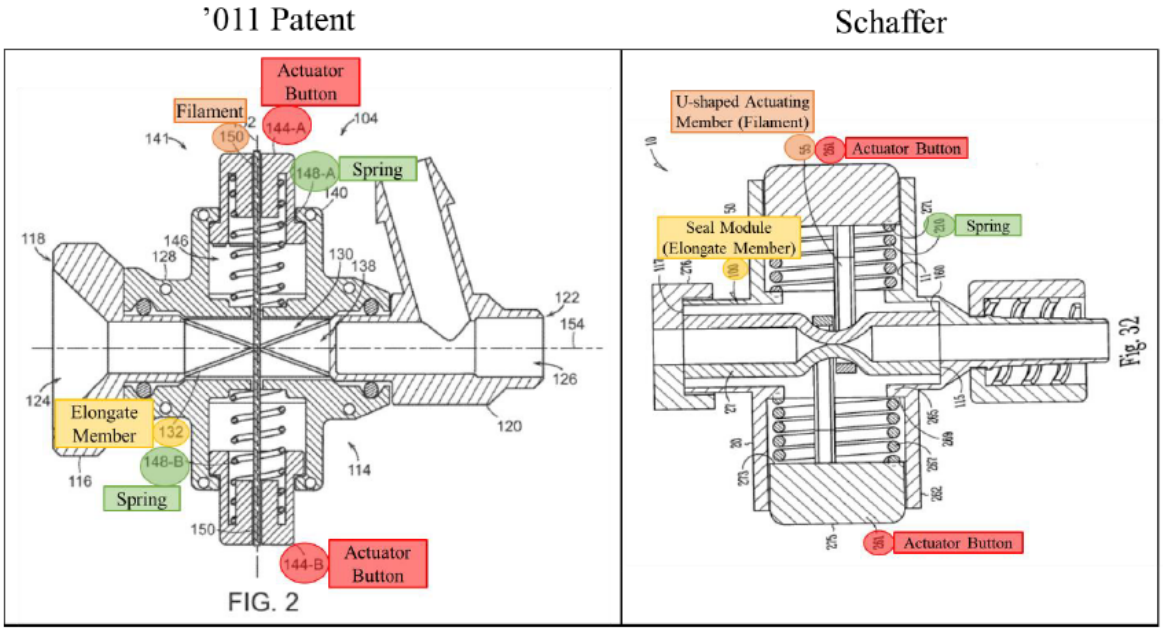

Id. (Petitioner's annotated versions of Fig. 2 of the '011 patent and Schaffer's Fig. 32). The image above includes cross-sectional views of two valves—the valve of Figure 2 of the '011 patent (above left) compared to the valve in Schaffer's Figure 32 (above right), with Petitioner's highlighting of the alleged elongate/tubular member (yellow), filament (orange), actuator buttons (red), and springs (green) in the respective valves.

Petitioner argues that Schaffer's valve as shown in Figure 32 above meets claim 1's preamble (if limiting) and "tubular member" limitations. Pet. 19–21 (citing Ex. 1005 ¶¶ 2, 46, 49, 51, 54–55, 75, Figs. 12, 32, 34; Ex. 1003 ¶¶ 58–63). Petitioner also argues that Schaffer discloses a "biasing system" as recited in claim 1, citing Schaffer's resilient members/springs that bias the respective actuator buttons toward a first (i.e., closed) position

and, thus, seal fluid flow through the valve. *Id.* at 49–50 (citing Ex. 1005 ¶¶ 76–77, Fig. 31, Fig. 32 (annotated); Ex. 1003 ¶¶ 101–103). Patent Owner does not, at this stage, dispute that Schaffer discloses the preamble,[13] tubular member, or biasing system limitations of claim 1.

Petitioner also contends that Schaffer's valve meets claim 1's "constricting mechanism." Pet. 21–32 (addressing the constricting mechanism limitations, including the recitation of "at least one filament," and actuator members coupled to ends of the alleged filament). According to Petitioner, the claimed "filament" is met by Schaffer's two U-shaped actuating members, which "collectively" form a filament with first and second ends that are coupled to opposing actuator buttons (alleged first and second actuator members). *Id.*

Petitioner's annotations to Schaffer's Figures 31 and 32, reproduced below, better illustrate Petitioner's position related to the claimed filament, its first and second ends, and coupling of the ends to the actuator buttons.

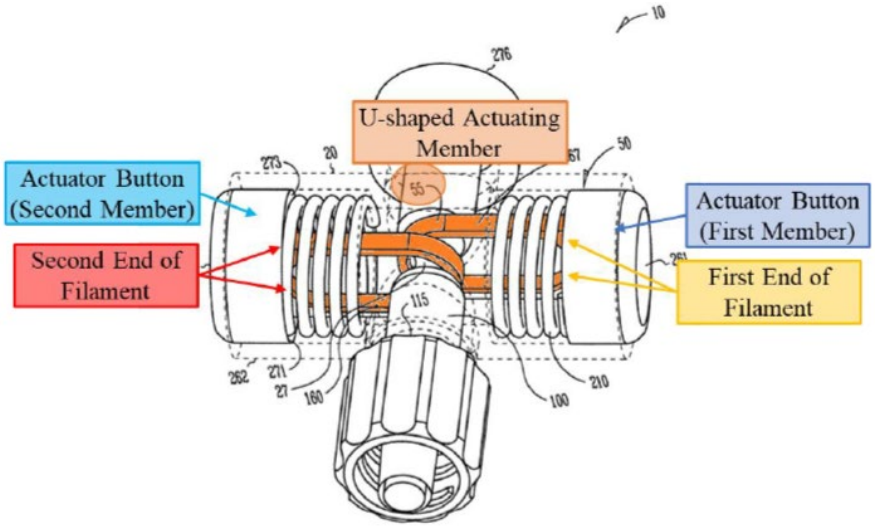

Fig. 31

[13] Because there is no dispute that Schaffer discloses the preamble language, we need not decide whether that preamble limits the claim.

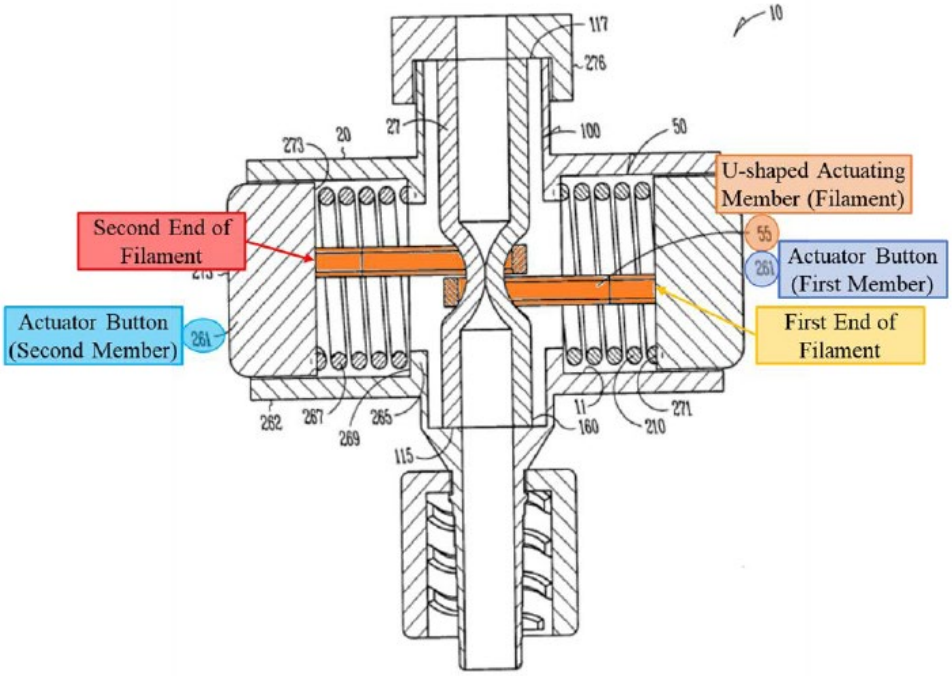

Fig. 32

Pet. 30–32 (citing, e.g., Ex. 1005, Figs. 31–32, ¶¶ 76–77). Figure 31 above is a perspective view of a valve described in Schaffer in a closed/sealed configuration, and Figure 32 is a cross-sectional view of that same valve. Ex. 1005 ¶ 41. Petitioner highlights in orange the two U-shaped actuating members 55, which are alleged to meet the claimed "filament" having a first end (yellow) coupled to a first actuator member/button (dark blue), and a second end (red) coupled to a second actuator member/button (light blue). Ex. 1003 ¶¶ 71–74. According to Petitioner, Schaffer's U-shaped actuating members can be formed of aluminum or plastic and resemble a ribbon, flat wire, sheet, or tape (i.e., structures listed in the '011 patent), which extend at least partially circumferentially around the tubular member (i.e., outer wall of seal module 27). Pet. 27 (Ex. 1005 ¶¶ 76, 81; Ex. 1003 ¶¶ 71, 73).

Patent Owner responds that Schaffer does not anticipate claim 1 because Schaffer "fails to disclose at least . . . three limitations." Prelim. Resp. 22–26. Patent Owner contends that "Schaffer's U-shaped actuating

members are rigid, not flexible" and, thus, are not a "filament" as claimed. *Id.* at 22–24 (citing disclosure in Schaffer (Ex. 1005 ¶¶ 77, 82–83) alleged to show that the U-shaped members are rigid; Ex. 2001 ¶¶ 70–78). In addition, because Schaffer's "rigid actuating members are U-shaped," Patent Owner argues that Schaffer does not disclose a "single continuous filament" with one filament end coupled to a first actuator member (i.e., first button) and a second filament end extending in a different direction that is coupled to a second actuator member (i.e., second button). *Id.* at 24–26 (arguing the ends of one U-shaped member are coupled to one button and the ends of the other U-shaped member are coupled to the opposite button).

Patent Owner's anticipation counterarguments are premised on claim constructions that we do not adopt at this time. On the present record, we decline to limit a "filament" to only "flexible" structures. *See supra* Section III.C.1. Thus, even assuming Patent Owner's characterization of Schaffer's U-shaped actuating members as being "rigid" is correct, that does not necessarily foreclose Petitioner's anticipation challenge. Patent Owner's argument that Schaffer's U-shaped actuating members cannot meet the limitations concerning first/second filament ends coupled to first/second actuator members is similarly unavailing at present. As explained above, we are unpersuaded that Schaffer's two oppositely-oriented U-shaped members (allegedly comparable to the two oppositely-disposed "bights" described in the '011 patent) fall outside the scope of the relevant claim language. *See supra* Section III.C.2 (discussing parties' apparent disputed interpretations related to the filament's first and second ends and coupling of said ends to respective first and second actuator members).

Because we do not adopt Patent Owner's claim interpretations at this stage, we find that Petitioner has shown sufficient evidence to support

institution based on Schaffer's cited valve including a "constricting mechanism" (e.g., filament, etc.) within claim 1's scope. Patent Owner does not dispute that Schaffer discloses claim 1's remaining limitations. Accordingly, based on the preliminary record, we determine that Petitioner has established a reasonable likelihood that it will prevail in showing that at least claim 1 is anticipated by Schaffer. A final determination on Ground 1 will be made, if necessary, on a full record developed through trial.

F. Grounds 2–4: Obviousness over Schaffer; Schaffer and Hartley; Schaffer and Eller

Petitioner argues that claims 1–9 would have been obvious over Schaffer (Ground 2), or over the combinations of Schaffer with Hartley (Ground 3), or Schaffer with Eller (Ground 4). Pet. 32–33 (modifications to Schaffer alone), 33–40 (modification of Schaffer in view of Hartley), 40–49 (modification of Schaffer in view of Eller), 51–70 (dependent claims).

Each of Grounds 2–4 relies on modifying the U-shaped actuating members of Schaffer with another alleged "filament" structure. For example, for Ground 2 Petitioner argues that a POSA "would have found it obvious to modify the U-shaped actuating members [of Schaffer] to closely conform to the seal module . . . to form a better seal and avoid potential gaps" between the lumen and inserted tools. *Id.* at 32–33 (arguing the POSA "could have selected a thin, flexible sheet or flat ribbon of aluminum or plastic to form the actuating members"), 35–36 (depicting alleged gaps).

For Ground 3, Petitioner contends that a skilled artisan "would have found it obvious to substitute Hartley's string for Schaffer's U-shaped actuating members," arguing, *inter alia*, that such modification "merely entail[s] substitution of one known element (Hartley's string) for another (Schaffer's U-shaped actuating members) to yield the predictable results of

constricting the central lumen of Schaffer's valve to form a seal." *Id.* at 34–36 (arguing a POSA would have recognized Hartley's "flexible string . . . encircles the central lumen and precisely conforms to the diameter" of "inserted devices (e.g., other catheters or tools)" and, thus, may seal more effectively across a wider range of diameters for such inserted devices compared to Schaffer's U-shaped members and, thus, better avoid formation of small gaps between the valve's lumen and the outer surface of the devices); Ex. 1003 ¶¶ 80–81; Ex. 1006 ¶¶ 31, 37, Figs. 1–4.

The image below illustrates Petitioner's proposed combination of Schaffer and Hartley.

Demonstrative Illustration
Schaffer + Hartley's String

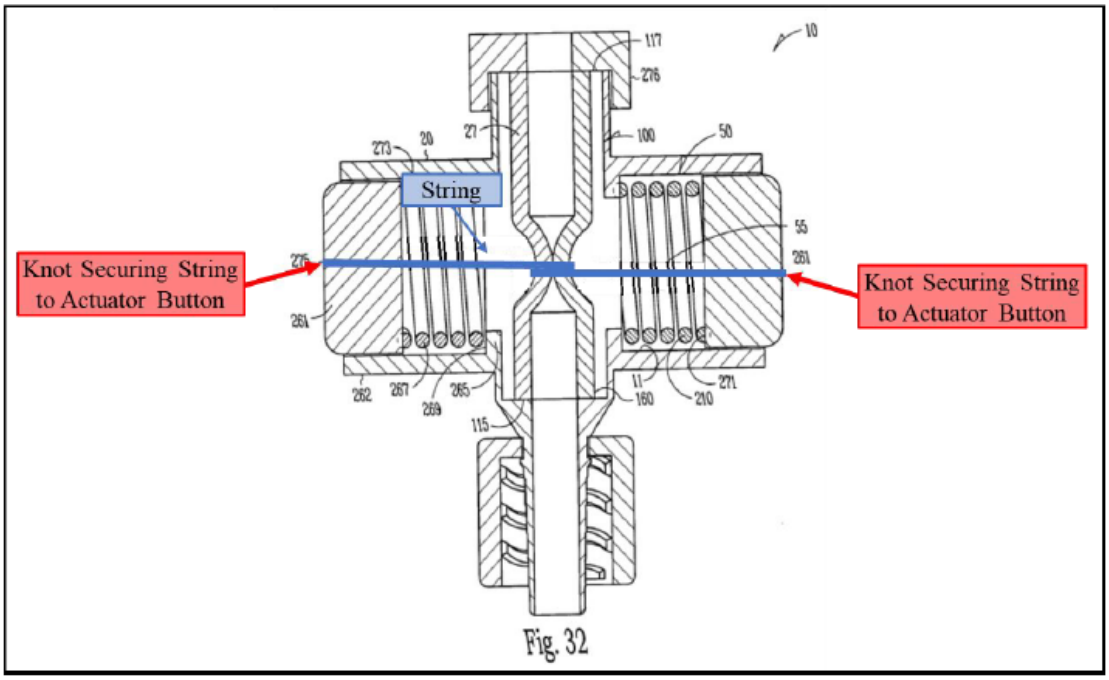

Pet. 37–38. The above image is a demonstrative that shows Schaffer's valve (from Schaffer's Figure 32) modified to substitute the two U-shaped actuating members for Hartley's continuous string (blue highlight), which loops around outer wall of seal member 27 and, Petitioner contends, may be

easily secured at the string's ends (e.g., by knots) to the respective actuator buttons (red highlights). *Id.* (citing Ex. 1003 ¶¶ 84–88). Petitioner contends the skilled artisan would have reasonably expected success in this modification because, for example, Hartley's string would function in a similar way to Schaffer's U-shaped actuating member—constricting and collapsing the central lumen due to a biasing force applied by the opposing springs and actuator buttons. *Id.* at 38–40 (citing, e.g., Ex. 1005 ¶ 77; Ex. 1006 ¶ 31; Ex. 1003 ¶ 85).

Petitioner's proposed combination of Schaffer and Eller is similar, but uses Eller's "wire member" as the "filament" in essentially the same way as Hartley's string is used and depicted above in a modified Schaffer valve. Pet. 40–49. The alleged reasons for making the wire member substitution and reasonable expectation of success echo the Schaffer-Hartley combination discussed above. *Id.* at 44–49 (citing, e.g., Ex. 1007, 8:27–39, 14:37–49, 15:21–40, 17:47–18:3; Ex. 1003 ¶¶ 93–100). Further, Petitioner contends, Eller teaches that any suitable wire-attachment technique (e.g., welding, friction fit, adhesives) can be used, as can any suitable actuator including rotatable actuators or linear actuators like Schaffer. *Id.*

Because of the overlap in Petitioner's arguments for Grounds 2–4, as well as the substantial overlap in Patent Owner's rebuttal arguments to those grounds, our analysis below focuses on Ground 3 and claim 1 as illustrative.

Petitioner provides evidence-backed argument, sufficient at this stage, to explain where each of claim 1's limitations is taught or suggested in the combination of Schaffer and Hartley. *See supra* Section III.E. (discussing Schaffer's undisputed disclosure of claim 1's preamble, tubular member, and biasing system). Pet. 19–21, 49–50; Ex. 1003 ¶¶ 58–63, 101–103; *see also* Pet. 21–26 (addressing Schaffer's actuator and actuator buttons as meeting

claim 1's "actuator" and "first member" and "second member" limitations), 33–35 (addressing Hartley's flexible string as the claimed "filament"); Ex. 1006 ¶¶ 5, 17 ("flexible member may be a string, suture or band or other suitable material"), 31, Figs. 1–4; Ex. 1003 ¶¶ 76–88.

Patent Owner provides no argument that any limitation is missing in the combination of Schaffer and Hartley. Instead, Patent Owner argues that a skilled artisan would not have been motivated to combine Schaffer and Hartley with a reasonable expectation of success. Prelim. Resp. 37–41 (cross-referencing argument at pp. 26–37 (arguing against modification of Schaffer's actuating members)). Patent Owner's counterargument is unavailing on the present record for reasons discussed below.

Petitioner advances multiple reasons why the skilled artisan would have been motivated to combine Schaffer and Hartley with a reasonable expectation of success. Pet. 35–40. For example, according to Petitioner, a POSA would have regarded a substitution of Schaffer's U-shaped members for Hartley's string as little more than a substitution of known hemostasis-valve features with known (and similar) functions to yield a predictable result. Pet. 35–36. Petitioner's position is supported by Mr. Thornton's testimony (unrebutted at present) that, in the field of fluid stasis valves, "[t]here were a finite number of ways to compress the resilient material in a stasis valve to create a seal in September 2017" and "Hartley and Schaffer disclose two such methods" that operate in similar and predictable ways to constrict the central lumen to form a seal. Ex. 1003 ¶¶ 82–83. We agree at this time that the proposed technique for coupling Hartley's string to Schaffer's actuator buttons would have been a "simple modification" within the ordinary capabilities of the skilled artisan. *Id.* ¶ 84 (noting a "simple" knotting attachment); *see also* Ex. 1007, 14:37–54 (suggesting skilled

artisans are able to select "any suitable method or technique" for attaching a flexible wire to an actuator or housing of a fluid stasis valve). We also agree with Petitioner at this time that the POSA would have considered a more flexible filament (e.g., Hartley's string or Eller's wire) as providing expected benefits insofar as such a filament may more precisely and uniformly constrict the lumen against inserted tools of different sizes and shapes. Ex. 1006 ¶ 37 (Hartley's string can "close over a range of diameters of devices passed through the valve or can close completely down and be self sealing"); Ex. 1003 ¶¶ 80–81.

Patent Owner argues that Petitioner's proffered motivation for combining Schaffer and Hartley is flawed because Schaffer's U-shaped actuating members do not create gaps. Prelim. Resp. 37–38 (citing Ex. 2001 ¶¶ 89–100). According to Patent Owner, Schaffer's valve is able to create a nearly fluid-tight seal through use of an "extremely soft and compliant and intrinsically 'sticky'" material that may be used to form the valve's third central seal member. *Id.* (citing Ex. 1005 ¶ 59 (describing material 166 as "compared to a gelatinous substance" that "exhibits a 'selfclosing' nature")).

On this record, we do not agree that this argument undermines Petitioner's challenge because the cited portion of Schaffer concerns only "one embodiment" of Schaffer's valve and the "sticky" or "selfclosing" material appears to be simply one optional feature. Ex. 1005 ¶ 59. Schaffer more broadly discloses that its seal member can be made of highly elastic, deformable, and compliant materials including modified vinyl, silicone, rubbers, or polyurethane. *See, e.g.*, *id.* ¶¶ 54 ("The third central seal member 165 includes a highly deformable, non-compressible material 166 (e.g., plastic)."), 57, 59; *see also* Ex. 1006 ¶ 16 ("cylindrical diaphragm of the valve may be constructed from a[n] elastomeric material such as silicone

rubber"). Those materials overlap with materials suitable for forming the '011 patent's "elongate member," which "can comprise an elastic, resilient material that may comprise silicone, urethane, ethylene-vinyl acetate, natural or synthetic rubbers or other elastomers known in the art." Ex. 1001, 7:19–27. And, even if the optional "sticky" material described in Schaffer can help to avoid gaps as suggested by Patent Owner, it is not evident why that would discourage the POSA from considering *other* known features in the field to mitigate potential gaps or leaks around inserted tools, such as suggested with Hartley's flexible member/string. Ex. 1006 ¶ 37.

Patent Owner further argues that modifying Schaffer to include Hartley's flexible string "would change Schaffer's principle of operation" and, therefore, the modification should be rejected. Prelim. Resp. 39–41 (citing Ex. 2001 ¶¶ 121–125, 129–131). First, Patent Owner contends that Schaffer's valve design uses "rigid" U-shaped actuating members, which allows those members to "forcibly disengage" the seal module upon pressing the actuator buttons. *Id.* at 39 (citing Ex. 1005 ¶ 77). According to Patent Owner, "[a] flexible string, like that of Hartley, would lack the necessary rigidity to perform that function." *Id.* (arguing a string can "deform or collapse instead of providing the necessary mechanical force to forcibly disengage the seal"). Second, Patent Owner argues that substituting a string would introduce manufacturing difficulties and reduce the durability of Schaffer's valve. *Id.* at 39–41. According to Patent Owner, Hartley's string cannot be manufactured through "machining" of aluminum or plastic like Schaffer's U-shaped actuating members; nor would a string be suitable for Schaffer's "simple assembly process" that allows the sealing module to be inserted through the housing and between each actuator while the actuator buttons are pressed. *Id.*; *see also id.* at 33–34 (arguing a "flexible" member

would deform or collapse and fail to maintain a sufficiently uniform opening for insertion of the sealing module (citing, e.g., Ex. 1005 ¶ 83)).

Whether a skilled artisan would have been motivated to combine the art's teachings with a reasonable expectation of success in arriving at the claimed subject matter is a fact-intensive inquiry. *Alza Corp. v. Mylan Labs., Inc.*, 464 F.3d 1286, 1289 (Fed. Cir. 2006) ("The presence or absence of a motivation to combine references in an obviousness determination is a pure question of fact"); *Par Pharm., Inc. v. TWi Pharma., Inc.*, 773 F.3d 1186, 1196 (Fed. Cir. 2014) ("The presence or absence of a reasonable expectation of success is also a question of fact[.]"). And the questions raised by Patent Owner—going specifically to the alleged reasons for and against modifying Schaffer as proposed—are highly fact intensive and, we determine, should be resolved on a full record developed and tested through trial. At this preliminary stage and for reasons noted below, Patent Owner's arguments do not defeat Petitioner's challenge.

First, and assuming Schaffer's U-shaped actuating members would be understood as "rigid," we are unpersuaded that Schaffer's "principle of operation" is altered in a manner that undercuts the alleged obviousness of claim 1. Although a structural change is proposed (as is common where obviousness is alleged), the operation and purpose is (at least arguably) materially unchanged in the modified Schaffer valve. Schaffer's valve, modified to include a flexible string or wire, selectively opens and closes a central lumen via the actuation of buttons, and by application of force and constriction, much like the unmodified Schaffer valve. Ex. 1003 ¶¶ 82–87. True, Schaffer teaches embodiments where movement of actuating members "forcibly disengage[s]" outer walls of the seal module "allowing" the seal module to "retract to an uncollapsed configuration where gases and fluids

can pass therethrough." Ex. 1005 ¶ 77. But it would seem, and Mr. Thornton testifies, the release of the tension/force on a flexible string in the proposed modification yields the same result—with the seal module passively returning to the open configuration. Ex. 1003 ¶¶ 82–87. Indeed, Schaffer expressly teaches that the seal member is sized and configured to maintain an open lumen when no compressive force is applied. Ex. 1005 ¶ 54. In other words, we question on this record whether Patent Owner is highlighting what is essentially a structural distinction without any material difference in the operation or purpose of the valve itself.[14]

Second, as it concerns the alleged negative impacts Petitioner's proposed changes to Schaffer's valve would have on manufacturability or durability, and whether those impacts might detract from the reasons for combining the art, the record may benefit from further argument and evidence on those issues. At this time, however, Petitioner persuades us the POSA would have been motivated to make the proposed changes, and that they would have been straightforward and within the POSA's engineering capabilities. *See, e.g.*, Ex. 1003 ¶¶ 80–84, 97–98; Ex. 1006 ¶ 31; Ex. 1007, 8:27–44, 14:37–53. Regarding alleged incompatibility between Petitioner's modification of Schaffer and manufacturing or assembly techniques noted in

[14] The parties may, as appropriate, consider providing further argument and evidence concerning how Schaffer's "principle of operation" or "intended purpose" should be defined. *See, e.g.*, *Plas-Pak Indus., Inc. v. Sulzer Mixpac AG*, 600 Fed. App'x 755, 758–760 (Fed. Cir. Jan. 27, 2015) (noting, e.g., aspects of the art's disclosures that may be relevant to such definitions); *Trivascular, Inc. v. Samuels*, 812 F.3d 1056, 1068–69 (Fed. Cir. 2016) (affirming the Board's finding of a lack of motivation to combine where a primary reference "taught away from substituting only the barbs, since the barbs were the primary objective of the reference, allowing the stent to be anchored to the vessel").

Schaffer, the parties might address further the importance of such techniques to Schaffer's overall disclosure and whether the alleged incompatibility would have been seen as a significant obstacle for the skilled artisan. *In re ICON Health & Fitness, Inc.*, 496 F.3d 1374, 1382 (Fed. Cir. 2007) (explaining that arguments of inoperability must not "ignore the modifications that one skilled in the art would make to a device borrowed from the prior art"). So too, even if there may be downsides to Petitioner's proposed combination as argued by Patent Owner, the parties may consider developing further relevant evidence weighing the overall benefits gained and lost. *Allied Erecting v. Genesis Attachments*, 825 F.3d 1373, 1381 (Fed. Cir. 2016) ("Although modification of the movable blades may impede the quick change functionality disclosed by [asserted prior art], '[a] given course of action often has simultaneous advantages and disadvantages, and this does not necessarily obviate motivation to combine'" (quoting *Medichem, S.A. v. Rolabo, S.L.*, 437 F.3d 1157, 1165 (Fed. Cir. 2006) (citation omitted)).[15]

We will revisit Petitioner's asserted reasons for modifying Schaffer or combining Schaffer with Hartley or Eller to the extent necessary on a fully-developed record. At this stage, however, Petitioner has put forth sufficient evidence and reasoning to meet its institution burden and proceed to trial on Grounds 2–4.

---

[15] "The fact that the motivating benefit comes at the expense of another benefit, however, should not nullify its use as a basis to modify the disclosure of one reference with the teachings of another. Instead, the benefits, both lost and gained, should be weighed against one another." *Winner Int'l Royalty Corp. v. Wang*, 202 F.3d 1340, 1349 n.8 (Fed. Cir. 2000).

G. Ground 5: Obviousness over Hartley and Eller

Petitioner contends that claims 1–3, 5, 6, and 9 would have been obvious over a combination of Hartley and Eller. Pet. 70–84; Ex. 1003 ¶¶ 144–181. In short, Petitioner contends that Hartley discloses all the limitations of independent claim 1 except for the "biasing system," which Petitioner contends is disclosed by Eller and would have been obvious to add to the valve of Hartley to ensure a quick seal during surgical procedures. *Id.* at 70–79.

On this record, we are unpersuaded that Petitioner is reasonably likely to prevail on its challenge to claim 1 (or the challenged dependent claims) under Ground 5. We agree with Patent Owner that Petitioner has not established that the modification of Hartley in view of Eller includes an actuator with a "first member" and a "second member" as claimed. Prelim. Resp. 44–48. The alleged "first member" and "second member" cited by Petitioner (Pet. 73) are simply portions of a single, unitary rotary actuator in Hartley. Prelim. Resp. 45–47 (citing Ex. 2001 ¶¶ 152–155 (citing, e.g., Ex. 1006, Fig. 3 (single rotary actuator 12)). Petitioner has not shown that the claimed "first member" and "second member" of claim 1 read on Hartley's single, unitary actuator or portions of that actuator where the string is knotted. Pet. 72 (citing Ex. 1006, Fig. 1, ¶ 31; Ex. 1003 ¶¶ 152–153).

IV. CONCLUSION

Based on this preliminary record, we determine that Petitioner has shown a reasonable likelihood that it will prevail with respect to at least one of the claims challenged in the Petition. We institute trial on all challenged claims under the grounds raised in the Petition. *PGS Geophysical AS v. Iancu*, 891 F.3d 1354, 1360 (Fed. Cir. 2018) (explaining that institution of

inter partes review "require[s] a simple yes-or-no institution choice . . . embracing all challenges included in the petition"); 37 C.F.R. § 42.108(a).

Any argument not raised in a Patent Owner Response to the Petition, or as permitted in another manner during trial, shall be deemed forfeited and/or waived even if asserted in the Preliminary Response. *In re Google Tech. Holdings LLC*, 980 F.3d 858, 862–864 (Fed. Cir. 2020) (holding an argument forfeited when not timely raised before the Board); *In re NuVasive, Inc.*, 842 F.3d 1376, 1380–81 (Fed. Cir. 2016) (holding Patent Owner waived an argument addressed in the Preliminary Response by not raising the same argument in the Patent Owner Response).

V. ORDER

In consideration of the foregoing, it is hereby:

ORDERED that, pursuant to 35 U.S.C. § 314(a), *inter partes* review of all challenged claims of the '011 patent is instituted on all grounds of unpatentability set forth in the Petition; and

FURTHER ORDERED that, pursuant to 35 U.S.C. § 314(a) and 37 C.F.R. § 42.4, notice is given of institution of trial commencing on the entry date of this Decision.

FOR PETITIONER:

Joshua J. Stowell
Joseph R. Re
Brian C. Barnes
KNOBBE, MARTENS, OLSON & BEAR, LLP
Joshua.Stowell@knobbe.com
Joe.Re@knobbe.com
Brian.Barnes@knobbe.com

FOR PATENT OWNER:

Joseph Hamilton
Paul Parker
PERKINS COIE LLP
hamilton-ptab@perkinscoie.com
parker-ptab@perkinscoie.com

From: PTACTS_System@uspto.gov <PTACTS_System@uspto.gov>
Sent: Thursday, January 23, 2025 9:30 AM
To: 2Jys <2Jys@knobbe.com>; hamilton-ptab@perkinscoie.com
Cc: 2jrr <2jrr@knobbe.com>; 2Bcb <2Bcb@knobbe.com>; parker-ptab@perkinscoie.com
Subject: IPR2024-01157: Institution Decision - Imperative Care, Inc. v. INARI MEDICAL, INC.

UNITED STATES PATENT AND TRADEMARK OFFICE
PATENT TRIAL AND APPEAL BOARD

Institution Decision Notice

AIA Review No.: IPR2024-01157
Petitioner: Imperative Care, Inc. of Campbell,, CA
Patent Owner: INARI MEDICAL, INC. of , CA
Patent No.: 11697011
Decision Date: 01/23/2025
Submitted By: PTAB, Trials@uspto.gov

A decision whether to institute a trial has been entered in the above case.

Questions regarding this receipt should be directed to the Patent Trial and Appeal Board at 571-272-7822 or e-mail to Trials@uspto.gov.

This e-mail is computer-generated. Do not reply to this e-mail because the e-mail box is not monitored.