Trials@uspto.gov
571-272-7822

Paper: 13
Date: October 10, 2025

UNITED STATES PATENT AND TRADEMARK OFFICE

BEFORE THE PATENT TRIAL AND APPEAL BOARD

IMPERATIVE CARE, INC.,
Petitioner,

v.

INARI MEDICAL, INC.,
Patent Owner.

IPR2025-00728
Patent 11,844,921 B2

Before JEFFREY N. FREDMAN, ERIC C. JESCHKE, and TIMOTHY G. MAJORS, *Administrative Patent Judges.*

MAJORS, *Administrative Patent Judge*.

DECISION
Granting Institution of *Inter Partes* Review
35 U.S.C. § 314

Imperative Care v. Inari Medical
IPR2025-00989
Imperative Care Ex. 1040

I. INTRODUCTION

Imperative Care, Inc. ("Petitioner") filed a Petition (Paper 1, "Pet.") requesting *inter partes* review of claims 1–7, 9, 10, 15–18, and 20–24 of U.S. Patent No. 11,844,921 B2 (Ex. 1001, "the '921 patent"). Pet. 1, 20. Inari Medical, Inc. ("Patent Owner") filed a Preliminary Response (Paper 6, "Prelim. Resp."). With our authorization, Petitioner also filed a Reply to Patent Owner's Preliminary Response (Paper 10, "Prelim. Reply").

Under 35 U.S.C. § 314(a), an *inter partes* review may not be instituted unless it is determined that there is a reasonable likelihood that the petitioner will prevail with respect to at least one of the claims challenged in the petition. For reasons explained below, we conclude that Petitioner shows a reasonable likelihood that it will prevail with respect to at least one of the '921 patent's challenged claims.[1] We institute *inter partes* review on all challenged claims. *See SAS Inst. Inc. v. Iancu*, 584 U.S. 357, 362–63 (2018); 37 C.F.R. § 42.108(a) ("When instituting *inter partes* review, the Board will authorize the review to proceed on all of the challenged claims and on all grounds of unpatentability asserted for each claim.").

Findings and conclusions at this stage are preliminary and based on the current record. Any final decision will be based on a full trial record.

II. BACKGROUND

A. Real Parties-in-Interest

Petitioner identifies itself as the real party-in-interest. Pet. 95. Patent Owner identifies itself as the real party-in-interest, and notes that it is a wholly-owned subsidiary of Stryker Corporation. Paper 3, 2.

---

[1] The Acting Director denied Patent Owner's request for discretionary denial. Paper 9.

B. Related Matters

The parties identify the following lawsuit involving assertion of the ’921 patent (and additional patents): *Inari Medical Inc. v. Imperative Care, Inc.*, No. 24-cv-3117 (N.D. Cal.).[2] Pet. 95; Paper 3, 2.

The parties also identify related matters before the Board. Pet. 95–96; Paper 3, 2–3. Those matters include: IPR2024-01157 (“the 1157 IPR”) as challenging the claims of U.S. Patent No. 11,697,011; IPR2024-01257 (“the 1257 IPR”) as challenging the claims of U.S. Patent No. 11,744,691; IPR2025-00156 (“the 0156 IPR”) as challenging claims of U.S. Patent No. 11,697,012; and IPR2025-00289 (“the 289 IPR”) as challenging claims of U.S. Patent No. 11,554,055. Pet. 95–96; Paper 3, 2–3.[3] *Id.*

Patent Owner further identifies numerous other patents and patent applications as related by priority to the ’921 patent. Paper 3, 3.

C. The ’921 Patent (Ex. 1001)

The ’921 patent is titled “Hemostasis Valves and Methods of Use.” Ex. 1001, code (54). The patent issued December 19, 2023, from an application filed April 29, 2021, and claims priority to a provisional application filed September 6, 2017. *Id.* at codes (22), (45), (60).

According to the ’921 patent, “the desire for improved patient outcomes has led to the development of hemostasis valves that facilitate minimally invasive surgery.” *Id.* at 1:24–26. “In minimally invasive

---

[2] Patent Owner further states that *Inari Medical, Inc. v. Inquis Medical, Inc.*, No. 24-1023-CFC (D. Del.) involves several other patents that “are not related by priority to the involved ’921 Patent but may involve related issues.” Paper 3, 2.

[3] The Board instituted trial in the 1157 IPR, 0156 IPR, and 289 IPR, and each of those cases is ongoing. We denied institution in the 1257 IPR.

surgery, small incisions are created through a blood vessel [into] which one or several catheters are inserted." *Id.* at 1:27–29. "These catheters are moved to a position proximate to tissue, nerves, or other body structures targeted by the surgery, and then tools for performing the procedure are inserted through the lumens of some or all of these catheters." *Id.* at 1:30–34. "To minimize blood loss, prevent delivery of air into the vasculature, and to facilitate maintenance of sterility within the patient's body . . . , these catheters are equipped with hemostasis valves." *Id.* at 1:35–38. The '921 patent states that "new and improved" hemostasis valves "are desired." *Id.* at 1:53–54.

The '921 patent discloses that "[t]he valve can include a tubular [elongate] member that can be constricted, collapsed, and/or sealed by one or several tensioning mechanisms." *Id.* at 1:65–2:1. According to the patent, "[t]he tensioning mechanism can include at least one filament that extends around at least a portion of the tubular member," and such "filament can interact with the tubular member to constrict, collapse, and/or seal the tubular member via manipulation of the tensioning mechanism(s)." *Id.* at 2:1–2:11 (disclosing that such valve, by action of the tensioning mechanism and filament, "can seal around a wide range of tool sizes and shapes" that are passed through the tubular member). The patent discloses that, in embodiments, the tensioning mechanism can include an actuator coupled to the filament, which actuator can be operated to control movement of the filament from a first position (where the central lumen is constricted and sealed) to a second position (where the central lumen is un-constricted and open). *Id.* at 2:51–62. Moreover, the patent explains, an actuator can be biased toward the first or second positions. *Id.* at 2:64–66.

We reproduce below the ’921 patent’s Figure 4 including annotations provided by Petitioner, with additional annotations added by the Board.

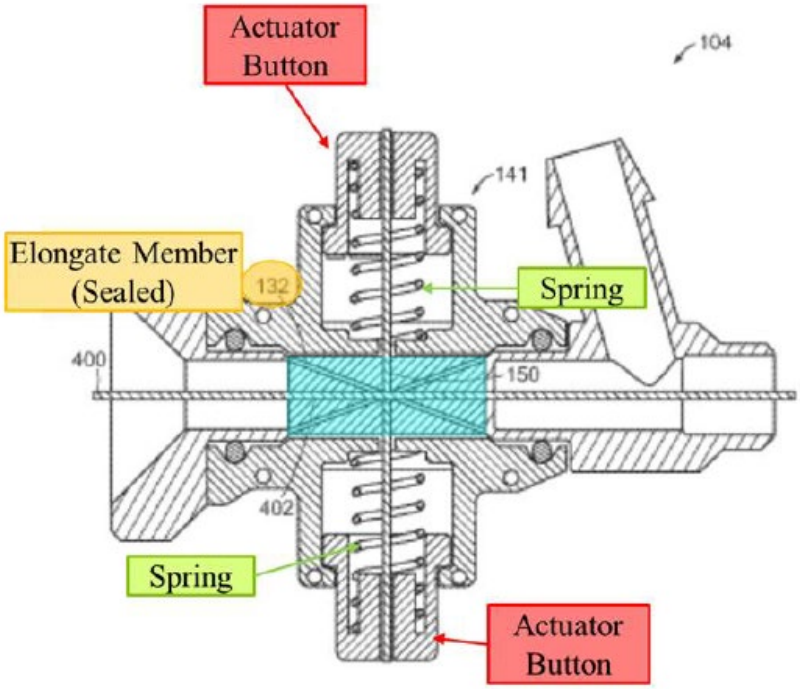

FIG. 4

Pet. 3 (modified by blue highlight added by Board); Ex. 1001, Fig. 4.

Figure 4, as depicted above, is a side cross-sectional view of an embodiment of valve (104) described in the ’921 patent. Ex. 1001, 5:27–29. The valve includes, *inter alia*, a housing, elongate member 132 (orange highlight) defining a central lumen and having a tool (400) inserted through that lumen, constricting mechanism 141, filament 150, and oppositely disposed actuator buttons (red highlights). *Id.* at 11:57–12:8; *see also id.* at Fig. 2 (additional view of the illustrative valve in a first/closed configuration), 8:32–50. In the embodiment depicted above, the filament is disposed around the elongate member and coupled to both actuator buttons (which are undepressed); the buttons are biased towards a first (i.e., closed) configuration by a bias feature (e.g., springs (green highlights)) such that the elongate member is collapsed

and sealed by the filament in the region highlighted blue. *Id.* at 8:32–50. Although not shown in the figure above, when the buttons are depressed, the constricting mechanism moves to a second (i.e., open) configuration where the "the filament 150 is loosened," allowing expansion of the elongate member and unsealing of the central lumen. *Id.* at 9:48–54, Fig. 3 (showing open configuration).

According to the '921 patent, the "filament 150 can be arranged in a variety of configurations." *Id.* at 13:10–11. For example, the filament can comprise a "single loop 604 that can extend around the elongate member 132 and/or through which the elongate member 132 can be received as shown in FIG. 6." *Id.* at 13:11–14. Alternatively, the filament may comprise one or more "U-shaped section[s]" or "bight[s]" like depicted in Figures 8 and 9. *Id.* at 13:23–33 (disclosing that "filament 150 can be configured to form a bight 800, which bight 800 can be a single bight or multiple bights" and, "[a]s used herein, a 'bight' refers to a U-shaped section between the two ends of the filament 150"). The patent further discloses that the "filament can be made from a variety of materials including, for example, a polymer, a synthetic, and/or a metal." *Id.* at 9:7–9.

Figures 6–9, showing multiple filament embodiments, are included below.

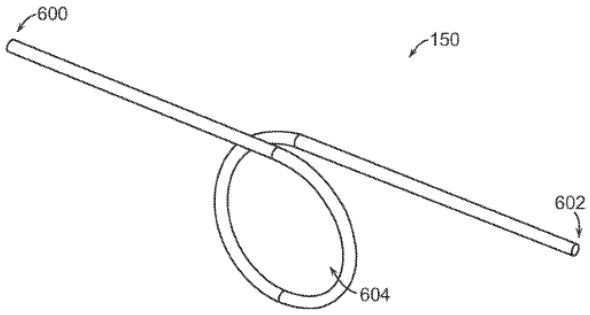

FIG. 6

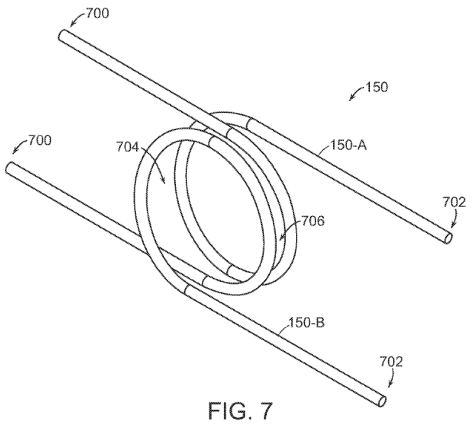

FIG. 7

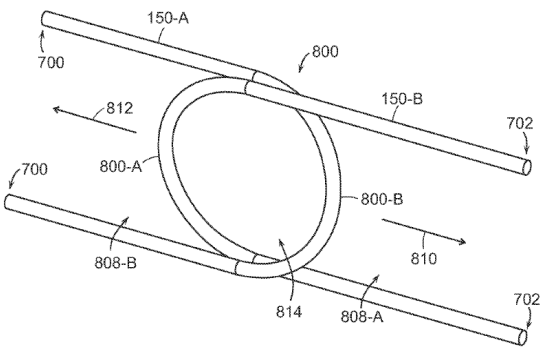

FIG. 8

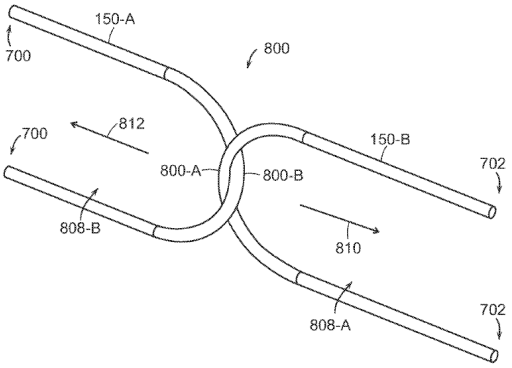

FIG. 9

Ex. 1001, Figs. 6–9. Figures 6–9 above illustrate various filament configurations: "single loop" (Fig. 6), "multiple loops" (Fig. 7), or one or more "bights" (Figs. 8 and 9), which can be non-interlocking or interlocking. *Id.* at 13:10–22 (describing "single loop 604" and "multiple loops" (704, 706) embodiments as depicted in Figs. 6 and 7, respectively), 13:23–65 (describing bight embodiments). According to the '921 patent, "the filament 150 can comprise multiple filaments . . . as shown in FIGS. 7 through 9." *Id.* at 12:54–56.

The '921 patent discloses that, in "loop" embodiments like shown in Figures 6 and 7, a filament can be configured to form a "loop" (or "loops") "that can extend around the elongate member 132 [(not shown)] and/or through which the elongate member can be received." *Id.* at 13:11–17. Further, the patent discloses, "a diameter or size of the loop 604, or of the loops 704, 706 can decrease when the constricting mechanism 141 is moved from the second configuration to the first configuration." *Id.* at 13:19–22.

Figures 8 and 9 show a filament comprising first and second "bights" 800-A, 800-B that extend around respective portions of an elongate member. *Id.* at 13:23–44. The "bights" together define an "encircled area 814" into which the elongate member can be received, and movement of those bights in the directions indicated by arrows 812 and 810 "decreases the size of the

encircled area 814 and constricts, collapses, and/or seals the elongate member 132 extending through the encircled area." *Id.* at 13:54–65.

D. Illustrative Claims

Petitioner challenges claims 1–7, 9, 10, 15–18, and 20–24. Claim 1 is illustrative and is reproduced below:

> 1. A valve, comprising:
>
> an elongate member defining a lumen;
>
> an active tensioning mechanism including an actuator coupled to the elongate member via a filament extending at least partially around the elongate member, wherein the actuator is moveable between (a) a first position wherein the lumen is constricted and sealed and (b) a second position wherein the lumen is at least partially open; and
>
> a biasing member configured to bias the actuator to the first position.

Ex. 1001, 22:12–22. To illustrate the subject matter of some of the challenged dependent claims, claims 3 and 4 depend from claim 1 and recite, respectively, "wherein the filament extends in a loop around the elongate member" and "wherein the actuator is a button, wherein the button is undepressed in the first position, and wherein the button is depressed in the second position." *Id.* at 22:25–29.

E. Prior Art and Asserted Grounds

Petitioner asserts that claims 1–7, 9, 10, 15–18, and 20–24 are unpatentable based on the following grounds:

Grounds	Claims Challenged	35 U.S.C. §[4]	Reference(s)/Basis
1	1–7, 9, 10, 15–18, 20–24	102	Schaffer[5]
2	1–7, 9, 10, 15–18, 20–24	103	Schaffer
3	1–7, 9, 10, 15–18, 20–24	103	Schaffer, Hartley[6]
4	1–7, 9, 10, 15–18, 20–24	103	Schaffer, Eller[7]
5[8]	1–3, 5, 6, 9, 15–18, 21–24	103	Hartley, Eller

Petitioner also relies on testimony from Troy L. Thornton (Ex. 1003) in support of its challenge. Patent Owner provides responsive testimony from Paul J. Zalesky, Ph.D. Ex. 2024.

---

[4] The Leahy-Smith America Invents Act ("AIA"), Pub. L. No. 112–29, 125 Stat. 284, 285–88 (2011), revised 35 U.S.C. §§ 102, 103 effective March 16, 2013. Based on the uncontested assertion that September 6, 2017, is the earliest possible priority date for the '921 patent, we apply the AIA versions of §§ 102 and 103 in this Decision. Pet. 16.

[5] Schaffer et al., US 2003/0225379 A1, published Dec. 4, 2003 (Ex. 1005 ("Schaffer")).

[6] Hartley, US 2003/0116731 A1, published June 26, 2003 (Ex. 1006 ("Hartley")).

[7] Eller, US 9,980,813 B2, issued May 29, 2018 (Ex. 1007 ("Eller")).

[8] The Petition includes a heading labeled as "Grounds 5–7 . . ." (Pet. 76) and a table where claim 10 is listed as being challenged under Ground 5 (Pet. 20). There are, however, no Grounds 6 or 7 and claim 10 is not addressed under Ground 5. We treat the above as typographical errors.

III. ANALYSIS

A. Legal Standards

"In an [*inter partes* review], the petitioner has the burden from the onset to show with particularity why the patent it challenges is unpatentable." *Harmonic Inc. v. Avid Tech., Inc.*, 815 F.3d 1356, 1363 (Fed. Cir. 2016) (citing 35 U.S.C. § 312(a)(3)).

A claim is unpatentable under 35 U.S.C. § 103 if the differences between the claimed invention and the prior art are such that the claimed invention as a whole would have been obvious at the time the invention was made[9] to a person having ordinary skill in the relevant art. *KSR Int'l Co. v. Teleflex Inc.*, 550 U.S. 398, 406 (2007). The question of obviousness is resolved on the basis of underlying factual determinations including: (1) the scope and content of the prior art; (2) any differences between the claimed subject matter and the prior art; (3) the level of ordinary skill in the art; and (4) secondary considerations (i.e., objective indicia) of nonobviousness when presented.[10] *Graham v. John Deere Co.*, 383 U.S. 1, 17–18 (1966).

To show unpatentability based on a combination of teachings, "[a]n obviousness determination [also] requires finding both that a skilled artisan would have been motivated to combine the teachings of the prior art references to achieve the claimed invention, and that the skilled artisan

---

[9] The AIA revised § 103 such that obviousness is assessed "before the effective filing date of the claimed invention," but *KSR* and other obviousness precedents cited herein remain applicable despite this change in the timing of the obviousness inquiry.

[10] Petitioner states that it is not aware of any objective indicia of nonobviousness (Pet. 92) and Patent Owner's Preliminary Response does not provide argument about any objective indicia.

would have had a reasonable expectation of success in doing so." *CRFD Rsch., Inc. v. Matal*, 876 F.3d 1330, 1340 (Fed. Cir. 2017) (internal quotation marks omitted).

B. Level of Ordinary Skill in the Art

Petitioner proposes that the person of ordinary skill in the art ("POSA") "would have had an undergraduate degree in mechanical engineering or a related engineering discipline and 2–4 years of product design or engineering experience." Pet. 16 (citing Ex. 1003 ¶ 35).

Patent Owner elaborates on Petitioner's proposed POSA definition. Prelim. Resp. 10–12. Patent Owner states that the POSA "would have had an undergraduate degree in mechanical engineering or a related engineering discipline and 2–4 years of product design or engineering experience *designing medical devices in the field of the '921 Patent*." *Id.* at 10 (citing Ex. 2024 ¶¶ 61–62) (emphasis added). Patent Owner critiques Petitioner's proposed POSA level because it "omits any requirement of experience in designing medical devices generally, let alone in the field of the '921 Patent." *Id.* at 11.

We agree with Patent Owner that Petitioner's proposed POSA definition lacks specificity. That definition, if interpreted generically, could mean that a person may qualify as a POSA if they had, for example, a B.S. in mechanical engineering and only two years of experience designing or engineering *any type of product in any field*. That is too broad.

We find that a POSA would have had the agreed-upon educational credentials—an undergraduate degree in mechanical engineering or a related engineering discipline. Ex. 1003 ¶ 35; Ex. 2024 ¶ 61.

We find that a POSA would also have had 2–4 years of design or engineering experience related to products in the field of the invention,

which involves endovascular devices and the surgical procedures that use such devices. Ex. 1001, 1:16–54 (background of the invention). Such devices include, but are not necessarily limited to, hemostasis valves and catheters for minimally-invasive vascular surgeries. *Id.* And, consistent with the testimony of the parties' experts, the POSA need not have had first-hand experience *designing* hemostasis valves. *See, e.g.*, Ex. 1037 (Zalesky Tr.), 72:11–73:7 (testifying direct experience "designing" hemostasis valves or aspiration catheters is not necessary, but "general experience with vascular devices and procedures" is required); Ex. 2030 (Thornton Tr.), 180:13–19. Further, as Dr. Zalesky testified, the POSA's experience related to developing such devices "could be as simple as bench testing and looking at clinical data." Ex. 1037, 74:5–75:1. Lastly, a POSA would have had an understanding of such devices' design requirements as determined by the needs of the physician, patient, and procedure, which understanding may be informed by work experience and/or study. Ex. 2030, 24:5–21.

Based on this preliminary record and absent argument to the contrary from the parties, Mr. Thornton and Dr. Zalesky both appear to have at least the qualifications of the POSA and are capable of testifying about the POSA's perspective. *See, e.g.*, Ex. 1003 ¶¶ 5–14 (summarizing background and qualifications); Ex. 2024 ¶¶ 7–19 (same).

C. Claim Construction

In an IPR, we construe claims using the same claim construction standard used in a civil action before the courts under 35 U.S.C. § 282(b), including construing claim language in accordance with its ordinary and customary meaning as understood by the POSA, in view of the patent's specification and considering the patent's prosecution history. 37 C.F.R. § 42.100(b). We need only construe terms where the parties dispute a term's

meaning and only to the extent needed to resolve the controversy. *Realtime Data, LLC v. Iancu*, 912 F.3d 1368, 1375 (Fed. Cir. 2019).

The parties dispute the interpretation of the term "filament," which appears in each of the challenged claims. Pet. 17–20; Prelim. Resp. 12–27 (rebuttal argument). We address this dispute below.

Independent claim 1 recites, among other limitations, "an active tensioning mechanism including an actuator coupled to the elongate member via a *filament* extending at least partially around the elongate member." *See supra* Section II.D. (emphasis added).

According to Petitioner, a POSA would have understood a "filament" to mean "at least 'one or more threads, lines, cords, ropes, ribbons, flat wires, sheets, or tapes.'" Pet. 17 (citing Ex. 1003 ¶¶ 49–59). Petitioner contends this interpretation is consistent with the Board's observation that such structures (e.g., thread, ribbon, etc.) are listed as examples of filaments in the disclosure of the related patent challenged in the 1157 IPR. *Id.* at 17–18 (citing Ex. 1017, 12–13); *see also id.* at 19 (citing Ex. 1001, 9:15–17 (disclosing "the filament 150 can comprise one or several threads, lines, cords, rope, ribbon, flat wire, sheet, or tape")).

Petitioner also argues the claimed "filament" *need not* be thin or flexible. Pet. 18. According to Petitioner, the challenged patent never uses the word "flexible" when describing the filament, construing the term to require flexibility injects ambiguity into the claim, and, in a related patent, the claims recite a filament that "is flexible"—demonstrating that flexibility is not an inherent property of filaments. *Id.* (citing, e.g., Ex. 1003 ¶¶ 51–54; Ex. 1016, claim 1).

For its part, Patent Owner argues that a "filament" should be "accorded its plain and ordinary meaning," which a POSA would have

understood as "a thin, flexible length of material formed by one or more strands of material." Prelim. Resp. 12. According to Patent Owner, this interpretation is consistent with the claims, Specification, and prosecution history, and is further supported by extrinsic evidence, including dictionary definitions and the testimony of Petitioner's own declarant. *Id.* at 12–28 (citing, e.g., Ex. 1001, claim 1, 9:36–37, 9:53–56, Figs. 6–9; Ex. 2028, 123:1–3; Ex. 2030, 131:16–132:12; Ex. 2024 ¶¶ 67–87).

The parties' core claim construction dispute is whether the claimed filament must be "flexible." This dispute has special relevance to Grounds 1 and 2, where Schaffer is the only asserted reference. *See supra* Section II.E. According to Patent Owner, because filaments require flexibility, Schaffer's "rigid" actuating members cannot be a filament and, thus, Petitioner has not shown that Schaffer discloses all elements of the valves as claimed. *See, e.g.*, Prelim. Resp. 29–31. Conversely, for Grounds 3–5 there is no dispute that a "filament" is disclosed in the combined teachings of the relied-upon art supporting those grounds, for example, Schaffer plus Hartley (Ground 3). Pet. 22–23, 34–35 (citing Hartley's "flexible member," i.e., a "string" as meeting the filament limitation (Ex. 1006 ¶¶ 17, 31)).

We agree with Petitioner that a "filament" encompasses one or more threads, lines, cords, rope, ribbon, flat wire, sheet, or tape. The '921 patent lists those as example structures that may comprise a filament. Ex. 1001, 9:15–17 ("In some embodiments, the filament 150 can comprise one or several threads, lines cords, rope, ribbon, flat wire, sheet, or tape.").

That does not, however, address the dispute about "flexibility." On that issue, the argument and evidence at this stage tends to favor Patent Owner's position that a "filament" as claimed is flexible.

Patent Owner cites intrinsic evidence in support of its interpretation, which include claim 1's recitation of an "active *tensioning* mechanism" comprising the filament and the Specification's description of a filament that can be both "loosened" and "tightened." Prelim. Resp. 14–16 (citing, e.g., Ex. 1001, 9:36–37, 9:53–56 (teaching "the filament 150 is tightened" when the actuator buttons are released and "the filament 150 is loosened" when the buttons are pressed to open the valve)); *see also* Ex. 2025, 1288 (defining "tension" as to "tighten to a desired or appropriate degree"). These descriptions from the patent appear at this stage more consistent with the view that the filament is characteristically flexible, not rigid.

So too, as we explained in related matters, the '921 patent's loop embodiments (where the filament forms one or more loops like depicted and described in Figures 6–7) require a flexible structure. *See, e.g.*, Ex. 2032, 15–16 (explaining that the device would not work to constrict the tubular sidewall and lumen (analogous to the elongate member defining a lumen of the claims here) if the filament forming the loop(s) was inflexible); Ex. 1001, Figs. 6–7 (filament 150, with sub-filaments 150-A and 150-B). Although flexibility of the filament in the patent's "bight" embodiments (e.g., as shown in Figures 8 and 9) is not manifestly clear, there is a dearth of evidence from Petitioner—either intrinsic or extrinsic to the patent—showing why a POSA would have understood the bights as embracing rigid structures. *See* Ex. 1001, Figs. 8–9 (similar to the loop embodiments, depicting structures 150-A and 150-B forming sub-filaments of the bight(s)). Moreover, as admitted by Petitioner's expert, that a filament may be made from various materials described in the patent (e.g., synthetics or metals) does not, absent more information, lead to a conclusion that a filament is "rigid." Ex. 2030, 125:2–126:4 (testifying "the relative stiffness or rigidity

is not clear from those . . . materials without knowing much more information"), 131:25–132:12 (testifying "you would need to know more details about the material and the dimensions and the construction of those materials to be able to quantify or compare relative flexibility of one element versus another").

Patent Owner also cites excerpts of the prosecution history in support of its proposed construction. Prelim. Resp. 20–25. As Patent Owner points out, the Examiner cited only flexible structures in the prior art as satisfying the claimed "filament" for the '921 patent and related applications and never cited inflexible/rigid valve features as doing so. *Id.* (arguing Examiner understood and applied Hartley's string as being the "filament"—not the "rigid actuating structures of Wong, Kees, and Williams"); Ex. 1002, 25–26, 29; Ex. 2020, 4–5 (finding that Wong and Kees are "missing the filament"); Ex. 2024 ¶¶ 78–86 (reviewing prosecution history and testifying that the Examiner's express or tacit determination that the slider, pinch elements, and clamp/rib of Wong, Kees, and Williams did not teach a "filament" is consistent with a determination that the plain and ordinary meaning of a filament is not rigid and instead requires flexibility).

Extrinsic evidence also lends support to Patent Owner's interpretation of a "filament" as requiring flexibility. Patent Owner cites, for example, dictionaries that define a filament as "a single thread or a thin flexible threadlike object, process, or appendage" and "a slender threadlike object or fiber." Prelim. Resp. 25 (citing Ex. 2025 (Merriam-Webster Collegiate Dictionary), 467; Ex. 2026 (New Oxford American Dictionary), 644). And Patent Owner cites Mr. Thornton's concession at deposition in related court proceedings that "in the ordinary meaning of filament, it has flexibility." *Id.* at 12–13 (quoting Ex. 2028, 123:1–3); *see also* Ex. 2029 (Thornton patent),

8:7–9, 8:53 (equating a "filament" with a "thread-like element" that can be "laced or threaded" through other structures).

Petitioner's argument that the '921 patent never uses the word "flexible" to describe the filament is literally true but not decisive on this record. *See* Pet. 18–19 (counterarguments against construing to require flexibility). Neither does the patent use the words "rigid," "inflexible," or the like to describe a filament. And Petitioner has not accounted for the intrinsic and extrinsic evidence discussed above, which would require flexibility or is at least more suggestive that, in its plain and ordinary meaning, a filament is flexible.

As to whether requiring that a filament be "flexible" injects potential ambiguity into the claims (as potentially a term of degree), evidence indicates a POSA would have understood the level of flexibility needed for the claimed valves to work as described. *See, e.g.*, Ex. 2024 ¶ 89 (testifying the filament would be flexible to the degree needed to loosen or slacken when the actuator is depressed); Ex. 2031, 44:14–20 (testifying, in response to the question "a person of ordinary skill in the art in 2017 would have understood what that level of flexibility would be, wouldn't they?" that "I think they could figure it out").

Finally, the recitation in a related patent's claim that a "first filament is flexible" fails to demonstrate persuasively that flexibility is not a requirement of the term "filament" alone. Pet. 18 (citing Ex. 1016, claim 1). The claim in question from the related patent is an apparent instance of redundancy in the language chosen because additional claim elements already suggest that the filament is flexible—and would do so even if the express recitation of "flexible" was missing. *ERBE Elektromedizin GmbH v. Canady Tech. LLC*, 629 F.3d 1278, 1286 (Fed. Cir. 2010) (explaining that

"surplusage may exist in some claims"). That additional language includes, for example, "a first filament extending in a first loop around the tubular member" with first and second portions of the filament operably connected, respectively, to first and second actuators, as well as the requirement that the actuators are positioned to "tension" and "loosen" the filament when those actuators are operated. Ex. 1016, claim 1. Based on the current record, we are unpersuaded that this evidence justifies construing the term "filament" in the challenged claims of the '921 patent as encompassing flexible *and inflexible* structures.

We will revisit the interpretation of the term "filament" to the extent needed on a fully-developed trial record. Preliminarily, however, we conclude that the evidence supports Patent Owner's position and a POSA would have understood the plain and ordinary meaning of filament as a flexible length of material (e.g., one or more string(s), wire(s), tape(s)).[11]

D. Asserted References

Petitioner asserts, and Patent Owner does not dispute, that Schaffer, Hartley, and Eller are each prior art under 35 U.S.C. § 102(a)(1). Pet. 20.

1. Schaffer (Ex. 1005)

Schaffer is a U.S. patent application that published December 4, 2003. Ex. 1005, code (43). Schaffer is titled "Composite Stasis Valve" and

[11] We recognize Petitioner's contention that interpreting a filament as comprising "one or more *strands*" of material, as proposed in part of Patent Owner's construction, is at odds with some illustrative filament structures listed in the '921 patent (i.e., a "sheet" of material). Pet. 18 (emphasis added). Although Patent Owner argues there is no inconsistency because a sheet/tape of metal/polymer "would comprise one strand of material" (Prelim. Resp. 18), we need not adopt Patent Owner's inclusion of "strands" in its proposed construction to resolve the controversy before us.

describes a "valve for blocking the flow of gas or fluid with or without an instrument in place within the gas/fluid path." *Id.* at Abstr., code (54); *see also id.* ¶¶ 2–3 (disclosing that Schaffer "relates to catheters, in particular to composite fluid-stasis valves for use with catheters" and "[f]luid stasis mechanisms are commonly used to prevent loss of fluids from the insertion site of a catheter").

An embodiment of Schaffer's fluid-stasis valve, including Petitioner's annotations, is shown below.

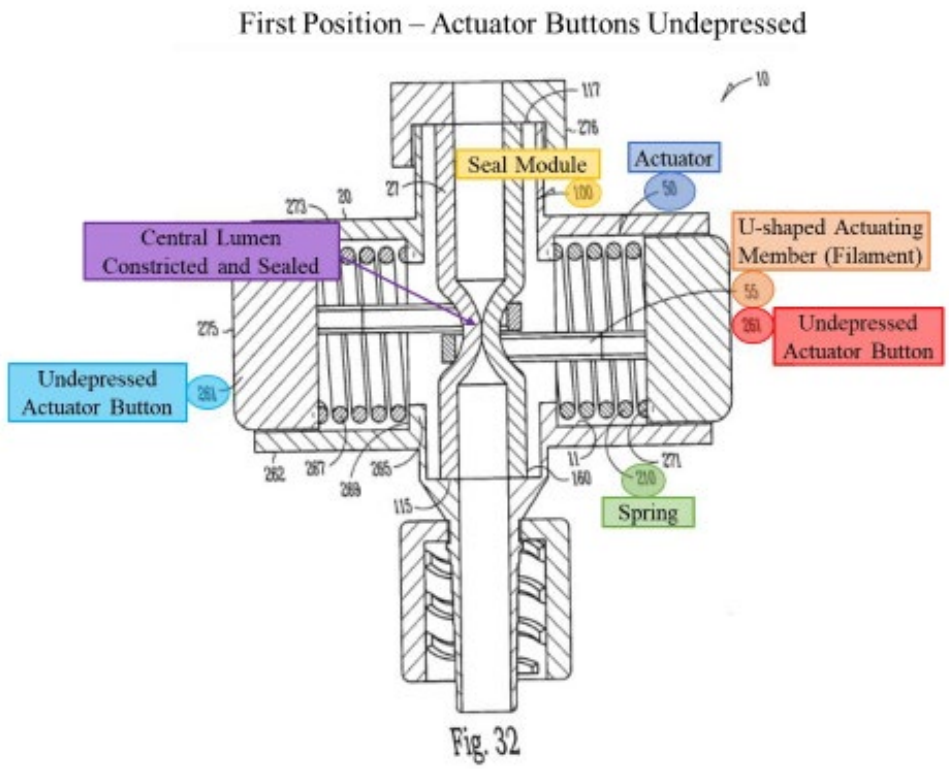

Pet. 28 (Ex. 1008, Fig. 32[12] (annotated)); Ex. 1005, Fig. 32, ¶ 75 ("FIGS. 30–34 illustrate one embodiment of the stasis valve 10 including a seal module 100 having a lumen sized to allow the passage of fluids or

[12] Petitioner uses drawings from the Schaffer application submitted during prosecution (Ex. 1008) due to those drawings' improved clarity versus the version of the drawings appearing in Schaffer as published. Pet. 4 n.2.

gases."); Ex. 1008, 16–19 (Figs. 30–34). Schaffer's Figure 32, above, is a cross-sectional view of valve 10 in a "first position," where actuator buttons 261 (light blue and red highlights) are undepressed, allowing seal module 100 (yellow highlight) to take on a collapsed configuration such that a central lumen (purple highlight) is at least partially collapsed/constricted and sealed by a compressive force provided by spring(s) (green highlight), which force is applied to U-shaped actuating member(s) 55 (orange highlight) that Petitioner argues are a "filament." Ex. 1005, Fig. 32, ¶¶ 75–77; Pet. 28.

Schaffer discloses that, in the first position, actuating members 55 "are, in one option, disposed at least partially circumferencially [*sic*] disposed about" the seal module "depressing and at least partially collapsing a portion 108 of the containment structure 160 by a compressive force 67 (e.g., by a spring 210)." Ex. 1005 ¶ 77. Schaffer teaches actuating members may optionally comprise aluminum or plastic. *Id.* ¶¶ 81, 82 (actuating members and buttons may, for example, be machined from aluminum).

When the actuator buttons are pressed, the valve takes on a "second [open or unsealed] position." Ex. 1005 ¶ 77, Fig. 34 (showing the valve with both buttons depressed such that central portion of the valve lumen/seal module retracts to an unsealed configuration). According to Schaffer:

> In the second position, the actuators 50 are disposed away from a portion 108 of the seal module 100 by a compressive force 67 (e.g., by depressing the distal end 275 of the actuator button 261). As each actuator button 261 is depressed, each actuator 50 slides along the cylindrical interior wall 11 of the housing 20. The proximal end 273 of each actuator button 261 compresses the distal end 271 of each resilient member 267 which in turn, the proximal end 269 of each resilient member 267 compresses against the inner flange wall 265 of the housing 20. Such movement allows each engaged actuating member 55 to forcibly disengage opposing outer walls 27 of seal module 100 allowing

> the portion 108 of the containment structure 160 to retract to an uncollapsed configuration where gases and fluids can pass therethrough.

Id. ¶ 77, Fig. 34.

2. Hartley (Ex. 1006)

Hartley is a U.S. patent application that published June 26, 2003. Ex. 1006, code (43). Hartley is titled "Access Valve" and relates to an access valve for laparoscopic or intralumenal deployment devices. *Id.* at Abstr., code (54); *see also id.* ¶ 3 ("The invention will be discussed in . . . relation to fluid flow prevention and access valves in medical applications for instance where it is desired to seal around a catheter or other instrument . . . to prevent loss of blood or other fluid.").

Hartley's Figure 5 is reproduced below.

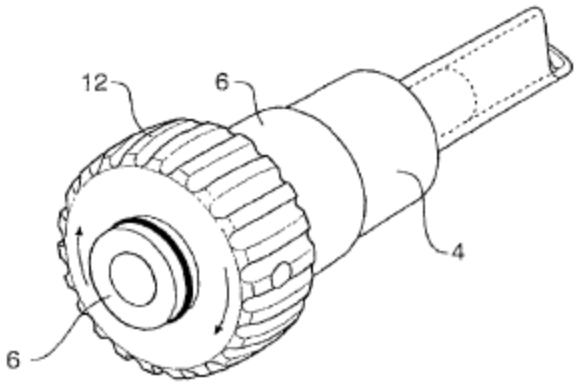

Fig 5

Ex. 1006, Fig. 5. Figure 5 above is a perspective view of an illustrative delivery catheter and constriction valve described in Hartley. *Id.* ¶ 29. The valve includes, *inter alia*, catheter body 4, cylindrical housing 6, and rotary actuator 12. *Id.* ¶ 31.

The action of Hartley's valve is more clearly seen in Figures 3 and 4, reproduced side-by-side below.

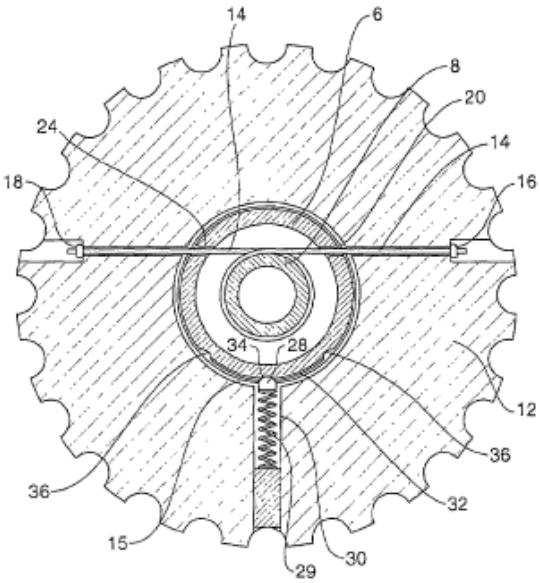

Fig 3

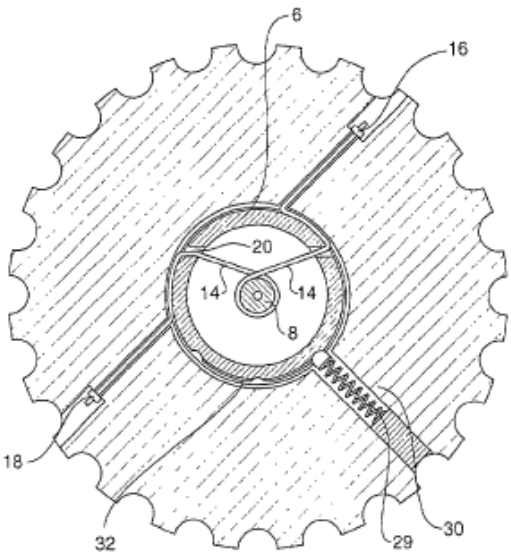

Fig 4

Ex. 1006, Figs. 3–4. Figures 3 and 4 of Hartley are top, cross-sectional views of a constriction valve, showing, respectively, the valve in an open and closed configuration. *Id.* ¶¶ 27–28, 31–34. In the open configuration (above left), rotary actuator 12 is mounted to cylindrical housing 6, and a string 14 is mounted to portions of the rotary actuator with knots 16, 18. *Id.* ¶ 31. String 14 (or another suitable flexible member) is wound around a cylindrical elastomeric diaphragm 8. *Id.*; *see also id.* ¶¶ 16–17 ("The flexible member may be a string, suture or band or other suitable material.").

Hartley teaches that "[r]otation of the rotary actuator 12 with respect to the cylindrical housing 6 will cause the string 14 to be pulled in both directions at once and hence the cylindrical diaphragm 8 to be constricted" and sealed as shown in Figure 4 (above right). Ex. 1006 ¶¶ 31, 34. According to Hartley, its invention provides "an access or constriction valve arrangement which will close over a range of diameters of devices passed through the valve or can close completely down to be self[-]sealing." *Id.* ¶ 37.

3. Eller (Ex. 1007)

Eller is a U.S. patent that issued May 29, 2018, from an application filed April 17, 2015. Ex. 1007, codes (22), (45). Eller relates to "[s]elective fluid barrier valve devices" and methods of treatment using such devices. *Id.* at Abstr.

Eller describes "a selective fluid barrier device compris[ing] a housing, an actuator, a sleeve, a wire member, and a connector." Ex. 1007, Abstr. "The sleeve defines a passageway that extends through the [valve]" and [t]he actuator is movable between a first position and a second position" where the first position allows fluid to pass through the sleeve and, in the second position, fluid cannot pass through the sleeve. *Id.*

An embodiment of Eller's selective fluid barrier valve device is shown in Figure 15 below.

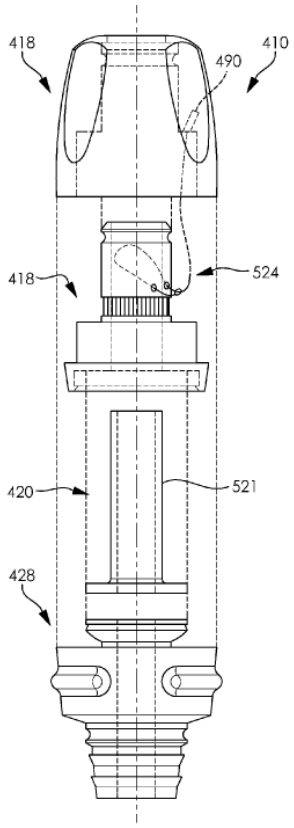

FIG. 15

Ex. 1007, Fig. 15; *see also id.* at Figs. 1–2 (perspective and exploded views of similar valve device). Figure 15, reproduced above, is an exploded view of an illustrative selective fluid barrier valve of Eller. The valve device 410 includes, among other features, actuator 418, sleeve 420, and a wire member 422 (not labeled) with a first end 524 attached to actuator 418 within cavity 490. *Id.* at 21:37–22:10 ("wire member can be positioned such that it extends at least one full revolution around the outer surface of the sleeve"); *see also id.* at Figs. 16–17 (showing wire 422 looped around sleeve 420 within housing 416). As disclosed in Eller, movement (e.g., rotation) of the actuator from its first position to its second position pulls the wire member to constrict and close sleeve 420. *See, e.g.*, *id.* at 22:25–31, 1:55–2:6 (disclosing that, in the second configuration, "the sleeve passageway is closed and prevents fluid from passing"). Eller further teaches that the valve device can "be biased to the second [(closed)] configuration" by, for example, using a spring. *Id.* at 19:22–30.

Eller teaches that its disclosure applies to many types of actuators. Ex. 1007, 8:27–44. According to Eller, "while a rotatable member 29 has been illustrated, a selective fluid barrier valve device can include any suitable actuator capable of moving . . . between a first configuration and a second configuration. Skilled artisans will be able to select a suitable actuator" and "[e]xample actuators . . . include rotatable actuators, linear actuators, slidable actuators . . . and any other actuator considered suitable for a particular embodiment." *Id.*

Eller discloses that a "wire member . . . can have any suitable structure and comprise any suitable number of strands and/or fibers that are twisted, or otherwise interconnected to one another." Ex. 1007, 15:61–16:6 (teaching "wire member can comprise a suture or a cable"). Eller discloses

that "[a]ttachment between a wire member and a housing and/or an actuator can be accomplished using any suitable method or technique" including, for example, "adhesives, welding, [or] fusing." *Id.* at 14:37–53.

E. Anticipation by Schaffer (Ground 1)

Petitioner contends that Schaffer describes a valve having all the elements of claims 1–7, 9, 10, 15–18, and 20–24, and, thus, Schaffer anticipates those claims. Pet. 21–75.[13] We focus on claim 1 below, noting that each of the challenged claims requires a valve comprising, among other features, a "filament." *See, e.g.*, Ex. 1001, 22:12–22 (claim 1), 23:15–25 (claim 15), 24:1–12 (claim 21).

According to Petitioner, Schaffer's actuating members are "filaments" as claimed. Pet. 29–30. Petitioner reproduces Schaffer's Figure 31 below, with Petitioner's annotations.

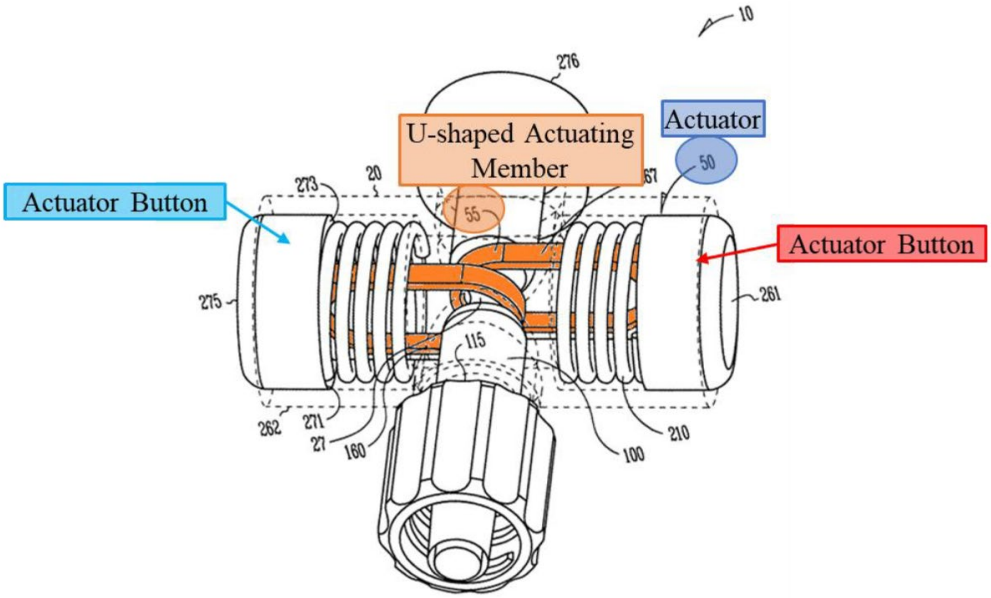

Fig. 31

[13] Petitioner intersperses its anticipation and obviousness analyses for Grounds 1–4 throughout pages 21–75 of the Petition.

Pet. 30; Ex. 1005, Fig. 31 (annotated), ¶ 76; Ex. 1008, 81 (Fig. 31). The image above is a perspective view of a stasis valve 10 comprising an actuator 50 (dark blue) with opposing actuator buttons (light blue and red highlights) and two U-shaped actuating members 55 (orange highlights). Petitioner argues that Schaffer's actuating members "resemble a ribbon, flat wire, sheet, or tape" and, therefore, under its claim interpretation, Petitioner contends those actuating members are "filaments" as recited in the challenged claims. Pet. 30–31 (citing Ex. 1003 ¶ 79).

Based on the current record, we are unpersuaded that Schaffer describes a valve with a filament as claimed. If, as construed above (*supra* Section III.C), a filament requires flexibility, Petitioner has not demonstrated that Schaffer describes such a feature in its valves. Instead we agree with Patent Owner that Petitioner "implicitly admits" that Schaffer's actuating members are rigid insofar as Petitioner argues those members would form gaps for fluid leakage around tools inserted through the central lumen when in use and compared to the use of a flexible string or wire (of Hartley or Eller). Prelim. Resp. 29 (citing Pet. 36). Moreover, we find Dr. Zalesky's interpretation of Schaffer more plausible than Mr. Thornton's on the question of whether a POSA would have regarded Schaffer's actuating members as being substantially rigid structures. Ex. 2024 ¶¶ 92–100 (testifying, *inter alia*, that a POSA would have understood from Schaffer's disclosure about making the actuator and actuating members from machining pre-existing amounts of metals and/or plastics, and further explaining that flexible parts would deform and be difficult to machine through conventional techniques); Ex. 1005 ¶¶ 81–82.

Mr. Thornton testifies that Schaffer's disclosed manufacturing techniques for the actuator/actuating members are only examples and "a

person of ordinary skill in the art could have simply purchased pre-made [and flexible] flat wire or plastic tapes or ribbons." Ex. 1003 ¶ 79. Such testimony invokes, at best, obviousness-based reasoning. This does not establish that Schaffer alone describes a filament sufficient to anticipate the claims. *Trintec Indus., Inc. v. Top-U.S.A. Corp.*, 295 F.3d 1292, 1296 (Fed. Cir. 2002) (explaining that the "test for novelty" requires "strict identity"); *Jamesbury Corp. v. Litton Indus. Prods., Inc.*, 756 F.2d 1556, 1560 (Fed. Cir. 1985) (holding "anticipation is not shown by a prior art disclosure which is only 'substantially the same' as the claimed invention"), *overruled on other grounds*, *A.C. Aukerman Co. v. R.L. Chaides Constr. Co.*, 960 F.2d 1020 (Fed. Cir. 1992) (en banc).

Because we determine on this preliminary record that Schaffer does not describe a valve comprising a "filament" as claimed, Schaffer cannot anticipate the challenged claims.

F. Obviousness over Schaffer (Ground 2)

Petitioner argues that, even if Schaffer did not disclose filaments having a structure and flexibility sufficient to constrict and seal the central lumen against leakage, a POSA "would have found it obvious to modify the actuating members to closely conform to the seal module" where, for instance, a POSA "could have selected a thin, flexible sheet or flat ribbon of aluminum or plastic to form the actuating members." Pet. 32–33 (citing Ex. 1003 ¶ 81).

Petitioner's analysis and evidence for Ground 2 is threadbare, unpersuasive, and evokes a hindsight bias. Under this ground, Petitioner cites, for example, no disclosure of "thin, flexible sheet[s] or flat ribbon[s]" representing the claimed "filament" in any reference, much less in any

reference that is analogous prior art.[14] Nor does Petitioner explain sufficiently how such materials would have been incorporated into Schaffer's existing valve structures with a reasonable expectation of success.

Regarding alleged obviousness, we suggest Petitioner, during the trial phase of this case, focus on those grounds (i.e., Grounds 3–5) for which Petitioner provided more developed arguments and where, at least on this preliminary record, the combination of asserted prior art appears to disclose the subject matter of one or more of the challenged claims.

G. Obviousness over Schaffer and Hartley (Ground 3) or Schaffer and Eller (Ground 4)

Petitioner contends that claims 1–7, 9, 10, 15–18, and 20–24 would have been obvious over Schaffer and Hartley (Ground 3) or Schaffer and Eller (Ground 4). Pet. 21–47 (allegations related to claim 1), 47–75 (remaining challenged claims). The discussion above concerning whether the claims require a "flexible" filament and whether Schaffer discloses this subject matter is not decisive because there is no dispute that both Hartley and Eller disclose a "filament" within the scope of the claims. *See, e.g.*, *id.* at 33–39 (discussing Hartley's teaching of, *inter alia*, a flexible string that may be wrapped around seal module of the modified Schaffer valve), 40–46 (same with respect to Eller's wire); *see, e.g.*, Prelim. Resp. 35–68 (arguing

---

[14] Although not the basis for our decision here given the Petition's filing date (before September 1, 2025), the Office's updated policy on enforcement of Rule 104(b)(4) is plain—"general knowledge" comprising expert testimony, common sense, or other evidence that is not prior art patents or publications "may not be used to supply a missing claim limitation" in IPR proceedings. Enforcement and Non-Waiver of 37 C.F.R. § 42.104(B)(4) and Permissible Uses of General Knowledge in Inter Partes Reviews, issued July 31, 2025, *available at* www.uspto.gov/sites/default/files/documents/aapa_memo_final__signed.pdf.

against Petitioner's proffered reasons for combining the prior art, but not identifying a limitation that is missing in the combination of Schaffer with Hartley or Eller).

Our discussion below focuses on Petitioner's challenge to claim 1 as illustrative. We also focus primarily on the Shaffer/Hartley combination because the parties' arguments under Grounds 3 and 4 substantially overlap.

Petitioner argues Schaffer teaches or suggests a hemostasis valve of claim 1 comprising, *inter alia*, an actuator that allows the valve to move from a first (closed or sealed) position to a second (open or unsealed) position. Pet. 26–29 (citing, e.g., Schaffer's actuator buttons on opposite sides of the valve housing; Ex. 1005 ¶¶ 75–77, Figs. 31–32). Petitioner further argues that Schaffer discloses a "biasing member" as claimed, which comprises Schaffer's two resilient members or "springs" that bias Schaffer's actuator buttons to the first (closed) position. *Id.* at 46–47 (citing Ex. 1005 ¶ 76, Fig. 31; Ex. 1003 ¶¶ 107–109). Petitioner, citing Hartley's flexible string as a "filament," argues that it would have been obvious to substitute Hartley's string for Schaffer's two U-shaped actuating members and, therefore, meet claim 1's recited active tensioning mechanism comprising a "filament." *Id.* at 33–39 (citing, e.g., Ex. 1006 ¶¶ 31, 34, 37, Figs. 1–4).

The image below illustrates Petitioner's proposed combination of Schaffer and Hartley.

Demonstrative Illustration
Schaffer + Hartley's String

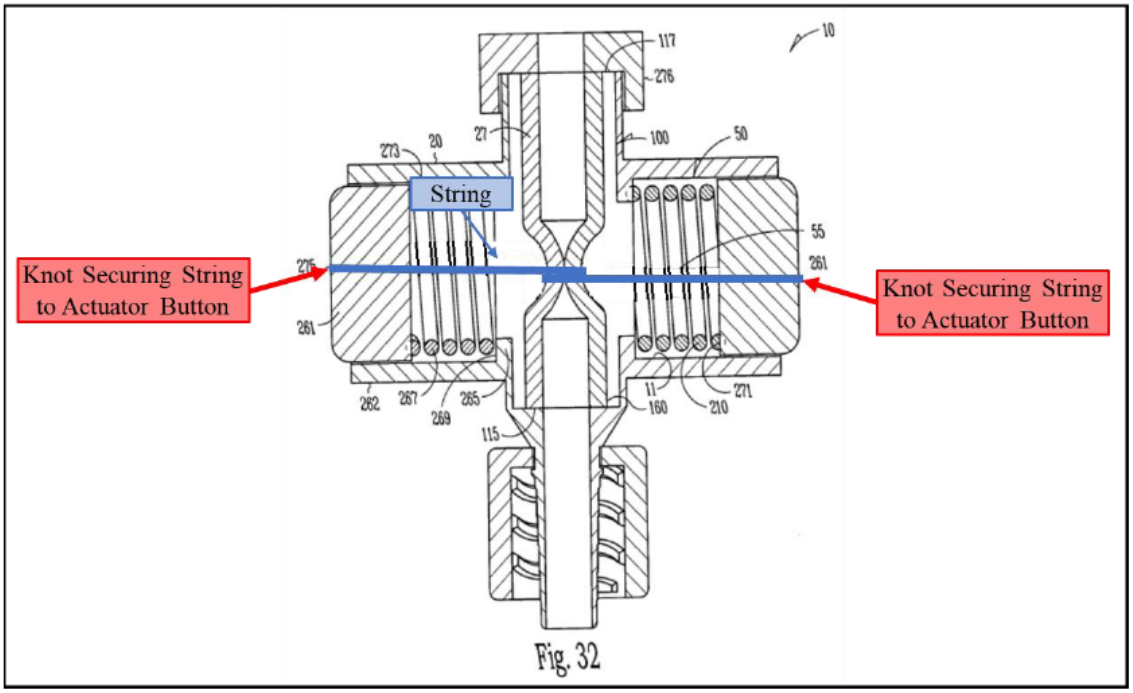

Pet. 37–38 (Petitioner's annotated/modified version of Schaffer's Figure 32). The above image shows Schaffer's valve in cross section (from Schaffer's Figure 32) modified to replace Schaffer's actuating members with Hartley's flexible string (blue highlight), which wraps around the outer wall of a central portion of seal module 100. *Id.* (citing Ex. 1003 ¶¶ 89–94; Ex. 1006 ¶ 31). Petitioner contends that, by a "simple" technique taught in Hartley, a POSA would have been able to attach the string's ends (e.g., by knots) to the respective actuator buttons of Schaffer (red highlights). *Id.*

Petitioner contends that a POSA would have found it obvious to substitute Hartley's string for Schaffer's actuating members, arguing, *inter alia*, that such modification entails substitution of one known element (Hartley's string) for another (Schaffer's actuating members) to yield the predictable result of constricting Schaffer's valve to form a seal. Pet. 35–36.

According to Petitioner, a POSA would have recognized that Hartley's string "may seal more effectively across a wider range of tool diameters and shapes than Schaffer's U-shaped actuating members." *Id.* at 36 (citing, e.g., Ex. 1003 ¶¶ 85–86). Petitioner contends that, depending on the diameter and shape of the inserted tool, "Schaffer's actuating members may form small gaps between the valve's seal module and the tool's outer surface." *Id.* (depicting "gaps" and arguing "Hartley's string could improve upon this potential issue because the string more precisely conforms to the tool diameters and shapes"); Ex. 1006 ¶ 37 (teaching that Hartley's string can "close over a range of diameters of devices passed through the valve or can close completely down to be self-sealing"); *see also* Pet. 37 (arguing a "finite number of materials to use for constricting a tubular member in a hemostasis valve in 2017" (citing Ex. 1003 ¶ 88)).

Petitioner's evidence supports a preliminary determination that a POSA would have regarded the proposed change as involving a reasonably straightforward substitution of a known, alternative feature for constricting a hemostasis valve lumen and avoiding leaks. That it may have taken some creativity to carry out the combination (e.g., connecting the string to two as opposed to one movable actuator as in Hartley) does not necessarily defeat a finding of obviousness. *Facebook, Inc. v. Windy City Innovations, LLC*, 973 F.3d 1321, 1343 (Fed. Cir. 2020) (recognizing that the ordinary "creativity" exhibited by a POSA is part of the obviousness analysis); Ex. 1003 ¶¶ 83, 90–91 (testifying about how Hartley teaches fixing the string by knots to an actuator to allow the string to be pulled in substantially opposite directions for sealing of the valve, and how this fixation technique could be applied to Schaffer's buttons allowing the string to compress and seal the central lumen when pulled by spring-activated buttons).

Patent Owner makes several counterarguments. According to Patent Owner, the POSA would not have been motivated to combine Schaffer and Hartley as proposed because the fluid "gaps" imagined by Petitioner do not, in fact, exist with Schaffer's valves. Prelim. Resp. 38–46 (asserting that Schaffer's valves use rigid actuating members and a highly-compliant seal member that together provide gap-free sealing). Patent Owner argues that the substitution proposed by Petitioner is not "simple" and a POSA would have understood, from Schaffer itself, that more plausible and effective options were available for complete sealing in a hemostasis valve. *Id.* at 55–60 (arguing a string would lack efficacy if trying to seal around multiple instruments/tools inserted into the lumen, and a string adds unpredictability). Patent Owner argues that Petitioner's putative "obvious-to-try" reasoning should be rejected because Petitioner has not shown that solutions for constricting a valve lumen were finite, identifiable, and known. *Id.* at 61–63. Lastly, Petitioner argues that Petitioner's modification impermissibly changes Schaffer's principle of operation. *Id.* at 63–68 (arguing Hartley's string would prevent "forcible disengagement" provided by Schaffer's actuating members, and result in a less durable valve that is harder to manufacture and assemble).

Patent Owner's arguments here parallel arguments raised in several related cases that remain pending. *See, e.g.*, IPR2024-01157, Paper 7 at 35–41 (summarizing and addressing Patent Owner's preliminary arguments concerning the modification of Schaffer's valve to include Hartley's string (or Eller's wire)); IPR2025-00289, Paper 10 at 36–45 (same). Like we explained there, the arguments against the reasons for combining Schaffer and Hartley (or Eller) are better resolved on a complete record developed through trial. We determine at this time, however, that Petitioner has made a

threshold showing, sufficient for institution, that the combination of Schaffer and Hartley discloses all the limitations of claim 1, and that a skilled artisan would have had reasons for combining those references as proposed with a reasonable expectation of success.

H. Obviousness over Hartley and Eller (Ground 5)

Petitioner argues that claims 1–3, 5, 6, 9, 15–18, and 21–24 would have been obvious over the combination of Hartley and Eller. Pet. 76–92; Ex. 1003 ¶¶ 174–219.

Summarizing Petitioner's challenge to claim 1 as illustrative, Petitioner contends that Hartley discloses a valve with all the limitations of claim 1 with the exception of a "biasing member configured to bias the actuator to the first position." Pet. 76–85. Petitioner contends, however, that a use of biasing members in hemostasis valves was well known in the art, and Petitioner proposes that it would have been obvious to modify Hartley's valve with Eller's biasing member (i.e., torsion spring). *Id.* at 76, 81–85 (citing Ex. 1007, 19:22–30). Petitioner argues, *inter alia*, that a POSA would have been motivated to make this modification to "ensure[] that Hartley's valve seals quickly when a device is removed through the valve, which minimizes blood loss," and to simplify operation of Hartley's valve and eliminate the need to manually seal the valve during procedures. *Id.* at 83–84 (citing Ex. 1003 ¶¶ 187–193); *see also id.* at 84–85 (arguing the POSA would have reasonably expected success because, for example, the valves of Hartley and Eller share many of the same features (e.g., rotational actuators, constricting string/wire, etc.)).

Patent Owner does not argue that any limitation from claim 1 (or the other challenged claims) is missing in the combination of Hartley and Eller. Prelim. Resp. 69–73. Patent Owner argues against the combination itself—

asserting that a POSA would not have been motivated to add Eller's torsion spring as a biasing member because it would allegedly "change Hartley's principle of operation by obviating [Hartley's] ball-and-detent system." *Id.* (citing Ex. 2024 ¶¶ 170–182).

Patent Owner's counterargument is unavailing on this preliminary record. The ball-and-detent system cited by Patent Owner appears to be an optional feature in Hartley. *See, e.g.*, Ex. 1006 ¶ 15 ("*Alternatively* the rotary actuator may be retained on the cylindrical housing by the ball and detent arrangement discussed in more detail below."), ¶ 18 ("The rotary actuator *may have* a tactile indication of its action by means of a ball or other device acting into detents . . . .") (emphases added). The argument that the ball-and-detent feature is required for Hartley's principle of operation is undercut if that feature is optional. Ex. 1003 ¶ 193 (testifying that "Hartley makes clear that the ball and detent are optional features" and that, even if the features remained in a modified valve of Hartley with Eller's spring, the ball and detent "would continue to provide 'tactile feedback' to the user as the user rotates the actuator to open valve" helping to indicate "how 'open' the valve is or how quickly the user is opening the valve").[15]

Moreover, when obviousness is the issue, the prior art is not limited to its preferred embodiments. *Merck & Co., Inc. v. Biocraft Labs., Inc.*, 874 F.2d 804, 807 (Fed. Cir. 1989). And Patent Owner's contention that the ball-and-detent feature, because it appears in a preferred embodiment, is not optional is at odds with Hartley's disclosures noted above. Prelim. Resp. 72

[15] Hartley's claims are consistent with other parts of Hartley's disclosure, suggesting the valve does not require a ball-and-detent feature. *Compare* Ex. 1006, independent claim 1 (no ball and detent), *with* dependent claim 12 ("including a ball and detent arrangement").

(citing Ex. 1006, Figs. 3–4, ¶ 33). Patent Owner cites no authority for the proposition that modifying a reference such that the modification omits or allegedly overrides aspects of a feature the reference identifies as *optional* leads to a conclusion of nonobviousness.

At this stage, we determine that Petitioner has shown that it is reasonably likely to succeed in establishing that at least claim 1 is unpatentable as obvious over Hartley and Eller.

IV. CONCLUSION

Based on this preliminary record, we determine that Petitioner has shown a reasonable likelihood that it will prevail with respect to at least one of the claims challenged in the Petition. We institute trial on all challenged claims under the grounds raised in the Petition. *PGS Geophysical AS v. Iancu*, 891 F.3d 1354, 1360 (Fed. Cir. 2018) (explaining that institution of *inter partes* review "require[s] a simple yes-or-no institution choice . . . embracing all challenges included in the petition"); 37 C.F.R. § 42.108(a).

Any argument not raised in a Patent Owner Response to the Petition, or as permitted in another manner during trial, shall be deemed forfeited and/or waived even if asserted in the Preliminary Response. *In re Google Tech. Holdings LLC*, 980 F.3d 858, 862–864 (Fed. Cir. 2020) (holding an argument forfeited when not timely raised before the Board); *In re NuVasive, Inc.*, 842 F.3d 1376, 1380–81 (Fed. Cir. 2016) (holding Patent Owner waived an argument addressed in the Preliminary Response by not raising the same argument in the Patent Owner Response).

V. ORDER

In consideration of the foregoing, it is hereby:

ORDERED that, pursuant to 35 U.S.C. § 314(a), *inter partes* review of all challenged claims of the ’921 patent is instituted on the grounds of unpatentability set forth in the Petition; and

FURTHER ORDERED that, pursuant to 35 U.S.C. § 314(a) and 37 C.F.R. § 42.4, notice is given of institution of trial commencing on the entry date of this Decision.

FOR PETITIONER:

Joshua J. Stowell
Joseph R. Re
Brian C. Barnes
KNOBBE, MARTENS, OLSON & BEAR, LLP
Joshua.Stowell@knobbe.com
Joe.Re@knobbe.com
Brian.Barnes@knobbe.com

FOR PATENT OWNER:

Joseph Hamilton
Paul Parker
PERKINS COIE LLP
hamilton-ptab@perkinscoie.com
parker-ptab@perkinscoie.com