The Patent Trial and Appeal Board

Imperative Care, Inc.,
Petitioner,
v.
Inari Medical Inc.,
Patent Owner.

Case Nos. IPR2025-00728 (US11,844,921), 2025-00989 (US11,865,291)

Patent Owner Demonstratives

DEMONSTRATIVE EXHIBIT – NOT EVIDENCE

US11,844,921 ('921 Patent): Grounds and Challenged claims

Claims 8, 11-12, 19, 25-26 not challenged in Petition.

Ground 5: Hartley + Eller - claims 4, 7, 11-14, 19, 20, 24 not challenged.
Claim 10 listed but not substantively argued in Petition.

Grounds 1 and 2: Schaffer (102, 103)

Ground 3: Schaffer + Hartley

Ground 4: Schaffer + Eller

DEMONSTRATIVE EXHIBIT – NOT EVIDENCE

US11,865,291 ('291 Patent): Grounds and Challenged claims

Claims 9-11 and 20 not challenged in Petition.

Grounds 1 and 2: Schaffer (102, 103)

Ground 3: Schaffer + Hartley

Ground 4: Schaffer + Eller

Ground 5: Garrison + Schaffer

Ground 6: Garrison + Schaffer + Hartley

Ground 7: Garrison + Schaffer + Eller

DEMONSTRATIVE EXHIBIT – NOT EVIDENCE

’921 Patent, Claim 10

10. The valve of claim **1** wherein the actuator is a first actuator, wherein the filament is a first filament, wherein the biasing member is a first biasing member, and wherein the active tensioning mechanism further comprises:

a second actuator coupled to the elongate member via a second filament extending at least partially around the elongate member, wherein the second actuator is moveable between (a) a first position wherein the lumen is constricted and sealed and (b) a second position wherein the lumen is at least partially open; and

a second biasing member configured to bias the second actuator to the first position.

EX1001 (’005 Patent).

DEMONSTRATIVE EXHIBIT – NOT EVIDENCE

’921 Patent, Claims 11-14

11. The valve of claim **10** wherein the first filament has a first end portion coupled to the first actuator and a second end portion coupled to the first actuator, and wherein the second filament has a first end portion coupled to the second actuator and a second end portion coupled to the second actuator.

12. The valve of claim **11** wherein the first filament and the second filament at least partially overlap to define a constricting region about the elongate member.

13. The valve of claim **12** wherein, when the second actuator is moved to the second position and/or the second actuator is moved to the second position, a size of the constricting region increases.

14. The valve of claim **10** wherein the first filament extends in a loop around the elongate member, and wherein the second filament extends through the loop of the first filament around the elongate member.

EX1001 (’921 Patent).

DEMONSTRATIVE EXHIBIT – NOT EVIDENCE

’921 Patent, Filament

stainless steel, nitinol, silicone, or the like. In some embodiments, the filament can comprise a single strand such as, for example, a monofilament, and in some embodiments, the filament can comprise a plurality of strands that can be, for example, twisted, woven, grouped, and/or fused to form the filament. In some embodiments, the filament **150** can comprise one or several threads, lines, cords, rope, ribbon, flat wire, sheet, or tape.

With reference now to FIGS. **6** through **9**, different embodiments and/or configurations of the filament **150** are shown. The filament **150** can comprise a single filament **150** having a first end **600** and a second end **602** as shown in FIG. **6**. The filament **150**, and specifically which first and second

In some embodiments, the filament **150** can comprise multiple filaments, and specifically, as shown in FIGS. **7** through **9**, the filament **150** can comprise a first filament **150**-A and a second filament **150**-B. In embodiments in

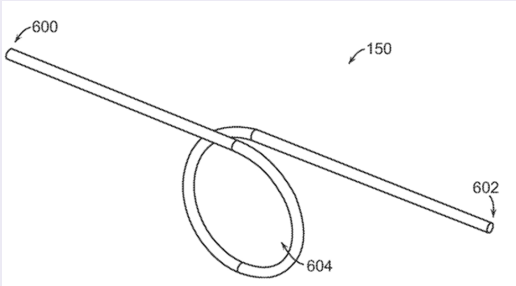

FIG. 6

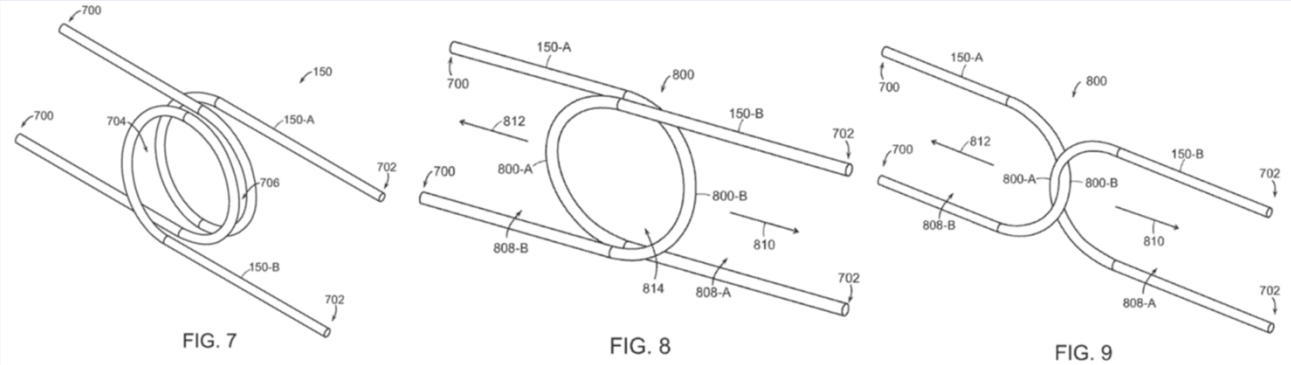

FIG. 7 FIG. 8 FIG. 9

EX1001 (’921Patent) 9:10-17, 12:37-41; 12:54-57.

PO Sur-Reply, 11-12.

DEMONSTRATIVE EXHIBIT – NOT EVIDENCE

Petitioner's purported motivation

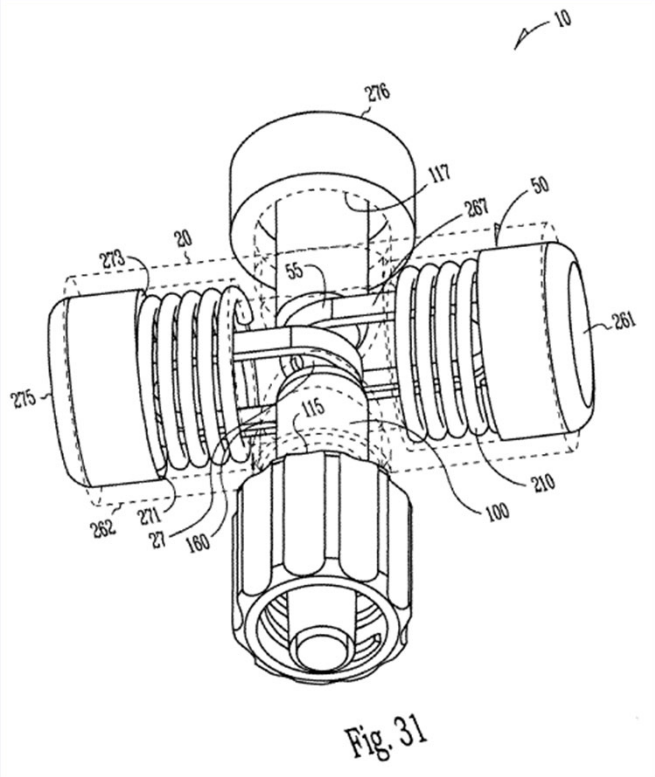

EX1008 (Schaffer).

are "rigid." (Ex. 1003, ¶81; Ex. 1014, ¶34.) Gaps will form if the members are rigid, but they will also form if the members are flexible because each U-shaped actuating member is secured to the actuator buttons at two fixed, spaced-apart points:

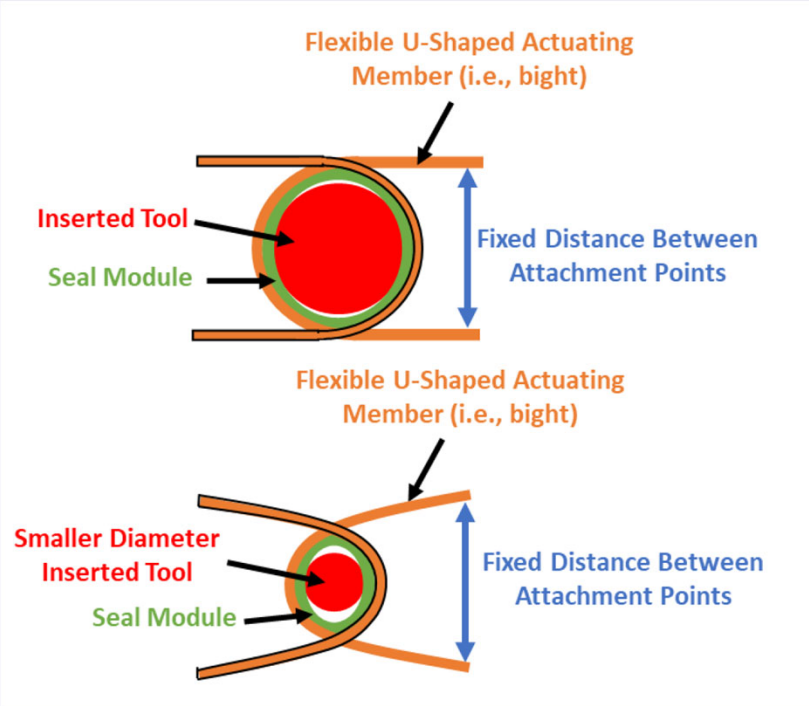

IPR2024-01157, Paper 18, 23-24.

PO Sur-Reply, 17.

DEMONSTRATIVE EXHIBIT – NOT EVIDENCE

’921 Patent, Claim 10

10. The valve of claim **1** wherein the actuator is a first actuator, wherein the filament is a first filament, wherein the biasing member is a first biasing member, and wherein the active tensioning mechanism further comprises:

a second actuator coupled to the elongate member via a second filament extending at least partially around the elongate member, wherein the second actuator is moveable between (a) a first position wherein the lumen is constricted and sealed and (b) a second position wherein the lumen is at least partially open; and

a second biasing member configured to bias the second actuator to the first position.

EX1001 (’921 Patent).

DEMONSTRATIVE EXHIBIT – NOT EVIDENCE

’291 Patent, Claims 1, 18

1. A hemostasis valve, comprising:

a support;

an actuator having at least a first member movably coupled to the support;

a collapsible tubular sidewall defining a lumen carried by the support;

a filament formed in a loop around the tubular sidewall, the filament having at least a first end portion extending away from the loop to the first member; and

a spring configured to move the first member in a direction that pulls the first end portion away from the tubular sidewall, reducing a diameter of the lumen in response to reducing a diameter of the loop.

18. An aspiration catheter system, comprising:

an aspiration catheter defining a lumen and having a proximal end portion; and

a hemostasis valve comprising—

a support;

an actuator having at least a first member movably coupled to the support;

a collapsible tubular sidewall defining a lumen carried by the support, wherein the lumen of the tubular sidewall is selectively fluidly couplable to the lumen of the aspiration catheter;

a filament formed in a loop around the tubular sidewall, the filament having at least a first end portion extending away from the loop to the first member; and

a spring configured to move the first member in a direction that pulls the first end portion away from the tubular sidewall, reducing a diameter of the lumen in response to reducing a diameter of the loop to fluidly decouple the lumen of the tubular sidewall from the lumen of the aspiration catheter.

EX1001 (’291Patent).

DEMONSTRATIVE EXHIBIT – NOT EVIDENCE

’291 Patent, Claim 1

1. A hemostasis valve, comprising:

a support;

an actuator having at least a first member movably coupled to the support;

a collapsible tubular sidewall defining a lumen carried by the support;

a filament formed in a loop around the tubular sidewall, the filament having at least a first end portion extending away from the loop to the first member; and

a spring configured to move the first member in a direction that pulls the first end portion away from the tubular sidewall, reducing a diameter of the lumen in response to reducing a diameter of the loop.

2. The hemostasis valve of claim **1**, further comprising a second member movably coupled to the support.

9. The hemostasis valve of claim **1** wherein the spring is positioned between the first member and the support.

EX1001 (’291Patent).

DEMONSTRATIVE EXHIBIT – NOT EVIDENCE

’291 Patent, Specification

The housing **128** can further include one or several retention features **140**. The one or several retention features **140** of the housing can engage with and retain all or portions of the constricting mechanism **141** of the valve **104**. In some embodiments, the one or several retention features **140** of the housing **128** can retain the actuator **142** and/or can couple the actuator **142** to the housing **128**. The actuator **142** can comprise any desired type of actuator including, for example, a manual actuator and/or an automated actuator such as, for example, an electromechanical actuator including a solenoid-based actuator. In some embodiments, the actuator can comprise one or several buttons **144**, and specifically, as depicted in FIG. **1**, the actuator **142** can comprise a first button **144**-A and a second button **144**-B. Alternatively, and as depicted in FIG. **5**, the actuator **142** can comprise a single button **144**. In such an embodiment, the filament **150** can be coupled to the single button **144** and to a portion of the housing **128** such as, for example, to grip portion **500** of the housing **128** such that the movement of the single button **144** causes the sealing and/or opening of the elongate member **132** and of the valve **104**.

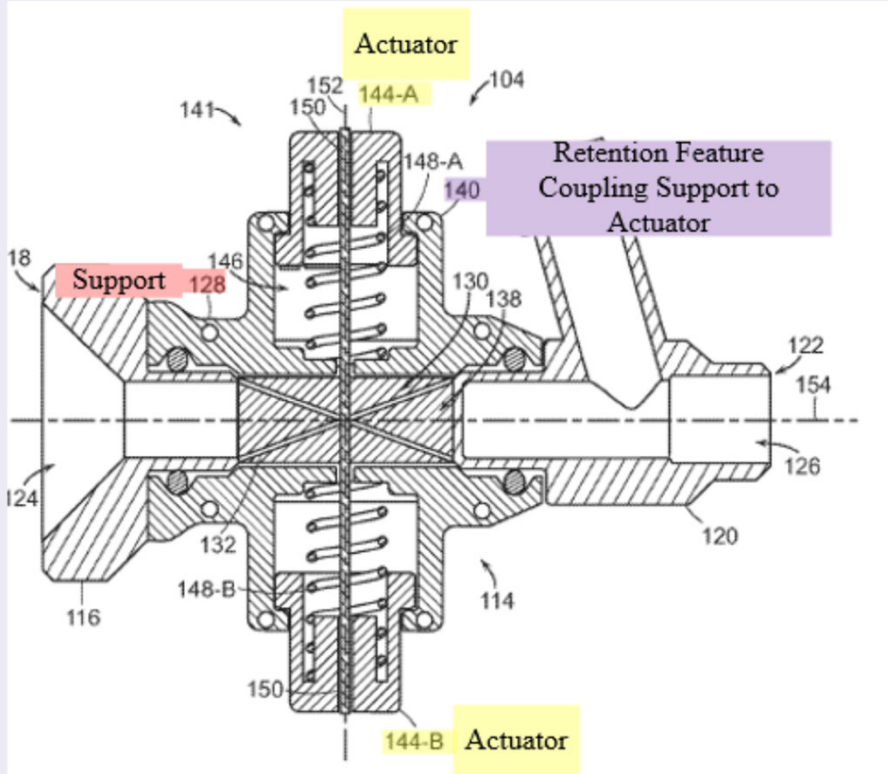

FIG. 2

EX1001 (’291Patent), 8:17-37, Fig. 2.

POR at 36-38.

DEMONSTRATIVE EXHIBIT – NOT EVIDENCE

’291 Patent, Specification

The housing **128** can further include one or several retention features **140**. The one or several retention features **140** of the housing can engage with and retain all or portions of the constricting mechanism **141** of the valve **104**. In some embodiments, the one or several retention features **140** of the housing **128** can retain the actuator **142** and/or can couple the actuator **142** to the housing **128**. The actuator **142** can comprise any desired type of actuator including, for example, a manual actuator and/or an automated actuator such as, for example, an electromechanical actuator including a solenoid-based actuator. In some embodiments, the actuator can comprise one or several buttons **144**, and specifically, as depicted in FIG. **1**, the actuator **142** can comprise a first button **144**-A and a second button **144**-B. Alternatively, and as depicted in FIG. **5**, the actuator **142** can comprise a single button **144**. In such an embodiment, the filament **150** can be coupled to the single button **144** and to a portion of the housing **128** such as, for example, to grip portion **500** of the housing **128** such that the movement of the single button **144** causes the sealing and/or opening of the elongate member **132** and of the valve **104**.

striction with at least one filament **150**. The constricting mechanism **141** can comprise: an actuator **142** which can be a manual actuator such as one or several buttons **144**; and the at least one filament **150** that can extend at least partially around the elongate member **132**. In some embodiments, the

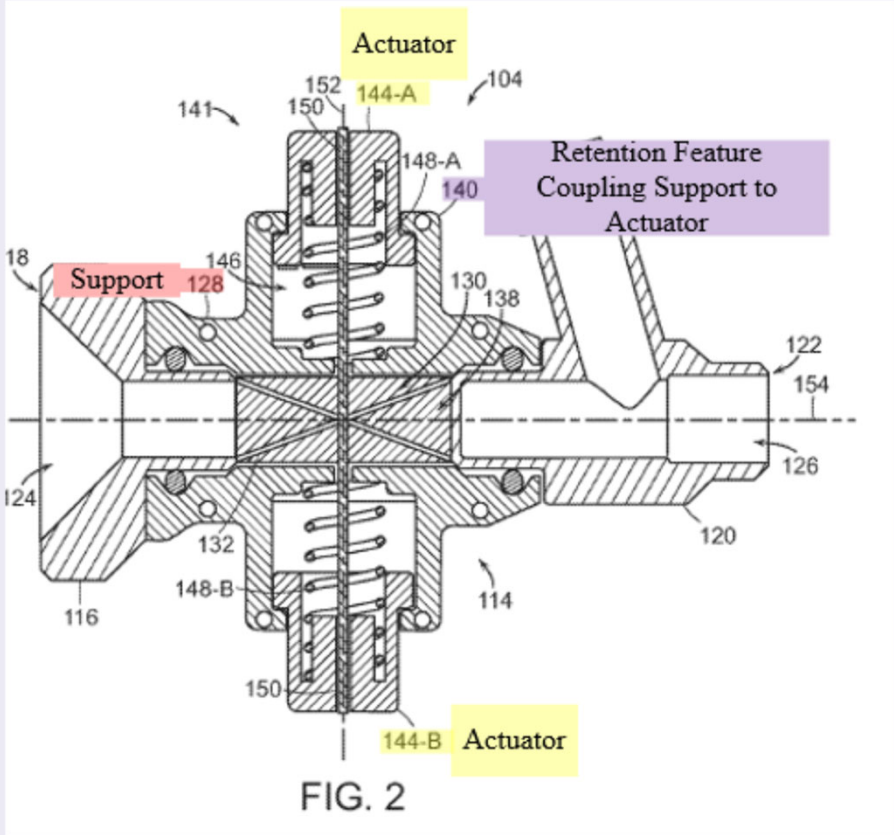

FIG. 2

EX1001 (’291Patent), 8:8-12; 8:17-37, Fig. 2.

POR at 36-38.

DEMONSTRATIVE EXHIBIT – NOT EVIDENCE

Schaffer does not disclose "member movable coupled to the support"

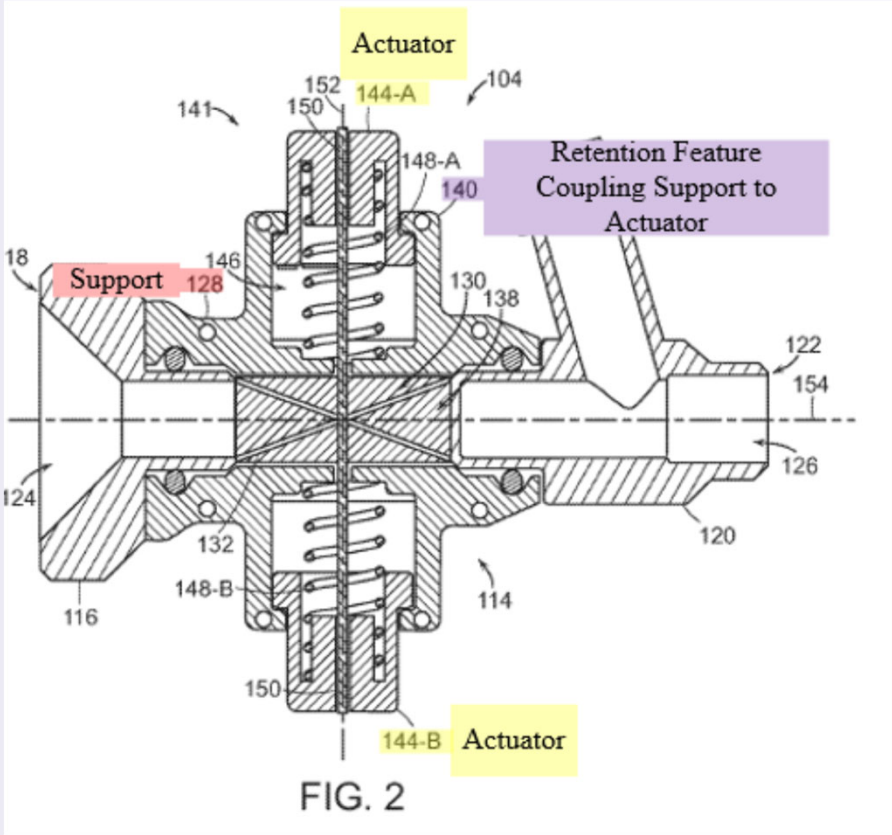

EX1001 ('291Patent).

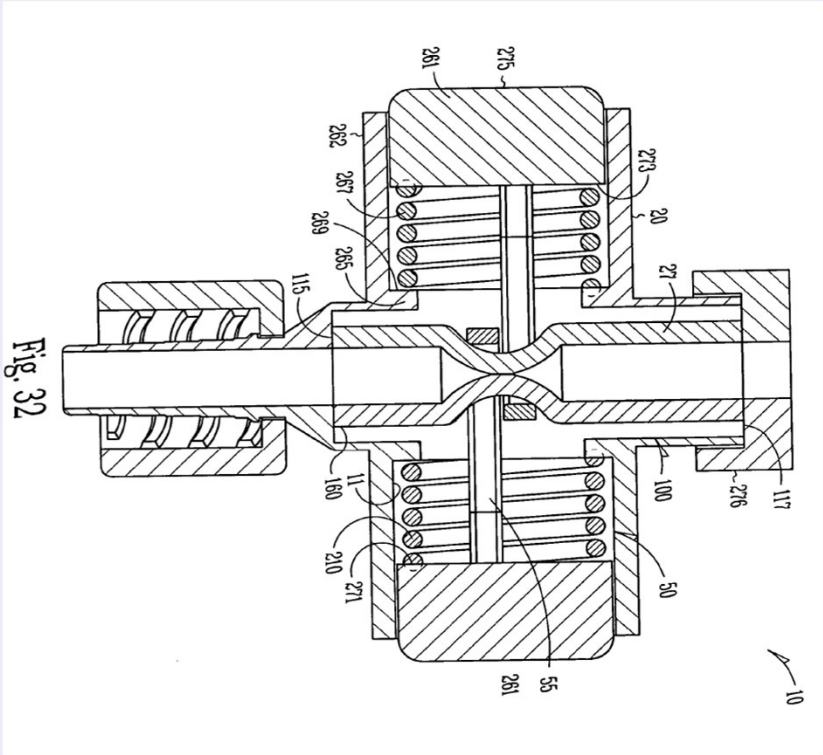

EX1008 (Schaffer FH), 82.

POR at 38.

DEMONSTRATIVE EXHIBIT – NOT EVIDENCE

Petitioner's expert's assertion regarding "member movable coupled to the support"

89. As shown in the figure above and described in Schaffer, the "actuators 50 are configured cylindrically to slide along the cylindrical interior wall 11 of the housing 20 from a first position to a second position." *Id.* at [0076], Figs. 32 and 34; *see also id.* at [0083] (the actuator button 261 is inserted into the housing during assembly). Therefore, the actuator buttons are movably coupled to the Schaffer's housing (the "support").

EX1003.

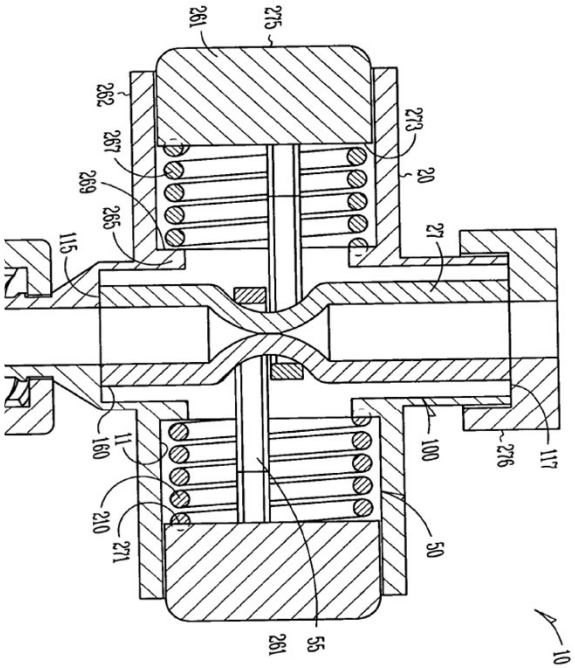

POR at 36-37.

DEMONSTRATIVE EXHIBIT – NOT EVIDENCE