US008090025B2

(12) **United States Patent**
Sakazume

(10) **Patent No.: US 8,090,025 B2**
(45) **Date of Patent: Jan. 3, 2012**

(54) **MOVING-PICTURE CODING APPARATUS, METHOD AND PROGRAM, AND MOVING-PICTURE DECODING APPARATUS, METHOD AND PROGRAM**

(75) Inventor: **Satoru Sakazume**, Kanagawa-Ken (JP)

(73) Assignee: **Victor Company of Japan, Ltd.**, Kanagawa-Ken (JP)

(*) Notice: Subject to any disclaimer, the term of this patent is extended or adjusted under 35 U.S.C. 154(b) by 1294 days.

(21) Appl. No.: **11/787,623**

(22) Filed: **Apr. 17, 2007**

(65) **Prior Publication Data**

US 2007/0268968 A1 Nov. 22, 2007

(30) **Foreign Application Priority Data**

Apr. 17, 2006 (JP) 2006-112995
Mar. 30, 2007 (JP) 2007-093162

(51) **Int. Cl.**
H04N 7/12 (2006.01)
H04N 11/04 (2006.01)

(52) **U.S. Cl.** **375/240.16**; 375/240.12; 375/240.13; 375/240.22; 375/240.23; 375/240.14; 375/240.01; 375/240; 382/238; 382/232; 348/394.1; 348/393.1; 348/384.1; 348/409.1; 348/410.1; 348/411.1; 348/415.1

(58) **Field of Classification Search** ..... None
See application file for complete search history.

(56) **References Cited**

U.S. PATENT DOCUMENTS

5,649,030 A * 7/1997 Normile et al. 382/253
(Continued)

FOREIGN PATENT DOCUMENTS

WO WO 03/003749 1/2003

OTHER PUBLICATIONS

Non-patent document "Improvement of DCT-based Compression Algorithms Using Poisson's Equation," Katsu Yamatani and Naoki Saito, Senior Member, IEEE, pp. 1-36, Sep. 12, 2005.

Primary Examiner — Syed A. Zia
(74) *Attorney, Agent, or Firm* — Renner, Kenner, Greive, Bobak, Taylor & Weber

(57) **ABSTRACT**

A residual picture is produced and encoded that is a residual picture that is a residual signal between a picture to be coded that is an input moving-picture video signal to be subjected to coding and a predictive picture produced from a reference picture that is a local decoded video signal for each of a plurality of rectangular zones, each composed of a specific number of pixels, into which a video area of the moving-picture video signal is divided. A boundary condition of each of a plurality of borders is obtained between the rectangular zones and another plurality of rectangular zones adjacent to the rectangular zones, and a border, of the reference picture, having a boundary condition that matches the boundary condition, is found by motion-vector search in the reference picture, and border motion-vector data is generated that is data on a motion vector from a border of the rectangular zone in the picture to be coded to the border of the reference picture thus found. A boundary condition of a border that corresponds to the border motion vector data is defined from the reference picture based on the border motion-vector data, and an estimated video signal is generated in each rectangular zone in the picture to be coded, that satisfies Poisson's Equation, thus producing a first predictive picture. The residual picture is then produced with the first predictive picture as the predictive picture and encodes the residual picture.

10 Claims, 20 Drawing Sheets

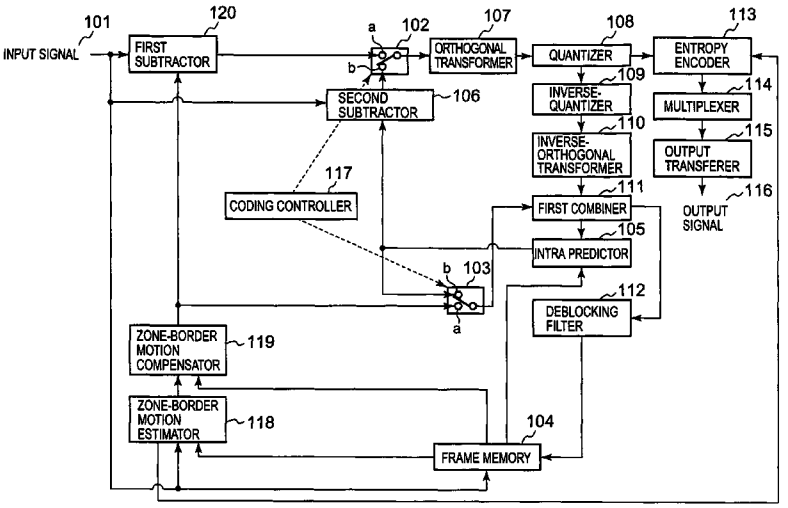

U.S. PATENT DOCUMENTS

5,822,465 A * 10/1998 Normile et al. 382/253
6,307,885 B1 * 10/2001 Moon et al. 375/240.08
6,337,925 B1 * 1/2002 Cohen et al. 382/199
6,853,683 B2 * 2/2005 Song et al. 375/240.25
7,027,507 B2 * 4/2006 Wu 375/240.03
7,158,713 B2 * 1/2007 Goto et al. 386/243
7,519,230 B2 * 4/2009 Wittebrood et al. 382/236
2005/0232357 A1 * 10/2005 Hubrich et al. 375/240.16
2009/0237503 A1 * 9/2009 Adiletta et al. 348/143
2011/0211108 A1 * 9/2011 Pollard 348/349
2011/0211642 A1 * 9/2011 Cho et al. 375/240.16

* cited by examiner

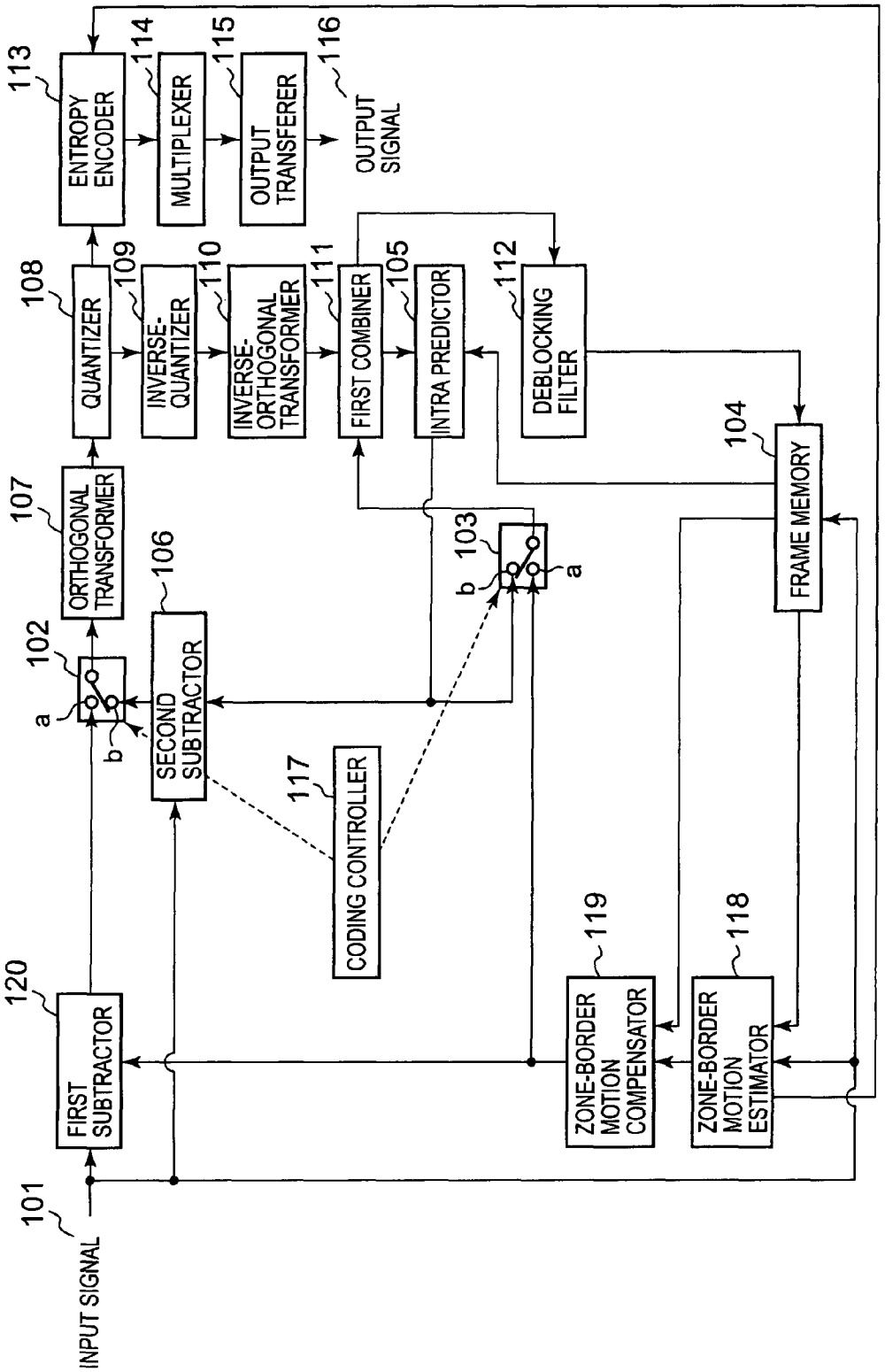
INPUT SIGNAL
101
FIRST SUBTRACTOR
120
a
b
102
ORTHOGONAL TRANSFORMER
107
SECOND SUBTRACTOR
106
QUANTIZER
108
INVERSE-QUANTIZER
109
INVERSE-ORTHOGONAL TRANSFORMER
110
FIRST COMBINER
111
INTRA PREDICTOR
105
DEBLOCKING FILTER
112
ENTROPY ENCODER
113
MULTIPLEXER
114
OUTPUT TRANSFERER
115
OUTPUT SIGNAL
116
CODING CONTROLLER
117
ZONE-BORDER MOTION ESTIMATOR
118
ZONE-BORDER MOTION COMPENSATOR
119
FRAME MEMORY
104
b
a
103

FIG. 1

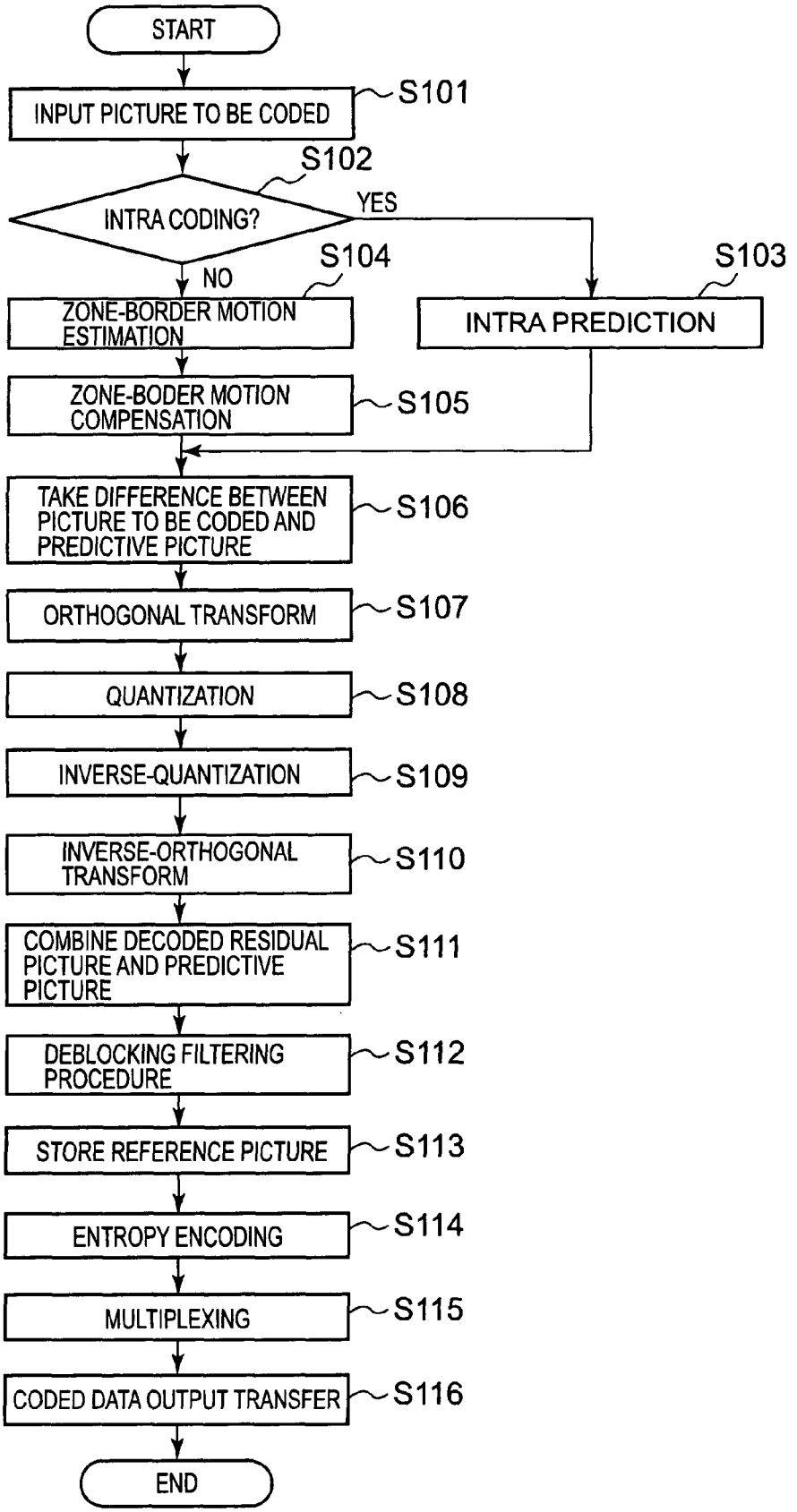
START
INPUT PICTURE TO BE CODED
S101
S102
INTRA CODING?
YES
NO
S104
S103
ZONE-BORDER MOTION ESTIMATION
INTRA PREDICTION
ZONE-BODER MOTION COMPENSATION
S105
TAKE DIFFERENCE BETWEEN PICTURE TO BE CODED AND PREDICTIVE PICTURE
S106
ORTHOGONAL TRANSFORM
S107
QUANTIZATION
S108
INVERSE-QUANTIZATION
S109
INVERSE-ORTHOGONAL TRANSFORM
S110
COMBINE DECODED RESIDUAL PICTURE AND PREDICTIVE PICTURE
S111
DEBLOCKING FILTERING PROCEDURE
S112
STORE REFERENCE PICTURE
S113
ENTROPY ENCODING
S114
MULTIPLEXING
S115
CODED DATA OUTPUT TRANSFER
S116
END

FIG. 2

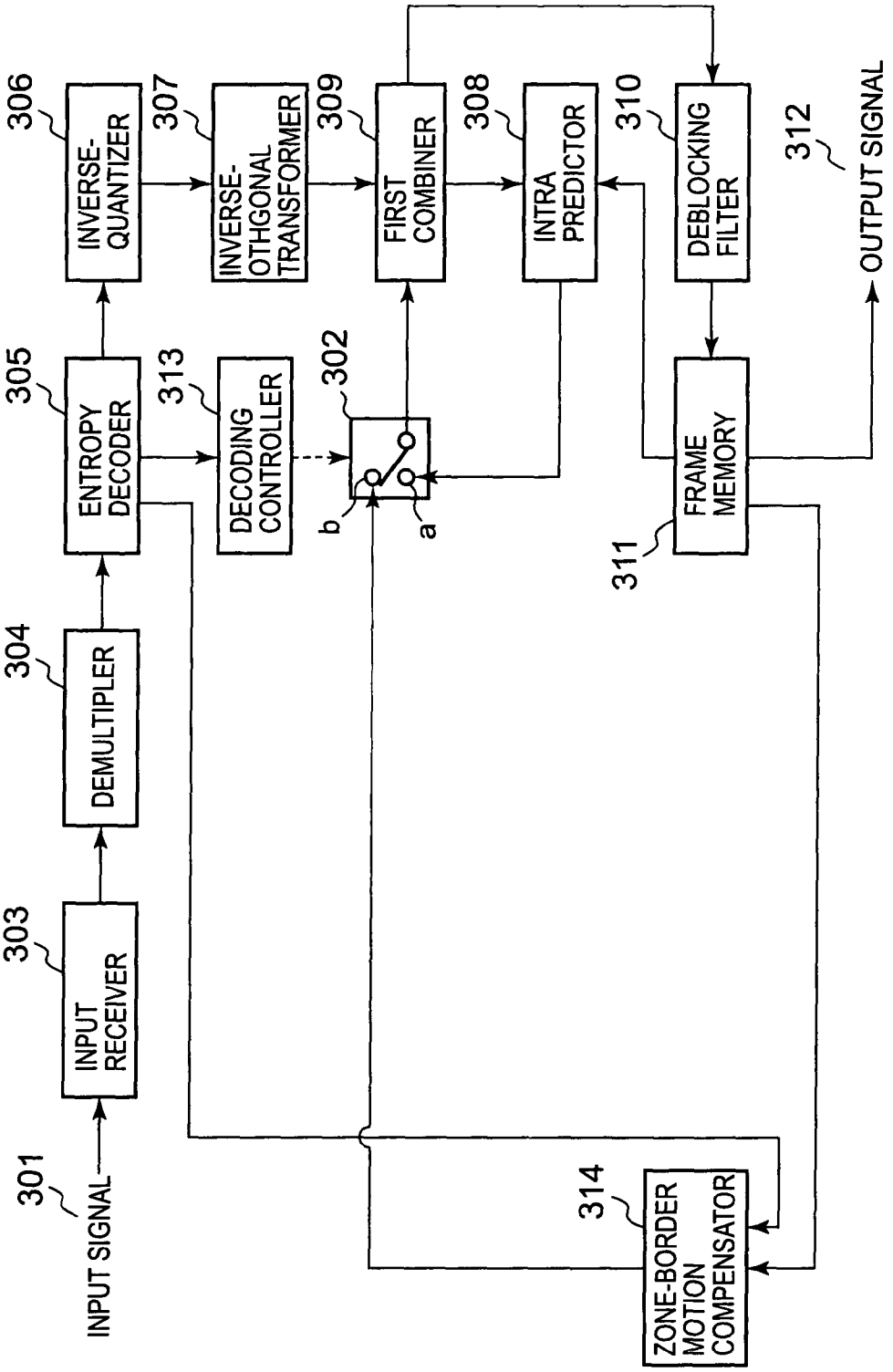
301
INPUT SIGNAL
303
INPUT RECEIVER
304
DEMULTIPLER
305
ENTROPY DECODER
306
INVERSE-QUANTIZER
307
INVERSE-OTHGONAL TRANSFORMER
309
FIRST COMBINER
308
INTRA PREDICTOR
310
DEBLOCKING FILTER
312
OUTPUT SIGNAL
313
DECODING CONTROLLER
302
b
a
311
FRAME MEMORY
314
ZONE-BORDER MOTION COMPENSATOR

FIG. 3

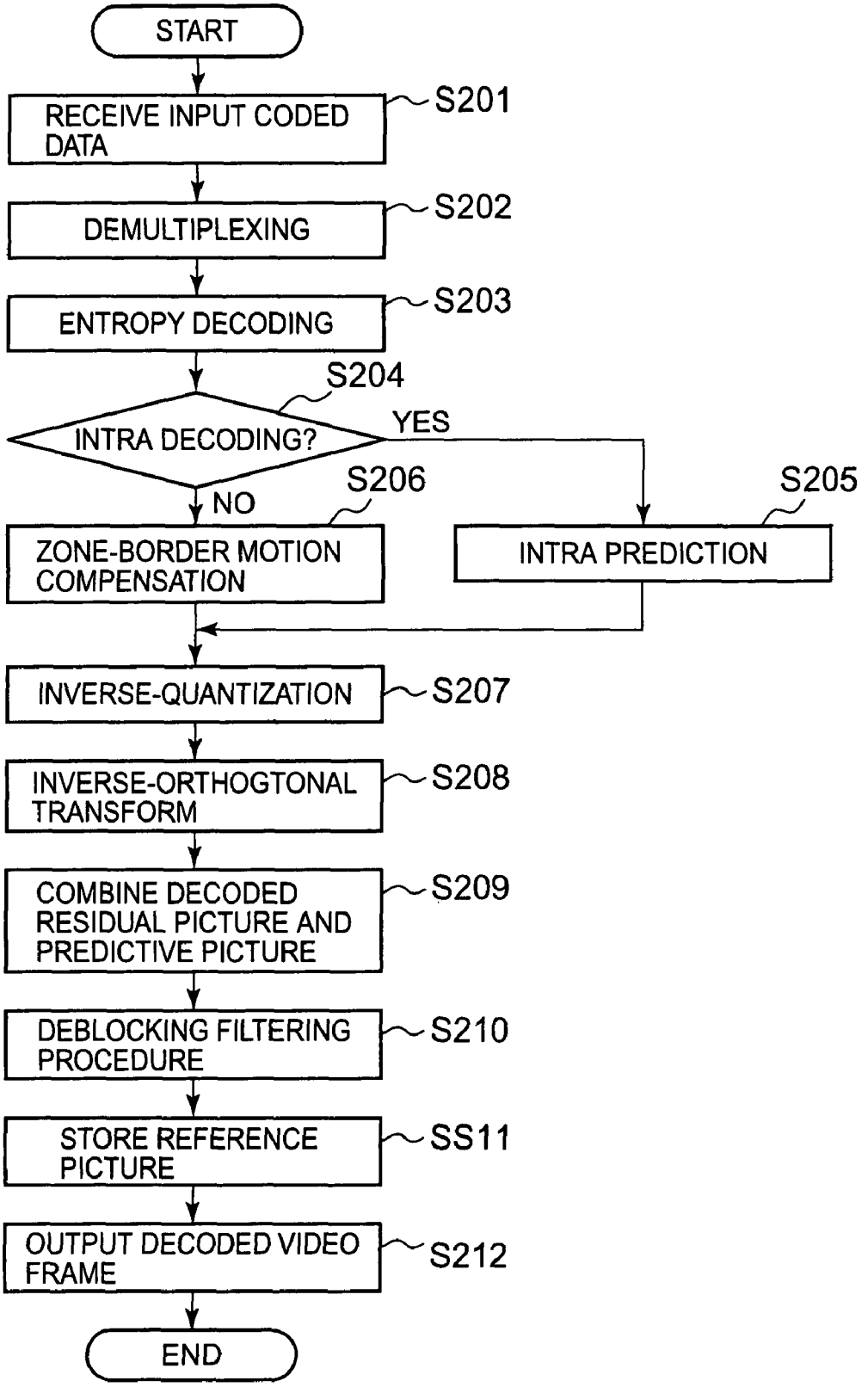
START
RECEIVE INPUT CODED DATA
S201
DEMULTIPLEXING
S202
ENTROPY DECODING
S203
S204
INTRA DECODING?
YES
NO
S206
S205
ZONE-BORDER MOTION COMPENSATION
INTRA PREDICTION
INVERSE-QUANTIZATION
S207
INVERSE-ORTHOGTONAL TRANSFORM
S208
COMBINE DECODED RESIDUAL PICTURE AND PREDICTIVE PICTURE
S209
DEBLOCKING FILTERING PROCEDURE
S210
STORE REFERENCE PICTURE
SS11
OUTPUT DECODED VIDEO FRAME
S212
END

FIG. 4

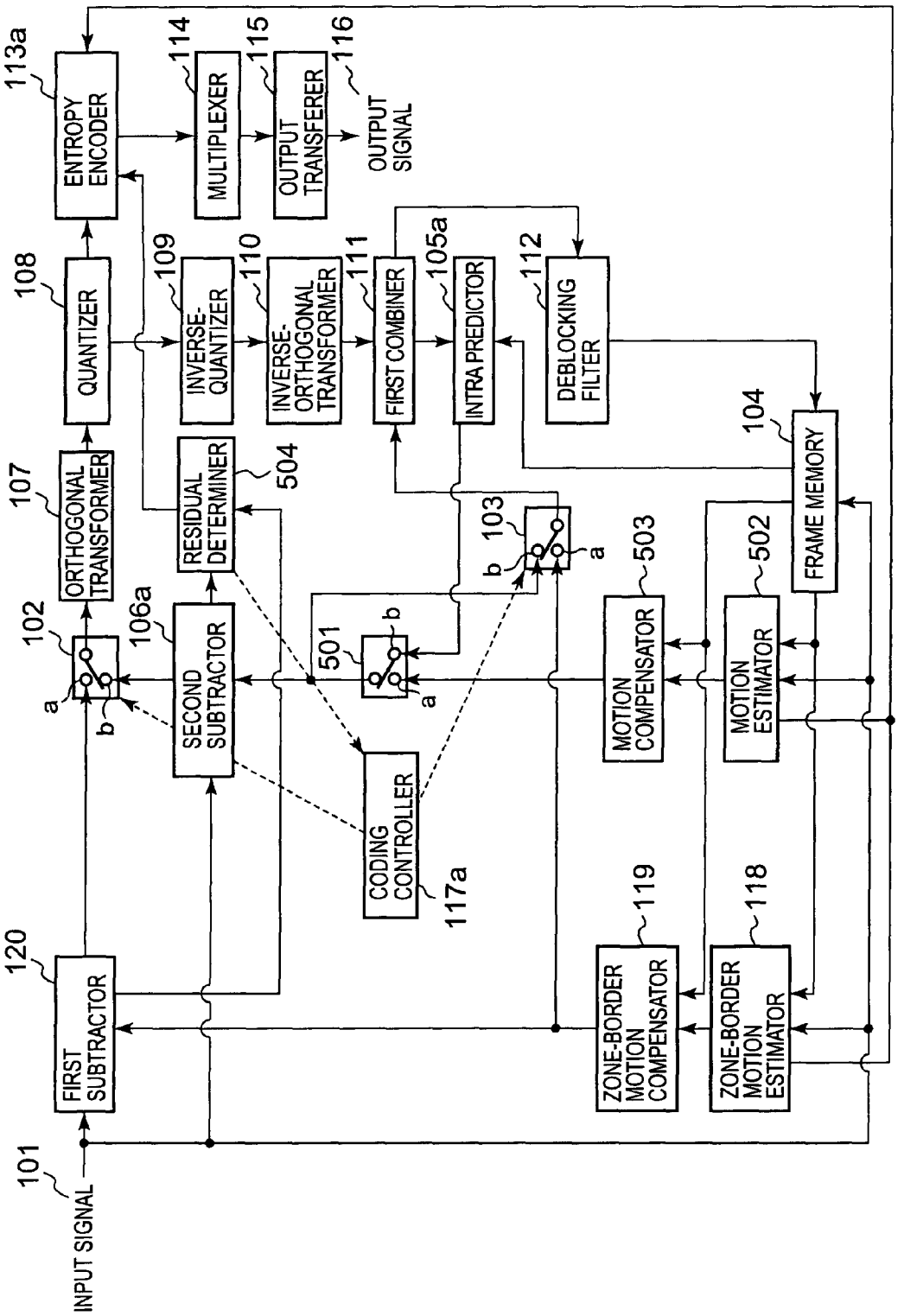
INPUT SIGNAL
101
FIRST SUBTRACTOR
120
ORTHOGONAL TRANSFORMER
107
QUANTIZER
108
ENTROPY ENCODER
113a
102
a
b
SECOND SUBTRACTOR
106a
RESIDUAL DETERMINER
504
INVERSE-QUANTIZER
109
INVERSE-ORTHOGONAL TRANSFORMER
110
FIRST COMBINER
111
INTRA PREDICTOR
105a
DEBLOCKING FILTER
112
MULTIPLEXER
114
OUTPUT TRANSFERER
115
OUTPUT SIGNAL
116
FRAME MEMORY
104
MOTION ESTIMATOR
502
MOTION COMPENSATOR
503
103
501
CODING CONTROLLER
117a
ZONE-BORDER MOTION ESTIMATOR
118
ZONE-BORDER MOTION COMPENSATOR
119

FIG. 5

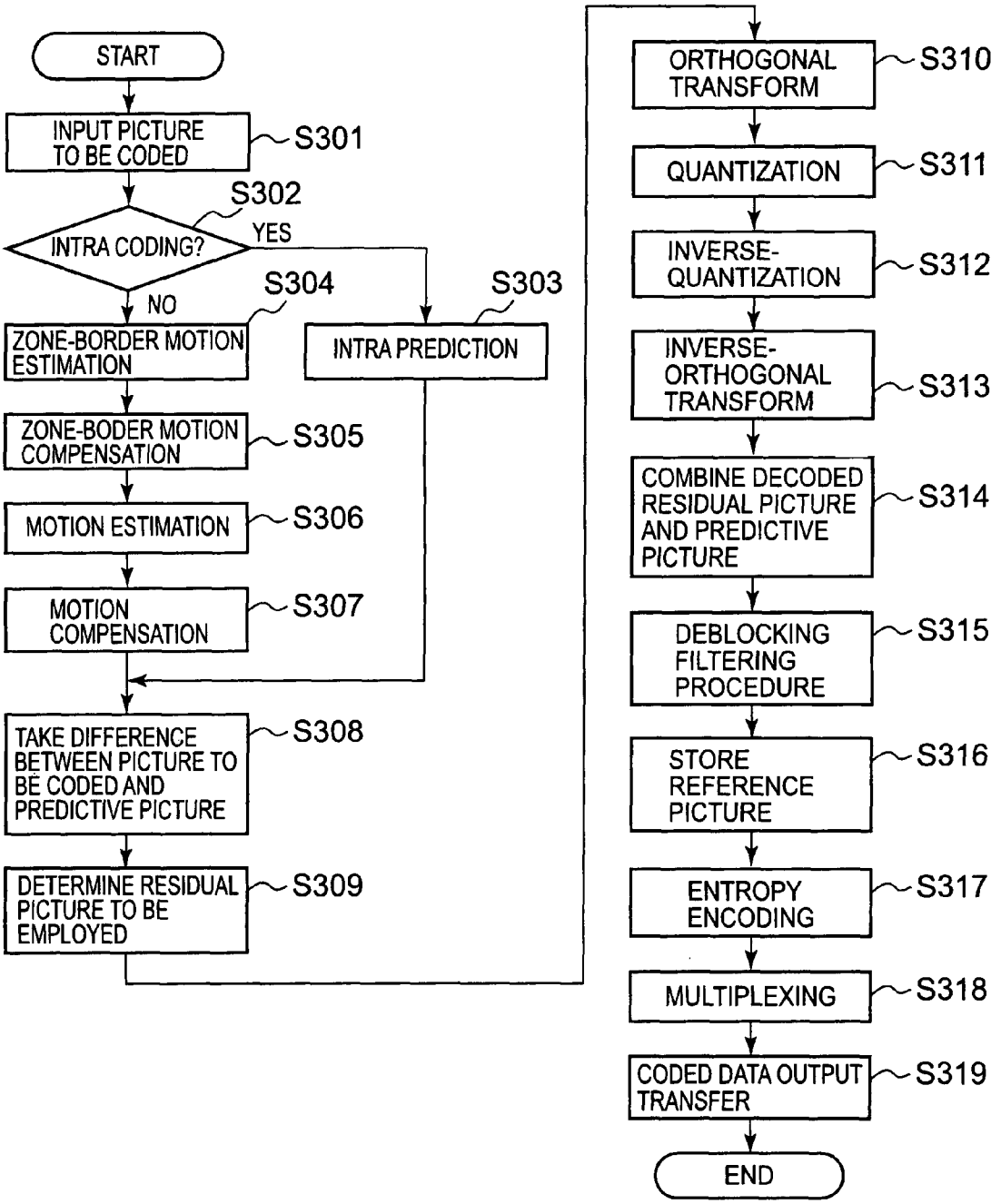
START
INPUT PICTURE TO BE CODED
S301
S302
INTRA CODING?
YES
NO
S304
S303
ZONE-BORDER MOTION ESTIMATION
INTRA PREDICTION
ZONE-BODER MOTION COMPENSATION
S305
MOTION ESTIMATION
S306
MOTION COMPENSATION
S307
TAKE DIFFERENCE BETWEEN PICTURE TO BE CODED AND PREDICTIVE PICTURE
S308
DETERMINE RESIDUAL PICTURE TO BE EMPLOYED
S309
ORTHOGONAL TRANSFORM
S310
QUANTIZATION
S311
INVERSE-QUANTIZATION
S312
INVERSE-ORTHOGONAL TRANSFORM
S313
COMBINE DECODED RESIDUAL PICTURE AND PREDICTIVE PICTURE
S314
DEBLOCKING FILTERING PROCEDURE
S315
STORE REFERENCE PICTURE
S316
ENTROPY ENCODING
S317
MULTIPLEXING
S318
CODED DATA OUTPUT TRANSFER
S319
END

FIG. 6

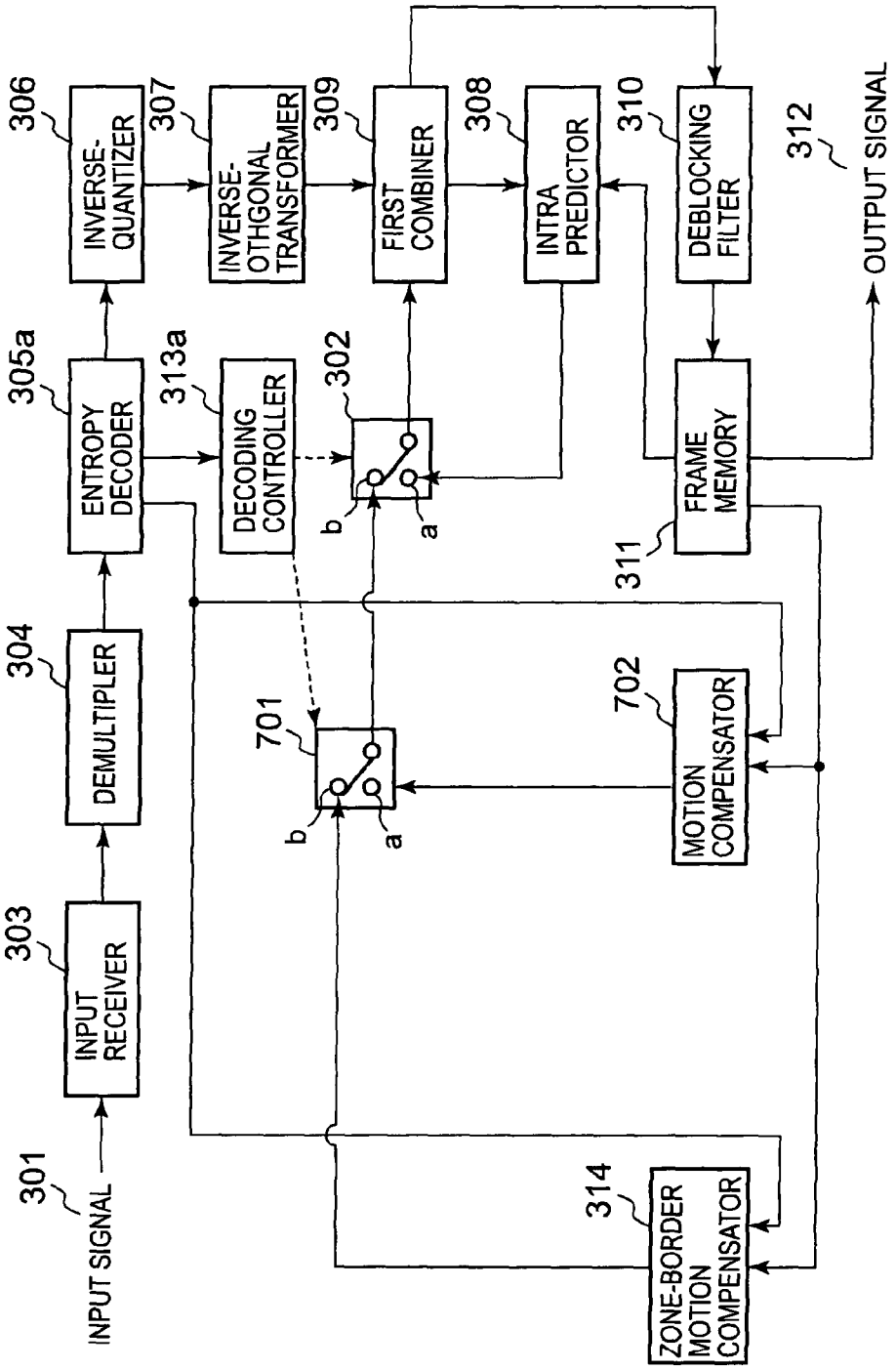
301
INPUT SIGNAL
303
INPUT RECEIVER
304
DEMULTIPLER
305a
ENTROPY DECODER
306
INVERSE-QUANTIZER
307
INVERSE-OTHGONAL TRANSFORMER
309
FIRST COMBINER
308
INTRA PREDICTOR
310
DEBLOCKING FILTER
312
OUTPUT SIGNAL
313a
DECODING CONTROLLER
302
b
a
701
b
a
702
MOTION COMPENSATOR
311
FRAME MEMORY
314
ZONE-BORDER MOTION COMPENSATOR

FIG. 7

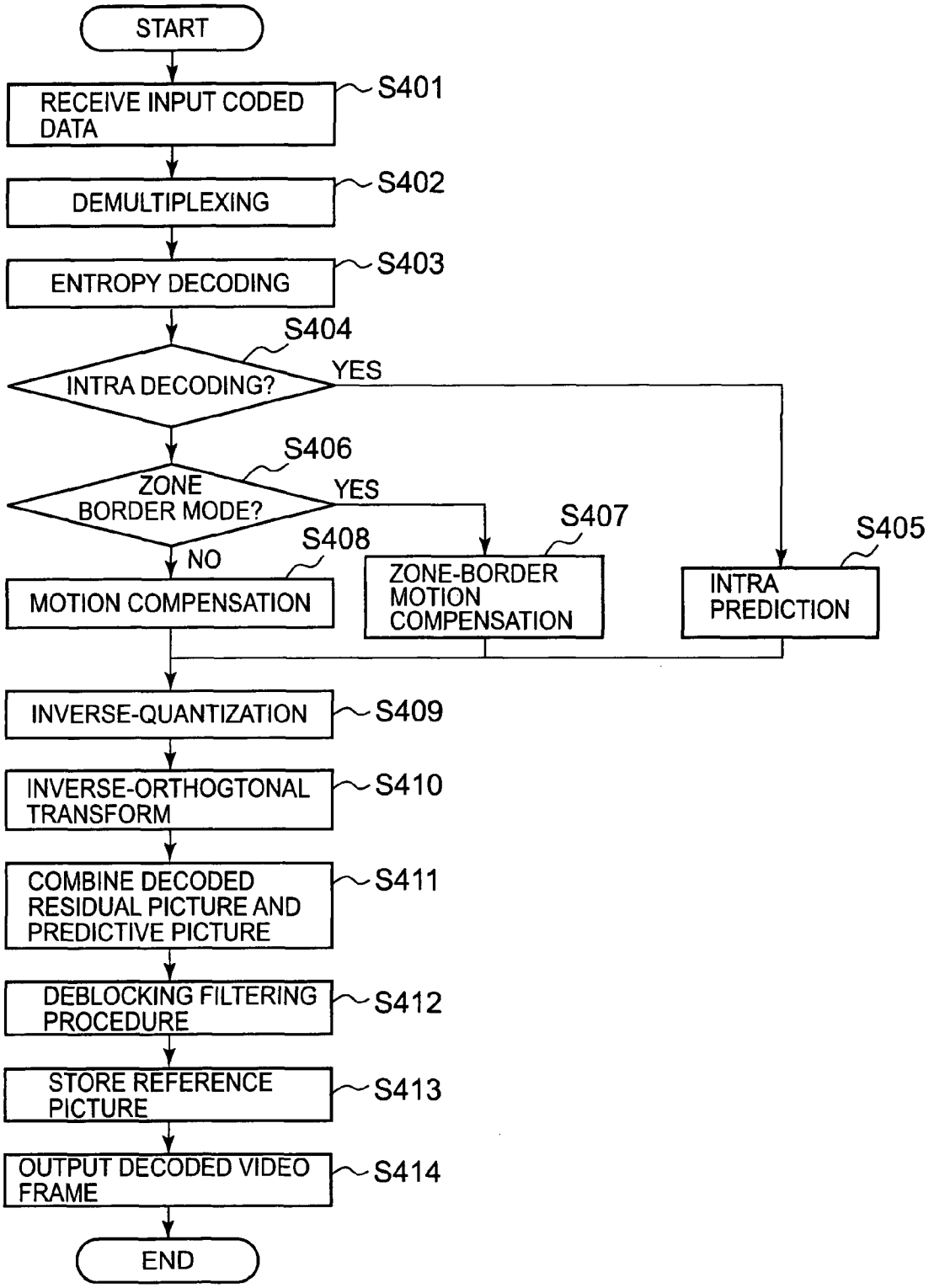
START
RECEIVE INPUT CODED DATA
S401
DEMULTIPLEXING
S402
ENTROPY DECODING
S403
S404
INTRA DECODING?
YES
S406
ZONE BORDER MODE?
YES
S407
S408
NO
S405
MOTION COMPENSATION
ZONE-BORDER MOTION COMPENSATION
INTRA PREDICTION
INVERSE-QUANTIZATION
S409
INVERSE-ORTHOGTONAL TRANSFORM
S410
COMBINE DECODED RESIDUAL PICTURE AND PREDICTIVE PICTURE
S411
DEBLOCKING FILTERING PROCEDURE
S412
STORE REFERENCE PICTURE
S413
OUTPUT DECODED VIDEO FRAME
S414
END

FIG. 8

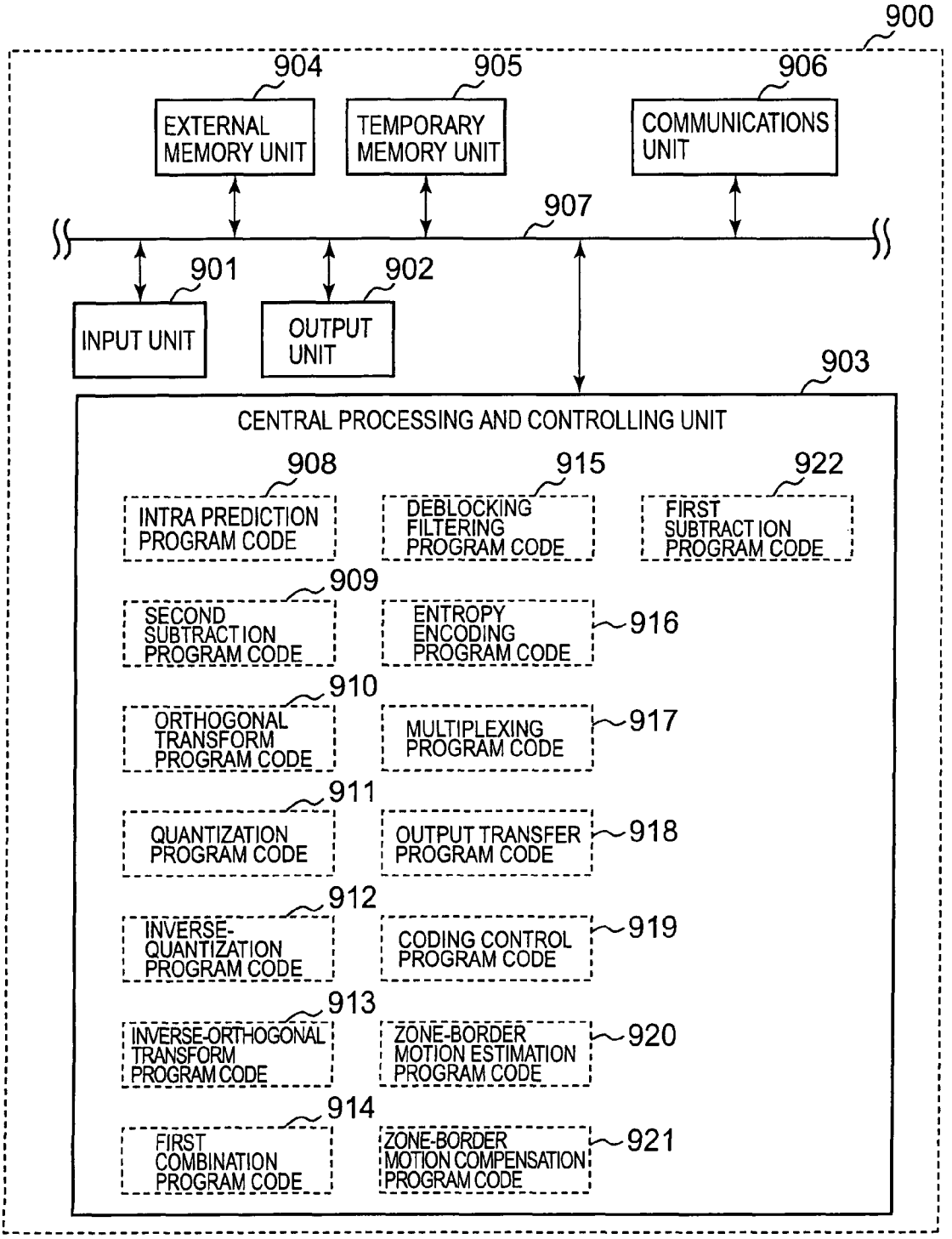
900
904
EXTERNAL MEMORY UNIT
905
TEMPORARY MEMORY UNIT
906
COMMUNICATIONS UNIT
907
901
INPUT UNIT
902
OUTPUT UNIT
903
CENTRAL PROCESSING AND CONTROLLING UNIT
908
INTRA PREDICTION PROGRAM CODE
915
DEBLOCKING FILTERING PROGRAM CODE
922
FIRST SUBTRACTION PROGRAM CODE
909
SECOND SUBTRACTION PROGRAM CODE
ENTROPY ENCODING PROGRAM CODE
916
910
ORTHOGONAL TRANSFORM PROGRAM CODE
MULTIPLEXING PROGRAM CODE
917
911
QUANTIZATION PROGRAM CODE
OUTPUT TRANSFER PROGRAM CODE
918
912
INVERSE-QUANTIZATION PROGRAM CODE
CODING CONTROL PROGRAM CODE
919
913
INVERSE-ORTHOGONAL TRANSFORM PROGRAM CODE
ZONE-BORDER MOTION ESTIMATION PROGRAM CODE
920
914
FIRST COMBINATION PROGRAM CODE
ZONE-BORDER MOTION COMPENSATION PROGRAM CODE
921

FIG. 9

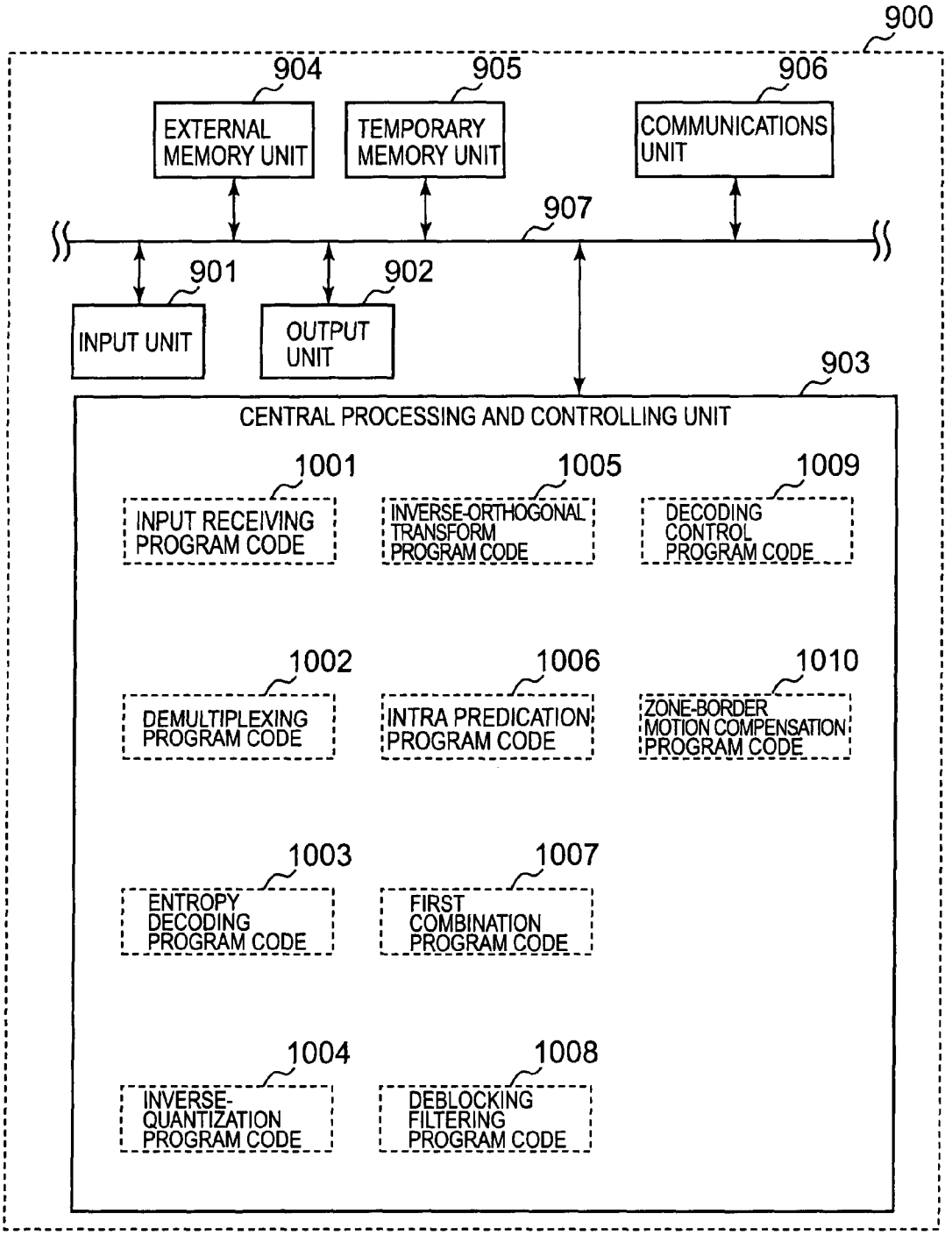
900
904
EXTERNAL MEMORY UNIT
905
TEMPORARY MEMORY UNIT
906
COMMUNICATIONS UNIT
907
901
INPUT UNIT
902
OUTPUT UNIT
903
CENTRAL PROCESSING AND CONTROLLING UNIT
1001
INPUT RECEIVING PROGRAM CODE
1005
INVERSE-ORTHOGONAL TRANSFORM PROGRAM CODE
1009
DECODING CONTROL PROGRAM CODE
1002
DEMULTIPLEXING PROGRAM CODE
1006
INTRA PREDICATION PROGRAM CODE
1010
ZONE-BORDER MOTION COMPENSATION PROGRAM CODE
1003
ENTROPY DECODING PROGRAM CODE
1007
FIRST COMBINATION PROGRAM CODE
1004
INVERSE-QUANTIZATION PROGRAM CODE
1008
DEBLOCKING FILTERING PROGRAM CODE

FIG. 10

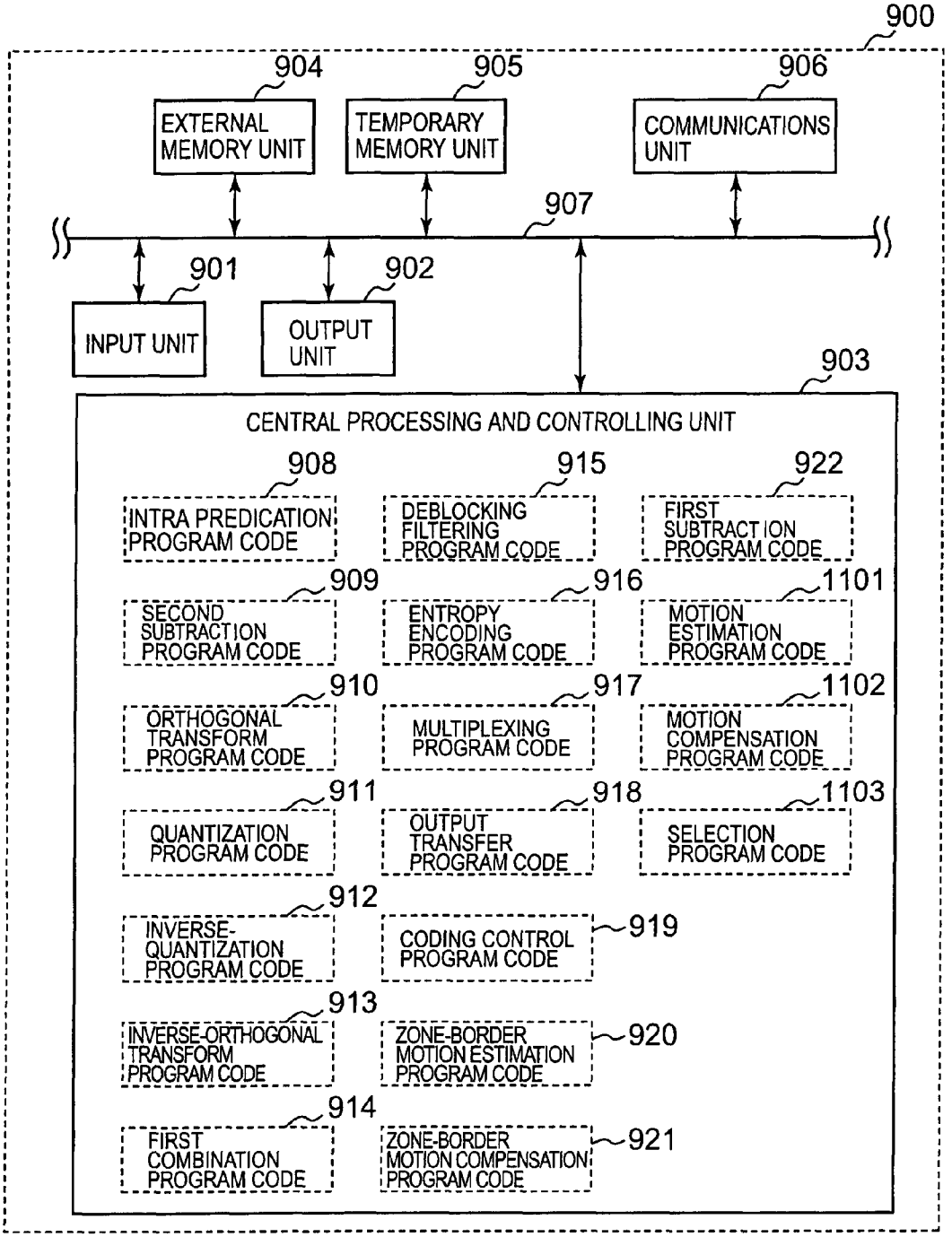
900
904
EXTERNAL MEMORY UNIT
905
TEMPORARY MEMORY UNIT
906
COMMUNICATIONS UNIT
907
901
INPUT UNIT
902
OUTPUT UNIT
903
CENTRAL PROCESSING AND CONTROLLING UNIT
908
INTRA PREDICATION PROGRAM CODE
915
DEBLOCKING FILTERING PROGRAM CODE
922
FIRST SUBTRACTION PROGRAM CODE
909
SECOND SUBTRACTION PROGRAM CODE
916
ENTROPY ENCODING PROGRAM CODE
1101
MOTION ESTIMATION PROGRAM CODE
910
ORTHOGONAL TRANSFORM PROGRAM CODE
917
MULTIPLEXING PROGRAM CODE
1102
MOTION COMPENSATION PROGRAM CODE
911
QUANTIZATION PROGRAM CODE
918
OUTPUT TRANSFER PROGRAM CODE
1103
SELECTION PROGRAM CODE
912
INVERSE-QUANTIZATION PROGRAM CODE
919
CODING CONTROL PROGRAM CODE
913
INVERSE-ORTHOGONAL TRANSFORM PROGRAM CODE
920
ZONE-BORDER MOTION ESTIMATION PROGRAM CODE
914
FIRST COMBINATION PROGRAM CODE
921
ZONE-BORDER MOTION COMPENSATION PROGRAM CODE

FIG. 11

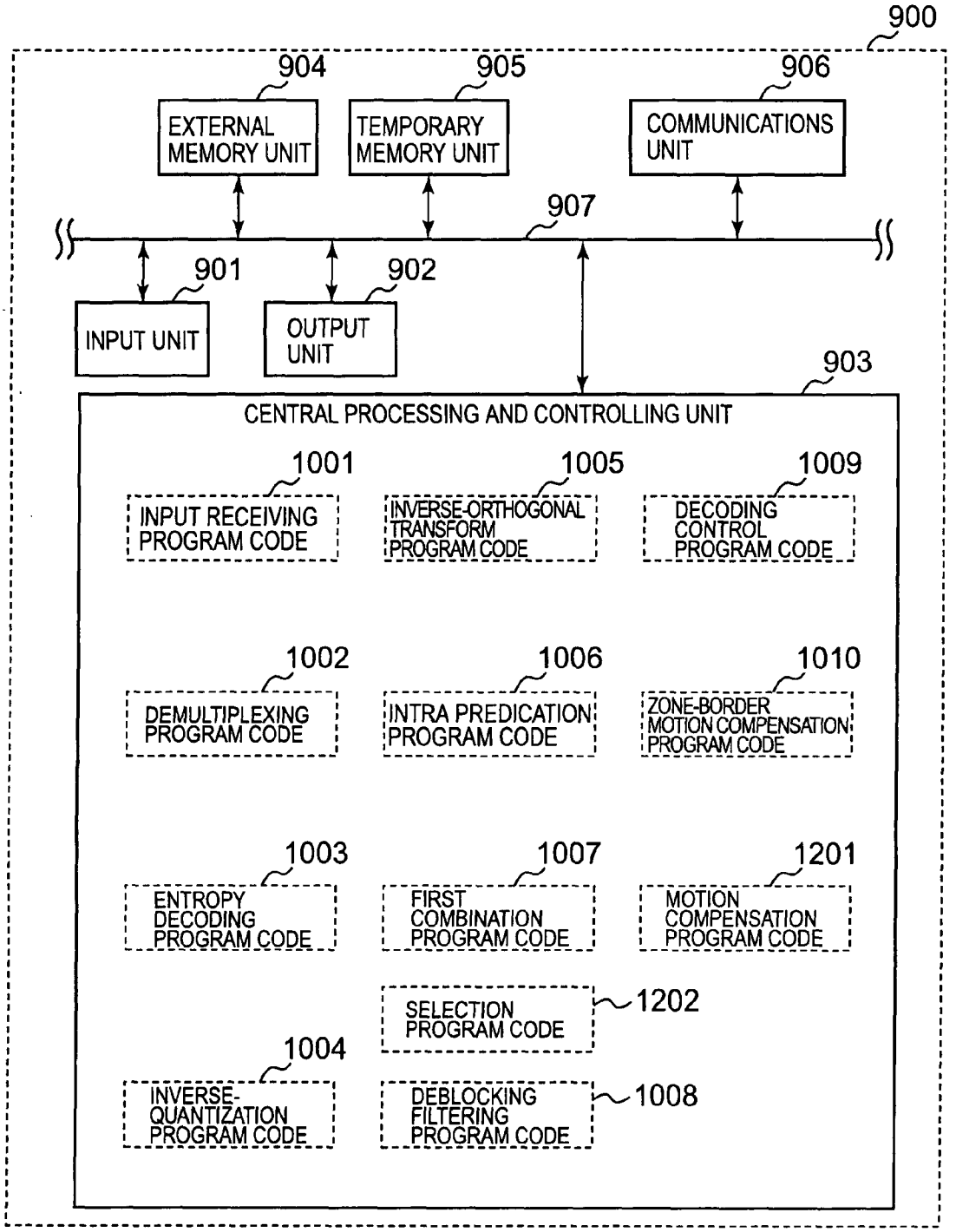
900
904
905
906
EXTERNAL MEMORY UNIT
TEMPORARY MEMORY UNIT
COMMUNICATIONS UNIT
907
901
902
INPUT UNIT
OUTPUT UNIT
903
CENTRAL PROCESSING AND CONTROLLING UNIT
1001
1005
1009
INPUT RECEIVING PROGRAM CODE
INVERSE-ORTHOGONAL TRANSFORM PROGRAM CODE
DECODING CONTROL PROGRAM CODE
1002
1006
1010
DEMULTIPLEXING PROGRAM CODE
INTRA PREDICATION PROGRAM CODE
ZONE-BORDER MOTION COMPENSATION PROGRAM CODE
1003
1007
1201
ENTROPY DECODING PROGRAM CODE
FIRST COMBINATION PROGRAM CODE
MOTION COMPENSATION PROGRAM CODE
SELECTION PROGRAM CODE
1202
1004
INVERSE-QUANTIZATION PROGRAM CODE
DEBLOCKING FILTERING PROGRAM CODE
1008

FIG. 12

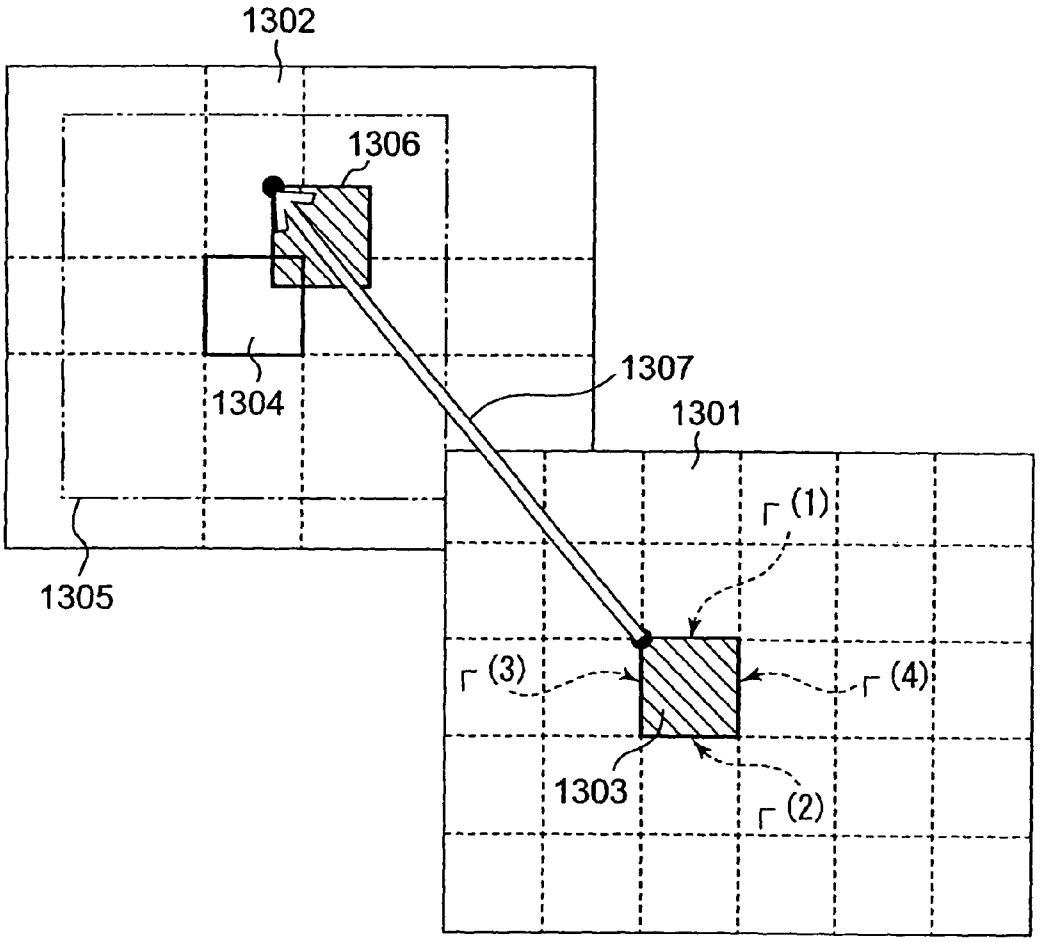

FIG. 13

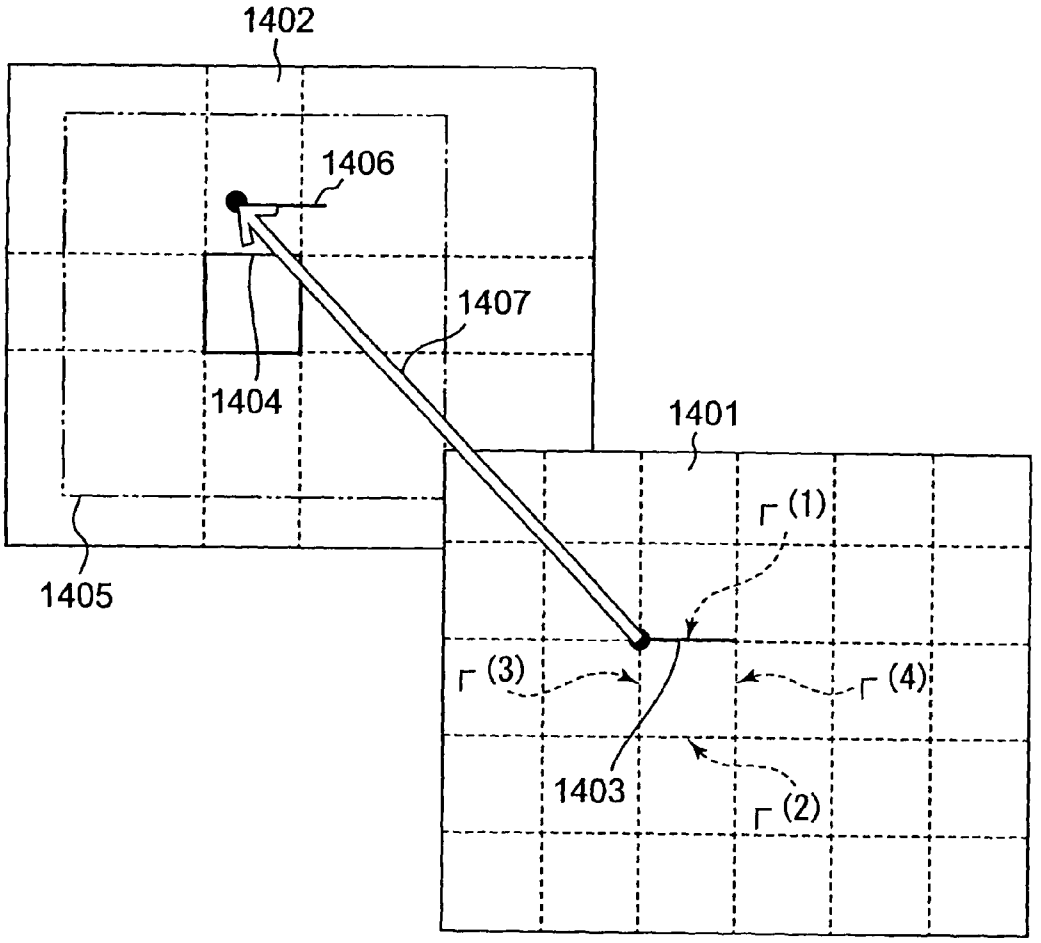

FIG. 14

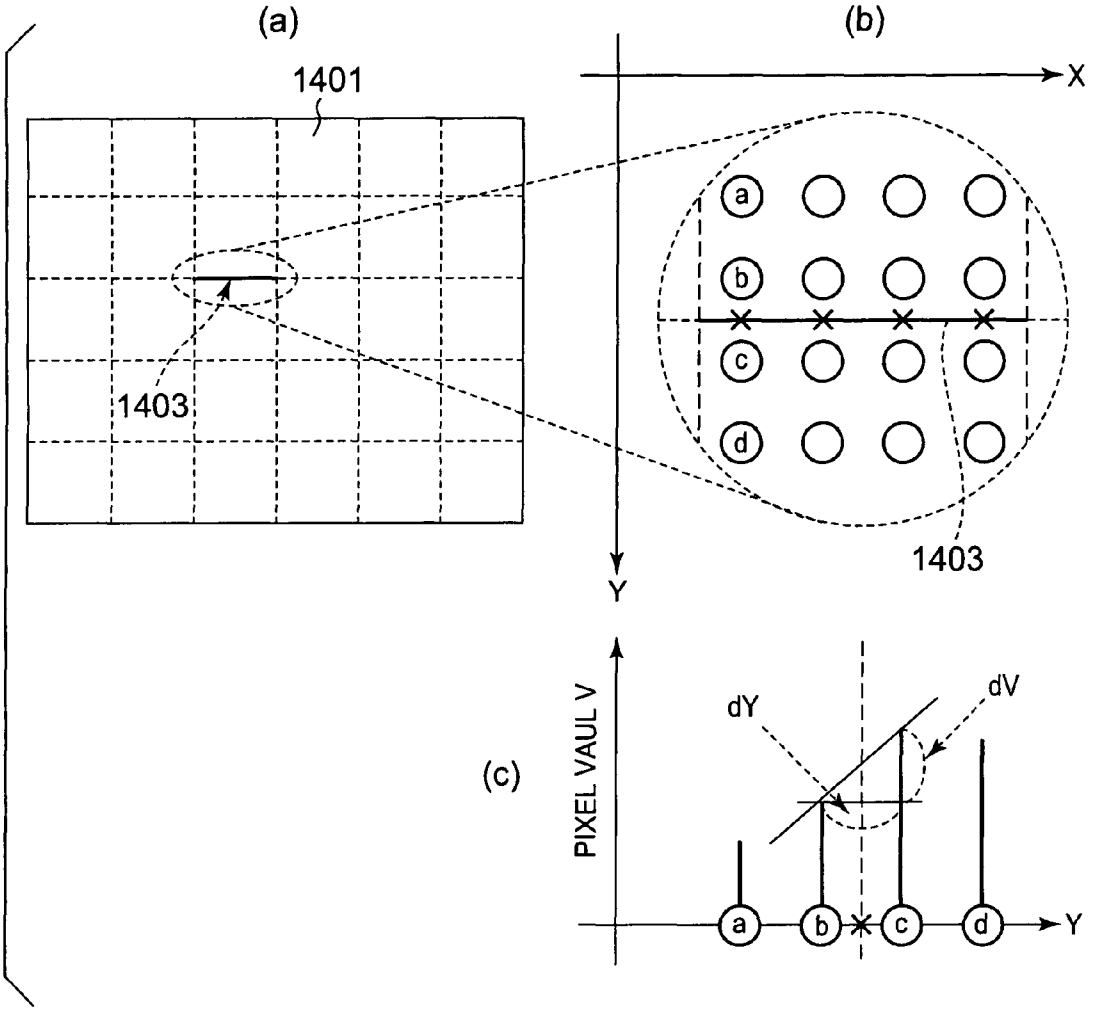

FIG. 15

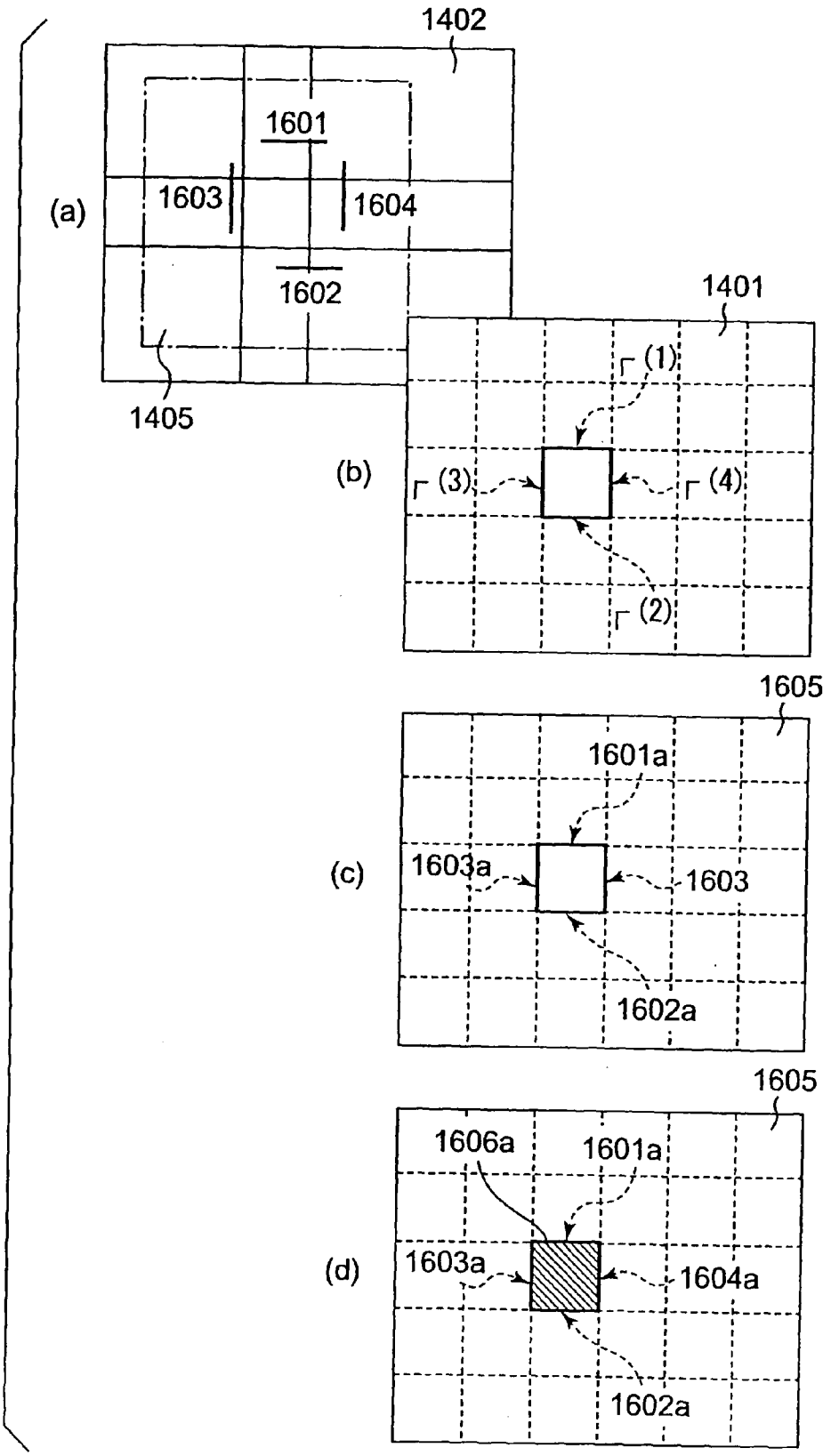
1402
1601
(a)
1603
1604
1602
1405
1401
(1)
(b)
(3)
(4)
(2)
1605
1601a
(c)
1603a
1603
1602a
1605
1606a
1601a
(d)
1603a
1604a
1602a

FIG. 16

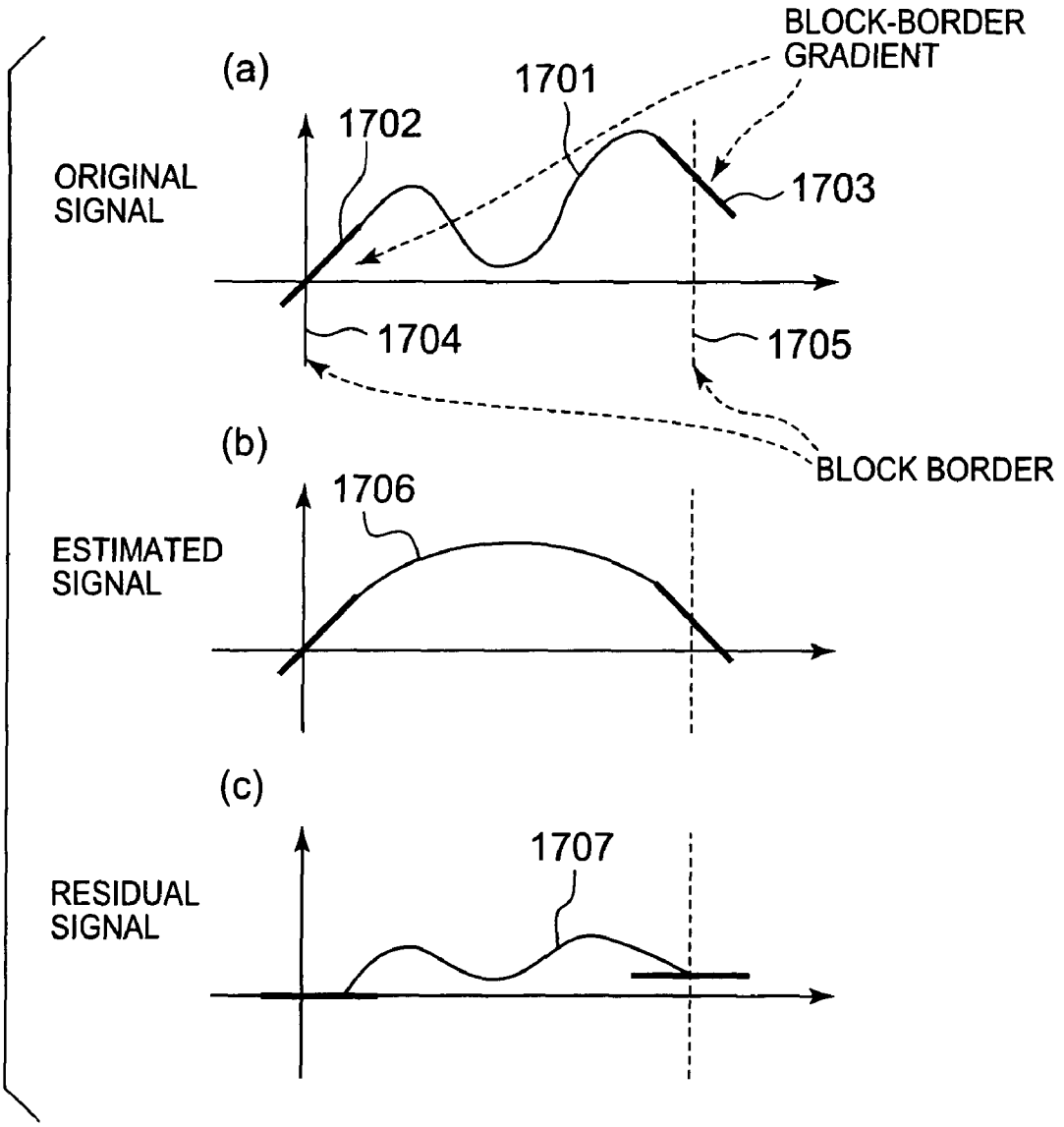
BLOCK-BORDER GRADIENT
(a)
1701
1702
ORIGINAL SIGNAL
1703
1704
1705
BLOCK BORDER
(b)
1706
ESTIMATED SIGNAL
(c)
1707
RESIDUAL SIGNAL

FIG. 17

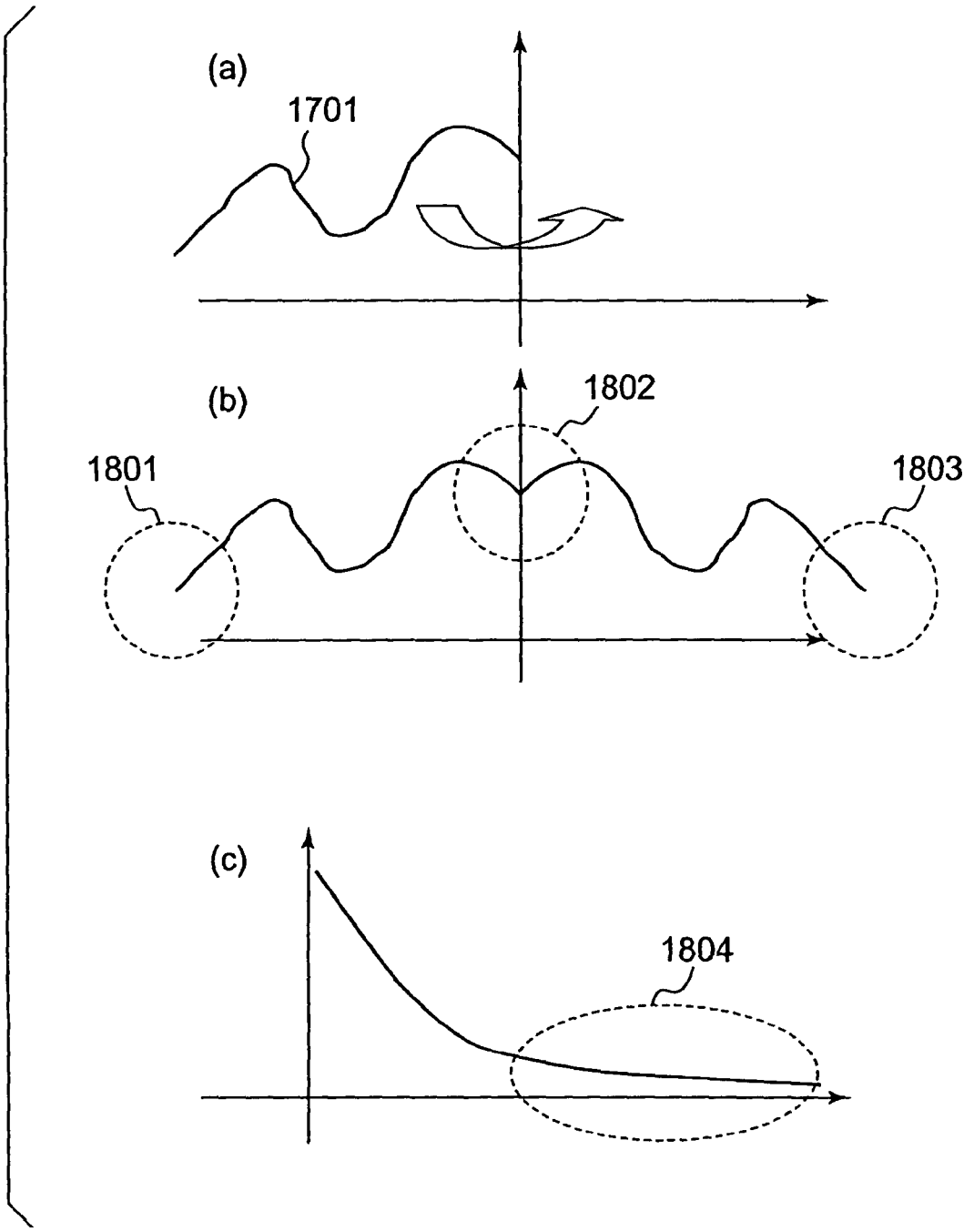

FIG. 18

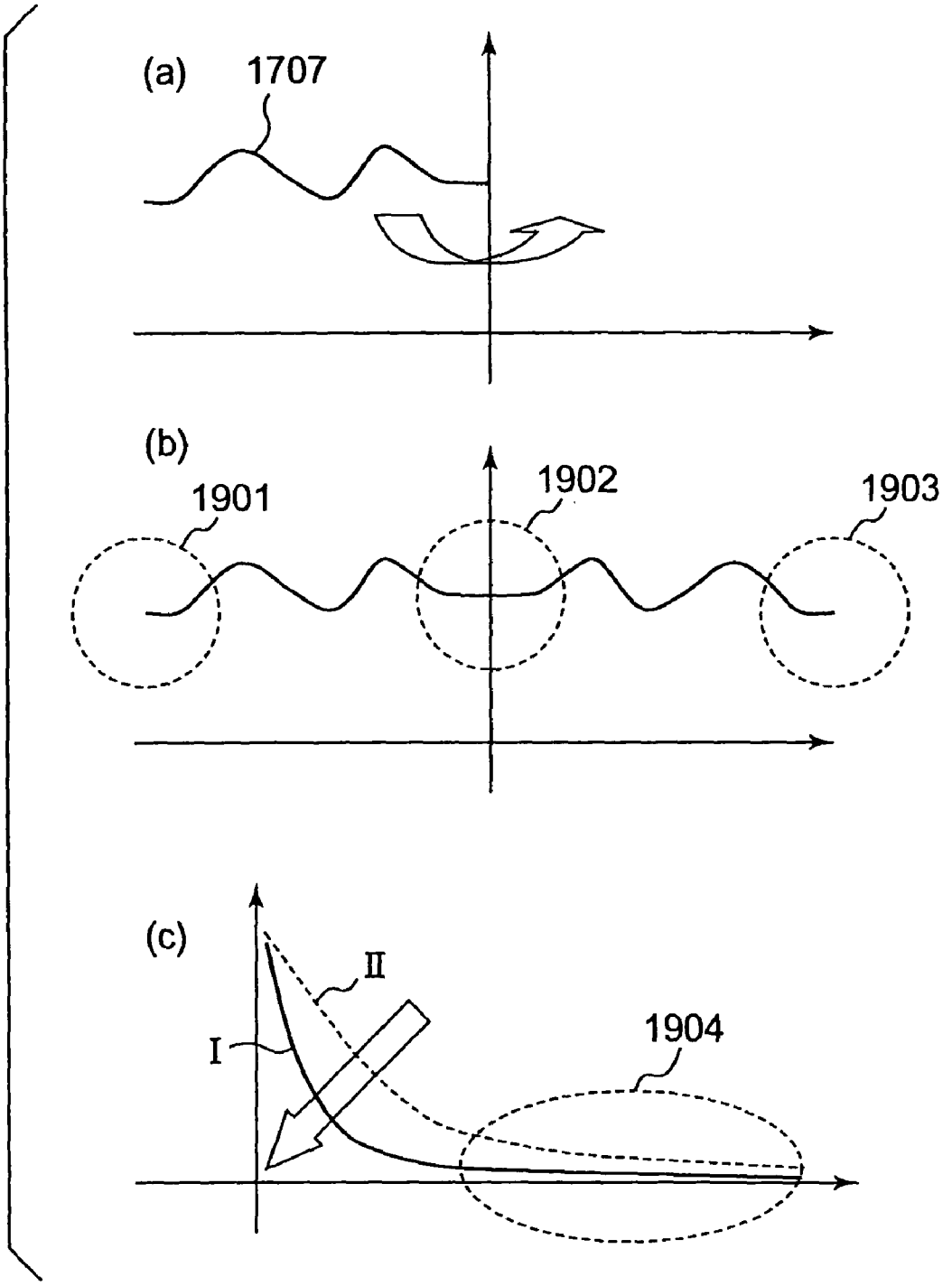

FIG. 19

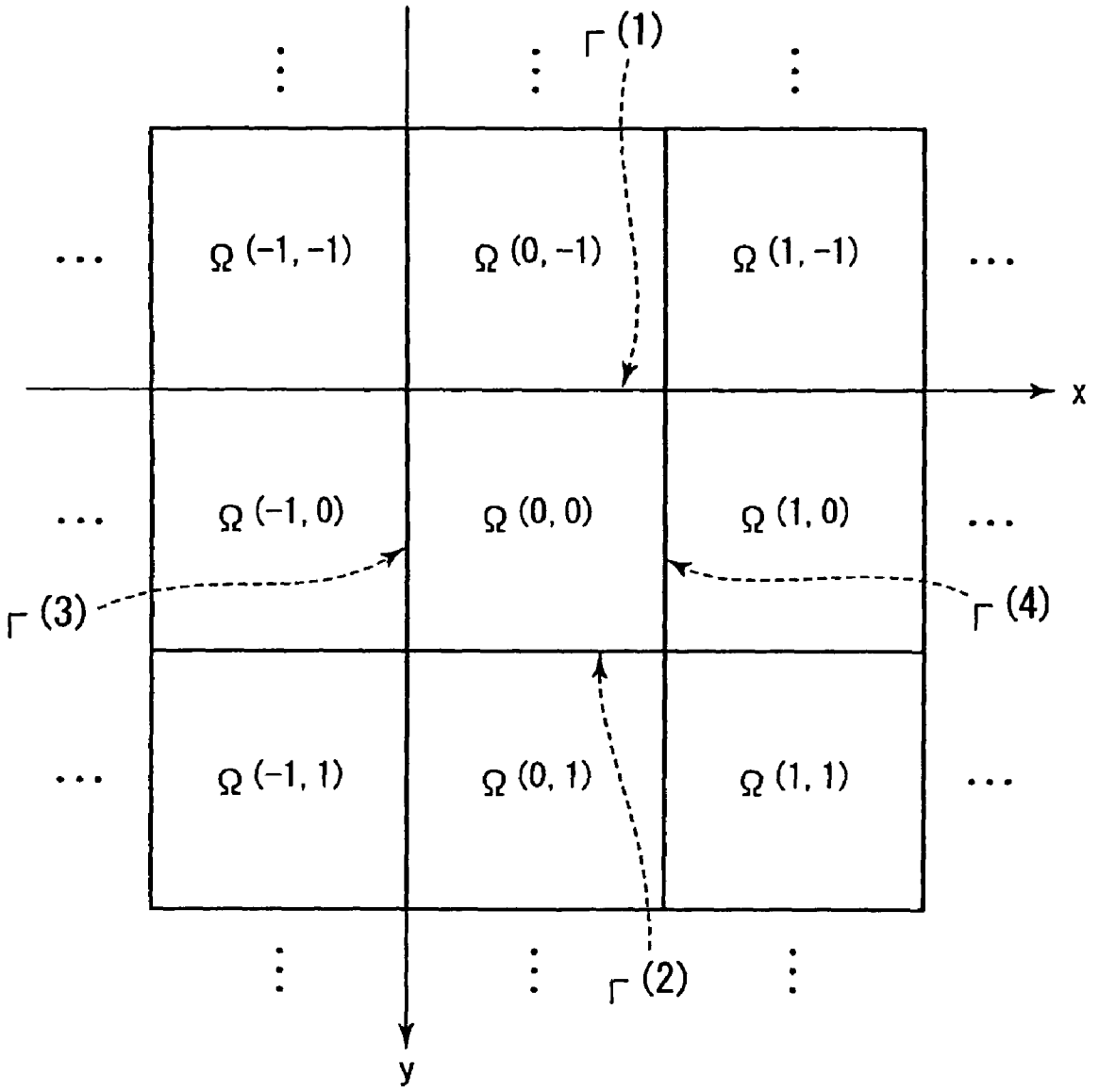

FIG. 20

MOVING-PICTURE CODING APPARATUS, METHOD AND PROGRAM, AND MOVING-PICTURE DECODING APPARATUS, METHOD AND PROGRAM

CROSS-REFERENCE TO RELATED APPLICATIONS

This application is based on and claims the benefit of priority from the prior Japanese Patent Application Nos. 2006-112995 filed on Apr. 17, 2006 and 2007-93162 filed on Mar. 30, 2007, the entire contents of which are incorporated herein by reference.

BACKGROUND OF THE INVENTION

The present invention relates to a moving-picture coding apparatus, method and program, and a moving-picture decoding apparatus, method and program, with a boundary condition obtained between moving-picture blocks and applied for coding or decoding.

Several types of video broadcast services via digital broadcasts or networks are popular now. This creates a demand for higher moving-picture coding efficiency for recording a larger amount of moving pictures at a higher picture quality and definition.

There are now several new coding methods, such as, MPEG-4 AVC (which will be referred to as AVC or H. 264, hereinafter) with drastically higher coding efficiency than known coding methods. These new coding methods promote more efficient data encoding. The methods perform video-data compression with combination of MC (Motion Compensation) and DCT (Discrete Cosine Transform).

Known MC is conducted for each rectangular zone (typically, a square block which will be referred to as an MC block or simply a block, hereinafter), to detect the degree of motion based on the assumption that all of the pixels in each rectangular zone exhibit the same motion, thus generating motion-vector data. Thus, there is a case in that a video signal is discontinuous on an MC-block border in a predictive picture constituted by spatially arranged MC blocks. Such a discontinuous situation on the MC-block border results from per-block coding procedures, such as, detection of the degree of motion followed by orthogonal transform, quantization, etc. This phenomenon becomes more remarkable as the amount of data for use in coding becomes smaller, which is mostly noticeable as block distortion.

Especially, discontinuity on a block border and mismatching of texture data in block are mostly caused by a larger motion of an object in a moving picture, deformation of the object itself, variation in relativity among several objects, i.e., disappearance or appearance of the objects, etc., between pictures of moving objects.

A method to remedy the discontinuous situation on an MC-block border discussed above is disclosed, for example, in International Publication No. WO2003/003749A1. In this method, a procedure to adaptively smooth a discontinuous waveform generated on a border of MC blocks in a predictive picture produced by per-block motion compensation is performed by a relatively easy operation with a smoothing filter provided following to a motion compensator. This enhances coding efficiency at a low bit rate with motion compensation.

The above method applies smoothing to a video signal at pixels adjacent to a border of blocks in aiming for mitigating a discontinuous situation in order to remedy the discontinuous situation between blocks and mismatching of texture

data. The discontinuous situation between blocks may, however, not be mitigated enough, which depends on the degree of smoothing.

For example, a lower degree of smoothing than required cannot mitigate enough a discontinuous situation between blocks which thus remains as block distortion. In contrast, a higher degree of smoothing than required can mitigate the discontinuous situation between blocks, which is, nevertheless, too much for texture data in block, thus resulting in low quality in the texture data.

Smoothing is followed by orthogonal transform, quantization and entropy coding to a residual video frame produced by subtraction between a reference picture and a moving-picture frame to be coded. Smoothing is applied to a predictive picture produced by motion compensation after an optimum block is selected in motion estimation, thus such a block may not always be optimum after this procedure. There may be several blocks having the same quality as that block in the predictive picture after smoothing. Thus, it requires a larger amount of computation for obtaining more appropriate motion-vector data under consideration of the code amount of motion-vector data and orthogonal-transform coefficients data after quantization, because of repeated operations of motion estimation, motion compensation and smoothing procedures for obtaining optimum motion-vector data.

SUMMARY OF THE INVENTION

A purpose of the present invention is to provide a moving-picture coding apparatus, method and program, and a moving-picture decoding apparatus, method and program that, without a smoothing procedure, can produce a predictive picture maintaining continuity of a video signal included in the predictive picture even on a block border, with no discontinuous state between blocks which appears in typical motion estimation and compensation.

Another purpose of the present invention is to provide a moving-picture coding apparatus, method and program, and a moving-picture decoding apparatus, method and program that can efficiently transfer, receive or reproduce a coded bitstream having a coded amount smaller than known art.

The present invention provides a moving-picture coding apparatus comprising: a predictive encoder to produce and encode a residual picture that is a residual signal between a picture to be coded that is an input moving-picture video signal to be subjected to coding and a predictive picture produced from a reference picture that is a local decoded video signal for each of a plurality of rectangular zones, each composed of a specific number of pixels, into which a video area of the moving-picture video signal is divided; a zone-border motion estimator to obtain a boundary condition of each of a plurality of borders between the rectangular zones and another plurality of rectangular zones adjacent to the rectangular zones, find a border, of the reference picture, having a boundary condition that matches the boundary condition, by motion-vector search in the reference picture, and generate border motion-vector data that is data on a motion vector from a border of the rectangular zone in the picture to be coded to the border of the reference picture thus found; and a zone-border motion compensator to define a boundary condition of a border that corresponds to the border motion vector data, from the reference picture based on the border motion-vector data, and generate an estimated video signal in each rectangular zone in the picture to be coded, that satisfies Poisson's Equation, thus producing a first predictive picture,

wherein the predictive encoder produces the residual picture with the first predictive picture as the predictive picture and encodes the residual picture.

Moreover, the present invention provides a moving-picture coding program comprising: a predictive encoding program code to produce and encode a residual picture that is a residual signal between a picture to be coded that is an input moving-picture video signal to be subjected to coding and a predictive picture produced from a reference picture that is a local decoded video signal for each of a plurality of rectangular zones, each composed of a specific number of pixels, into which a video area of the moving-picture video signal is divided; a zone-border motion estimation program code to obtain a boundary condition of each of a plurality of borders between the rectangular zones and another plurality of rectangular zones adjacent to the rectangular zones, find a border, of the reference picture, having a boundary condition that matches the boundary condition, by motion-vector search in the reference picture, and generate border motion-vector data that is data on a motion vector from a border of the rectangular zone in the picture to be coded to the border of the reference picture thus found; and a zone-border motion compensation program code to define a boundary condition of a border that corresponds to the border motion vector data, from the reference picture based on the border motion-vector data, and generate an estimated video signal in each rectangular zone in the picture to be coded, that satisfies Poisson's Equation, thus producing a first predictive picture, wherein the predictive encoding program code produces the residual picture with the first predictive picture as the predictive picture and encodes the residual picture.

Furthermore, the present invention provides a moving-picture decoding apparatus comprising: a demultiplexer to demultiplex coded data from an input signal based on a specific syntax structure, the input signal being obtained by multiplexing a coded bitstream obtained by predictive coding, border motion-vector data and post-quantization data obtained by quantization in the predictive coding, the coded bitstream obtained by producing and encoding a residual picture that is a residual signal between a picture to be coded that is an input moving-picture video signal to be subjected to coding and a predictive picture produced from a reference picture that is a local decoded video signal for each of a plurality of rectangular zones, each composed of a specific number of pixels, into which a video area of the moving-picture video signal is divided, obtaining a boundary condition of each of a plurality of borders between the rectangular zones and another plurality of rectangular zones adjacent to the rectangular zones, finding a border, of the reference picture, having a boundary condition that matches the boundary condition, by motion-vector search in the reference picture, and generating the border motion-vector data that is data on a motion vector from a border of the rectangular zone in the picture to be coded to the border of the reference picture thus found, defining a boundary condition of a border that corresponds to the border motion vector data, from the reference picture based on the border motion-vector data, and generating an estimated video signal in each rectangular zone in the picture to be coded, that satisfies Poisson's Equation, thus producing the predictive picture; an entropy decoder to perform entropy decoding to the data thus demultiplexed to generate, at least, the post-quantization data, the border motion-vector data and parameter data required for constructing a specific syntax structure; an inverse-quantizer to perform inverse-quantization to the post-quantization data to generate post-quantization orthogonal transform coefficients data; an inverse-orthogonal transformer to perform inverse-orthogonal transform to the post-quantization orthogonal transform coefficients data to produce a decoded residual picture of one video area; a zone-border motion compensator to define a boundary condition of a border that corresponds to the border motion vector data, from the reference picture based on the border motion-vector data, and generate an estimated video signal in each rectangular zone in the picture to be coded, that satisfies Poisson's Equation, thus producing a first predictive picture; a combiner to combine the first predictive picture and the decoded residual picture to generate a decoded moving-picture signal; and a memory to store the decoded moving-picture signal for at least one picture as a reference picture.

Furthermore, the present invention provides a moving-picture decoding program comprising: a demultiplex program code to demultiplex coded data from an input signal based on a specific syntax structure, the input signal being obtained by multiplexing a coded bitstream obtained by predictive coding, border motion-vector data and post-quantization data obtained by quantization in the predictive coding, the coded bitstream obtained by producing and encoding a residual picture that is a residual signal between a picture to be coded that is an input moving-picture video signal to be subjected to coding and a predictive picture produced from a reference picture that is a local decoded video signal for each of a plurality of rectangular zones, each composed of a specific number of pixels, into which a video area of the moving-picture video signal is divided, obtaining a boundary condition of each of a plurality of borders between the rectangular zones and another plurality of rectangular zones adjacent to the rectangular zones, finding a border, of the reference picture, having a boundary condition that matches the boundary condition, by motion-vector search in the reference picture, and generating the border motion-vector data that is data on a motion vector from a border of the rectangular zone in the picture to be coded to the border of the reference picture thus found, defining a boundary condition of a border that corresponds to the border motion vector data, from the reference picture based on the border motion-vector data, and generating an estimated video signal in each rectangular zone in the picture to be coded, that satisfies Poisson's Equation, thus producing the predictive picture; an entropy decoding program code to perform entropy decoding to the data thus demultiplexed to generate, at least, the post-quantization data, the border motion-vector data and parameter data required for constructing a specific syntax structure; an inverse-quantization program code to perform inverse-quantization to the post-quantization data to generate post-quantization orthogonal transform coefficients data; an inverse-orthogonal transform program code to perform inverse-orthogonal transform to the post-quantization orthogonal transform coefficients data to produce a decoded residual picture of one video area; a zone-border motion compensation program code to define a boundary condition of a border that corresponds to the border motion vector data, from the reference picture based on the border motion-vector data, and generate an estimated video signal in each rectangular zone in the picture to be coded, that satisfies Poisson's Equation, thus producing a first predictive picture; and a combine program code to combine the first predictive picture and the decoded residual picture to generate a decoded moving-picture signal, the decoded moving-picture signal for at least one picture being stored as a reference picture.

Moreover, the present invention provides a moving-picture coding method comprising the steps of: producing and encoding a residual picture that is a residual signal between a picture to be coded that is an input moving-picture video

signal to be subjected to coding and a predictive picture produced from a reference picture that is a local decoded video signal for each of a plurality of rectangular zones, each composed of a specific number of pixels, into which a video area of the moving-picture video signal is divided; obtaining a boundary condition of each of a plurality of borders between the rectangular zones and another plurality of rectangular zones adjacent to the rectangular zones, finding a border, of the reference picture, having a boundary condition that matches the boundary condition, by motion-vector search in the reference picture, and generating border motion-vector data that is data on a motion vector from a border of the rectangular zone in the picture to be coded to the border of the reference picture thus found; defining a boundary condition of a border that corresponds to the border motion vector data, from the reference picture based on the border motion-vector data, and generating an estimated video signal in each rectangular zone in the picture to be coded, that satisfies Poisson's Equation, thus producing a predictive picture; producing a first residual picture from a difference between the picture to be coded and the predictive picture; performing orthogonal transform to the first residual picture, thus generating orthogonal-transform coefficients data; performing quantization to the orthogonal-transform coefficients data based on a specific quantization parameter, thus generating post-quantization data; performing inverse-quantization to the post-quantization data based on a specific quantization parameter, thus generating post-inverse-quantization data; and performing inverse-orthogonal transform to the post-inverse-quantization data, thus producing a decoded residual picture.

Moreover, the present invention provides a moving-picture decoding method comprising the steps of: demultipling coded data from an input signal based on a specific syntax structure, the input signal being obtained by multiplexing a coded bitstream obtained by predictive coding, border motion-vector data and post-quantization data obtained by quantization in the predictive coding, the coded bitstream obtained by producing and encoding a residual picture that is a residual signal between a picture to be coded that is an input moving-picture video signal to be subjected to coding and a predictive picture produced from a reference picture that is a local decoded video signal for each of a plurality of rectangular zones, each composed of a specific number of pixels, into which a video area of the moving-picture video signal is divided, obtaining a boundary condition of each of a plurality of borders between the rectangular zones and another plurality of rectangular zones adjacent to the rectangular zones, finding a border, of the reference picture, having a boundary condition that matches the boundary condition, by motion-vector search in the reference picture, and generating the border motion-vector data that is data on a motion vector from a border of the rectangular zone in the picture to be coded to the border of the reference picture thus found, defining a boundary condition of a border that corresponds to the border motion vector data, from the reference picture based on the border motion-vector data, and generating an estimated video signal in each rectangular zone in the picture to be coded, that satisfies Poisson's Equation, thus producing the predictive picture; performing entropy decoding to the data thus demultiplexed to generate, at least, the post-quantization data, the border motion-vector data and parameter data required for constructing a specific syntax structure; performing inverse-quantization to the post-quantization data to generate post-quantization orthogonal transform coefficients data; performing inverse-orthogonal transform to the post-quantization orthogonal transform coefficients data to produce a decoded residual picture of one video area; defining a boundary condition of a border that corresponds to the border motion vector data, from the reference picture based on the border motion-vector data, and generate an estimated video signal in each rectangular zone in the picture to be coded, that satisfies Poisson's Equation, thus producing a predictive picture; combining the first predictive picture and the decoded residual picture to generate a decoded moving-picture signal; and storing the decoded moving-picture signal for at least one picture as a reference picture.

BRIEF DESCRIPTION OF DRAWINGS

FIG. **1** is a block diagram of a first embodiment of a moving-picture coding apparatus according to the present invention;

FIG. **2** is a flowchart for explaining an operation of the first embodiment of the moving-picture coding apparatus according to the present invention;

FIG. **3** is a block diagram of a first embodiment of a moving-picture decoding apparatus according to the present invention;

FIG. **4** is a flowchart for explaining an operation of the first embodiment of the moving-picture decoding apparatus according to the present invention;

FIG. **5** is a block diagram of a second embodiment of a moving-picture coding apparatus according to the present invention;

FIG. **6** is a flowchart for explaining an operation of the second embodiment of the moving-picture coding apparatus according to the present invention;

FIG. **7** is a block diagram of a second embodiment of moving-picture decoding apparatus according to the present invention;

FIG. **8** is a flowchart for explaining an operation of the second embodiment of the moving-picture decoding apparatus according to the present invention;

FIG. **9** is a block diagram of a data processing system operated with a first embodiment of a moving-picture coding program according to the present invention;

FIG. **10** is a block diagram of a data processing system operated with a first embodiment of a moving-picture decoding program according to the present invention;

FIG. **11** is a block diagram of a data processing system operated with a second embodiment of a moving-picture coding program according to the present invention;

FIG. **12** is a block diagram of a data processing system operated with a second embodiment of a moving-picture decoding program according to the present invention;

FIG. **13** is an illustration of a concept of motion estimation to generate motion-vector data with motion-vector search through typical block matching;

FIG. **14** is an illustration of a concept of a zone-border motion estimation procedure installed in a zone-border motion estimator of the first embodiment of the moving-picture coding apparatus according to the present invention;

FIG. **15** is an illustration of obtaining gradient information on a block border, that is a boundary condition of the block border in a picture to be coded;

FIG. **16** is an illustration of production of a predictive picture through a procedure of generating a predictive signal in a block and applying the predictive signal to a predictive block for each block of a predictive picture to be generated;

FIG. **17** is an illustration of a basic concept of polyharmonic cosine transform;

FIG. **18** is an illustration of ordinary DCT to an original signal;

FIG. **19** is an illustration of ordinary DCT to a residual signal; and

FIG. **20** is a schematic illustration of each picture divided into several rectangular zones.

DETAILED DESCRIPTION OF PREFERRED EMBODIMENTS

Embodiments of the present invention will be described with reference to drawings. In the following disclosure, ordinals, such as a first, a second, etc., are only used for discriminating terms, such as "picture", from each other, not used for indicating the order.

Embodiment I

Disclosed first are first embodiments of a moving-picture coding apparatus, a moving-picture decoding apparatus, and their corresponding methods according to the present invention.

FIG. **1** shows a block diagram of a first embodiment of a moving-picture coding apparatus according to the present invention. As shown in FIG. **1**, the coding apparatus in this embodiment is equipped at least with a switch **102**, a switch **103**, a frame memory **104**, a second subtractor **106**, an orthogonal transformer **107**, a quantizer **108**, an inverse-quantizer **109**, an inverse-orthogonal transformer **110**, a first combiner **111**, an entropy encoder **113**, a multipixer **114**, an output transferer **115**, a coding controller **117**, a zone-border motion estimator **118**, a zone-border motion compensator **119**, and a first subtractor **120**. Moreover, it is preferable for the coding apparatus to be equipped with an intra predictor **105** and a deblocking filter **112**, as shown in FIG. **1**. This embodiment features the zone-border motion estimator **118** and the zone-border motion compensator **119**, without such a smoothing filter in the known technology discussed above. The component parts except the multiplexer **114**, the output transferer **115**, the coding controller **117**, the zone-border motion estimator **118**, and the zone-border motion compensator **119** are referred to as a predictive encoder.

Disclosed next in detail is the component parts of the first embodiment of the moving-picture coding apparatus according to the present invention.

The switch **102** switches a picture between a second residual picture sent from the second subtractor **106** and a first residual picture sent from the first subtractor **120**, in response to an instruction from the coding controller **117**, to supply a necessary residual picture to the orthogonal transformer **107**. As disclosed later, the second residual picture is produced from a picture to be coded and a fourth predictive picture through intra prediction whereas the first residual picture is produced from the picture to be coded and a first predictive picture through zone-border motion compensation.

The switch **103** switches a picture between the first predictive picture sent from the zone-border motion compensator **119** and the fourth predictive picture sent from the intra predictor **105**, in response to an instruction from the coding controller **117**, to supply a necessary predictive picture to the first combiner **111**.

The frame memory **104**, in FIG. **1**, receives a decoded picture from the deblocking filter **112** after deblocking filtering and stores it as a reference picture. It may also store a picture to be coded that is an input signal **101**, as a reference picture depending on an encoding mode. Moreover, the frame memory **104** supply a required reference picture to any component parts of the coding apparatus, at least, to the intra predictor **105**, the zone-border motion estimator **118**, and the zone-border motion compensator **119**.

The second subtractor **106** receives the picture to be coded, the input signal **101**, and the fourth predictive picture from the intra predictor **105**, and takes a difference between the picture to be coded and the fourth predictive picture, to produce the second residual picture which is then supplied to a terminal "b" of the switch **102**.

The orthogonal transformer **107** receives a residual picture from the switch **102** and performs orthogonal transform to the residual picture, thus generating orthogonal-transform coefficients data which are then supplied to the quantizer **108**. Here, the basis for orthogonal transform is the DCT (Discrete Cosine Transform) basis. The orthogonal-transform coefficients data thus generated are preferably DCT coefficients data. Although DCT is used as the orthogonal transform basis in this embodiment, the present invention is not limited to this orthogonal transform basis.

The quantizer **108** receives the DCT coefficients data from the orthogonal transformer **107** and quantizes the data based on a specific quantization parameter to generate post-quantization data which are then supplied to the inverse-quantizer **109** and the entropy encoder **113**. The inverse-quantizer **109** receives the post-quantization data from the quantizer **108** and performs inverse-quantization to the data based on a specific quantization parameter to generate post-inverse-quantization data which are then supplied to the inverse-orthogonal transformer **110**.

The inverse-orthogonal transformer **110** performs inverse-orthogonal transform to the post-inverse-quantization data to produce a decoded residual picture which is then supplied to the first combiner **111**. The first combiner **111** receives the decoded residual picture from the inverse-orthogonal transformer **110** and the predictive picture from the switch **103**. It combines the decoded residual picture and the predictive picture to produce a decoded picture which is then supplied to the intra predictor **105** and the deblocking filter **112**.

The entropy encoder **113** receives at least post-quantization data from the quantizer **108** and border motion-vector data from the zone-border motion estimator **118**. Here, it is preferable for the entropy encoder **113** to receive other parameter data, for example, required for constructing a specific syntactic structure, from the respective component parts of the coding apparatus. The parameter data required for constructing such a specific syntactic structure may preferably include macroblock data indicating any kind of state of a macroblock, quantization parameter data for use in quantization and inverse-quantization, intra-prediction mode data for specifying a mode of intra prediction, frame-order data for specifying the order of referring to reference video frames, etc. The entropy encoder **113** performs entropy coding to the above several types of data to generate coded bit strings which are then supplied to the multiplexer **114**.

The multiplexer **114** multiplexes coded bit strings based on the specific syntactic structure to generate a coded bitstream which is then supplied to the output transferer **115**.

The output transferer **115** performs a packetization procedure to the coded bitstream to produce packet data so that the bitstream carries specific packet headers and payloads when output to a transfer line or a storage medium (either not shown), as an output signal **116**. For the packet data, a packet header and a payload are treated as one unit. Typically, a packetization procedure is performed in such a way that a coded bitstream is divided into smaller ones and loaded into payloads and added with packet headers. The output transferer **115** outputs the packet data as the output signal **116** depending on the state of the transfer line or storage medium.

The coding controller **117** supplies several types of parameter data required for coding to the respective component parts of the coding apparatus (connection for supplying the parameter data is omitted from FIG. **1**), in order to control the operation of the coding apparatus of the present invention. It further supplies the used parameter data to the entropy encoder **113**. Moreover, the coding controller **117** performs input/output control to the respective component parts, and, at least, performs switching control between the switches **102** and **103**.

The zone-border motion estimator **118** receives an input picture to be coded in a picture zone of an input moving-picture signal to be coded and a reference picture stored in the frame memory **104**. Here, a picture zone is a frame, which may, however, be a slice or filed instead of a frame. The zone-border motion estimator **118** divides the picture to be coded into block zones, a plurality of rectangular zones, each of which consists of specific number of pixels, and calculates a gradient (which will be discussed later) of the video signal at each of sides among blocks in the picture to be coded, that is a boundary condition at each side. This utilizes a feature in that, once a boundary condition is determined in a specific zone, an estimated signal that satisfies Poisson's Equation can be generated based on the boundary condition in that zone.

Moreover, the zone-border motion estimator **118** performs zone-border motion estimation to find out the location of a gradient of a video signal in the reference picture through motion-vector search, the closest to a gradient of the video signal in each side of a block in the picture to be coded, while calculating a gradient of the video signal at each side, thus generating border motion-vector data. The generated border motion-vector data is supplied to the zone-border motion compensator **119** and the entropy encoder **113**.

The zone-border motion compensator **119** receives the border motion-vector data from the zone-border motion estimator **118** and the reference picture from the frame memory **104**. It performs zone-border motion compensation to find out a gradient of the video signal in each side of a block, required for generating an estimated signal in a block, based on the border motion-vector data, apply the gradient thus found to Poisson's Equation to generate a predictive signal in a block that is a predictive signal per block in a picture, thus producing a first predictive picture. The produced first predictive picture is supplied to a terminal "a" of the switch **103** and the first subtractor **120**.

The first subtractor **120** receives a picture to be coded in a moving picture that is the input signal **101** and the first predictive picture from the zone-border motion compensator **119**, to produce a first residual picture based on the difference between the picture to be coded and the first predictive picture, the first residual picture being supplied to a terminal "a" of the switch **102**.

The intra predictor **105** receives a decoded picture from the first combiner **111** and produces a fourth predictive picture through intra prediction. A picture to be used in intra prediction may be sent from the frame memory **104**. The fourth predictive picture is supplied to a terminal "b" of the switch **103** and the second subtractor **106**.

The deblocking filter **112** receives the decoded picture from the first combiner **111** and, after performing a deblocking filtering procedure, supplies the decoded picture thus deblocking-filtered to the frame memory **104** to store the decoded picture as a reference picture.

Disclosed next with reference to FIGS. **13** to **16** are the zone-border motion estimation and the zone-border motion compensation procedures performed by the zone-border motion estimator **118** and the zone-border motion compensator **119**, respectively, that are the major components of the coding apparatus in the first embodiment of the present invention.

FIG. **13** is an illustration of a concept of motion estimation to generate motion-vector data with vector search through typical block matching. The size of a rectangular zone to be used in block matching is a block of 4 pixels in the horizontal direction and 4 pixels in the vertical direction, for expediency and clarity.

At first, a picture to be coded **1301** is divided into a specific number of blocks. Borders between a block that is an object to be predicted **1303** and the surrounding blocks are denoted by $\Gamma^{(1)}$, $\Gamma^{(2)}$, $\Gamma^{(3)}$ and $\Gamma^{(4)}$, respectively. Defined next in a reference picture **1302** is a base position **1304** that corresponds to a zone located at the same spatial position as the block, the object to be predicted **1303**, in the picture to be coded **1301**. Motion-vector search starts at the base position **1304**.

Motion-vector search is, typically, performed with block matching at ½-pixel or ¼-pixel accuracy in a search zone **1305**, indicated by a dash-dot-dot line, set in the reference picture **1302**. Block matching is, typically, performed while searching a block that has the smallest SAD (Sum of Absolute Difference) in the search zone **1305** in the reference picture **1302**, to find out a matched block **1306**. This is followed by motion estimation to obtain motion-vector data **1307** that is a difference in spatial position between the block that is the object to be predicted **1303** and the matched block **1306**.

Motion compensation is then performed by locating the matched block **1306** in the reference picture **1302** based on the motion-vector data **1307** and copying pixel data in the block **1306** and arranging the copied pixel data in the corresponding spatial locations in a predictive picture for each block of the predictive picture. Such per-block motion compensation occasionally causes discontinuity with no smooth continuity between blocks in terms of the characteristics of a video such as the shape or contour of an object in the video and the texture, the arrangement of shapes, colors or lines, in the video.

FIG. **14** is an illustration of a concept of the zone-border motion estimation procedure performed by the zone-border motion estimator **118** of FIG. **1**. In this zone-border motion estimation, motion-vector search is performed on block borders $\Gamma^{(1)}$, $\Gamma^{(2)}$, $\Gamma^{(3)}$ and $\Gamma^{(4)}$ of a block to be predicted. Here, zone-border motion estimation is performed with $\Gamma^{(1)}$ as an object to be predicted **1403**.

Obtained first is a boundary condition of the block border $\Gamma^{(1)}$, the object to be predicted **1403**, as shown in (*a*) of FIG. **15**. The boundary condition is preferably a gradient of a video signal on a block border. In an example, here, imaginary pixels are indicated by symbols "x", as shown in (*b*) of FIG. **15**, and dY and dV are calculated to obtain a gradient dY/dV of each imaginary pixel of the symbol "x" from pixels adjacent to this imaginary pixel of the symbol "x", as shown in (*c*) of FIG. **15**. Here, dY is a distance between pixels b" and "c" and dV is a pixel value such as a luminance or a chrominance component of the pixels b" and "c".

In this way, the zone-border motion estimator **118** in the first embodiment obtains border gradient data that is a boundary condition of a block border in a picture to be coded. Then, in the first embodiment, the obtained border gradient data is defined as the best gradient data that is the closest gradient to the gradient of an original signal on the block border, and then found out from a search zone in a reference picture is a block border having the gradient, the closest to the best gradient data.

In detail, what is set in a reference picture **1402** in FIG. **14** is a search zone **1405** indicated by a dash-dot-dot line.

Defined next in the reference picture **1402** is a base position **1404** that corresponds to a border of a block located at the same spatial position as the block border $\Gamma^{(1)}$ of a block that is an object to be predicted **1403** in the picture to be coded **1401**. Gradient data of the base position **1404** is then calculated and compared with the best gradient data. Comparison, here, may be performed with SAD used in ordinary motion estimation.

Thereafter, target borders are scanned one by one in the search zone **1405** in the reference picture **1402** at ½-pixel or ¼-pixel accuracy, and then gradient data is calculated for each scanned target border and compared with the best gradient data, which is repeated for every target border, to find out a border **1406**, the best-matched, in the search zone **1405** of the reference picture **1402**. This is followed by zone-border motion estimation to obtain zone-border motion-vector data **1407** that is a difference in spatial position between the border of the block that is the object to be predicted **1403** in the picture to be coded **1402** and the best-matched border **1406** in the reference picture **1402**.

Next, as shown in FIG. **16**, what are defined as gradient data of a video signal on borders **1601***a*, **1602***a*, **1603***a* and **1604***a* in a predictive picture **1605** in (*c*) of FIG. **16**, are gradient data that are boundary conditions of borders **1601**, **1602**, **1603** and **1604** in the reference picture **1402** in (*a*) of FIG. **16** that match the block borders $\Gamma^{(1)}$, $\Gamma^{(2)}$, $\Gamma^{(3)}$ and $\Gamma^{(4)}$ of the block to be predicted in the picture to be coded **1401**. Poisson's Equation is then applied based on the gradient data of the video signal thus defined to generate a predictive signal in block which is then applied to a predictive block **1606***a*, as shown in (*d*) of FIG. **16**. These procedures are performed for each block of a predictive picture, thus producing the predictive picture, completion of the zone-border motion estimation.

Discussed next is PHLCT (Polyharmonic Cosine Transform) employed in the first embodiment in generation of a predictive signal in block with the gradient of a video signal on each side of a specific block applied as a boundary condition to Poisson's. Equation.

FIG. **17** is an illustration of a basic concept of PHLCT. PHLCT is a scheme to enhance DCT coding efficiency used for example in JPEG, as discussed in "Improvement of DCT-based Compression Algorithms Using Poisson's Equation". FIG. **17** illustrates transition of an original signal on a specific line and a boundary state of the original signal on block borders on the specific line in a specific block in an original video frame in the scheme. For an original signal **1701** shown in (*a*) of FIG. **17**, gradients **1702** and **1703** of the video signal are obtained on both edges of the original signal **1701**, that correspond to block borders **1704** and **1705**. The gradients **1702** and **1703** of the video signal on both edges are defined as boundary conditions. PHLCT is a scheme to generate an estimated signal, from DCT coefficients, based on a block boundary condition by means of a signal in a block represented by a specific source model, such as a quadratic function that defines behavior of the signal in the block.

An estimated signal **1706**, such as shown in (*b*) of FIG. **17**, is generated here under boundary conditions that are the gradients of the video signal on both edges of the original signal **1701**. It is preferable to employ a source model enabling estimation of a signal the closest to the original signal under the boundary conditions. A quadratic function is a typical example of the source model for a one-dimensional signal, such as shown in FIG. **17**. The present invention is, however, not limited to this model, a lower-order function such as a liner function or a higher-order function such as a cubic function and a quartic function are available. Accordingly, this embodiment implements the source model in generation of an estimated signal in a block analytically without mathematically solving Poisson's Equation with a huge amount of calculation.

The zone-border motion compensator **119** in this embodiment performs zone-border motion compensation with production of the first predictive picture by means of a predictive signal per block in a picture based on a predictive signal in block generated through application of such a source model, discussed above, with a boundary condition, here, the gradient of a video signal, determined in a reference picture by the zone-border motion estimator **118**.

After the zone-border motion compensator **119** generates the estimated signal **1706**, such as shown in (*b*) of FIG. **17**, under the boundary conditions, the first subtractor **120** takes a difference between the original signal **1701** shown in (*a*) of FIG. **17** and the estimated signal **1706** shown in (*b*) of FIG. **17**, to generate a residual signal **1707**, such as shown in (*c*) of FIG. **17**. Then, PHLCT is performed with typical orthogonal transform, such as, DCT, quantization and entropy coding to the residual signal **1707** thus generated.

Discussed next with reference to FIGS. **18** and **19** is what a difference appears between PHLCT and typical DCT. This explains what effects are given by orthogonal transform that follows construction of a predictive picture with predictive blocks produced in this embodiment.

FIG. **18** illustrates typical DCT to the original signal **1701** in (*a*) of FIG. **17**. In FIG. **18**, the abscissa indicates a video signal focused only on the direction "x" and the ordinate indicates a value (a luminance level) of each pixel on one line of the video signal thus focused. A waveform in FIG. **18** is represented by a continuous function for expediency, but nevertheless discrete values in practical (the same true for FIG. **19**).

A typical type of DCT is DCT-II. When DCT is performed to a finite original signal **1701** sectioned by a block such as shown in (*a*) of FIG. **18**, the original signal **1701** is connected in even symmetry with respect to the axis (corresponding to the ordinate) that is either side of the block border, here, on the right side of the original signal **1701** in (*a*) of FIG. **18**, thus a cyclical waveform signal of the original signal **1701** being obtained, as shown in (*b*) of FIG. **18**. Connection in even symmetry here means that the original signal **1701** in (*a*) of FIG. **18** is folded to become an even symmetrical (line symmetrical) signal, such as shown in (*b*) of FIG. **18**.

Conversion of the original signal **1701** to such a cyclical waveform signal enables representation with DCT series, such as shown in (*c*) of FIG. **18**. Generally, connection in even symmetry to the original signal **1701** causes generation of signal components with insufficient smoothness, as indicated by dot sections **1801** to **1803**. This affects the DCT series shown in (*c*) of FIG. **18** in that DCT coefficients, each corresponding to the levels of the DCT series, cannot converge enough even in a high-frequency component range, such as indicated by a dot section **1804** in (*c*) of FIG. **18**, due to contamination of signal components different from those primarily included in the original signal. Quantization and entropy coding to such DCT coefficients thus generate a substantial amount of codes.

FIG. **19** illustrates typical DCT to the residual signal **1707** in (*c*) of FIG. **17**. As explained with reference to FIG. **17**, the estimated signal **1706** such as shown in (*b*) of FIG. **17** is generated by PHLCT, and then the difference between the estimated signal **1706** and the original signal **1701** shown in (*a*) of FIG. **17** is taken, thus the residual signal **1707** such as shown in (*c*) of FIG. **17** and (*a*) of FIG. **19** is obtained. The residual signal **1707** is then connected in even symmetry with respect to the axis, here, on the right side of the signal, thus a

cyclical waveform signal of the residual signal **1707** being obtained, as shown in (*b*) of FIG. **19**.

The cyclical waveform signal of the residual signal **1707** thus obtained has signal components with higher smoothness, at dot sections **1901** to **1903** each connecting a signal component of a former cycle to that of a latter cycle, than the cyclical waveform signal of the original signal **1701** at the corresponding dot sections **1801** to **1803**, with being protected from contamination of unnecessary signal components primary not included in the original signal. Then, DCT to the cyclical waveform signal of the residual signal **1707** shown in (*b*) of FIG. **19**, as a discrete cyclical waveform, gives a string of DCT coefficients, or residual orthogonal transform coefficients (here, residual DCT coefficients data), as indicated by I in (*c*) of FIG. **19**. When the residual DCT coefficients data indicated by I in (*c*) of FIG. **19** are compared with the string of DCT coefficients through typical DCT indicated by II in (*c*) of the same figure, the DCT coefficients of the former are suppressed enough in a high-frequency range as indicated by a dot section **1904** (*c*) of FIG. **19**, thus being converged into DCT coefficients having lower frequency components.

Accordingly, in the first embodiment, quantization and entropy coding are performed to DCT coefficients of a residual signal that is a difference between an original signal and an estimated signal derived from the gradient of a block border of the original signal through PHLCT. Therefore, according to the first embodiment, higher suppression of code amount is achieved compared to coding with typical DCT to the original signal, which leads to enhancement of coding efficiency.

As disclosed, according to the first embodiment, the estimated signal **1706** such as shown in (*b*) of FIG. **17** is generated by the zone-border motion compensator **119** through PHLCT as a predictive signal on a block border of each block. This predictive signal is generated based on boundary conditions around a block to be coded in a picture to be coded, determined by the zone-border motion estimator **118** as the closest to the gradient of a video signal. This makes the gradients on both ends of the residual signal **1707** are closer to zero as shown in (*c*) of FIG. **17**, which is the difference between the estimated signal **1706** on block borders of each block and the original signal **1701** that is the input signal **101**, which leads to expectation of the effects discussed above given by orthogonal transform at the orthogonal transformer **107**.

The following is an exemplary scheme in generation of a predictive signal at the zone-border motion compensator **119**.

A video signal of a moving-picture frame with blocks shown in FIG. **20** and expressed by an expression (1) is given to an input moving-picture frame.

$$\Omega^{(s,t)}:=\{f_{i,j}^{s,t}:=f(x_i+s,y_j+t),i,j=0,1,\ldots,N-1\} \tag{1}$$

Suppose that $\Omega^{(0,0)}$ in FIG. **20** is a block to be processed currently. Each pixel in respective blocks is expressed by an expression (2).

$$\left.\begin{aligned} x_i &= (0.5+i)/N \\ y_j &= (0.5+j)/N \end{aligned}\right\},\quad i,j=0,1,\ldots,N-1 \tag{2}$$

A gradient of a video signal, or a boundary condition, is expressed with DCT series so that it can be treated in the frequency domain. Here, a gradient "g" of a video signal is expressed with DCT series, such as G_k in an expression (3) for use in expansion of DCT series of a boundary condition.

$$g^{(1)}(t):=\sqrt{\frac{2}{N}}\sum_{k=0}^{N-1}\lambda_k G_k^{(1)}\cos\pi kt = \sqrt{\frac{2}{N}}\left(\frac{G_0^{(1)}}{\sqrt{2}}+\sum_{k=1}^{N-1}G_k^{(1)}\cos\pi kt\right) \tag{3}$$

Obtained next is an estimated signal in a block to an original signal with the concept of Poisson's Equation. Poisson's Equation gives an expression (4) between a source term Kj and Δuj that is Laplacian of an estimated signal "u" in a block Qj to be processed.

$$\Delta uj=Kj \tag{4}$$

The estimated signal "u" in a block can be expressed as an expression (5) with Neumann's boundary condition and DCT series representation, which is given by addition of DCT-series expanded components of the estimated signal from each border, as indicated by an expression (6).

$$\begin{aligned} u(x,y) &= u^{(1)}(x,y)+u^{(2)}(x,y)+u^{(3)}(x,y)+u^{(4)}(x,y) \\ &= \sqrt{\frac{2}{N}}\sum_{k=1}^{N-1}\lambda_k\{(G_k^{(1)}\psi_k(y-1)+G_k^{(2)}\psi_k(y))\cos\pi kx + \\ &\quad (G_k^{(3)}\psi_k(x))\cos\pi ky\}+C, \end{aligned}$$

in which C is a constant, and

$$\psi_k(t)=\begin{cases}\dfrac{t^2}{2} & \cdots\ k=0\\ \dfrac{\cosh\pi kt}{\pi k\sinh\pi k} & \cdots\ k\neq 0\end{cases} \tag{5}$$

$$u^{(1)}(x,y):=\sqrt{\frac{2}{N}}\left(\frac{G_0^{(1)}}{\sqrt{2}}\frac{(y-1)^2}{2}+\sum_{k=1}^{N-1}G_k^{(1)}\frac{\cosh\pi k(y-1)}{\pi k\sinh\pi k}\cos\pi kx\right) \tag{6}$$

The zone-border motion compensator **119** in the first embodiment obtains a predictive signal (an estimated signal) with u(x, y) according to the expression (5). This predictive signal (estimated signal) generation method is just an example, and hence the present invention is not limited to this generation method. In other words, u(x, y) can be obtained by any higher-speed calculation method that satisfies Δuj=Kj.

Disclosed next with reference to a flowchart in FIG. **2** is an operation of the first embodiment of the moving-picture coding apparatus according to the present invention.

A picture to be coded is input as the input signal **101**, which is a frame or a field to be coded of a moving picture (step S**101**).

The coding controller **117** then determines whether the current coding mode in the coding apparatus is intra coding or not (step S**102**).

If intra coding (YES in step S**102**), the coding controller **117** supplies the parameter data required for intra coding to the respective component parts of the coding apparatus, and turns the switch **102** to the terminal "b" and the switch **103** to the terminal "b" for intra coding, which is followed by intra

prediction at the intra predictor **105** (step S**103**). Then, the procedure moves to step S**106**.

On the contrary, If not intra coding (NO in step S**102**), the coding controller **117** supplies the parameter data required for inter coding to the respective component parts of the coding apparatus, and turns the switch **102** to the terminal "a" and the switch **103** to the terminal "a" for inter coding. Then, the zone-border motion estimator **118** receives the picture to be coded input as the input signal **101** and a reference picture stored in the frame memory **104**, to perform the zone-border motion estimation discussed above (step S**104**), thus generating border motion-vector data. The generated border motion-vector data is supplied to the zone-border motion compensator **119** and the entropy encoder **113**.

The zone-border motion compensator **119** receives the border motion-vector data from the zone-border motion estimator **118** and the reference picture from the frame memory **104**, to perform the zone-border motion compensation discussed above (step S**104**), thus producing the first predictive picture. The first predictive picture is supplied to the terminal "a" of the switch **103** and the first subtractor **120**. Then, the procedure moves to step S**106**.

After a predictive picture is produced at the intra predictor **105** or the zone-border motion compensator **119**, a difference is taken between the picture to be coded and the predictive picture (step S**106**), thus producing a residual picture.

When the coding mode is intra coding (YES in step S**102**), the second subtractor **106** receives the picture to be coded, the input signal **101**, and the fourth predictive picture produced by the intra predictor **105**, and takes a difference (subtraction) between the picture to be coded and the fourth predictive picture, to produce the second residual picture which is then supplied to the terminal "b" of the switch **2**.

When the coding mode is inter coding (NO in step S**102**), the first subtractor **120** receives the picture to be coded, the input signal **101**, and the first predictive picture produced by the zone-border motion compensator **119**, and takes a difference (subtraction) between the picture to be coded and the first predictive picture, to produce the first residual picture which is then supplied to the terminal "a" of the switch **102**.

When the first or the second residual picture is produced, the orthogonal transformer **107** receives the residual picture from the switch **102** and performs orthogonal transform to the residual picture (step S**107**). The orthogonal transform is DCT in MPEG-1, MPEG-2 or MPEG-4 whereas integer DCT and Hadamard transform in AVC. DCT is orthogonal transform to discretely transform cosine-based integral transform into finite space. In MPEG-1, MPEG-2 or MPEG-4, two-dimensional DCT is performed to a DCT block of 8 pixels in the horizontal direction and 8 pixels in the vertical direction, a specific rectangular zone divided into 4 from a macroblock. In AVC, two-dimensional integer DCT and Hadamard transform DCT are performed to a block of 4 pixels in the horizontal direction and 4 pixels in the vertical direction. Since a video signal generally has many low-frequency components but few high-frequency components, DCT to the video signal makes coefficients converge to the low-frequency components, which efficiently suppressing the code amount at the subsequent processing at the quantizer **108**. The procedure generates orthogonal-transform coefficients data (here, DCT coefficients data) which are then supplied to the quantizer **108**.

The quantizer **108** quantizes the DCT coefficients data based on a specific quantization parameter (step S**108**). The quantization is performed by dividing the DCT coefficients by quantization values which consists of a quantization matrix and values obtained by multiplying the quantization matrix by a quantization scale for scalar multiplication of the entire matrix. In MPEG-1, MPEG-2 or MPEG-4, a quantization matrix has values of two-dimensional frequency, of 8 pixels in the horizontal direction and 8 pixels in the vertical direction, weighed by visual characteristics. In AVC, a quantization matrix has values of two-dimensional frequency, of 4 pixels in the horizontal direction and 4 pixels in the vertical direction, weighed by visual characteristics. In inverse-quantization at decoder, multiplication with the quantization values gives values similar to the original DCT coefficients. Accordingly, post-quantization data are generated and supplied to the inverse-quantizer **109** and the entropy encoder **113**.

The inverse-quantizer **109** performs inverse-quantization to the post-quantization data (step S**109**) based on a specific quantization parameter (step S**109**). Accordingly, post-inverse-quantization data are generated and supplied to the inverse-orthogonal transformer **110**. The inverse-orthogonal transformer **110** performs inverse-orthogonal transform to the post-inverse-quantization data (step S**110**). Accordingly, a decoded residual picture is produced and supplied to the first combiner **111**.

The first combiner **111** receives the decoded residual picture from the inverse-orthogonal transformer **110** and the first or the fourth predictive picture from the switch **103** and combines the decoded residual picture and the predictive picture (step S**111**). Accordingly, a decoded picture is produced and supplied to the deblocking filter **112**. The decoded picture is also supplied to the intra predictor **105** when the encoding mode is intra coding.

The deblocking filter **112** receives the decoded picture from the first combiner **111** and performs a deblocking filtering procedure (step S**112**). The decoded picture thus deblocking-filtered is then stored in the frame memory **104** as a reference picture for the succeeding coding.

Thereafter, in order to output a string of post-encoding data, the entropy encoder **113** receives at least the post-quantization data from the quantizer **108** and the border motion-vector data from the zone-border motion estimator **118** and performs entropy coding (step S**114**), thus generating coded bit strings. The entropy encoder **113** may also perform entropy coding to several types of parameter data used in encoding received from the respective component parts of the coding apparatus. The generated coded bit strings are supplied to the multiplexer **114**. Entropy coding is typically VLC (Variable Length Coding) to perform variable length coding to quantized data. Performed in variable length coding is Huffman coding with zigzag scanning of DCT coefficients from low to high ranges and allocating a shorter code to an event of zero-run length and an effective coefficient value with higher probability. The entropy encoder **113** may perform arithmetic coding, instead of Huffman coding, for higher data compression. AVC employs CAVLC (Context-Adaptive Variable Length Coding) and CABAC (Context-Adaptive Binary Arithmetic Coding) in entropy coding for higher efficiency.

The multiplexer **114** receives the bit strings from the entropy encoder **113** and multiplexes them based on the specific syntactic structure (step S**115**), thus generating a coded bitstream. The bitstream (multiplexed bitstream) is then supplied to the output transferer **115**. The multiplexed bitstream is subjected to a packetization procedure and other procedures, if any, at the output transferer **115** and output as the output signal **116**.

The procedures from step **S101** to **S116** are performed to complete a coding procedure for a picture to be coded at a certain moment at the coding apparatus in the first embodiment.

The output signal **116** output as described above is delivered as a coded bitstream through transfer via a storage medium, a network, etc., and reproduced at a terminal. In reproduction at a terminal, the delivered coded bitstream is reproduced after decoded by a decoder of the terminal.

Accordingly, in the moving-picture coding apparatus and method of the first embodiment, the zone-border motion estimator **118** and the zone-border motion compensator **119** perform the zone-border motion estimation and zone-border motion compensation, discussed above. Thus, the apparatus and method achieve production of predictive pictures that are smoother on block borders than those produced by known art with smooth filtering to predictive pictures produced through motion estimation and compensation with block matching, and hence achieve production of high-quality residual pictures, which leads to higher coding efficiency.

Moreover, according to the moving-picture coding apparatus and method of the first embodiment, motion-vector search is performed on each side of a rectangular zone to the gradient of a video signal that is a boundary condition for each side of the rectangular zone, to generate motion-vector data on each border. This procedure enables production of predictive pictures of higher quality than known motion compensation, based on the gradient of a video signal determined by respective border motion-vector data corresponding to respective sides of a rectangular zone, thus enhancing coding efficiency.

Disclosed next with reference to FIGS. **3** and **4** is the first embodiment of the moving-picture decoding apparatus that receives and decodes a coded bitstream generated by the first embodiment of the moving-picture coding apparatus of the present invention or a computer that runs on a first coding program that achieves this embodiment of the moving-picture coding apparatus with software which will be described later.

FIG. **3** shows a block diagram of the first embodiment of the moving-picture decoding apparatus according to the present invention. As shown in FIG. **3**, the decoding apparatus in this embodiment is equipped at least with a switch **302**, an input receiver **303**, a demultiplexer **304**, an entropy decoder **305**, an inverse-quantizer **306**, an inverse-orthogonal transformer **307**, a first combiner **309**, a frame memory **311**, a decoding controller **313**, and a zone-border motion compensator **314**. Moreover, it is preferable for the decoding apparatus to be equipped with an intra predictor **308** and a deblocking filter **310**, as shown in FIG. **3**.

The switch **302** switches a picture between a fourth predictive picture sent to a terminal "a" from the intra predictor **308** and a first predictive picture sent to a terminal "b" from the zone-border motion compensator **314**, in response to an instruction from the decoding controller **313**, to supply the selected predictive picture to the first combiner **309**.

The input receiver **303** performs a packetization procedure to a coded bitstream (an input signal **301**) supplied via a transfer line or a storage medium (either not shown), to obtain packet data. Moreover, the input receiver **303** performs a packet combining procedure to the packet data to generate a coded bitstream which is then supplied to the demultiplexer **304**.

The demultiplexer **304** demultiplexes the coded bitstream based on a specific syntactic structure to generate coded bit strings which are then supplied to the entropy decoder **305**.

The entropy decoder **305** performs entropy decoding to the coded bit strings to obtain at least post-quantization data and border motion-vector data. Here, it is preferable for the entropy decoder **305** to obtain other parameter data, for example, required for constructing a specific syntactic structure, by entropy decoding to the coded bit strings. Entropy decoding is typically inverse-VLC for variable length coding to demultiplexed data. When AVC is employed, variable length coding is performed with inverse-AVLC or -CABAC.

The parameter data required for constructing such a specific syntactic structure may preferably include macroblock data indicating kinds of state of a macroblock, quantization parameter data for use in quantization and inverse-quantization, intra-mode data for specifying a mode of intra prediction, frame-order data for specifying the order of referring to reference video frames, etc.

The post-quantization data and the border motion-vector data are supplied from the entropy decoder **305** to the inverse-quantizer **306** and the zone-border motion compensator **314**, respectively.

The inverse-quantizer **306** performs inverse-quantization to the post-quantization data based on a specific quantization parameter to generate post-inverse-quantization data which are then supplied to the inverse-orthogonal transformer **307**. The inverse-orthogonal transformer **307** performs inverse-orthogonal transform to the post-inverse-quantization data to produce a decoded residual picture. The inverse-orthogonal transform is IDCT (Inverse-Discrete Cosine Transform) in MPEG-1, MPEG-2 or MPEG-4. In AVC, integer IDCT and Hadamard transform are used.

The first combiner **309** receives the decoded residual picture from the inverse-orthogonal transformer **307** and the predictive picture from the switch **302**. It combines the decoded residual picture and the predictive picture to produce a decoded picture which is then supplied to the intra predictor **308** and the deblocking filter **310**.

The frame memory **311** receives a decoded picture from respective component parts of the decoding apparatus to store it as a reference picture. In FIG. **3**, the frame memory **311** receives a decoded picture from the deblocking filter **310** after deblocking filtering. The frame memory **311** supplies a required reference picture to any component parts of the decoding apparatus. In FIG. **3**, the reference picture is supplied from the frame memory **311** to the intra predictor **308** and the zone-border motion compensator **314**. Moreover, the frame memory **311** outputs the decoded picture as an output signal according to need by a display apparatus (not shown).

The decoding controller **313** supplies, at least, several types of parameter data required for decoding to the respective component parts of the decoding apparatus in control of the operation of the decoding apparatus in this embodiment, controls input/output of the component parts, and controls the switch **302** (connection for supplying the parameter data is omitted from FIG. **3**).

The zone-border motion compensator **314** receives the border motion-vector data from the entropy decoder **305** and the reference picture from the frame memory **311**. It performs zone-border motion compensation to determine a gradient of a video signal in each side of a block, required for producing an estimated signal in block, based on the border motion-vector data, apply the gradient thus found to Poisson's Equation to generate a predictive signal in block that is a predictive signal per block in a picture, thus producing a first predictive picture. The produced first predictive picture is supplied to a terminal "b" of the switch **302**.

The intra predictor **308** receives the decoded picture from the first combiner **309** and produces a fourth predictive picture through intra prediction. A picture to be used in intra

prediction may be sent from the frame memory **311**. The produced fourth predictive picture is supplied to a terminal "a" of the switch **302**.

The deblocking filter **310** receives the decoded picture from the first combiner **309** and, after performing a deblocking filtering procedure, supplies the decoded picture thus deblocking-filtered to the frame memory **311**.

Disclosed next with reference to a flowchart in FIG. **4** is an operation of the first embodiment of the moving-picture decoding apparatus shown in FIG. **3**.

The input receiver **303** receives coded data by sequentially receiving specific packet data as the input signal **301** via a transfer line or a storage medium (step S**201**). Moreover, the input receiver **303** performs a packet combining procedure to the packet data to reconstruct a coded bitstream which is then supplied to the demultiplexer **304**.

The demultiplexer **304** performs demultiplexing of the coded data from the coded bitstream based on a specific syntactic structure (step S**202**), and supplies coded bit strings, post-demultiplex data, to the entropy decoder **305**.

The entropy decoder **305** performs entropy decoding to the coded bit strings (step S**203**) to obtain post-quantization data, border motion-vector data, and other parameter data, for example, required for constructing a specific syntactic structure. The post-quantization data and the border motion-vector data are supplied to the inverse-quantizer **306** and the zone-border motion compensator **314**, respectively.

The decoding controller **313** then determines whether the current decoding mode in the decoding apparatus is intra decoding or not (step S**204**). If intra decoding (YES in step S**204**), the decoding controller **313** supplies the parameter data required for intra decoding to the respective component parts of the decoding apparatus. Moreover, the decoding controller **313** turns the switch **302** to the terminal "a" for intra decoding, which is followed by intra prediction at the intra predictor **308** (step S**205**). Then, the procedure moves to step S**207**.

On the contrary, if not intra decoding (NO in step S**204**), the decoding controller **313** supplies the parameter data required for inter decoding to the respective component parts of the decoding apparatus. Moreover, the decoding controller **313** turns the switch **302** to the terminal "b" for inter decoding. Then, the zone-border motion compensator **314** receives the border motion-vector data from the entropy decoder **305** and the corresponding reference picture from the frame memory **311**, to perform zone-border motion compensation (step S**206**), thus producing the first predictive picture. The produced first predictive picture is supplied to the terminal "b" of the switch **302**. Then, the procedure moves to step S**207**.

The inverse-quantizer **306** receives the post-quantization data from the entropy decoder **305** and performs inverse-quantization to the data based on a specific quantization parameter (step S**207**), to generate post-inverse-quantization data which are then supplied to the inverse-orthogonal transformer **307**.

The inverse-orthogonal transformer **307** performs inverse-orthogonal transform to the post-inverse-quantization data (step S**208**), to produce a decoded residual picture which is supplied to the first combiner **309**. The first combiner **309** combines the decoded residual picture and the predictive picture from the switch **302** to produce a decoded picture (step S**209**). The produced decoded picture is supplied to the deblocking filter **310**. The decoded picture is also supplied to the intra predictor **308** when the decoding mode is intra decoding.

The deblocking filter **310** receives the decoded picture from the first combiner **309** and performs a deblocking filtering procedure (step S**210**). Produced here is a deblocking-filtered decoded picture which is then stored in the frame memory **311** as a reference picture for the succeeding coding (step S**211**).

The frame memory **311** receives and stores the deblocking-filtered decoded picture as a reference picture and supplies the reference picture to the intra predictor **308** and the zone-border motion compensator **314** in need. It is preferable for the frame memory **311** to store at least one or more of reference pictures and supply a required reference picture to any component parts of the decoding apparatus. Moreover, the frame memory **311** outputs a decoded video frame at a display timing for a decoded picture (step S**212**). The decoded video frame is output to an external display apparatus (not shown) as an output signal **312** necessary for displaying.

Thereafter, if there is another coded bitstream to be decoded and decoding is necessary, the procedure returns to step S**201** to continue the decoding procedure whereas if decoding is not necessary, the decoding procedure is finished.

Accordingly, in the moving-picture decoding apparatus and method of the first embodiment, decoding is performed after the zone-border motion compensator **314** performs zone-border motion compensation to the input signal that is a coded bitstream subjected to the zone-border motion estimation and zone-border motion compensation, discussed above, with coding parameters and border motion-vector data. Therefore, the moving-picture decoding apparatus and method of the first embodiment can correctly decode a bitstream coded with a residual signal (picture) obtained by means of an estimated signal based on a block-border boundary condition through zone-border motion estimation and zone-border motion compensation, thus producing high-quality decoded videos with a fewer code amount overall.

Embodiment II

Disclosed next are second embodiments of a moving-picture coding apparatus and a moving-picture decoding apparatus according to the present invention.

FIG. **5** shows a block diagram of the second embodiment of the moving-picture coding apparatus according to the present invention. In the figure, the component parts analogous to those in FIG. **1** are given the same reference numerals, with detailed explanation thereof being omitted. In addition to the component parts analogous to those of the moving-picture coding apparatus of FIG. **1**, the moving-picture coding apparatus in this embodiment is equipped a switch **501**, a motion estimator **502**, a motion compensator **503**, and a residual determiner **504**, for motion estimation and compensation in H. 264/AVC.

There are three prediction modes in AVC: intra predictive coding, forward predictive coding, and bidirectional predictive coding.

In intra predictive coding, orthogonal transform is performed at the orthogonal transformer **107**, after utilizing intra data and intra-based predictive data at the intra predictor **105***a*, without the output of the motion compensator **503**. A picture coded in this mode is referred to as an I picture. The I picture can be decoded without relying on other pictures in decoding. A single I picture can include several slices in AVC. Nevertheless, in the following description, it is defined that a single I picture consists of one slice, for expediency.

In forward predictive coding, an already coded picture is motion compensated at the motion compensator **503** for coding of a picture to be coded currently. Difference is taken

between a predictive picture produced in this prediction and a picture to be coded as an input signal **101** to produce a residual picture which is then subjected to orthogonal transform at the orthogonal transformer **107**. Orthogonal transform at the orthogonal transformer **107** is DCT (Discrete Cosine Transform) in MPEG-1, MPEG-2 or MPEG-4. The orthogonal transform can be performed with another transform basis such as Hadamard or wavelet basis. In AVC, integer DCT and Hadamard transform are used for orthogonal transform. A picture coded in the forward predictive mode is referred to as a P picture. The P picture relies on other pictures, and hence cannot be decoded independently like the I picture, notwithstanding, can be compressed at a lower bit rate than the I picture.

In bidirectional predictive coding, prediction is performed to a picture to be coded currently, with motion compensation of any two directions (ordinarily two pictures), not only bidirectional of past and future at the motion compensator **503**. Difference is taken between a predictive picture produced in this prediction and a picture to be coded as an input signal **101** to produce a residual picture which is then subjected to orthogonal transform at the orthogonal transformer **107**. A picture coded in the bidirectional predictive mode is referred to as a B picture. The B picture relies on other past or future pictures, and hence cannot be decoded independently like the I picture, notwithstanding, can be compressed at a further lower bit rate than the I and B pictures.

Each frame and slice is subjected to a prediction procedure per macroblock of 16 pixels in the horizontal direction and 16 pixels in the vertical direction. It may be divided further into smaller blocks or subblocks for a prediction procedure. It is defined that a prediction procedure is performed for each block of 8 pixels in the horizontal direction and 8 pixels in the vertical direction, in the following description, for expediency.

The direction of prediction is different among the I, P or B pictures. The I picture is subjected to coding independently for all macroblocks. The P picture is subjected to two coding modes: coding with prediction from a past picture; and coding a macroblock independently with no prediction. The B picture is subjected to four coding modes: coding with prediction from future; coding with prediction from past; coding with prediction from future and past; and coding a macroblock independently with no prediction.

Motion estimation is performed at the motion estimator **502** with block matching at ½-pixel or ¼-pixel accuracy to each block of a picture to be coded, to find out a zone with the smallest error in a reference picture, thus generating motion data. Here, the motion data consists of at least vector data, obtained by pattern matching, for specifying a spatial position to a zone corresponding to each block, and reference-picture data for specifying a reference picture. Motion compensation is performed at the motion compensator **503** to produce a predictive picture from the reference picture, based on the motion data estimated by the motion estimator **502**.

The switch **501** is provided with a fourth predictive picture produced by the intra predictor **105***a* at a terminal "b" and a second predictive picture produced by the motion compensator **503** at a terminal "a". The switch **501** selects either one of the second and fourth predictive pictures under control by a coding controller **117***a* and supplied the selected predictive picture to the terminal "b" of the switch **103** and a second subtractor **106***a*. The motion estimator **502** receives a picture to be coded of a moving picture as the input signal **101** and also the corresponding reference picture from the frame memory **104** and performs motion estimation to generate motion-vector data. The motion estimation, like ordinary motion estimation such as AVC, conducts motion-vector search in the reference picture through block matching with respect to each zone in the picture to be coded, to generate motion-vector data that indicates a matched block zone. Then, the motion estimator **502** supplies the generated motion-vector data to the motion compensator **503** and an entropy encoder **113***a*. The motion compensator **503** receives the motion-vector data from the motion estimator **502** and the corresponding reference picture from the frame memory **104**. Then, the motion compensator **503** finds out the corresponding block zone in the reference picture based on the motion-vector data to produce a second predictive picture which is then supplied to the terminal "a" of the switch **501**.

The residual determiner **504** receives a second residual picture produced by taking a difference between a second or a fourth predictive picture and a picture to be coded (the input picture **101**) at the second subtractor **106***a*, and also receives a first residual picture produced by taking a difference between a first predictive picture and the picture to be coded (the input picture **101**) at the first subtractor **120**. Moreover, the residual determiner **504** receives border motion-vector data from the zone-border motion estimator **118** and motion-vector data from the motion estimator **502**.

Then, the residual determiner **504** determines as to whether to employ the first residual picture from the first subtractor **120** or the second residual picture from the second subtractor **106***a*, based on specific determination criteria. Under feasible determination criteria, the coded amount of the received first and second residual pictures are compared and the residual picture of a smaller coded amount is selected. Under more feasible determination criteria, the coded amount of the first residual picture and motion-vector data, and the coded amount of the second residual picture and motion-vector data are compared and the residual picture of a smaller coded amount is selected. The residual determiner **504** then supplies residual determination data indicating which of the first or the second residual picture is selected to a coding controller **117***a* and an entropy encoder **113***a*.

The coding controller **117***a* controls switching at the switch **102** based on the residual determination data supplied from the residual determiner **504**, for switching control of the residual picture to be supplied to an orthogonal transformer **107**, in addition to the functions of the coding controller **117** in FIG. **1**. Moreover, the coding controller **117***a* controls switching at the switch **103** based on the residual determination data, for switching control of the predictive picture, used for producing the residual picture thus selected, to be supplied to a first combiner **111**. Furthermore, the coding controller **117***a* controls switching at the switch **501** according to the coding mode.

The intra predictor **105***a* supplies a produced fourth picture to a terminal "b" of the switch **501**. The signal selected by the switch **501** is supplied to the terminal "b" of the switch **103**. The second subtractor **106***a* receives a picture to be coded of a moving picture, the input signal **101**, and the second predictive picture or the fourth predictive picture from the switch **501**. The second predictive picture is a picture produced by the motion compensator **503**. The fourth predictive picture is a picture produced by the intra predictor **105***a*. The second subtractor **106***a* performs calculation of difference between the picture to be coded and the second or the fourth predictive picture to produce a second residual picture which is then supplied to the terminal "b" of the switch **102** and the residual determiner **504**.

The entropy encoder **113***a* receives the motion-vector data from the motion estimator **502** and the residual determination

data from the residual determiner **504**, for entropy encoding, in addition to the functions of the entropy encoder **113** in FIG. **1**.

Disclosed next with reference to a flowchart in FIG. **6** is an operation of the second embodiment of the moving-picture coding apparatus shown in FIG. **5**.

A picture to be coded is input as the input signal **101**, which is a frame or a field to be coded of a moving picture (step S**301**). The coding controller **117***a* then determines whether the current coding mode in the coding apparatus is intra coding or not (step S**302**).

If intra coding (YES in step S**302**), the coding controller **117***a* supplies parameter data required for intra coding to the respective component parts of the coding apparatus, and turns the switch **102** to the terminal "b" and the switch **103** to the terminal "b" for intra coding, which is followed by intra prediction at the intra predictor **105***a* (step S**303**). Then, the procedure moves to step S**308**.

On the contrary, If not intra coding (NO in step S**302**), the coding controller **117***a* supplies parameter data required for inter coding to the respective component parts of the coding apparatus, and turns off the switches **102** and **103**, and turns the switch **501** to the terminal "a" for inter coding.

Then, the zone-border motion estimator **118** receives the picture to be coded input as the input signal **101** and a reference picture stored in the frame memory **104**, to perform zone-border motion estimation (step S**304**). Border motion-vector data thus generated is then supplied to the zone-border motion compensator **119** and the entropy encoder **113***a*.

The zone-border motion compensator **119** receives the border motion-vector data from the zone-border motion estimator **118** and the corresponding reference picture from the frame memory **104**, to perform zone-border motion compensation (step S**305**). The first predictive picture thus produced is then supplied to the terminal "a" of the switch **103** and the first subtractor **120**.

The motion estimator **502** receives the picture to be coded supplied as the input signal **101** and the reference picture stored in the frame memory **104**, to perform motion estimation (step S**306**). Motion-vector data thus generated is supplied to the motion compensator **503** and the entropy encoder **113***a*.

The motion compensator **503** receives the motion-vector data from the motion estimator **502** and the corresponding reference picture stored in the frame memory **104**, to perform motion compensation (step S**307**). The second predictive picture thus produced is then supplied to the terminal "a" of the switch **501**. Then, the procedure moves to step S**308**.

After the predictive picture is produced by the intra predictor **105***a* or the zone-border motion compensator **119** and the motion compensator **503**, calculation of difference is performed between the picture to be coded and the predictive picture (step S**308**) to produce a residual picture.

If intra coding (YES in step S**302**), the second subtractor **106***a* receives the picture to be coded, the input signal **101**, and the fourth predictive picture produced by the intra predictor **105***a* via the switch **501** already turned to the terminal "b", to perform calculation of difference (subtraction) between the pictures, thus producing the second residual picture which is then supplied to the terminal "b" of the switch **102** and the residual determiner **504**.

If inter coding (NO in step S**302**), the second subtractor **106***a* receives the picture to be coded, the input signal **101**, and the second predictive picture produced by the motion compensator **503** via the switch **501** already turned to the terminal "a", to perform calculation of difference (subtraction) between the pictures, thus producing the second residual picture which is then supplied to the terminal "b" of the switch **102** and the residual determiner **504** (step S**306** and S**307**).

The first subtractor **120** receives the picture to be coded, the input signal **101**, and the first predictive picture produced by the zone-border motion compensator **119**, to perform calculation of difference (subtraction) between the pictures, thus producing the first residual picture which is then supplied to the terminal "a" of the switch **102** and the residual determiner **504** (step S**304** and S**305**). Either of the procedure in steps S**304** and S**305** and the procedure in steps S**306** and S**307** may be executed first or both may be executed simultaneously.

Then, the residual determiner **504** determines as to whether to employ the first residual picture from the first subtractor **120** or the second residual picture from the second subtractor **106***a*, based on specific determination criteria (step S**309**), thus selecting a residual picture to be supplied to the orthogonal transformer **107**. The residual determiner **504** then supplies residual determination data indicating which of the first or the second residual picture is selected to the coding controller **117***a* and the entropy encoder **113***a*.

When the residual determination data is supplied to the coding controller **117***a* from the residual determiner **504**, the coding controller **117***a* controls encoding with switching via the switches **102** and **103**. When it is found from the residual determination data that the first residual picture is selected, the coding controller **117***a* turns the switch **102** to the terminal "a" and the switch **103** to the terminal "a". In contrast, when it is found from the residual determination data that the second switch **102** to the terminal "b" and the switch **103** to the terminal "b". Thereby, the residual picture selected via the switch **102** is supplied to the orthogonal transformer **107** and the predictive picture selected via the switch **103** is supplied to the first combiner **111**.

The orthogonal transformer **107** receives the residual picture selected via the switch **102** and performs orthogonal transform (step S**310**). Orthogonal-transform coefficients data (here, DCT coefficients data) thus generated are supplied to the quantizer **108**. The quantizer **108** quantizes the DCT coefficients data based on a specific quantization parameter (step S**311**). Post-quantization data thus generated are supplied to the inverse-quantizer **109** and the entropy encoder **113***a*.

The inverse-quantizer **109** receives the post-quantization data from the quantizer **108** and performs inverse-quantization based on a specific quantization parameter (step S**312**). Post-inverse-quantization data thus generated are supplied to the inverse-orthogonal transformer **110**. The inverse-orthogonal transformer **110** performs inverse-orthogonal transform to the post-inverse-quantization data (step S**313**). A decoded residual picture thus produced is then supplied to the first combiner **111**.

The first combiner **111** receives the decoded residual picture from the inverse-orthogonal transformer **110** and the predictive picture from the switch **103** and combines them (step S**314**), to produce a decoded picture which is then supplied to the deblocking filter **112**. The decoded picture is also supplied to the intra predictor **105***a* when the encoding mode is intra coding.

The deblocking filter **112** receives the decoded picture from the first combiner **111** and performs a deblocking filtering procedure (step S**315**). The decoded picture thus deblocking-filtered is then stored in the frame memory **104** as a reference picture for the succeeding coding (step S**316**).

Thereafter, in order to output a string of coded data, the entropy encoder **113***a* receives at least the post-quantization data from the quantizer **108**, the border motion-vector data

from the zone-border motion estimator **118**, the motion-vector data from the motion estimator **502**, and the residual determination data from the residual determiner **504** and performs entropy coding (step S**317**), thus generating coded bit strings. The entropy encoder **113** may also perform entropy coding to several types of parameter data used in encoding received from the respective component parts of the coding apparatus. The generated coded bit strings are supplied to the multiplexer **114**.

The multiplexer **114** receives the bit strings from the entropy encoder **113***a* and multiplexes them based on the specific syntactic structure (step S**318**). A coded bitstream thus generated is then supplied to the output transferer **115**. The output transferer **115** receives the multiplexed bitstream and performs a packetization procedure and other procedures, if any, and then outputs coded data to a transfer line or a storage medium (step S**319**). The procedures from step S**101** to S**116** are performed to complete a coding procedure for a picture to be coded at a certain moment at the coding apparatus in this embodiment.

Accordingly, in the moving-picture coding apparatus and method of the first embodiment, the motion estimator **502** and the motion compensator **503** perform ordinary motion estimation and motion compensation to generate a predictive signal and obtain a residual signal (a residual picture) between the predictive signal and the input signal **101**, and in addition, the zone-border motion estimator **118** and the zone-border motion compensator **119** perform the zone-border motion estimation and zone-border motion compensation, discussed above, like the first embodiment, to generate an estimated signal based on a boundary condition on a block border and obtain a residual signal (a residual picture) between the estimated signal and the input signal **101**, followed by the residual determiner **504** to compare the data amount of the residual signal from the first subtractor **120** and that of the second subtractor **120** and select the residual signal (residual picture) of smaller data amount. Thus, according to the apparatus and method in the second embodiment, when the data amount obtained by means of an estimated signal based on a boundary condition on a block border is larger than the data amount of a predictive signal obtained by ordinary motion estimation and motion compensation, the residual signal (the residual picture) selected is the one obtained by taking a difference between predictive signal obtained by ordinary motion estimation and motion compensation and a picture to be coded, thus overall code amount becomes smaller for a higher quality coded videos and higher coding efficiency.

Disclosed next with reference to FIGS. **7** and **8** is the second embodiment of the moving-picture decoding apparatus that receives and decodes a coded bitstream generated by the second embodiment of the moving-picture coding apparatus of the present invention or a computer that runs on a second coding program that achieves this embodiment of the moving-picture coding apparatus with software which will be described later.

FIG. **7** shows a block diagram of the second embodiment of the moving-picture decoding apparatus according to the present invention. In the figure, the component parts analogous to those in FIG. **3** are given the same reference numerals, with detailed explanation thereof being omitted. In addition to the component parts analogous to those of the moving-picture decoding apparatus of FIG. **3**, the moving-picture decoding apparatus in this embodiment is equipped a switch **701** and a motion compensator **702**.

The switch **701** switches a picture between a first predictive picture sent to a terminal "b" from the zone-border motion compensator **314** and a second predictive picture sent to a terminal "a" from a motion compensator **702**, in response to an instruction from a decoding controller **313***a*, to supply the selected predictive picture to the terminal "b" of a switch **302**.

The motion compensator **702** receives motion-vector data from an entropy decoder **305***a* and the corresponding reference picture from the frame memory **311** and finds out the corresponding block in the reference picture based on the motion-vector data, thus producing a second predictive picture which is then supplied to the terminal "a" of a switch **701**.

The switch **302** receives a fourth predictive picture, at the terminal "a", produced by the intra predictor **308** and a first or a second predictive picture, at the terminal "b", selected by the switch **701**. The switch **302** performs switching control to the predictive pictures, in response to an instruction from a decoding controller **313***a*, to supply the selected predictive picture to the first combiner **309**.

The entropy decoder **305***a* performs entropy encoding to a received bit string to obtain motion-vector data and residual determination data, in addition to the functions of the entropy decoder **305** in FIG. **3**. The obtained motion-vector data and residual determination data are supplied to the motion compensator **702** and the decoding controller **313***a*, respectively.

The decoding controller **313***a* receives the residual determination data from the entropy decoder **305***a* to examine, from the residual determination data, which of the first or the second predictive picture was used in residual-picture production, thus selected by the switch **701** based on the examination result.

When the decoding controller **313***a* finds out that the predictive picture used in residual-picture production was the first predictive picture, from the residual determination data, it turns the switch **701** to the terminal "b".

In contrast, when the decoding controller **313***a* finds out that the predictive picture used in residual-picture production was the second predictive picture, from the residual determination data, it turns the switch **701** to the terminal "a", to supply the selected predictive picture to the terminal "b" of the switch **302**.

Moreover, the decoding controller **313***a* selects the terminal of the switch **302** according to a decoding mode. If the decoding mode is intra decoding mode, the decoding controller **313***a* turns the switch **302** to the terminal "a", otherwise it turns the switch **302** to the terminal "b".

In FIG. **7**, a zone-border motion compensator **314** supplies a produced first predictive picture to the terminal "b" of the switch **701** whereas, in FIG. **3**, the counterpart supplies it to the terminal "b" of the switch **302**.

Disclosed next with reference to a flowchart in FIG. **8** is an operation of the second embodiment of the moving-picture decoding apparatus in FIG. **7**.

The input receiver **303** receives coded data by sequentially receiving specific packet data as the input signal **301** via a transfer line or a storage medium (step S**401**). Moreover, the input receiver **303** performs a packet combining procedure to the packet data to reconstruct a coded bitstream which is then supplied to the demultiplexer **304**.

The demultiplexer **304** performs demultiplexing of the coded data from the coded bitstream based on a specific syntactic structure (step S**402**), and supplies coded bit strings, post-demultiplexed data, to the entropy decoder **305***a*.

The entropy decoder **305***a* performs entropy decoding to the coded bit strings received from the demultiplexer **304** (step S**403**) to obtain post-quantization data, border motion-vector data, motion-vector data, residual determination data, and other parameter data, for example, required for constructing a specific syntactic structure. Then, the entropy decoder

305*a* supplies at least the post-quantization data, the border motion-vector data, the motion-vector data, and the residual determination data to the inverse-quantizer **306**, the zone-border motion compensator **314**, the motion compensator **702**, and the decoding controller **313***a*, respectively.

The decoding controller **313***a* then determines whether the current decoding mode in the decoding apparatus is intra decoding or not (step S**404**).

If intra decoding (YES in step S**404**), the decoding controller **313***a* supplies the parameter data required for intra decoding to the respective component parts of the decoding apparatus, and turns the switch **302** to the terminal "a" for intra decoding, which is followed by intra prediction at the intra predictor **308** (step S**405**). Then, the procedure moves to step S**409**.

On the contrary, if not intra decoding (NO in step S**404**), the decoding controller **313***a* supplies the parameter data required for inter decoding to the respective component parts of the decoding apparatus, and turns the switch **302** to the terminal "b" for inter decoding.

Moreover, if not intra decoding (NO in step S**404**), the decoding controller **313***a* determines as to whether it is a zone border mode for zone-border motion compensation, based on the residual determination data received from the entropy decoder **305***a* (step S**406**).

If it is the zone border mode (YES in step S**406**), the decoding controller **313***a* turns the switch **701** to the terminal "b" in order to select the first predictive picture to be produced by the zone-border motion compensator **314**. Then, the zone-border motion compensator **314** performs zone-border motion compensation based on the zone-border motion-vector data received from the entropy decoder **305***a* and the corresponding reference picture received from the frame memory **311** (step S**407**). The first predictive picture thus produced is then supplied to the terminal "b" of the switch **701**. Then, the procedure moves to step S**409**.

If it is not the zone border mode (NO in step S**406**), the decoding controller **313***a* turns the switch **701** to the terminal "a" in order to select the second predictive picture to be produced by the motion compensator **702**. Then, the zone-border motion compensator **314** performs zone-border motion compensation based on the motion-vector data received from the entropy decoder **305***a* and the corresponding reference picture received from the frame memory **311** (step S**408**). The second predictive picture thus produced is then supplied to the terminal "a" of the switch **701**. Then, the procedure moves to step S**409**.

When the predictive picture is given, the inverse-quantizer **306** receives the post-quantization data from the entropy decoder **305***a* and performs inverse-quantization to the data based on a specific quantization parameter (step S**409**). Post-inverse-quantization data thus generated are then supplied to the inverse-orthogonal transformer **307**. The inverse-orthogonal transformer **307** performs inverse-orthogonal transform to the post-inverse-quantization data (step S**410**). A decoded residual picture thus produced is supplied to the first combiner **309**.

The first combiner **309** combines the decoded residual picture received from the inverse-orthogonal transformer **307** and the predictive picture received from the switch **302** (step S**411**) to produce a decoded picture which is then supplied to the deblocking filter **310**. The decoded picture is also supplied to the intra predictor **308** when the decoding mode is intra decoding.

The deblocking filter **310** receives the decoded picture from the first combiner **309** and performs a deblocking filtering procedure (step S**412**). A deblocking-filtered decoded picture is then stored in the frame memory **311** as a reference picture for the succeeding coding (step S**413**).

The frame memory **311** receives and stores the deblocking-filtered decoded picture received from the deblocking filter **310**, as a reference picture, and supplies the reference picture to the zone-border motion compensator **314**, the motion compensator **702** and the intra predictor **308**, in need.

It is preferable for the frame memory **311** to store at least one or more of reference pictures and supply a required reference picture to any component parts of the decoding apparatus. Moreover, the frame memory **311** outputs a decoded video frame at display timing for a decoded picture (step S**414**). The decoded video frame is output to an external display apparatus (not shown) as an output signal **312** necessary for displaying.

Thereafter, if there is another coded bitstream to be decoded and decoding is necessary, the procedure returns to step S**401** to continue the decoding procedure whereas if decoding is not necessary, the decoding procedure is finished.

Accordingly, in the moving-picture decoding apparatus and method of the second embodiment, decoding is performed after the zone-border motion compensator **314** or the motion compensator **702** performs zone-border motion compensation or ordinary motion compensation to the input signal that is a coded bitstream subjected to the zone-border motion estimation and zone-border motion compensation or ordinary motion compensation and estimation, discussed above, with coding parameters, border motion-vector data, and residual determination data indicating whether the selected residual signal is based on a predictive signal subjected to zone-border motion compensation or ordinary motion compensation. Therefore, the moving-picture decoding apparatus and method of the second embodiment can correctly decode a bitstream coded through zone-border motion compensation or ordinary motion compensation which are adaptively switched based on the data amount, thus producing high-quality decoded videos with a fewer code amount overall.

Embodiment III

The present invention is not limited to the above embodiment I or II, but also includes programs that achieve the functions of the coding apparatus in FIG. **1** or FIG. **5**, and the functions of the decoding apparatus in FIG. **3** or FIG. **7**, on a central processing apparatus that is a computer shown in FIGS. **9** to **12**, the programs being described as follows.

FIG. **9** is a block diagram of a data processing system operated with a first embodiment of a moving-picture coding program according to the present invention. The data processing system **900** is equipped with: an input unit **901** for entering several kinds of data; an output unit **902** for outputting several kinds of data; a central processing and controlling unit **903** that runs on the first embodiment of the moving-picture coding program according to the present invention; an external memory unit **904**; a temporary memory unit **905** to be used, for example, as a working area in processing at the central processing and controlling unit **903**; and a communications unit **906** for external communications. The units are connected to one another via a bidirectional bus **907**.

Installed in the central processing and controlling unit **903** from a storage medium or via a communications network (not shown) through the communications unit **906** is the first embodiment of the moving-picture coding program that executes the same functions as the coding apparatus shown in FIG. **1**.

The first embodiment of the moving-picture coding program includes, at least, an intra prediction program code **908**, a second subtraction program code **909**, an orthogonal transform program code **910**, a quantization program code **911**, an inverse-quantization program code **912**, an inverse-orthogonal transform program code **913**, a first combination program code **914**, a deblocking filtering program code **915**, an entropy encoding program code **916**, a multiplexing program code **917**, an output transfer program code **918**, a coding control program code **919**, a zone-border motion estimation program code **920**, a zone-border motion compensation program code **921**, and a first subtraction program code **922**. The program codes except the multiplexing program code **917**, the output transfer program code **918**, the coding control program code **919**, the zone-border motion estimation program code **920**, and the zone-border motion compensation program code **921**, are referred to as a predictive coding program code.

The program codes **908**, **909**, **910**, **911**, **912**, **913**, **914**, **915**, **916**, **917**, **918**, **919**, **920**, **921**, and **922** correspond to the intra predictor **105**, the second subtractor **106**, the orthogonal transformer **107**, the quantizer **108**, the inverse-quantizer **109**, the inverse-orthogonal transformer **110**, the first combiner **111**, the deblocking filter **112**, the entropy encoder **113**, the multiplexer **114**, the output transferer **115**, the coding controller **117**, the zone-border motion estimator **118**, the zone-border motion compensator **119**, and the first subtractor **120**, respectively, shown in FIG. **1**.

FIG. **10** is a block diagram of a data processing system operated with a first embodiment of a moving-picture decoding program according to the present invention. In the figure, the basic structure of each unit included in the data processing system **900** is the same as that in FIG. **9**, and hence the explanation thereof is omitted.

Installed in a central processing and controlling unit **903** from a storage medium or via a communications network (not shown) through the communications unit **906** is the first embodiment of the moving-picture decoding program that executes the same functions as the decoding apparatus shown in FIG. **3**.

The first embodiment of the moving-picture decoding program includes, at least, an input receiving program code **1001**, a demultiplexing program code **1002**, an entropy decoding program code **1003**, an inverse-quantization program code **1004**, an inverse-orthogonal transform program code **1005**, an intra prediction program code **1006**, a first combination program code **1007**, a deblocking filtering program code **1008**, a decoding control program code **1009**, and a zone-border motion compensation program code **1010**.

The program codes **1001**, **1002**, **1003**, **1004**, **1005**, **1006**, **1007**, **1008**, **1009**, and **1010** correspond to the input receiver **303**, the demultiplexer **304**, the entropy decoder **305**, the inverse-quantizer **306**, the inverse-orthogonal transformer **307**, the intra predictor **308**, the first combiner **309**, the deblocking filter **310**, the decoding controller **313**, and the zone-border motion compensator **314**, respectively, shown in FIG. **3**.

FIG. **11** is a block diagram of a data processing system operated with a second embodiment of a moving-picture coding program according to the present invention. In the figure, the basic structure of each unit included in the data processing system **900** is the same as that in FIG. **9**, and hence the explanation thereof is omitted.

Installed in a central processing and controlling unit **903** from a storage medium or via a communications network (not shown) through the communications unit **906** is the second embodiment of the moving-picture coding program that executes the same functions as the coding apparatus shown in FIG. **5**.

In addition to the program codes analogous to those of the first embodiment of the moving-picture coding program in FIG. **9**, the second embodiment of the moving-picture coding program includes, at least, a motion estimation program code **1101**, a motion compensation program code **1102**, and a selection program code **1103**. The program codes **1101**, **1102**, and **1103** correspond to the motion estimator **502**, the motion compensator **503**, and the residual determiner **504**, respectively, shown in FIG. **5**.

FIG. **12** is a block diagram of a data processing system operated with a second embodiment of a moving-picture decoding program according to the present invention. In the figure, the basic structure of each unit included in the data processing system **900** is the same as that in FIG. **10**, and hence the explanation thereof is omitted.

Installed in a central processing and controlling unit **903** from a storage medium or via a communications network (not shown) through the communications unit **906** is the second embodiment of the moving-picture decoding program that executes the same functions as the coding apparatus shown in FIG. **7**.

In addition to the program codes analogous to those of the first embodiment of the moving-picture decoding program in FIG. **10**, the second embodiment of the moving-picture decoding program includes, at least, a motion compensation program code **1201** and a selection program code **1202**. The program codes **1201** and **1202** correspond to the motion compensator **702** and the switches **701** and **302**, respectively, shown in FIG. **7**.

The above embodiments are described based on the H. 264/AVC-coding and decoding type or apparatus and the methods and programs thereof, executing intra prediction, deblocking filtering, etc. Not only to that, the present invention is applicable to other coding and decoding types or apparatuses with no intra prediction, deblocking filtering, etc, such as MPEG-1, MPEG-2 or MPEG-4, as long as these are implemented with per-block motion estimation and compensation and equipped with the zone-border motion estimator **118** and the zone-border motion compensator **119**, etc., as implemented in the first and second embodiments.

As disclosed above in detail, according to the present invention, each boundary condition is obtained for each border between a rectangular zone to be subjected to prediction in a picture to be coded and other rectangular zones adjacent to that rectangular zone, by finding a border, in a reference picture, having a boundary condition that matches the boundary condition by motion-vector search, defining a boundary condition of a border in the reference picture that corresponds to the border of the rectangular zone in the picture to be coded based on border motion-vector data that is data on motion vector from the border of the rectangular zone in the picture to be coded to a specific border in the reference picture, and producing the first predictive picture based on an estimated video signal, in each rectangular zone in the picture to be coded, that satisfies Poisson's Equation, in zone-border motion compensation. Therefore, according to the present invention, a predictive picture can be produced that maintains continuity of a video signal included in the predictive picture even on a block border, with no discontinuous state between blocks which appears in typical motion estimation and compensation.

Moreover, according to the present invention, production of a predictive picture including a video signal that maintains continuity with no discontinuous state between rectangular

zones prevents the quality of a residual picture produced by a difference between the predictive picture and a picture to be coded from being affected by motion estimation and compensation, thus enhancing efficiency of orthogonal transform and quantization of the residual picture.

Moreover, according to the present invention, switching is conducted appropriately between the first and second residual pictures according to the generated data amount so that a residual picture of a smaller data amount is subjected to later-stage orthogonal transform, the first residual picture being a residual signal between the first predictive picture produced by zone-border motion compensation and a picture to be coded and the second residual picture being a residual signal between the second predictive picture produced by typical motion compensation and the picture to be coded. Therefore, the present invention achieves enhancement of coding efficiency for overall coded bitstream.

Moreover, according to the present invention, a coded bitstream thus obtained by coding as described above is received via a transfer line or storage medium for entropy decoding to generate, at least, post-quantization data, zone-border motion-vector data and parameter data required for constructing a specific syntactic structure, defining a boundary condition of a border, in a reference picture, corresponding to and based on the decoded zone-border motion-vector data, an estimated video signal is generated in each rectangular zone in a picture to be coded, that satisfies Poisson's Equation, based on the defined boundary condition, thus producing a predictive picture, and the predictive picture is combined with a decoded residual picture. Therefore, the present invention achieves efficient transfer, reception and reproduction of a coded bitstream with a smaller code amount than known art.

What is claimed is:

1. A moving-picture coding apparatus comprising:

a predictive encoder to produce and encode a residual picture that is a residual signal between a picture to be coded that is an input moving-picture video signal to be subjected to coding and a predictive picture produced from a reference picture that is a local decoded video signal for each of a plurality of rectangular zones, each composed of a specific number of pixels, into which a video area of the moving-picture video signal is divided;

a zone-border motion estimator to obtain a boundary condition of each of a plurality of borders between the rectangular zones and another plurality of rectangular zones adjacent to the rectangular zones, find a border, of the reference picture, having a boundary condition that matches the boundary condition, by motion-vector search in the reference picture, and generate border motion-vector data that is data on a motion vector from a border of the rectangular zone in the picture to be coded to the border of the reference picture thus found; and

a zone-border motion compensator to define a boundary condition of a border that corresponds to the border motion vector data, from the reference picture based on the border motion-vector data, and generate an estimated video signal in each rectangular zone in the picture to be coded, that satisfies Poisson's Equation, thus producing a first predictive picture,

wherein the predictive encoder produces the residual picture with the first predictive picture as the predictive picture and encodes the residual picture;

said predictive encoder including a first subtractor to produce a first residual picture from a difference between the picture to be coded and the first predictive picture;

an orthogonal transformer to perform orthogonal transform to the first residual picture, thus generating orthogonal-transform coefficients data;

a quantizer to perform quantization to the orthogonal-transform coefficients data based on a specific quantization parameter, thus generating post-quantization data;

an inverse-quantizer to perform inverse-quantization to the post-quantization data based on a specific quantization parameter, thus generating post-inverse-quantization data; and

an inverse-orthogonal transformer to perform inverse-orthogonal transform to the post-inverse-quantization data, thus producing a decoded residual picture.

2. The moving-picture coding apparatus according to claim **1** wherein the predictive encoder further includes:

a motion estimator to perform motion-vector search in the reference picture by block matching for each rectangular zone in the picture to be coded, thus generating motion-vector data that indicates a matched rectangular zone in the reference picture;

a motion compensator to find a corresponding rectangular zone in the reference picture based on the motion-vector data, thus producing a second predictive picture;

a second subtractor to produce a second residual picture that is a difference between the second predictive picture and the picture to be coded; and

a residual determiner to compare the first predictive picture and the second predictive picture based on specific criteria, thus selecting the predictive picture having a smaller data amount.

3. The moving-picture coding apparatus according to claim **1** wherein the predictive encoder includes an entropy encoder to perform entropy encoding, at least, to the post-quantization data and the border motion-vector data, thus generating coded bitstreames, wherein the moving-picture coding apparatus comprises a multiplexer to multiplex the coded bitstreames based on a specific syntax structure.

4. A non-transitory computer readable device having stored thereon a computer program comprising a set of instructions when executed by a computer to implement a method for moving-picture coding, the program comprising:

a predictive encoding program code to produce and encode a residual picture that is a residual signal between a picture to be coded that is an input moving-picture video signal to be subjected to coding and a predictive picture produced from a reference picture that is a local decoded video signal for each of a plurality of rectangular zones, each composed of a specific number of pixels, into which a video area of the moving-picture video signal is divided;

a zone-border motion estimation program code to obtain a boundary condition of each of a plurality of borders between the rectangular zones and another plurality of rectangular zones adjacent to the rectangular zones, find a border, of the reference picture, having a boundary condition that matches the boundary condition, by motion-vector search in the reference picture, and generate border motion-vector data that is data on a motion vector from a border of the rectangular zone in the picture to be coded to the border of the reference picture thus found; and

a zone-border motion compensation program code to define a boundary condition of a border that corresponds to the border motion vector data, from the reference picture based on the border motion-vector data, and generate an estimated video signal in each rectangular

zone in the picture to be coded, that satisfies Poisson's Equation, thus producing a first predictive picture,

wherein the predictive encoding program code produces the residual picture with the first predictive picture as the predictive picture and encodes the residual picture;

said predictive encoding program code including a first subtraction program code to produce a first residual picture from a difference between the picture to be coded and the first predictive picture;

an orthogonal transform program code to perform orthogonal transform to the first residual picture, thus generating orthogonal-transform coefficients data;

a quantization program code to perform quantization to the orthogonal-transform coefficients data based on a specific quantization parameter, thus generating post-quantization data;

an inverse-quantization program code to perform inverse-quantization to the post-quantization data based on a specific quantization parameter, thus generating post-inverse-quantization data;

an inverse-orthogonal transform program code to perform inverse-orthogonal transform to the post-inverse-quantization data, thus producing a decoded residual picture; and

an entropy coding program code to perform entropy coding, at least, to the post-quantization data and the border motion-vector data, thus generating coded bit strings,

wherein the moving-picture coding program further comprises multiplex program code to multiplex the coded bit strings based on a specific syntax structure, thus generating a coded bitstream.

5. The moving-picture coding program code according to claim **4** wherein the predictive encoding program code further includes:

a motion estimation program code to perform motion-vector search in the reference picture by block matching for each rectangular zone in the picture to be coded, thus generating motion-vector data that indicates a matched rectangular zone in the reference picture;

a motion compensation program code to find a corresponding rectangular zone in the reference picture based on the motion-vector data, thus producing a second predictive picture;

a second subtraction program code to produce a second residual picture that is a difference between the second predictive picture and the picture to be coded; and

a selection program code to compare the first predictive picture and the second predictive picture based on specific criteria, thus selecting the predictive picture having a smaller data amount,

wherein the moving-picture coding program code further comprises a coding control program code to perform control to supply the selected residual picture and a predictive picture corresponding to the residual picture to the predictive encoding program code.

6. A moving-picture decoding apparatus comprising:

a demultiplexer to demultiplex coded data from an input signal based on a specific syntax structure, the input signal being obtained by multiplexing a coded bitstream obtained by predictive coding, border motion-vector data and post-quantization data obtained by quantization in the predictive coding, the coded bitstream obtained by producing and encoding a residual picture that is a residual signal between a picture to be coded that is an input moving-picture video signal to be subjected to coding and a predictive picture produced from a reference picture that is a local decoded video signal for each of a plurality of rectangular zones, each composed of a specific number of pixels, into which a video area of the moving-picture video signal is divided, obtaining a boundary condition of each of a plurality of borders between the rectangular zones and another plurality of rectangular zones adjacent to the rectangular zones, finding a border, of the reference picture, having a boundary condition that matches the boundary condition, by motion-vector search in the reference picture, and generating the border motion-vector data that is data on a motion vector from a border of the rectangular zone in the picture to be coded to the border of the reference picture thus found, defining a boundary condition of a border that corresponds to the border motion vector data, from the reference picture based on the border motion-vector data, and generating an estimated video signal in each rectangular zone in the picture to be coded, that satisfies Poisson's Equation, thus producing the predictive picture;

an entropy decoder to perform entropy decoding to the data thus demultiplexed to generate, at least, motion-vector data, the post-quantization data, the border motion-vector data and parameter data required for constructing a specific syntax structure;

an inverse-quantizer to perform inverse-quantization to the post-quantization data to generate post-quantization orthogonal transform coefficients data;

an inverse-orthogonal transformer to perform inverse-orthogonal transform to the post-quantization orthogonal transform coefficients data to produce a decoded residual picture of one video area;

a zone-border motion compensator to define a boundary condition of a border that corresponds to the border motion vector data, from the reference picture based on the border motion-vector data, and generate an estimated video signal in each rectangular zone in the picture to be coded, that satisfies Poisson's Equation, thus producing a first predictive picture;

a combiner to combine the first predictive picture and the decoded residual picture to generate a decoded moving-picture signal;

a memory to store the decoded moving-picture signal for at least one picture as a reference picture;

a motion compensator to specify a corresponding rectangular zone in the reference picture based on the motion-vector data, thus generating a second predictive picture;

a selector to select either the first predictive picture or the second predictive picture and supply the predictive picture thus selected to the combiner; and

a decoding controller to receive decoding control data for decoding control from the parameter data and control the selector to switch the predictive picture to be supplied to the combiner between the first and second predictive pictures according to the decoding control data.

7. A non-transitory computer readable device having stored thereon a computer program comprising a set of instructions when executed by a computer to implement a method for moving-picture decoding, the program comprising:

a demultiplex program code to demultiplex coded data from an input signal based on a specific syntax structure, the input signal being obtained by multiplexing a coded bitstream obtained by predictive coding, border motion-vector data and post-quantization data obtained by quantization in the predictive coding, the coded bitstream obtained by producing and encoding a residual picture that is a residual signal between a picture to be coded that

is an input moving-picture video signal to be subjected to coding and a predictive picture produced from a reference picture that is a local decoded video signal for each of a plurality of rectangular zones, each composed of a specific number of pixels, into which a video area of the moving-picture video signal is divided, obtaining a boundary condition of each of a plurality of borders between the rectangular zones and another plurality of rectangular zones adjacent to the rectangular zones, finding a border, of the reference picture, having a boundary condition that matches the boundary condition, by motion-vector search in the reference picture, and generating the border motion-vector data that is data on a motion vector from a border of the rectangular zone in the picture to be coded to the border of the reference picture thus found, defining a boundary condition of a border that corresponds to the border motion vector data, from the reference picture based on the border motion-vector data, and generating an estimated video signal in each rectangular zone in the picture to be coded, that satisfies Poisson's Equation, thus producing the predictive picture;

an entropy decoding program code to perform entropy decoding to the data thus demultiplexed to generate, at least, the post-quantization data, the border motion-vector data and parameter data required for constructing a specific syntax structure;

an inverse-quantization program code to perform inverse-quantization to the post-quantization data to generate post-quantization orthogonal transform coefficients data;

an inverse-orthogonal transform program code to perform inverse-orthogonal transform to the post-quantization orthogonal transform coefficients data to produce a decoded residual picture of one video area;

a zone-border motion compensation program code to define a boundary condition of a border that corresponds to the border motion vector data, from the reference picture based on the border motion-vector data, and generate an estimated video signal in each rectangular zone in the picture to be coded, that satisfies Poisson's Equation, thus producing a first predictive picture; and

a combine program code to combine the first predictive picture and the decoded residual picture to generate a decoded moving-picture signal, the decoded moving-picture signal for at least one picture being stored as a reference picture.

8. The moving-picture decoding program according to claim **7** wherein the entropy decoding program code further generates motion-vector data, the program further comprises:

a motion compensation program code to specify a corresponding rectangular zone in the reference picture based on the motion-vector data, thus generating a second predictive picture;

a selection program code to select either the first predictive picture or the second predictive picture and supply the predictive picture thus selected to the combiner; and

a decoding controlling program code to receive decoding control data for decoding control from the parameter data and control the selector to switch the predictive picture to be supplied to the combiner between the first and second predictive pictures according to the decoding control data.

9. A moving-picture coding method to be implemented in a moving-picture coding apparatus comprising the steps of:

producing and encoding a residual picture that is a residual signal between a picture to be coded that is an input moving-picture video signal to be subjected to coding and a predictive picture produced from a reference picture that is a local decoded video signal for each of a plurality of rectangular zones, each composed of a specific number of pixels, into which a video area of the moving-picture video signal is divided;

obtaining a boundary condition of each of a plurality of borders between the rectangular zones and another plurality of rectangular zones adjacent to the rectangular zones, finding a border, of the reference picture, having a boundary condition that matches the boundary condition, by motion-vector search in the reference picture, and generating border motion-vector data that is data on a motion vector from a border of the rectangular zone in the picture to be coded to the border of the reference picture thus found;

defining a boundary condition of a border that corresponds to the border motion vector data, from the reference picture based on the border motion-vector data, and generating an estimated video signal in each rectangular zone in the picture to be coded, that satisfies Poisson's Equation, thus producing a predictive picture;

producing a first residual picture from a difference between the picture to be coded and the predictive picture;

performing orthogonal transform to the first residual picture, thus generating orthogonal-transform coefficients data;

performing quantization to the orthogonal-transform coefficients data based on a specific quantization parameter, thus generating post-quantization data;

performing inverse-quantization to the post-quantization data based on a specific quantization parameter, thus generating post-inverse-quantization data; and

performing inverse-orthogonal transform to the post-inverse-quantization data, thus producing a decoded residual picture.

10. A moving-picture decoding method to be implemented in a moving-picture coding apparatus comprising the steps of:

demultipling coded data from an input signal based on a specific syntax structure, the input signal being obtained by multiplexing a coded bitstream obtained by predictive coding, border motion-vector data and post-quantization data obtained by quantization in the predictive coding, the coded bitstream obtained by producing and encoding a residual picture that is a residual signal between a picture to be coded that is an input moving-picture video signal to be subjected to coding and a predictive picture produced from a reference picture that is a local decoded video signal for each of a plurality of rectangular zones, each composed of a specific number of pixels, into which a video area of the moving-picture video signal is divided, obtaining a boundary condition of each of a plurality of borders between the rectangular zones and another plurality of rectangular zones adjacent to the rectangular zones, finding a border, of the reference picture, having a boundary condition that matches the boundary condition, by motion-vector search in the reference picture, and generating the border motion-vector data that is data on a motion vector from a border of the rectangular zone in the picture to be coded to the border of the reference picture thus found, defining a boundary condition of a border that corresponds to the border motion vector data, from the reference picture based on the border motion-vector data, and generating an estimated video signal in each rectangular zone in the picture to be coded, that satisfies Poisson's Equation, thus producing the predictive picture;

performing entropy decoding to the data thus demultiplexed to generate, at least, the post-quantization data, the border motion-vector data and parameter data required for constructing a specific syntax structure;

performing inverse-quantization to the post-quantization data to generate post-quantization orthogonal transform coefficients data;

performing inverse-orthogonal transform to the post-quantization orthogonal transform coefficients data to produce a decoded residual picture of one video area;

defining a boundary condition of a border that corresponds to the border motion vector data, from the reference picture based on the border motion-vector data, and generate an estimated video signal in each rectangular zone in the picture to be coded, that satisfies Poisson's Equation, thus producing a predictive picture;

combining the first predictive picture and the decoded residual picture to generate a decoded moving-picture signal; and

storing the decoded moving-picture signal for at least one picture as a reference picture.

* * * * *