IN THE UNITED STATES PATENT AND TRADEMARK OFFICE

In re Patent of:	Satoru Sakazume	
U.S. Patent No.:	8,090,025	Attorney Docket No.: 39843-0168IP1
Issue Date:	January 3, 2012	
Appl. Serial No.:	11/787,623	
Filing Date:	April 17, 2007	
Title:	MOVING-PICTURE CODING APPARATUS, METHOD AND PROGRAM, AND MOVING-PICTURE DECODING APPARATUS, METHOD AND PROGRAM	

Mail Stop Patent Board
Patent Trial and Appeal Board
U.S. Patent and Trademark Office
P.O. Box 1450
Alexandria, VA 22313-1450

PETITION FOR *INTER PARTES* REVIEW OF UNITED STATES PATENT NO. 8,090,025 PURSUANT TO 35 U.S.C. §§ 311–319, 37 C.F.R. § 42

APPLE-1027

TABLE OF CONTENTS

I. REQUIREMENTS FOR IPR 1
- **A.** Grounds for Standing 1
- **B.** Challenge and Relief Requested 1
- **C.** Claim Construction 2
- **D.** Level of Ordinary Skill in the Art 3

II. THE '025 PATENT 3
- **A.** Brief Description 3
- **B.** Prosecution History 7

III. THE CHALLENGED CLAIMS ARE UNPATENTABLE 8
- **A.** [GROUND 1A/1B] – Claims 1-10 are rendered obvious by Mualla, Shirani, and Saito and claims 1-10 are rendered obvious by Mualla, Shirani, Saito, and Stockhammer 8
  - 1. Overview of Mualla (and Mualla and Stockhammer in Ground 1B) 8
  - 2. Overview of Shirani 33
  - 3. Combination of Mualla and Shirani (and the Combination of Mualla-Stockhammer and Shirani in Ground 1B) 37
  - 4. Overview of Saito 40
  - 5. Combination of Mualla-Shirani and Saito (and the Combination of Mualla-Stockhammer-Shirani and Saito in Ground 1B) 42
  - 6. Analysis 50

IV. PTAB DISCRETION SHOULD NOT PRECLUDE INSTITUTION 106
- **A.** Discretionary Denial under 325(d) is not warranted 106
- **B.** 35 U.S.C. §314(a) - – Discretionary Denial is not Merited in view of Petitioner's *Sotera* Stipulation 108

V. CONCLUSION AND FEES 108

VI. MANDATORY NOTICES UNDER 37 C.F.R § 42.8(a)(1) 108
- **A.** Real Party-In-Interest Under 37 C.F.R. § 42.8(b)(1) 108
- **B.** Related Matters Under 37 C.F.R. § 42.8(b)(2) 109
- **C.** Lead And Back-Up Counsel Under 37 C.F.R. § 42.8(b)(3) 109
- **D.** Service Information 109

EXHIBITS

SAMSUNG-1001	U.S. Patent No. 8,090,025 to Sakazume ("the '025 Patent")
SAMSUNG-1002	Excerpts from the Prosecution History of the '025 Patent ("the Prosecution History")
SAMSUNG-1003	Declaration and Curriculum Vitae of Dr. Reader
SAMSUNG-1004	Complaint, *Advanced Coding Technologies LLC v. Samsung Electronics Co., Ltd. et al.*, 2:22-cv-00499-JRG, E.D. Tex., filed December 30, 2022
SAMSUNG-1005	Al-Mualla, et al., "Video Coding for Mobile Communications: Efficiency, Complexity and Resilience," Elsevier, 2002 (Mualla)
SAMSUNG-1006	S. Shirani, et al., "A Concealment Method for Video Communications in an Error-Prone Environment," in IEEE Journal on Selected Areas in Communications, vol. 18, no. 6, pp. 1122-1128, June 2000 (Shirani)
SAMSUNG-1007	N. Saito, et al., "The Polyharmonic Local Sine Transform: A New Tool for Local Image Analysis and Synthesis without Edge Effect," Applied and Computational Harmonic Analysis, vol. 20, pp. 41-73, January 2006 (Saito)
SAMSUNG-1008	B. Girod, et al., "Feedback-Based Error Control for Mobile Video Transmission," in Proceedings of the IEEE, vol. 87, no. 10, pp. 1707-1723, Oct. 1999 (Girod)
SAMSUNG-1009	T. Stockhammer, et al., "H.264/AVC in Wireless Environments," in IEEE Trans. on Circuits and Systems for Video Tech., vol. 13, no. 7, July 2003 (Stockhammer)
SAMSUNG-1010	Perez, et al., "Poisson Image Editing," ACM, ACM Transactions on Graphics (TOG), vol. 22, Issue 3, Jul. 2003, pp. 313-318 (Perez)

SAMSUNG-1011	Wexler, et al., "Space-Time Video Completion," In Proc. IEEE Comput. Soc. Conf. Computer Vision and Pattern Recognition, 2004, pp. 120 –127 (Wexler)
SAMSUNG-1012	Raskar, et al., "Image Fusion for Context Enhancement and Video Surrealism," Proceedings of the 3rd Symposium on Non-Photorealistic Animation and Rendering, 2004, pp. 85-152 (Raskar)
SAMSUNG-1013	Sun, et al., "Poisson Matting," ACM Transactions on Graphics (Tog), Special Issue: Proceedings of the 2004 Siggraph Conference Session: Interacting With Images, vol. 23, Issue 3, 2004, pp. 315-321 (Sun)
SAMSUNG-1014	U.S. Patent No. 7,636,128 B2 to Sun, et al. (Sun-128)
SAMSUNG-1015	Fattal, et al., "Gradient Domain High Dynamic Range Compression," In Proceedings of ACM SIGGRAPH, 2002, 249–256 (Fattal)
SAMSUNG-1016	ITU-T Rec. H.263 (01/2005) ("the H.263 standard")
SAMSUNG-1017	M. Wada, "Selective Recovery of Video Packet Loss Using Error Concealment," IEEE Journal on Selected Areas of Communication, vol. 7, pp. 807–814, June 1989 (Wada)
SAMSUNG-1018	Declaration of June Munford
SAMSUNG-1019	Memorandum, Interim Procedure for Discretionary Denials in AIA Post-Grant Proceedings with Parallel District Court Litigation (USPTO June 21, 2022) ("Director's Guidance")
SAMSUNG-1020	Samsung Stipulation letter regarding IPR grounds in District court litigation.
SAMSUNG-1021	ITU-T Rec. H.263 (02/1998)
SAMSUNG-1022	List, et al., "Adaptive Deblocking Filter," IEEE Journal on Circuits and Systems for Video Technology, vol. 13, pp. 614-619, July 200 (List)

LISTING OF CHALLENGED CLAIM ELEMENTS

Claim 1	
[1.pre]	A moving-picture coding apparatus comprising:
[1.1.COD]	a predictive encoder to produce and encode a residual picture that is a residual signal between a picture to be coded that is an input moving-picture video signal to be subjected to coding and a predictive picture produced from a reference picture that is a local decoded video signal for each of a plurality of rectangular zones, each composed of a specific number of pixels, into which a video area of the moving-picture video signal is divided;
[1.2.COD]	a zone-border motion estimator to obtain a boundary condition of each of a plurality of borders between the rectangular zones and another plurality of rectangular zones adjacent to the rectangular zones,
[1.3.COD]	find a border, of the reference picture, having a boundary condition that matches the boundary condition, by motion-vector search in the reference picture,
[1.4.COD]	and generate border motion-vector data that is data on a motion vector from a border of the rectangular zone in the picture to be coded to the border of the reference picture thus found; and
[1.5.COD]	a zone-border motion compensator to define a boundary condition of a border that corresponds to the border motion vector data, from the reference picture based on the border motion-vector data,
[1.6.COD]	and generate an estimated video signal in each rectangular zone in the picture to be coded, that satisfies Poisson's Equation, thus producing a first predictive picture,
[1.7.COD]	wherein the predictive encoder produces the residual picture with the first predictive picture as the predictive picture and encodes the residual picture;
[1.8.COD]	said predictive encoder including a first subtractor to produce a first residual picture from a difference between the picture to be coded and the first predictive picture;
[1.9.COD]	an orthogonal transformer to perform orthogonal transform to the first residual picture, thus generating orthogonal-transform coefficients data;

[1.10.COD]	a quantizer to perform quantization to the orthogonal transform coefficients data based on a specific quantization parameter, thus generating post-quantization data;
[1.11.DEC]	an inverse-quantizer to perform inverse-quantization to the post-quantization data based on a specific quantization parameter, thus generating post-inverse-quantization data; and
[1.12.DEC]	an inverse-orthogonal transformer to perform inverse-orthogonal transform to the post-inverse-quantization data, thus producing a decoded residual picture.
Claim 2	
[2.1]	The moving-picture coding apparatus according to claim 1 wherein the predictive encoder further includes: a motion estimator to perform motion-vector search in the reference picture by block matching for each rectangular zone in the picture to be coded, thus generating motion vector data that indicates a matched rectangular zone in the reference picture;
[2.2]	a motion compensator to find a corresponding rectangular zone in the reference picture based on the motion-vector data, thus producing a second predictive picture;
[2.3]	a second subtractor to produce a second residual picture that is a difference between the second predictive picture and the picture to be coded; and
[2.4]	a residual determiner to compare the first predictive picture and the second predictive picture based on specific criteria, thus selecting the predictive picture having a smaller data amount.
Claim 3	
[3]	The moving-picture coding apparatus according to claim 1 wherein the predictive encoder includes an entropy encoder to perform entropy encoding, at least, to the post-quantization data and the border motion-vector data, thus generating coded bitstreams, wherein the moving-picture coding apparatus comprises a multiplexer to multiplex the coded bitstreams based on a specific syntax structure.
Claim 4	

[4.pre]	A non-transitory computer readable device having stored thereon a computer program comprising a set of instructions when executed by a computer to implement a method for moving-picture coding, the program comprising:
[4.1.COD]	a predictive encoding program code to produce and encode a residual picture that is a residual signal between a picture to be coded that is an input moving-picture video signal to be subjected to coding and a predictive picture produced from a reference picture that is a local decoded video signal for each of a plurality of rectangular zones, each composed of a specific number of pixels, into which a video area of the moving-picture video signal is divided;
[4.2.COD]	a zone-border motion estimation program code to obtain a boundary condition of each of a plurality of borders between the rectangular zones and another plurality of rectangular zones adjacent to the rectangular zones,
[4.3.COD]	find a border, of the reference picture, having a boundary condition that matches the boundary condition, by motion-vector search in the reference picture,
[4.4.COD]	and generate border motion-vector data that is data on a motion vector from a border of the rectangular zone in the picture to be coded to the border of the reference picture thus found; and
[4.5.COD]	a zone-border motion compensation program code to define a boundary condition of a border that corresponds to the border motion vector data, from the reference picture based on the border motion-vector data,
[4.6.COD]	and generate an estimated video signal in each rectangular zone in the picture to be coded, that satisfies Poisson's Equation, thus producing a first predictive picture,
[4.7.COD]	wherein the predictive encoding program code produces the residual picture with the first predictive picture as the predictive picture and encodes the residual picture;
[4.8.COD]	said predictive encoding program code including a first subtraction program code to produce a first residual picture from a difference between the picture to be coded and the first predictive picture;
[4.9.COD]	an orthogonal transform program code to perform orthogonal transform to the first residual picture, thus generating orthogonal-transform coefficients data;

[4.10.COD]	a quantization program code to perform quantization to the orthogonal-transform coefficients data based on a specific quantization parameter, thus generating post-quantization data;
[4.11.DEC]	an inverse-quantization program code to perform inverse-quantization to the post-quantization data based on a specific quantization parameter, thus generating post-inverse-quantization data;
[4.12.DEC]	an inverse-orthogonal transform program code to perform inverse-orthogonal transform to the post-inverse-quantization data, thus producing a decoded residual picture; and
[4.13.COD]	an entropy coding program code to perform entropy coding, at least, to the post-quantization data and the border motion-vector data, thus generating coded bit strings,
[4.14.COD]	wherein the moving-picture coding program further comprises multiplex program code to multiplex the coded bit strings based on a specific syntax structure, thus generating a coded bitstream.
Claim 5	
[5.1]	The moving-picture coding program code according to claim 4 wherein the predictive encoding program code further includes: a motion estimation program code to perform motion-vector search in the reference picture by block matching for each rectangular zone in the picture to be coded, thus generating motion-vector data that indicates a matched rectangular zone in the reference picture;
[5.2]	a motion compensation program code to find a corresponding rectangular zone in the reference picture based on the motion-vector data, thus producing a second predictive picture;
[5.3]	a second subtraction program code to produce a second residual picture that is a difference between the second predictive picture and the picture to be coded; and
[5.4]	a selection program code to compare the first predictive picture and the second predictive picture based on specific criteria, thus selecting the predictive picture having a smaller data amount,
[5.5]	wherein the moving-picture coding program code further comprises a coding control program code to perform control to supply the selected residual picture and a predictive picture corresponding to the residual picture to the predictive encoding program code.

Claim 6	
[6.pre]	A moving-picture decoding apparatus comprising:
[6.1.DEC]	a demultiplexer to demultiplex coded data from an input signal based on a specific syntax structure,
[6.2.COD]	the input signal being obtained by multiplexing a coded bitstream obtained by predictive coding, border motion-vector data and post-quantization data obtained by quantization in the predictive coding,
[6.3.COD]	the coded bitstream obtained by producing and encoding a residual picture that is a residual signal between a picture to be coded that is an input moving-picture video signal to be subjected to coding and a predictive picture produced from a reference picture that is a local decoded video signal for each of a plurality of rectangular zones, each composed of a specific number of pixels, into which a video area of the moving-picture video signal is divided,
[6.4.COD]	obtaining a boundary condition of each of a plurality of borders between the rectangular zones and another plurality of rectangular zones adjacent to the rectangular zones,
[6.5.COD]	finding a border, of the reference picture, having a boundary condition that matches the boundary condition, by motion-vector search in the reference picture,
[6.6.COD]	and generating the border motion-vector data that is data on a motion vector from a border of the rectangular zone in the picture to be coded to the border of the reference picture thus found, defining a boundary condition of a border that corresponds to the border motion vector data, from the reference picture based on the border motion vector data,
[6.7.COD]	and generating an estimated video signal in each rectangular zone in the picture to be coded, that satisfies Poisson's Equation, thus producing the predictive picture;
[6.8.DEC]	an entropy decoder to perform entropy decoding to the data thus demultiplexed to generate, at least, motion-vector data, the post-quantization data, the border motion-vector data and parameter data required for constructing a specific syntax structure;

[6.9.DEC]	an inverse-quantizer to perform inverse-quantization to the post-quantization data to generate post-quantization orthogonal transform coefficients data;
[6.10.DEC]	an inverse-orthogonal transformer to perform inverse-orthogonal transform to the post-quantization orthogonal transform coefficients data to produce a decoded residual picture of one video area;
[6.11.DEC]	a zone-border motion compensator to define a boundary condition of a border that corresponds to the border motion vector data, from the reference picture based on the border motion-vector data, and generate an estimated video signal in each rectangular zone in the picture to be coded, that satisfies Poisson's Equation, thus producing a first predictive picture;
[6.12.DEC]	a combiner to combine the first predictive picture and the decoded residual picture to generate a decoded moving picture signal;
[6.13.DEC]	a memory to store the decoded moving-picture signal for at least one picture as a reference picture;
[6.14.DEC]	a motion compensator to specify a corresponding rectangular zone in the reference picture based on the motion vector data, thus generating a second predictive picture;
[6.15.DEC]	a selector to select either the first predictive picture or the second predictive picture and supply the predictive picture thus selected to the combiner; and
[6.16.DEC]	a decoding controller to receive decoding control data for decoding control from the parameter data and control the selector to switch the predictive picture to be supplied to the combiner between the first and second predictive pictures according to the decoding control data.
Claim 7	
[7.pre]	A non-transitory computer readable device having stored thereon a computer program comprising a set of instructions when executed by a computer to implement a method for moving-picture decoding, the program comprising:
[7.1.DEC]	a demultiplex program code to demultiplex coded data from an input signal based on a specific syntax structure,
[7.2.COD]	the input signal being obtained by multiplexing a coded bitstream obtained by predictive coding, border motion vector data and

	post-quantization data obtained by quantization in the predictive coding,
[7.3.COD]	the coded bitstream obtained by producing and encoding a residual picture that is a residual signal between a picture to be coded that is an input moving-picture video signal to be subjected to coding, and a predictive picture produced from a reference picture that is a local decoded video signal for each of a plurality of rectangular zones, each composed of a specific number of pixels, into which a video area of the moving-picture video signal is divided,
[7.4.COD]	obtaining a boundary condition of each of a plurality of borders between the rectangular zones and another plurality of rectangular zones adjacent to the rectangular zones,
[7.5.COD]	finding a border, of the reference picture, having a boundary condition that matches the boundary condition, by motion-vector search in the reference picture,
[7.6.COD]	and generating the border motion-vector data that is data on a motion vector from a border of the rectangular zone in the picture to be coded to the border of the reference picture thus found, defining a boundary condition of a border that corresponds to the border motion vector data, from the reference picture based on the border motion vector data,
[7.7.COD]	and generating an estimated video signal in each rectangular zone in the picture to be coded, that satisfies Poisson's Equation, thus producing the predictive picture;
[7.8.DEC]	an entropy decoding program code to perform entropy decoding to the data thus demultiplexed to generate, at least, the post-quantization data, the border motion-vector data and parameter data required for constructing a specific syntax structure;
[7.9.DEC]	an inverse-quantization program code to perform inverse-quantization to the post-quantization data to generate post-quantization orthogonal transform coefficients data;
[7.10.DEC]	an inverse-orthogonal transform program code to perform inverse-orthogonal transform to the post-quantization orthogonal transform coefficients data to produce a decoded residual picture of one video area;
[7.11.DEC]	a zone-border motion compensation program code to define a boundary condition of a border that corresponds to the border

	motion vector data, from the reference picture based on the border motion-vector data, and generate an estimated video signal in each rectangular zone in the picture to be coded, that satisfies Poisson's Equation, thus producing a first predictive picture; and
[7.12.DEC]	a combine program code to combine the first predictive picture and the decoded residual picture to generate a decoded moving-picture signal, the decoded moving-picture signal for at least one picture being stored as a reference picture.
Claim 8	
[8.pre]	The moving-picture decoding program according to claim 7 wherein the entropy decoding program code further generates motion-vector data, the program further comprises:
[8.1]	a motion compensation program code to specify a corresponding rectangular zone in the reference picture based on the motion-vector data, thus generating a second predictive picture;
[8.2]	a selection program code to select either the first predictive picture or the second predictive picture and supply the predictive picture thus selected to the combiner; and
[8.3]	a decoding controlling program code to receive decoding control data for decoding control from the parameter data and control the selector to switch the predictive picture to be supplied to the combiner between the first and second predictive pictures according to the decoding control data.
Claim 9	
[9.pre]	A moving-picture coding method to be implemented in a moving-picture coding apparatus comprising the steps of:
[9.1.COD]	producing and encoding a residual picture that is a residual signal between a picture to be coded that is an input moving-picture video signal to be subjected to coding and a predictive picture produced from a reference picture that is a local decoded video signal for each of a plurality of rectangular zones, each composed of a specific number of pixels, into which a video area of the moving-picture video signal is divided;
[9.2.COD]	obtaining a boundary condition of each of a plurality of borders between the rectangular zones and another plurality of rectangular zones adjacent to the rectangular zones

[9.3.COD]	finding a border, of the reference picture, having a boundary condition that matches the boundary condition, by motion-vector search in the reference picture,
[9.4.COD]	and generating border motion-vector data that is data on a motion vector from a border of the rectangular zone in the picture to be coded to the border of the reference picture thus found; defining a boundary condition of a border that corresponds to the border motion vector data, from the reference picture based on the border motion-vector data,
[9.5.COD]	and generating an estimated video signal in each rectangular zone in the picture to be coded, that satisfies Poisson's Equation, thus producing a first predictive picture;
[9.6.COD]	producing a first residual picture from a difference between the picture to be coded and the first predictive picture;
[9.7.COD]	performing orthogonal transform to the first residual picture, thus generating orthogonal-transform coefficients data;
[9.8.COD]	performing quantization to the orthogonal-transform coefficients data based on a specific quantization parameter, thus generating post-quantization data;
[9.9.DEC]	performing inverse-quantization to the post-quantization data based on a specific quantization parameter, thus generating post-inverse-quantization data; and
[9.10.DEC]	performing inverse-orthogonal transform to the post-inverse quantization data, thus producing a decoded residual picture.
Claim 10	
[10.pre]	A moving-picture decoding method to be implemented in a moving-picture coding apparatus comprising the steps of:
[10.1.DEC]	demultiplexing coded data from an input signal based on a specific syntax structure,
[10.2.COD]	the input signal being obtained by multiplexing a coded bitstream obtained by predictive coding, border motion-vector data and post-quantization data obtained by quantization in the predictive coding,
[10.3.COD]	the coded bitstream obtained by producing and encoding a residual picture that is a residual signal between a picture to be coded that is an input moving-picture video signal to be subjected to coding, and a predictive picture produced from a reference picture that is a local decoded video signal for each of a plurality of

	rectangular zones, each composed of a specific number of pixels, into which a video area of the moving-picture video signal is divided,
[10.4.COD]	obtaining a boundary condition of each of a plurality of borders between the rectangular zones and another plurality of rectangular zones adjacent to the rectangular zones,
[10.5.COD]	finding a border, of the reference picture, having a boundary condition that matches the boundary condition, by motion-vector search in the reference picture,
[10.6.COD]	and generating the border motion-vector data that is data on a motion vector from a border of the rectangular zone in the picture to be coded to the border of the reference picture thus found, defining a boundary condition of a border that corresponds to the border motion vector data, from the reference picture based on the border motion-vector data,
[10.7.COD]	and generating an estimated video signal in each rectangular zone in the picture to be coded, that satisfies Poisson's Equation, thus producing the predictive picture;
[10.8.DEC]	performing entropy decoding to the data thus demultiplexed to generate, at least, the post-quantization data, the border motion-vector data and parameter data required for constructing a specific syntax structure;
[10.9.DEC]	performing inverse-quantization to the post-quantization data to generate post-quantization orthogonal transform coefficients data;
[10.10.DEC]	performing inverse-orthogonal transform to the post-quantization orthogonal transform coefficients data to produce a decoded residual picture of one video area;
[10.11.DEC]	defining a boundary condition of a border that corresponds to the border motion vector data, from the reference picture based on the border motion-vector data, and generate an estimated video signal in each rectangular zone in the picture to be coded, that satisfies Poisson's Equation, thus producing a first predictive picture;
[10.12.DEC]	combining the first predictive picture and the decoded residual picture to generate a decoded moving-picture signal; and
[10.13.DEC]	storing the decoded moving-picture signal for at least one picture as a reference picture.

Samsung Electronics Co., Ltd. ("Petitioner" or "Samsung") petitions for *Inter Partes* Review ("IPR") of claims 1-10 ("the Challenged Claims") of U.S. Patent No. 8,090,025 ("the '025 Patent"). Compelling evidence presented in this Petition demonstrates that Samsung will prevail.

I. REQUIREMENTS FOR IPR

A. Grounds for Standing

Petitioner certifies that the '025 Patent is available for IPR. This petition is being filed within one year of service of a complaint against Samsung. Samsung is not barred or estopped from requesting review of the Challenged Claims on the below-identified grounds.

B. Challenge and Relief Requested

Samsung requests institution of IPR and cancellation of the Challenged Claims based on the following grounds:

Ground	Claims	35 U.S.C. § 103
1A	1-10	Mualla, Shirani, and Saito
1B	1-10	Mualla, Shirani, Saito, and Stockhammer

The grounds of this petition are further supported by the expert testimony of Dr. Clifford Reader. *See* SAMSUNG-1003, ¶¶[1]-[214].

The '025 Patent claims priority to two foreign applications, the earliest of which was filed April 17, 2006. SAMSUNG-1001, 1:9-13. As shown below, each

prior art reference that forms the basis of Ground 1 of this Petition pre-dates the '025 Patent's earliest proclaimed priority date (April 17, 2006; "Critical Date"), which Petitioner does not concede. June Munford provides supporting testimony in her declaration regarding the public availability and authenticity of the asserted references. SAMSUNG-1018.

Reference	§102(a)/(b) Publication Date
Mualla	2002
Shirani	June, 2000
Saito	January, 2006
Stockhammer	July, 2003

C. Claim Construction

Petitioner submits that no formal claim constructions are necessary because "claim terms need only be construed to the extent necessary to resolve the controversy." *Wellman, Inc. v. Eastman Chem. Co.*, 642 F.3d 1355, 1361 (Fed. Cir. 2011); SAMSUNG-1003, ¶¶[69-75]. Petitioner reserves the right to respond to any constructions offered by Patent Owner or adopted by the Board. Petitioner is not conceding that each challenged claim satisfies all statutory requirements, nor is Petitioner waiving any arguments concerning claim scope or grounds that can only be raised in district court. For this petition, Petitioner applies prior art in a manner consistent with Patent Owner's allegations of infringement before the district court.

D. Level of Ordinary Skill in the Art

A person of ordinary skill in the art ("POSITA") relating to the subject matter of the '025 Patent as of April 17, 2006 would have had (1) at least a bachelor's degree in computer science, computer engineering, electrical engineering, or a related field, and (2) at least two years of industry experience in digital video processing, or a related field. SAMSUNG-1003, ¶¶[76]-[78]. Additional graduate education could substitute for professional experience, and *vice versa*. *Id*.

II. THE '025 PATENT

A. Brief Description

The '025 Patent is directed to "a moving-picture coding apparatus, method and program, and a moving-picture decoding apparatus, method and program that, without a smoothing procedure, can produce a predictive picture maintaining continuity of a video signal." SAMSUNG-1001, 2:30-38. In addition to known video coding and decoding techniques, the '025 Patent discloses a "controller" (117a and 313a) and a "switch" (102/103 and 701) for selecting between "ordinary" motion estimation/compensation and "zone-border" motion estimation/compensation." SAMSUNG-1001, 25:21-42, 26:24-48, 28:21-39, FIGS. 5 (showing an encoder) and 7 (showing a decoder). The '025 Patent discloses that these two modes of "ordinary" and "zone-border" motion estimation/compensation are "adaptively switched based on the data amount, thus producing high-quality decoded videos

with a fewer code amount overall." SAMSUNG-1001, 28:21-39. SAMSUNG-1003, ¶[79].

The "ordinary" motion estimation/compensation is performed by a "motion estimator" (502) and a "motion compensator" (503 and 702), which the '025 Patent describes in its FIG. 13 description. SAMSUNG-1001, 10:4-39, 21:63-22:14, 28:21-39, FIGS. 5, 7, 13. SAMSUNG-1003, ¶[80].

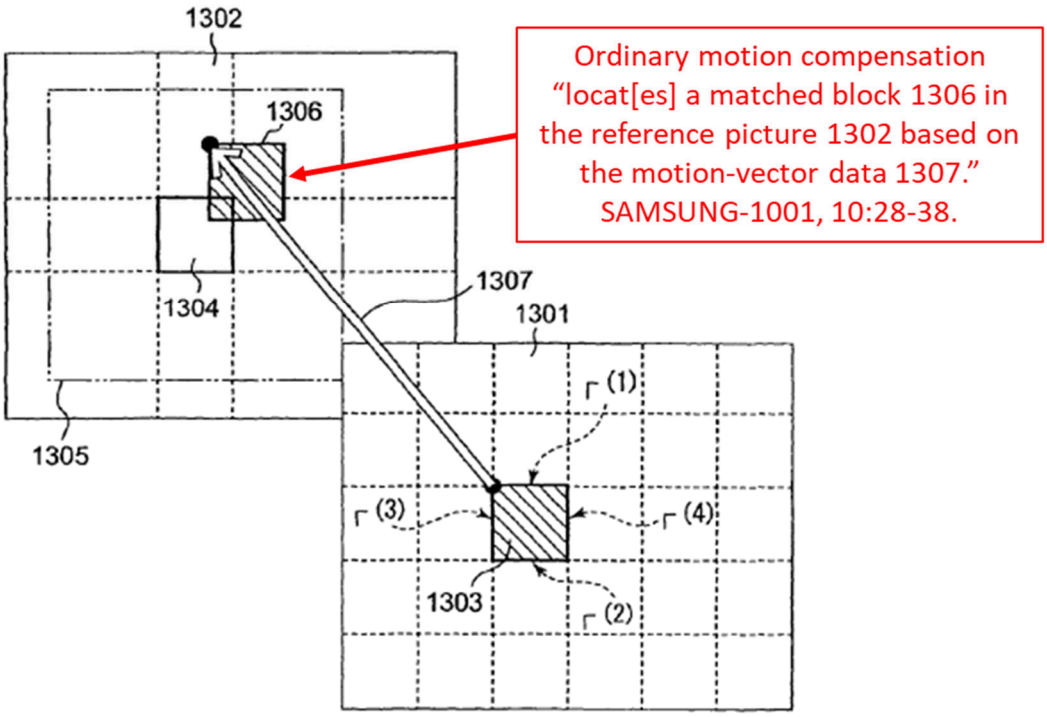

FIG. 13

SAMSUNG-1001, FIG. 13 (annotated).

The "zone-border" motion estimation/compensation includes two steps. SAMSUNG-1001, 10:39-12:20, FIGS. 14-17. In the first step, "motion-vector search is performed on block borders." SAMSUNG-1001, 10:39-45, FIGS. 14-15. Block borders are associated with a "boundary condition" which is "a gradient of a video signal on a block border." SAMSUNG-1001, 10:46-56. The zone-border motion estimator "obtains border gradient data that is a boundary condition of a block border in a picture to be coded" and then selects the "closest gradient to the gradient of an original signal on the block border." SAMSUNG-1001, 10:57-65, FIGS. 14-15 (reproduced below). In the second step, "Poisson's Equation is then applied based on the gradient data of the video signal thus defined to generate a predictive signal in block which is then applied to a predictive block 1606a." SAMSUNG-1001, 11:20-34, FIGS. 16-17 (reproduced below). SAMSUNG-1003, ¶¶[81].

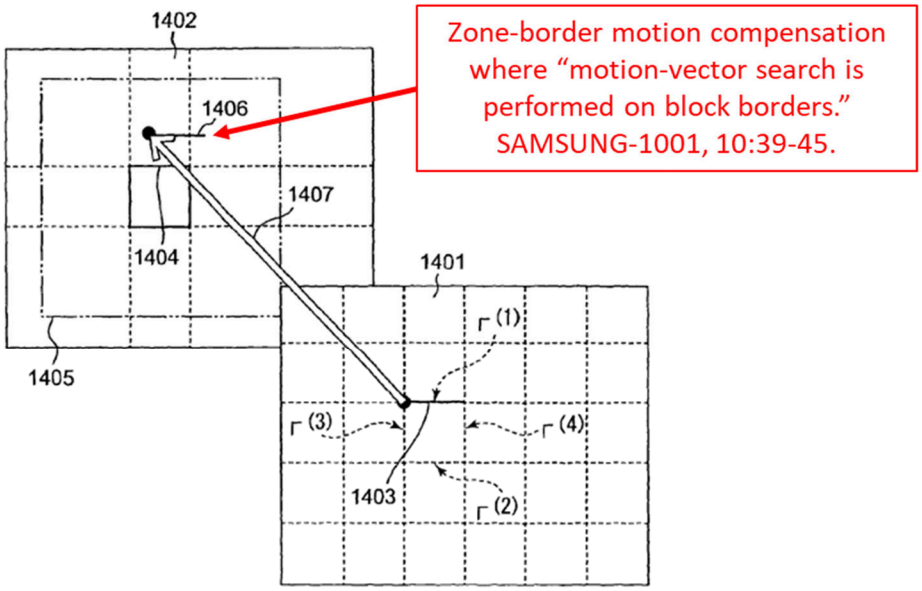

FIG. 14

SAMSUNG-1001, FIG. 14 (annotated).

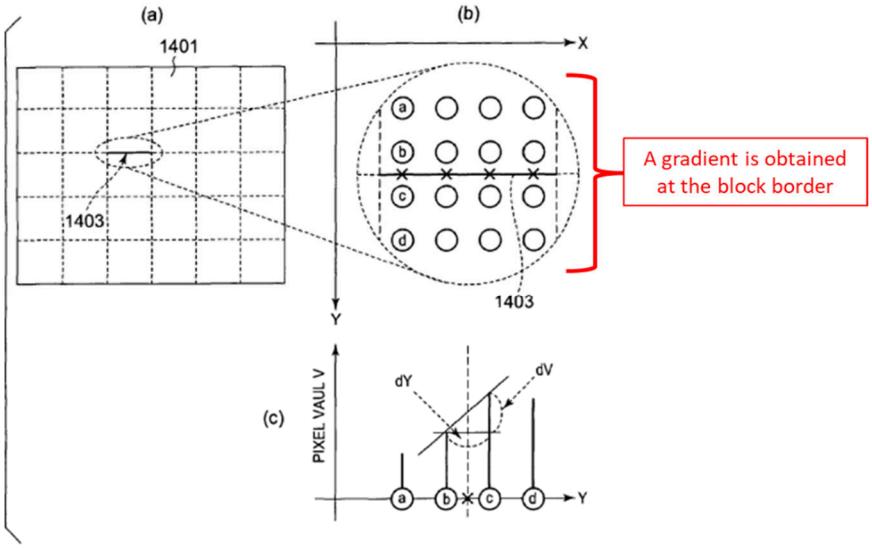

FIG. 15

SAMSUNG-1001, FIG. 15 (annotated).

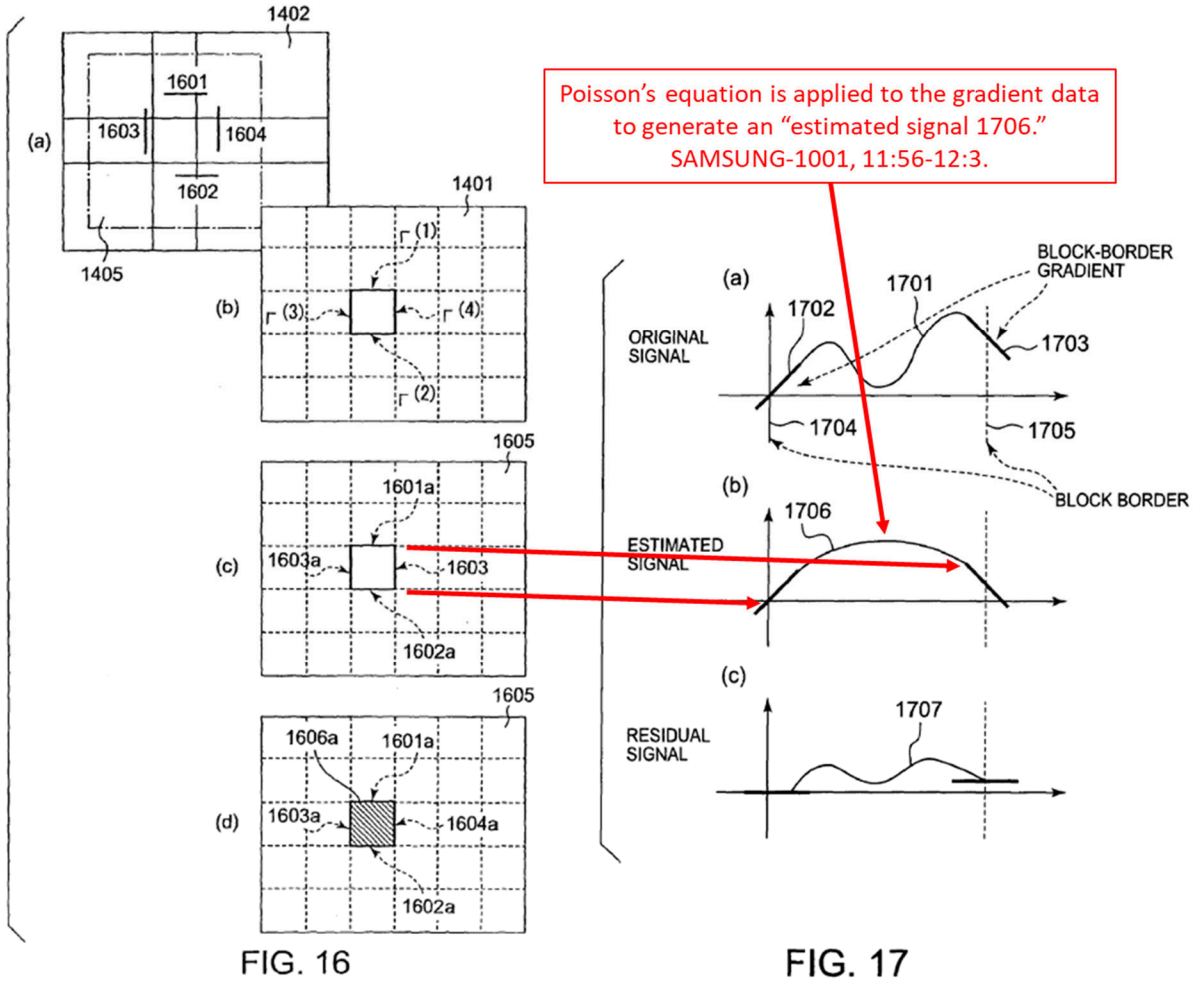

FIG. 16 FIG. 17

SAMSUNG 1001, FIGS. 16-17 (annotated).

B. Prosecution History

The Examiner for the '025 Patent did not issue any prior art rejections and there is no indication that the Examiner considered Mualla, Shirani, Saito, or Stockhammer, which render the challenged claims obvious, as discussed below. *See generally*, SAMSUNG-1002; SAMSUNG-1003, ¶[82].

III. THE CHALLENGED CLAIMS ARE UNPATENTABLE

A. [GROUND 1A/1B] – Claims 1-10 are rendered obvious by Mualla, Shirani, and Saito and claims 1-10 are rendered obvious by Mualla, Shirani, Saito, and Stockhammer

Below, the Petition presents a first ground based on Mualla, Shirani, and Saito and a second ground that additionally incorporates the disclosure of Stockhammer. In the first ground [1A], the Petition relies on the disclosure of Mualla, Shirani, and Saito and explains why this disclosure, when interpreted in view of the general knowledge of a POSITA, renders obvious claims 1-10. In the second ground [1B], the Petition relies on the same disclosure of Mualla, Shirani, and Saito and explanation of obviousness as presented in the first ground [1A] but turns to Stockhammer's disclosure to the extent its teachings would not have been within the general knowledge of a POSITA. Because the disclosure and corresponding obviousness arguments are similar for both grounds [1A/1B], the Petition discusses these grounds together for ease of presentation. SAMSUNG-1003, ¶¶[83]-[146]-[147].

1. Overview of Mualla (and Mualla and Stockhammer in Ground 1B)

Mualla is a treatise on "fundamentals and standards of video source coding" and addresses "areas of coding efficiency, computational complexity, and error resilience in a single volume." SAMSUNG-1005, 9-10. Dr. Reader provides a summary of the organization and structure of Mualla. SAMSUNG-1003, ¶[84].

Given its comprehensive nature, Mualla presents different details of encoders/decoders in different figures, depending on what is being explained, but these figures are substantively cumulative. SAMSUNG-1003, ¶[85]. To facilitate understanding, aggregated views of the relation between different figures of Mualla referenced throughout this petition are shown in Diagrams A and B, below, which are described in more detail by Dr. Reader. SAMSUNG-1003, ¶[85].

Diagram A (below) illustrates the relation between Figures 9.1 and 2.3 of Mualla. Figure 9.1 illustrates a "typical video communication system" which includes a "source encoder" designed to "compress the input video." SAMSUNG-1005, Figure 9.1, 227-228. The source encoder "consists of a *waveform encoder* and an *entropy encoder*." SAMSUNG-1005, 228. Further details of the source encoder are shown in Figure 2.3. The waveform encoder of Figure 9.1 "corresponds to the *mapper* and *quantizer* blocks" of Figure 2.3, whereas "the entropy encoder" of Figure 9.1 "corresponds to the *symbol encoder* block" of Figure 2.3. SAMSUNG-1003, ¶[86]; SAMSUNG-1005, Figures 9.1, 2.3, 228.

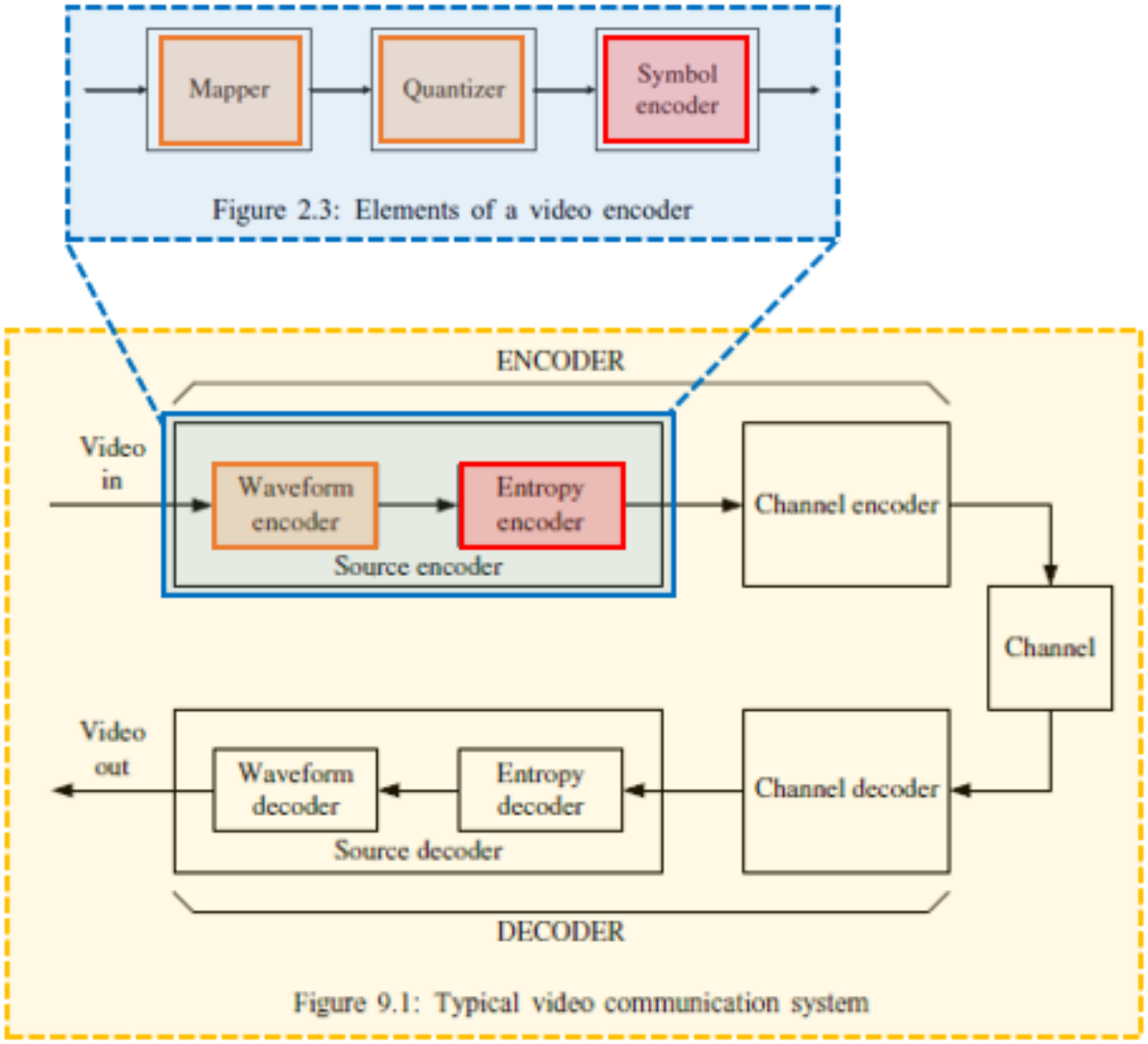

Diagram A (showing the relation between Mualla's Figures 9.1 and 2.3)

The "mapper" in Figure 2.3 "is designed to reduce **statistical redundancy** and make the data more amenable to compression in later stages." SAMSUNG-1005, 40; SAMSUNG-1003, ¶[87]. Mualla describes two types of statistical redundancy, namely "**spatial** (*intraframe*) and **temporal** (*interframe*) correlations between neighboring pels." *Id*.

Spatial (intraframe) redundancy is reduced by "intraframe coding" which

can be implemented by "**transform coding**." SAMSUNG-1005, 50-51. **Temporal** (interframe) redundancy can be reduced by "interframe coding" which can be implemented by "**motion estimation (ME)**" and "**motion compensation (MC)**." SAMSUNG-1005, 60-61; SAMSUNG-1003, ¶[88]. Mualla provides further details of these techniques in Figures 1.1 and 2.9, described next.

Diagram B (below) illustrates the relation between Figure 2.3 (annotated in blue in Diagram A, above) and Figures 1.1 and 2.9 of Mualla. Figure 2.9 discloses details of transform coding (to reduce spatial redundancy) while Figure 1.1 discloses details of motion estimation and motion compensation (to reduce temporal redundancy). Figure 1.1 illustrates a "typical video codec" which includes a "motion estimation (ME) block" and a "motion compensation (MC) block" (included as part of a local "decoder" implemented at the encoder) which are designed reduce temporal redundancy. SAMSUNG-1005, 26. Figure 1.1 also illustrates a "transform encoder" block. SAMSUNG-1005, Figure 1.1. Further details of the "transform encoder" are provided in Figure 2.9, which includes a "forward transform" designed "to decorrelate the pels of the input block" (reduce spatial redundancy). SAMSUNG-1005, 51-52; SAMSUNG-1003, ¶[89].

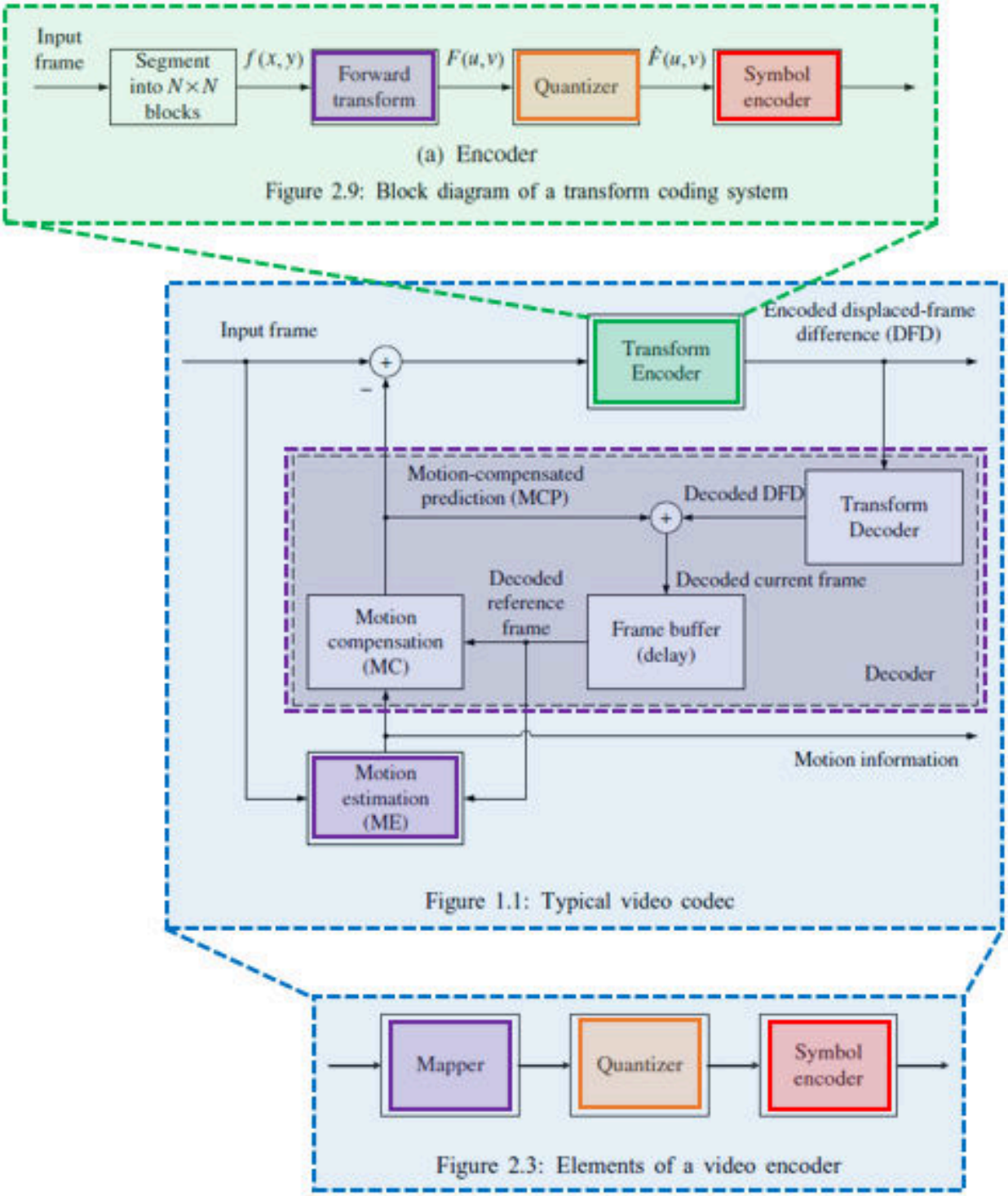

Diagram B (showing the relation between Mualla's Figures 2.3, 1.1, and 2.9)

Mualla further describes the "picture coding structure" of the "H.263

standard" in which "input video consists of a sequence of pictures (or frames)" and "[e]ach picture is divided into *groups of blocks* (GOBs)" where "[e]ach GOB is divided into *macroblocks* (MBs)" and each MB "consists of 16×16 samples of Y'" (16x16 pixel elements or "pels"). SAMSUNG-1005, 71-73, Figure 3.2; SAMSUNG-1003, ¶[90].

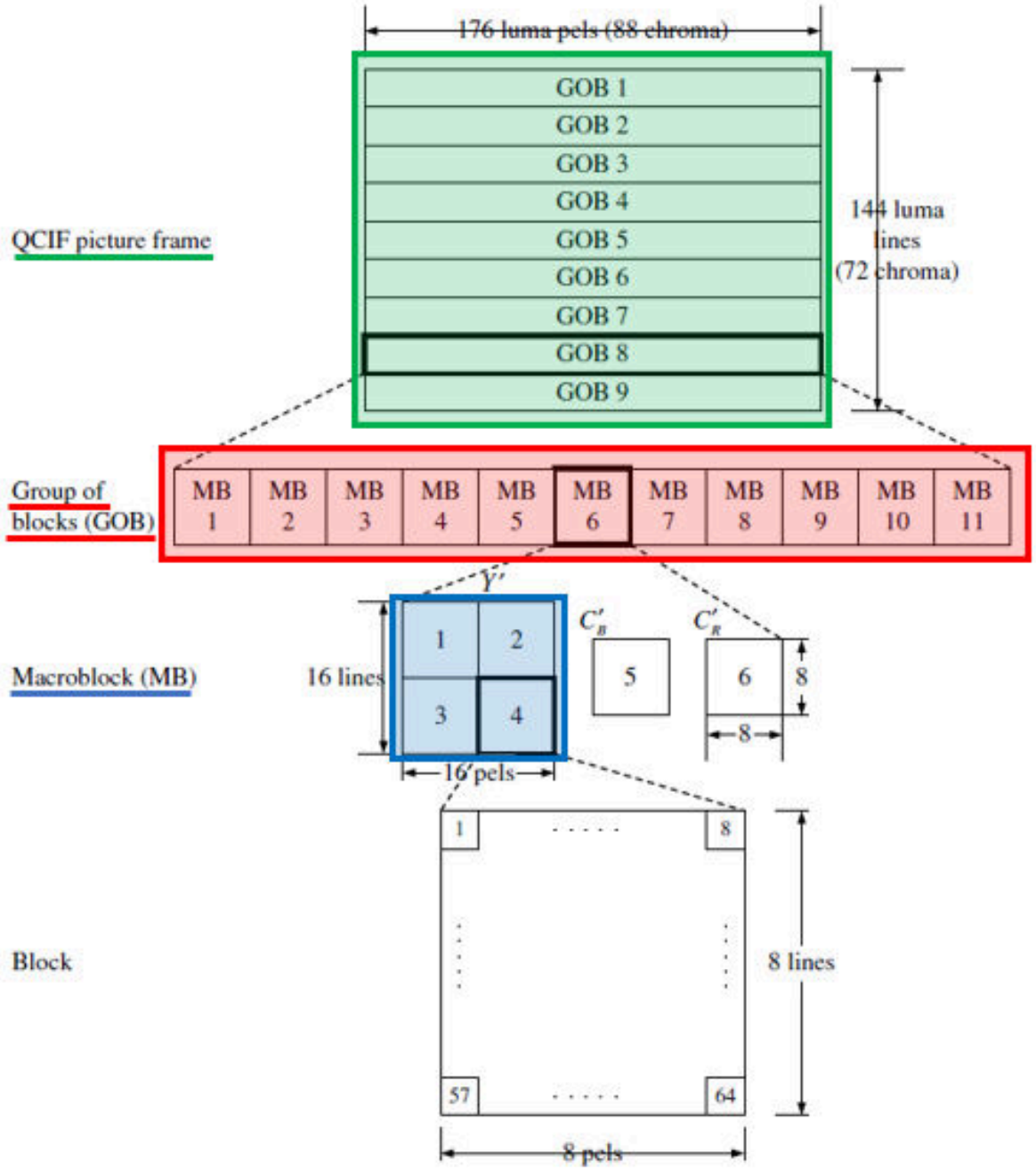

Figure 3.2: H.263 picture structure for a QCIF frame

SAMSUNG-1005, Figure 3.2 (annotated and color added)

When a picture frame of input video is encoded, "GOBs are coded from top to bottom in increasing number" and "[w]ithin each GOB, the MBs are coded from

left to right (and from top to bottom if the GOB contains more than one row of MBs) in increasing number." SAMSUNG-1005, 71, Figure 3.2; SAMSUNG-1003, ¶[91].

To encode an "input frame" (the "current frame") of video, the encoder:

(i) uses "motion estimation (ME)" and "motion compensation (MC)" to generate "a prediction of the current frame" and

(ii) subtracts the "prediction" of the current frame from the current frame "to produce an error signal known as the displaced-frame difference (DFD)" which is then encoded using the "transform encoder." SAMSUNG-1005, 26-27, Figure 1.1; SAMSUNG-1003, ¶[92].

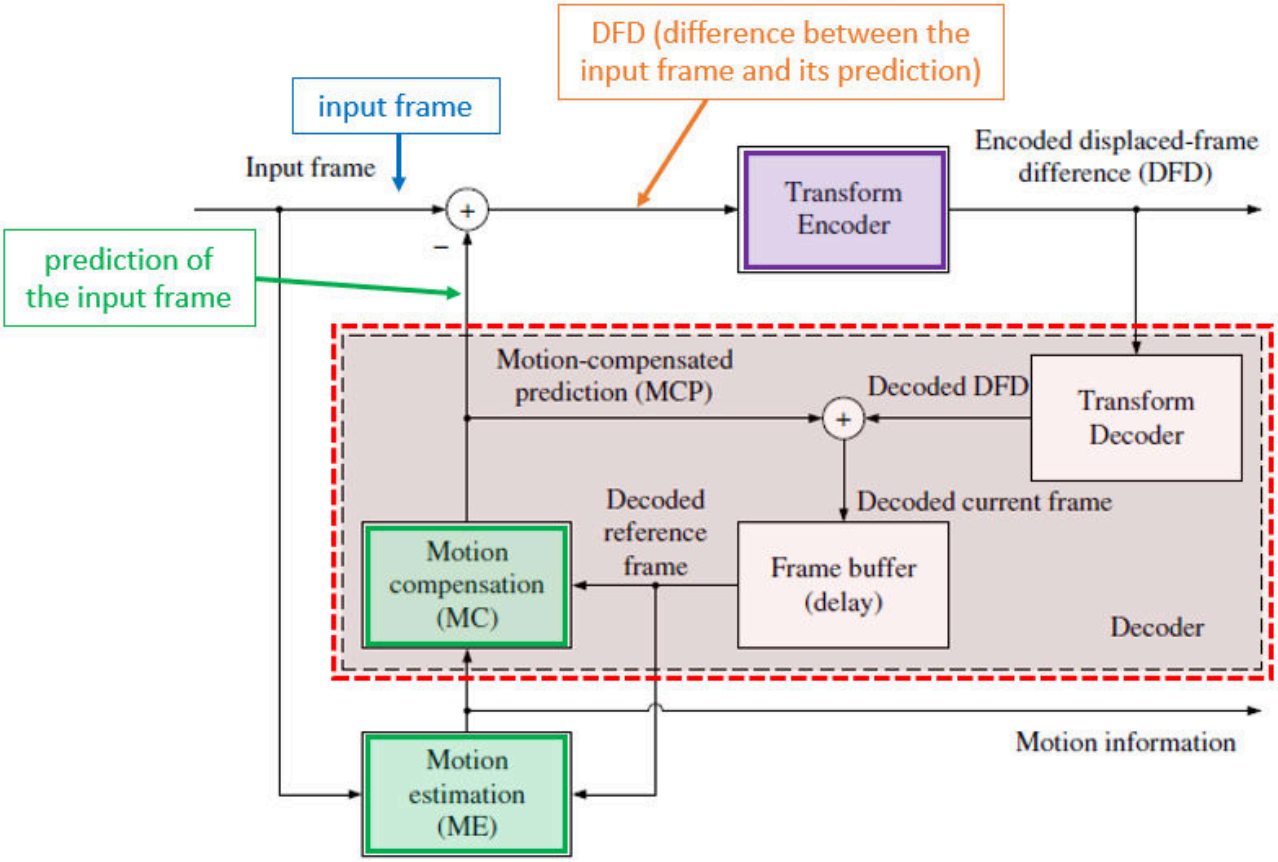

Figure 1.1: Typical video codec

SAMSUNG-1005, Figure 1.1 (annotated and color added)

Mualla provides further details of these two operations, summarized below. SAMSUNG-1003, ¶[93].

<u>(i) Generating the "prediction" of the current frame</u>

As shown in Figure 1.1 (below), for a given input frame, a "prediction" of the current frame is generated by a "motion compensation (MC) block" which uses "motion information" estimated by a "motion estimation (ME) block." SAMSUNG-1005, 26, *see also* 61, Figure 1.1; SAMSUNG-1003, ¶[94].

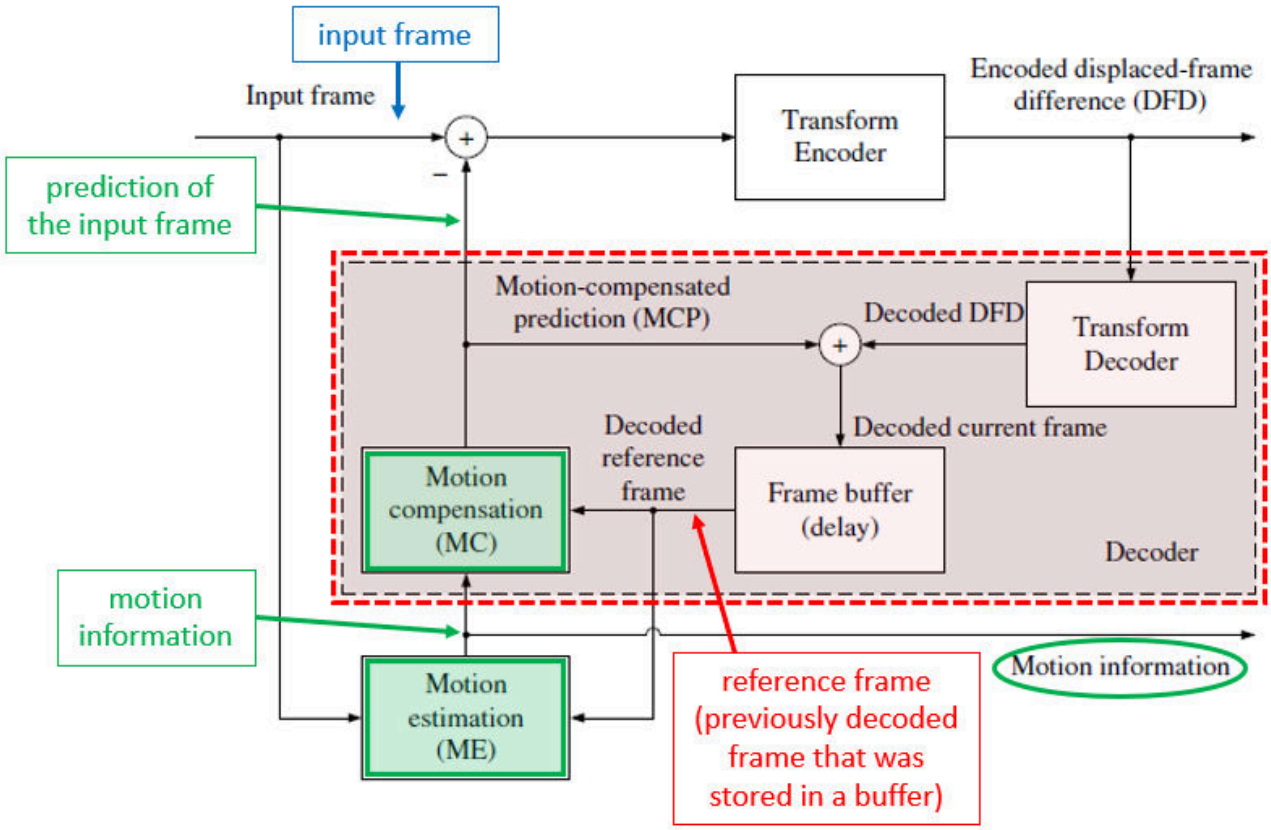

Figure 1.1: Typical video codec

SAMSUNG-1005, Figure 1.1 (annotated and color added)

The "motion information" is an estimate of "movement that occurred between the current frame and a reference frame (usually a previously decoded frame that was stored in a frame buffer)." SAMSUNG-1005, 26, *see also* 61. Mualla explains that "[t]he most commonly used ME method is the block-matching motion estimation (BMME) algorithm" in which the "motion of each block" is estimated "by searching for the best-match block in the reference frame." SAMSUNG-1005, 62. The motion of the current block is "represented by a motion vector, which is the displacement between the block and its best-match

block in the reference frame." *Id.*, Figure 2.16; SAMSUNG-1003, ¶[95].

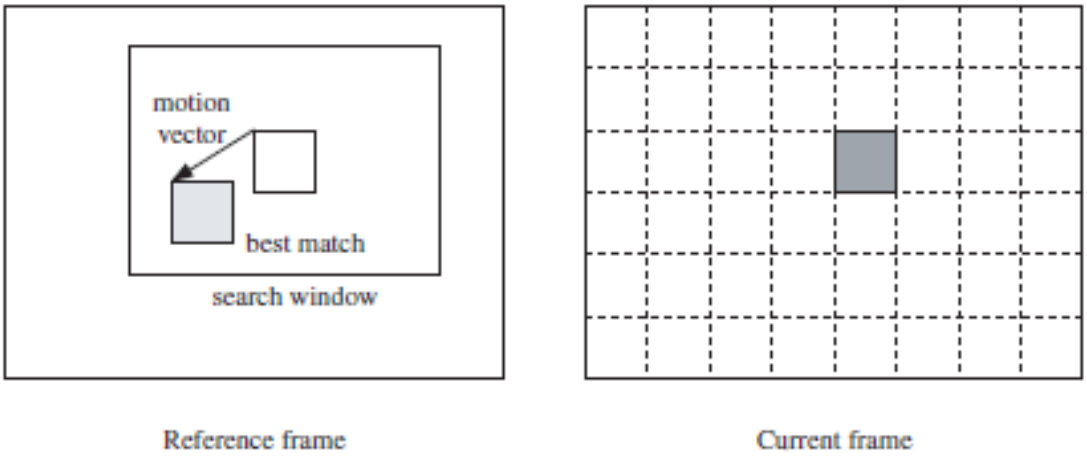

Figure 2.16: Block-matching motion estimation

SAMSUNG-1006, Figure 2.16.

After motion estimation (ME) process has estimated a motion vector, the encoder performs "motion compensation (MC)" in which the motion vector is utilized "to move the contents of the reference frame to provide a better prediction of the current frame." SAMSUNG-1005, 61; SAMSUNG-1003, ¶[96]. The resulting prediction (annotated in green in Figure 1.1, above) is the "the motion-compensated prediction (MCP) or the displaced-frame (DF)." *Id*.

The video encoder implements motion compensation (MC) by using a local "decoder" (annotated in red, below) that locally decodes a frame, stores the decoded frame in the local frame buffer, and generates the prediction of the current frame based on the previously decoded and stored frame. SAMSUNG-1005, 4, Figure 1.1; SAMSUNG-1003, ¶[97].

In addition to supplying the estimated motion vector to the motion compensation (MC) block, the motion vector is also encoded and output from the encoder (see "motion information" circled in the lower-right-hand corner of Figure 1.1, above). SAMSUNG-1005, Figure 1.1; SAMSUNG-1003, ¶[98]. For each macroblock, "[t]he estimated motion vector MV = (MVx, MVy) is predictively coded" which means that "the motion vector difference MVD = MV – MVP is encoded instead of the motion vector itself." SAMSUNG-1005, 74. The motion vector difference (MVD) is then "entropy coded" and the encoded MVD is output from the encoder as encoded motion information. SAMSUNG-1005, 74; SAMSUNG-1003, ¶[98].

(ii) Encoding the DFD

After a prediction of the current frame is generated in step (i), "the prediction is then subtracted from the current frame to produce an error signal known as the displaced-frame difference (DFD)" (shown below) which is encoded using a "transform encoder" to produce an "encoded ... DFD" which is output from the encoder. SAMSUNG-1005, Figure 1.1; SAMSUNG-1003, ¶[99].

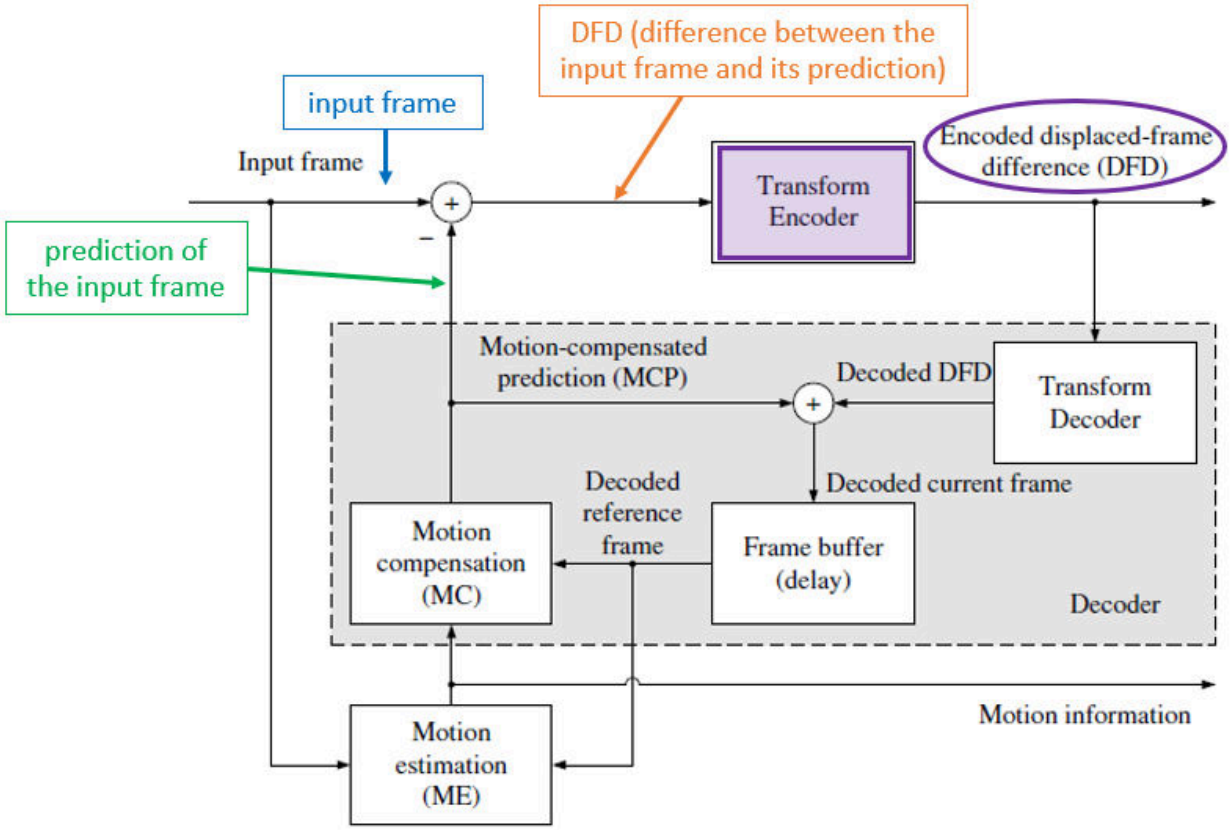

Figure 1.1: Typical video codec

SAMSUNG-1005, Figure 1.1 (annotated and color added)

Mualla describes details of the "transform encoder" in Figure 2.9 (below), in which "the input frame is first **segmented** into $N \times N$ blocks" and then "a unitary16 space-frequency **transform** is applied to each block to produce an $N \times N$ block of transform (spectral) coefficients that are then suitably **quantized** and and **coded**." SAMSUNG-1005, 51-52; SAMSUNG-1003, ¶[100].

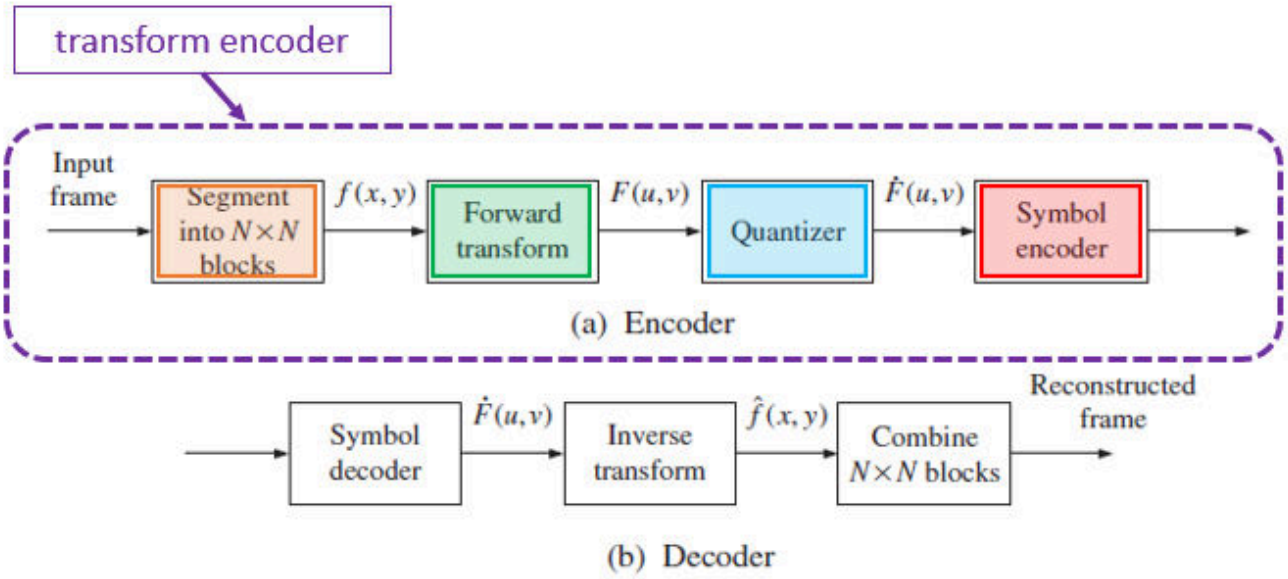

Figure 2.9: Block diagram of a transform coding system

SAMSUNG-1005, Figure 2.9 (annotated and color added)

Thus, the **encoder** outputs both the encoded DFD (circled in purple in Figure 1.1) and the encoded motion information (circled in green in Figure 1.1). SAMSUNG-1005, 26, 52, Figure 1.1; SAMSUNG-1003, ¶[101].

Mualla explains that "[a]t the **decoder**, the reverse operations are performed to obtain the output video." SAMSUNG-1005, 228. Figure 9.1 (below); SAMSUNG-1003, ¶[102].

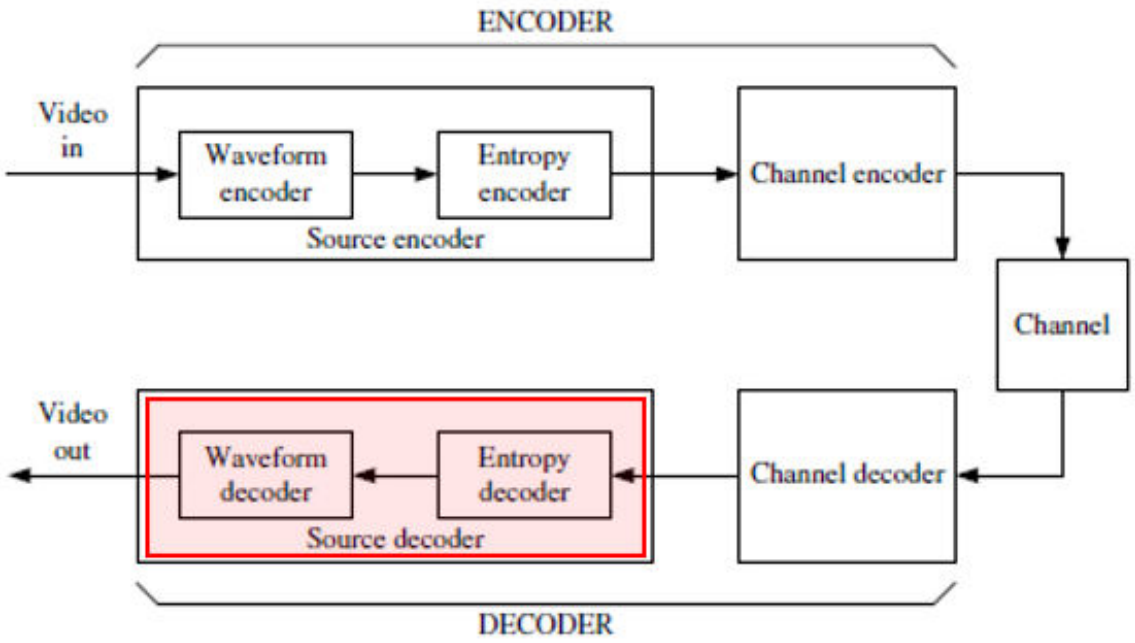

Figure 9.1: Typical video communication system

SAMSUNG-1005, Figure 9.1 (color added)

These reverse operations in the "decoding process" include (i) "motion vector decoding" in which "for each transmitted inter MB, the decoder calculates the same motion vector predictor MVP used at the encoder and adds it to the decoded motion vector difference MVD to obtain the decoded motion vector MV," (ii) "motion compensation" in which "[t]he decoded motion vector is used to compensate" the macroblock, (iii) "inverse quantization" for "reconstructing an approximation of the original coeffcient," (iv) "inverse transform" in which "[t[he reconstructed block of coefficients is processed by a separable 2-D 8x8 inverse DCT," and (v) "reconstruction of blocks" in which "the reconstructed block is formed by summing the motion-compensated prediction and the result of the

inverse DCT." SAMSUNG-1005, 76; SAMSUNG-1003, ¶[103].

Error Resilience Techniques

In addition to the conventional video coding and decoding operations discussed above, Mualla further describes techniques for "error resilience" in video coding, including "error detection and error control techniques" applicable to the H.263 standard. SAMSUNG-1005, 11, 227-251. Mualla explains that "when transmitted over a mobile channel, compressed video can suffer severe degradation and the use of error-resilience techniques is vital." SAMSUNG-1005, 25; SAMSUNG-1003, ¶[104].

To implement error resilience, Mualla describes a system in which "[t]he decoder was modified to perform error detection by detecting syntax and semantic violations." SAMSUNG-1005, 265. In particular, "[w]hen an error is detected, the decoding process is stopped" and "[a]ll macroblocks between the point where the error was detected and the synchronization point are marked as damaged macroblocks." *Id*. The damaged macroblocks are recovered by using an error control technique called "**hybrid** error concealment" in which "**temporal** concealment is first used to get an initial estimate of the damaged block" and "this initial estimate is then refined using **spatial** concealment." SAMSUNG-1005, 242-246, Figures 9.7, 9.8 (reproduced below); SAMSUNG-1003, ¶[105].

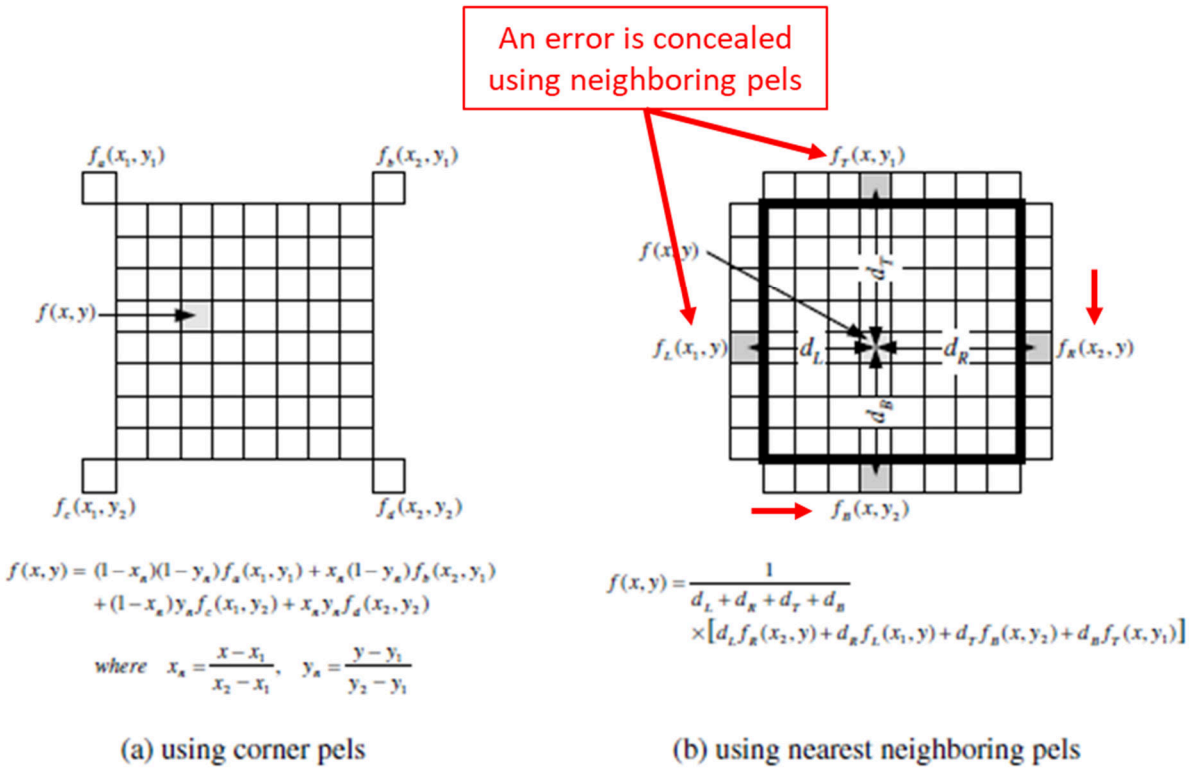

(a) using corner pels

(b) using nearest neighboring pels

Figure 9.7: Error concealment using spatial interpolation

SAMSUNG-1005, FIG. 9.7 (annotated).

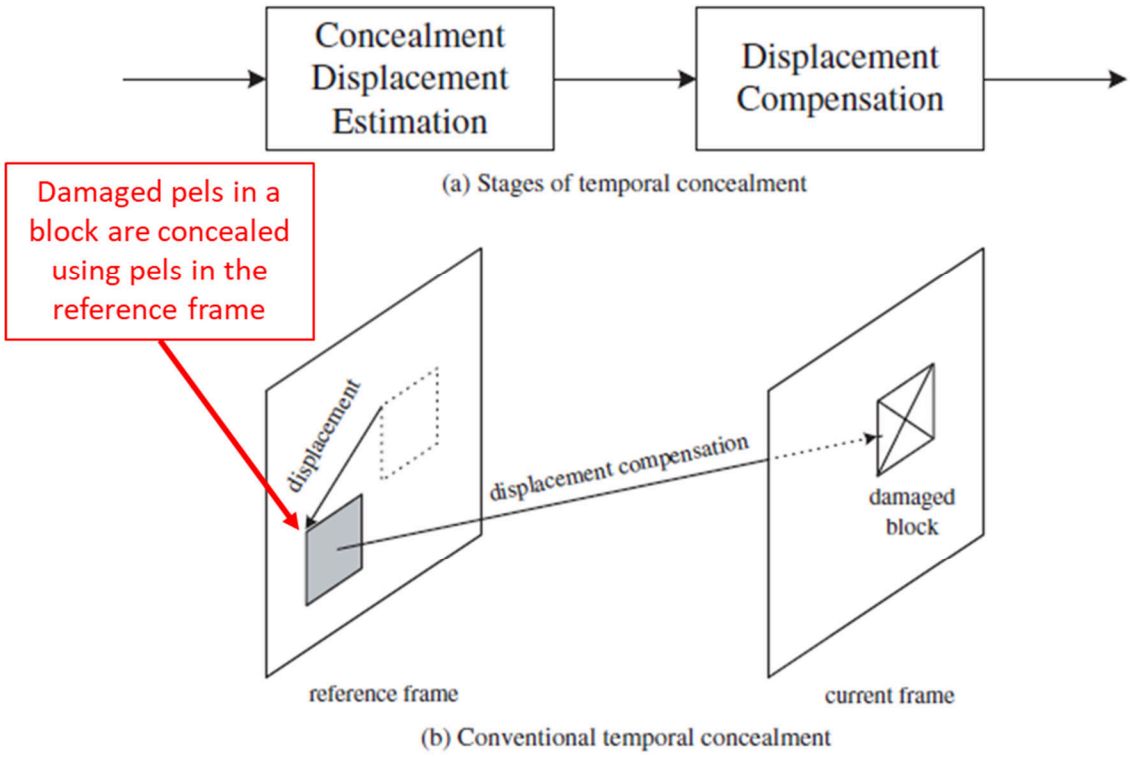

Figure 9.8: Temporal error concealment

SAMSUNG-1005, FIG. 9.8 (annotated).

Furthermore, Mualla describes that error concealment can be performed at **both** the **encoder** and the **decoder**. SAMSUNG-1005, 246-250. For example, "the encoder and decoder cooperate to minimize the effects of transmission errors" and in particular "coding efficiency can also be improved by **performing error concealment** in the **encoder** so that both encoder and decoder use the same reference frames for prediction." SAMSUNG-1005, 249. To implement error concealment at the encoder, Mualla describes "**interactive** techniques" in which "the decoder uses a feedback channel to inform the encoder about which parts of the transmitted video have been received in error" and "[b]ased on this feedback

information, the encoder adjusts its operation to combat the effects of such errors." SAMSUNG-1005, 224. Mualla explains that "[w]hen feedback information is received, the encoder can reconstruct the error propagation process" so that "the encoder can track the error propagation." SAMSUNG-1005, 247; SAMSUNG-1003, ¶[106]. Mualla also cites to numerous corroborating references, such as Girod (SAMSUNG-1008) and Wada (SAMSUNG-1017), for additional details of implementing "interactive" error concealment at both the encoder and decoder. SAMSUNG-1005, 246-250. Dr. Reader provides a summary of these corroborating references cited in Mualla. SAMSUNG-1003, ¶[107].

Therefore, in view of the teachings of Mualla (and the references cited therein which reflect knowledge in the art at the time of Mualla's teachings), a POSITA would have understood or found obvious that (i) an H.263-based **decoder** performs *error detection* to detect errors and *error concealment* to recover from those errors, and (ii) an H.263-based **encoder** receives feedback from the decoder regarding errors that were detected, and performs the same *error concealment* to replicate those same errors in its local decoder so as to use the same reference frames for error prediction. SAMSUNG-1003, ¶[108].

Furthermore, Stockhammer (SAMSUNG-1009, which cites both Girod and Wada as references 62 and 63, respectively, for teachings of error tracking in H.263 systems) provides illustrative diagrams for implementing feedback-based

error detection and error correction in an H.264-based system. SAMSUNG-1009, 8, Fig. 6 (reproduced below). Fig. 6 of Stockhammer illustrates an encoder (annotated in blue) that implements a local "decoder" (annotated in red) to perform "video encoding" to generate "packets." *Id*. The packets are transmitted over a "packet loss channel" in which packets are randomly lost during transmission. *Id*. At the remote decoder (on the right-hand side, annotated in red), "[t]he decoder processes the received sequence of packets" such that "received packets are decoded as usual" whereas "for the lost packet, an error-concealment algorithm has to be invoked." SAMSUNG-1009, 8; SAMSUNG-1003, ¶¶[109]-[110]. Furthermore, a "back-channel from the decoder to the encoder is available which allows reporting ... of the observed channel behavior at the decoder to the encoder." *Id*.

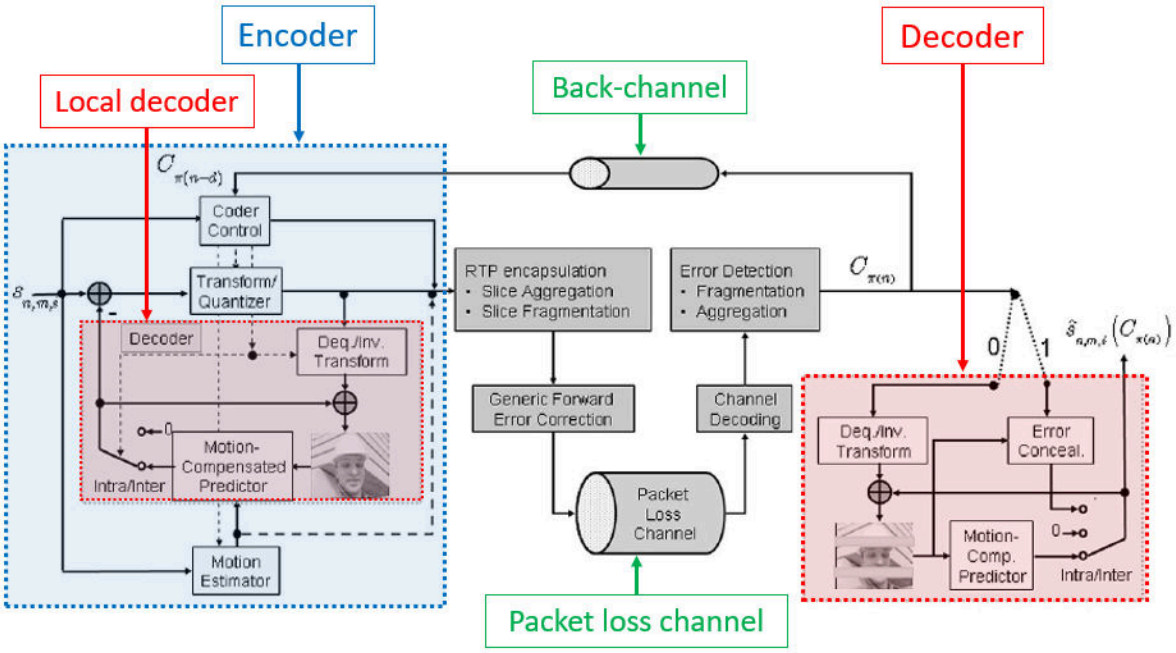

Fig. 6. H.264/AVC in IP-based packet-lossy environment with RTP encapsulation, generic forward error correction, delayed feedback information, and error concealment.

SAMSUNG-1009, FIG. 6 (annotated and color added).

To the extent the implementation details of Stockhammer were not already understood to a POSITA with knowledge of error concealment techniques (e.g., from reviewing the disclosures of Mualla and Shirani), a POSITA reviewing the teachings of Stockhammer would have also been motivated to combine these same implementation details into the teachings of Mualla (e.g., thus creating the Mualla-Shirani-Saito-Stockhammer combination of Ground 1B). SAMSUNG-1009, 8-11; SAMSUNG-1003, ¶[111]. Indeed, as Dr. Reader explains, "although the techniques of Stockhammer were well understood, a POSITA would have naturally searched for specific implementation examples (e.g., Stockhammer's FIG. 6 above) to refine the broader disclosure of Mualla." *Id.*

To summarize, Mualla provides a self-contained teaching of video coding systems, including feedback-based error tracking in which **(i)** an H.263-based **decoder** performs *error detection* to detect errors and *error concealment* to recover from those errors, and **(ii)** an H.263-based **encoder** receives feedback from the decoder regarding errors that were detected, and performs the same *error concealment* to replicate those same errors in its local decoder so as to use the same reference frames for error prediction. Mualla refers to (i) as a "post-processing" technique and refers to (ii) as an "interactive" technique, and Mualla explains that a "combination" of these techniques can be employed in practical systems. SAMSUNG-1005, 251; SAMSUNG-1003, ¶[112].

These teachings of Mualla are corroborated by Girod and Wada (both cited in Mualla) and Stockhammer (which also cites to Girod and Wada) which provide additional details and diagrams for the same concepts disclosed in Mualla. SAMSUNG-1003, ¶[113].

Therefore, in view of the teachings of Mualla (as corroborated by Girod, Wada, and Stockhammer), a POSITA would have understood or found obvious that feedback-based error resilience at both the encoder and decoder can be implemented by a system such as the one shown in Diagram C, below. SAMSUNG-1009, Fig. 6; SAMSUNG-1003, ¶[114]. In this diagram, Figure 6 of Stockhammer

has been modified to show an example of how error concealment would be implemented at the encoder, based on the teachings of Mualla. SAMSUNG-1009, Fig. 6; SAMSUNG-1003, ¶[114]. The modified portions of Stockhammer's Fig. 6 are annotated and shaded in red in Diagram C. SAMSUNG-1009, Fig. 6; SAMSUNG-1003, ¶[114]. As shown, the modification simply amounts to replacing the encoder's local "decoder" with an analogous error concealment-enabled structure as already implemented in the remote decoder. SAMSUNG-1009, Fig. 6; SAMSUNG-1003, ¶[114].

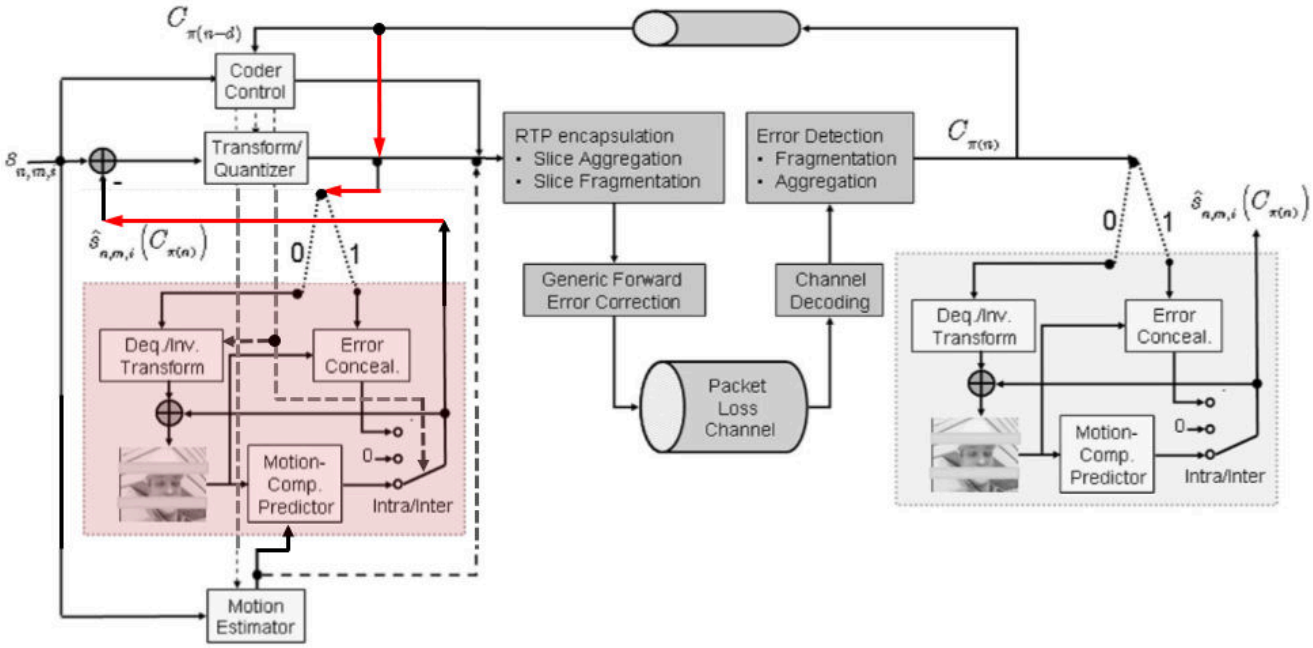

Diagram C (video coding system with interactive error concealment)

Diagram D, below, illustrates a detailed view of the modified encoder of Diagram C. SAMSUNG-1009, Fig. 6; SAMSUNG-1003, ¶[115]. As discussed pre-

viously, the modified encoder implements a local decoder (shaded in red) that performs error concealment. SAMSUNG-1009, Fig. 6; SAMSUNG-1003, ¶[115].

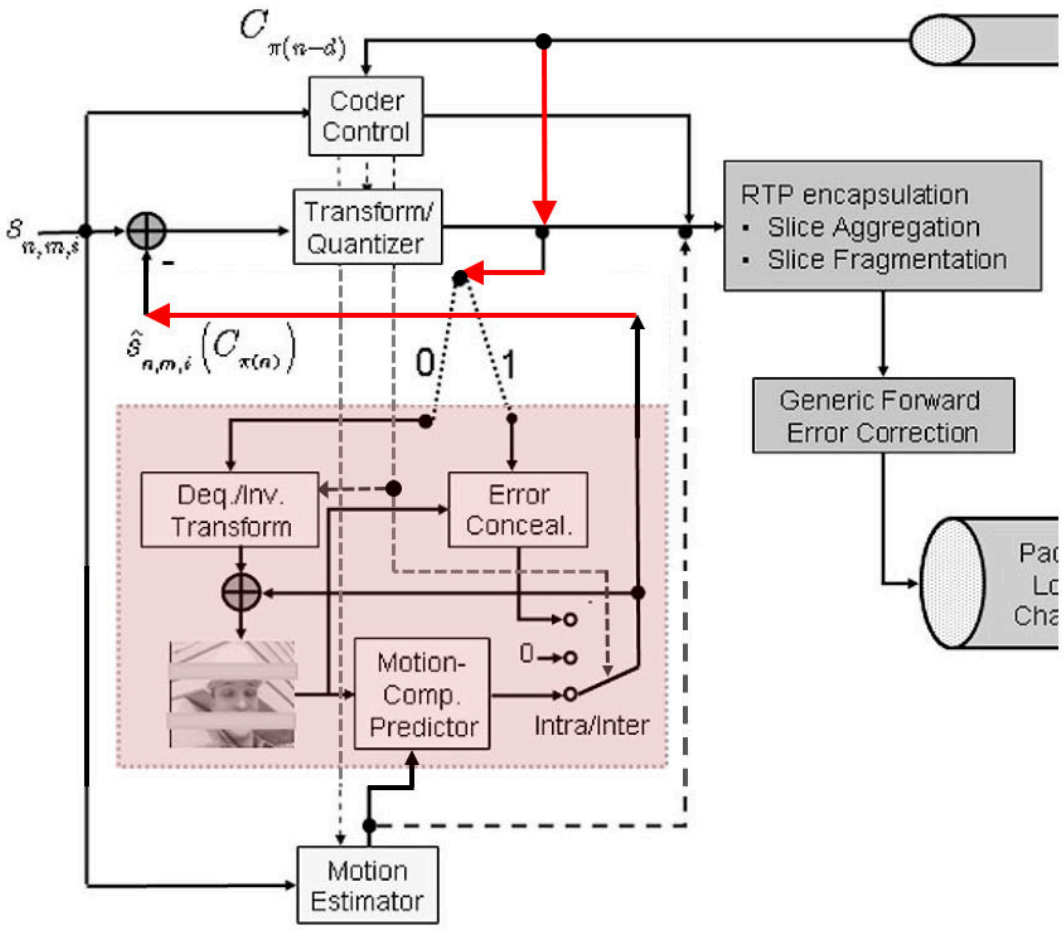

Diagram D (detailed view of the modified encoder of Diagram C)

The modified encoder receives feedback (annotated red line in the upper part of Diagram D) via the "back-channel" regarding blocks that were received in error at the remote decoder (not shown in Diagram D, refer to Diagram C). SAMSUNG-1009, 8, Fig. 6; SAMSUNG-1003, ¶[116]. Based on this feedback, a

selector (the binary selector shown above the red shaded area in Diagram D) selects between "0" (if the feedback indicates an error in a macroblock) or "1" (if the feedback indicates no error in a macroblock). SAMSUNG-1009, 8, Fig. 6; SAMSUNG-1003, ¶[116]. If the feedback indicates no error ("0"), then the modified encoder performs the conventional steps of dequantization and inverse transform (upper-left-hand block in the red shaded area of Diagram D) with "motion compensated-predictor" (lower block in the red shaded area of Diagram D) and the second selector at the bottom-right-hand corner of the red shaded area is in the lower-most position. SAMSUNG-1009, 8, Fig. 6; SAMSUNG-1003, ¶[116]. Otherwise, if the feedback indicates an error ("1"), then the modified encoder performs "error concealment" (upper-right-hand block in the red shaded area of Diagram D) and the second selector at the bottom-right-hand corner of the red shaded area is in the upper-most position. SAMSUNG-1009, 8, Fig. 6; SAMSUNG-1003, ¶[116].

Specifically, in case of error ("1"), POSITA would have understood or found obvious, based on the technique of "error tracking" as described in Mualla (as corroborated by Wada) that "the encoder can track the error propagation from the original occurrence up to the current frame" (SAMSUNG-1005, 247) by using a method in which "[t]he same error concealment as is performed at the receiver is carried out in the local-decoded frame stored" and then "[l]ocal decoding is reexecuted from the point of the concealed block(s) up to the currently encoded block"

(SAMSUNG-1017, 2); SAMSUNG-1003, ¶[117].

In both scenarios of the feedback indicating error and no error, the encoder's local "decoder" generates a "reconstructed image" (i.e., the aggregate signal $\hat{s}_{n,m,i}(o, C_{\pi(n)})$ that labels the red annotated line on the left-hand side of Diagram D) which is provided to a subtractor (left-hand side of Diagram D) which subtracts the reconstructed image from the input image (i.e., the input signal $s_{n,m,i}$). SAMSUNG-1009, Fig. 6; SAMSUNG-1003, ¶[118]. This is consistent with the teachings of Mualla for conventional encoding (SAMSUNG-1005, Figure 1.1, discussed above) where the encoder's local decoder generates a "prediction of the input frame" (the reconstructed image) is subtracted from the input frame (the input image).

Therefore, in view of the teachings of Mualla (as corroborated by Girod, Wada, and Stockhammer), a POSITA would have understood or found obvious that an error resilience technique (such as the "hybrid error concealment" technique described in Mualla) can be implemented at both the encoder and the decoder in a feedback-based video coding system. SAMSUNG-1003, ¶[119].

2. Overview of Shirani

Shirani is cited in Mualla (as reference [199]) for teaching details of the "**hybrid** error concealment" technique that was described in Mualla. SAMSUNG-1005, 246. Specifically, Shirani teaches a "**two-stage** error-concealment method

for block-based compressed video which was transmitted in an error-prone environment" in an H.263 video coding framework. SAMSUNG-1006, Abstract; 4. Shirani's "**first** stage" "obtain[s] an initial estimate of the missing block using information from the previous frame," which Shirani refers to as "**temporal**" concealment (consistent with Mualla). SAMSUNG-1005, 243-245; SAMSUNG-1006, 1-2. In Shirani's "**second** stage," "the information around each missing block is used to refine the initial estimate," which Shirani refers to as "**spatial**" concealment (consistent with Mualla). SAMSUNG-1005, 242-243; SAMSUNG-1006, 1-3; SAMSUNG-1003, ¶[120].

The **first stage** (temporal error concealment) utilizes motion vectors of "subblocks adjacent to the missing block" (subblocks "adjacent above and left" as well as "subblocks ... to the right and below of the missing block") to derive an "initial estimate" of the missing block that has the smallest sum of "border errors." SAMSUNG-1006, 3. Shirani illustrates an example of "subblocks adjacent to the missing block, i.e., *u1, u2*, *l*1, and *l*2 in Fig. 1(a)." SAMSUNG-1006, 3, FIG. 1(a); SAMSUNG-1003, ¶[121].

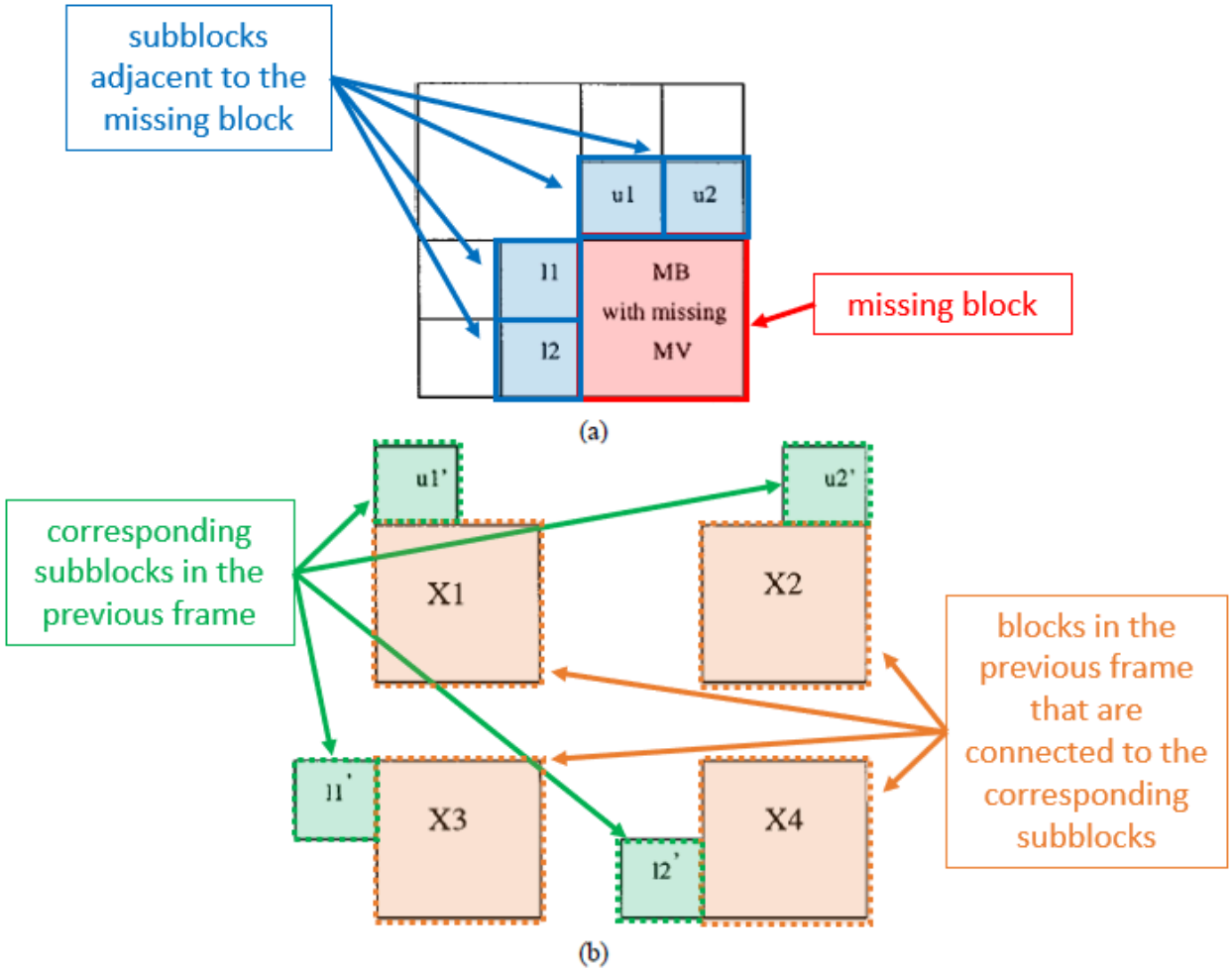

Fig. 1. (a) The four subblocks, (b) their corresponding subblocks in the previous frame, and the blocks connected to them.

SAMSUNG-1006, FIG. 1(a) (annotated and color added).

Once these adjacent subblocks (*u1, u2*, *l*1, *l*2) are identified, "for each of these subblocks, a corresponding subblock in the previous frame is determined" (denoted *u*1', *u*2', *l*1', and *l*2' at the bottom of FIG. 1(a) of Shirani). SAMSUNG-1006, 3. Then, "four blocks, namely X1, X2, X3, and X4, which are connected to *u*1', *u*2', *l*1', and *l*2', and (respectively), are determined" and "a block from the

above four blocks [(X1, X2, X3, and X4)] that minimizes the squared sums of border errors, between the estimated block and its adjacent above and left blocks, is selected." SAMSUNG-1006, 3; SAMSUNG-1003, ¶[122]. This is accomplished by defining "border error[s]" in "terms of pixels," including an error for the "bottom line pixels of the block to the top of the missing block" and an error for the "right column pixels of the block to the left of the missing block" and applying the same technique to define border errors for pixels adjacent to "the subblocks ... to the right and below of the missing block." *Id*.

To estimate the motion of the adjacent subblocks (*u1, u2*, *l*1, *l*2), Shirani discloses that "the search for displacement of each of the subblocks is restricted to a set of candidate motion vectors" which can include "the motion vectors of available neighboring blocks, the median of the motion vectors of available neighboring blocks, the average of the motion vectors of available neighboring blocks." SAMSUNG-1006, 3; SAMSUNG-1003, ¶[123]. Furthermore, although the above description focused on adjacent subblocks above and to the left of the missing block, Shirani also discloses that "the same method can be extended to include the subblocks of the blocks to the right and below of the missing block." SAMSUNG-1006, 3.

For the **second stage** (spatial error concealment), Shirani describes various techniques that can "refine the initial estimate" (obtained in the first stage, above)

by utilizing "information around each missing block." SAMSUNG-1006, 1, 3. As examples of "spatial error concealment," Shirani describes techniques in which neighboring pixels around the missing block are used to "refine the initial estimate" that was obtained in the first stage. SAMSUNG-1006, 1 ("each pixel in a damaged block is interpolated from the corresponding pixels in its four neighboring blocks"), 3 ("[i]n the second stage of our proposed error-concealment method, the information around each missing block is used to refine the initial estimate"); SAMSUNG-1003, ¶[124].

3. Combination of Mualla and Shirani (and the Combination of Mualla-Stockhammer and Shirani in Ground 1B[1])

As discussed above, Mualla describes "hybrid error concealment" for "error resilience" in video coding that implements both temporal and spatial concealment. SAMSUNG-1005, 241-246. Mualla specifically cites Shirani for details of this hybrid error concealment technique. SAMSUNG-1005, 241-246. Given Mualla's

[1] The subsequent discussion in Sections III.A.3, III.A.5, and III.A.6 focuses on the combination of Mualla with Shirani and Saito, but is similarly applicable to the combination of Mualla-Stockhammer with Shirani and Saito in Ground 1B, with Stockhammer supplementing Mualla merely to provide illustrative details of implementing what a POSITA would have understood or found obvious to already be taught by Mualla's error concealment disclosure.

explicit reference to Shirani, a POSITA would have naturally looked to Shirani and its "two-stage error concealment" technique for further details of how to implement "hybrid error concealment" as described in Mualla. SAMSUNG-1005, 246; SAMSUNG-1006, 1-6; SAMSUNG-1003, ¶[127]. A POSITA implementing the supplemental teachings of Shirani into the existing disclosure of Mualla would have created the Mualla-Shirani combination (and the Mualla-Stockhammer-Shirani combination in Ground 1B). SAMSUNG-1003, ¶[127].

In particular, the hybrid error concealment techniques of the Mualla-Shirani combination perform error detection to detect whether errors exist in a frame (also referred to as a picture). SAMSUNG-1005, 241-246; SAMSUNG-1006, 2-4. If errors are detected in a frame/picture, a two-stage motion-compensated error concealment algorithm is applied to perform both temporal and spatial concealment to conceal the errors and generate a predicted frame. SAMSUNG-1005, 242-246; SAMSUNG-1006, 2-4. Otherwise, if no errors are detected, conventional motion compensation is applied. *Id*. Specifically, as discussed above, the two-stage (hybrid) error concealment algorithm of the Mualla-Shirani combination implements a "first stage" which applies "temporal" concealment and a "second stage" which applies "spatial" concealment. SAMSUNG-1005, 242-245; SAMSUNG-1006, 1-3; SAMSUNG-1003, ¶[128].

Furthermore, in the combination of Mualla and Shirani, and in particular in

Shirani's "two-stage error concealment" technique, Shirani describes various alternatives for the "second stage" (in which "spatial" concealment is performed). As discussed above, as an example of the second stage, Shirani describes a spatial concealment technique in which "each pixel in a damaged block is interpolated from the corresponding pixels in its four neighboring blocks such that the total squared border error is minimized." SAMSUNG-1006, 1; SAMSUNG-1003, ¶[129].

Furthermore, as discussed above, the two-stage hybrid error concealment is implemented in both the encoder and the decoder ("interactive error concealment"), as taught by Mualla, so that the encoder and decoder can "cooperate to minimize the effects of transmission errors" and in particular so that "coding efficiency can also be improved by performing error concealment in the encoder so that both encoder and decoder use the same reference frames for prediction." SAMSUNG-1005, 246-250; SAMSUNG-1003, ¶[130].

As explained below in more detail, combining Mualla and Shirani would have been obvious at least because such a combination would have merely involved (1) combining prior art elements according to known methods to yield predictable results; and the (2) use of known techniques to improve similar devices in the same way. *See KSR Int'l Co. v. Teleflex Inc.,* 550 U.S. 398, 415-421, 82 USPQ2d 1385, 1395-97 (2007)*; MPEP 2143*; SAMSUNG-1003, ¶[131]. Indeed,

Mualla describes a similar hybrid error concealment technique as Shirani, and the combination would have simply involved adding Shirani's teachings into the compatible teachings of Mualla, thus, for at least this reason, making the Mualla-Shirani combination predictable and foreseeable with a reasonable expectation of success. SAMSUNG-1005, 246; SAMSUNG-1006, 1-6; SAMSUNG-1003, ¶¶[131]. Moreover, because Mualla explicitly cites to Shirani's teachings when discussing its own techniques of hybrid error concealment, the use of Shirani's techniques in Mualla would have improved a similar device in the same way. SAMSUNG-1005, 246. Additionally, Mualla and Shirani implement their teachings in similar video coding standards (e.g., H.263). SAMSUNG-1005, 71-94, 231; SAMSUNG-1006, 4-5; SAMSUNG-1003, ¶[131].

4. Overview of Saito

Saito discloses "image approximation" using techniques based on solving Poisson's equation. SAMSUNG-1007, 6, 27; SAMSUNG-1003, ¶[125]. Saito expresses a goal of improving "the perceptual quality of these approximations" and a desire for a "perceptually correct metric" that can improve the "visual quality" of approximated images. SAMSUNG-1007, 18; SAMSUNG-1003, ¶[125]. Saito also discusses the relevance of "psychophysical experiments" in selecting appropriate image approximation techniques that improve "visual fidelity" of reconstructed images. SAMSUNG-1007, 24; SAMSUNG-1003, ¶[125].

To achieve these goals, Saito discloses a "polyharmonic local sine transform" (PHLST) and a "polyharmonic local cosine transform" (PHLCT) that both solve Poisson's equation and are "effective for image approximation." SAMSUNG-1007, 6, 27; SAMSUNG-1003, ¶[126]. Saito explains that "PHLST can represent smooth regions of an image very efficiently" and therefore "image approximation and compression are immediate and important applications of PHLST." SAMSUNG-1007, 8-9. Saito further discloses "extensions and applications of PHLST" which include a version called "polyharmonic local cosine transform (PHLCT)." SAMSUNG-1005, 27. The PHLCT technique can "solve the ... Poisson equation with the Neumann boundary condition." *Id*. The PHLCT utilizes "the first order normal derivative of data at the boundary." *Id*. In particular, the solution to Poisson's equation has "the same normal derivative at the boundary with the original function" by ensuring that "the residual function v_j ... clearly satisfies $\partial v_j/\partial \upsilon = 0$ on $\partial\Omega_j$." SAMSUNG-1007, 27. Thus, Saito's PHLCT technique ensures that the derivative of the estimated signal at a boundary of a block is equal to the derivative of the signal to be estimated at the boundary, ensuring smoothness of the estimated image across block boundaries with less "blocking artifacts." SAMSUNG-1003, ¶[126]; SAMSUNG-1007, 27; *see also* 5, 58, Abstract, FIG 11.

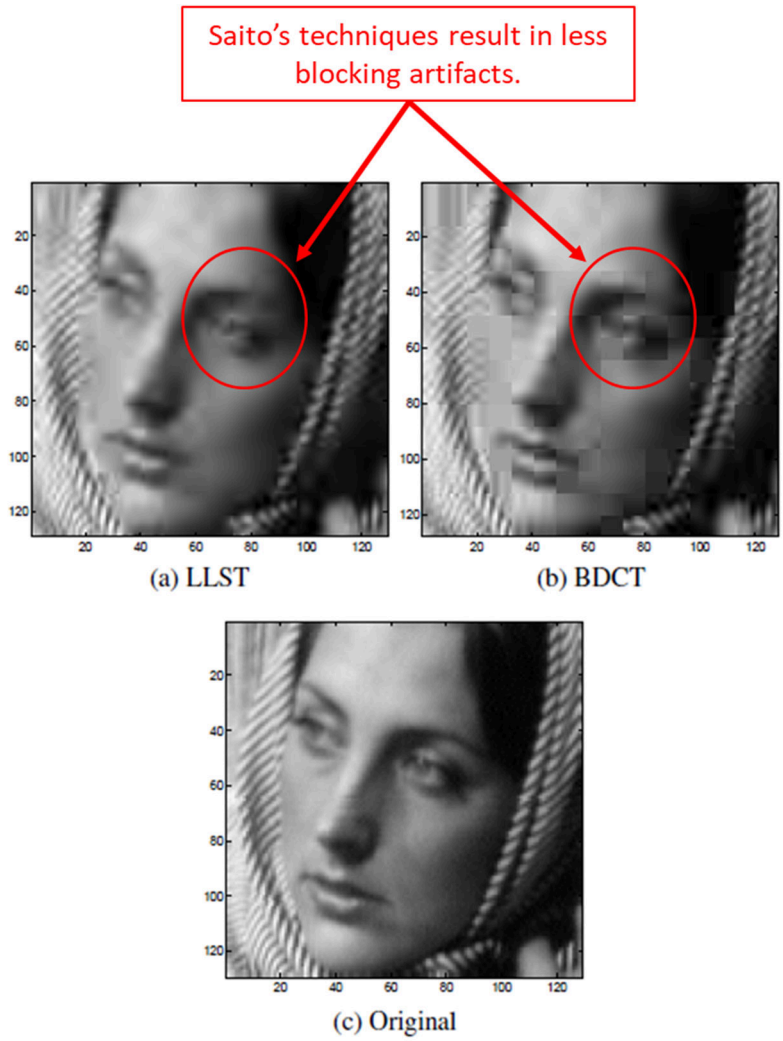

SAMSUNG-1007, FIG. 11 (Cropped and annotated).

5. Combination of Mualla-Shirani and Saito (and the Combination of Mualla-Stockhammer-Shirani and Saito in Ground 1B)

As discussed above, the combination of Mualla and Shirani (and the combination of Mualla-Stockhammer and Shirani in Ground 1B) implements a two-stage (hybrid) error concealment technique. The second stage applies "spatial error-concealment" to "restore the missing blocks using the information in the current

frame." SAMSUNG-1006, 1; *see also* SAMSUNG-1005, 242. Both Mualla and Shirani disclose that "**spatial**" concealment can be implemented using various techniques from the field of **conventional image-processing**, each with benefits and tradeoffs. SAMSUNG-1005, 242-243; SAMSUNG-1006, 1; SAMSUNG-1003, ¶[132]. Indeed, as confirmed by Dr. Reader, it was well-known to use image-processing techniques to perform spatial concealment within an individual frame of a video. SAMSUNG-1003, ¶[133] (citing Wexler, SAMSUNG-1011, as disclosing a hybrid-type "space-time video completion" techniques for "[c]orrection of missing/corrupted video frames" in which "classical spatial image completion and synthesis" is implemented for "spatial" correction within an individual video frame).

Furthermore, a POSITA would have understood or found obvious that image processing can be performed by techniques that **solve Poisson's equation**. SAMSUNG-1003, ¶[134]. As Dr. Reader explains, numerous research papers and patents had, several years before the Critical Date, described techniques for image editing and image reconstruction that involved solving Poisson's equation. SAMSUNG-1003, ¶[134] (citing Perez, SAMSUNG-1010, Raskar, SAMSUNG-1012, Sun/Sun-128, SAMSUNG-1013 and SAMSUNG-1014, and Fattal, SAMSUNG-1015).

As Dr. Reader explains, a POSITA would have understood or found obvious

that image processing techniques involving Poisson's equation are particularly effective in addressing the same challenges and achieving the same goals emphasized by Mualla and Shirani for error concealment applications. SAMSUNG-1003, ¶[135]. For example, as Dr. Reader explains, Mualla repeatedly emphasizes a fundamental importance of considering the "human visual system (HVS)" in viewing the "subject quality" of video codec techniques, and in particular for error concealment. SAMSUNG-1005, 33, 36, 40, 52, 55, 59, 242, 251, 265, 268, Figures 10.8 and 10.10; SAMSUNG-1003, ¶[135]. Like Mualla, Shirani also stresses the fundamental importance of considering the "limitations of the **human visual system**" when designing an error concealment technique." SAMSUNG-1006, 1, 4; SAMSUNG-1003, ¶[135].

In view of Mualla and Shirani emphasizing a fundamental challenge and goal of improving the "subjective quality" of error concealment for the "human visual system," a POSITA would have understood that an image approximation technique based on **solving Poisson's equation** is an effective way to achieve this goal. SAMSUNG-1003, ¶[136]. As Dr. Reader explains, "the Poisson equation has been used extensively in field of image processing and computer vision due to the specific benefits it provides for improving the perceptual quality of reconstructing images." SAMSUNG-1003, ¶[136] (citing Perez, SAMSUNG-1010).

Therefore, as discussed above: (i) Mualla and Shirani both recognize that

image processing techniques can be utilized to implement **second-stage spatial** error concealment in the Mualla-Shirani two-stage hybrid error concealment technique for video frames, (ii) image processing techniques that involve **solving Poisson's equation** were well-known to provide specific benefits for improving the perceptual quality of reconstructed images for the human visual system, thus addressing a fundamental objective of Mualla and Shirani's error concealment. SAMSUNG-1003, ¶[137]. As such, a POSITA would have understood or found obvious that image-processing techniques based on solving Poisson's equation would have been naturally applicable for implementing the second-stage "spatial" concealment of the Mualla-Shirani two-stage hybrid error concealment algorithm for video frames. SAMSUNG-1003, ¶[137]. As Dr. Reader further explains, literature in video coding spatial error concealment and literature in image processing by solving Poisson's equation both cited to similar techniques. SAMSUNG-1003, ¶[137].

Saito provides details of implementing solutions to Poisson's equation for image approximation. SAMSUNG-1003, ¶[138]. A POSITA would have also understood or found obvious that Saito, which was published in 2006 (over 4 years after Mualla and Shirani), was a natural advancement of applying Poisson's equation to improve the visual quality of image approximation and represented a state-of-the-art solution at the time of the Critical Date. SAMSUNG-1003, ¶[138]. Like

Mualla and Shirani, Saito expresses an overarching goal of improving "the perceptual quality of these approximations" and a desire for a "perceptually correct metric" that can improve the "visual quality" of approximated images. SAMSUNG-1007, 18; SAMSUNG-1003, ¶[138]. Saito also discusses the relevance of "psychophysical experiments" in selecting appropriate image approximation techniques that improve "visual fidelity" of reconstructed images. SAMSUNG-1007, 24; SAMSUNG-1003, ¶[138].

As discussed above, Saito discloses a "polyharmonic local sine transform" (PHLST) and a "polyharmonic local cosine transform" (PHLCT) that solve Poisson's equation and are "effective for image approximation." SAMSUNG-1007, 6, 27; SAMSUNG-1003, ¶[139]. In particular, Saito explains that its PHLCT technique "shall solve the [] Poisson equation with the Neumann boundary condition." SAMSUNG-1007, 27; SAMSUNG-1003, ¶[139].

Furthermore, as discussed above, a POSITA would have recognized or found obvious that Mualla, Shirani, and Saito all strive to achieve similar goals in spatial image approximation, and accordingly a POSITA would have had a reasonable expectation of success in combining Saito's techniques into Mualla-Shirani. As Dr. Reader explains, both Shirani and Saito strive to improve reconstruction of high-frequency edges and discontinuities in an image. SAMSUNG-1003, ¶[140] (citing SAMSUNG-1006, 5 and 7, and SAMSUNG-1007, 1, 2, and 4).

As discussed above, Saito's PHLCT technique ensures that the derivative of the estimated signal at a boundary of a block is equal to the derivative of the signal to be estimated at the boundary. SAMSUNG-1007, 27; *see also* 5, Abstract; *see supra* §III.4. A POSITA would have understood or found obvious that this is consistent with Shirani's "second stage" technique generating a "refined initial estimate" that has border pixel values with a "border error" that is equal to the "border error" of the "initial estimate" that was generated in Shirani's "first stage." SAMSUNG-1006, 1, 3; SAMSUNG-1007, 27; *see also* 5, Abstract; SAMSUNG-1003, ¶[141]. As Dr. Reader explains, Shirani's "border error" is equivalent to Saito's "derivative at the boundary" (which is equivalent to the '025 patent's "gradient" value at a boundary). SAMSUNG-1003, ¶[141]. Furthermore, a POSITA would have understood or found obvious that because Saito's PHLCT technique can achieve a faster "decay rate" for the error signal at the boundaries of blocks, this is consistent with Shirani's goal of "improv[ing] the video reconstruction quality" by ensuring that "image continuity inside the block and across its boundaries is preserved." SAMSUNG-1007, 27; SAMSUNG-1006, Abstract, 3.

As explained below in more detail, combining Mualla-Shirani and Saito would have been obvious at least because such a combination would have merely involved (1) combining prior art elements according to known methods to yield predictable results; and the (2) use of known techniques to improve similar devices

in the same way. *See KSR Int'l Co. v. Teleflex Inc.,* 550 U.S. 398, 415-421, 82 USPQ2d 1385, 1395-97 (2007)*; MPEP 2143*; SAMSUNG-1003, ¶[142].

In the resulting combination of Mualla, Shirani, and Saito, if no errors are detected in a frame of video, then conventional motion compensation is applied to the frame "to provide a prediction of the current frame," as taught by Mualla and Shirani. SAMSUNG-1005, 27, Figure 1.1, 115-116; SAMSUNG-1006, Abstract 2-3. Otherwise, if an error is detected in one or more blocks of a frame, then a motion-compensated two-stage hybrid error concealment technique is applied to the frame. The "first stage" applies Shirani's "temporal" concealment to find a block X_i in the previous frame with border pixels that have the smallest sum of "border errors" relative to surrounding blocks, as taught by Shirani. SAMSUNG-1005, 242-245; SAMSUNG-1006, 1-3; SAMSUNG-1003, ¶[143]. The resulting block X_i is an "initial estimate" of the erroneous/missing block.

Then, the "second stage" refines the "initial estimate" X_i by applying "spatial" concealment in which "the information around each missing block" is utilized to estimate pixels values in the interior of the estimated block X_i. SAMSUNG-1005, 242-245; SAMSUNG-1006, 1-3; SAMSUNG-1003, ¶[144]. Here, the second-stage spatial concealment of Mualla-Shirani is modified to implement Saito's PHLCT to interpolate the interior pixels of the Mualla-Shirani initial estimate X_i.

SAMSUNG-1003, ¶[144]. The second-stage spatial concealment obtains a solution to Poisson's equation with Neumann boundary conditions equal to the normal derivatives at boundaries of the missing block (as taught by Saito). SAMSUNG-1003, ¶[144]. These normal derivatives at the boundaries are based on Shirani's "border errors" obtained in Shirani's first stage. SAMSUNG-1003, ¶[144]. As a result, the Mualla-Shirani-Saito combination uses a Poisson-equation-solving image approximation technique (e.g., PHLCT as taught in Saito) to implement spatial error concealment in the second stage of the Mualla-Shirani two-stage hybrid error concealment technique, thereby generating a refinement of the "initial estimate" that was obtained in Shirani's first stage. SAMSUNG-1003, ¶[144]. The result is an estimated frame in which erroneous/missing blocks have been concealed. SAMSUNG-1003, ¶[144]. As Dr. Reader explains, a POSITA would have recognized and found obvious that Saito's image approximation techniques based on solving Poisson's equation would have enhanced Shirani's "second stage" techniques, "improv[ing] the video reconstruction quality" in order to achieve similar goals of image approximation. SAMSUNG-1007, 27; SAMSUNG-1006, Abstract, 3; SAMSUNG-1003, ¶[144].

Furthermore, as discussed above, the modified two-stage hybrid error concealment of the Mualla-Shirani-Saito combination is implemented in both the

encoder and the decoder, as taught by Mualla. SAMSUNG-1005, 246-250; SAMSUNG-1003, ¶[145].

6. Analysis

As an initial matter, the ’025 Patent includes claims that recite both encoding and decoding operations (despite the claim being directed to an “encoding” or “decoding” apparatus by the preamble). *See, e.g.*, SAMSUNG-1006, Claim 6. To indicate which limitations include predominately encoding or decoding steps, Petitioner has added the annotations of COD (“encoding”) and DEC (“decoding”) to the title of each claim limitation. This annotation is solely an aide to the reader and should not be viewed as an argument that a limitation discloses only one operation or the other. SAMSUNG-1003, ¶[147].

“Moving picture decoding” claims 6-8, 10

[6.pre]

Mualla teaches extensive details of an H.263-based video codec system, which implements a ***decoding apparatus*** for decoding ***moving pictures*** (e.g., “video”). SAMSUNG-1005, 23-26, 31, 36, 51-52, 227-228, 241-242, 265. For example, in describing “Transform Coding” which “forms the basis of almost all video coding standards,” Mualla describes a ***decoder*** implemented in a “transform coding system.” SAMSUNG-1005, 51 (last paragraph), Figure 2.9 (reproduced below). As another example, in describing techniques for “error resilience” in

video coding systems, Mualla discloses a ***decoder*** implemented in a "typical video communication system." SAMSUNG-1005, 227-228, Figure 9.1; SAMSUNG-1003, ¶[148].

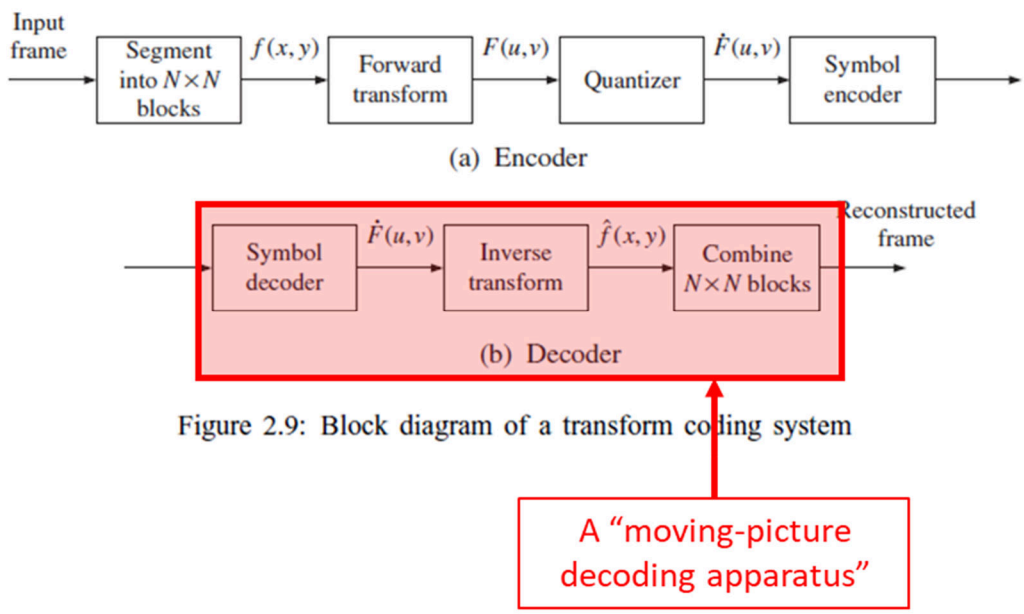

SAMSUNG-1005, FIG. 2.9 (annotated and color added)

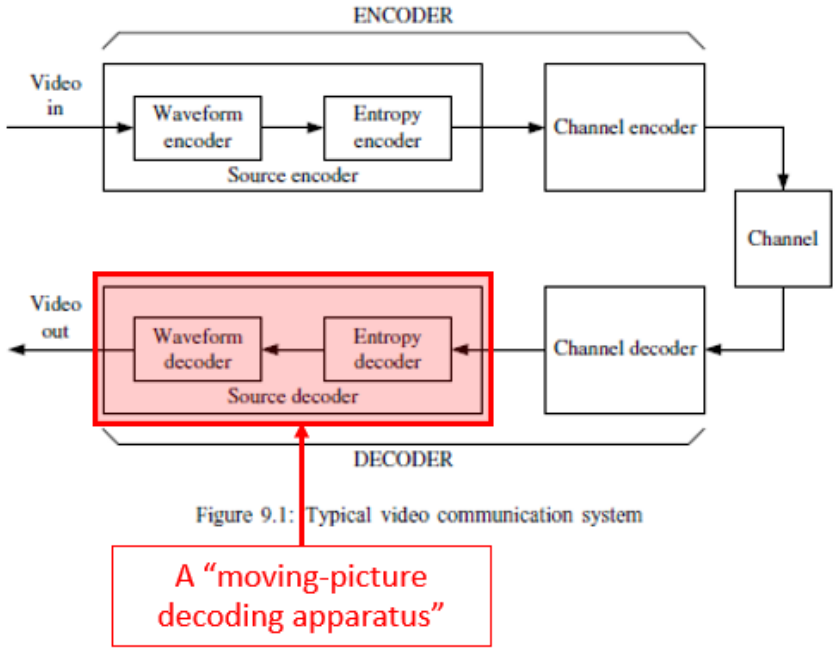

SAMSUNG-1005, FIG. 9.1 (annotated and color added)

Shirani similarly discloses using the H.263-based video codec system and its associated ***decoding apparatus***. SAMSUNG-1006, 2-4 ("[w]hen channel errors occur, **the decoder** usually discards the erroneous data"), 4 ("H.263"); SAMSUNG-1003, ¶[149].

[6.1.DEC]

Shirani discloses that "[c]oded video information [("***coded data from an input signal***")] is first grouped into packets" and the "video packets are … multiplexed with audio information" using an "H.223 multiplexing" protocol. SAMSUNG-1006, 5. As Dr. Reader explains, multiplexing video packets at an encoder would have required a means for "***demultipex[ing]***" the video packets at the decoder, for example, by using a ***demultiplexer***. SAMSUNG-1003, ¶[150]. Indeed, the H.263 standard (the standard used by Mualla and Shirani) corroborates the use of demultiplexers in H.263 codecs for "***demultiplex[ing] coded data from an input signal***." SAMSUNG-1016, 2.

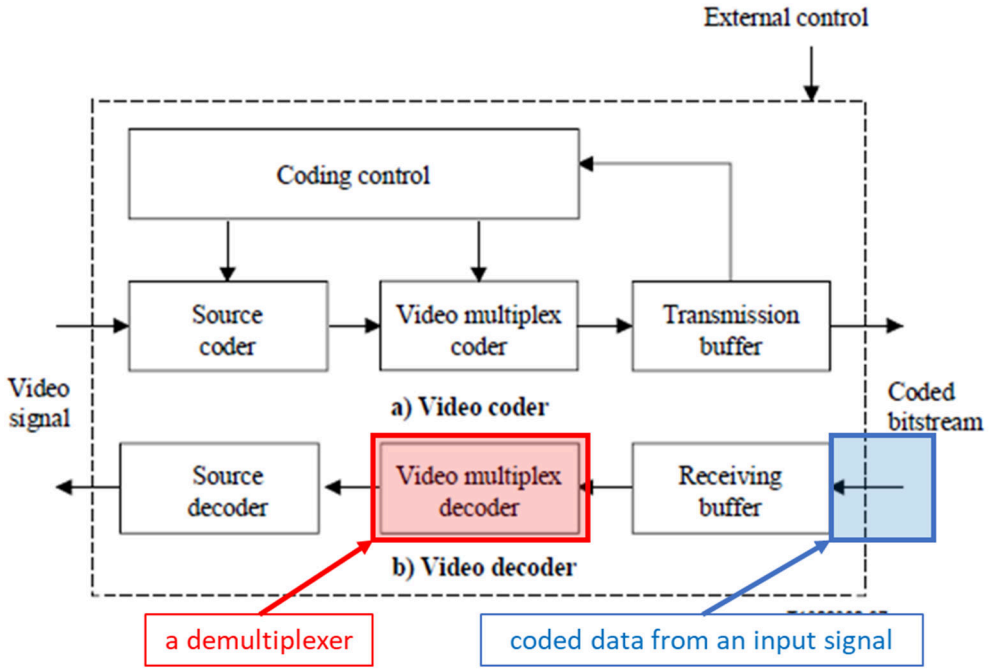

Figure 1/H.263 – Outline block diagram of the video codec

SAMSUNG-1016, FIG. 1 (annotated and color added).

Additionally, Girod – a H.263 codec reference cited by Mualla as reference 201 – discloses that information is "multiplexed to the video bitstream." SAMSUNG-1008, 2, FIG. 1(b); SAMSUNG-1003, ¶[151]. FIG. 1(b) illustrates an example decoder with a "***demultiplexer***."

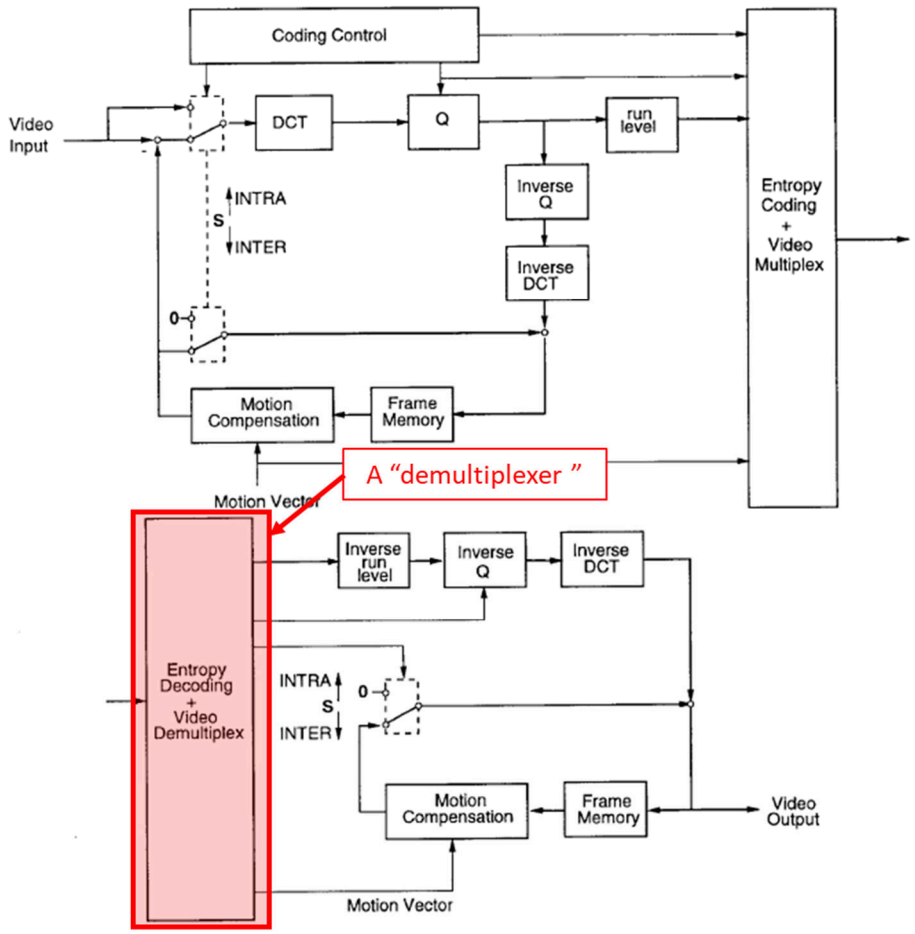

SAMSUNG-1008, FIG. 1(a) ("encoder") and 1(b) ("decoder") (annotated and color added).

Furthermore, Mualla and Shirani both disclose the H.263 ***specific syntax structure***. SAMSUNG-1005, 93, 232; SAMSUNG-1006, 2, 4-5. Indeed, Mualla refers to the H.263 codec standard as "the ***syntax*** of H.263." SAMSUNG-1005, 93. Mualla and Shirani also both use the specific syntax structure of the H.263 codec standard as a gauge for detecting errors in a video bitstream. SAMSUNG-1005, 231-232; SAMSUNG-1006, 2. For example, Mualla's process of "error cor-

rection" uses "***syntax*** … violations" to detect errors in a video bitstream. SAMSUNG-1005, 231-232. Shirani discloses a similar process where a decoder determines the "location of missing blocks" by "detecting … semantic or ***syntactic*** violations." SAMSUNG-1006, 2; SAMSUNG-1003, ¶[152].

[6.2.COD]

As described above in 6.1.DEC, Shirani discloses ***multiplexing a coded bitstream***, and a POSITA would have understood or found obvious that the H.263 codec standard, as used in Mualla and Shirani, included ***multiplexing*** operations. SAMSUNG-1006, 5; SAMSUNG-1003, ¶[153]; *see supra*, [6.1.DEC]. Indeed, the H.263 standard discloses multiplexing and demultiplexing a "***coded bitstream***." SAMSUNG-1016, 2, 9; SAMSUNG-1003, ¶[153].

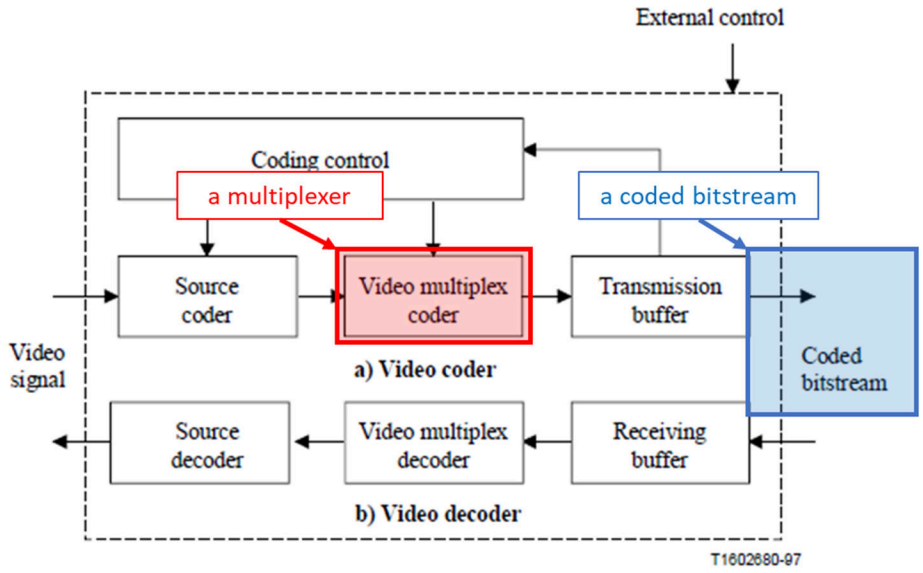

Figure 1/H.263 – Outline block diagram of the video codec

SAMSUNG-1016, FIG. 1 (annotated and color added).

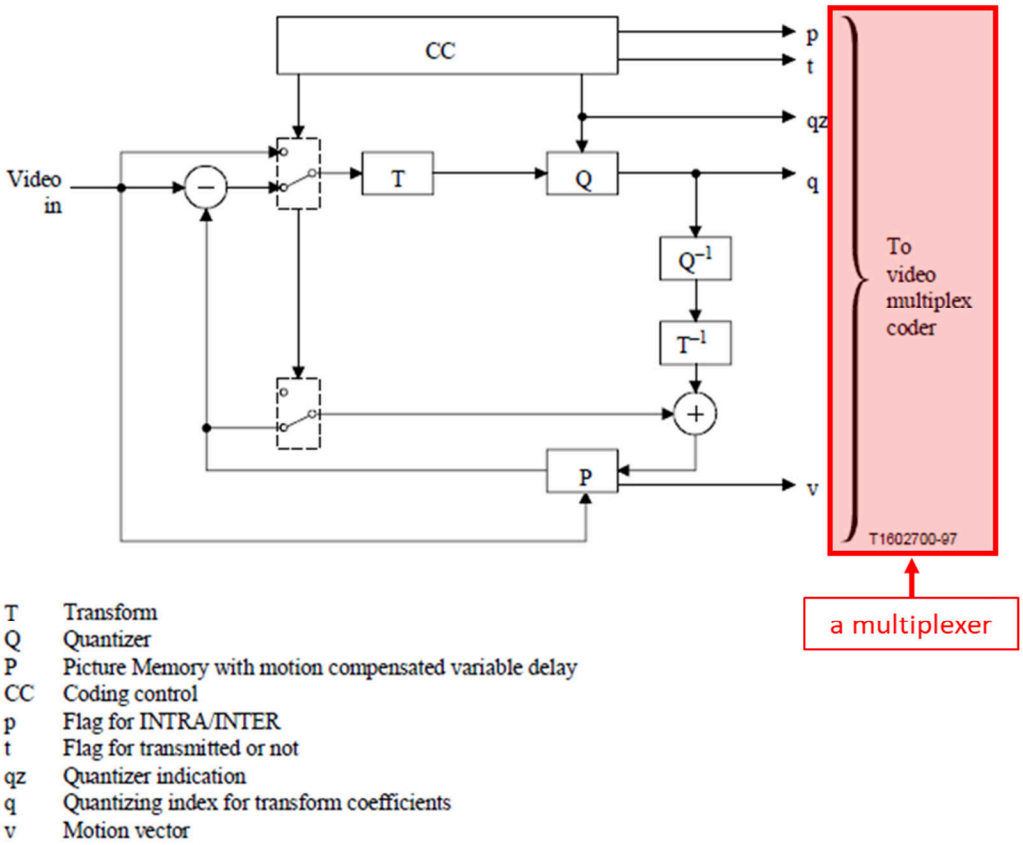

Figure 3/H.263 – Source coder

SAMSUNG-1016, FIG. 3 (annotated and color added).

Furthermore, as shown in Mualla's Figure 3.1 and explained in further detail below, a POSITA would have understood or found obvious, based on the teachings of Mualla, that the coded bitstream is obtained by encoding motion vectors (which include the claimed "***border motion-vector data***") and a quantization index (the claimed "***post-quantization data***"), along with various coding control information. SAMSUNG-1005, Figure 3.1, 71-75; SAMSUNG-1003, ¶[154].

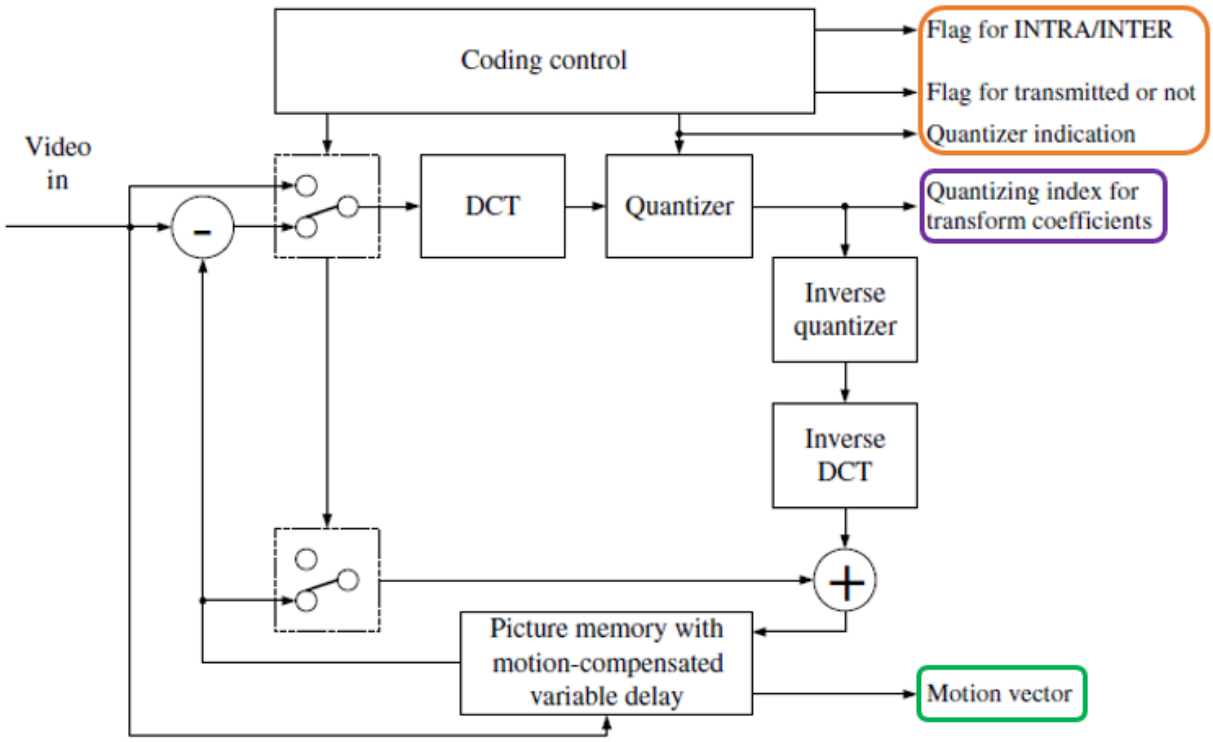

Figure 3.1: H.263 video encoder

...obtained by predictive coding

Mualla describes numerous operations at the encoder that perform predictive coding. SAMSUNG-1003, ¶[155]. For example, Mualla discloses a "video codec" that includes a "motion estimation (ME) block … to estimate the movement that occurred between the current frame and a reference frame." SAMSUNG-1005, 26-27, 115-117, FIG. 1.1. Mualla refers to this estimation as "motion information." *Id*. Motion information is then "utilized by the motion compensation (MC) block to move the contents of the reference frame to provide a prediction of the current frame" ("***predictive coding***") which Mualla also refers to as the "motion-compensated prediction (MCP)." *Id*. Mualla refers to "motion compensated prediction" as

a type of "predictive coding" in which regions of an input frame are predictively coded "with respect to the corresponding regions in the reference frame." SAMSUNG-1005, 61; SAMSUNG-1003, ¶[155]. Mualla's "typical video codec" illustrates these components.

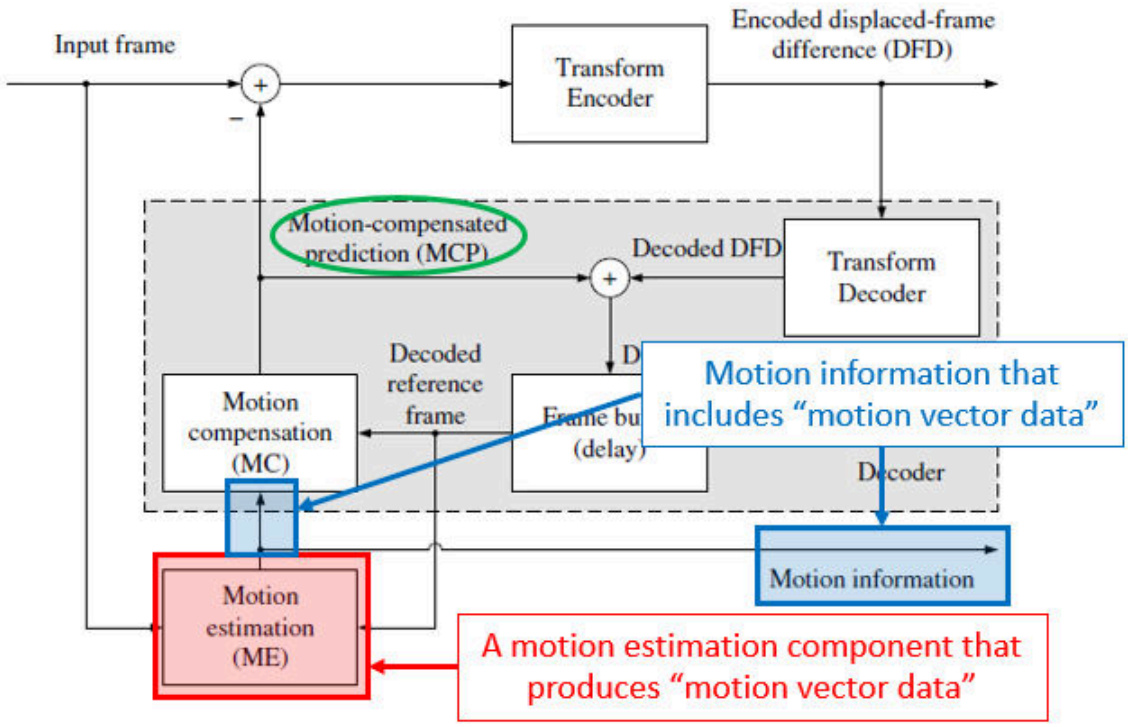

Figure 1.1: Typical video codec

SAMSUNG-1005, FIG. 1.1 (annotated and color added).

As another example of predictive coding, Mualla discloses that the "motion information" (motion vector) itself is predictively coded. Mualla discloses that the "motion of the [a] current block" (e.g., the motion information) is "represented by a motion vector" ("***motion-vector data***") which is the "displacement between the block and its best-match block in the reference frame." SAMSUNG-1005, 62,

FIG. 2.16; SAMSUNG-1003, ¶[156].

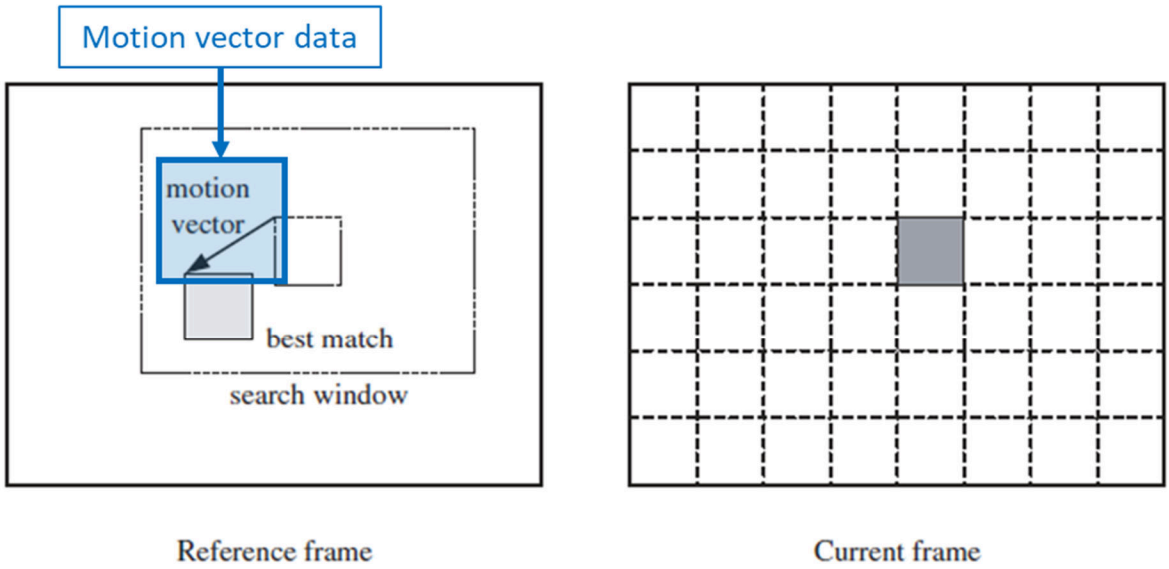

Figure 2.16: Block-matching motion estimation

SAMSUNG-1005, FIG. 2.16 (annotated and color added).

Mualla discloses that the "estimated motion vector" is "predictively coded" (part of "***a coded bitstream obtained by predictive coding***"), meaning that the "<u>motion vector difference MVD</u> = MV – MVP is encoded instead of the motion vector itself." SAMSUNG-1005, 74, *see also* 115-117.

<u>border</u> *<u>motion-vector data</u>*

As an initial matter, the '025 patent describes "***border motion-vector data***" as "data on a motion vector from a border of the rectangular zone in the picture to be coded to the border of the reference picture thus found." SAMSUNG-1001, 2:59-61; *see infra*, [6.6.COD]; SAMSUNG-1003, ¶[158].

As discussed above, the Mualla-Shirani-Saito combination implements a

two-stage hybrid error concealment in the **encoder** (as well as the decoder), as taught by Mualla. SAMSUNG-1005, 246-250. The encoder implements the first stage of Shirani's two-stage error concealment technique to the motion of a missing/erroneous macroblock by performing temporal concealment. *See supra*, §§III.A.3, A.5. In the combination, Shirani's first stage uses motion vectors of neighboring blocks to obtain estimates of pixels at the borders of a missing block. *See supra*, §§III.A.3, A.5; SAMSUNG-1006, 2-3. In particular, the first stage of Shirani estimates motion vectors of subblocks adjacent to the missing block, and in doing so, utilizes "candidate motion vectors" ("data on a motion vector") which can include motion vectors of "neighboring blocks." *See supra*, §§III.A.2, A3, A.5; SAMSUNG-1006, 2-3; SAMSUNG-1003, ¶[159]. These motion vectors of neighboring blocks are used to obtain an estimate of pixels at each border of the missing block ("from a border of the rectangular zone in the picture to be coded"), by minimizing the "squared sums of border errors" (in total, "***border motion-vector data***" or, "data on a motion vector from a border of the rectangular zone in the picture to be coded to the border of the reference picture thus found"). *Id*.

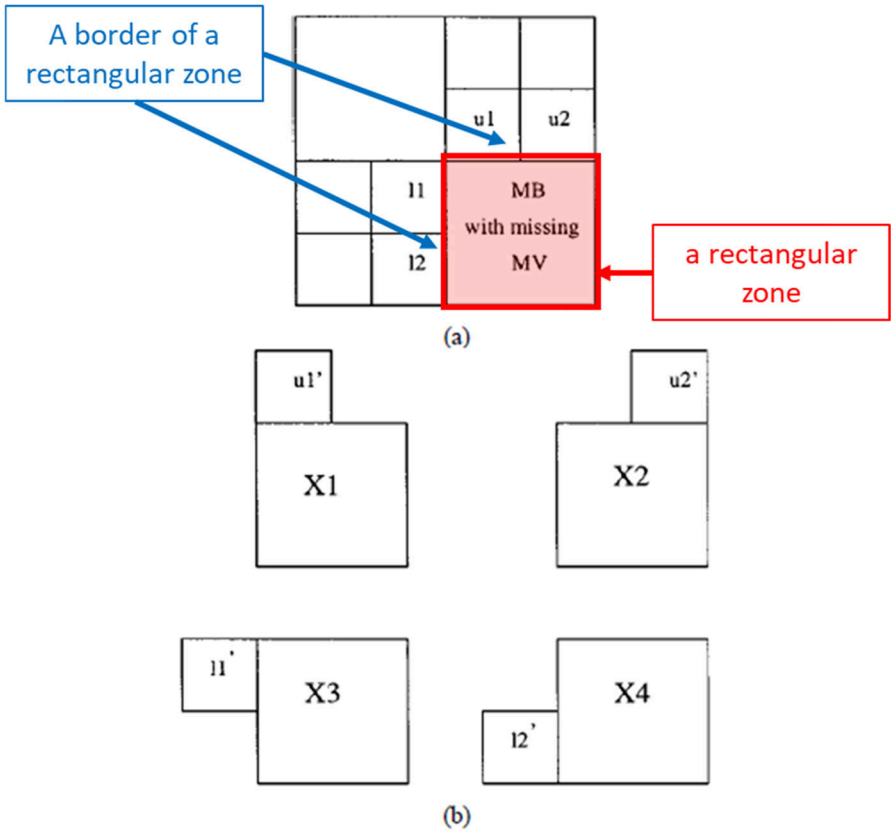

Fig. 1. (a) The four subblocks, (b) their corresponding subblocks in the previous frame, and the blocks connected to them.

SAMSUNG-1005, FIG. 1(a) (annotated and color added).

After Shirani's **first stage** estimates pixels at the **borders** of the missing block, the **second stage** of the Mualla-Shirani-Saito combination estimates pixels in the **interior** of the missing block using Saito's technique for solving Poisson's equation with the border pixels (specifically, Shirani's "border errors" of the missing block) providing boundary conditions in Saito's techniques. *See supra*, §III.A.5; *see infra* [6.7.COD]; SAMSUNG-1003, ¶[160]. Therefore, because Shirani's first stage temporal concealment uses the motion vectors of neighboring

blocks to estimate only the motion of pixels at the border of the missing block, Shirani discloses the claimed "***border motion vector data***."

post-quantization data obtained by quantization in the predictive coding

Mualla discloses that "quantization is a key element of a video coding system" and illustrates a "quantizer" in its example "video encoder" and "transform coding system." SAMSUNG-1005, 40-42, 52, FIGS. 2.3, 2.9, 3.1. Mualla discloses that, in "transform coding" (also known as "DCT coding"), "coefficients can be quantized according to their visual importance" ("***post-quantization data***"). SAMSUNG-1005, 52, 75; SAMSUNG-1003, ¶[161].

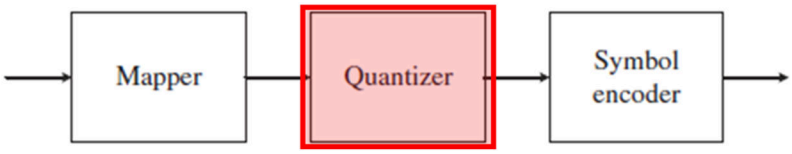

Figure 2.3: Elements of a video encoder

SAMSUNG-1005, FIG. 2.3 (annotated and color added).

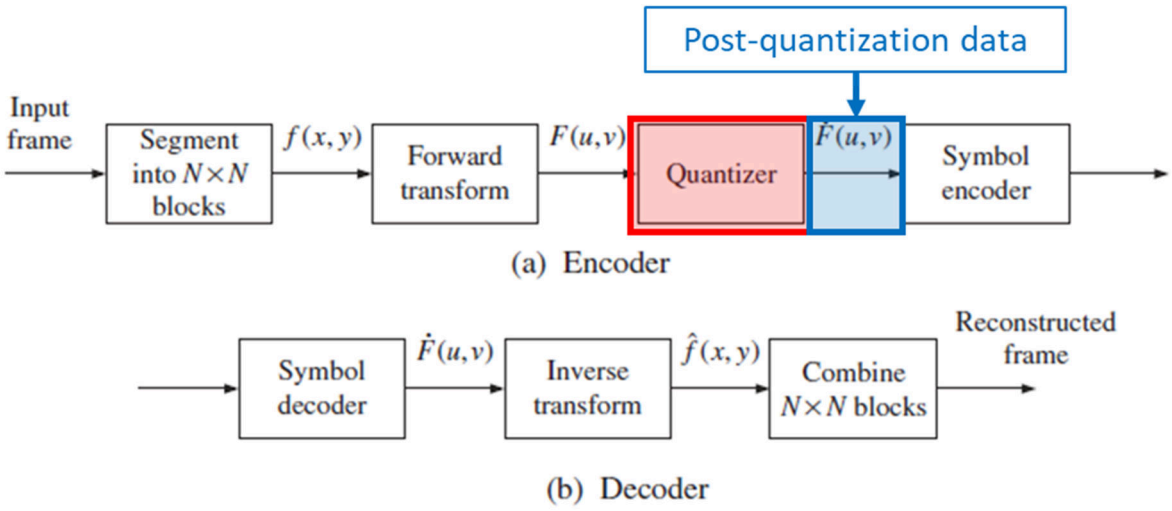

Figure 2.9: Block diagram of a transform coding system

SAMSUNG-1005, FIG. 2.9 (annotated and color added).

Mualla discloses that these coefficients are derived by obtaining a "displaced frame difference (DFD)" that represents "the coded prediction error signal" ("***the predictive coding***"). SAMSUNG-1005, 61, FIG. 2.15. The DFD signal can be coded "using any of the intraframe coding methods discussed in Section 2.6" and "the most commonly used method is transform coding, in particular block-based DCT transform coding." SAMSUNG-1005, 62. Mualla discloses that the DCT transform "is applied to the DFD values" and that this "results in … transform coefficients for each [macro block]." SAMSUNG-1005, 74. These coefficients are then "quantized using a uniform scalar quantizer" ("***post-quantization data obtained by quantization in the predictive coding***"). SAMSUNG-1005, 75, FIG. 3.1; SAMSUNG-1003, ¶[162]. This process is illustrated in Mualla's example

"H.263 video encoder."

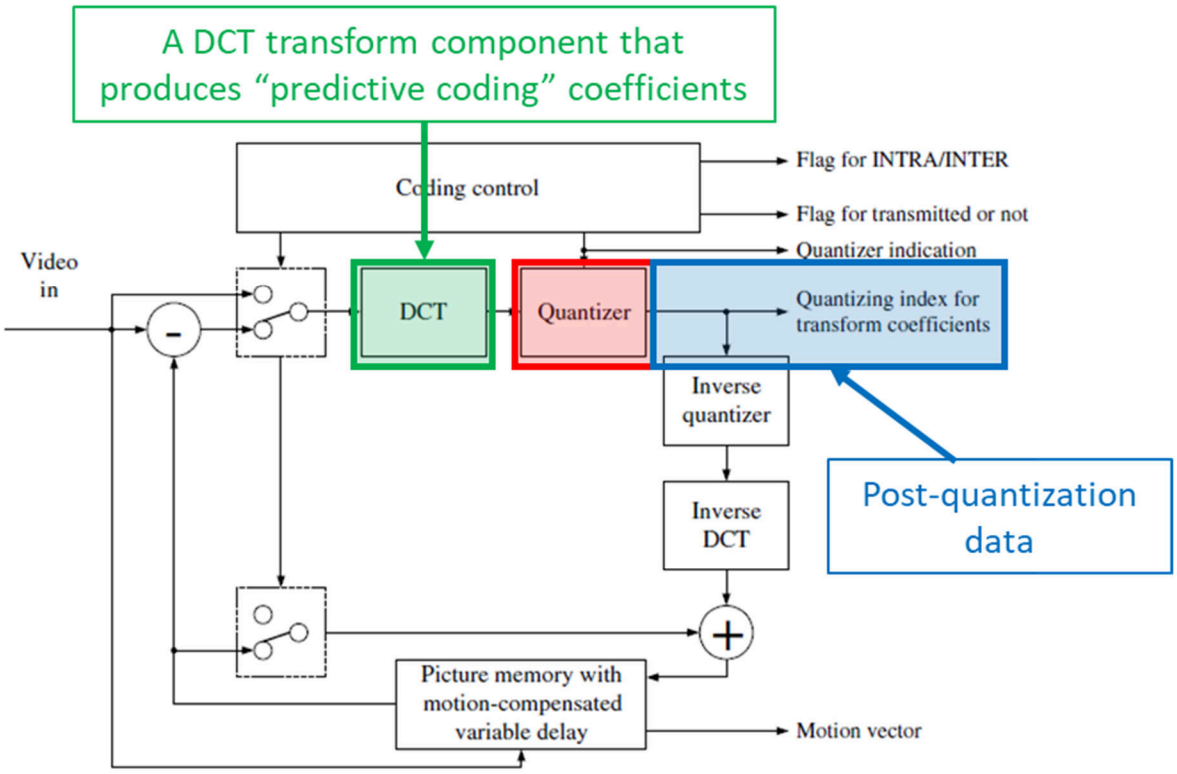

Figure 3.1: H.263 video encoder

SAMSUNG-1005, FIG. 3.1 (annotated and color added).

[6.3.COD]

As discussed above in [6.2.COD], Mualla's DFD represents "the coded prediction error signal" ("***residual picture that is a residual signal***") which is created by subtracting a "motion compensation prediction (MCP)," produced from the "reference frame" ("***a predictive picture produced from a reference picture that is a local decoded video signal***"), from the "current frame" ("***a picture to be coded that is an input moving-picture video signal to be subjected to coding***"). SAMSUNG-1005, 26-27, FIG. 1.1; SAMSUNG-1003, ¶[163]. Mualla's "typical video

codec" illustrates this process.

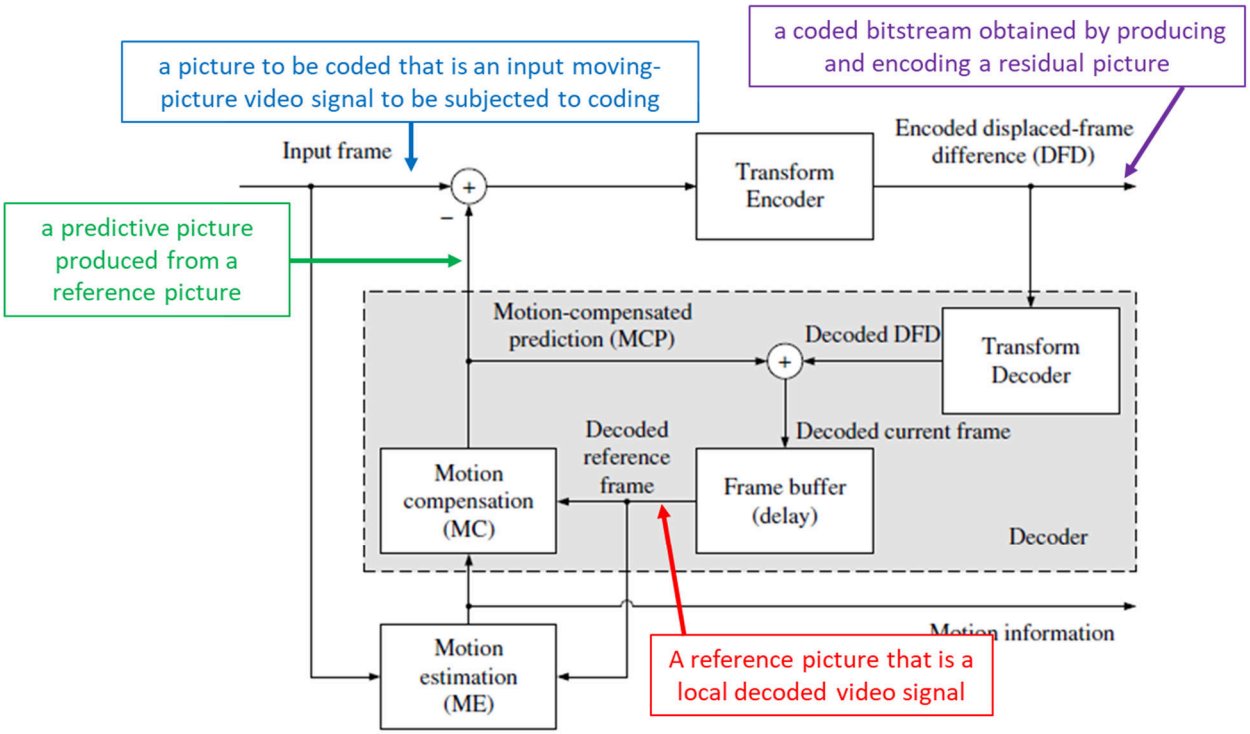

Figure 1.1: Typical video codec

SAMSUNG-1005, FIG. 1.1 (annotated).

Mualla also discloses that an input video signal "consists of a sequence of pictures (or frames)" where "[e]ach picture is divided into groups of blocks (GOBs)" and each GOB "is divided into macroblocks (MBs)" ("***each of a plurality of rectangular zones***"). SAMSUNG-1005, 71-72. These MBs are further divided into individual "pixels," or "pels" ("***each composed of a specific number of pixels, into which a video area of the moving-picture video signal is divided***"). SAMSUNG-1005, 36, 71-72, FIG. 3.2; SAMSUNG-1003, ¶[164]. FIG. 3.2 of Mualla illustrates this breakdown.

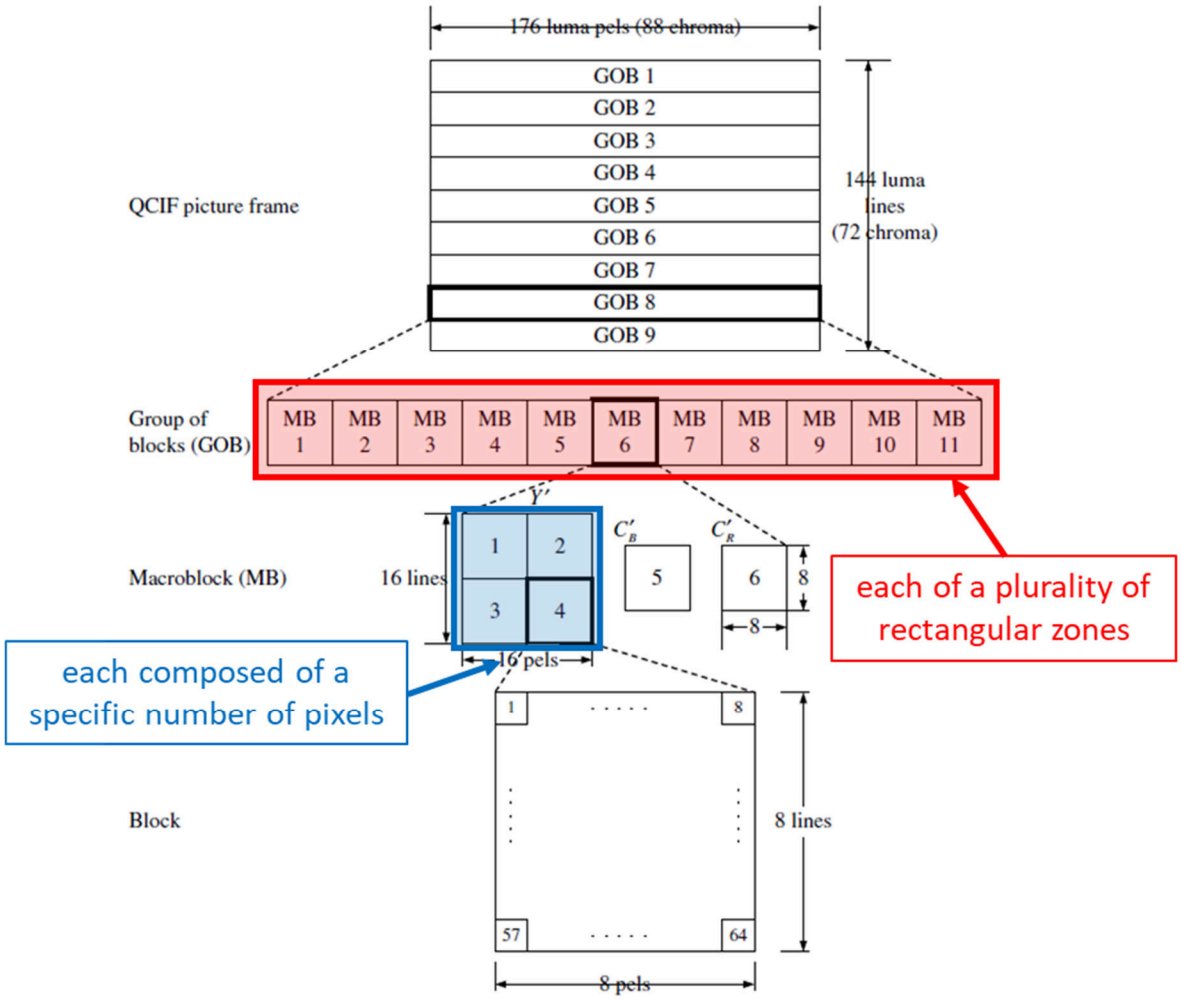

Figure 3.2: H.263 picture structure for a QCIF frame

SAMSUNG-1005, FIG. 3.2 (annotated and color added).

[6.4.COD]

As discussed above, the Mualla-Shirani-Saito combination implements a two-stage hybrid error concealment in the **encoder** (as well as the decoder) using "interactive techniques," as taught by Mualla. SAMSUNG-1005, 246-250; SAMSUNG-1003, ¶[165].

For the first stage, as discussed above in [6.2.COD], Mualla discloses

"boundary matching (BM)" to select a "suitable replacement [motion vector] from a set of candidate [neighboring] motion vectors. SAMSUNG-1005, 245; *see supra* [6.2.COD]. Shirani's first stage applies a similar technique to estimate a missing motion vector by considering "subblocks adjacent to the missing block." SAMSUNG-1006, 2-3, FIG. 1(a); *see supra* [6.2.COD]; SAMSUNG-1003, ¶[166].

In more detail, Shirani explains that in order to obtain an "initial estimate" for each of the missing blocks ("***the rectangular zones***"), "subblocks adjacent to the missing block, i.e., *u1, u2*, *l*1, and *l*2 in Fig. 1(a), are considered" ("***another plurality of rectangular zones adjacent to the rectangular zones***"). SAMSUNG-1006, 3, FIG. 1(a) (reproduced below); SAMSUNG-1003, ¶[167].

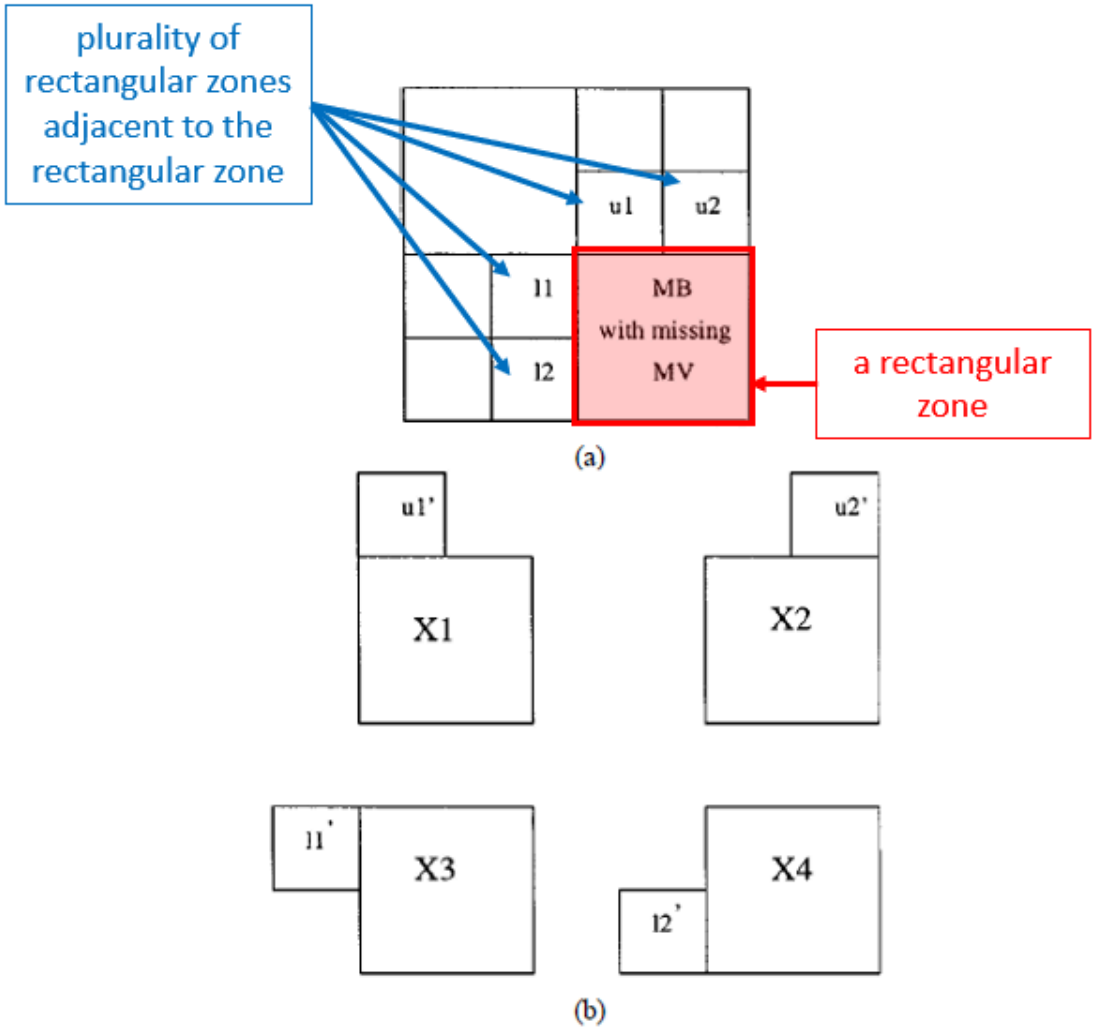

Fig. 1. (a) The four subblocks, (b) their corresponding subblocks in the previous frame, and the blocks connected to them.

SAMSUNG-1006, FIG. 1(a) (annotated and color added).

As explained in Section III.A.2, above, Shirani discloses that "for each of these subblocks [(*u1, u2*, *l*1, and *l*2)], a corresponding subblock in the previous frame is determined" (denoted *u*1', *u*2', *l*1', and *l*2' at the bottom of FIG. 1(a), above). SAMSUNG-1006, 3. Then, "four blocks, namely X1, X2, X3, and X4, which are connected to *u*1', *u*2', *l*1', and *l*2', and (respectively), are determined" and

"a block from the above four blocks [(X1, X2, X3, and X4)] that minimizes the squared sums of border errors, between the estimated block and its adjacent above and left blocks, is selected." SAMSUNG-1006, 3; SAMSUNG-1003, ¶[168]. Shirani achieves this by defining "border error[s]" in "terms of pixels," including an error for the "bottom line pixels of the block to the top of the missing block" and an error for the "right column pixels of the block to the left of the missing block" and applying the same technique to define border errors for pixels adjacent to "the subblocks ... to the right and below of the missing block" ("***obtaining a boundary condition of each of a plurality of borders between the rectangular zones and another plurality of rectangular zones adjacent to the rectangular zones***"). *Id*. Furthermore, although the above description focused on adjacent subblocks above and to the left of the missing block, Shirani also discloses that "the same method can be extended to include the subblocks of the blocks to the right and below of the missing block" ("... ***of each of a plurality of borders between the rectangular zones and another plurality of rectangular zones adjacent to the rectangular zones***"). *Id*.

FIG. 5 of Shirani illustrates an example of concealing errors for multiple damaged macroblocks (a "***plurality***" of "***rectangular zones***") in a frame. SAMSUNG-1006, FIG. 5; SAMSUNG-1003, ¶[169].

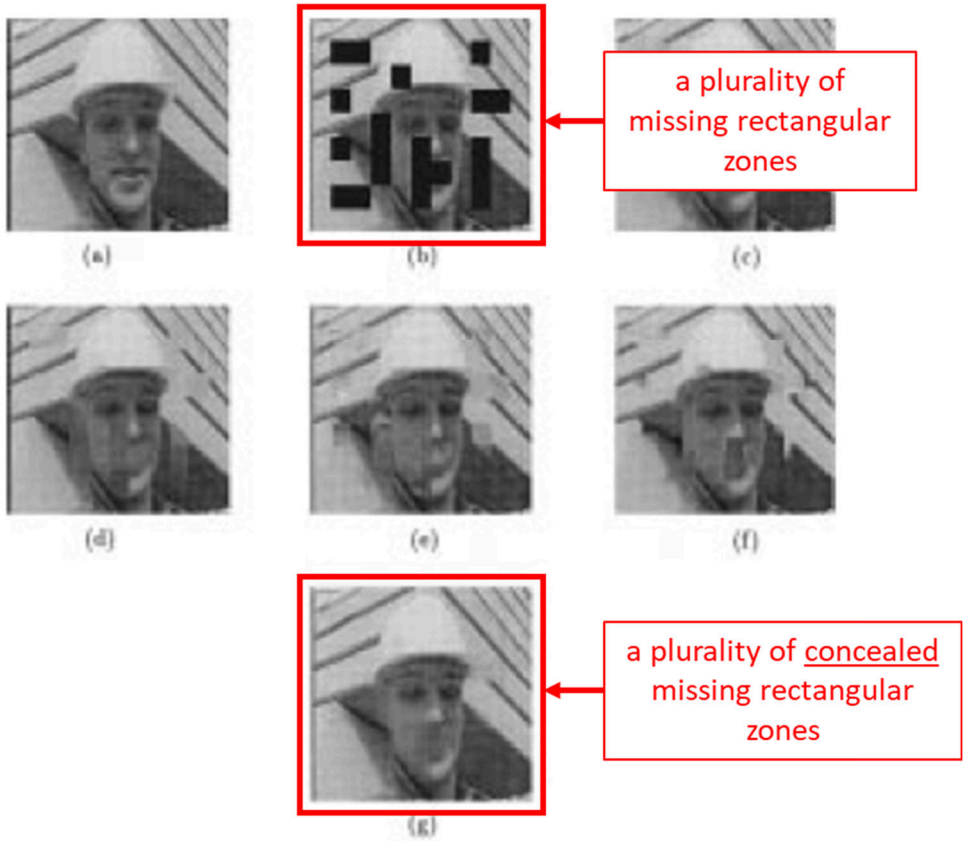

Fig. 5. A frame from the video sequence Foreman: (a) original; (b) missing blocks; reconstructed using (c) a nonadaptive GMRF model; (d) a suboptimal MRF model; (e) the method proposed in [4]; (f) the method proposed in [3]; and (g) our adaptive MRF model.

SAMSUNG-1006, FIG. 5 (annotated).

[6.5.COD]

As discussed above, the Mualla-Shirani-Saito combination implements a two-stage hybrid error concealment in the **encoder** (as well as the decoder) using "interactive techniques," as taught by Mualla. SAMSUNG-1005, 246-250; SAMSUNG-1003, ¶[170].

As described above in [6.4.COD], Shirani finds and evaluates the "border error" of a plurality of neighboring subblocks when considering the suitability of these subblocks for error concealment ("***finding a border, of the reference picture, having a boundary condition that matches the boundary condition***"). SAMSUNG-1006, 2-3, FIG. 1; *see supra* [6.2.COD], [6.4.COD]. Additionally, Shirani discloses that the "search for displacement of each of the subblocks is restricted to a set of candidate motion vectors," specifically, "the motion vectors of available neighboring blocks" ("***finding a border … by motion-vector search in the reference picture***"). SAMSUNG-1006, 3, FIG. 1(a); *see supra* [6.2.COD], [6.4.COD]; SAMSUNG-1003, ¶[171].

[6.6.COD]

As discussed above, the Mualla-Shirani-Saito combination implements a two-stage hybrid error concealment in the **encoder** (as well as the decoder) using "interactive techniques," as taught by Mualla. SAMSUNG-1005, 246-250; SAMSUNG-1003, ¶[172].

As described in [6.2.COD], [6.4.COD], and [6.5.COD] above, Shirani's first stage searches for candidate replacement motion vectors and generates border errors that define the similarity of the neighboring subblock's motion vector ("***border motion-vector data***"). *See supra*, [6.2.COD], [6.4.COD], [6.5.COD]; SAMSUNG-1003, ¶[173]. Indeed, Shirani's "candidate motion vectors" are "***data on a motion***

vector from a border of the rectangular zone in the picture to be coded to the border of the reference picture thus found," at least because these candidate motion vectors conceal missing motion vectors between "***the reference picture***" and "***the picture to be coded***." *Id*.

Moreover, as described above, Shirani generates border errors that quantify the similarity of the neighboring subblocks' motion vectors compared to the missing block to be concealed ("***defining a boundary condition of a border that corresponds to the border motion vector data, from the reference picture***"). *See supra*, [6.4.COD], [6.5.COD]; SAMSUNG-1003, ¶[174]. Shirani's border errors evaluate the similarity of the neighboring subblocks' motion vectors, so they are therefore "***based on the border motion vector data***" of the neighboring subblocks. *Id*.

[6.7.COD]

As discussed above, the Mualla-Shirani-Saito combination implements a two-stage hybrid error concealment in the **encoder** (as well as the decoder) using "interactive techniques," as taught by Mualla. SAMSUNG-1005, 246-250; SAMSUNG-1003, ¶[175].

In particular, as described above in [6.6.COD], Shirani's first stage generates ***border motion-vector data*** for each damaged or missing subblock. *See supra*, [6.2.COD], [6.4.COD]-[6.6.COD]. The second stage of the Mualla-Shirani-Saito

combination uses "the information around each missing block … to refine the initial estimate" (as taught by Shirani) by using Saito's technique for solving Poisson's equation with known boundary conditions. SAMSUNG-1006, 3; SAMSUNG-1007, 27; *see supra* §§III.A.2, III.A.4, III.A.5; SAMSUNG-1003, ¶[176].

As Dr. Reader explains, and as discussed above in the combination, a POSITA would have recognized and found obvious that Saito's image approximation techniques based on solving Poisson's equation would have enhanced Shirani's "second stage" techniques, "improv[ing] the video reconstruction quality" in order to achieve similar goals of image approximation. SAMSUNG-1007, 27; SAMSUNG-1006, Abstract, 3; SAMSUNG-1003, ¶[177]. Saito's Polyharmonic Local Cosine Transform (PHLCT) is an enhancement of a Polyharmonic Local Sine Transform (PHLST) technique for image approximation. SAMSUNG-1007, Abstract, 27. Saito discloses that the PHLST method "segments an image into local pieces using … characteristic functions, then decomposes each piece into two components: the polyharmonic component and the residual." SAMSUNG-1007, Abstract, 4. Saito explains that the polyharmonic component is "obtained by solving the elliptic boundary value problem associated with the so-called polyharmonic equation (e.g., Laplace's equation, biharmonic equation, etc.) given the boundary values (the pixel values along the boundary created by the characteristic function)." *Id*. The PHLCT variation of PHLST approximates an image between two

boundaries by "solv[ing] the … Poisson equation with the Neumann boundary condition" ("***generating an estimated video signal in each rectangular zone in the picture to be coded, that satisfies Poisson's Equation***[2]"). SAMSUNG-1007, 27; SAMSUNG-1003, ¶[177].

In implementing Saito's teachings into the Mualla-Shirani combination, a POSITA would have recognized and found obvious that the "border errors" of Shirani are suitable to use as the "Neumann boundary condition" for Saito's the PHLCT method, and that PHLCT would have been capable of approximating the image between these boundary conditions ("***thus producing the predictive picture***"). SAMSUNG-1007, 27 ("this method of course requires to estimate the **first order normal derivative** of data at the **boundary**"); SAMSUNG-1003, ¶[178].

As described in §III.A.5, above, Saito's techniques represent a natural improvement of image approximation techniques, at least because they can achieve a faster "decay rate" for the error signal at the boundaries of blocks – an improvement that is consistent with the goals of Mualla-Shirani. SAMSUNG-1007, 27; SAMSUNG-1006, Abstract, 3; SAMSUNG-1003, ¶[178].

Moreover, Saito's process of PHLCT is described by the '025 patent itself, and the '025 patent cites a subsequent publication by Dr. Naoki Saito that explains

[2] Petitioner reserves the right to advance §112 arguments against this claim feature in litigation.

the PHLCT method. SAMSUNG-1001, Cover, 11:34-12:25; SAMSUNG-1003, ¶[179].

[6.8.DEC]

As discussed above in [6.2.COD], Mualla-Shirani-Saito discloses "***border motion-vector data***" and "***post-quantization data***." *See supra*, [6.2.COD]. In particular, as discussed above, the first stage of Shirani's two-stage hybrid error concealment technique uses motion vectors of "neighboring blocks" ("***border motion-vector data***") to estimate motion vectors of subblocks adjacent to the missing block. SAMSUNG-1006, 3. Furthermore, as discussed in Section III.A.1, above, the motion vectors of these neighboring blocks ("***border motion-vector data***") are encoded and transmitted to the decoder. SAMSUNG-1005, 71, 74; SAMSUNG-1003, ¶[180]. Because the encoding and transmission of motion vector information is performed for all macroblocks in a frame/picture, Mualla teaches that the motion vectors of neighboring blocks ("***border motion-vector data***") around a missing block are encoded and transmitted to the decoder, and can be used by the decoder to perform temporal error concealment in Shirani's first-stage. SAMSUNG-1003, ¶[180].

Mualla-Shirani-Saito also discloses conventional "***motion vector data***." *See supra*, III.A.1; *see infra*, [6.14.DEC]. As discussed above, Mualla encodes and

transmits motion information for each macroblock in a frame, which includes motion information for the macroblock being decoded ("***motion vector data***") as well as motion information for neighboring blocks ("***border motion-vector data***") which can be used for error concealment in case the macroblock being decoded is received in error or corrupted. SAMSUNG-1005, 71, 74; SAMSUNG-1003, ¶[181].

In particular, a POSITA would have understood or found obvious that, in the system of Mualla-Shirani-Saito, motion information for a macroblock being decoded ("***motion vector data***") can be received and decoded, even if the macroblock is detected as having errors. SAMSUNG-1003, ¶[182]. For example, Mualla explains that a macroblock is detected as having an "error" if the "**decoded motion vector** points outside the permissible range." SAMSUNG-1005, 232; 244 (explaining that "the motion vector of a damaged block is usually lost or **erroneously received**" and disclosing techniques for recovering a "damaged motion vector"); *see also* Girod, 4 ("Transmission errors can be detected in a variety of ways ... **detect** that the **decoded motion vectors**, DCT coefficients, or quantizer step sizes **exceed their permissible range** (semantic violations)"). In view of these teachings, even if a macroblock is detected as having errors, and even if a particular example disclosed in Mualla or Shirani refers to motion vectors as "missing," "lost," or "not available," a POSITA would have understood or

found obvious that the techniques of Mualla and Shirani are applicable to motion vectors ("***motion vector data***") that are **received** and detected as having errors. SAMSUNG-1003, ¶[182].

As discussed in [6.1.DEC], above, Mualla-Shirani-Saito includes a multiplexer that "demultiplex[es]" received data. In addition, Mualla-Shirani-Saito implements an entropy decoder to perform entropy decoding on the demultiplexed data. *See supra*, [6.1.DEC]. In particular, Mualla also discloses an "***entropy decoder***" in a "[t]ypical video communication system" that "obtain[s] the output video" ("***generate … motion-vector data, the post-quantization data, the border motion-vector data and parameter data required for constructing a specific syntax structure***"). SAMSUNG-1005, 227-228, FIG. 9.1; SAMSUNG-1003, ¶[183].

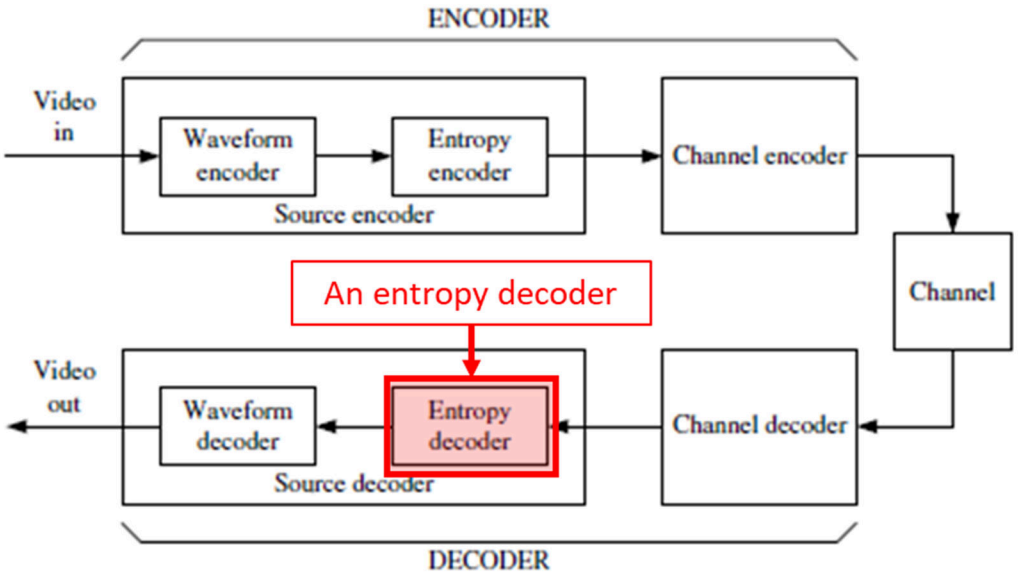

Figure 9.1: Typical video communication system

SAMSUNG-1005, FIG. 9.1 (annotated and color added).

[6.9.DEC]

Mualla discloses that the H.263 standard includes the techniques of inverse-quantization. SAMSUNG-1005, 51-52, 76. Specifically, Mualla discloses that "quantization is achieved by dividing the transform coefficient by a quantization step size and rounding the result ("***post-quantization data***") … [i]nverse quantization is the process of reconstructing an approximation of the original coefficient by multiplying the quantized coefficient by the same step size" ("***inverse-quantization to the post-quantization data to generate post-quantization orthogonal transform coefficients data***"). SAMSUNG-1005, 76. Mualla illustrates an "***inverse quantizer***" in its example H.263 video encoder. SAMSUNG-1005, FIG. 3.1. Dr. Reader explains that a POSITA would have recognized and found obvious that a similar component would have been included in the decoder of a codec. SAMSUNG-1003, ¶[184].

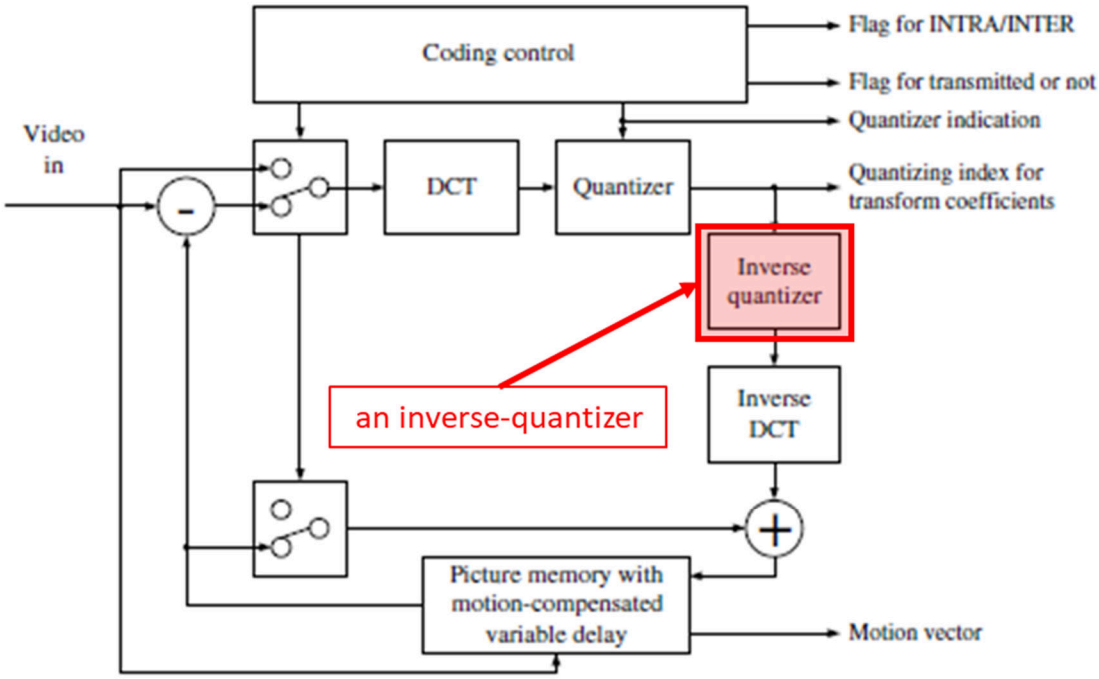

Figure 3.1: H.263 video encoder

SAMSUNG-1005, FIG. 3.1 (annotated and color added).

In particular, a POSITA would have recognized or found obvious that the decoder would "***perform inverse quantization***," for example, by using an "***inverse-quantizer***," as this was well-known before the Critical Date. SAMSUNG-1003, ¶[185]. Indeed, Girod corroborates the use of "inverse-quantizer[s]" in H.263 decoders and illustrates this component in its example H.263 decoder. SAMSUNG-1008, 2, FIG. 1(b)

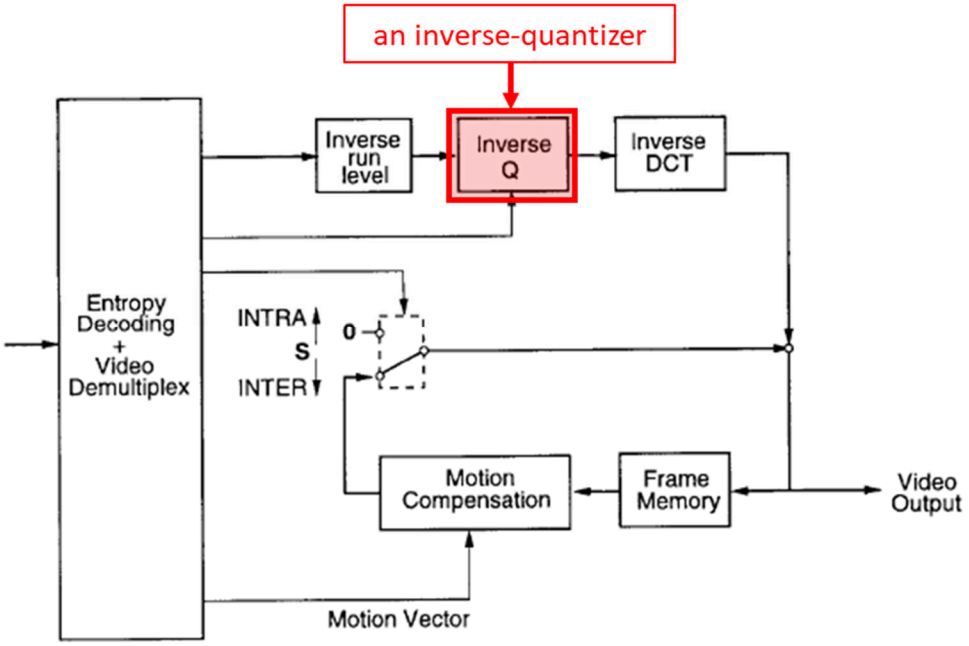

SAMSUNG-1008, FIG. 1(b) (annotated and color added).

[6.10.DEC]

As discussed in §III.A.1, above, Mualla discloses an H.263-based system that implements inverse-orthogonal transforms. SAMSUNG-1005, 51-52, 76. Specifically, Mualla discloses the encoder performs "transform coding" where a "unitary space-frequency transform is applied to each block [in an input frame] to produce an N × N block of transform (spectral) coefficients that are then suitably quantized" ("***post-quantization orthogonal transform coefficients data***"). SAMSUNG-1005, 52, FIG. 2.9; SAMSUNG-1003, ¶[186]. At the decoder, "an inverse transform is applied to reconstruct the frame" ("***an inverse-orthogonal trans-***

former to perform inverse-orthogonal transform to the post-quantization orthogonal transform coefficients data"). *Id*. FIG. 2.9 of Mualla illustrates an "[i]nverse transform" component in an example "transform coding system." *Id*.

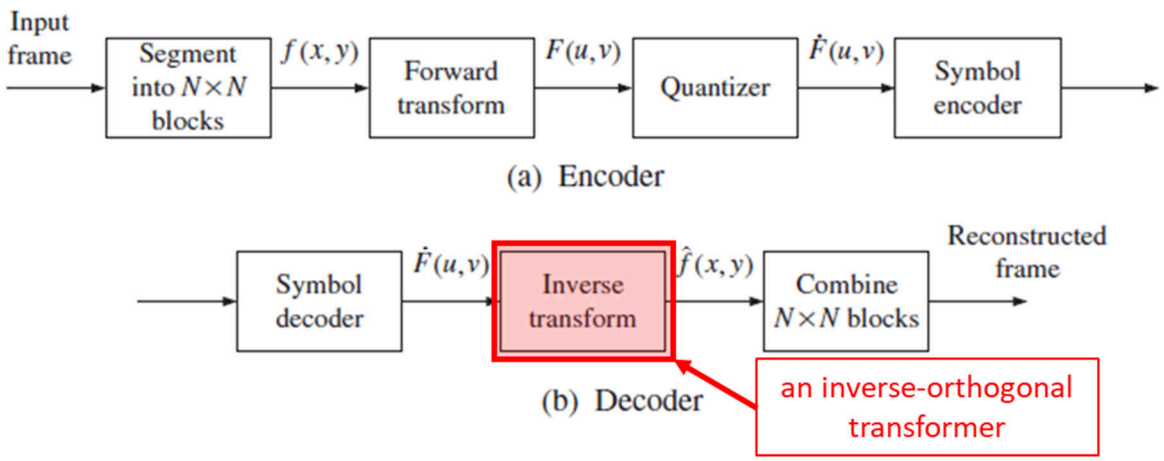

Figure 2.9: Block diagram of a transform coding system

SAMSUNG-1005, FIG. 2.9 (annotated and color added).

Moreover, a POSITA would have recognized or found obvious that the decoder would include an "***inverse-orthogonal transformer***" as this was well-known in the art before the Critical Date. SAMSUNG-1003, ¶[187]. Indeed, Girod corroborates the use of inverse transforms in H.263 decoders. SAMSUNG-1008, 2, FIG. 1(b); SAMSUNG-1003, ¶[187].

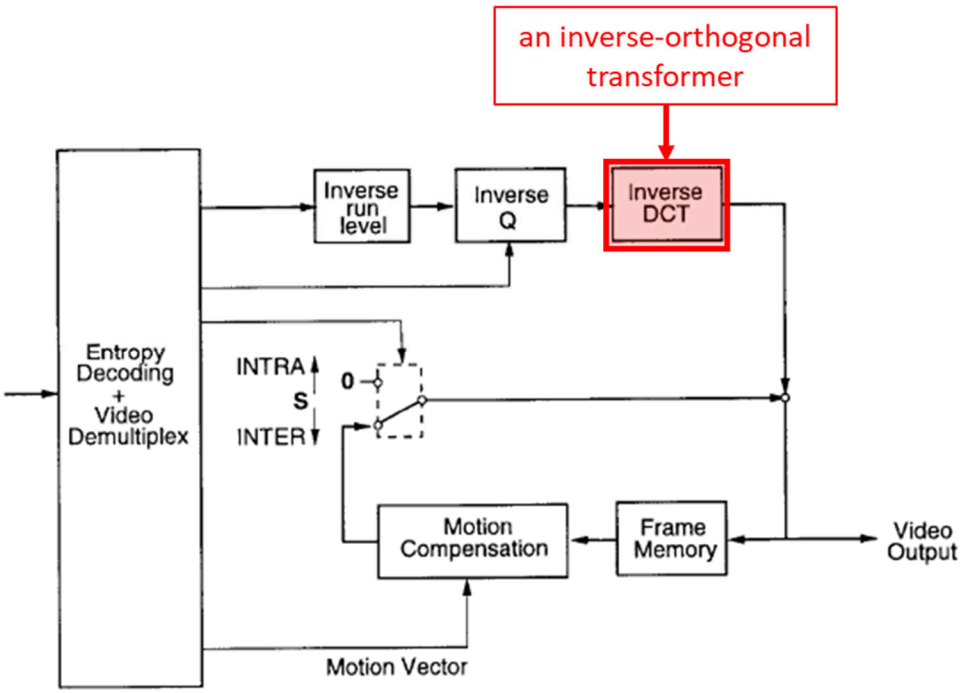

SAMSUNG-1005, FIG. 1(b) (annotated and color added).

[6.11.DEC]

As discussed above, the Mualla-Shirani-Saito combination implements a two-stage hybrid error concealment in **both** the **encoder** and the **decoder** by using "interactive techniques," as taught by Mualla. SAMSUNG-1005, 246-250; SAMSUNG-1003, ¶[188]. As described above in [6.2.COD] and [6.6.COD]-[6.7.COD], the **encoder** of the Mualla-Shirani-Saito combination defines "***a boundary condition of a border that corresponds to the border motion vector data, from the reference picture based on the border motion vector data***" and "***generate[s] an esti-***

mated video signal in each rectangular zone in the picture to be coded, that satisfies Poisson's Equation, thus producing a first predictive picture." *See supra*, [6.2.COD], [6.6.COD]-[6.7.COD]. Thus, a POSITA would have understood or found obvious that the **decoder** of the Mualla-Shirani-Saito combination would perform analogous operations by using the same two-stage hybrid error concealment technique. SAMSUNG-1003, ¶[188].

Furthermore, Mualla refers to the first-stage temporal concealment as "**motion-compensated** error concealment." SAMSUNG-1005, 27. Mualla explains that "[**a]s in motion-compensated prediction**, the process of temporal concealment involves two stages: *concealment displacement estimation* and *displacement compensation*, as shown in Figure 9.8(a). For this reason, temporal concealment is sometimes referred to as **motion-compensated concealment**." SAMSUNG-1005, 243, Figure 9.8(a) (reproduced below, annotated); SAMSUNG-1003, ¶¶[189].

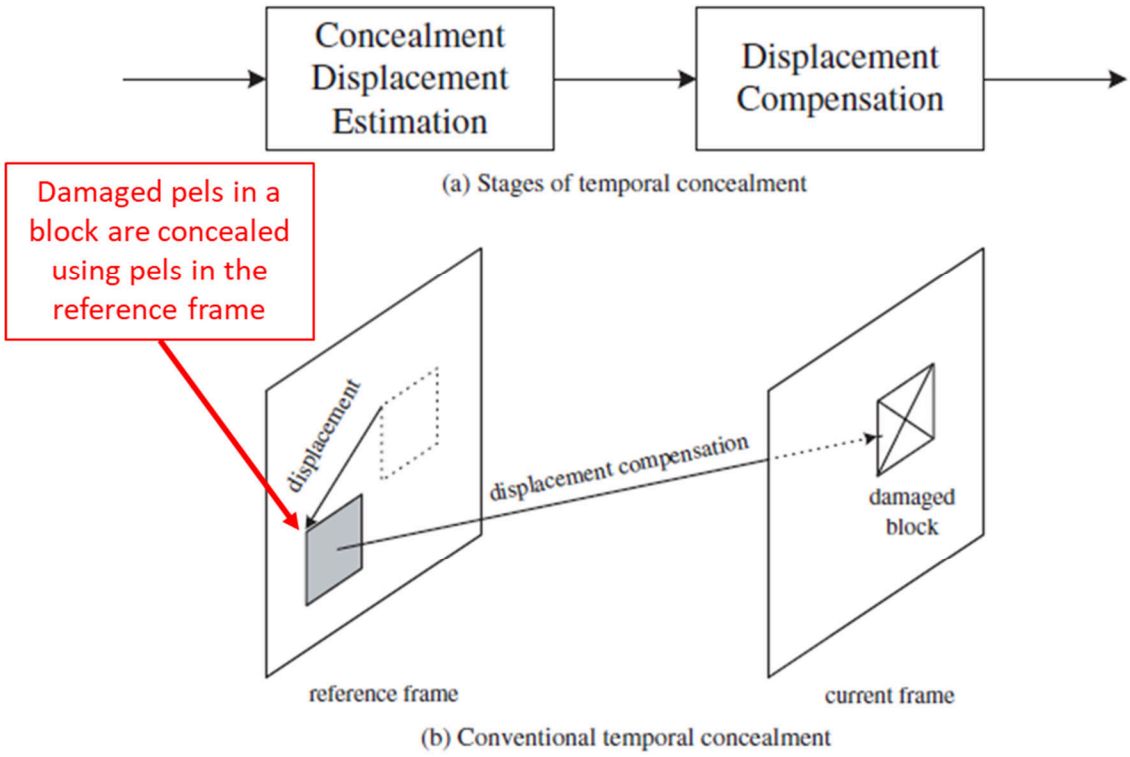

Figure 9.8: Temporal error concealment

SAMSUNG-1005, FIG. 9.8 (annotated)

Moreover, as Dr. Reader explains, "the additional techniques of Shirani and Saito are simply 'algorithms' that can be executed by computer program modules" ("***a zone-border motion compensator***"). SAMSUNG-1006, 1-2; SAMSUNG-1007, 6; SAMSUNG-1003, ¶[190]. Accordingly, the encoding features discussed in encoding limitations [6.2.COD], [6.6.COD]-[6.7.COD] would be similarly implemented within the decoder of Mualla-Shirani-Saito. SAMSUNG-1003, ¶[190].

Thus, a POSITA would have understood or found obvious that the **decoder** of the Mualla-Shirani-Saito combination implements "motion compensated error

concealment techniques" as part of a two-stage hybrid "error concealment" algorithm (the claimed "***zone-border motion compensator***"), which includes a first-stage temporal concealment stage (which defines "***a boundary condition of a border that corresponds to the border motion vector data, from the reference picture based on the border motion vector data***") and a second-stage spatial concealment stage (which "***generate[s] an estimated video signal in each rectangular zone in the picture to be coded, that satisfies Poisson's Equation, thus producing a first predictive picture***"). SAMSUNG-1003, ¶[191].

[6.12.DEC]

Mualla describes a well-known decoding process in which a "prediction" ("***the first predictive picture***") generated by motion-estimation and motion-compensation (the "***zone border motion compensation***" of Mualla-Shirani-Saito) is "added to" (or summed with) ("***combine the first predictive picture and the decoded residual picture***") an "error signal" ("***the decoded residual picture***"), which is the result of inverse DCT, to "reconstruct the current frame" ("***generate a decoded moving picture signal***"). SAMSUNG-1005, 27, 76, FIG. 10.8; *see supra* [6.6.11.DEC]; SAMSUNG-1003, ¶[192]. Indeed, Mualla's error concealment technique "***generate[s] a decoded moving picture signal***" by concealing missing/erroneous/damaged blocks, as shown in Figure 10.8. *Id*.

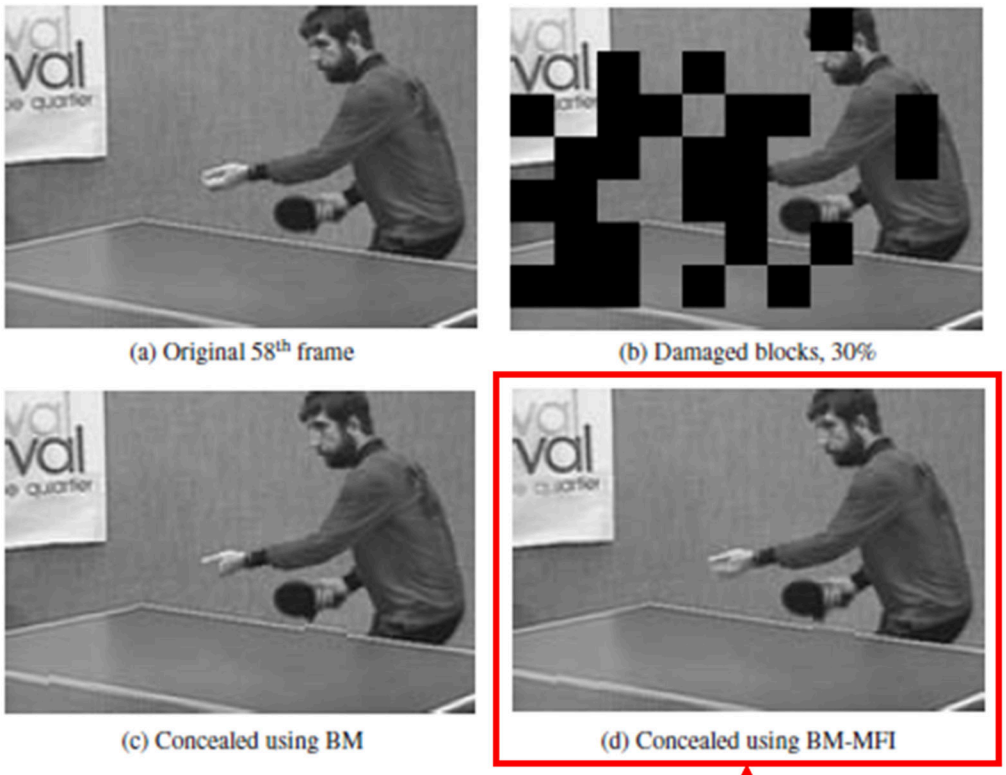

Figure 10.8: Subjective quality of concealed 58th frame of QSIF Table Tennis at 30 frames/s with a block loss rate of 30%

combin[ing] the first predictive picture and the decoded residual picture to generate a decoded moving picture signal

SAMSUNG-1005, FIG. 10.8 (annotated).

Thus, for a given frame (picture) that is being decoded, (i) coded data for some macroblocks of the frame are received without error and are decoded using Mualla's conventional "motion estimation" and "motion compensation," whereas (ii) coded data for other macroblocks of the frame are erroneously received and concealed using the Mualla-Shirani-Saito two-stage hybrid error concealment technique. The result is an aggregate predicted frame ("***the first predictive picture***")

that is combined with Mualla's "decoded [displaced-frame difference] DFD" ("***the decoded residual picture***"). The combining technique is analogous to the combining technique implemented in Mualla's conventional motion-estimation-compensation decoding. SAMSUNG-1005, FIG. 1.1; SAMSUNG-1003, ¶[193].

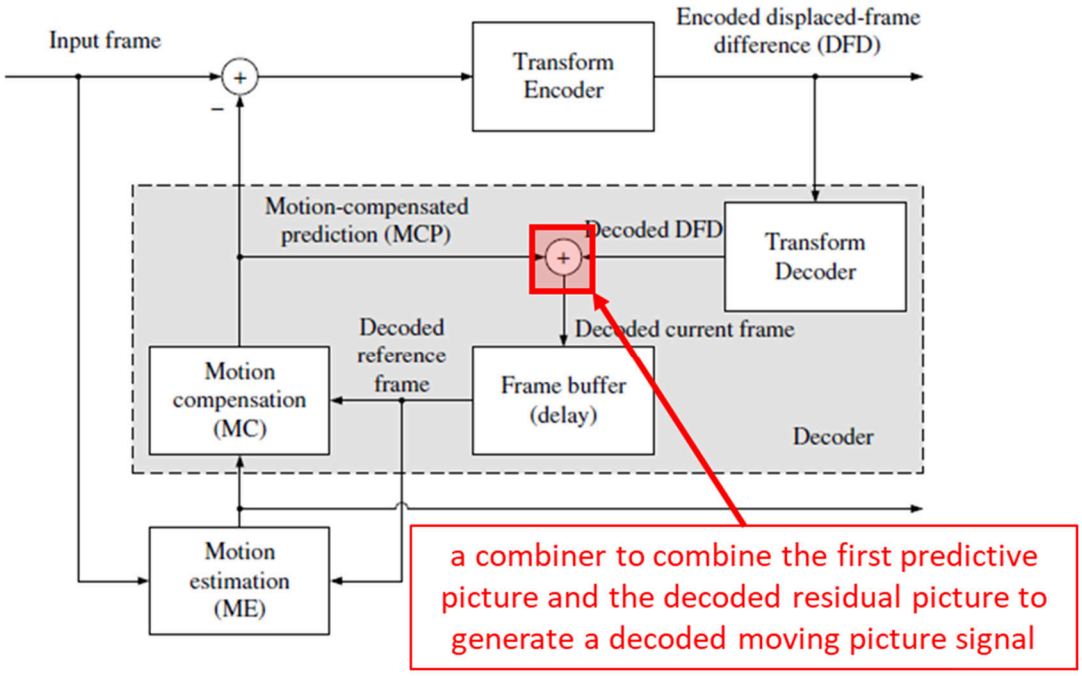

Figure 1.1: Typical video codec

SAMSUNG-1005, FIG. 1.1 (annotated and color added).

A detailed example of such a combining step is provided in Stockhammer (SAMSUNG-1009). As discussed in Section III.A.1, above, decoding is performed on a per-macroblock basis. For a given macroblock of the frame, if an error is detected in the coded data of the macroblock, then the decoder performs "error concealment" and the second selector at the bottom-right-hand corner of the red shaded area is in the upper-most position and provides the error concealment

output (the "***first predictive picture***") to a combiner (annotated). SAMSUNG-1009, 8, Fig. 6 (reproduced below, annotated); SAMSUNG-1003, ¶[194]. As shown in Fig. 6, the other input to the combiner is the output of the "dequantizer/inverse transform." *Id*. As explained in [6.9.DEC] and [6.10.DEC], the output of dequantizer/inverse transform is a "***decoded residual picture***."

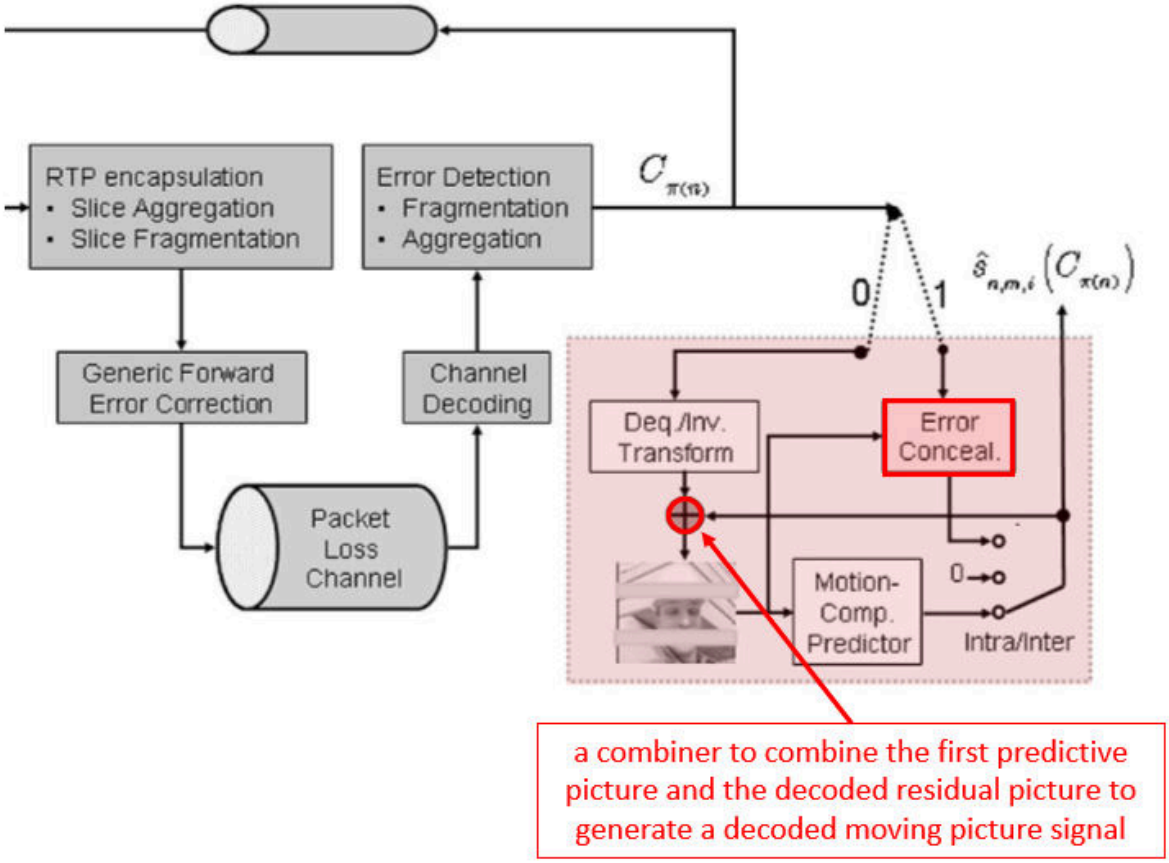

SAMSUNG-1009, FIG. 6 (annotated and color added).

Conversely, if no errors are detected in the coded data of the macroblock, then the decoder applies the conventional "motion compensated predictor" and the second selector at the bottom-right-hand corner of the red shaded area is in the

lower-most position and provides the output of the motion compensated predictor to the combiner (annotated). SAMSUNG-1009, 8, Fig. 6; SAMSUNG-1003, ¶[195].

For all macroblocks in the frame (both those received in error and without error), the decoder generates reconstructed samples $\hat{s}_{n,m,i}(o, C_{\pi(n)})$ that form a reconstructed image (the "***decoded moving picture signal***"). SAMSUNG-1003, ¶[196].

[6.13.DEC]

Mualla describes the well-known feature of a decoder including a "***memory***" to store a "***reference picture***" which is the "***decoded moving-picture signal***" that was generated by combining the residual picture and the predictive picture. SAMSUNG-1005, 26-27, FIG. 1.1; *see supra*, [6.12.DEC]; SAMSUNG-1003, ¶[197]. For example, Mualla discloses that "reference frame[s]" ("***reference picture[s]***") are "stored in a frame buffer" ("***a memory***"). *Id*.

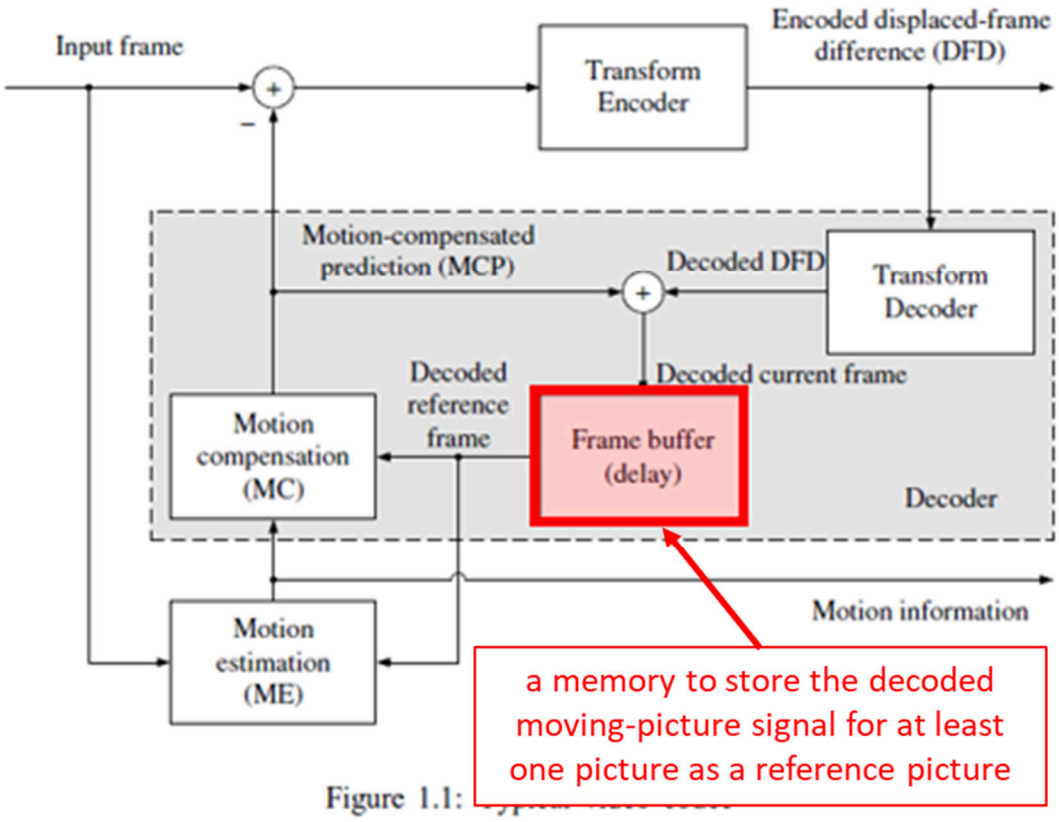

SAMSUNG-1005, FIG. 1.1 (annotated and color added).

Additionally, the use of a "***memory***" to "***store … a reference picture***" was well-known in the art before the Critical Date. SAMSUNG-1003, ¶[198]. For example, Girod discloses that a H.263 decoder includes a "frame memory" which stores "decoded frames." SAMSUNG-1008, 2.

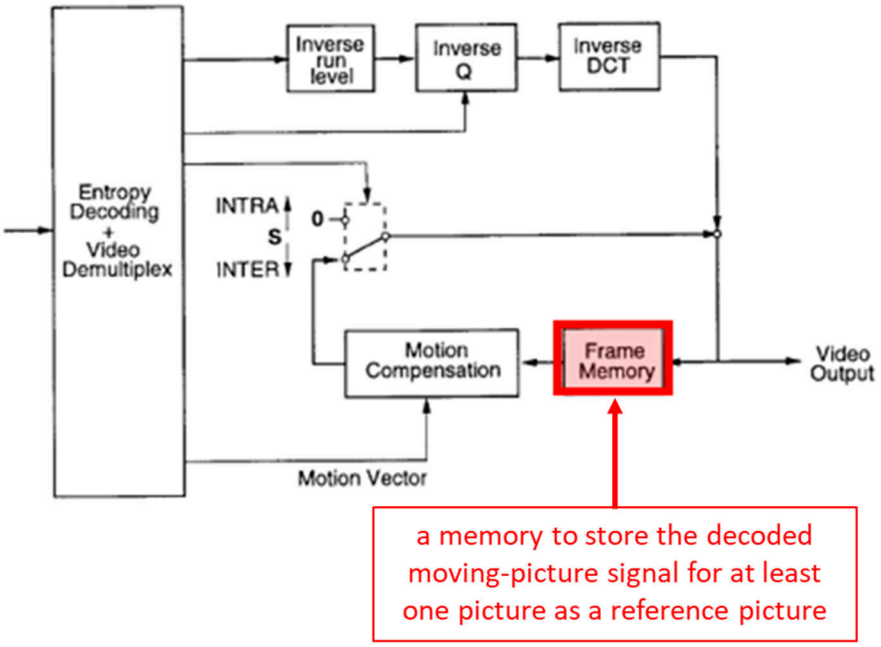

SAMSUNG-1008, FIG. 1(b) (annotated and color added).

[6.14.DEC]

Mualla's "typical video codec" includes the well-known feature of "motion compensation." SAMSUNG-1005, 26-27, 76, 115-116, FIG. 1.1, 2.16; SAMSUNG-1003, ¶[199]. Indeed, Mualla discloses that a "motion estimation (ME) block uses a motion model to estimate the movement that occurred between [a] current frame and a reference frame" ("***specify a corresponding rectangular zone in the reference picture based on the motion vector data***"). SAMSUNG-1005, 26-27, 116-117; SAMSUNG-1003, ¶[199]. Then, "[a]t the decoder, the same reference frame is used along with the received motion information to produce the same prediction" ("***thus generating a second predictive picture***"). *Id*. FIG. 1.1

below illustrates motion compensation in Mualla's typical video codec.

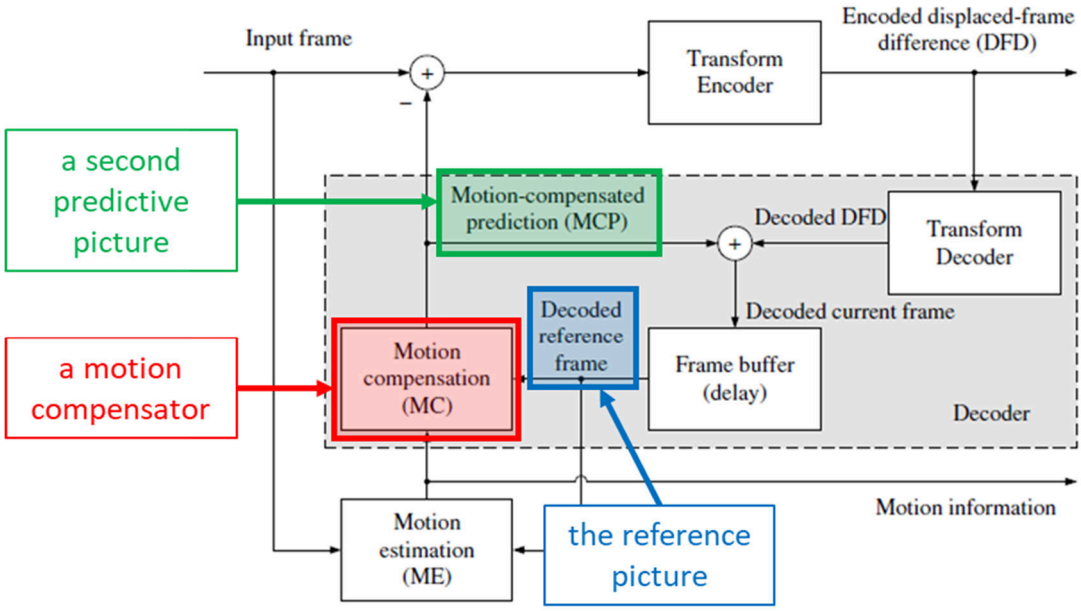

Figure 1.1: Typical video codec

SAMSUNG-1005, FIG. 1.1 (annotated and color added).

Additionally, Mualla discloses a process of using a "motion vector" ("***based on the motion vector data***") to determine a "block" in the reference frame ("***a corresponding rectangular zone in the reference picture***") that matches the current frame. SAMSUNG-1005, 76; SAMSUNG-1003, ¶[200]. This process is illustrated in FIG. 2.16 below.

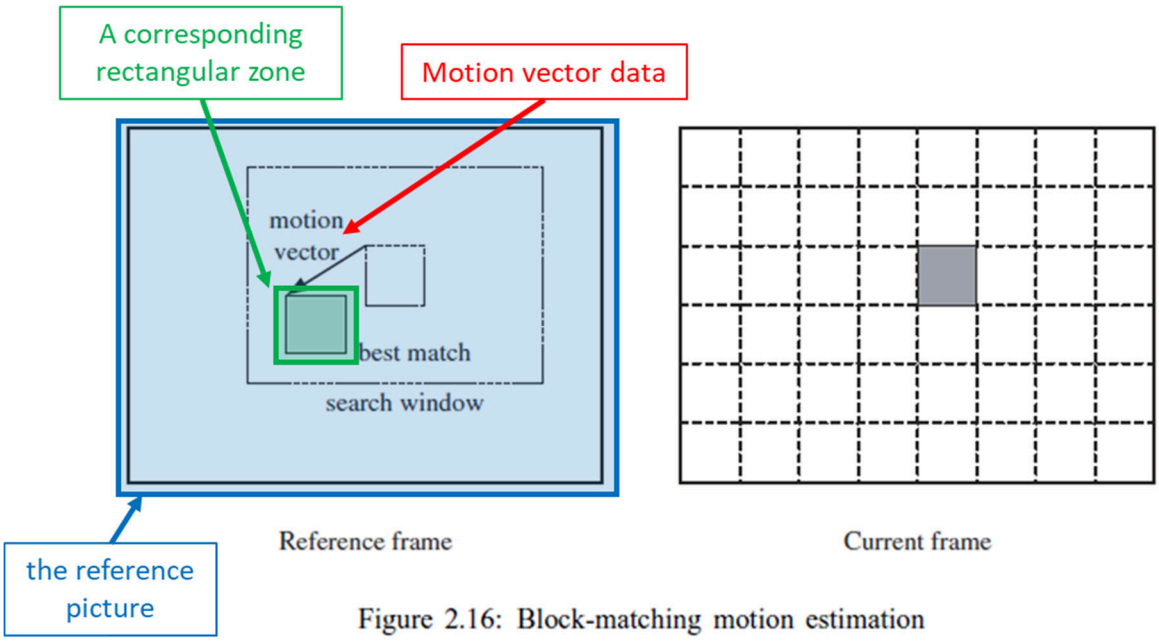

Figure 2.16: Block-matching motion estimation

SAMSUNG-1005, FIG. 2.16 (annotated and color added).

Moreover, the techniques of motion compensation were well-known before the Critical Date. SAMSUNG-1003, ¶[201]. Indeed, Shirani describes the use of "motion compensation" ("***a motion compensator***") and "motion vectors" ("***motion vector data***") to identify "motion compensated blocks" ("***a corresponding rectangular zone in the reference picture***"). SAMSUNG-1006, 1-2.

[6.15.DEC]

Mualla discloses that its error concealment techniques can be deployed "[w]hen an error is detected," and that during this period, the "decoding process is stopped." SAMSUNG-1005, 265. From at least this disclosure, a POSITA would have recognized and found obvious that tradition motion compensation (producing

a "***second predictive picture***") would execute until an error was detected by the decoder in the bitstream, at which point the error concealment techniques of the Mualla-Shirani-Saito combination would be used to generate replacement motion vector and video data (a "***first predictive picture***"). SAMSUNG-1005, 265; SAMSUNG-1003, ¶[202].

As Dr. Reader explains, a POSITA would have recognized or found obvious that switching between these two methods of decoding ("***select[ing] either the first predictive picture or the second predictive picture***") would be effectuated by a switching component, such as a "***selector***." SAMSUNG-1003, ¶[203]. Indeed, Girod (cited by Mualla) corroborates selecting between two different decoding modes in response to detected errors, as "an erroneous bit stream cannot be gracefully decoded by an 'off-the-shelf' video decoder build [sic] for error-free transmission." SAMSUNG-1008, 4. Girod explains that, in the case of errors, "[s]pecial provisions for error detection, resynchronization, and concealment are required." *Id*. Stockhammer[3] also corroborates the use of a "selector" to switch between traditional motion compensation and error concealment. SAMSUNG-1009,

[3] Although Stockhammer's teachings are within the general knowledge of a POSITA, a POSITA would have additionally combined Stockhammer into the

FIG. 6; SAMSUNG-1003, ¶[203].

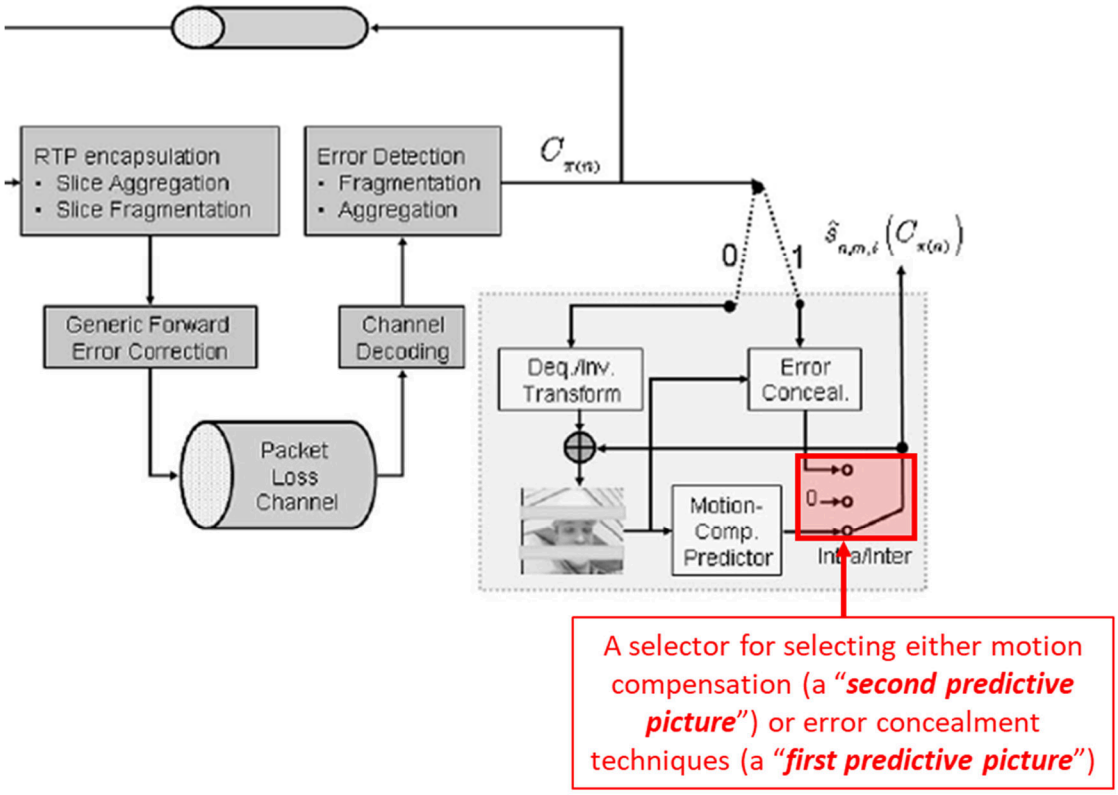

SAMSUNG-1009, FIG. 6 (annotated and color added).

Moreover, Mualla uses a "***selector***" to control inter or intra coding. SAMSUNG-1005, 72, FIG. 3.1. As Dr. Reader explains, using a selector to switch between normal decoding and error concealment "would have been a natural extension of techniques disclosed within Mualla." SAMSUNG-1003, ¶[204].

Mualla-Shirani-Saito combination for the reasons discussed above. *See supra*, §III.A.1-3.

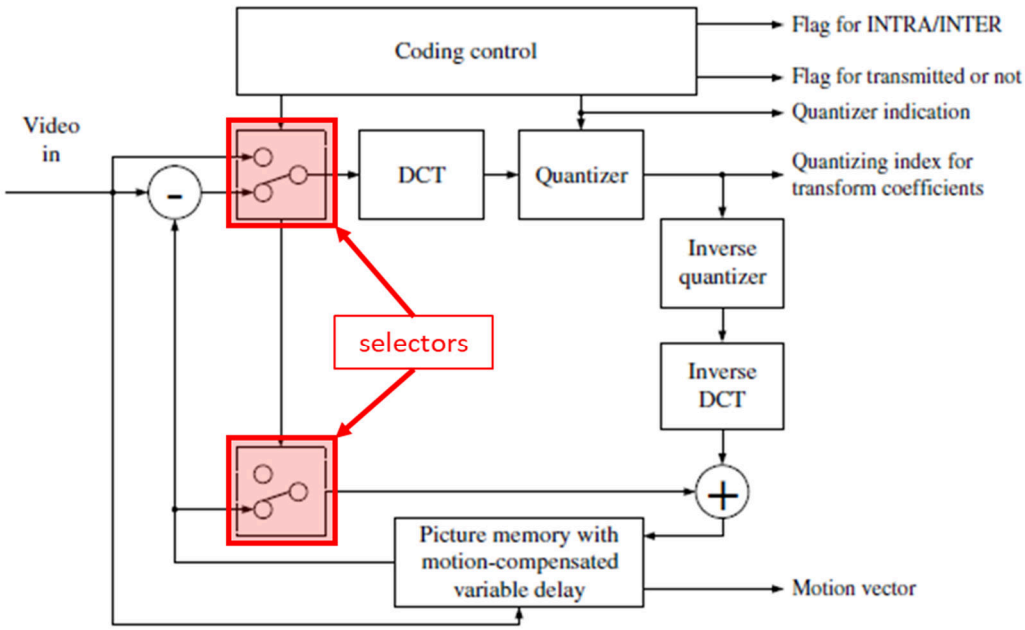

Figure 3.1: H.263 video encoder

SAMSUNG-1005, FIG. 3.1 (annotated and color added).

[6.16.DEC]

As explained above in [6.15.DEC], the Mualla-Shirani-Saito combination would have switched, via a "selector" or equivalent component, between conventional motion compensation and error concealment, depending on the presence of errors in the bitstream. *See supra*, [6.15.DEC]. Additionally, Mualla also discloses that these errors can be detected from "syntax and semantic violations," the "header information" being one source of this data ("***decoding control data for decoding control from the parameter data***"). SAMSUNG-1005, 231-232. Additionally, Mualla's H.263 video encoder includes a "coding control" component ("***a decoding controller***") that is "responsible for varying several parameters to control

the rate or the quality of the coded video." SAMSUNG-1005, 72, 75, FIG. 3.1; SAMSUNG-1003, ¶[205]. Examples of functions that are controlled by the coding control component are "INTER/INTRA mode decision at the picture or MB level, the update pattern of the forced INTRA refresh, the TRANSMIT=SKIP decision at the MB level, and the QP and its change at the picture, GOB, or MB level." SAMSUNG-1005, 75; SAMSUNG-1003, ¶[205]. Illustrated below is Mualla's example H.263 encoder with a "coding control" component that controls operations of the local decoder (the bottom switch).

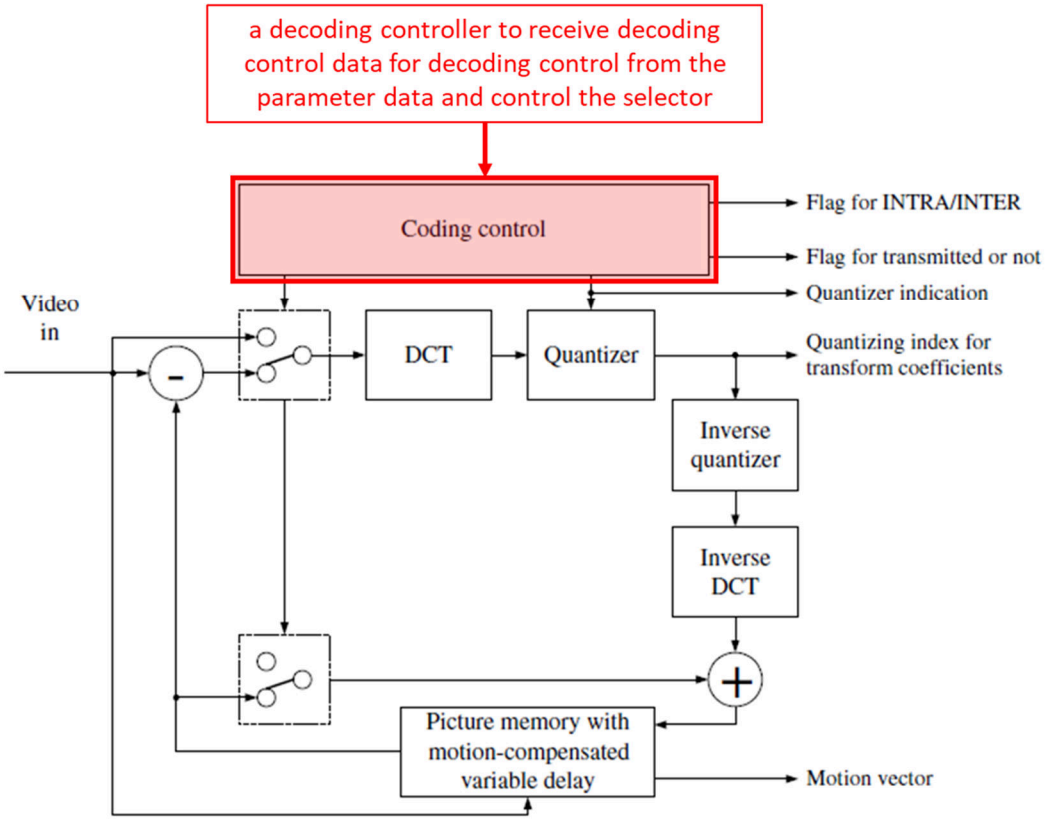

Figure 3.1: H.263 video encoder

SAMSUNG-1005, FIG. 3.1 (annotated and color added).

As Dr. Reader explains, a POSITA would have recognized or found obvious that Mualla's decoder would have implemented an analogous coding control component ("***a decoding controller***") would have "***receive[d] decoding control data for decoding control from the parameter data***" and subsequently, in response to a detected error, "***control[ed] the selector to switch the predictive picture to be supplied to the combiner between the first and second predictive pictures according to the decoding control data***." SAMSUNG-1003, ¶[206]. Indeed, this function is consistent with the operations of the coding controller described by Mualla, and as Dr. Reader explains, "Mualla's coding controller must necessarily process syntax data ('***decoding control data for decoding control from the parameter data***') at least because it must make decisions regarding 'inter' or 'intra' prediction." SAMSUNG-1003, ¶[206].

Additionally, as illustrated in Stockhammer's Figure 6 (reproduced below) and as discussed in [6.15.DEC], above, it was known that an H.264-based decoder can implement a ***decoding controller*** that determines whether an error has been detected (either binary 0 or 1) and controls a ***selector*** to switch between the outputs of the "error concealer" (the "***first predictive picture***") or the output of the conventional "motion compensated predictor" (the "***second predictive picture***") SAMSUNG-1009, FIG. 6; SAMSUNG-1003, ¶[207].

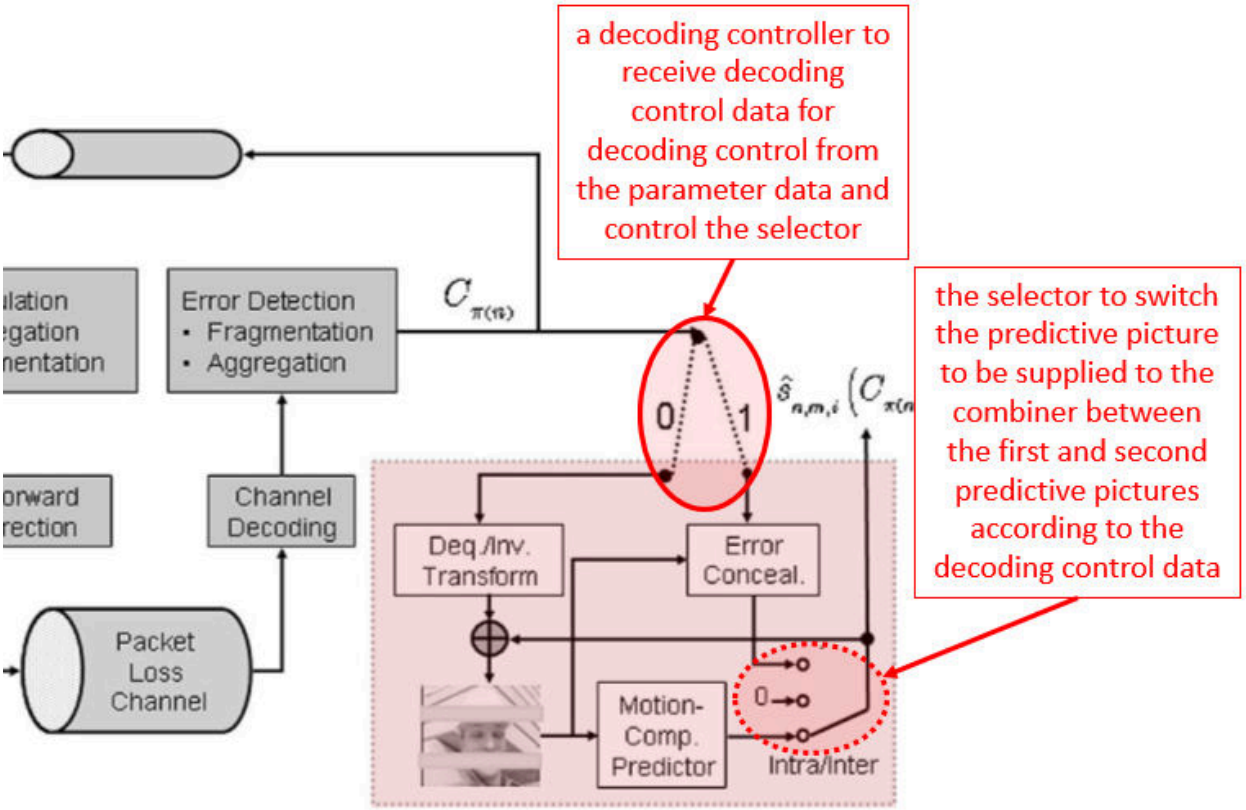

SAMSUNG-1009, FIG. 6 (annotated and color added).

[7.pre]

Mualla discloses "software-based video codecs" ("***non-transitory computer readable device***") that utilize various "algorithms" ("***a computer program comprising a set of instructions***"). SAMSUNG-1005, 71, 182, 265, 299. For example, Mualla provides an example of a specific software implementation of H.263 called "Telenor" (citing to a "H.263 TMN software codec" as reference [144]) ("***a***

method for moving-picture decoding"). SAMSUNG-1005, 265, 299; SAMSUNG-1003, ¶[208].

Moreover, the use of algorithms in implementing codecs was well-known before the Critical Date. SAMSUNG-1003, ¶[209]. Indeed, both Shirani and Stockhammer corroborate the use of "algorithms" and "software" in implementing H.263 and H.264 codecs. SAMSUNG-1006, 1 ("many of the video compression algorithms (e.g., H.263)"); SAMSUNG-1009, 1, 5 ("in the standardization of H.264/AVC for the development of the reference software").

[7.1.DEC]-[8.3], [10.pre]-[10.13.DEC]

These limitations are obvious as explained above for the corresponding limitations listed in the following table. SAMSUNG-1003, ¶[210].

Claim	Corresponding Claim
[10.pre]	[6.pre]
[7.1.DEC], [10.1.DEC]	[6.1.DEC]
[7.2.COD], [10.2.COD]	[6.2.COD]
[7.3.COD], [10.3.COD]	[6.3.COD]
[7.4.COD], [10.4.COD]	[6.4.COD]
[7.5.COD], [10.5.COD]	[6.5.COD]
[7.6.COD], [10.6.COD]	[6.6.COD]
[7.7.COD], [10.7.COD]	[6.7.COD]
[7.8.DEC], [8.pre], [10.8.DEC]	[6.8.DEC]

[7.9.DEC], [10.9.DEC]	[6.9.DEC]
[7.10.DEC], [10.10.DEC]	[6.10.DEC]
[7.11.DEC], [10.11.DEC]	[6.11.DEC]
[7.12.DEC], [10.12.DEC]	[6.12.DEC]
[8.1]	[6.14.DEC]
[8.2]	[6.15.DEC]
[8.3]	[6.16.DEC]
[10.13.DEC]	[6.13.DEC]

"Moving picture coding" claims 1-5, 9

[1.pre], [4.pre], [9.pre]

Mualla teaches extensive details of an H.263-based video codec system, which implements ***coding apparatus***, ***method****, and* ***media*** for decoding ***moving pictures*** (e.g., "video"). SAMSUNG-1005, 23-26, 31, 36, 51-52, 61-63, 227-228, 241-242, 265. For example, as discussed in §III.A.1, above, Mualla's Figure 9.1 and accompanying description disclose a "typical video communication system" which includes a "source encoder" ("***coding apparatus***, ***method****, and* ***media***"). SAMSUNG-1005, Figure 9.1 (reproduced below), 227-228. Further details of Mualla's "source encoder" are illustrated and described with reference to Figures 2.3, 1.1, and 2.9 of Mualla, as explained in §III.A.1, above. To facilitate understanding, aggregated views of the relation between these different figures of

Mualla are shown in Diagrams A and B discussed in §III.A.1, above, which are reproduced again below. SAMSUNG-1003, ¶[211].

Additionally, as discussed above in [7.pre], "***non-transitory computer readable device***" is both disclosed by Mualla and further would have been an obvious implementation choice to a POSITA. *See supra* [7.pre]; SAMSUNG-1003, ¶[212].

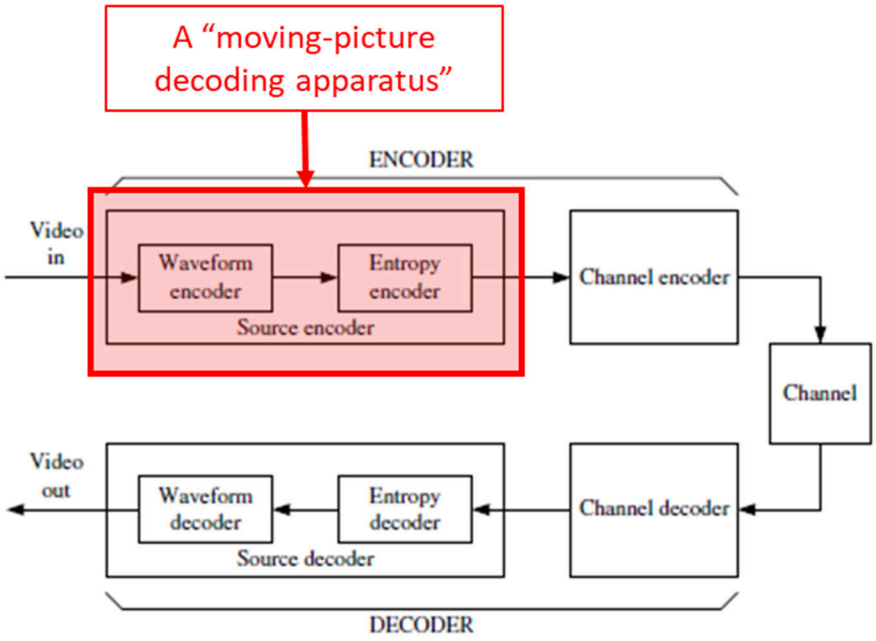

Figure 9.1: Typical video communication system

SAMSUNG-1005, FIG. 9.1 (annotated and color added).

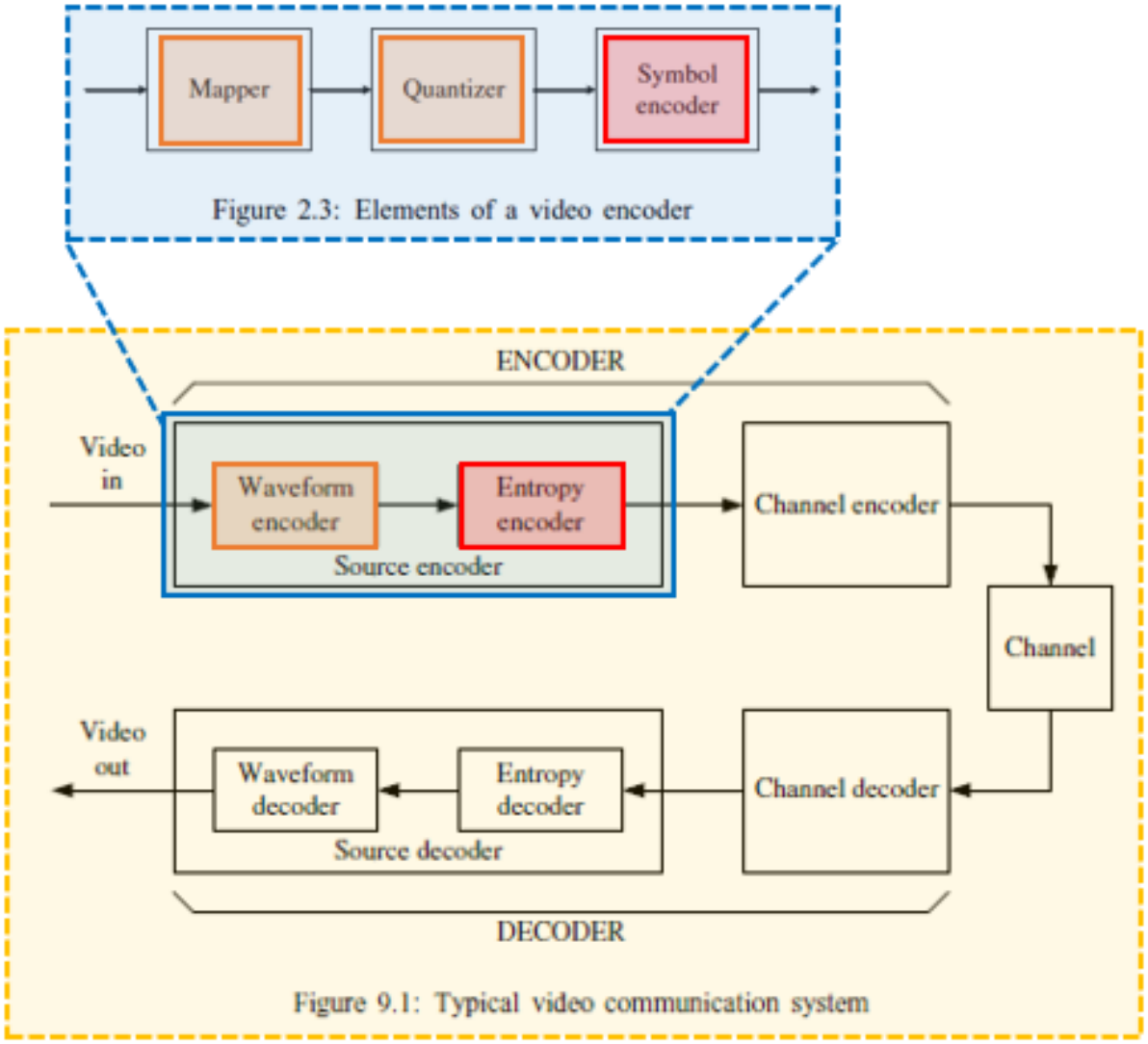

Diagram A (showing the relation between Mualla's Figures 9.1 and 2.3)

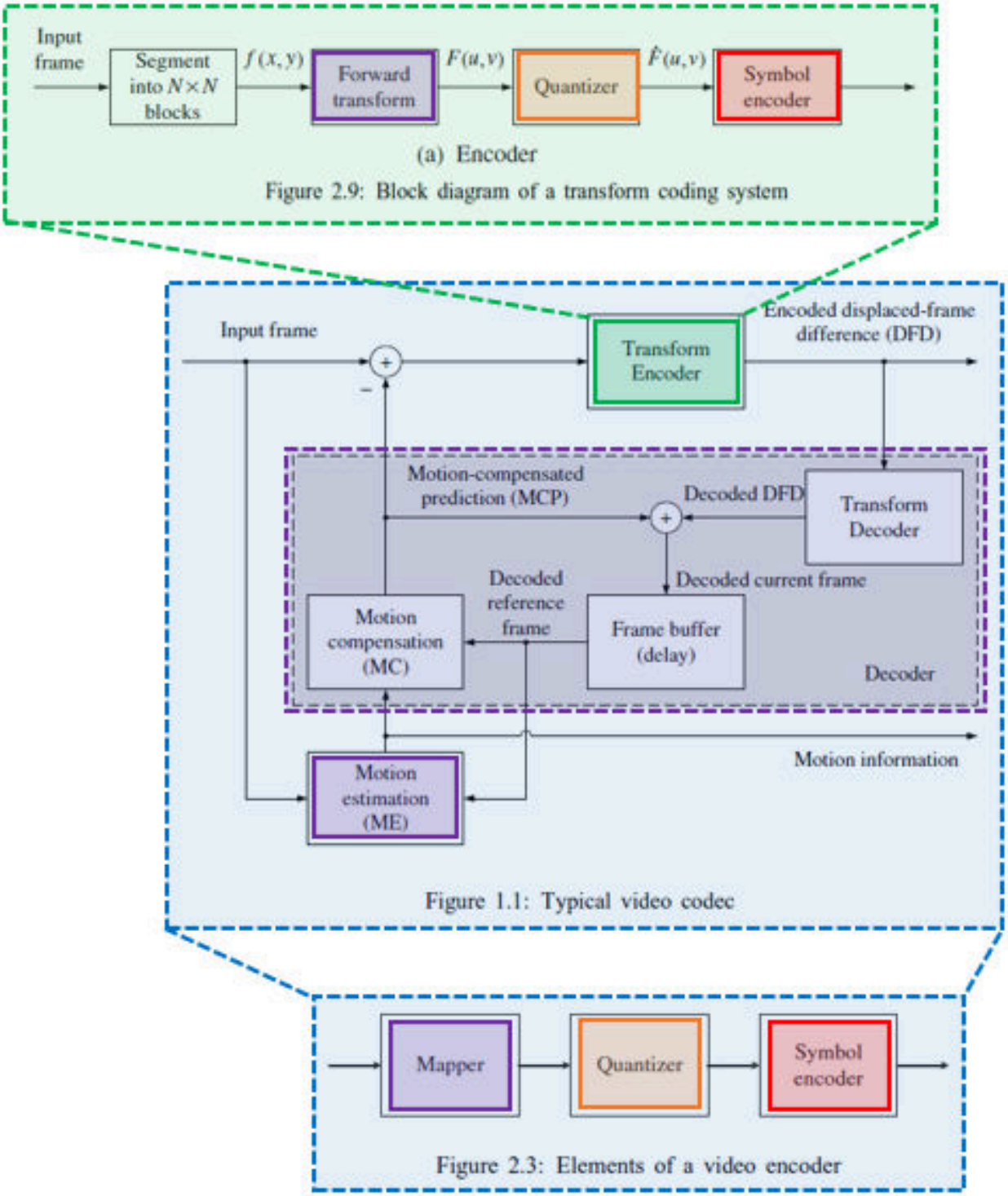

Diagram B (showing the relation between Mualla's Figures 2.3, 1.1, and 2.9)

[1.8.COD], [2.3], [4.8.COD], [5.3], [9.6.COD]

Mualla's "typical video codec" illustrates a component ("***a first subtractor***") that subtracts the "[m]otion-compenstated prediction (MCP)" ("***the first predictive picture***") from an "[i]nput frame" ("***the picture to be coded***") to produce, after transform encoding, an "[e]ncoded displaced-frame difference (DFD)" ("***a first residual picture***"). SAMSUNG-1005, 23-26, FIG. 1.1; SAMSUNG-1003, ¶[213].

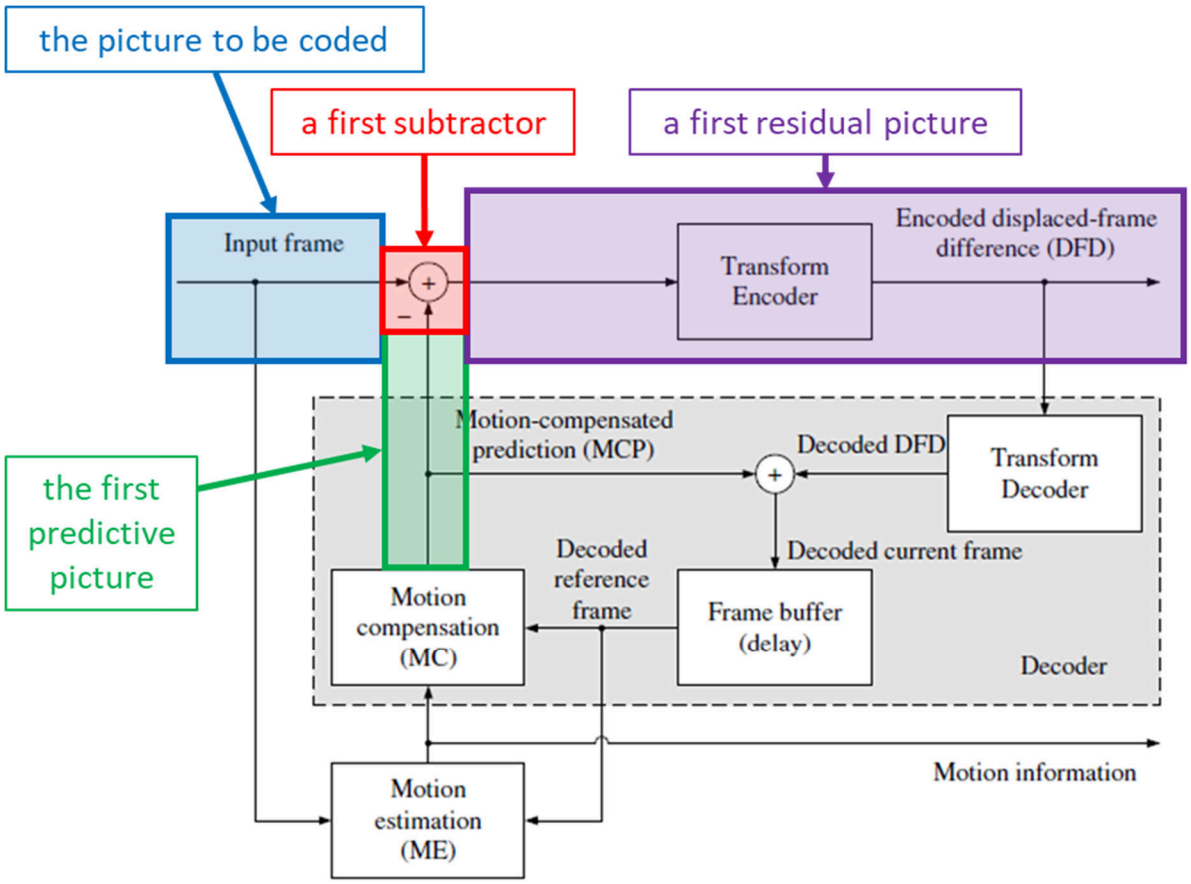

Figure 1.1: Typical video codec

SAMSUNG-1005, FIG. 1.1 (annotated and color added).

Remaining limitations of Claims 1, 4, and 9

These limitations are obvious as explained above for the corresponding limitations listed in the following table. SAMSUNG-1003, ¶[214].

Claim	Corresponding Claim
[1.1.COD], [4.1.COD], [9.1.COD]	[6.3.COD]
[1.2.COD], [4.2.COD], [9.2.COD]	[6.4.COD]
[1.3.COD], [4.3.COD], [9.3.COD]	[6.5.COD]
[1.4.COD], [1.5.COD], [4.4.COD], [4.5.COD], [9.4.COD]	[6.6.COD]
[1.6.COD], [4.6.COD], [9.5.COD]	[6.7.COD]
[1.7.COD], [4.7.COD]	[6.3.COD]
[1.9.COD], [1.10.COD], [4.9.COD], [4.10.COD], [4.14.COD], [9.7.COD], [9.8.COD]	[6.2.COD]
[1.11.DEC], [4.11.DEC], [9.9.DEC]	[6.9.DEC]
[1.12.DEC], [4.12.DEC], [9.10.DEC]	[6.10.DEC]
[4.13.COD]	[6.8.DEC]
[2.1], [5.1]	[6.2.COD]
[2.2], [5.2]	[6.14.DEC]
[2.4], [5.4]	[6.15.DEC]
[5.5]	[6.16.DEC]

IV. PTAB DISCRETION SHOULD NOT PRECLUDE INSTITUTION

A. Discretionary Denial under 325(d) is not warranted

The Examiner never issued a prior art rejection during the ’025 Patent’s prosecution. *See generally*, SAMSUNG-1002. There is no indication in the ’025 Patent’s file history that the Examiner substantively considered any of the prior art applied in this Petition prior to allowing the application that issued as the ’025 Patent. *Id*.

Because the ’025 Patent’s prosecution did not involve any discussion between the applicant and the Examiner regarding the teachings of the prior art applied in this Petition, the invalidity challenge based on the prior art asserted in this Petition is not the same as, or substantially similar to, art and arguments previously presented to the Office in connection with the ’025 Patent. *See, generally,* SAMSUNG-1002. Moreover, even if any of these references were somehow considered to be cumulative to references considered by the Examiner, the prosecution history never examined any of the claims in view of the asserted combinations of prior art references applied in this petition. *Id*. Accordingly, neither condition of the first prong of the *Advanced Bionics* framework is met, and there is no need to reach the second prong to resolve against discretionary denial under Section 325(d). *See*, *e.g.*, *Oticon Medical AB et. al. v. Cochlear Ltd.*, IPR2019-00975, Paper 15 at 20 (PTAB Oct. 16, 2019) (precedential).

Moreover, the Challenged Claims were allowed based on the Examiner’s mistaken view that the prior art failed to teach or suggest the features of the claims.

SAMSUNG-1002, 34-52. As demonstrated in this Petition and with reference to Dr. Reader's testimony, the Examiner's failure to consider obviousness of the Challenged Claims over the uncited references asserted in this Petition constitutes material error.

B. 35 U.S.C. §314(a) - – Discretionary Denial is not Merited in view of Petitioner's *Sotera* Stipulation

In *Apple Inc. v. Fintiv, Inc.*, the Board enumerated six factors to determine whether a petition should be discretionarily denied institution under §314(a). IPR2020-00019, Paper 11 at 2-3 (PTAB "precedential" Mar. 20, 2020) ("*Fintiv*"). In June 2022, the USPTO issued updated discretionary denial guidance in view of the *Fintiv* factors and expressly noted that ***the PTAB will not discretionarily deny institution if Petitioner presents a Sotera stipulation.*** SAMSUNG-1019. Here, Petitioner has eliminated any risk of duplicated effort by voluntarily presenting a *Sotera* stipulation to Patent Owner. SAMSUNG-1020; *Sotera Wireless, Inc. v. Masimo Corp.,* Case IPR2020-01019, Paper 12 (PTAB Dec. 1, 2020). For at least this reason, the Board should not discretionarily deny this petition.

V. CONCLUSION AND FEES

The Challenged Claims are unpatentable. Petitioner authorizes charge of fees to Deposit Account 06-1050.

VI. MANDATORY NOTICES UNDER 37 C.F.R § 42.8(a)(1)

A. Real Party-In-Interest Under 37 C.F.R. § 42.8(b)(1)

Samsung Electronics Co., Ltd. is the petitioner and real party-in-interest. Samsung Electronics America, Inc. is an additional real party-in-interest.

B. Related Matters Under 37 C.F.R. § 42.8(b)(2)

The ’025 Patent is the subject of a civil actions, *Advanced Coding Technologies LLC v. Samsung Electronics Co., Ltd. et al.*, 2:22-cv-00499-JRG, E.D. Tex., filed December 30, 2022 (SAMSUNG-1004) and *Advanced Coding Technologies LLC v. LG Electronics, Inc. et al.*, 2-22-cv-00501 E.D. Tex, filed December 30, 2022.

Petitioner is not aware of any other disclaimers, reexamination certificates, or IPR petitions addressing the ’025 Patent.

C. Lead And Back-Up Counsel Under 37 C.F.R. § 42.8(b)(3)

Petitioner provides the following designation of counsel.

Lead Counsel	Backup counsel
W. Karl Renner, Reg. No. 41,265 Fish & Richardson P.C. 60 South Sixth Street, Suite 3200 Minneapolis, MN 55402 Tel: 202-783-5070 Fax: 877-769-7945 Email:IPR39843-0168IP1@fr.com	Jeremy J. Monaldo, Reg. No. 58,680 Won S. Yoon, Reg. No. 71,058 60 South Sixth Street, Suite 3200 Minneapolis, MN 55402 Tel: 202-783-5070 Fax: 877-769-7945 PTABInbound@fr.com

D. Service Information

Please address all correspondence and service to the address listed above. Petitioner consents to electronic service by email at IPR39843-0168IP1@fr.com

(referencing No. 39843-0168IP1 and cc'ing PTABInbound@fr.com, axf-ptab@fr.com, jjm@fr.com, and yoon@fr.com).

Respectfully submitted,

Dated January 8, 2024

/Won S. Yoon/

W. Karl Renner, Reg. No. 41,265
Jeremy J. Monaldo, Reg. No. 58,680
Won S. Yoon, Reg. No. 71,058
Fish & Richardson P.C.
60 South Sixth Street, Suite 3200
Minneapolis, MN 55402
T: 202-783-5070
F: 877-769-7945

(Control No. IPR2024-00374)

Attorneys for Petitioner

CERTIFICATION UNDER 37 CFR § 42.24

Under the provisions of 37 CFR § 42.24(d), the undersigned hereby certifies that the word count for the foregoing Petition for *Inter Partes* Review totals 13,958 words, which is less than the 14,000 allowed under 37 CFR § 42.24.

Dated January 8, 2024

/Won S. Yoon/

W. Karl Renner, Reg. No. 41,265
Jeremy J. Monaldo, Reg. No. 58,680
Won S. Yoon, Reg. No. 71,058
Fish & Richardson P.C.
60 South Sixth Street, Suite 3200
Minneapolis, MN 55402
T: 202-783-5070
F: 877-769-7945

Attorneys for Petitioner

CERTIFICATE OF SERVICE

Pursuant to 37 CFR §§ 42.6I(4)(i) *et seq.* and 42.105(b), the undersigned certifies that on January 8, 2024, a complete and entire copy of this Petition for *Inter Partes* Review and all supporting exhibits were provided via Federal Express, to the Patent Owner, by serving the correspondence address of record as follows:

Fabricant LLP
411 Theodore Fremd Road
Suite 206 South
Rye, NY 10580

/Michael Stanwyck/
Michael Stanwyck
Fish & Richardson P.C.
60 South Sixth Street, Suite 3200
Minneapolis, MN 55402
(202) 626-7790