UNITED STATES PATENT AND TRADEMARK OFFICE
BEFORE THE PATENT TRIAL AND APPEAL BOARD

Samsung Electronics Co. Ltd. and Samsung Electronics America, Inc.
"Samsung"
Petitioners

v.

Advanced Coding Technologies, LLC
"ACT"
Patent Owner

INTER PARTES REVIEW OF U.S. PATENT NO. 8,090,025

DECLARATION OF DR. CLIFFORD READER

I declare that all statements made in this declaration on my own knowledge are true and that all statements made on information and belief are believed to be true, and further, that these statements were made with the knowledge that willful false statements and the like so made are punishable by fine or imprisonment, or both, under Section 1001 of Title 18 of the United States Code.

Date: 1/8/24.

By: C Reader

Clifford Reader, Ph.D.

Contents

I. Professional Background 7
A. Summary 7
B. Education 7
C. Work Experience 7
D. Standardization 8
E. Intellectual Property Rights 10
F. Curriculum Vitae 11
II. Digital Video Technologies 12
A. Analog Video 12
B. Digital Video 13
C. Video Coding 15
D. Video Coding Standards 19
1. Background 19
2. The MPEG1 Standards 20
3. The MPEG2 Standard 23
E. The H.263 Standard 24
F. The H.264 Standard 27
III. Relevant Legal Standards 29
IV. Person of Ordinary Skill in the Art 31
V. Overview of the Subject Patent US8090025 32
A. Overview 32
B. Prosecution History of the '025 Patent 37

VI. Summary of '025 Prior Art 37

A. Overview of Mualla (and Mualla and Stockhammer in Ground 1B) 37

B. Overview of Shirani 63

C. Overview of Saito 66

D. The combination of Mualla and Shirani (and the Combination of Mualla-Stockhammer and Shirani in Ground 1B) 69

E. The combination of Mualla, Shirani, and Saito (and the Combination of Mualla-Stockhammer-Shirani and Saito in Ground 1B) 72

VII. Ground 1A/1B – Claims 1-10 are Obvious under 35 U.S.C. § 103 based on Mualla, Shirani, and Saito (1A) and Mualla, Shirani, Saito, and Stockhammer 81

A. Analysis 81

1. "Moving picture decoding" claims 6-8, and 10; 82

2. "Moving picture coding" claims 1-5, 9 132

3. Remaining limitations of Claims 1, 4, and 9 136

VIII. Additional Remarks 137

I, Clifford Reader, Ph.D., do hereby declare:

1. I am making this declaration at the request of Samsung in the matter of *INTER PARTES* REVIEW OF U.S. PATENT NO. 8,090,025, "the '025 Patent."

2. I am being compensated for my work in this matter at my standard hourly rate of $750 for consulting services. My compensation in no way depends on the outcome of this proceeding or the content of my testimony.

3. In preparing this Declaration, I considered the following materials:

(a) U.S. Patent No. 8,090,025 ("the '025 Patent") (Exhibit SAMSUNG-1001)

(b) The Prosecution History of the '025 Patent (Exhibit SAMSUNG-1002)

(c) Al-Mualla, et al., "Video Coding for Mobile Communications: Efficiency, Complexity and Resilience," Elsevier, 2002 (Exhibit SAMSUNG-1005)

(d) S. Shirani, et al., "A Concealment Method for Video Communications in an Error-Prone Environment," in IEEE Journal on Selected Areas in Communications, vol. 18, no. 6, pp. 1122-1128, June 2000 (Exhibit SAMSUNG-1006)

(e) N. Saito, et al., "The Polyharmonic Local Sine Transform: A New Tool for Local Image Analysis and Synthesis without Edge Effect," Applied and Computational Harmonic Analysis, vol. 20, pp. 41-73, 2006 (Exhibit SAMSUNG-1007)

(f) B. Girod, et al., "Feedback-Based Error Control for Mobile Video Transmission," in Proceedings of the IEEE, vol. 87, no. 10, pp. 1707-1723, Oct. 1999 (Exhibit SAMSUNG-1008)

(g) T. Stockhammer, et al., "H.264/AVC in Wireless Environments," in IEEE Trans. on Circuits and Systems for Video Tech., vol. 13, no. 7, July 2003 (Exhibit SAMSUNG-1009)

(h) Perez, et al., "Poisson Image Editing," ACM, ACM Transactions on Graphics (TOG), vol. 22, Issue 3, Jul. 2003, pp. 313-318 (Exhibit SAMSUNG-1010)

(i) Wexler, et al., "Space-Time Video Completion," In Proc. IEEE Comput. Soc. Conf. Computer Vision and Pattern Recognition, 2004, pp. 120 –127 (Exhibit SAMSUNG-1011)

(j) Raskar, et al., "Image Fusion for Context Enhancement and Video Surrealism," Proceedings of the 3rd Symposium on Non-Photorealistic Animation and Rendering, 2004, pp. 85-152 (Exhibit SAMSUNG-1012)

(k) Sun, et al., "Poisson Matting," ACM Transactions on Graphics (Tog), Special Issue: Proceedings of the 2004 Siggraph Conference Session: Interacting With Images, vol. 23, Issue 3, 2004, pp. 315-321 (Exhibit SAMSUNG-1013)

(l) U.S. Patent No. 7,636,128 B2 to Sun, et al. (Sun-128) (Exhibit SAMSUNG-1014)

(m) Fattal, et al., "Gradient Domain High Dynamic Range Compression," In Proceedings of ACM SIGGRAPH, 2002, 249–256 (Exhibit SAMSUNG-1015)

(n) ITU-T Rec. H.263 (01/2005) ("the H.263 standard") (Exhibit SAMSUNG-1016)

(o) M. Wada, "Selective Recovery of Video Packet Loss Using Error Concealment," IEEE Journal on Selected Areas of Communication, vol. 7, pp. 807–814, June 1989 (Exhibit SAMSUNG-1017)

(p) ITU-T Rec. H.263 (02/1998) (Exhibit SAMSUNG-1021)

(q) List, et al., "Adaptive Deblocking Filter," IEEE Journal on Circuits and Systems for Video Technology, vol. 13, pp. 614-619, July 200 (Exhibit SAMSUNG-1022)

I. Professional Background

A. Summary

5. I am a digital media consultant providing technical, business development and intellectual property consulting services in the areas of digital media including digital imaging, digital video, digital audio and digital speech. Applications include consumer audio and video transmission and storage; video, audio and speech compression; real-time video processing and display; digital speech processing; image/video/audio systems architecture; and image/video/audio chip architecture. I have held this position since 2001 and have consulted for over 80 clients.

B. Education

6. I received my Doctoral degree in 1974 from the University of Sussex, England. My thesis was titled "Orthogonal Transform Coding of Still and Moving Pictures." The research for my thesis was performed in residence at the Image Processing Institute, University of Southern California, Los Angeles.

7. I received my B. Eng. Degree with Honors in 1970 from the University of Liverpool, England, in the field of electronics.

C. Work Experience

8. From 1970 to 1973 I performed my graduate research in video compression. I was one of the first to perform a type of image coding (adaptive block

transform coding) and the first to apply this type of coding to video. This is described in my thesis and summarized in an SPIE paper. SAMSUNG-1022. These techniques underlie the audiovisual coding standards known as MPEG (Moving Picture Experts Group), H.26x, and virtually all other video compression schemes today.

9. From 1975 to 1981 I studied, designed and developed systems for military imaging systems including real-time image and video reconnaissance systems and battlefield management systems.

10. In the early 1980s I taught classes at Santa Clara University, California in digital signal processing and digital image processing.

11. From 1982 to 1989 I architected and led hardware and software engineering teams in the design of systems for real-time imaging for military, medical and earth resources applications.

12. From 1990 to 2001 I architected and led hardware and software engineering teams in the design of semiconductor chips and systems for real-time imaging in digital consumer audio/video applications, including videoconferencing (with speech coding), broadcast TV and DVD.

D. Standardization

13. In 1990 I became an accredited delegate to the Moving Picture Experts Group – MPEG. I, and my team contributed to the technical work for all three parts

of the standard – Systems, Video and Audio – and I participated in the management of the MPEG committee.

14. I was Head of Delegation (HoD) to MPEG for the United States in 1991-1992, during which time the MPEG1 standard was completed and the MPEG2 standard was successfully positioned as the global standard for digital video broadcasting and recording (DVD). I was the Editor in Chief of the MPEG1 standard. I personally reviewed and edited all three parts of the standard in detail, and wrote much of the informative annex for the MPEG1 standard. I participated in the technical and management work for development of the MPEG2 standard.

15. I chaired the implementation subcommittee that analyzed MPEG1 Audio (Levels I & II aka MUSICAM; Level III aka mp3), Dolby AC3 and other proposed audio compression algorithms including legacy algorithms for complexity and cost of implementation.

16. I was a co-founder of the MPEG4 standard and chaired the subcommittee from inception for 2-1/2 years, beginning in 1993, following which I chaired the MPEG4 Requirements subcommittee for a further 2 years. These subcommittees established many of the fundamental principles of the MPEG4 standard, including object-based coding, software-based implementation, and development of the bitstream as a syntactic language. *E.g.* MPEG4 focused on audiovisual low bitrate coding, including low bitrate speech coding.

17. The MPEG4 standard in ISO and the H.263 standard in ITU-T were developed collaboratively, with the H.263 Rapporteur and I synchronizing meetings and establishing profiles in each standard that are precisely compatible.

18. I was instrumental in establishing the work on Advanced Audio Coding (AAC).

19. I initiated the work in Synthetic-Natural Hybrid Coding (SNHC), and personally contributed to the work on compression of 3D graphics in the area of error resilient coding.

20. In the early 2000s, I was an invited expert to the Joint Video Team (JVT) established by ISO and ITU to develop the H.264 standard (also denoted MPEG4 Pt. 10, AVC). I was also invited to become an officer of the China National Standards committee AVS, in which I chair the Intellectual Property Rights Subgroup.

21. I have closely followed the developments of the H.265 and H.266 standards.

E. Intellectual Property Rights

22. In 1993 I was hired by CableLabs to be the technical expert for establishing the MPEG Patent Pool (Now MPEGLA). In the course of creating a list of essential IP to practice the standard, I reviewed approximately 10,000 abstracts and 1,000 patents. This is summarized in a chapter of the MPEG book by Mitchell et al. SAMSUNG-1023.

23. Multiple companies have hire me to assist in developing portfolios of their standards-essential patents.

24. In 2002 I was hired by 10 companies to evaluate the standards essential patent environment for the nascent H.264 standard.

25. In 2003 I was hired to evaluate the standards essential patent environment for the nascent national China AVS standards.

26. In 2013 I was hired to evaluate the standards essential patent environment for the nascent AV1 standard.

27. In 2017 I was hired to evaluate the standards essential patent environment for the H.265/HEVC standard.

28. I am the Co-Director of the China AVS Patent Pool Administration. I lead the negotiations for sub-licensing of the AVS standards. In 2022 I played a leading role in the adoption of the AVS3 video standard by DVB.

29. I have performed expert consulting and expert witness work for patent holders and defendants in patent licensing negotiations and litigation.

F. Curriculum Vitae

30. Additional information concerning my professional publications and presentations in the field of digital video and cases in which I have served as an expert are set forth in my current Curriculum Vitae, a copy of which is attached as Exhibit A.

This Curriculum Vitae lists many publications authored or co-authored by me; and lists the cases in which I have testified via depositions and trials.

II. Digital Video Technologies

31. Below I describe the state of digital video coding as of the '025 Patent's earliest claimed priority date (April 17, 2006), and summarize the development of technologies underlying the features and methods recited in claims 1-2.

A. Analog Video

32. Like film, video comprises a rapid sequence of still images that the human vision system integrates into a perception of motion. The "moving images" are often called video frames and video pictures.

33. All-electronic television[1] was invented by Philo Farnsworth in the late 1920s. Farnsworth developed the technique of raster scanning images and produced cameras and CRTs (cathode ray tubes) that could synchronously acquire and reproduce moving images.

34. All-electronic television service was introduced by the BBC in England in November 1936. Broadcasting of television programs continued until interrupted by the Second World War. Television service began in the U.S. in July 1941. These services provided only black-and-white video until 1953, when the NTSC standard in

[1] Electro-mechanical television systems were also introduced.

the U.S. was revised to include color. Analog broadcasting continued in the U.S. for almost seventy years. Full-power analog television broadcasting ceased in 2009 under order from the FCC.

B. Digital Video

35. Digitization of analog signals in general was introduced in the late 1940s with the name "pulse code modulation" (PCM). Fundamental sampling theory showed that a bandwidth-limited analog signal could be sampled at twice the rate of the highest frequency in the band, and still be perfectly reconstructed from such samples. The sample amplitudes could be represented by the value of a number, *e.g.*, a decimal value or a binary value. In the case of image or video data, it has been widespread practice to represent this value by an unsigned 8-bit integer. Analog TV signals that scanned a video frame were digitized into two-dimensional arrays of digital picture elements, known as "pels" or "pixels." Digital video, like analog video (and film) comprises a rapid sequence of frames.

36. PCM was followed in 1952 by the invention at Bell Labs of differential pulse code modulation, (DPCM), which was immediately applied to video. Because the correlation between pixels in typical scenes was high, it was efficient to code the pixels by successively predicting each pixel from the preceding pixel or pixels. AT&T demonstrated its Picturephone in 1964 at the World's Fair. Subsequently, commercial Picturephone service was introduced in 1970, using DPCM coding.

37. Digital video was introduced in the professional television studio environment with the CCIR 601 standard that was developed in the early 1980s and published in 1982 (now known as the ITU-R BT.601 standard). The standard covered PCM data formats for the NTSC and PAL video standards and facilitated the development of modern production and post-production studios, involving non-linear editing, digital switchers, and mixers, as well as digital special effects.

38. Digital video in its raw format is highly redundant. Each video frame comprises a regular, rectangular array of pixels. The density of the pixel array is chosen such as to portray the highest spatial resolution enabled by a particular video system. Historically, the earliest systems portrayed 400-500 lines of resolution. The so-called HDTV systems introduced in the 1990s doubled the number of lines to 1000 lines, and the recent so-called 4K systems double the number of lines again to 2000 lines. The imminent next generation of so-called 8K systems will further double the number of lines to 4000 lines, which will approximate the resolution of a 35mm film system.

39. Historically the frame rate was 30 frames per second, but one of the HDTV formats doubled this to 60 frames per second.

40. Transmission or storage of raw digital video data requires huge volumes of data and very fast data rates. Transmitting standard definition color TV with a format of 720x486 pixels and 30 frames/s would require over 250Mbits/s. HDTV would

require approximately 5 times as much data and so-called 4K TV (UHDTV) at 60 frames/s would require approximately 40 times as much data.

41. Within a given scene being imaged by a video system, the content is very likely not to contain the highest level of detail except in a few, small areas. While a prescribed density of pixels may accurately describe such high detail areas, that density of pixels is overkill for the rest of the scene to a greater or lesser degree. So the typical digital video frame is spatially redundant. For example, if the video scene contains the sky, or a uniformly painted wall, adjacent pixels will have almost identical intensity and color.

42. The frame rate of the video is established to smoothly portray the fastest motion the system is designed to support. But such motion may occur only a fraction of the time, and may occur only over a portion of a frame spatially. So the typical video sequence of frames is temporally redundant. For example, sportscasters sitting at a desk demonstrate little motion over only a portion of the scene, but when they cut away to basketball, the action is frenetic and may be scene-wide. In the former case the pixel values will be almost identical from one frame to the next over most of the frame.

C. Video Coding

43. Video coding, also known as video compression is the art of removing the spatial and temporal redundancy to enable storage or transmission of digital video data with vastly fewer bits, while preserving the quality of the raw video data to the maximum

extent possible. Expressed another way, video coding is the art of representing the information in a video sequence with the least data (i.e., the fewest bits) and the highest reconstructed quality.

44. Video coding is not performed by a single algorithm, rather it comprises a set of video coding tools, each designed to tackle a particular aspect of reducing the redundancy of raw video data. Some video tools tackle the spatial redundancy, while other tools tackle the temporal redundancy. In each case, the tools attempt to identify and extract the visual information perceived by the human vision system. This information is then encoded into a video bitstream.

45. The fundamental research for video coding was performed in the 1960s and 1970s. By the end of the 1970s, a so-called hybrid architecture had been developed that remains today as the foundation for almost all video coding standards. Temporal redundancy is removed using block-based motion compensation. This is based on a model of motion in which objects within a scene generally do not change, but rather move from one location in the scene to another. On a block basis, this model works well. The following figures I assembled illustrate the point:

- **Model: Motion consists of translation in the viewing plane.**

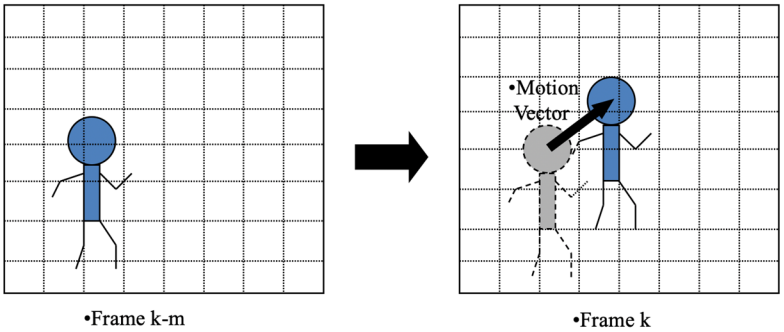

46. Thus for each block in a current frame, a search is made to find a best match to the block in a "reference" frame that has already been coded. The best-matched block is used as a prediction for the current block. The difference between the pixel values of the current block and the pixel values of the prediction block is called the residual data. The location of the best match block in the reference frame relative to the location of the current block is called a motion vector. The residual data block and the motion vector are coded, and typically comprise a small fraction of the amount of data needed to code the current block alone. The following figures I assembled illustrate the point:

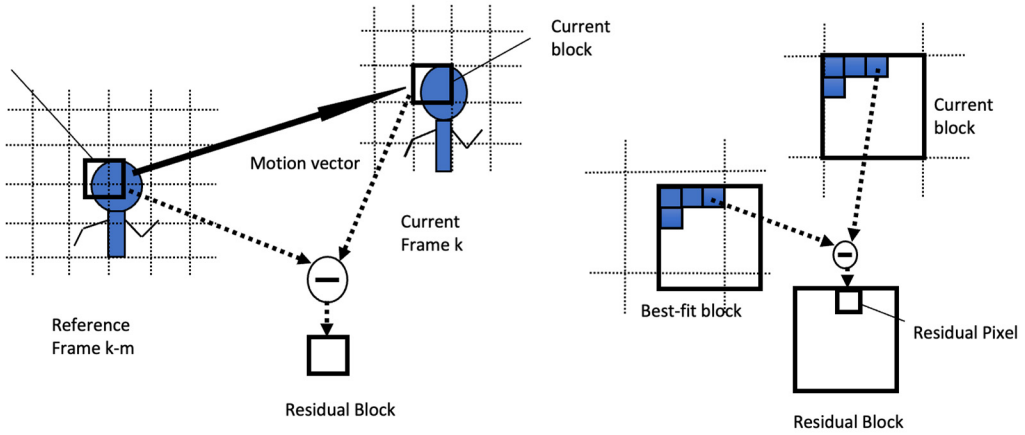

47. For blocks that cannot be temporally predicted efficiently, spatial prediction within the same frame is applied. In both cases the blocks of residual data may still contain spatial redundancy within the block. This redundancy is reduced using transform coding techniques.

48. The nature of video data is highly variable, both spatially and temporally. Some video sequences contain high levels of spatial detail. Such detail may span across the whole video frame or may be confined to local areas of the video frame. Some video sequences contain high degrees of movement that also may span across the whole video frame, such as when a camera is panning rapidly across a scene, or may be localized within the video frame. Video coding is performed in a highly adaptive way, by breaking each video frame into small blocks and adapting the spatial and temporal coding to the characteristics of the data on a local basis.

49. The temporal and spatial information is entropy coded to efficiently represent it and is then formatted into a bitstream.

50. The adaptive coding of video results in a highly variable instantaneous bitrate – it is obvious the volume of data produced when a ball is snapped in a football game is vastly higher than that produced during a time-out. As a result, the entropy coded bitstream at the encoder is buffered in order to smooth out at least some of the variation in data rate before transmission or storage and there is a corresponding buffer at the input to the decoder.

51. Video coding in particular has been characterized by the difficulty and cost involved in implementing coding algorithms for use in mass-market consumer applications. The volume of video data is very large, and the requirement for presenting video data that has been transmitted or retrieved from storage in real-time has been very challenging. As a consequence, while researchers in the field have conceived of sophisticated mathematical algorithms and procedures for video coding for decades, practical implementation has had to wait for semiconductor technology to pass certain thresholds.

D. Video Coding Standards

1. Background

52. Two international bodies are responsible for audiovisual standards – the ITU-T and ISO/IEC. Throughout the last three decades, these bodies have collaborated to develop generations of standards, most frequently publishing identical texts under their own standardization programs.

53. In general, the standardization process has followed the practice of beginning with a requirements gathering stage, leading to a call for proposals and evaluation stage, and then a development stage. In the development stage, the draft standard, and complementary reference software, are iterated from one meeting to the next. Owing to the highly variable nature of video data, the experts propose techniques to develop a particular coding tool and perform experiments using the reference software and selected test sequences to determine whether or not, and under what circumstances, a proposed technique improves the draft coding standard. Frequently, a technique brings improvement under specific, limited circumstances, so it is common practice for a tool to be switched on and off for local regions of the video sequence (spatially and/or temporally), or for parameters of a coding tool to be locally adjusted. In this sense, the development of a standard and attendant adoption of coding tools is an ad hoc process based upon empirical evidence.

54. The structure of standards for audiovisual coding has comprised an audio/speech coding part, video coding part, and a "systems" part. The audio/speech and video parts establish standards normatively specifying precise formats for coded bitstreams dedicated exclusively to audio/speech and video respectively. These may be called elementary bitstreams. For audiovisual applications such as broadcast television, these elementary bitstreams are combined into a single bitstream by the system part.

2. The MPEG1 Standards

55. The MPEG committee established requirements for the MPEG1 standard and called for proposals in 1989. Many of the resulting proposals were based on the preceding work for the H.261 videoconferencing standard, indeed, MPEG1 may be viewed as an extension of that standard. But for MPEG1, the requirements were focused on a digital replacement for the analog VCR, and included trick play modes such fast-forward, fast rewind and reverse play. Multiple responses to the call proposed groups of pictures as a mechanism to meet these requirements. During the ensuing development of the standard, the Group Of Pictures (GOP) data structure was defined.

> 2.1.71 group of pictures [video]: A series of one or more coded pictures intended to assist random access. The group of pictures is one of the layers in the coding syntax defined in this part of ISO/IEC 11172.

SAMSUNG-1015, 6.

The group of pictures must contain an I-picture, may contain P-pictures and B-pictures and can be any length greater than or equal to one I-picture. SAMSUNG-1015, 15-16. In MPEG1, the coding order and display order of the pictures of the GOP can be different from each other. *Id.*

56. The MPEG1 standard, which is incorporated by reference in this declaration in full, introduced a highly efficient method of temporal coding called bi-directional prediction. This was subsequently adopted by the MPEG2 standard. In this method, multiple video frames are buffered prior to encoding and the coded data for multiple frames are buffered before decoding. Temporal coding is used first to predict

and code the blocks in a future frame that typically may be two or three frames ahead in the sequence of buffered frames. This is called a "P-frame." Then the blocks in an intervening frame are coded by searching for matching blocks in a previous frame and a future frame. This is called a "B-frame." The corresponding pixel values in the best match blocks are averaged and the averaged block is used to predict the block in the intervening frame. The resultant residual block and the two corresponding motion vectors are coded.

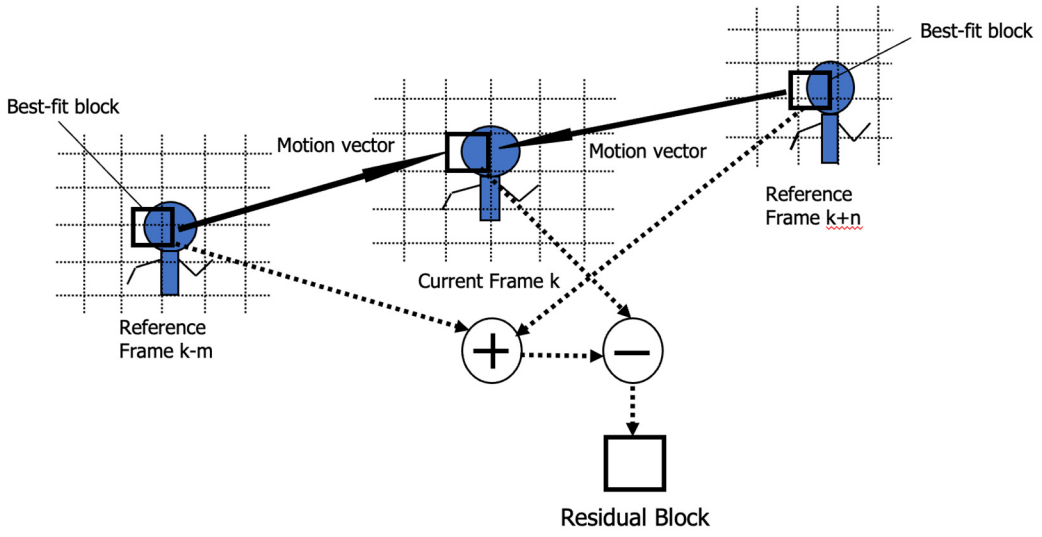

57. The prediction of P-frames by successive forward prediction and B-frames by prediction from adjacent I-frames and P-frames is illustrated in Figure D.2 of the MPEG1 Standard, shown below. It can be seen that intra-coded frame I2 is not predicted from another frame; P-frames P5, P8 and P11 are forward-predicted from I-frames or other P-frames, and pairs of frames I2, P5, P8 and P11 are used to predict the corresponding interstitial B-frames.

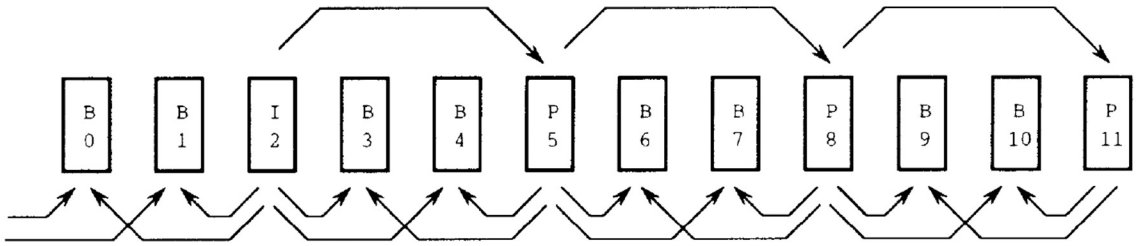

Figure D.2 -- Dependency relationship between I, B, and P-pictures

Figure D.2 illustrates a number of pictures in display order. The arrows show the dependency relationship of the predictive and bidirectionally predictive coded pictures.

SAMSUNG-1015, 54.

58. The number of interstitial B-frames is determined by an encoder and is application-specific. It has been found empirically that two B-frames is optimum for natural video sequences, typified by broadcast television and movies recorded on DVD. It is common practice to have a constant number of B-frames, as shown in the above figures.

59. The MPEG1 standard was technically completed in 1991, and published by the standards setting organization in 1993. *E.g.*, SAMSUNG-1015. By this time, GOP structure was well defined and understood.

3. The MPEG2 Standard

60. The MPEG committee established requirements for the MPEG2 standard and called for proposals in 1991. The requirements were focused first on digital television broadcasting and recording of standard definition video (*e.g.*, NTSC, PAL) at full resolution. As such, MPEG2 comprises an extension of MPEG1 to include coding

of interlaced video. The MPEG2 standard also includes optional coding tools for scalable video coding. *E.g.*, SAMSUNG-1028; SAMSUNG-1016.

61. The MPEG2 standard, officially ISO/IEC 13818-2, which is incorporated by reference in this declaration in full, was technically completed in 1994, and rapidly became massively successful in the global marketplace as the standard for digital television broadcasting and digital video recording – DVD. *E.g.*, SAMSUNG-1028, SAMSUNG-1016.

E. The H.263 Standard

62. H.263 is a standard developed by ITU-T for videoconferencing applications. The work commenced in 1993, leading to three versions of the standard in 1996, 1998 and 2001. The first version is an evolution of the earlier H.261 standard. The second version, which is incorporated by reference in this declaration in full, included a number of optional annexes that are relevant to the current matter. See, *e.g.*, SAMSUNG-1020.

For example, SAMSUNG-1021, Annex F Advanced Prediction Mode (incorporated by reference in full in this declaration) specifies overlapped block motion compensation – OBMC – in clause F.3:

> Each pixel in an 8 * 8 luminance prediction block is a weighted sum of three prediction values, divided by 8 (with rounding). In order to obtain the three prediction values, three motion vectors are used: the motion vector of the current luminance block, and two out of four "remote" vectors:

• the motion vector of the block at the left or right side of the current luminance block;
• the motion vector of the block above or below the current luminance block.

For each pixel, the remote motion vectors of the blocks at the two nearest block borders are used. This means that for the upper half of the block the motion vector corresponding to the block above the current block is used, while for the lower half of the block the motion vector corresponding to the block below the current block is used (see Figure F.3). Similarly, for the left half of the block the motion vector corresponding to the block at the left side of the current block is used, while for the right half of the block the motion vector corresponding to the block at the right side of the current block is used (see Figure F.4).

2	1	1	1	1	1	1	2
2	2	1	1	1	1	2	2
2	2	1	1	1	1	2	2
2	2	1	1	1	1	2	2
2	2	1	1	1	1	2	2
2	2	1	1	1	1	2	2
2	2	1	1	1	1	2	2
2	1	1	1	1	1	1	2

Figure F.4/H.263 – Weighting values, H_2, for prediction with motion vectors of the luminance blocks to the left or right of current luminance block

Recommendation H.263 (02/98) p. 65

63. SAMSUNG-1021, Annex J Deblocking Filter Mode (incorporated by reference in full in this declaration) specifies in clause J.3 a one-dimensional filter applied across horizontal and vertical block edges:

The filter operations are performed across 8 × 8 block edges at the encoder as well as on the decoder side. The reconstructed image data (the sum of the prediction and reconstructed prediction error) are clipped to the range of 0 to 255 as described in 6.3.2. Then the filtering is applied, which alters the picture that is to be stored in the picture store for future prediction. The filtering operations include an additional clipping to ensure that resulting

pixel values stay in the range 0...255. No filtering is performed across a picture edge, and when the Independent Segment Decoding mode is in use, no filtering is performed across slice edges when the Slice Structured mode is in use (see Annexes K and R) or across the top boundary of GOBs having GOB headers present when the Slice Structured mode is not in use (see Annex R). Chrominance as well as luminance data are filtered.

When the mode described in this annex is used together with the Improved PB-frames mode of Annex M, the backward prediction of the B-macroblock is based on the reconstructed P-macroblock (named PREC in G.5) after the clipping operation but before the deblocking edge filter operations. The forward prediction of the B-macroblock is based on the filtered version of the previous decoded picture (the same picture data that are used for prediction of the P-macroblock).

The deblocking filter operates using a set of four (clipped) pixel values on a horizontal or vertical line of the reconstructed picture, denoted as A, B, C and D, of which A and B belong to one block called block1 and C and D belong to a neighbouring block called block2 which is to the right of or below block1. Figure J.1 shows examples for the position of these pixels.

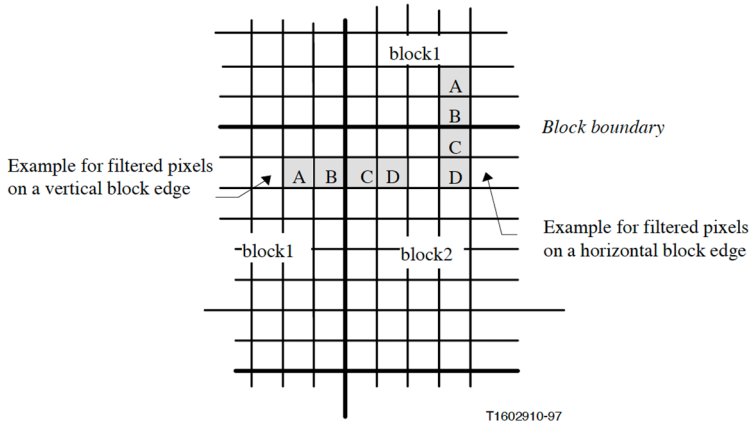

Figure J.1/H.263 – Examples of positions of filtered pixels

Recommendation H.263 (02/98) p. 81

64. SAMSUNG-1021, Annex N Reference Picture Selection mode (incorporated by reference in full in this declaration) specifies a mechanism for error recovery in which on a picture or subpicture basis, a decoder that experiences a loss of data may fill in the resultant "hole" in the picture. It may be able to fill in the hole by use of a different reference picture than one which is lost. While such a "patch" might not be perfect, it might subjectively conceal the error – which would be fleeting. Alternatively, it may signal the encoder to transmit the data needed to fill the hole.

F. The H.264 Standard

65. H.264 is a standard jointly developed by ITU-T for videoconferencing applications and ISO for consumer video applications. (The ISO designation is 14496-10, i.e., MPEG4 Part 10 also known as AVC – Advanced Video Codec, SAMSUNG-1027.) The work commenced in 1998 in the ITU-T workgroup VCEG (Video Coding Experts Group), with MPEG joining in December 2001 to form the Joint Video Team – JVT. The first version was published in May 2003. Scalable Video Coding (SVC) was included from version 3 in November 2007 (ITU-T Rec. H.264 (11/2007), SAMSUNG-1009, which is incorporated by reference in this declaration in full.

66. H.264/AVC provides a significant improvement in video coding performance over MPEG2 and is still the most widely used video coding standard worldwide. Notably it is used for High Definition Television broadcasting (HDTV).

67. For example, clause 8.7 Deblocking Filter Process (which is incorporated in this declaration in full) discloses a one-dimensional filter applied across horizontal and vertical block edges that is a significant advance over the H.263 deblocking filter:

> A conditional filtering shall be applied to all 4x4 block edges of a picture, except edges at the boundary of the picture and any edges for which the deblocking filter process is disabled by disable_deblocking_filter_idc, as specified below. This filtering process shall be performed on a macroblock basis, with all macroblocks in a picture processed in order of increasing macroblock addresses. Prior to the operation of the deblocking filter process for each macroblock, the deblocked samples of the macroblock or macroblock pair above (if any) and the macroblock or macroblock pair to the left (if any) of the current macroblock shall be available. The deblocking filter process is invoked for the luma and chroma components separately. For each macroblock, vertical edges are filtered first, from left to right, and then horizontal edges are filtered from top to bottom. The luma deblocking filter process is performed on four 16-sample edges and the deblocking filter process for each chroma components is performed on two 8-sample edges, for the horizontal direction as shown on the left side of Figure 8 9 and for the vertical direction as shown on the right side of Figure 8 9. Sample values above and to the left of the current macroblock that may have already been modified by the deblocking filter process operation on previous macroblocks shall be used as input to the deblocking filter process on the current macroblock and may be further modified during the filtering of the current macroblock. Sample values modified during filtering of vertical edges are used as input for the filtering of the horizontal edges for the same macroblock.

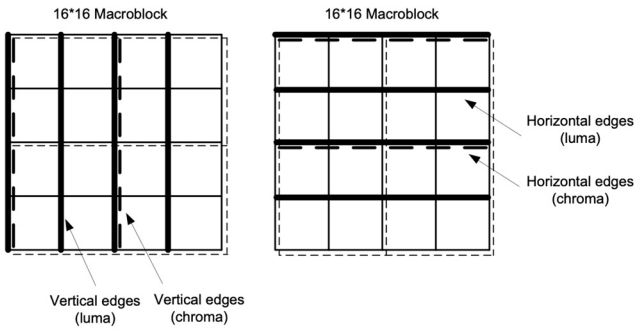

Figure 8-9 – Boundaries in a macroblock to be filtered (luma boundaries shown with solid lines and chroma boundaries shown with dashed lines)

ITU T Rec. H.264 (05/2003) – Prepublished version p. 156

68. A complete description can be found in List P, Joch A, Lainema J, Bjøntegaard G, Karczewicz M, Adaptive deblocking filter, IEEE Trans. on CSVT, vol. 13, pp. 614–619, July 2003, which is incorporated in this declaration by reference in full.

III. Relevant Legal Standards

69. I have been asked to provide my opinions as to whether claims 1-10 of the '025 Patent would have been obvious to a person of ordinary skill in the art as of the earliest claimed priority date of the '025 patent (April 17, 2006) ("Critical Date").

70. I am an engineer by training and profession. The opinions I express in this declaration involve the application of my technical knowledge and experience to the evaluation of certain prior art with respect to the '025 Patent. In addition, I understand that the following legal principles apply.

71. It is my understanding that, in determining whether claims of the '025 patent are obvious in this proceeding, the claim terms are generally given their ordinary and customary meaning as understood by a person of ordinary skill in the relevant art.

A person of ordinary skill in the art would read the claim terms in the context of the entire patent specification in which they appear, as well as the prosecution history of the patent.

72. It is my understanding that a claim is unpatentable under 35 U.S.C. § 103 if the claimed subject matter as a whole would have been obvious to a person of ordinary skill in the art at the time of the alleged invention. I also understand that an obviousness analysis takes into account the scope and content of the prior art, the differences between the claimed subject matter and the prior art, and the level of ordinary skill in the art at the time of the invention.

73. In determining the scope and content of the prior art, it is my understanding that a reference is considered relevant prior art if it falls within the field of the inventor's endeavor. In addition, a reference is prior art if it is reasonably pertinent to the particular problem with which the inventor was involved. A reference is reasonably pertinent if it logically would have commended itself to an inventor's attention in considering his problem. If a reference relates to the same problem as the claimed invention, that supports use of the reference as prior art in an obviousness analysis.

74. To assess the differences between prior art and the claimed subject matter, it is my understanding that 35 U.S.C. § 103 requires the claimed invention to be considered as a whole. This "as a whole" assessment involves showing that one of

ordinary skill in the art at the time of invention, confronted by the same problems as the inventor and with no knowledge of the claimed invention, would have selected the elements from the prior art and combined them in the claimed manner.

75. It is my further understanding that several rationales may be applied for combining references or modifying a reference to show obviousness of claimed subject matter. These rationales include: combining prior art elements according to known methods to yield predictable results; simple substitution of one known element for another to obtain predictable results; a predictable use of prior art elements according to their established functions; applying a known technique to a known device (method or product) ready for improvement to yield predictable results; choosing from a finite number of identified, predictable solutions, with a reasonable expectation of success; and some teaching, suggestion, or motivation in the prior art that would have led one of ordinary skill to modify a prior art reference or to combine prior art teachings to arrive at the claimed invention.

IV. Person of Ordinary Skill in the Art

76. It is my understanding that when interpreting the claims of the '025 patent I must do so based on the perspective of one of ordinary skill in the art at the time of the alleged invention ("POSITA"). For purposes of my analysis in this declaration, I have taken the earliest claimed priority date of the '025 patent (April 17, 2006) as the date of the alleged invention ("Critical Date"). I understand that the factors considered

in determining the ordinary level of skill in a field of art include the level of education and experience of persons working in the field; the types of problems encountered in the field; the teachings of the prior art, and the sophistication of the technology at the time of the alleged invention. I understand that a POSITA is not a specific real individual, but rather is a hypothetical individual having the qualities reflected by the factors above. I understand that a POSITA would also have knowledge from the teachings of the prior art, including the art cited below.

77. Taking these factors into consideration, it is my opinion that one of ordinary skill in the art in the field of digital video coding as of the Critical Date, would have had at least a bachelor's degree in computer science, computer engineering, electrical engineering, or a related field, and at least two years of industry experience in digital video processing, or a related field. Additional graduate education could substitute for professional experience, or additional professional experience could substitute for formal education.

78. I have possessed the qualifications of a POSITA since the Critical Date of the '025 patent, and long before.

V. Overview of the Subject Patent US8090025

A. Overview

79. The '025 Patent is directed to "a moving-picture coding apparatus, method and program, and a moving-picture decoding apparatus, method and program

that, without a smoothing procedure, can produce a predictive picture maintaining continuity of a video signal." SAMSUNG-1001, 2:30-38. In addition to known video coding and decoding techniques, the '025 Patent discloses a "controller" (117a and 313a) and a "switch" (102/103 and 701) for selecting between "ordinary" motion estimation/compensation and "zone-border" motion estimation/compensation." SAMSUNG-1001, 25:21-42, 26:24-48, 28:21-39, FIGS. 5 (showing an encoder) and 7 (showing a decoder). The '025 Patent discloses that these two modes of motion compensation are "adaptively switched based on the data amount, thus producing high-quality decoded videos with a fewer code amount overall." SAMSUNG-1001, 28:21-39.

80. The "ordinary" motion estimation/compensation is performed by a "motion estimator" (502) and a "motion compensator" (503 and 702) which the '025 Patent describes in detail in its FIG. 13 description (produced below). SAMSUNG-1001, 10:4-39, 21:63-22:14, 28:21-39, FIGS. 5, 7, 13.

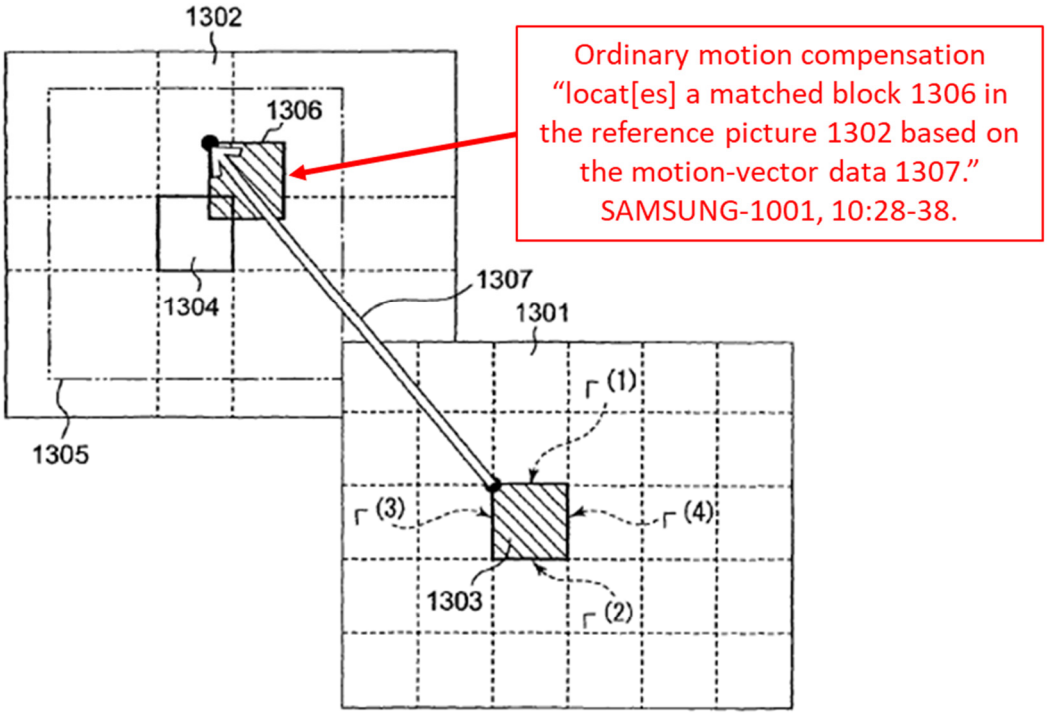

FIG. 13

SAMSUNG-1001, FIG. 13 (annotated).

81. The "zone-border" motion estimation/compensation includes two steps, described in FIGS. 14-17. SAMSUNG-1001, 10:39-12:20. In the first step, as shown in FIGS. 14 and 15, "motion-vector search is performed on block borders." SAMSUNG-1001, 10:39-45. Block borders are associated with a "boundary condition" which is "a gradient of a video signal on a block border." SAMSUNG-1001, 10:46-56. The zone-border motion estimator then "obtains border gradient data that is a boundary condition of a block border in a picture to be coded" and then selects the "closest gradient to the gradient of an original signal on the block border."

SAMSUNG-1001, 10:57-65, FIGS. 14-15. This process is shown below in FIGS. 14-15. Next, in the second step as shown in FIGS. 16 and 17, "Poisson's Equation is then applied based on the gradient data of the video signal thus defined to generate a predictive signal in block which is then applied to a predictive block 1606a." SAMSUNG-1001, 11:20-34.

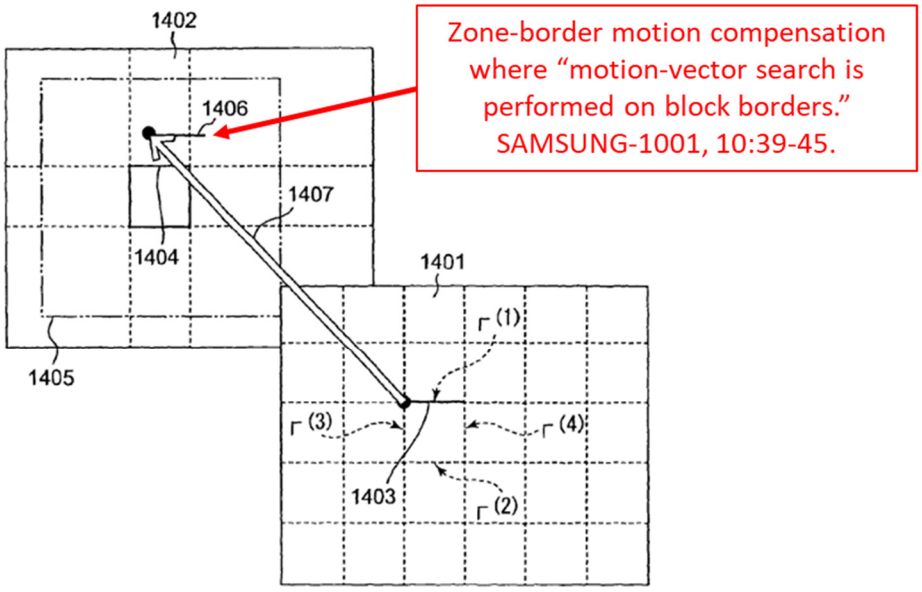

FIG. 14

SAMSUNG-1001, FIG. 14 (annotated).

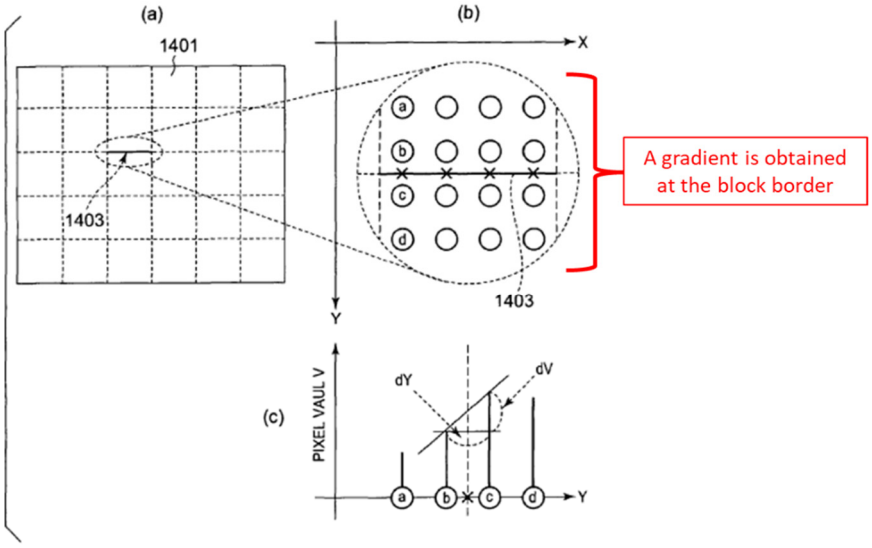

FIG. 15

SAMSUNG-1001, FIG. 15 (annotated).

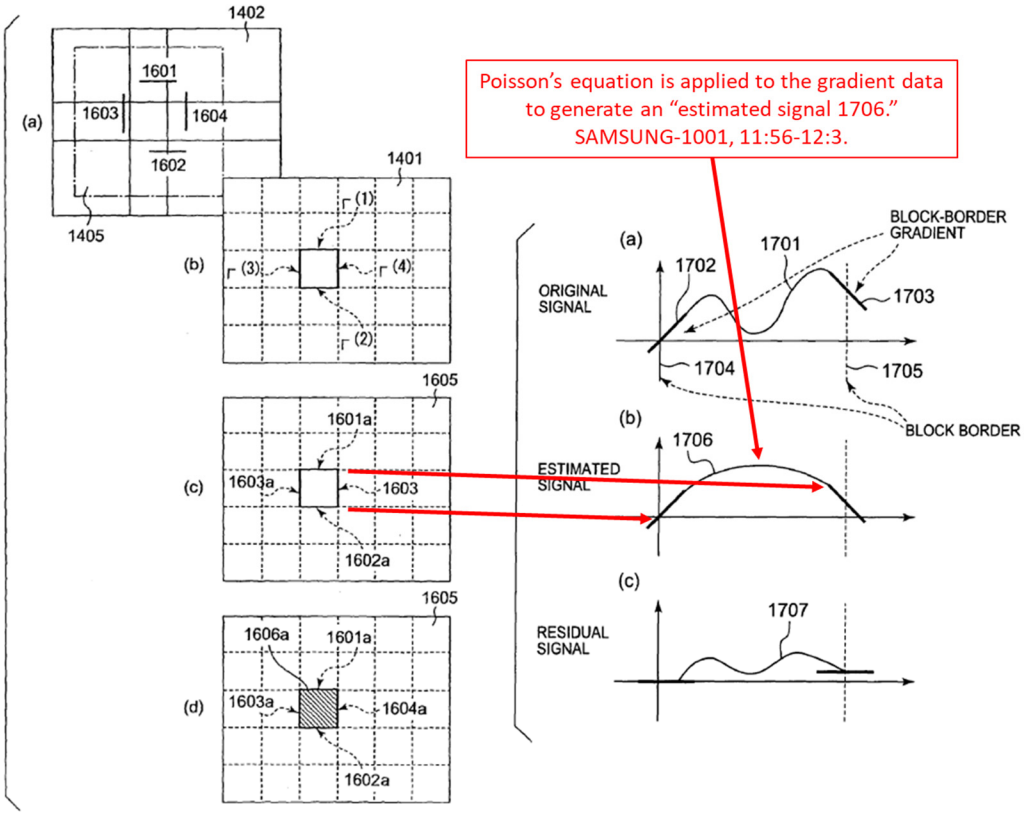

FIG. 16 FIG. 17

SAMSUNG 1001, FIGS. 16-17 (annotated).

B. Prosecution History of the '025 Patent

82. Application Serial No. 11/787,623 ("the '025 application") that issued as the '025 Patent was filed on April 17, 2007, claiming priority to Japanese Application Nos. 2007-093162 and 2006-112995 filed on March 30, 2007, and April 17, 2006, respectively. SAMSUNG-1001, Cover. On September 28, 2011, without issuing any previous prior art rejections, the Examiner issued a notice of allowability and an Examiner's amendment. SAMSUNG-1002, 34-52. The Applicant paid the issue fee on November 30, 2011. SAMSUNG-1002, 23-27. The '025 application issued as the '025 Patent on January 3, 2012. SAMSUNG-1001, Cover. In sum, the examiner allowed the application over prior art references that are substantially different from those relied upon in this petition. Indeed, during prosecution, there is no indication that the examiner considered Mualla, Shirani, Saito, or Stockhammer, which render the challenged claims obvious, as discussed below. *See generally*, SAMSUNG-1002.

VI. Summary of '025 Prior Art

83. The following pieces of prior art render obvious the alleged invention of the '025 patent in the combinations addressed further below (Grounds 1A/1B).

A. Overview of Mualla (and Mualla and Stockhammer in Ground 1B)

84. Mualla is a treatise on "fundamentals and standards of video source coding" and addresses "areas of coding efficiency, computational complexity, and error

resilience in a single volume." SAMSUNG-1005, 9-10. Structurally, Chapters 1 and 2 of Mualla provide "an introduction to video coding" by describing "some of the fundmentals of video source coding." SAMSUNG-1005, 10, 31-64. Chapter 3 of Mualla provides a "brief introduction to video coding standards" such as "H.263 (and its extensions H.263+ and H.263++)." SAMSUNG-1005, 10, 65-111. Chapters 4 and 7 of Mualla provide details of "motion estimation (ME)" and "motion compensation (MC)." SAMSUNG-1005, 10-11, 115-146, 181-195. Chapters 9 and 10 of Mualla describe techniques for "error reslience" in video coding systems. SAMSUNG-1005, 11, 225-279.

85. Given its comprehensive nature, Mualla presents different details of encoders/decoders in different figures, depending on what is being explained, but these figures are substantively cumulative to an overall teaching of video coding systems. To facilitate understanding, aggregated views of the relation between different figures of Mualla are shown in Diagrams A and B, below.

86. Diagram A (below) illustrates the relation between Figures 9.1 and 2.3 of Mualla. In Figure 9.1 (annotated in yellow, below) Mualla provides an illustration of a "typical video communication system." SAMSUNG-1005, Figure 9.1, 227-228. The system includes a "source encoder" designed to "compress the input video" (annotated in blue, below). SAMSUNG-1005, Figure 9.1, 228. The source encoder of Figure 9.1 "consists of a *waveform encoder* and an *entropy encoder*" (annotated in orange and red,

respectively, in Figure 9.1, below). SAMSUNG-1005, 228. Further details of the source encoder (annotated in blue) of Figure 9.1 are shown in Figure 2.3, With reference to Figure 2.3, Mualla explains that the waveform encoder of Figure 9.1 "corresponds to the *mapper* and *quantizer* blocks" of Figure 2.3 (annotated in orange, below), whereas "the entropy encoder" of Figure 9.1 "corresponds to the *symbol encoder* block" of Figure 2.3 (annotated in red, below). SAMSUNG-1005, Figures 9.1, 2.3, 228.

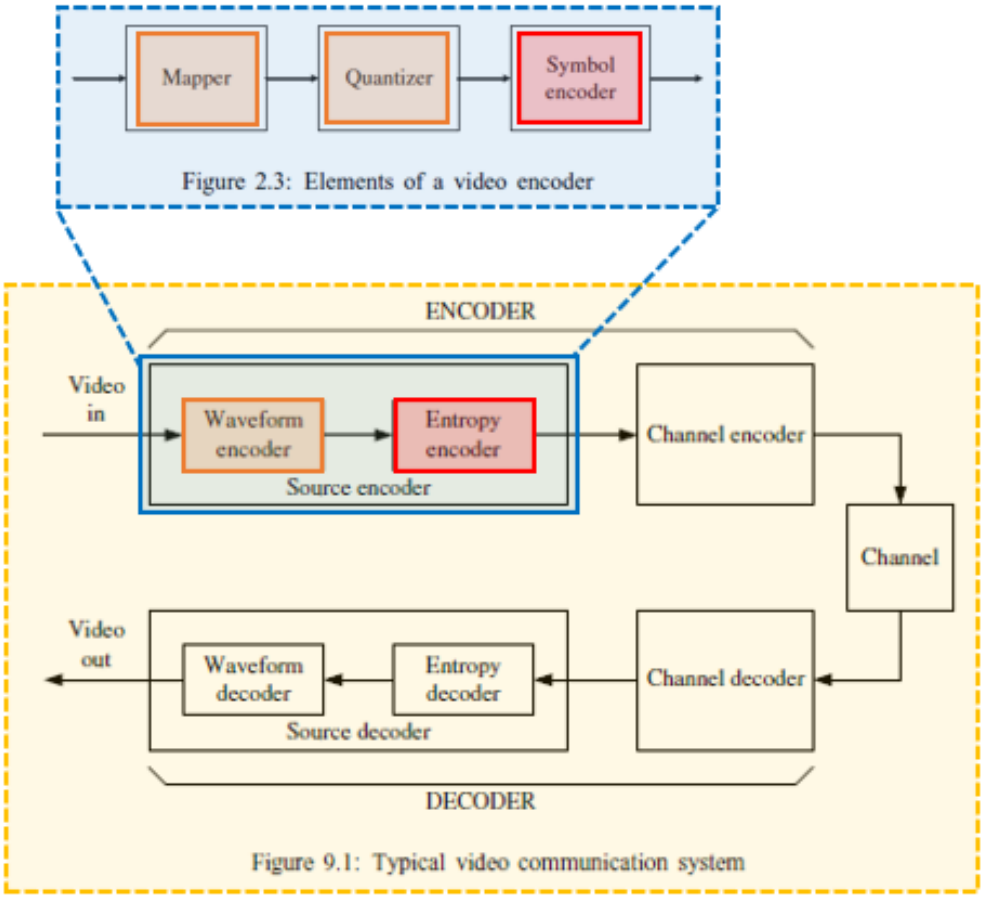

Diagram A (showing the relation between Mualla's Figures 9.1 and 2.3).

87. Mualla explains that the "mapper" in Figure 2.3 "is designed to reduce **statistical redundancy** and make the data more amenable to compression in later

stages." SAMSUNG-1005, 40. Mualla describes two types of statistical redundancy, namely "**spatial** (*intraframe*) and **temporal** (*interframe*) correlations between neighboring pels." *Id.*

88. Mualla discloses that **spatial** (intraframe) redundancy is reduced by "intraframe coding" which can be implemented by "**transform coding**." SAMSUNG-1005, 50-51. Mualla also discloses that **temporal** (interframe) redundancy can be reduced by "interframe coding" which can be implemented by "**motion estimation (ME)**" and "**motion compensation (MC)**." SAMSUNG-1005, 60-61. Mualla provides further details of these techniques in Figures 1.1 and 2.9, described next.

89. Diagram B (below) illustrates the relation between Figure 2.3 (annotated in blue in Diagram A, above) and Figures 1.1 and 2.9 of Mualla. In particular, Figure 2.9 discloses details of transform coding (to reduce spatial redundancy) while Figure 1.1 discloses details of motion estimation and motion compensation (to reduce temporal redundancy). Beginning with Figure 1.1, Mualla describes a "typical video codec" which includes a "motion estimation (ME) block" (annotated in purple, below) and a "motion compensation (MC) block" (annotated in purple, below, which is included as part of a local "decoder" implemented at the encoder) which are designed to reduce temporal redundancy. SAMSUNG-1005, 26. Figure 1.1 also illustrates a "transform encoder" block (annotated in green, below). SAMSUNG-1005, Figure 1.1. Further details of the "transform encoder" are provided in Figure 2.9 (annotated in green, below), which

includes a "forward transform" (annotated in purple, below) designed "to decorrelate the pels of the input block" (reduce spatial redundancy). SAMSUNG-1005, 51-52.

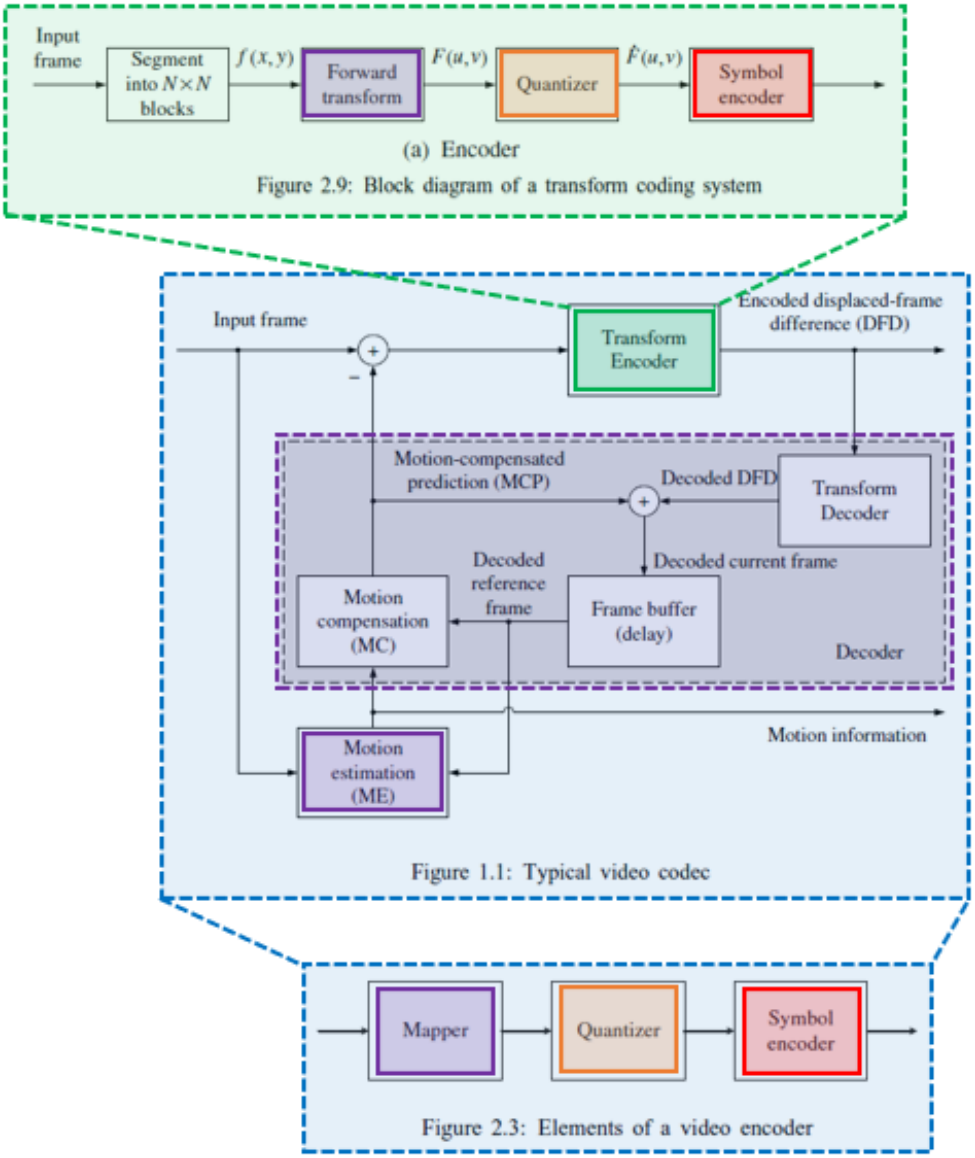

Diagram B (showing the relation between Mualla's Figures 2.3, 1.1, and 2.9).

90. With this background of typical video coding systems, Mualla describes the specific "picture coding structure" of the "H.263 standard." SAMSUNG-1005, 71-73. Mualla explains that "[t]he input video consists of a sequence of pictures (or

frames)" and "[e]ach picture is divided into *groups of blocks* (GOBs)" where "[e]ach GOB is divided into *macroblocks* (MBs)" and each MB "consists of 16×16 samples of Y'" (which Mualla refers to as 16x16 pixel elements or "pels" as shown in Figure 3.2). SAMSUNG-1005, 71. Mualla's Figure 3.2 illustrates the H.263 picture structure for a QCIF picture frame (reproduced below).

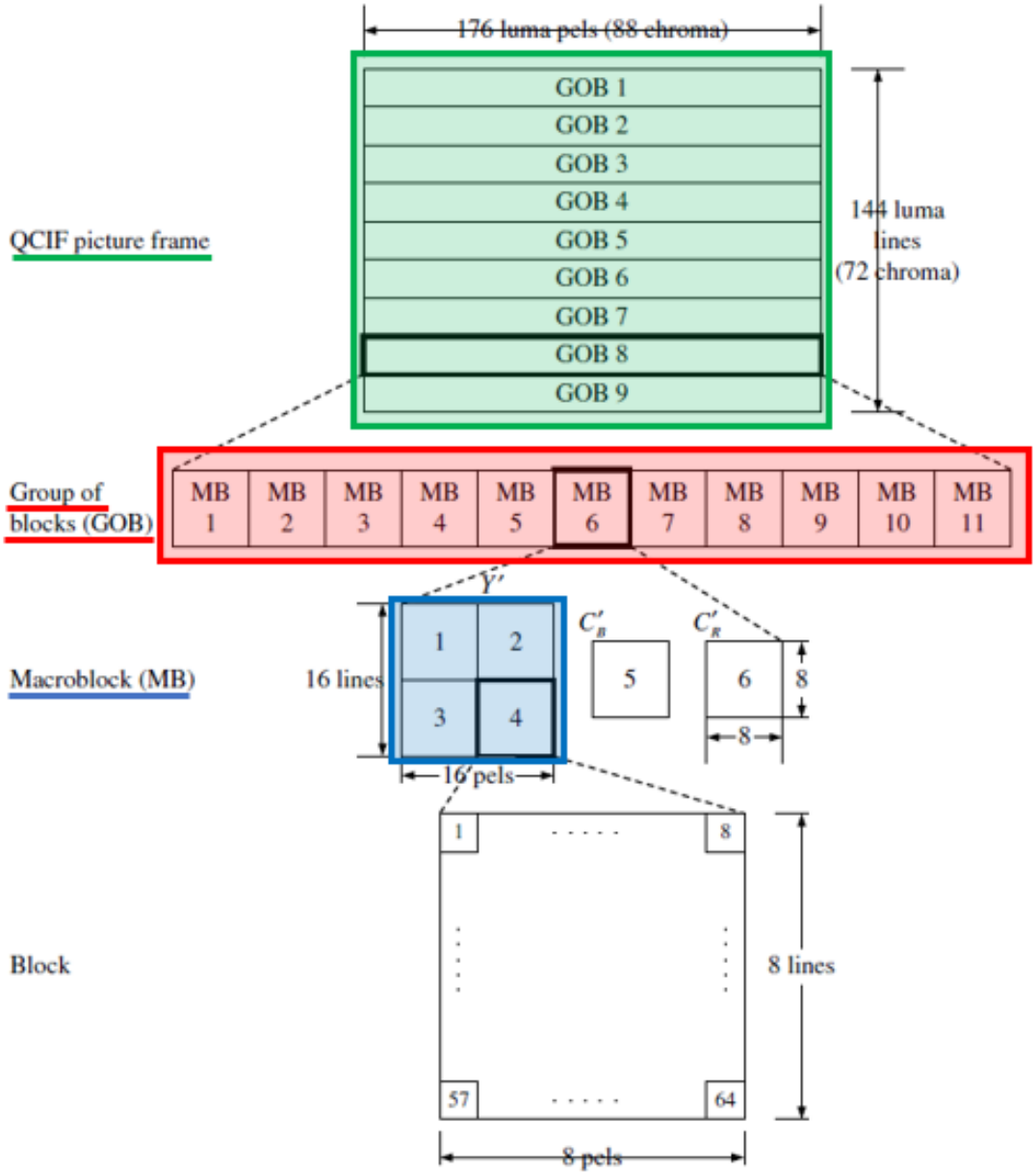

Figure 3.2: H.263 picture structure for a QCIF frame

SAMSUNG-1005, Figure 3.2 (annotated and color added).

91. When the input video is encoded, Mualla explains that in each picture frame, "GOBs are coded from top to bottom in increasing number" and "[w]ithin each GOB, the MBs are coded from left to right (and from top to bottom if the GOB

contains more than one row of MBs) in increasing number." SAMSUNG-1005, 71, Figure 3.2.

92. Referring back to Figure 1.1 (reproduced below), in order to encode an "input frame" of video (also referred to as the "current frame"), Mualla discloses that the encoder: (i) uses "motion estimation (ME)" and "motion compensation (MC)" to generate "a prediction of the current frame" (SAMSUNG-1005, 26, Figure 1.1), and (ii) subtracts the "prediction" of the current frame from the current frame "to produce an error signal known as the displaced-frame difference (DFD)" which is then encoded using the "transform encoder" (SAMSUNG-1005, 26-27, Figure 1.1).

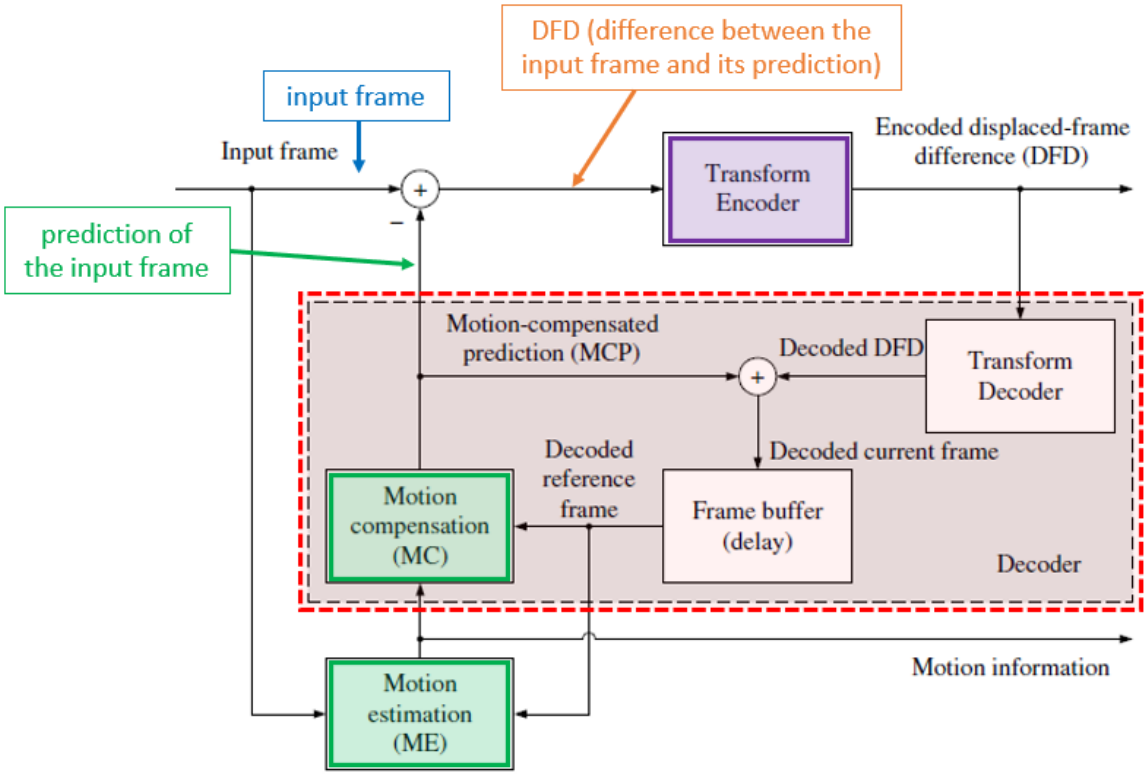

Figure 1.1: Typical video codec

SAMSUNG-1005, Figure 1.1 (annotated and color added)

93. Mualla provides further details of these two operations, which are summarized below.

(i) Generating the "prediction" of the current frame

94. As shown in Figure 1.1 (reproduced again below), for a given input frame (annotated in blue, below, also referred to as the "current frame"), Mualla describes generating the "prediction" of the current frame (annotated in green) by using a "motion compensation (MC) block" (annotated in green) which uses "motion information" estimated by a "motion estimation (ME) block" (also annotated in green). SAMSUNG-1005, 26, *see also* 61, Figure 1.1.

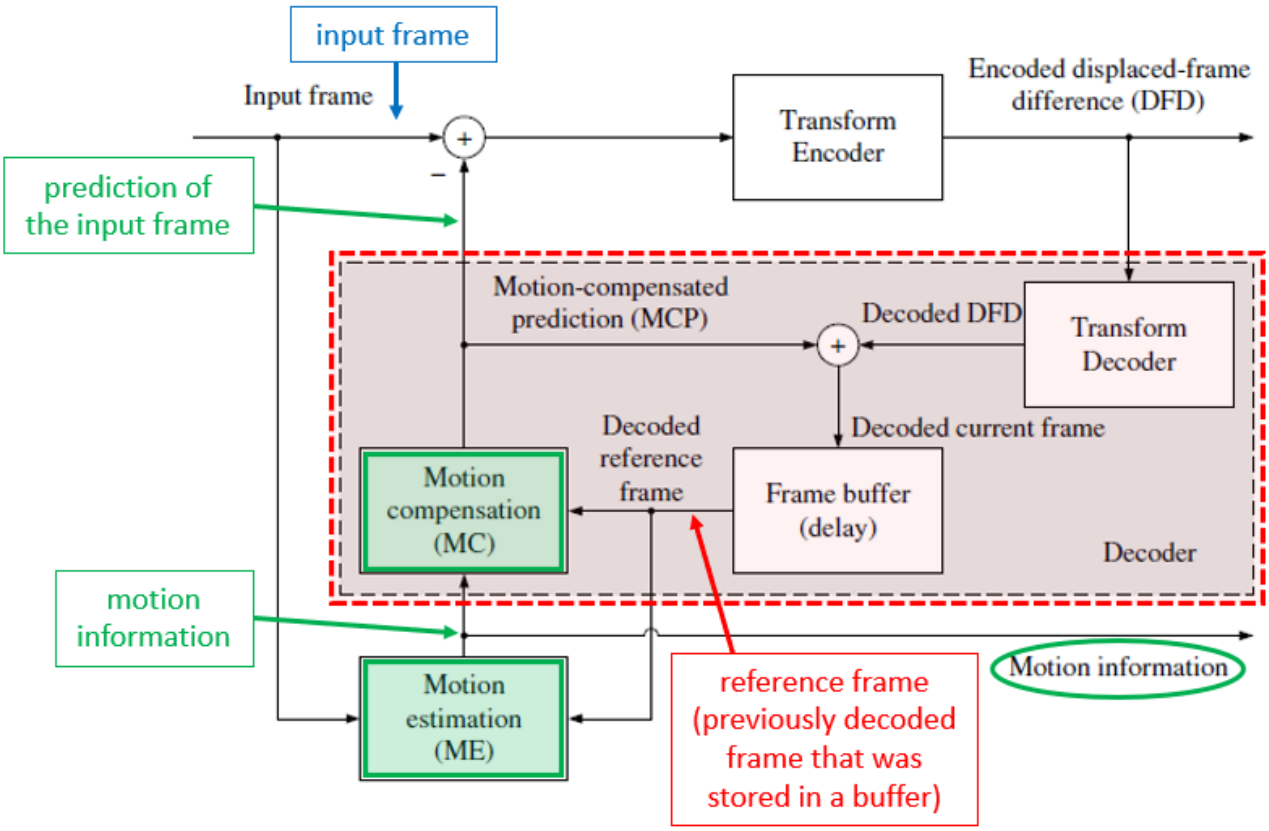

Figure 1.1: Typical video codec

SAMSUNG-1005, Figure 1.1 (annotated and color added)

95. The encoder's "motion estimation (ME) block" produces "motion information" which is an estimate of "the movement that occurred between the current frame and a reference frame (usually a previously decoded frame that was stored in a frame buffer)" (annotated in red in Figure 1.1, above). SAMSUNG-1005, 26, *see also* 61. Mualla explains that "[t]he most commonly used ME method is the block-matching motion estimation (BMME) algorithm" in which the "motion of each block" is estimated "by searching for the best-match block in the reference frame." SAMSUNG-1005, 62. The motion of the current block is then "represented by a motion vector,

which is the displacement between the block and its best-match block in the reference frame." *Id.* Mualla provides an example of motion estimation in Figure 2.16 (reproduced below). Mualla further explains that the BMME technique is supported by the H.263 standard, in which "the encoder estimates one motion vector per MB [(macroblock)]." SAMSUNG-1005, 73-74.

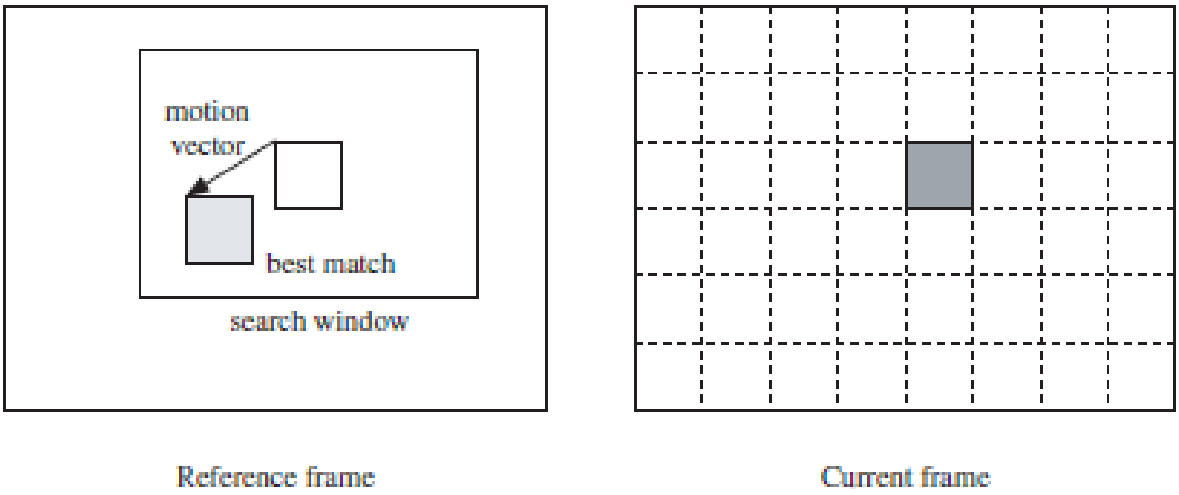

Figure 2.16: Block-matching motion estimation

SAMSUNG-1006, Figure 2.16.

96. Once the motion estimation (ME) process has estimated a motion vector, the encoder then performs "motion compensation (MC)" in which the motion information is utilized "to move the contents of the reference frame to provide a better prediction of the current frame." SAMSUNG-1005, 61. Mualla refers to the resulting prediction (annotated in green in Figure 1.1, above) as the "the motion-compensated prediction (MCP) or the displaced-frame (DF)." *Id.*

97. As shown in Figure 1.1 (above), the video encoder implements motion compensation (MC) by using a local "decoder" (annotated in red, below) that locally decodes a frame, stores the decoded frame in the local frame buffer, and generates the prediction of the current frame based on the previously decoded and stored frame. SAMSUNG-1005, 4, Figure 1.1. Thus, the "decoder" shown in Figure 1.1 is a local decoder that is implemented in the encoder, which replicates decoding operations implemented at a remote decoder in the receiver.

98. In addition to supplying the estimated motion vector to the motion compensation (MC) block, the motion vector is also encoded and output from the encoder (see the "motion information" circled in the lower-right-hand corner of Figure 1.1, above). SAMSUNG-1005, Figure 1.1. In particular, in the H.263 standard, Mualla explains that for each macroblock, "[t]he estimated motion vector MV = (MVx, MVy) is predictively coded" which means that "the motion vector difference MVD = MV – MVP is encoded instead of the motion vector itself." SAMSUNG-1005, 74. The "MVP" is defined as the "motion vector predictor" which is "the median of three candidate predictors, which are the motion vectors of three surrounding macroblocks." SAMSUNG-1005, 74, Figure 3.3(a). The motion vector difference (MVD) is then "entropy coded" and the encoded MVD is output from the encoder as encoded motion information. SAMSUNG-1005, 74.

(ii) Encoding the DFD

99. Once a prediction of the current frame has been generated in step (i) using ME and MC, as described above, Mualla explains that "the prediction is then subtracted from the current frame to produce an error signal known as the displaced-frame difference (DFD)" (annotated in orange, below) which is then encoded using a "transform encoder" to produce an "encoded ... DFD" (annotated in purple, below) which is output from the encoder. SAMSUNG-1005, Figure 1.1 (reproduced again below).

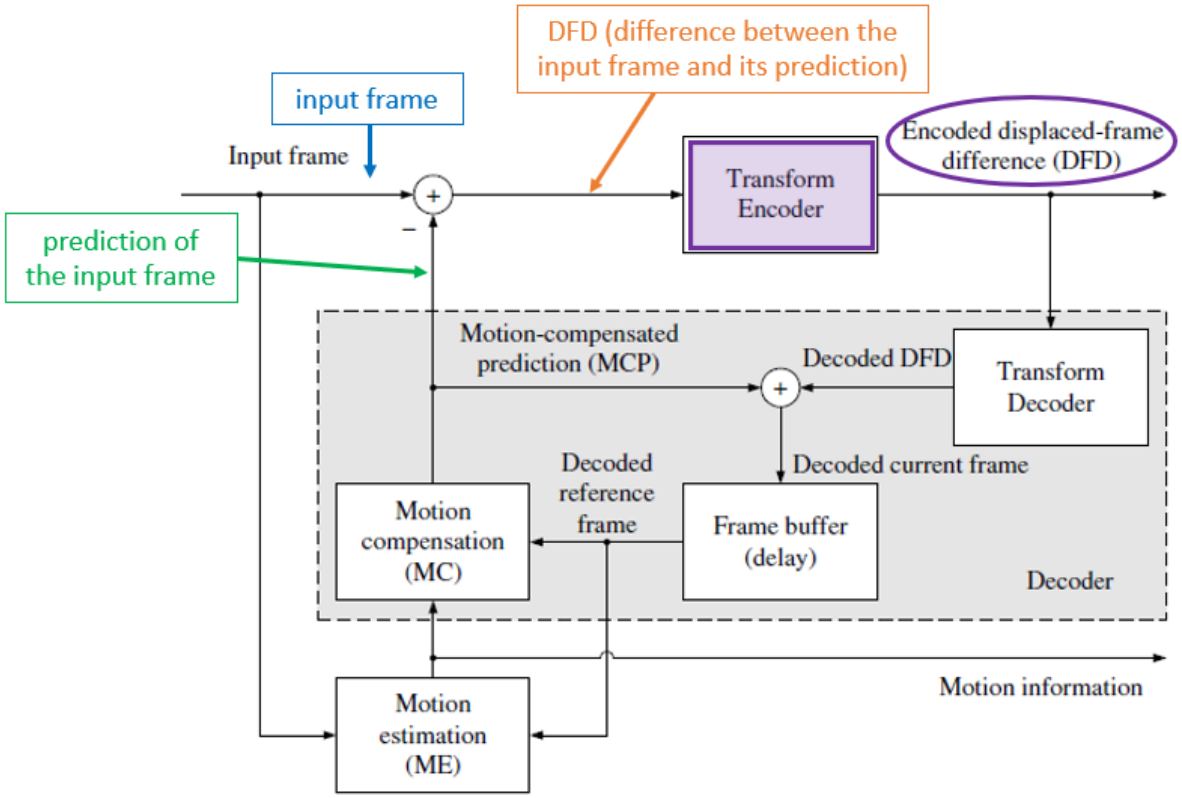

Figure 1.1: Typical video codec

SAMSUNG-1005, Figure 1.1 (annotated and color added).

100. Mualla describes details of the "transform encoder" (annotated in purple, above) in Figure 2.9 (reproduced below), in which "the input frame is first **segmented** into $N \times N$ blocks" (annotated in orange, below), and then "a unitary16 space-frequency **transform** [(annotated in green, below)] is applied to each block to produce an $N \times N$ block of transform (spectral) coefficients that are then suitably **quantized** [(annotated in blue, below)] and and **coded** [(annotated in red, below)]." SAMSUNG-1005, 51-52.

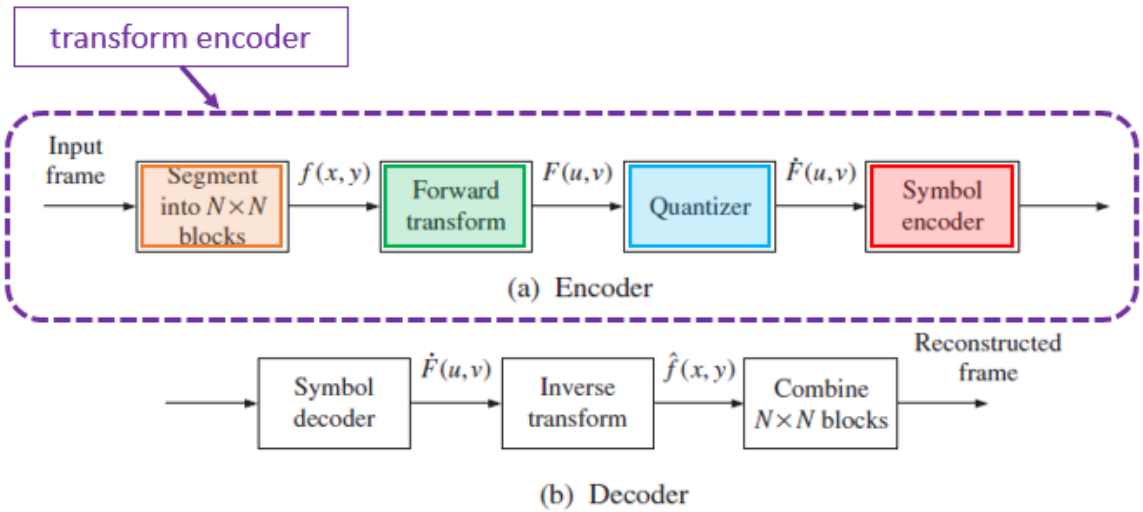

Figure 2.9: Block diagram of a transform coding system

SAMSUNG-1005, Figure 2.9 (annotated and color added).

101. Thus, Mualla discloses that the encoder outputs both the encoded DFD (circled in purple in Figure 1.1, above) and the encoded motion information (circled in green in Figure 1.1, above). SAMSUNG-1005, 26, 52, Figure 1.1.

102. Referring back to Figure 9.1, Mualla explains that "[a]t the decoder, the reverse operations are performed to obtain the output video." SAMSUNG-1005, 228. Figure 9.1.

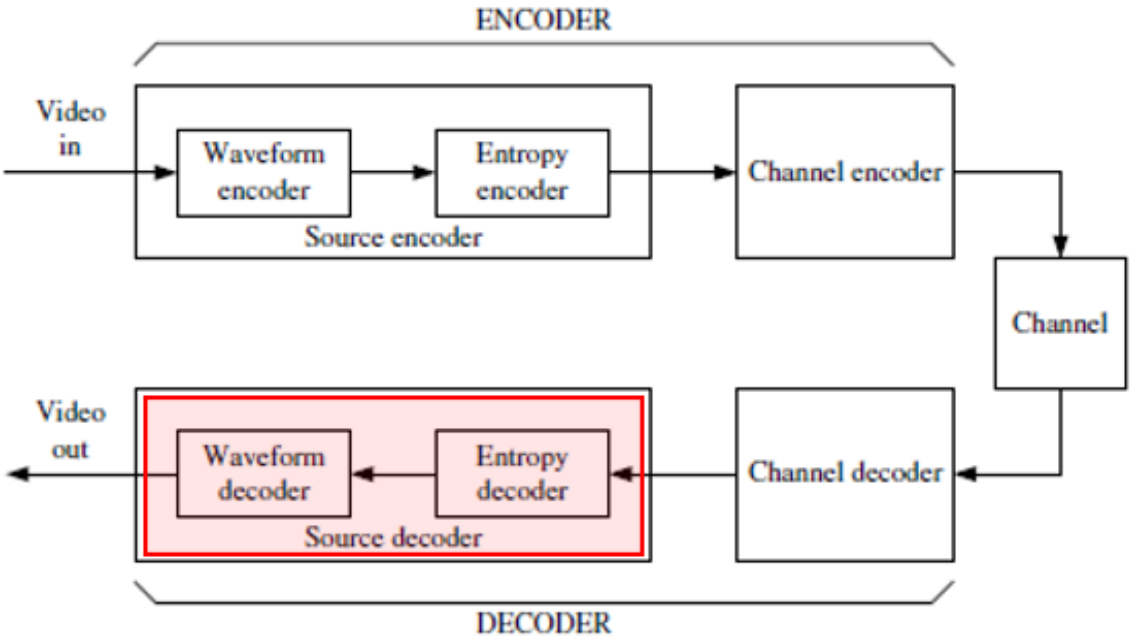

Figure 9.1: Typical video communication system

SAMSUNG-1005, Figure 9.1 (color added).

103. In the specific context of an H.263 system, Mualla discloses that these reverse operations are performed by a "decoding process" that includes (i) "motion vector decoding" in which "for each transmitted inter MB, the decoder calculates the same motion vector predictor MVP used at the encoder and adds it to the decoded motion vector difference MVD to obtain the decoded motion vector MV," (ii) "motion compensation" in which "[t]he decoded motion vector is used to compensate" the macroblock, (iii) "inverse quantization" for "reconstructing an approximation of the original coeffcient," (iv) "inverse transform" in which "[t[he reconstructed block of coefficients is processed by a separable 2-D 8x8 inverse DCT," and (v) "reconstruction

of blocks" in which "the reconstructed block is formed by summing the motion-compensated prediction and the result of the inverse DCT." SAMSUNG-1005, 76.

Error Resilience Techniques

104. In addition to the conventional video coding and decoding operations discussed above, Mualla further describes, in Chapters 9 and 10, techniques for "error resilience" in video coding, including "error detection and error control techniques" applicable to the H.263 standard. SAMSUNG-1005, 11, 227-251. Mualla explains that "when transmitted over a mobile channel, compressed video can suffer severe degradation and the use of error-resilience techniques is vital." SAMSUNG-1005, 25. In particular, Mualla explains that "[w]hen transmitted over a mobile channel, video can be affected by a number of loss mechanisms, like multipath fading, shadowing, and co-channel interference." SAMSUNG-1005, 205. Furthermore, "the higher the compression, the more sensitive the bitstream is to errors, since in this case each bit represents a larger amount of decoded video." SAMSUNG-1005, 227. Therefore, in addition to the compression techniques described above, Mualla also discloses modifying the decoder (and encoder) to implement techniques for detecting and recovering from errors that occur during transmission of the compressed bitsream.

105. To implement error resilience, Mualla describes a system in which "[t]he decoder was modified to perform error detection by detecting syntax and semantic violations." SAMSUNG-1005, 265. Mualla explains that"[w]hen an error is detected,

the decoding process is stopped" and "[a]ll macroblocks between the point where the error was detected and the synchronization point are marked as damaged macroblocks." *Id.* Mualla discloses recovering the damaged macroblocks by using an error control technique called "hybrid error concealment" which combines both "spatial techniques" and "temporal techniques" (examples of which are presented in Figures 9.7 and 9.8, reproduced below). SAMSUNG-1005, 242-246. In this hybrid technique, "temporal concealment is first used to get an initial estimate of the damaged block" and "this initial estimate is then refined using spatial concealment." SAMSUNG-1005, 246.

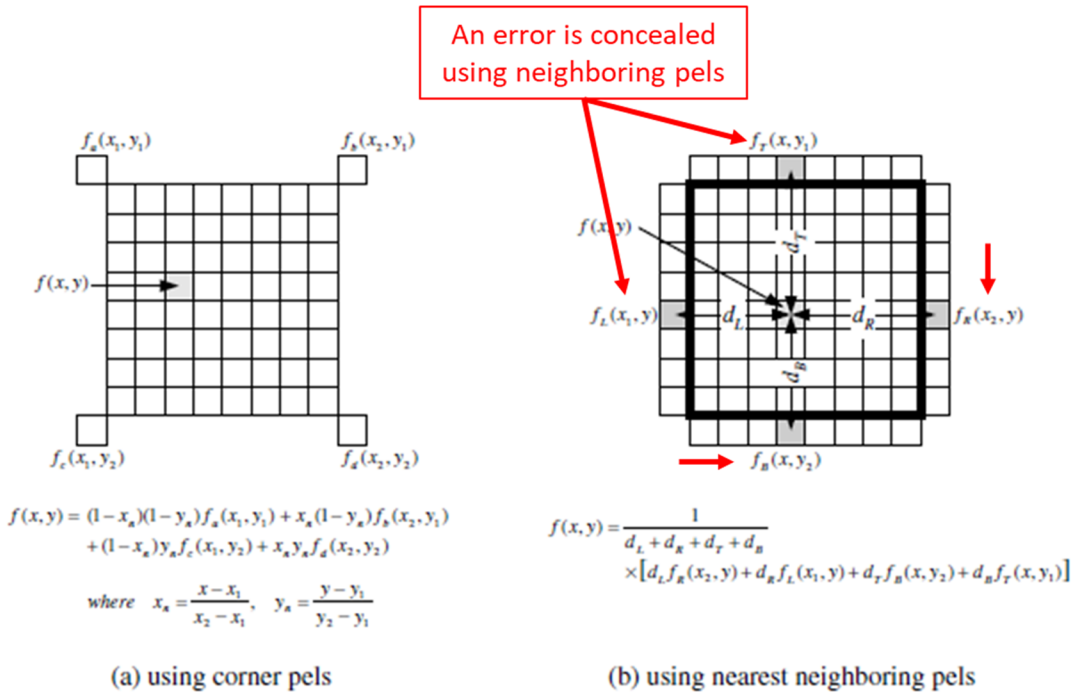

Figure 9.7: Error concealment using spatial interpolation

SAMSUNG-1005, FIG. 9.7 (annotated).

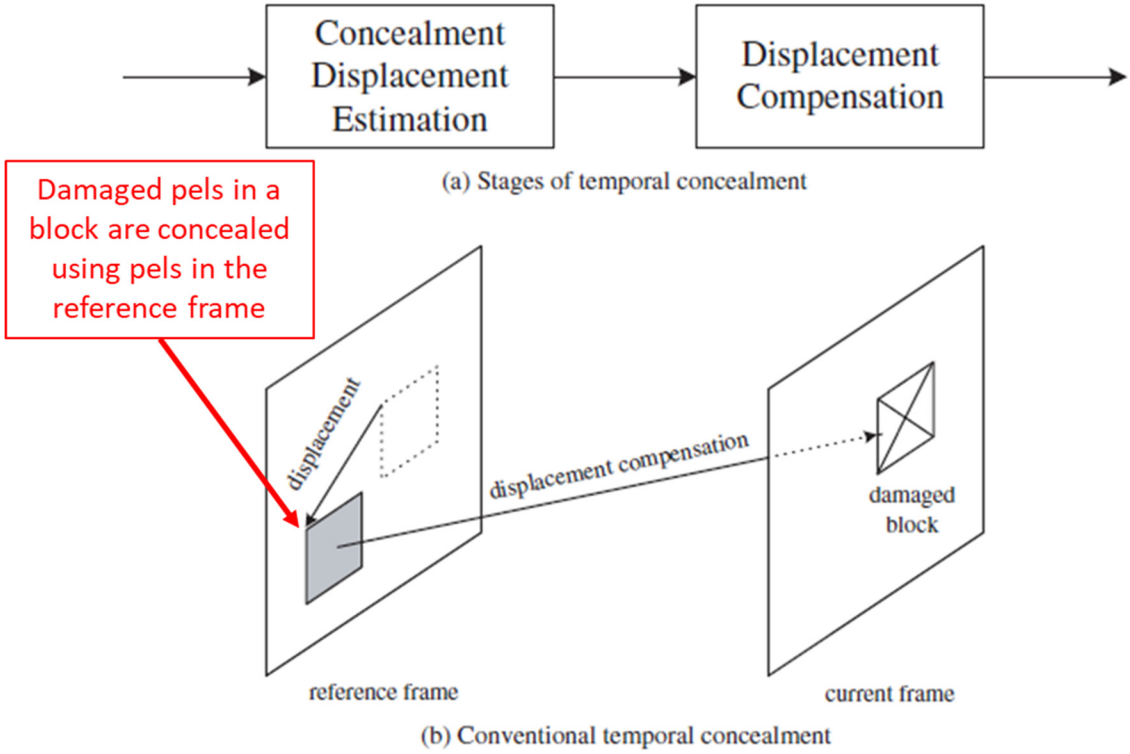

Figure 9.8: Temporal error concealment

SAMSUNG-1005, FIG. 9.8 (annotated).

106. Furthermore, although Mualla describes details of error resilience (including *error detection* to detect errors and subsequent *error concealment* to recover from those errors) at the decoder, Mualla also teaches performing *error concealment* at the **encoder**. SAMSUNG-1005, 246-250. For example, Mualla discloses that "the encoder and decoder cooperate to minimize the effects of transmission errors" and in particular "coding efficiency can also be improved by performing error concealment in the encoder so that both encoder and decoder use the same reference frames for prediction." SAMSUNG-1005, 249. To implement error concealment at the encoder, Mualla describes "interactive techniques" in which "the decoder uses a feedback

channel to inform the encoder about which parts of the transmitted video have been received in error" and "[b]ased on this feedback information, the encoder adjusts its operation to combat the effects of such errors." SAMSUNG-1005, 224. Mualla explains that "[w]hen feedback information is received, the encoder can reconstruct the error propagation process" so that "the encoder can track the error propagation." SAMSUNG-1005, 247.

107. In describing such interactive techniques, Mualla cites to numerous corroborating references that teach additional details of implementing "interactive" error concealment where the same error concealment technique is performed at both the **encoder and decoder**. SAMSUNG-1005, 246-250. For example, Girod (SAMSUNG-1008, cited as reference 201 in Mualla) teaches "error tracking" techniques for H.263-based systems in which the decoder performs "reporting of the temporal and spatial location of MB's that could not be decoded successfully and had to be concealed" and "[b]ased on the information of an NACK, the encoder can reconstruct the resulting error distribution in the current frame." SAMSUNG-1008, 7. Girod explains that, in order to perform error tracking, "the coder has to know the decoder's concealment technique" and that error tracking "does not require any modifications of the bit stream syntax of the motion-compensated hybrid coder" and "is therefore fully compatible with standards such as ... H.263." SAMSUNG-1008, 9. As another example, Wada (SAMSUNG-1017, cited as reference 203 in Mualla and also cited as

reference 50 in Girod) teaches both a "procedure at the receiver" and "a procedure at the transmitter" for error resilience. SAMSUNG-1017, 1-2. At the **receiver**, Wada teaches that (1) "Packet loss is detected," (2) "Damaged picture block(s) is (are) specified," (3) "Notice of packet loss with the address(es) of damaged picture block(s) is sent back to the transmitter," (4) "Error concealment is carried out over damaged picture block(s)," and then (5) "Decoding is continued." *Id.* At the **transmitter**, Wada describes a method in which (1) "Notice of packet loss is received with the address(es) of damaged picture block(s)," (2) "The **same error concealment as is performed at the receiver is carried out in the local-decoded frame stored**," (3) "Local decoding is reexecuted from the point of the concealed block(s) up to the currently encoded block," and then (4) "Encoding is normally continued." SAMSUNG-1017, 2.

108. Therefore, in view of the teachings of Mualla (and the references cited by Mualla which reflect knowledge in the art at the time of Mualla's teachings), a POSITA would have understood or found obvious that (i) an H.263-based **decoder** performs *error detection* to detect errors and *error concealment* to recover from those errors, and (ii) an H.263-based **encoder** receives feedback from the decoder regarding errors that were detected, and performs the same *error concealment* to replicate those same errors in its local decoder so as to use the same reference frames for error prediction.

109. Furthermore, Stockhammer (SAMSUNG-1009, which cites both Girod and Wada as references 62 and 63, respectively, for teachings of error tracking in H.263

systems) provides illustrative diagrams for implementing feedback-based error detection and error correction in an H.264-based system. SAMSUNG-1009, 8, Fig. 6 (reproduced below). In particular, Fig. 6 of Stockhammer illustrates an encoder (on the left-hand side, annotated in blue) that implements a local "decoder" (annotated in red) to perform "video encoding" to generate "packets." *Id.* The packets are transmitted over a "packet loss channel" in which packets are randomly lost during transmission. *Id.* At the remote decoder (on the right-hand side, annotated in red), Stockhammer explains that "[t]he decoder processes the received sequence of packets" such that "received packets are decoded as usual" whereas "for the lost packet, an error-concealment algorithm has to be invoked." SAMSUNG-1009, 8.

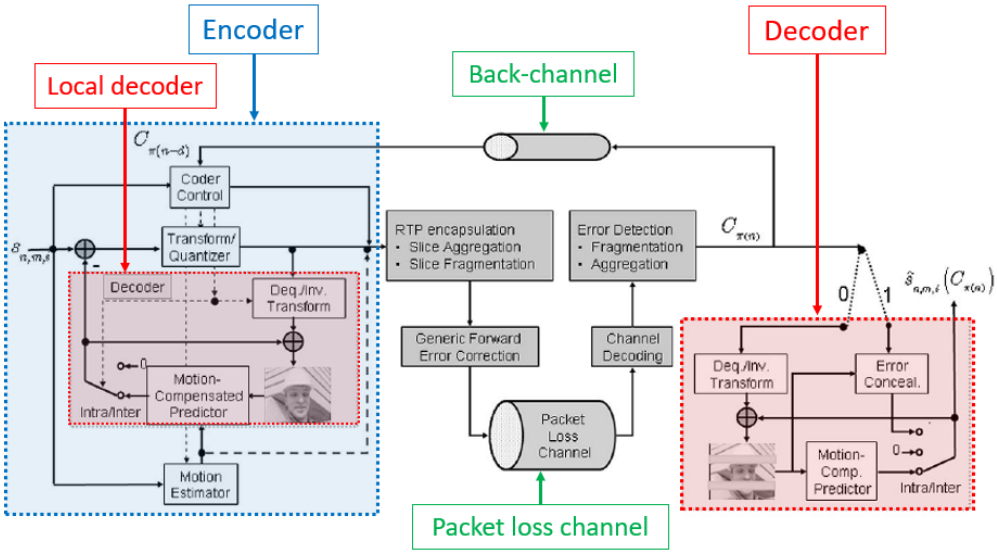

Fig. 6. H.264/AVC in IP-based packet-lossy environment with RTP encapsulation, generic forward error correction, delayed feedback information, and error concealment.

SAMSUNG-1009, FIG. 6 (annotated and color added).

110. Stockhammer also illustrates, in Fig. 6 above, and describes that a "back-channel from the decoder to the encoder is available [((shown in the upper part of Fig.

6))] which allows reporting ... of the observed channel behavior at the decoder to the encoder." *Id.* Stockhammer provides further details of error resilience utilizing such "feedback" from the decoder to encoder, and specifically cites to Girod and Wada (as references 62 and 63, respectively) for teachings of "a simple yet powerful approach suitable for video codecs ... such as MPEG-2, H.261, or H.263 ... under the name *error tracking*." SAMSUNG-1009, 11.

111. To the extent the implementation details of Stockhammer were not already understood to a POSITA with knowledge of error concealment techniques (e.g., from reviewing the disclosures of Mualla and Shirani), a POSITA reviewing the teachings of Stockhammer would have also been motivated to combine these same implementation details into the teachings of Mualla (e.g., thus creating the Mualla-Shirani-Saito-Stockhammer combination of Ground 1B). SAMSUNG-1009, 8-11. Indeed, although the techniques of Stockhammer were well understood, a POSITA would have naturally searched for specific implementation examples (e.g., Stockhammer's FIG. 6 above) to refine the broader disclosure of Mualla.

112. To summarize, Mualla provides a self-contained teaching of video coding systems, including the concept of feedback-based error tracking in which **(i)** an H.263-based **decoder** performs *error detection* to detect errors and *error concealment* to recover from those errors, and **(ii)** an H.263-based **encoder** receives feedback from the decoder regarding errors that were detected, and performs the same *error concealment* to

replicate those same errors in its local decoder so as to use the same reference frames for error prediction. In particular, Mualla refers to (i) as a "post-processing" technique and refers to (ii) as an "interactive" technique, and Mualla explains that a "combination" of these two techniques can be employed in practical systems. SAMSUNG-1005, 251 ("It should be emphasized that the three categories of techniques are not mutually exclusive, and different combinations can be employed in practical systems").

113. These teachings of Mualla are corroborated by Girod and Wada (both of which are cited in Mualla) and Stockhammer (which also cites to Girod and Wada) which provide additional details and diagrams for the same concepts disclosed in Mualla.

114. Therefore, in view of the teachings of Mualla (as corroborated by Girod, Wada, and Stockhammer), a POSITA would have understood or found obvious that feedback-based error resilience at both the encoder and decoder can be implemented by a system such as the one shown in Diagram C, below. SAMSUNG-1009, Fig. 6. In this diagram, Figure 6 of Stockhammer has been modified to show how error concealment would be implemented at the encoder, based on the teachings of Mualla. SAMSUNG-1009, Fig. 6. In particular, the modified portions of Stockhammer's Fig. 6 are annotated and shaded in red in Diagram C. SAMSUNG-1009, Fig. 6. As shown, the modification simply amounts to replacing the encoder's local "decoder" with an

analogous error concealment structure-enabled as already implemented in the remote decoder. SAMSUNG-1009, Fig. 6.

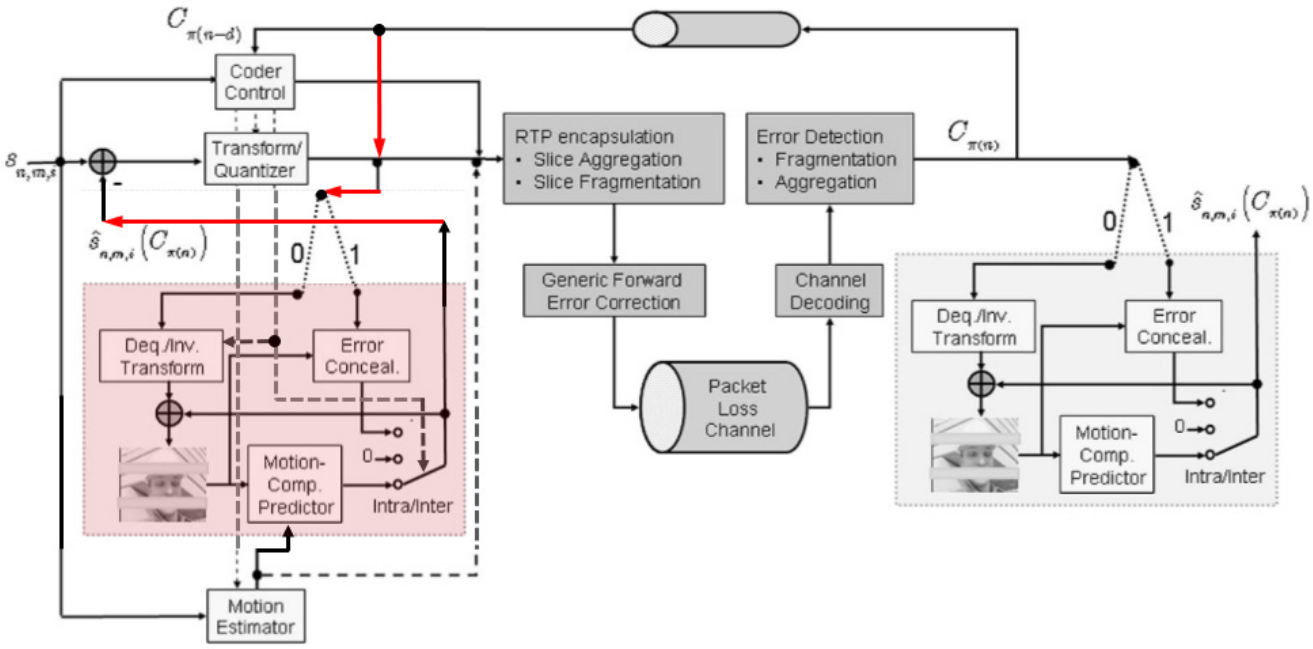

Diagram C (showing a video coding system with interactive error concealment).

115. Diagram D, below, illustrates a detailed view of the modified encoder of Diagram C. SAMSUNG-1009, Fig. 6. As discussed previously, the modified encoder implements a local decoder (shaded in red) that performs error concealment. SAMSUNG-1009, Fig. 6.

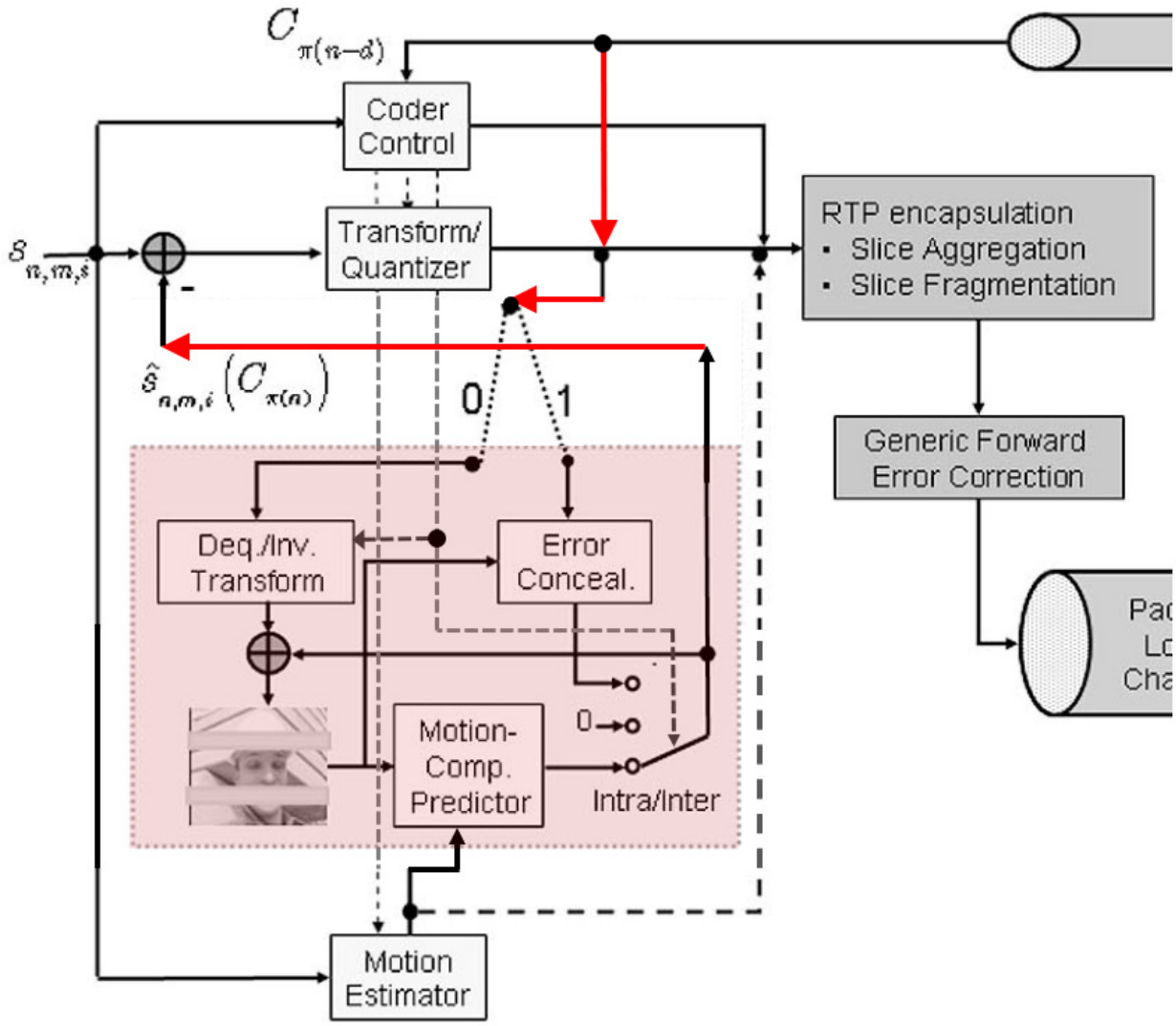

Diagram D (detailed view of the modified encoder of Diagram C).

116. The modified encoder receives feedback (annotated red line in the upper part of Diagram D) via the "back-channel" regarding blocks that were received in error at the remote decoder (not shown in Diagram D, refer to Diagram C). SAMSUNG-1009, 8, Fig. 6. Based on this feedback, a selector (the binary selector shown above the red shaded area in Diagram D) selects between "0" (if the feedback indicates that an error occurred in reception of the macroblock) or "1" (if the feedback indicates that no

error occurred in the macroblock). SAMSUNG-1009, 8, Fig. 6. If the feedback indicates that no error occurred ("0"), then the modified encoder performs the conventional steps of dequantization and inverse transform (upper-left-hand block in the red shaded area of Diagram D) with "motion compensated-predictor" (lower block in the red shaded area of Diagram D) and the second selector at the bottom-right-hand corner of the red shaded area is in the lower-most position. SAMSUNG-1009, 8, Fig. 6. Otherwise, if the feedback indicates that an error occurred ("1"), then the modified encoder performs "error concealment" (upper-right-hand block in the red shaded area of Diagram D) and the second selector at the bottom-right-hand corner of the red shaded area is in the upper-most position. SAMSUNG-1009, 8, Fig. 6.

117. Specifically, in the case of an error ("1"), POSITA would have understood or found obvious, based on the technique of "error tracking" as described in Mualla (as corroborated by Wada) that "the encoder can track the error propagation from the original occurrence up to the current frame" (SAMSUNG-1005, 247) by using a method in which "[t]he same error concealment as is performed at the receiver is carried out in the local-decoded frame stored" and then "[l]ocal decoding is reexecuted from the point of the concealed block(s) up to the currently encoded block" (SAMSUNG-1017, 2).

118. In both scenarios of the feedback indicating error and no error, the encoder's local "decoder" generates a "reconstructed image" (i.e., the aggregate signal $\hat{s}_{n,m,i}(o, C_{\pi(n)})$ that labels the red annotated line on the left-hand side of Diagram D)

which is provided to a subtractor (left-hand side of Diagram D) which subtracts the reconstructed image from the input image (i.e., the input signal $s_{n,m,i}$). SAMSUNG-1009, Fig. 6. This is consistent with the teachings of Mualla for conventional encoding (SAMSUNG-1005, Figure 1.1, discussed above) where the encoder's local decoder generates a "prediction of the input frame" (the reconstructed image) is subtracted from the input frame (the input image).

119. Therefore, in view of the teachings of Mualla (as corroborated by Girod, Wada, and Stockhammer), a POSITA would have understood or found obvious that an error resilience technique (such as the "hybrid error concealment" technique described in Mualla) can be implemented at both the encoder and the decoder in a feedback-based video coding system.

B. Overview of Shirani

120. Shirani is cited in Mualla (as reference [199]) for teaching details of the "hybrid error concealment" technique that was described in Mualla. SAMSUNG-1005, 246. Specifically, Shirani teaches a "two-stage error-concealment method for block-based compressed video which was transmitted in an error-prone environment" in an H.263 video coding framework. SAMSUNG-1006, Abstract; 4. Shirani's "first stage" "obtain[s] an initial estimate of the missing block using information from the previous frame," which Shirani refers to as "temporal" concealment (consistent with Mualla). SAMSUNG-1005, 243-245; SAMSUNG-1006, 1-2. In Shirani's "second stage," "the

information around each missing block is used to refine the initial estimate," which Shirani refers to as "spatial" concealment (consistent with Mualla). SAMSUNG-1005, 242-243; SAMSUNG-1006, 1-3.

121. For the "first stage," Shirani describes a technique that utilizes motion vectors of "subblocks adjacent to the missing block" (in particular, subblocks that are "adjacent above and left" as well as "subblocks ... to the right and below of the missing block") to derive an "initial estimate" of the missing block that has the smallest sum of "border errors." SAMSUNG-1006, 3. Shirani illustrates an example of "subblocks adjacent to the missing block, i.e., *u1, u2*, *l*1, and *l*2 in Fig. 1(a)" (annotated in blue, below). SAMSUNG-1006, 3, FIG. 1(a) (reproduced below).

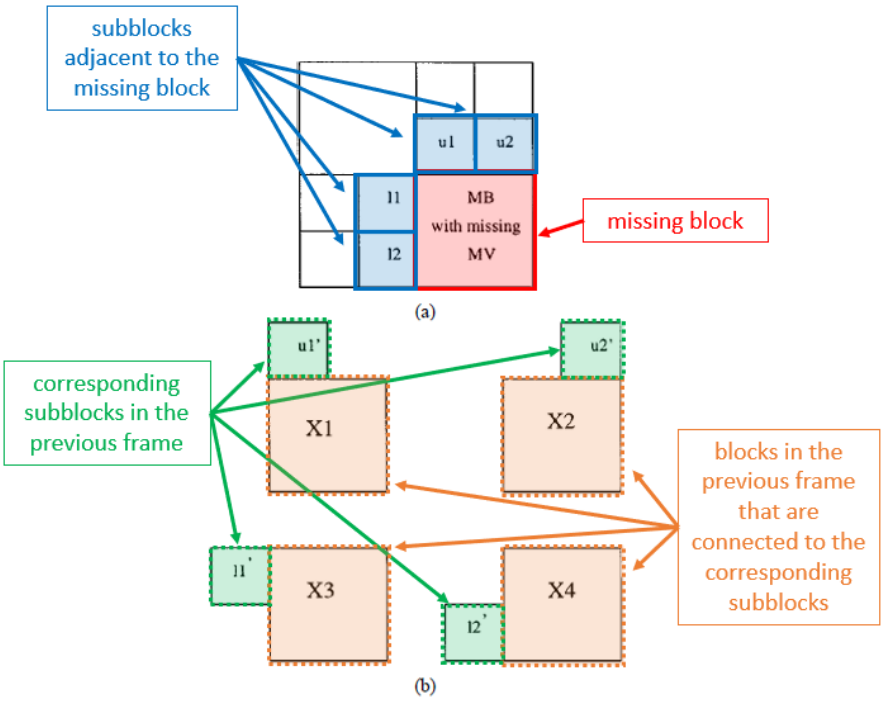

Fig. 1. (a) The four subblocks, (b) their corresponding subblocks in the previous frame, and the blocks connected to them.

SAMSUNG-1006, FIG. 1(a) (annotated and color added).

122. Once these adjacent subblocks (*u1, u2*, *l*1, and *l*2, annotated in blue, above) are identified, Shirani discloses that "for each of these subblocks, a corresponding subblock in the previous frame is determined" (denoted *u*1', *u*2', *l*1', and *l*2' at the bottom of FIG. 1(a) of Shirani, annotated in green, above). SAMSUNG-1006, 3. Then, "four blocks, namely X1, X2, X3, and X4 [annotated in orange in FIG. 1(a), above], which are connected to *u*1', *u*2', *l*1', and *l*2', and (respectively), are determined" and "a block from the above four blocks [(X1, X2, X3, and X4)] that minimizes the squared sums of border errors, between the estimated block and its adjacent above and left blocks, is selected." SAMSUNG-1006, 3. This is accomplished by defining "border error[s]" in "terms of pixels," including an error for the "bottom line pixels of the block to the top of the missing block" and an error for the "right column pixels of the block to the left of the missing block" and applying the same technique to define border errors for pixels adjacent to "the subblocks ... to the right and below of the missing block." *Id.*

123. To estimate the motion of the adjacent subblocks (u1, u2, l1, and l2, annotated in blue, above), Shirani discloses that "computational overhead can be reduced if the search for displacement of each of the subblocks is restricted to a set of candidate motion vectors," where the candidate motion vectors can include "the motion vectors of available neighboring blocks, the median of the motion vectors of available neighboring blocks, the average of the motion vectors of available neighboring

blocks." SAMSUNG-1006, 3. Furthermore, although the above description focused on adjacent subblocks above and to the left of the missing block, Shirani also discloses that "the same method can be extended to include the subblocks of the blocks to the right and below of the missing block." SAMSUNG-1006, 3.

124. For the "second stage," Shirani describes various techniques of "spatial error concealment" that can "refine the initial estimate" (obtained in the first stage, above) by utilizing "information around each missing block." SAMSUNG-1006, 1, 3. As examples of "spatial error concealment," Shirani describes techniques in which neighboring pixels around the missing block are used, to "refine the initial estimate" that was obtained in the first stage. SAMSUNG-1006, 1 ("each pixel in a damaged block is interpolated from the corresponding pixels in its four neighboring blocks"), 3 ("[i]n the second stage of our proposed error-concealment method, the information around each missing block is used to refine the initial estimate").

C. Overview of Saito

125. Saito discloses "image approximation" using techniques that are based on solving Poisson's equation. SAMSUNG-1007, 6, 27. Saito expresses an overarching goal of improving "the perceptual quality of these approximations" and a desire for a "perceptually correct metric" that can improve the "visual quality" of approximated images. SAMSUNG-1007, 18. Saito also discusses the relevance of "psychophysical

experiments" in selecting appropriate image approximation techniques that improve "visual fidelity" of reconstructed images. SAMSUNG-1007, 24.

126. To achieve these goals, Saito discloses a "polyharmonic local sine transform" (PHLST) and a "polyharmonic local cosine transform" (PHLCT) that both solve Poisson's equation and are "effective for image approximation." SAMSUNG-1007, 6, 27. Saito explains that "PHLST can represent smooth regions of an image very efficiently" and therefore "image approximation and compression are immediate and important applications of PHLST." SAMSUNG-1007, 8-9. Saito further discloses "extensions and applications of PHLST" which include a version called "polyharmonic local cosine transform (PHLCT)." SAMSUNG-1005, 27. Saito explains that the PHLCT technique can "solve the ... Poisson equation with the Neumann boundary condition." *Id.* Saito further explains that the PHLCT utilizes "the first order normal derivative of data at the boundary." *Id.* In particular, Saito discloses that the solution to Poisson's equation has "the same normal derivative at the boundary with the original function" by ensuring that "the residual function v_j ... clearly satisfies $\partial v_j/\partial v = 0$ on $\partial\Omega_j$." SAMSUNG-1007, 27. Thus, Saito's PHLCT technique ensures that the derivative of the estimated signal at a boundary of a block is equal to the derivative of the signal to be estimated at the boundary, thus ensuring smoothness of the estimated image across block boundaries with less "blocking artifacts". SAMSUNG-1007, 27; *see also* 5, 58, Abstract, FIG. 11 (reproduced below).

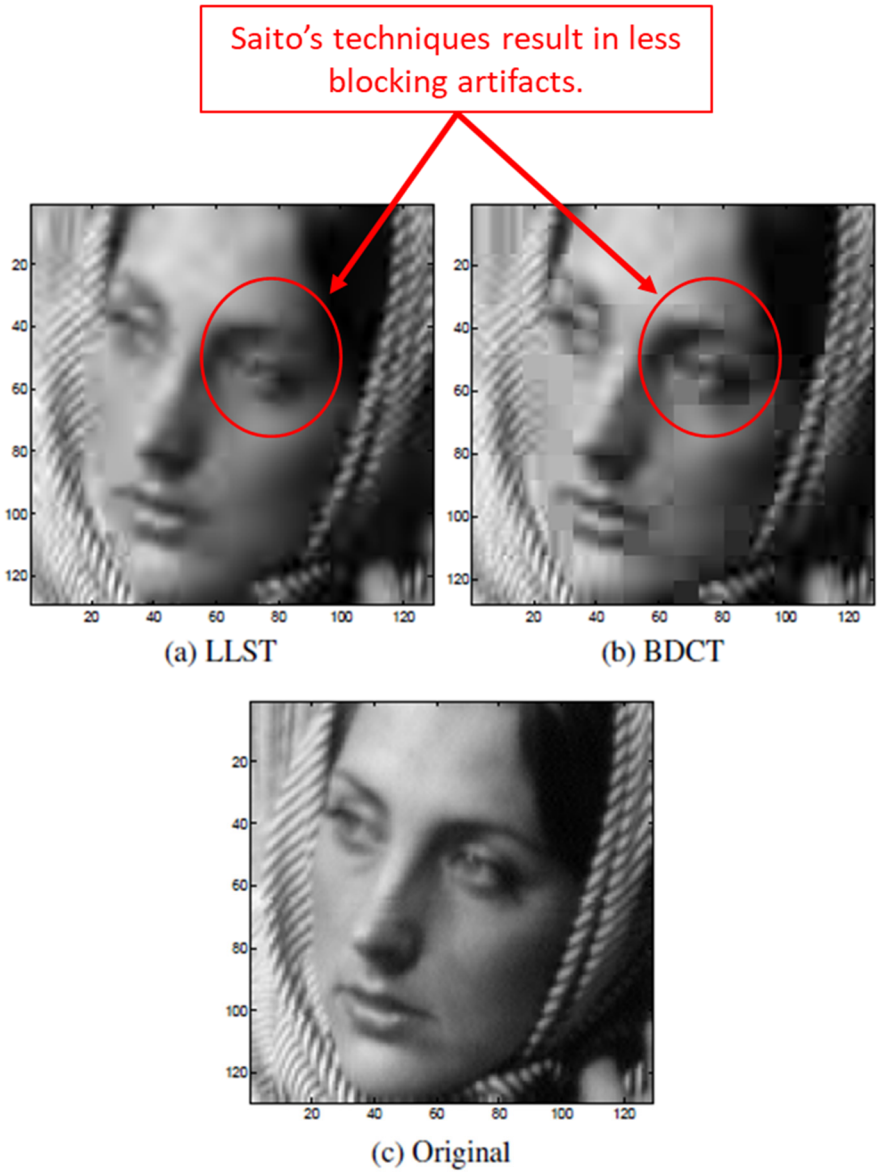

SAMSUNG-1007, FIG. 11 (Cropped and annotated).

D. The combination of Mualla and Shirani (and the Combination of Mualla-Stockhammer and Shirani in Ground 1B[2])

127. As discussed above, Mualla describes "hybrid error concealment" techniques for "error resilience" in video coding that implements both temporal and spatial concealment. SAMSUNG-1005, 241-246. Mualla specifically cites Shirani for details of this "hybrid error concealment" technique. SAMSUNG-1005, 241-246. Given Mualla's explicit reference to Shirani, a POSITA would have naturally looked to Shirani and its "two-stage error concealment" technique for further details of how to implement "hybrid error concealment" as described in Mualla. SAMSUNG-1005, 246; SAMSUNG-1006, 1-6. A POSITA implementing the supplemental teachings of Shirani into the existing disclosure of Mualla would have created the Mualla-Shirani combination (and the Mualla-Stockhammer-Shirani combination in Ground 1B).

128. In particular, the hybrid error concealment techniques of the Mualla-Shirani combination perform error detection to detect whether errors exist in a frame (also referred to as a picture). SAMSUNG-1005, 241-246; SAMSUNG-1006, 2-4. If errors are detected in a frame/picture, a two-stage motion-compensated error

[2] Although my discussion in this section focuses on the combination of Mualla and Shirani, it is similarly applicable to the combination of Mualla-Stockhammer and Shirani in Ground 1B, with Stockhammer supplementing Mualla merely to provide illustrative details of implementing what a POSITA would have understood or found obvious to already be taught by Mualla's error concealment disclosure.

concealment algorithm is applied to perform both temporal and spatial concealment to conceal the errors and generate a predicted frame. SAMSUNG-1005, 242-246; SAMSUNG-1006, 2-4. Otherwise, if no errors are detected, conventional motion compensation is applied. *Id.* Specifically, as discussed above, the two-stage (hybrid) error concealment algorithm of the Mualla-Shirani combination implements a "first stage" which applies "temporal" concealment and a "second stage" which applies "spatial" concealment. SAMSUNG-1005, 242-245; SAMSUNG-1006, 1-3.

129. Furthermore, in the combination of Mualla and Shirani, and in particular in Shirani's "two-stage error concealment" technique, Shirani describes various alternatives for the "second stage" (in which "spatial" concealment is performed). As discussed above, as an example of the second stage, Shirani describes a spatial concealment technique in which "each pixel in a damaged block is interpolated from the corresponding pixels in its four neighboring blocks such that the total squared border error is minimized." SAMSUNG-1006, 1.

130. Furthermore, as discussed above, the two-stage hybrid error concealment is implemented in both the encoder and the decoder ("interactive" error concealment), as taught by Mualla, so that the encoder and decoder can "cooperate to minimize the effects of transmission errors" and in particular so that "coding efficiency can also be improved by performing error concealment in the encoder so that both encoder and decoder use the same reference frames for prediction." SAMSUNG-1005, 246-250.

131. As explained below in more detail, combining Mualla and Shirani would have been obvious at least because such a combination would have merely involved (1) combining prior art elements according to known methods to yield predictable results; and the (2) use of known techniques to improve similar devices in the same way. Indeed, Mualla describes a similar hybrid error concealment technique as Shirani, and the combination would have simply involved adding Shirani's teachings into the compatible teachings of Mualla, thus, for at least this reason, making the Mualla-Shirani combination predictable and foreseeable with a reasonable expectation of success. SAMSUNG-1005, 246; SAMSUNG-1006, 1-6. Moreover, because Mualla explicitly cites to Shirani's teachings when discussing its own techniques of hybrid error concealment, the use of Shirani's techniques in Mualla would have improved a similar device in the same way. SAMSUNG-1005, 246. Additionally, Mualla and Shirani implement their teachings in similar video coding standards (e.g., H.263). SAMSUNG-1005, 71-94, 231; SAMSUNG-1006, 4-5.

E. The combination of Mualla, Shirani, and Saito (and the Combination of Mualla-Stockhammer-Shirani and Saito in Ground 1B[3])

132. As discussed above, the combination of Mualla and Shirani (and the combination of Mualla-Stockhammer and Shirani in Ground 1B) implements a two-stage (hybrid) error concealment technique. In particular, the second stage applies "spatial error-concealment" to "restore the missing blocks using the information in the current frame." SAMSUNG-1006, 1; *see also* SAMSUNG-1005, 242 (explaining that spatial concealment techniques "conceal damaged pels in a frame using information from correctly received and/or previously concealed neighboring pels within the same frame"). Both Mualla and Shirani disclose that "spatial" concealment can be implemented using various techniques from the field of conventional image-processing, each with benefits and tradeoffs. SAMSUNG-1005, 242-243; SAMSUNG-1006, 1.

133. Therefore, as evidenced in the teachings of both Mualla and Shirani, a POSITA would have understood or found obvious that **image-processing** techniques

[3] Although my discussion in this section focuses on the combination of Mualla-Shirani and Saito, it is similarly applicable to the combination of Mualla-Stockhammer-Shirani and Saito in Ground 1B, with Stockhammer supplementing Mualla merely to provide illustrative details of implementing what a POSITA would have understood or found obvious to already be taught by Mualla's error concealment disclosure.

are a natural solution for implementing the **second-stag**e "**spatial**" concealment of the Mualla-Shirani two-stage hybrid technique. It was well-known to use image-processing techniques to perform spatial concealment within an individual frame of a video. SAMSUNG-1011 (disclosing a hybrid-type "space-time video completion" techniques for "[c]orrection of missing/corrupted video frames" in which "classical spatial image completion and synthesis" is implemented for "spatial" correction within an individual video frame).

134. Furthermore, a POSITA would have understood or found obvious that image processing can be performed by techniques that involve solving Poisson's equations. Numerous research papers and patents had, several years before the Critical Date, described techniques for image editing and image reconstruction that involved solving Poisson's equation. SAMSUNG-1010 (disclosing "Poisson image editing" which is "based on solving Poisson equations" for "seamless editing of image regions"); SAMSUNG-1012 (disclosing techniques for "image reconstruction" by "solving the Poisson differential equation"); SAMSUNG-1013 and SAMSUNG-1014 (disclosing techniques for "natural image matting" by "solving Poisson equations"); SAMSUNG-1015 (disclosing a technique that "constructs a low dynamic range image by solving a Poisson equation").

135. A POSITA would have understood or found obvious that image processing techniques involving Poisson's equation are particularly effective in

addressing the same challenges and achieving the same goals emphasized by Mualla and Shirani for error concealment applications. For example, Mualla explains the fundamental importance of considering the "human visual system (HVS)" in video codec techniques. SAMSUNG-1005, 33, 36, 40, 52, 55, 59. Mualla explains that the "classical view of image the image coding problem" has a disadvantage because it "does not place enough emphasis on exploiting the properties of the HVS [human visual system]. Efforts to utilize models of the HVS and to use more representative coding entities (real objects) led to a new class of coding methods known as the second-generation coding methods." SAMSUNG-1005, 59. Specifically, in the context of error reslience and error conealment, Mualla explains that a "decoder attempts to conceal the effects of errors by providing a **subjectively acceptable** approximation to the original data. This is achieved by exploiting the limitations of the **human visual system** and the high temporal and/or spatial correlation of video sequences." SAMSUNG-1005, 242; 251. Indeed, Mualla measures the performance of different error concealment techniques by the "**[s]ubjective quality**" of error-concealment in a video frame, as viewed by the human visual system. SAMSUNG-1005, 265; 268 Figures 10.8, 10.10. In addition to these challenges of providing good subjective quality of error-concealed images for the human visual system, Mualla also explains a mathematical challenge in that "[e]rror concealment is an ill-posed problem since it **does not have** a **unique solution**." SAMSUNG-1005, 242; 251. Like Mualla, Shirani also stresses the

fundamental importance of considering the "limitations of the **human visual system**" when designing an error concealment technique, as well as the benefits of using a technique that can achieve a "a **unique** global **solution**." SAMSUNG-1006, 1, 4.

136. In view of Mualla and Shirani emphaszing a fundamental goal of improving the "subjective quality" of error concealment techniques for the "human visual system," a POSITA would have understood that an image approximation technique based on **solving Poisson's equation**, as taught by Saito (SAMSUNG-1007), is an effective way to achieve this goal. The Poisson equation has been used extensively in field of image processing and computer vision due to the specific benefits it provides for improving the perceptual quality of reconstructing images. SAMSUNG-1010 (disclosing "[t]he Poisson equation has been used extensively in computer vision" because "it is well known to psychologists [Land and McCann 1971] that slow gradients of intensity, which are suppressed by the Laplacian operator, can be superimposed on an image with barely noticeable effect. Conversely, the second-order variations extracted by the Laplacian operator are the most significant perceptually").

137. Therefore, as discussed above: (i) Mualla and Shirani both recognize that **image processing** techniques can be utilized to implement **second-stage spatial** error concealment in the Mualla-Shirani two-stage hybrid error concealment technique for video frames, (ii) image processing techniques that involve **solving Poisson's equation** were well-known to provide specific benefits for improving the perceptual

quality of reconstructed images for the human visual system, thus addressing a fundamental objective of Mualla and Shirani's error concealment. As such, a POSITA would have understood or found obvious that image-processing techniques based on solving Poisson's equation would have been naturally applicable for implementing the second-stage "spatial" concealment of the Mualla-Shirani two-stage hybrid error concealment algorithm for video frames. Indeed, literature in video coding spatial error concealment and literature in image processing by solving Poisson's equation both cited to similar techniques. For example, Wexler (SAMSUNG-1011, which describes using classical spatial image processing techniques for correcting video frames) and Perez (SAMSUNG-1010, which describes Poisson image editing as an example of an image processing technique) both discuss a technique called "image inpainting" as an example of image processing and cite to many of the same references as related art for details of image inpainting.

138. Saito provides details of implementing solutions to Poisson's equation for image approximation. A POSITA would have understood that Saito, which was published in 2006 (over 4 years after Mualla and Shirani), was a natural advancement of applying Poisson's equation to improve the visual quality of image approximation and represented a state-of-the-art solution at the time of the Critical Date. Like Mualla and Shirani, Saito expresses an overarching goal of improving "the perceptual quality of these approximations" and a desire for a "perceptually correct metric" that can improve

the "visual quality" of approximated images. SAMSUNG-1007, 18. Saito also discusses the relevance of "psychophysical experiments" in selecting appropriate image approximation techniques that improve "visual fidelity" of reconstructed images. SAMSUNG-1007, 24.

139. As discussed above, Saito discloses a "polyharmonic local sine transform" (PHLST) and a "polyharmonic local cosine transform" (PHLCT) that solve Poisson's equation and are "effective for image approximation." SAMSUNG-1007, 6, 27. In particular, Saito explains that its PHLCT technique "shall solve the [] Poisson equation with the Neumann boundary condition." SAMSUNG-1007, 27.

140. Furthermore, as discussed above, a POSITA would have recognized or found obvious that Mualla, Shirani, and Saito all strive to achieve similar goals in spatial image approximation, and in correspondence with that, a POSITA would have had a reasonable expectation of success in combining Saito's techniques into Mualla-Shirani. For example, both Shirani and Saito strive to improve reconstruction of high-frequency edges and discontinuities in an image. *See, e.g.,* SAMSUNG-1006, 5 (explaining a key goal of Shirani's second-stage spatial error concealment is to improve "reconstruction quality, particularly in retrieving the edges and in the areas of the frame that correspond to adjacent missing blocks."), and 7 (describing that a "performance advantage is demonstrated in the blocks that contain edges"); and SAMSUNG-1007, 1 (explaining that Saito's techniques "can distinguish intrinsic singularities in the data from the

artificial discontinuities created by the local windowing"), 2 (explaining that a goal of Saito's techniques is to avoid "artificial discontinuities due to the local windowing or the brute-force periodization so that we can focus on the analysis of intrinsic discontinuities and singularities in the signal"), 4 (explaining that Saito's techniques "can distinguish intrinsic singularities in the data from the artificial discontinuities created by the local windowing").

141. As discussed above, Saito's PHLCT technique ensures that the derivative of the estimated signal at a boundary of a block is equal to the derivative of the signal to be estimated at the boundary. SAMSUNG-1007, 27; *see also* 5, Abstract; *see above* §VI.C. A POSITA would have understood or found obvious that this is consistent with Shirani's "second stage" technique generating a "refined initial estimate" that has border pixel values with a "border error" that is equal to the "border error" of the "initial estimate" that was generated in Shirani's "first stage." SAMSUNG-1006, 1, 3; SAMSUNG-1007, 27; *see also* 5, Abstract. Shirani's "border error" is equivalent to Saito's "derivative at the boundary" (which is equivalent to the '025 patent's "gradient" value at a boundary) because both Shirani's "border error" and Saito's "derivative at the boundary" are equal to a difference of adjacent pixel values across a border/boundary between two blocks. Furthermore, a POSITA would have understood or found obvious that because Saito's PHLCT technique can achieve a faster "decay rate" for the error signal at the boundaries of blocks, this is consistent with Shirani's goal of

"improv[ing] the video reconstruction quality" by ensuring that "image continuity inside the block and across its boundaries is preserved." SAMSUNG-1007, 27; SAMSUNG-1006, Abstract, 3.

142. As explained below in more detail, combining Mualla-Shirani and Saito would have been obvious at least because such a combination would have merely involved (1) combining prior art elements according to known methods to yield predictable results; and the (2) use of known techniques to improve similar devices in the same way.

143. In the resulting combination of Mualla, Shirani, and Saito, if no errors are detected in a frame of video, then conventional motion compensation is applied to the frame "to provide a prediction of the current frame," as taught by Mualla and Shirani. SAMSUNG-1005, 27, Figure 1.1, 115-116; SAMSUNG-1006, Abstract 2-3. Otherwise, if an error is detected in one or more blocks of a frame, then a motion-compensated two-stage hybrid error concealment technique is applied to the frame. The "first stage" applies Shirani's "temporal" concealment to find a block X_i in the previous frame with border pixels that have the smallest sum of "border errors" relative to surrounding blocks, as taught by Shirani. SAMSUNG-1005, 242-245; SAMSUNG-1006, 1-3. The resulting block X_i is an "initial estimate" of the erroneous/missing block.

144. Then, the "second stage" of the Mualla-Shirani two-stage hybrid error concealment technique refines the "initial estimate" X_i by applying "spatial"

concealment in which "the information around each missing block" is utilized to estimate pixels values in the interior of the estimated block X_i. SAMSUNG-1005, 242-245; SAMSUNG-1006, 1-3. Here, the second-stage spatial concealment of Mualla-Shirani is modified to implement Saito's PHLCT to interpolate the interior pixels of the Mualla-Shirani initial estimate X_i. In particular, the second-stage spatial concealment obtains a solution to Poisson's equation with Neumann boundary conditions equal to the normal derivatives at boundaries of the missing block (as taught by Saito). These normal derivatives at the boundaries are based on Shirani's "border errors" that were obtained in Shirani's first stage. As a result, the Mualla-Shirani-Saito combination uses a Poisson-equation-solving image approximation technique (e.g., PHLCT as taught in Saito) to implement spatial error concealment in the second stage of the Mualla-Shirani two-stage hybrid error concealment technique, thereby generating a refinement of the "initial estimate" that was obtained in Shirani's first stage. The result is an estimated frame in which erroneous/missing blocks have been concealed. A POSITA would have recognized and found obvious that Saito's image approximation techniques based on solving Poisson's equation would have enhanced Shirani's "second stage" techniques, "improv[ing] the video reconstruction quality" in order to achieve similar goals of image approximation. SAMSUNG-1007, 27; SAMSUNG-1006, Abstract, 3.

145. Furthermore, as discussed above, the modified two-stage hybrid error concealment of the Mualla-Shirani-Saito combination is implemented in both the

encoder and the decoder, as taught by Mualla, so that the encoder and decoder can "cooperate to minimize the effects of transmission errors" and in particular so that "coding efficiency can also be improved by performing error concealment in the encoder so that both encoder and decoder use the same reference frames for prediction." SAMSUNG-1005, 246-250.

VII. Ground 1A/1B – Claims 1-10 are Obvious under 35 U.S.C. § 103 based on Mualla, Shirani, and Saito (1A) and Mualla, Shirani, Saito, and Stockhammer

A. Analysis[4]

146. In my opinion, a person of ordinary skill in the art would have found claims 1-10 of the '025 patent to have been obvious based on Mualla, Shirani, and Saito, and additionally based on Mualla, Shirani, Saito, and Stockhammer.

147. As an initial matter, the '025 Patent includes claims that recite both encoding and decoding operations (despite the claim being directed to an "encoding" or "decoding" apparatus by the preamble). *See, e.g.*, SAMSUNG-1006, Claim 6. To indicate which limitations include predominately encoding or decoding steps, I have

[4] Although my discussion in this section focuses on the combination of Mualla-Shirani-Saito, it is similarly applicable to the combination of Mualla-Stockhammer-Shirani-Saito in Ground 1B, with Stockhammer supplementing Mualla merely to provide illustrative details of implementing what a POSITA would have understood or found obvious to already be taught by Mualla's error concealment disclosure.

added the annotations of COD ("encoding") and DEC ("decoding") to the title of each claim limitation. This annotation is solely an aide to the reader and should not be viewed as an argument that a limitation discloses only one operation or the other.

1. "Moving picture decoding" claims 6-8, and 10;

[6.pre] A moving-picture decoding apparatus comprising:

148. Mualla teaches extensive details of an H.263-based video codec system, which implements a ***decoding apparatus*** for decoding ***moving pictures*** (e.g., "video"). SAMSUNG-1005, 23-26, 31, 36, 51-52, 227-228, 241-242, 265. For example, in describing "Transform Coding" which "forms the basis of almost all video coding standards," Mualla describes a ***decoder*** implemented in a "transform coding system." SAMSUNG-1005, 51 (last paragraph), Figure 2.9 (reproduced below). As another example, in describing techniques for "error resilience" in video coding systems, Mualla discloses a ***decoder*** implemented in a "typical video communication system." SAMSUNG-1005, 227-228, Figure 9.1 (reproduced below).

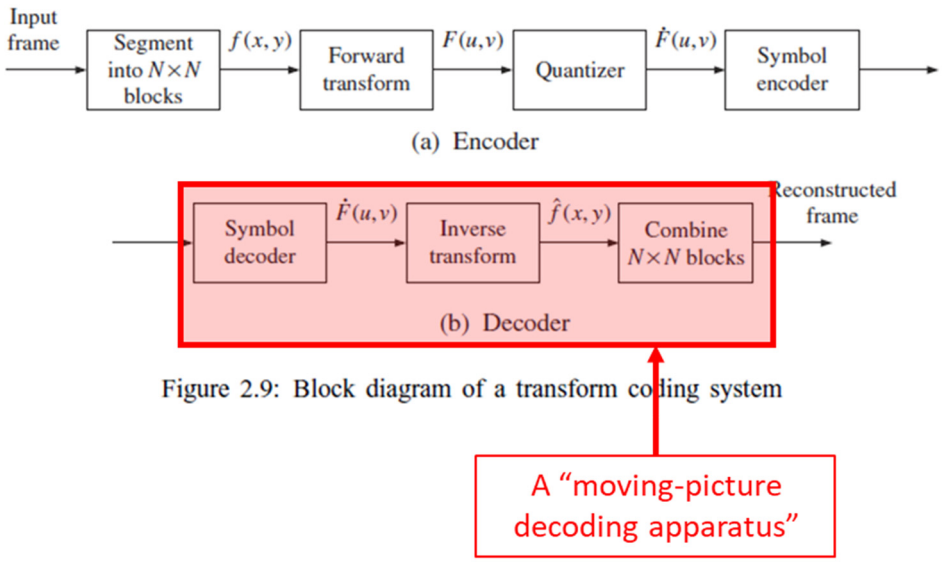

SAMSUNG-1005, FIG. 2.9 (annotated and color added).

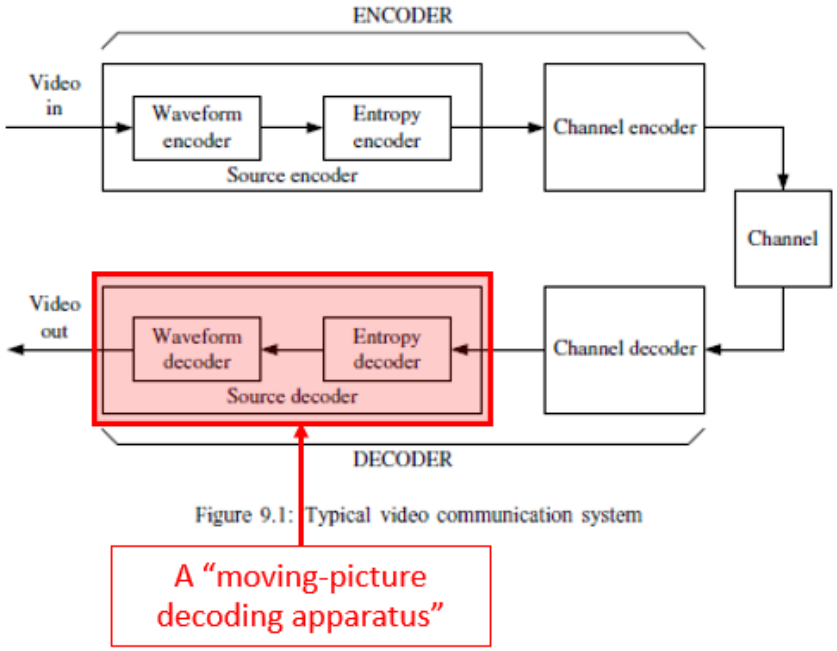

SAMSUNG-1005, FIG. 9.1 (annotated and color added).

149. Shirani similarly discloses using the H.263-based video codec system and its associated ***decoding apparatus***. SAMSUNG-1006, 2-4 ("[w]hen channel errors occur, **the decoder** usually discards the erroneous data"), 4 ("H.263").

[6.1.DEC] a demultiplexer to demultiplex coded data from an input signal based on a specific syntax structure,

150. Shirani discloses that "[c]oded video information [("***coded data from an input signal***")] is first grouped into packets" and the "video packets are … multiplexed with audio information" using an "H.223 multiplexing" protocol. SAMSUNG-1006, 5. Multiplexing video packets at an encoder would have required a means for "***demultipex[ing]***" the video packets at the decoder, for example, by using a ***demultiplexer***. Indeed, the H.263 standard (the standard used by Mualla and Shirani) corroborates the use of demultiplexers in H.263 codecs for "***demultiplex[ing] coded data from an input signal***." SAMSUNG-1016, 2.

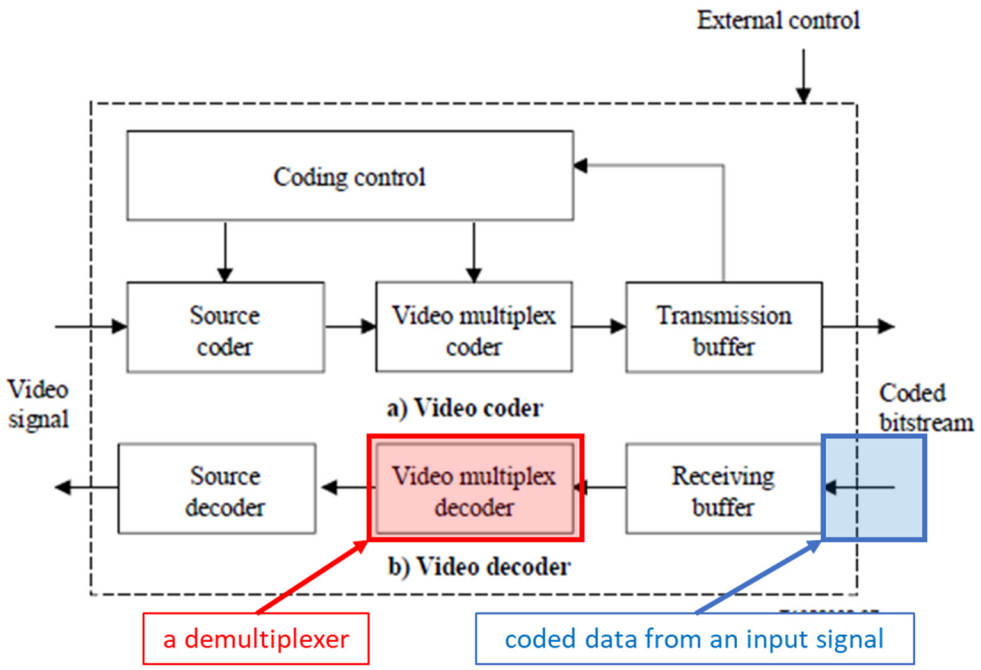

Figure 1/H.263 – Outline block diagram of the video codec

SAMSUNG-1016, FIG. 1 (annotated and color added).

151. Additionally, Girod – a H.263 codec reference cited by Mualla as reference 201 – discloses that information is "multiplexed to the video bitstream." SAMSUNG-1008, 2, FIG. 1(b). FIG. 1(b) illustrates an example decoder with a "***demultiplexer***."

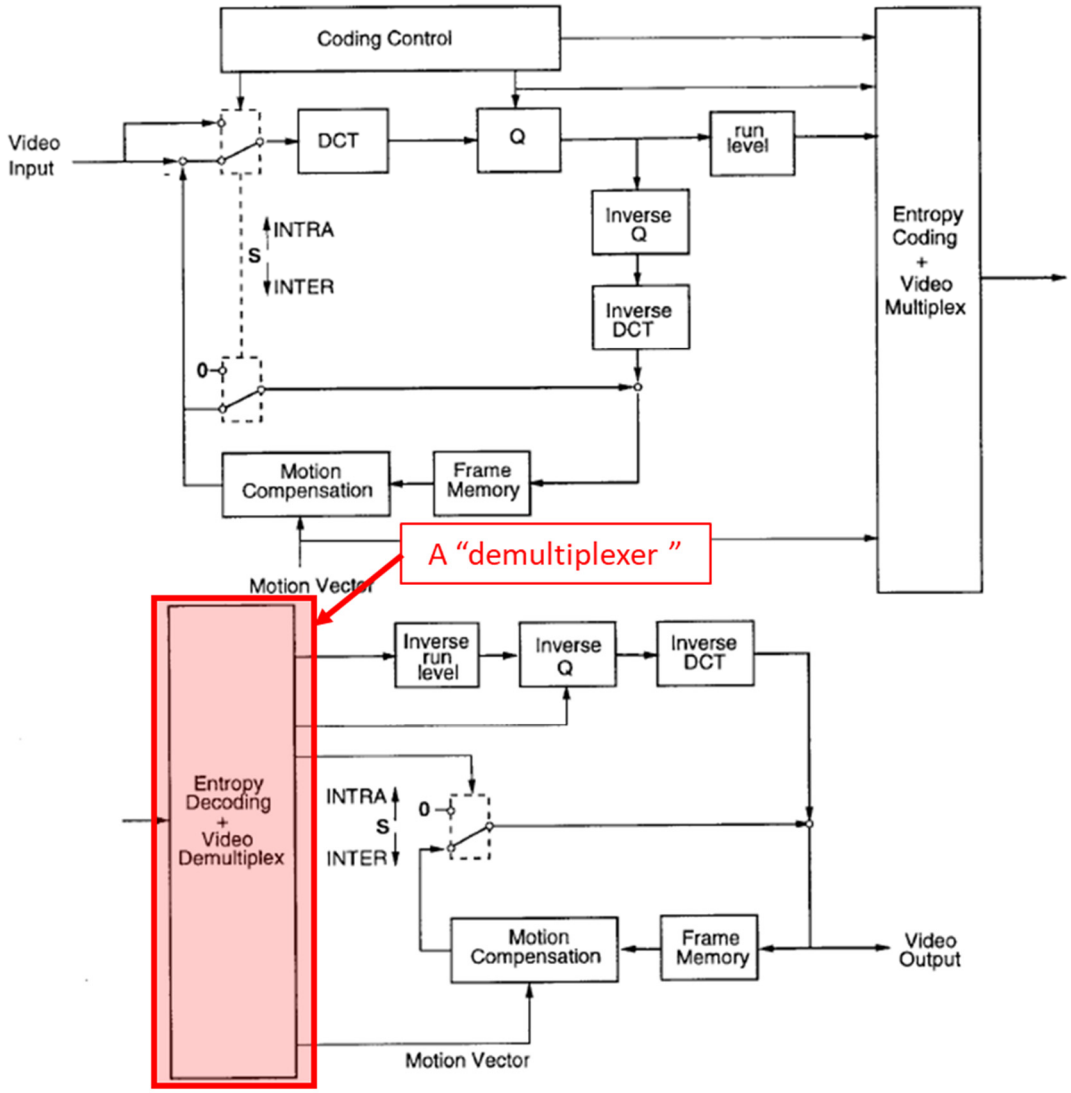

SAMSUNG-1008, FIG. 1(a) ("encoder") and 1(b) ("decoder") (annotated and color added).

152. Furthermore, Mualla and Shirani both disclose the H.263 ***specific syntax structure***. SAMSUNG-1005, 93, 232; SAMSUNG-1006, 2, 4-5. Indeed, Mualla refers

to the H.263 codec standard as "the ***syntax*** of H.263." SAMSUNG-1005, 93. Mualla and Shirani also both use the specific syntax structure of the H.263 codec standard as a gauge for detecting errors in a video bitstream. SAMSUNG-1005, 231-232; SAMSUNG-1006, 2. For example, Mualla's process of "error correction" uses "***syntax*** … violations" to detect errors in a video bitstream. SAMSUNG-1005, 231-232. Shirani discloses a similar process where a decoder determines the "location of missing blocks" by "detecting … semantic or ***syntactic*** violations." SAMSUNG-1006, 2.

[6.2.COD] the input signal being obtained by multiplexing a coded bitstream obtained by predictive coding, border motion-vector data and post-quantization data obtained by quantization in the predictive coding,

153. As described above in 6.1.DEC, Shirani discloses ***multiplexing a coded bitstream***, and a POSITA would have understood or found obvious that the H.263 codec standard, as used in Mualla and Shirani, included ***multiplexing*** operations. SAMSUNG-1006, 5; *see above*, [6.1.DEC]. Indeed, the H.263 standard discloses multiplexing and demultiplexing a "***coded bitstream***." SAMSUNG-1016, 2, 9.

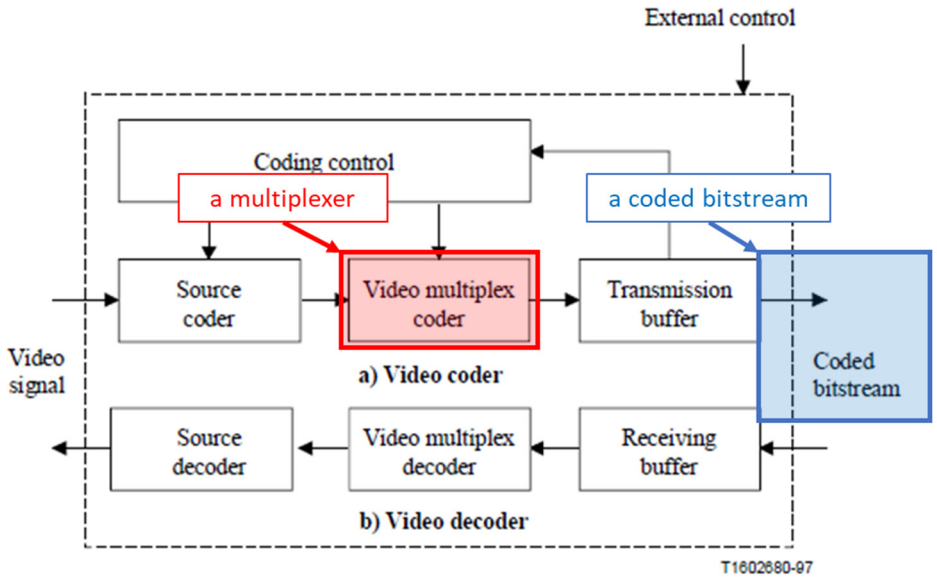

Figure 1/H.263 – Outline block diagram of the video codec

SAMSUNG-1016, FIG. 1 (annotated and color added).

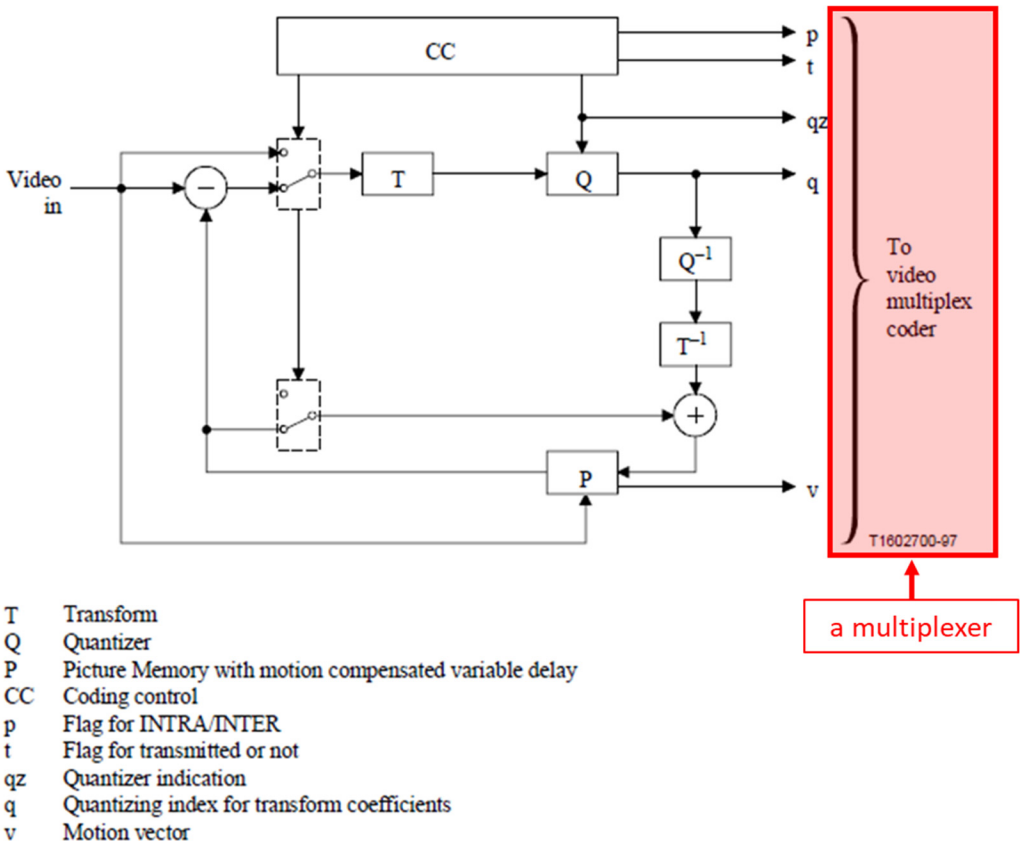

Figure 3/H.263 – Source coder

SAMSUNG-1016, FIG. 3 (annotated and color added).

154. Furthermore, as shown in Mualla's Figure 3.1 and explained in further detail below, a POSITA would have understood or found obvious, based on the teachings of Mualla, that the coded bitstream is obtained by encoding motion vectors (which include the claimed "***border motion-vector data***") and a quantization index (the claimed "***post-quantization data***"), along with various coding control information. SAMSUNG-1005, Figure 3.1 (reproduced below), 71-75.

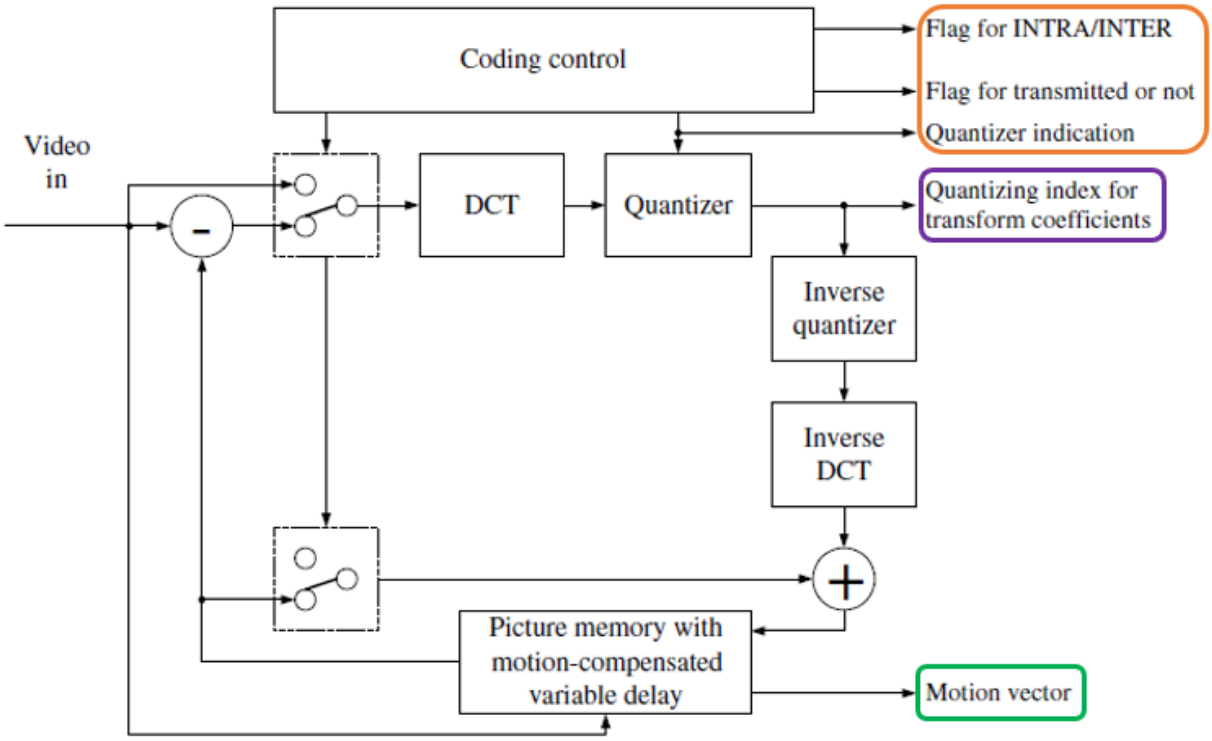

Figure 3.1: H.263 video encoder

SAMSUNG-1005, Figure 3.1 (annotated).

...obtained by predictive coding

155. Mualla describes numerous operations at the encoder that perform predictive coding. For example, Mualla discloses a "video codec" that includes a "motion estimation (ME) block … to estimate the movement that occurred between the current frame and a reference frame." SAMSUNG-1005, 26-27, 115-117, FIG. 1.1. Mualla refers to this estimation as "motion information." *Id.* Motion information is then "utilized by the motion compensation (MC) block to move the contents of the reference frame to provide a prediction of the current frame" ("***predictive coding***") which Mualla also refers to as the "motion-compensated prediction (MCP)." Id.

Mualla refers to "motion compensated prediction" as a type of "predictive coding" in which regions of an input frame are predictively coded "with respect to the corresponding regions in the reference frame." SAMSUNG-1005, 61. Mualla's "typical video codec" illustrates these components.

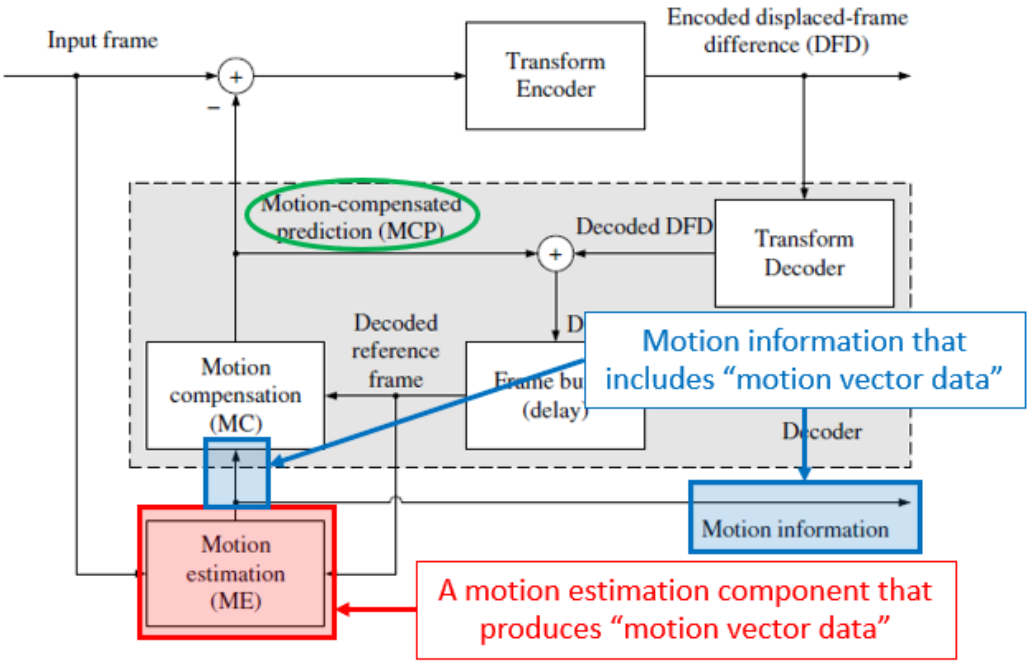

Figure 1.1: Typical video codec

SAMSUNG-1005, FIG. 1.1 (annotated and color added).

156. As another example of predictive coding, Mualla discloses that the "motion information" (motion vector) itself is predictively coded. Mualla discloses that the "motion of the [a] current block" (e.g., the motion information) is "represented by a motion vector" ("***motion-vector data***") which is the "displacement between the block and its best-match block in the reference frame." SAMSUNG-1005, 62, FIG. 2.16. An example motion vector is illustrated by Mualla in FIG. 2.16 below.

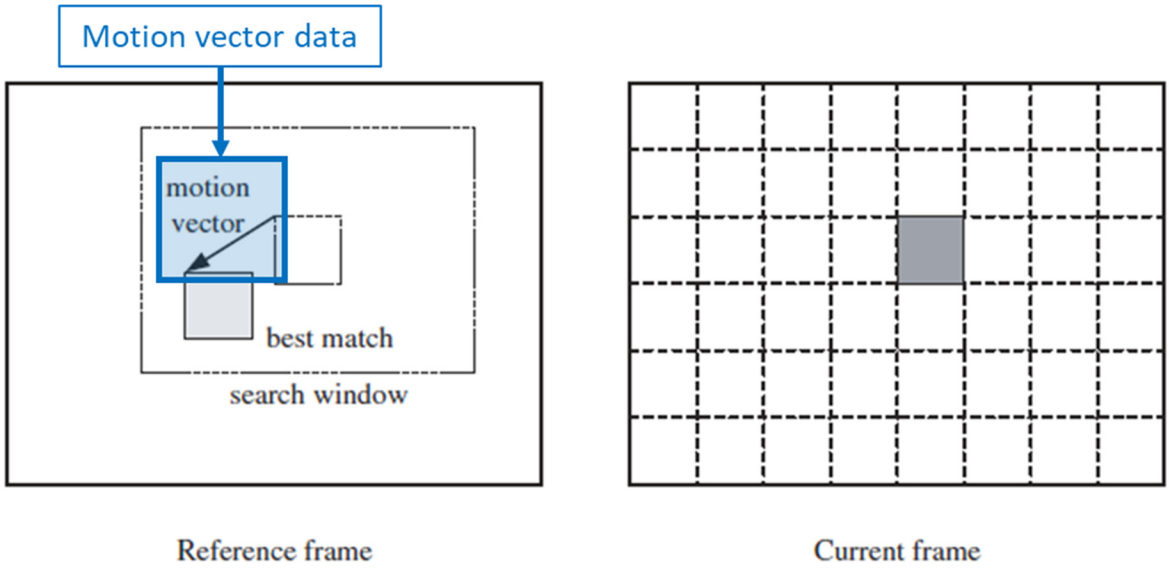

Figure 2.16: Block-matching motion estimation

SAMSUNG-1005, FIG. 2.16 (annotated and color added).

157. Mualla discloses that the "estimated motion vector" is "predictively coded" (part of "***a coded bitstream obtained by predictive coding***"), meaning that the "motion vector difference MVD = MV – MVP is encoded instead of the motion vector itself." SAMSUNG-1005, 74, *see also* 115-117. The MVP is "the median of three candidate predictors, which are the motion vectors of three surrounding macroblocks" ("a motion vector from a border of the rectangular zone"). One example of this grouping of motion vectors is annotated in Mualla's FIG. 3.3.

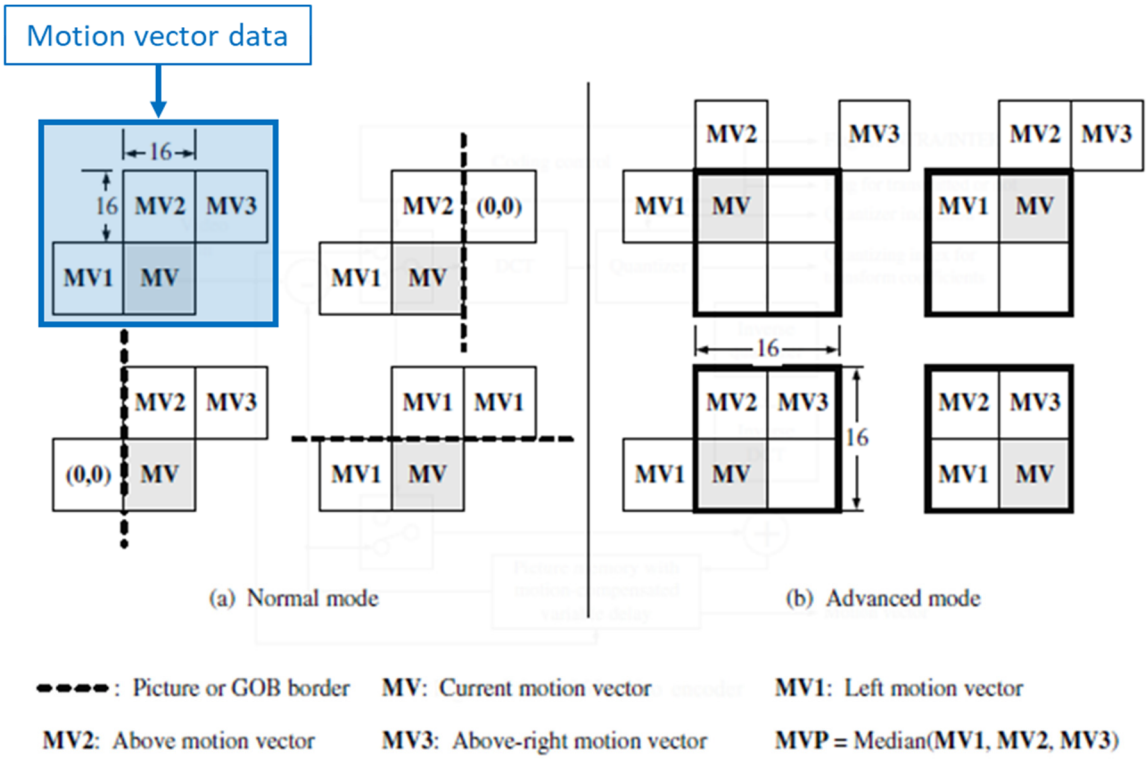

Figure 3.3: H.263 motion vector prediction

SAMSUNG-1005, FIG. 3.3 (annotated and color added).

***border** motion-vector data*

158. As an initial matter, the '025 patent describes "***border motion-vector data***" as "data on a motion vector from a border of the rectangular zone in the picture to be coded to the border of the reference picture thus found." SAMSUNG-1001, 2:59-61; *see below*, [6.6.COD].

159. As discussed above, the Mualla-Shirani-Saito combination implements a two-stage hybrid error concealment in the encoder (as well as the decoder), as taught by Mualla. SAMSUNG-1005, 246-250. In particular, the encoder of the Mualla-Shirani-Saito combination implements the first-stage of Shirani's two-stage error

concealment technique to the motion of a missing/erroneous macroblock by performing temporal concealment. *See above*, §§VI.B, E. Notably, in the combination, Shirani's first stage uses motion vectors of neighboring blocks to obtain estimates of pixels at the borders of a missing block. *See above*, §§VI.B, E; SAMSUNG-1006, 2-3. In particular, the first stage of Shirani estimates motion vectors of subblocks adjacent to the missing block, and in doing so, utilizes "candidate motion vectors" ("data on a motion vector") which can include motion vectors of "neighboring blocks." *See above*, §§VI.B, VI.D, VI.E; SAMSUNG-1006, 2-3. These motion vectors of neighboring blocks are used to obtain an estimate of pixels at each border of the missing block ("***from a border of the rectangular zone in the picture to be coded***"), by minimizing the "squared sums of border errors" (in total, "***border motion-vector data***" or, "data on a motion vector from a border of the rectangular zone in the picture to be coded to the border of the reference picture thus found"). *Id.*

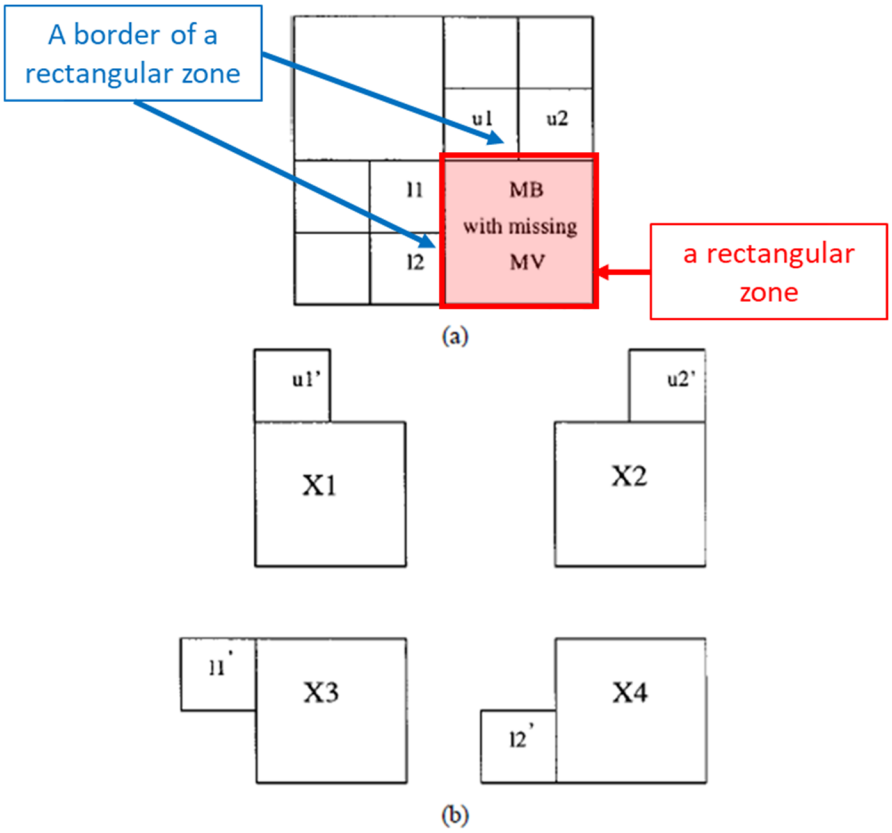

Fig. 1. (a) The four subblocks, (b) their corresponding subblocks in the previous frame, and the blocks connected to them.

SAMSUNG-1005, FIG. 1(a) (annotated and color added).

160. As discussed above, after Shirani's first stage of the hybrid two-stage error concealment technique estimates the pixels at the borders of the missing block, the second stage of the Mualla-Shirani-Saito combination estimates the pixels in the interior of the missing block using Saito's technique for solving Poisson's equation with the border pixels (specifically, Shirani's "border errors" of the missing block) providing boundary conditions in Saito's techniques. *See above*, §VI.E; see below [6.7.COD]. Therefore, because Shirani's first stage temporal concealment uses the motion vectors

of neighboring blocks to estimate only the motion of pixels at the border of the missing block, Shirani discloses the claimed "border motion vector data."

post-quantization data obtained by quantization in the predictive coding

161. Mualla discloses that "quantization is a key element of a video coding system" and illustrates a "quantizer" in its example "video encoder" and "transform coding system." SAMSUNG-1005, 40-42, 52, FIGS. 2.3, 2.9, 3.1. Mualla discloses that, in "transform coding" (also known as "DCT coding"), "coefficients can be quantized according to their visual importance" ("***post-quantization data***"). SAMSUNG-1005, 52, 75.

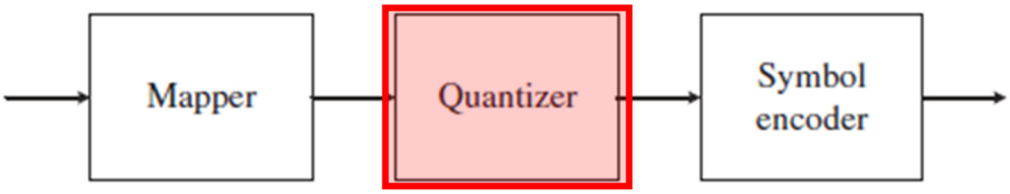

Figure 2.3: Elements of a video encoder

SAMSUNG-1005, FIG. 2.3 (annotated and color added).

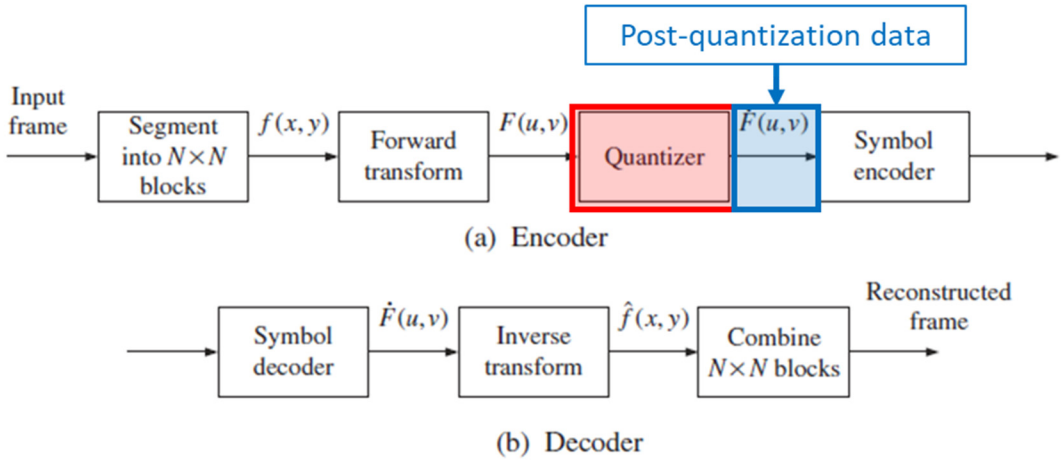

Figure 2.9: Block diagram of a transform coding system

SAMSUNG-1005, FIG. 2.9 (annotated and color added).

162. In particular, Mualla discloses that these coefficients are derived by obtaining a "displaced frame difference (DFD)" that represents "the coded prediction error signal" ("***the predictive coding***"). SAMSUNG-1005, 61, FIG. 2.15. The DFD signal can be coded "using any of the intraframe coding methods discussed in Section 2.6" and "the most commonly used method is transform coding, in particular block-based DCT transform coding." SAMSUNG-1005, 62. Mualla discloses that the DCT transform "is applied to the DFD values" and that this "results in … transform coefficients for each [macro block]." SAMSUNG-1005, 74. These coefficients are then "quantized using a uniform scalar quantizer" ("***post-quantization data obtained by quantization in the predictive coding***"). SAMSUNG-1005, 75, FIG. 3.1. This process is illustrated in Mualla's example "H.263 video encoder."

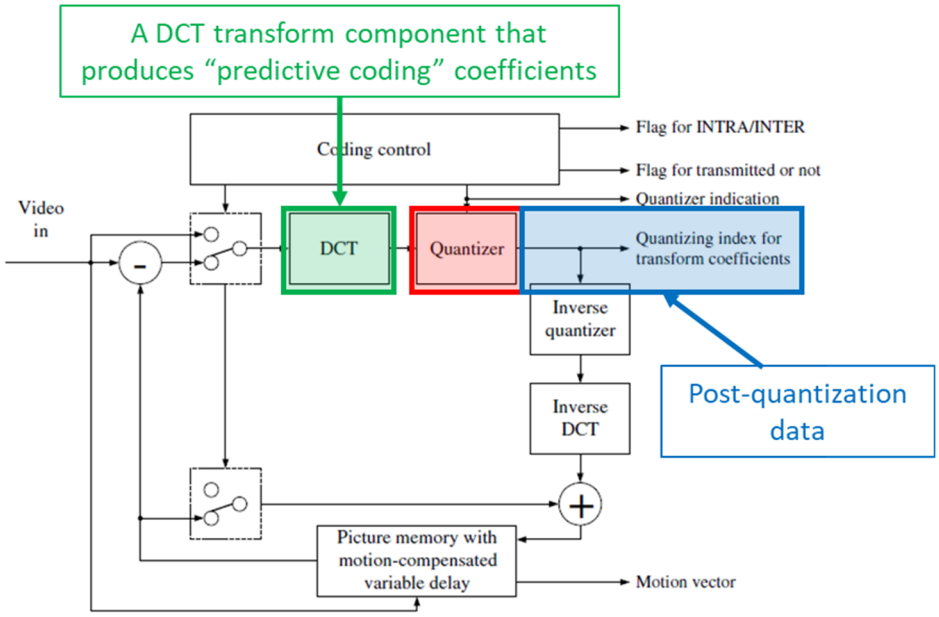

Figure 3.1: H.263 video encoder

SAMSUNG-1005, FIG. 3.1 (annotated and color added).

[6.3.COD] the coded bitstream obtained by producing and encoding a residual picture that is a residual signal between a picture to be coded that is an input moving-picture video signal to be subjected to coding and a predictive picture produced from a reference picture that is a local decoded video signal for each of a plurality of rectangular zones, each composed of a specific number of pixels, into which a video area of the moving-picture video signal is divided,

163. As discussed above in [6.2.COD], Mualla's DFD represents "the coded prediction error signal" ("***residual picture that is a residual signal***") which is created by subtracting a "motion compensation prediction (MCP)," produced from the "reference frame" ("***a predictive picture produced from a reference picture that is a local decoded video signal***"), from the "current frame" ("***a picture to be coded that is an input moving-picture video signal to be subjected to coding***").

SAMSUNG-1005, 26-27, FIG. 1.1. Mualla's "typical video codec" illustrates this process.

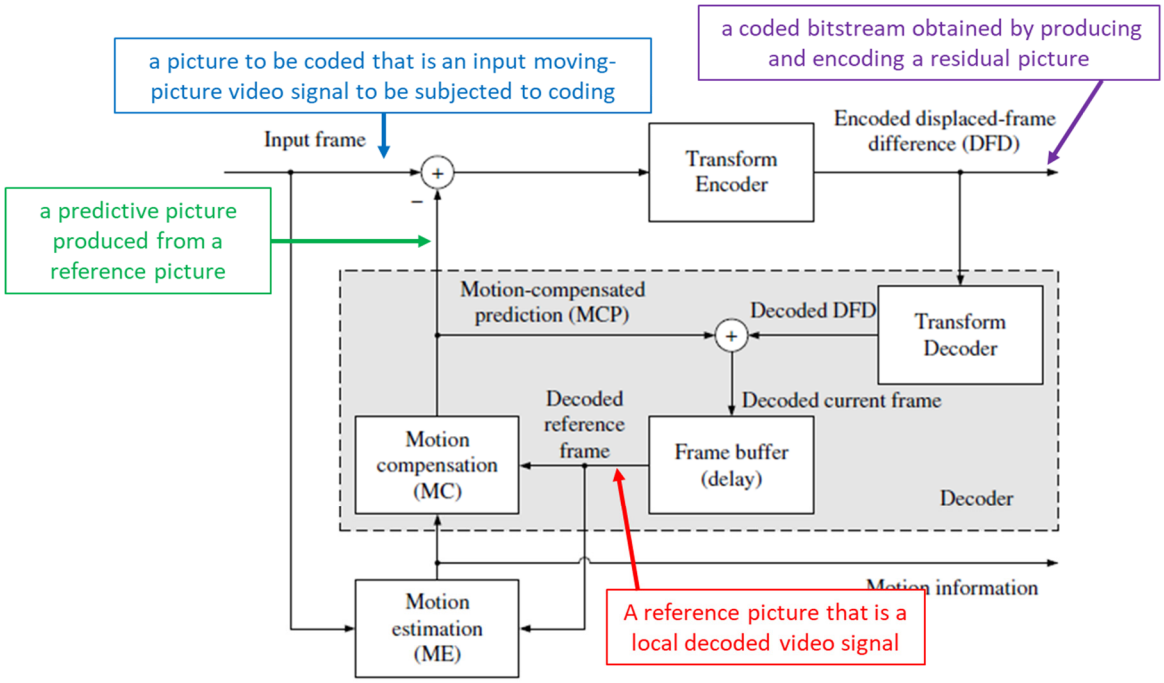

Figure 1.1: Typical video codec

SAMSUNG-1005, FIG. 1.1 (annotated).

164. Mualla also discloses that an input video signal "consists of a sequence of pictures (or frames)" where "[e]ach picture is divided into groups of blocks (GOBs)" and each GOB "is divided into macroblocks (MBs)" ("***each of a plurality of rectangular zones***"). SAMSUNG-1005, 71-72. These MBs are further divided into individual "pixels," or "pels" ("***each composed of a specific number of pixels, into which a video area of the moving-picture video signal is divided***"). SAMSUNG-1005, 36, 71-72, FIG. 3.2. FIG. 3.2 of Mualla illustrates this breakdown.

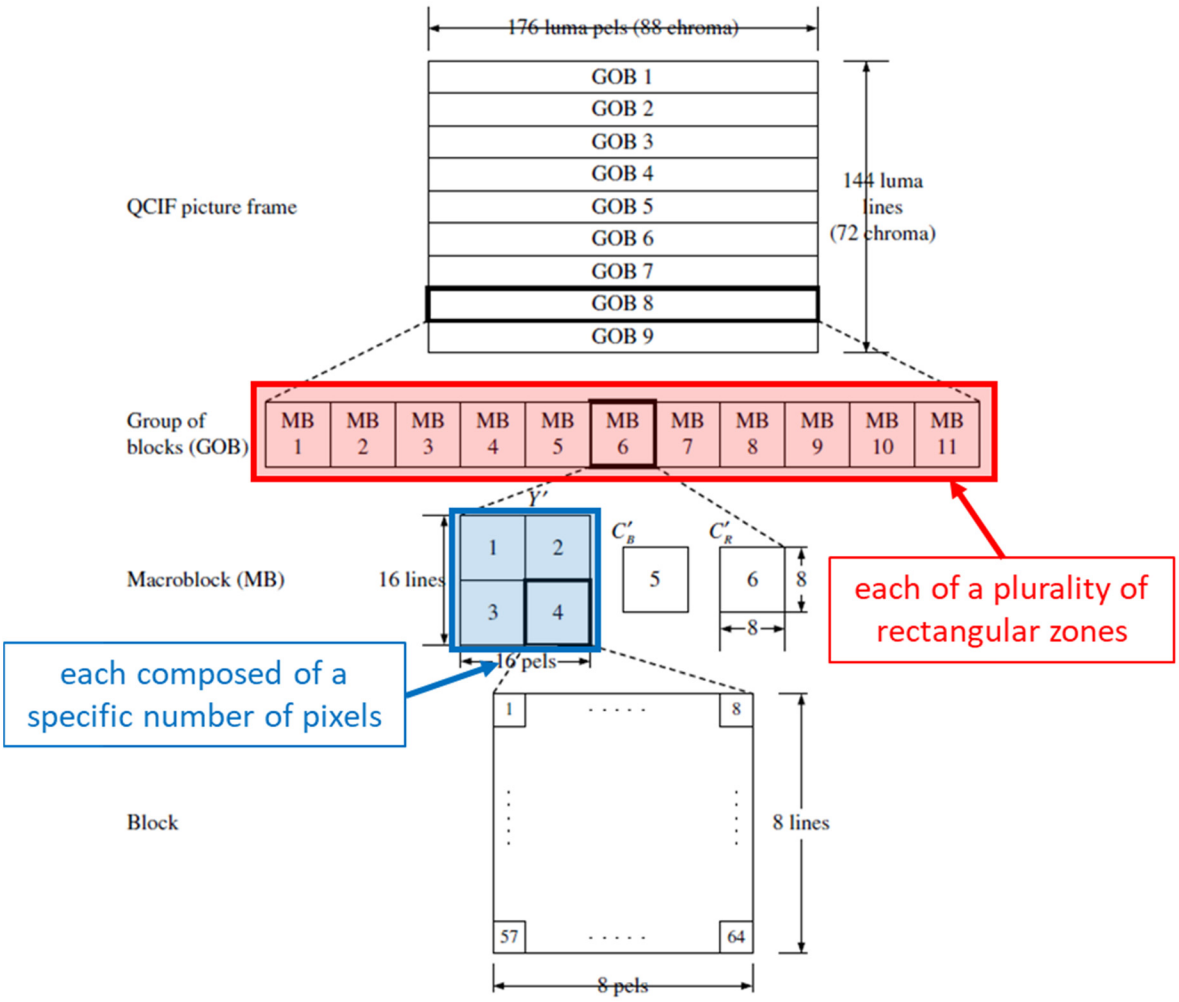

Figure 3.2: H.263 picture structure for a QCIF frame

SAMSUNG-1005, FIG. 3.2 (annotated and color added).

[6.4.COD] obtaining a boundary condition of each of a plurality of borders between the rectangular zones and another plurality of rectangular zones adjacent to the rectangular zones,

165. As discussed above, the Mualla-Shirani-Saito combination implements a two-stage hybrid error concealment in the encoder (as well as the decoder), as taught by Mualla. SAMSUNG-1005, 246-250.

166. In particular, for the first stage, as discussed above in [6.2.COD], Mualla discloses "boundary matching (BM)," a temporal error concealment technique, which selects a "suitable replacement [motion vector] from a set of candidate [neighboring] motion vectors. SAMSUNG-1005, 245; *see above* [6.2.COD]. Shirani's "first stage" of its two-stage error concealment technique applies a similar technique to estimate a missing motion vector by considering "subblocks adjacent to the missing block." SAMSUNG-1006, 2-3, FIG. 1(a); *see above* [6.2.COD].

167. In more detail, Shirani explains that in order to obtain an "initial estimate" for each of the missing blocks ("***the rectangular zones***"), "subblocks adjacent to the missing block, i.e., *u1, u2*, *l*1, and *l*2 in Fig. 1(a), are considered" ("***another plurality of rectangular zones adjacent to the rectangular zones***"). SAMSUNG-1006, 3, FIG. 1(a) (reproduced below).

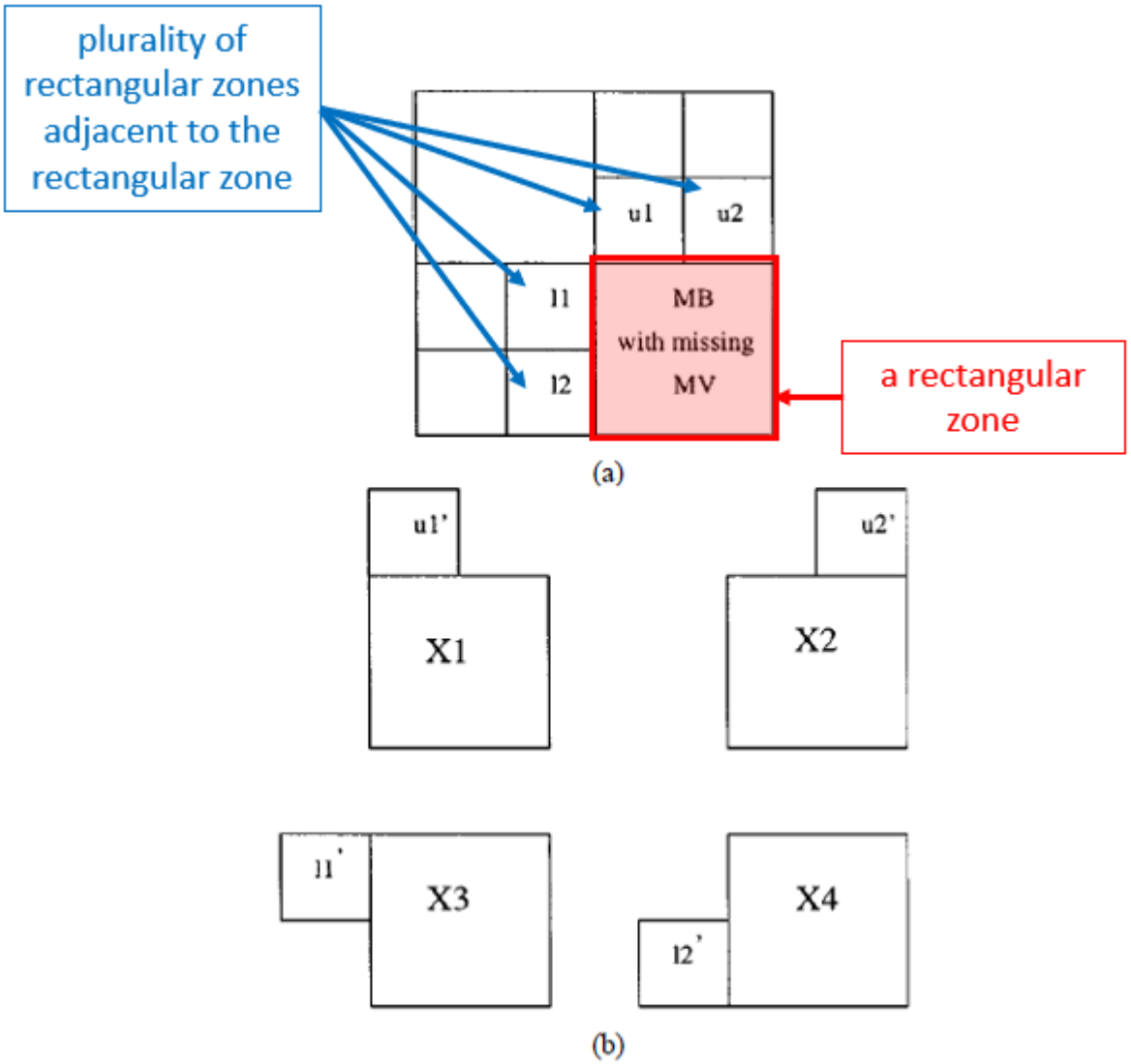

Fig. 1. (a) The four subblocks, (b) their corresponding subblocks in the previous frame, and the blocks connected to them.

SAMSUNG-1006, FIG. 1(a) (annotated and color added).

168. As explained in Section VI.B, above, Shirani discloses that "for each of these subblocks [(*u1, u2*, *l*1, and *l*2)], a corresponding subblock in the previous frame is determined" (denoted *u*1', *u*2', *l*1', and *l*2' at the bottom of FIG. 1(a), above). SAMSUNG-1006, 3. Then, Shirani discloses that "four blocks, namely X1, X2, X3,

and X4, which are connected to *u*1', *u*2', *l*1', and *l*2', and (respectively), are determined" and "a block from the above four blocks [(X1, X2, X3, and X4)] that minimizes the squared sums of border errors, between the estimated block and its adjacent above and left blocks, is selected." SAMSUNG-1006, 3. This is accomplished by defining "border error[s]" in "terms of pixels," including an error for the "bottom line pixels of the block to the top of the missing block" and an error for the "right column pixels of the block to the left of the missing block" and applying the same technique to define border errors for pixels adjacent to "the subblocks ... to the right and below of the missing block" ("***obtaining a boundary condition of each of a plurality of borders between the rectangular zones and another plurality of rectangular zones adjacent to the rectangular zones***"). *Id.* Furthermore, although the above description focused on adjacent subblocks above and to the left of the missing block, Shirani also discloses that "the same method can be extended to include the subblocks of the blocks to the right and below of the missing block" ("... ***of each of a plurality of borders between the rectangular zones and another plurality of rectangular zones adjacent to the rectangular zones***"). *Id.*

169. FIG. 5 of Shirani illustrates an example of how these techniques can be applied to conceal errors for multiple damaged macroblocks (a "***plurality***" of "***rectangular zones***") in a frame. SAMSUNG-1006, FIG. 5.

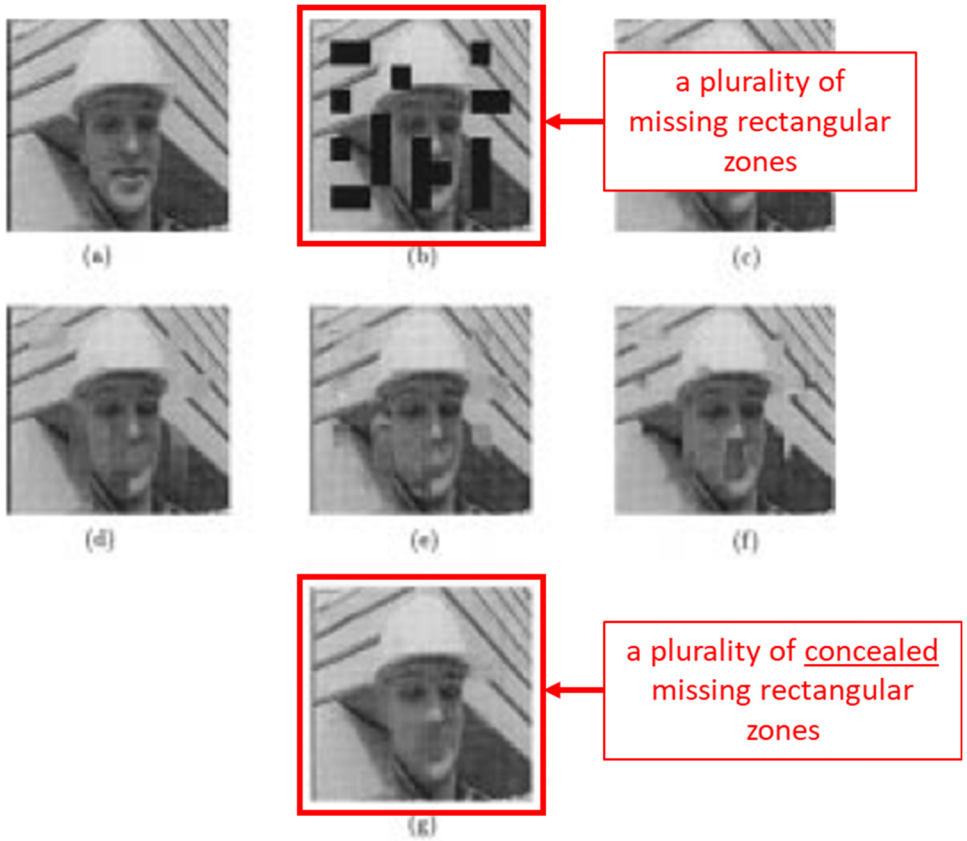

Fig. 5. A frame from the video sequence Foreman: (a) original; (b) missing blocks; reconstructed using (c) a nonadaptive GMRF model; (d) a suboptimal MRF model; (e) the method proposed in [4]; (f) the method proposed in [3]; and (g) our adaptive MRF model.

SAMSUNG-1006, FIG. 5 (annotated).

[6.5.COD] finding a border, of the reference picture, having a boundary condition that matches the boundary condition, by motion-vector search in the reference picture,

170. As discussed above, the Mualla-Shirani-Saito combination implements a two-stage hybrid error concealment in the encoder (as well as the decoder), as taught by Mualla. SAMSUNG-1005, 246-250.

171. In particular, as described above in [6.4.COD], Shirani finds and evaluates the "border error" of a plurality of neighboring subblocks when considering the

suitability of these subblocks in concealing missing or damaged data ("***finding a border, of the reference picture, having a boundary condition that matches the boundary condition***"). SAMSUNG-1006, 2-3, FIG. 1; *see above* [6.2.COD], [6.4.COD]. Additionally, Shirani discloses that the "search for displacement of each of the subblocks is restricted to a set of candidate motion vectors," specifically, "the motion vectors of available neighboring blocks" ("***finding a border … by motion-vector search in the reference picture***"). SAMSUNG-1006, 3, FIG. 1(a); *see above* [6.2.COD], [6.4.COD].

[6.6.COD] and generating the border motion-vector data that is data on a motion vector from a border of the rectangular zone in the picture to be coded to the border of the reference picture thus found, defining a boundary condition of a border that corresponds to the border motion vector data, from the reference picture based on the border motion vector data,

172. As discussed above, the Mualla-Shirani-Saito combination implements a two-stage hybrid error concealment in the encoder (as well as the decoder), as taught by Mualla. SAMSUNG-1005, 246-250.

173. In particular, as described in [6.2.COD], [6.4.COD], and [6.5.COD] above, Shirani's "first stage" temporal error concealment technique searches for candidate replacement motion vectors and generates border errors that define the similarity of the neighboring subblock's motion vector ("***border motion-vector data***"). *See above*, [6.2.COD], [6.4.COD], [6.5.COD]. Indeed, Shirani's "candidate motion vectors" are "***data on a motion vector from a border of the rectangular***

zone in the picture to be coded to the border of the reference picture thus found," at least because these candidate motion vectors conceal missing motion vectors between "***the reference picture***" and "***the picture to be coded***." *Id.*

174. Moreover, as described above, Shirani generates border errors that quantify the similarity of the neighboring subblocks' motion vectors compared to the missing block to be concealed ("***defining a boundary condition of a border that corresponds to the border motion vector data, from the reference picture***"). *See above*, [6.4.COD], [6.5.COD]. Shirani's border errors evaluate the similarity of the neighboring subblocks' motion vectors, so they are therefore "***based on the border motion vector data***" of the neighboring subblocks. *Id.*

[6.7.COD] and generating an estimated video signal in each rectangular zone in the picture to be coded, that satisfies Poisson's Equation, thus producing the predictive picture;

175. As discussed above, the Mualla-Shirani-Saito combination implements a two-stage hybrid error concealment in the encoder (as well as the decoder), as taught by Mualla. SAMSUNG-1005, 246-250.

176. In particular, as described above in [6.6.COD], Shirani generates ***border motion-vector data*** for each damaged or missing subblock. *See above*, [6.2.COD], [6.4.COD]-[6.6.COD]. Additionally, the "second stage" of the Mualla-Shirani-Saito combination (similar to the "spatial error concealment" methods of Mualla) uses "the information around each missing block … to refine the initial estimate" (as taught by

Shirani) by using Saito's technique for solving Poisson's equation with known boundary conditions. SAMSUNG-1006, 3; SAMSUNG-1007, 27; *see above* §§VI.B, VI.C, VI.E.

177. As discussed above in the combination, a POSITA would have recognized and found obvious that Saito's image approximation techniques based on solving Poisson's equation would have enhanced Shirani's "second stage" techniques, "improv[ing] the video reconstruction quality" in order to achieve similar goals of image approximation. SAMSUNG-1007, 27; SAMSUNG-1006, Abstract, 3. Saito's Polyharmonic Local Cosine Transform (PHLCT) is an enhancement of a Polyharmonic Local Sine Transform (PHLST) technique for image approximation. SAMSUNG-1007, Abstract, 27. Saito discloses that the PHLST method "segments an image into local pieces using … characteristic functions, then decomposes each piece into two components: the polyharmonic component and the residual." SAMSUNG-1007, Abstract, 4. Saito explains that the polyharmonic component is "obtained by solving the elliptic boundary value problem associated with the so-called polyharmonic equation (e.g., Laplace's equation, biharmonic equation, etc.) given the boundary values (the pixel values along the boundary created by the characteristic function)." *Id.* The PHLCT variation of PHLST approximates an image between two boundaries by "solv[ing] the … Poisson equation with the Neumann boundary condition" ("***generating an estimated video signal in each rectangular zone in the picture to be coded, that satisfies Poisson's Equation***"). SAMSUNG-1007, 27.

178. In implementing Saito's teachings into the Mualla-Shirani combination, a POSITA would have recognized and found obvious that the "border errors" of Shirani are suitable to use as the "Neumann boundary condition" for Saito's the PHLCT method, and that PHLCT would have been capable of approximating the image between these boundary conditions ("***thus producing the predictive picture***"). SAMSUNG-1007, 27 ("this method of course requires to estimate the **first order normal derivative** of data at the **boundary**"). Indeed, as described above, Saito's techniques represent a natural improvement of image approximation techniques, at least because they can achieve a faster "decay rate" for the error signal at the boundaries of blocks – an improvement that is consistent with the goals of Mualla-Shirani. SAMSUNG-1007, 27; SAMSUNG-1006, Abstract, 3.

179. Moreover, Saito's process of PHLCT is described by the '025 patent itself, and the '025 patent cites a subsequent publication by Dr. Naoki Saito that explains the PHLCT method. SAMSUNG-1001, Cover, 11:34-12:25.

[6.8.DEC] an entropy decoder to perform entropy decoding to the data thus demultiplexed to generate, at least, motion-vector data, the post-quantization data, the border motion-vector data and parameter data required for constructing a specific syntax structure;

180. As discussed above in [6.2.COD], Mualla-Shirani-Saito discloses "***border motion-vector data***" and "***post-quantization data***." *See above*, [6.2.COD]. In particular, as discussed above, the first stage of Shirani's two-stage hybrid error concealment technique uses motion vectors of "neighboring blocks" ("***border motion-***

vector data") to estimate motion vectors of subblocks adjacent to the missing block. SAMSUNG-1006, 3. Furthermore, as discussed in Section VI.A, above, the motion vectors of these neighboring blocks ("***border motion-vector data***") are encoded and transmitted to the decoder. In particular, when a frame of video is encoded, Mualla explains that all the macroblocks in the frame are "coded from left to right (and from top to bottom if the GOB contains more than one row of MBs) in increasing number." SAMSUNG-1005, 71, Figure 3.2. The motion vector information for the macroblocks are then "entropy coded" and output from the encoder as encoded motion information. SAMSUNG-1005, 74. Because the encoding and transmission of motion vector information is performed for all macroblocks in a frame/picture, Mualla teaches that the motion vectors of neighboring blocks ("***border motion-vector data***") around a missing block are encoded and transmitted to the decoder, and can be used by the decoder to perform temporal error concealment in Shirani's first-stage.

181. Mualla-Shirani-Saito also discloses conventional "***motion vector data***." *See above*, VI.A; *see below*, [6.14.DEC]. As discussed above, Mualla encodes and transmits motion information for each macroblock in a frame, which includes motion information for the macroblock being decoded ("***motion vector data***") as well as motion information for neighboring blocks ("***border motion-vector data***") which can be used for error concealment in case the macroblock being decoded is received in error or corrupted. SAMSUNG-1005, 71, 74.

182. In particular, a POSITA would have understood or found obvious that, in the system of Mualla-Shirani-Saito, motion information for a macroblock being decoded ("***motion vector data***") can be received and decoded, even if the macroblock is detected as having errors. For example, Mualla explains that a macroblock is detected as having an "error" if the "**decoded motion vector** points outside the permissible range." SAMSUNG-1005, 232; 244 (explaining that "the motion vector of a damaged block is usually lost or **erroneously received**" and disclosing techniques for recovering a "damaged motion vector"); *see also* Girod, 4 ("Transmission errors can be detected in a variety of ways ... **detect** that the **decoded motion vectors**, DCT coefficients, or quantizer step sizes **exceed their permissible range** (semantic violations)"). In view of these teachings, even if a macroblock is detected as having errors, and even if a particular example disclosed in Mualla or Shirani refers to motion vectors as "missing," "lost," or "not available," a POSITA would have understood or found obvious that the techniques of Mualla and Shirani are applicable to motion vectors ("***motion vector data***") that are received and decoded and detected as having errors. As such, a POSITA would have understood or found obvious that, according to the teachings of Mualla and Shirani, "motion vector data" for a macroblock is received and decoded regardless of whether the macroblock is detected as having errors (in which case the motion vectors are received and decoded with errors) or without errors (in which case the motion vectors are received and decoded without errors).

183. As discussed in [6.1.DEC], above, Mualla-Shirani-Saito includes a multiplexer that "demultiplex[es]" received data. In addition, Mualla-Shirani-Saito implements an entropy decoder to perform entropy decoding on the demultiplexed data. *See above*, [6.1.DEC]. In particular, Mualla also discloses an "***entropy decoder***" in a "[t]ypical video communication system" that "obtain[s] the output video" ("***generate … motion-vector data, the post-quantization data, the border motion-vector data and parameter data required for constructing a specific syntax structure***"). SAMSUNG-1005, 227-228, FIG. 9.1. Illustrated below is Mualla's typical video communication system.

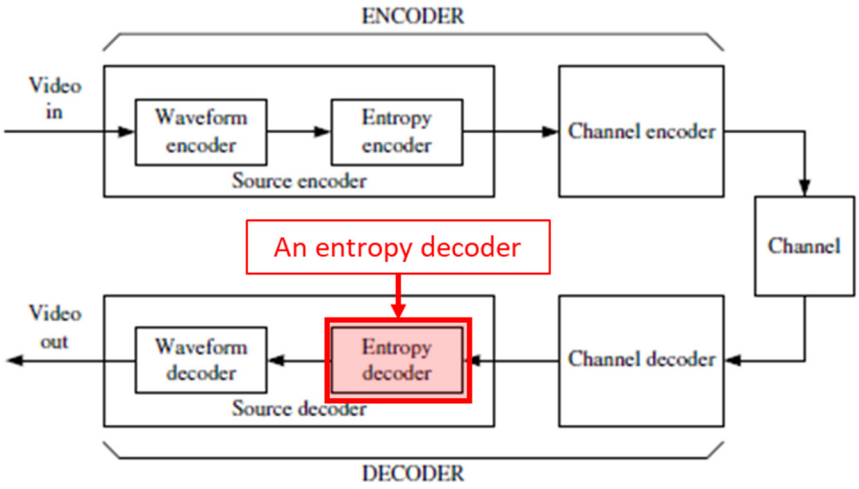

Figure 9.1: Typical video communication system

SAMSUNG-1005, FIG. 9.1 (annotated and color added).

[6.9.DEC] an inverse-quantizer to perform inverse-quantization to the post-quantization data to generate post-quantization orthogonal transform coefficients data;

184. Mualla discloses that the H.263 standard includes the techniques of inverse-quantization. SAMSUNG-1005, 51-52, 76. Specifically, Mualla discloses that "quantization is achieved by dividing the transform coefficient by a quantization step size and rounding the result ("***post-quantization data***") … [i]nverse quantization is the process of reconstructing an approximation of the original coefficient by multiplying the quantized coefficient by the same step size" ("***inverse-quantization to the post-quantization data to generate post-quantization orthogonal transform coefficients data***"). SAMSUNG-1005, 76. Mualla illustrates an "***inverse quantizer***" in its example H.263 video encoder. SAMSUNG-1005, FIG. 3.1. A POSITA would have recognized and found obvious that a similar component would have been included in the decoder of a codec.

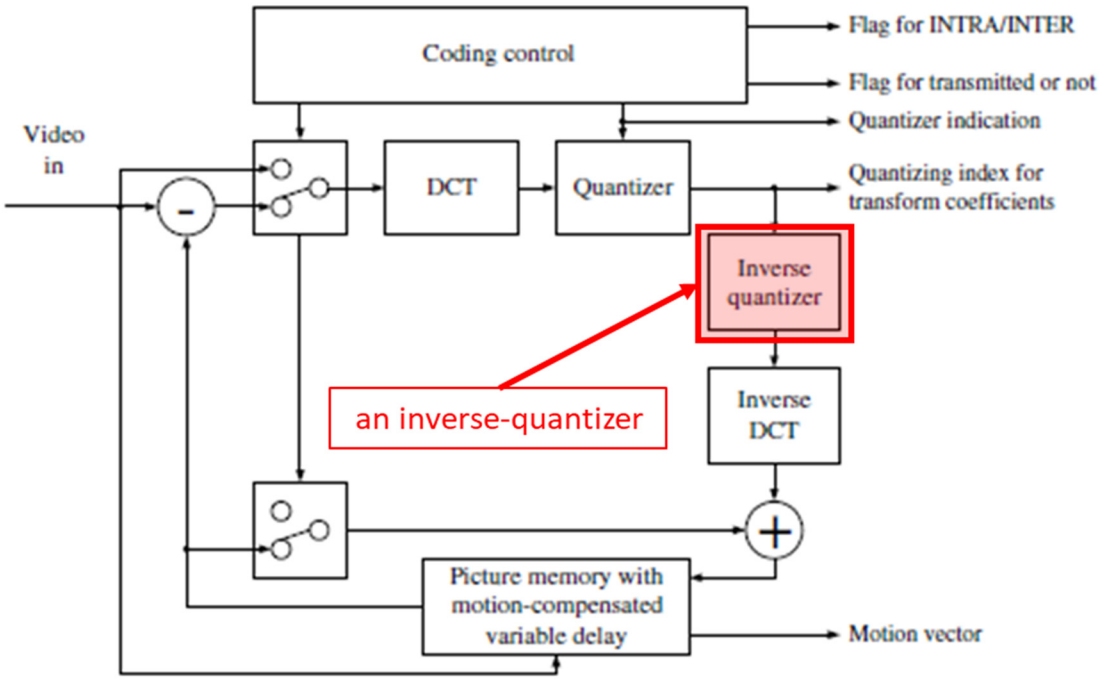

Figure 3.1: H.263 video encoder

SAMSUNG-1005, FIG. 3.1 (annotated and color added).

185. Moreover, a POSITA would have recognized or found obvious that the decoder would "***perform inverse quantization***," for example, by using an "***inverse-quantizer***," as this was well-known before the Critical Date. Indeed, Girod corroborates the use of "inverse-quantizer[s]" in H.263 decoders and illustrates this component in its example H.263 decoder. SAMSUNG-1008, 2, FIG. 1(b)

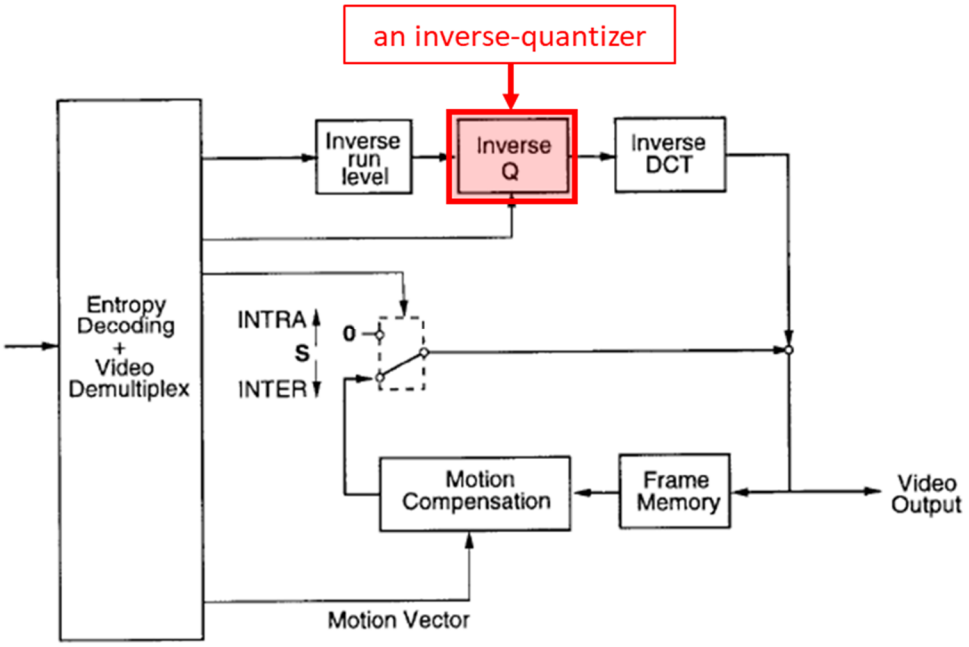

SAMSUNG-1008, FIG. 1(b) (annotated and color added).

[6.10.DEC] an inverse-orthogonal transformer to perform inverse-orthogonal transform to the post-quantization orthogonal transform coefficients data to produce a decoded residual picture of one video area;

186. As discussed in Section VI.A, above, Mualla discloses that the H.263 standard includes the techniques of inverse-orthogonal transforms. SAMSUNG-1005, 51-52, 76. Specifically, Mualla discloses the encoder performs "transform coding" where a "unitary space-frequency transform is applied to each block [in an input frame] to produce an N × N block of transform (spectral) coefficients that are then suitably quantized" ("***post-quantization orthogonal transform coefficients data***"). SAMSUNG-1005, 52, FIG. 2.9. Next, at the decoder, "an inverse transform is applied to reconstruct the frame" ("***an inverse-orthogonal transformer to perform inverse-orthogonal transform to the post-quantization orthogonal transform coefficients***

data"). *Id.* FIG. 2.9 of Mualla illustrates an "[i]nverse transform" component in an example "transform coding system." *Id.*

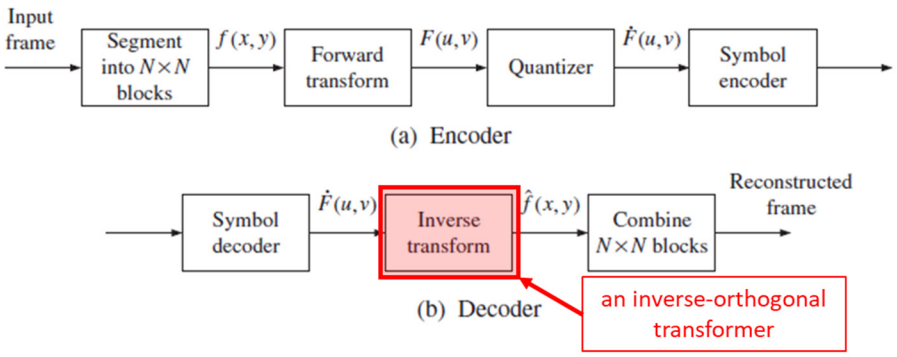

Figure 2.9: Block diagram of a transform coding system

SAMSUNG-1005, FIG. 2.9 (annotated and color added).

187. Moreover, a POSITA would have recognized or found obvious that the decoder would include an "***inverse-orthogonal transformer***" as this was well-known in the art before the Critical Date. Indeed, Girod corroborates the use of inverse transforms in H.263 decoders. SAMSUNG-1008, 2, FIG. 1(b).

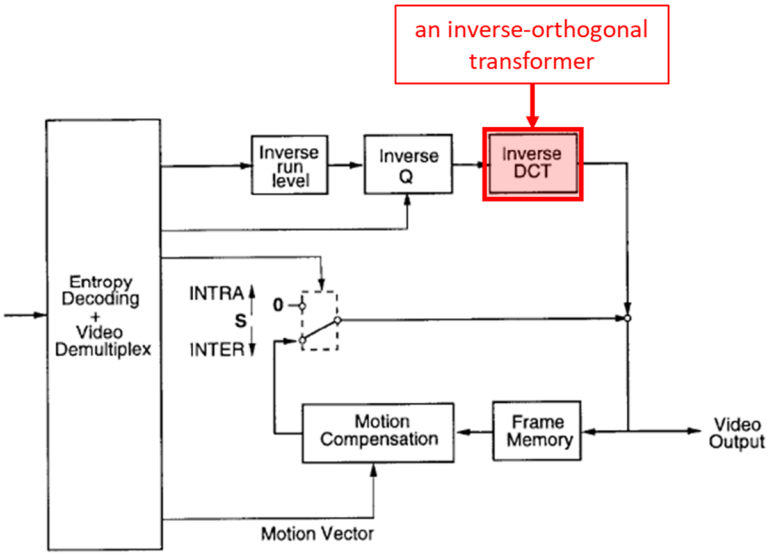

SAMSUNG-1005, FIG. 1(b) (annotated and color added).

[6.11.DEC] a zone-border motion compensator to define a boundary condition of a border that corresponds to the border motion vector data, from the reference picture based on the border motion-vector data, and generate an estimated video signal in each rectangular zone in the picture to be coded, that satisfies Poisson's Equation, thus producing a first predictive picture;

188. As discussed above, the Mualla-Shirani-Saito combination implements a two-stage hybrid error concealment in **both** the **encoder** and the **decoder** by using "interactive techniques," as taught by Mualla. SAMSUNG-1005, 246-250. As described above in [6.2.COD] and [6.6.COD]-[6.7.COD], the **encoder** of the Mualla-Shirani-Saito combination defines "***a boundary condition of a border that corresponds to the border motion vector data, from the reference picture based on the border motion vector data***" and "***generate[s] an estimated video signal in each rectangular zone in the picture to be coded, that satisfies Poisson's Equation, thus producing a first predictive picture***." *See above*, [6.2.COD], [6.6.COD]-[6.7.COD]. Thus, a POSITA would have understood or found obvious that the **decoder** of the Mualla-Shirani-Saito combination would perform analogous operations by using the same two-stage hybrid error concealment technique.

189. Furthermore, Mualla refers to the first-stage temporal concealment as "**motion-compensated** error concealment." SAMSUNG-1005, 27. Mualla explains that "[**a]s in motion-compensated prediction**, the process of temporal concealment involves two stages: *concealment displacement estimation* and *displacement compensation*, as shown in Figure 9.8(a). For this reason, temporal concealment is sometimes referred to

as **motion-compensated concealment**." SAMSUNG-1005, 243, Figure 9.8(a) (reproduced below, annotated).

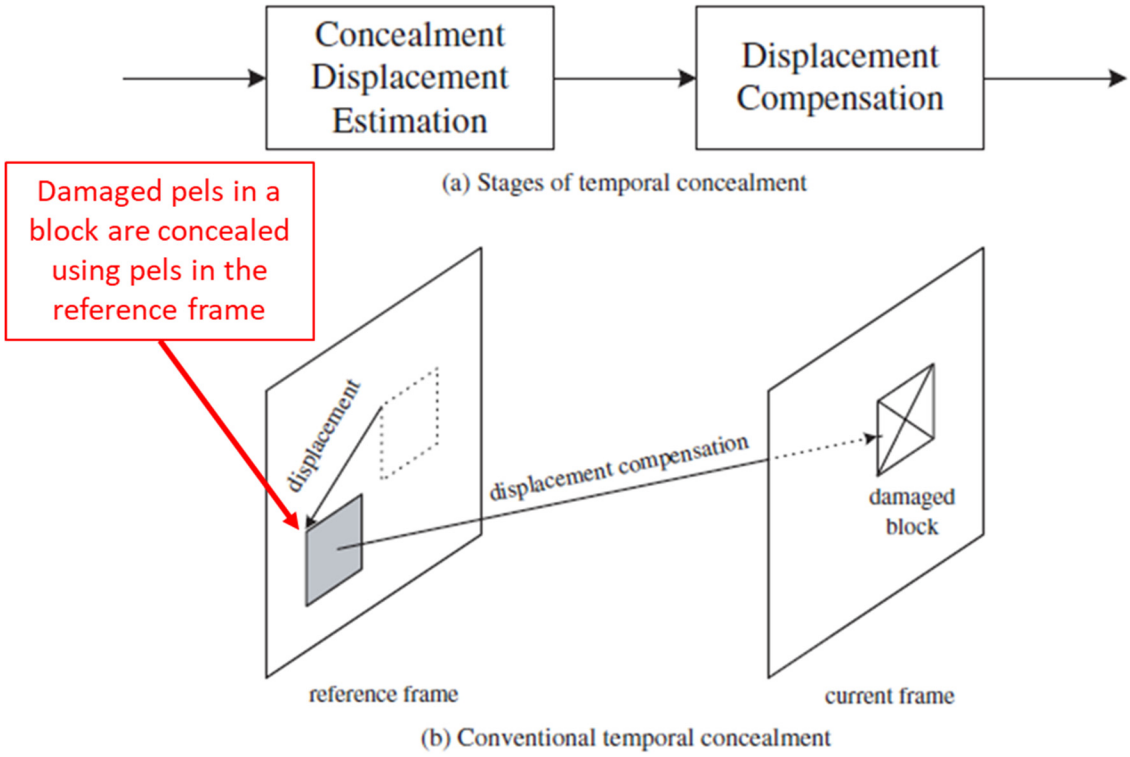

Figure 9.8: Temporal error concealment

SAMSUNG-1005, FIG. 9.8 (annotated).

190. Moreover, the additional techniques of Shirani and Saito are simply 'algorithms' that can be executed by computer program modules ("***a zone-border motion compensator***"). SAMSUNG-1006, 1-2; SAMSUNG-1007, 6. Therefore, the encoding features discussed in encoding limitations [6.2.COD], [6.6.COD]-[6.7.COD] would be similarly implemented within the decoder of Mualla-Shirani-Saito.

191. Thus, a POSITA would have understood or found obvious that the **decoder** of the Mualla-Shirani-Saito combination implements "motion compensated

error concealment techniques" as part of a two-stage hybrid "error concealment" algorithm (the claimed "***zone-border motion compensator***"), which includes a first-stage temporal concealment stage (which defines "***a boundary condition of a border that corresponds to the border motion vector data, from the reference picture based on the border motion vector data***") and a second-stage spatial concealment stage (which "***generate[s] an estimated video signal in each rectangular zone in the picture to be coded, that satisfies Poisson's Equation, thus producing a first predictive picture***").

[6.12.DEC] a combiner to combine the first predictive picture and the decoded residual picture to generate a decoded moving picture signal;

192. Mualla describes a well-known decoding process in which a "prediction" ("***the first predictive picture***") generated by motion-estimation and motion-compensation (the "***zone border motion compensation***" of Mualla-Shirani-Saito) is "added to" (or summed with) ("***combine the first predictive picture and the decoded residual picture***") an "error signal" ("***the decoded residual picture***"), which is the result of inverse DCT, to "reconstruct the current frame" ("***generate a decoded moving picture signal***"). SAMSUNG-1005, 27, 76, FIG. 10.8; *see above* [6.6.11.DEC]. Indeed, Mualla's error concealment technique "***generate[s] a decoded moving picture signal***" by concealing missing/erroneous/damaged blocks, as shown in Figure 10.8. *Id.*

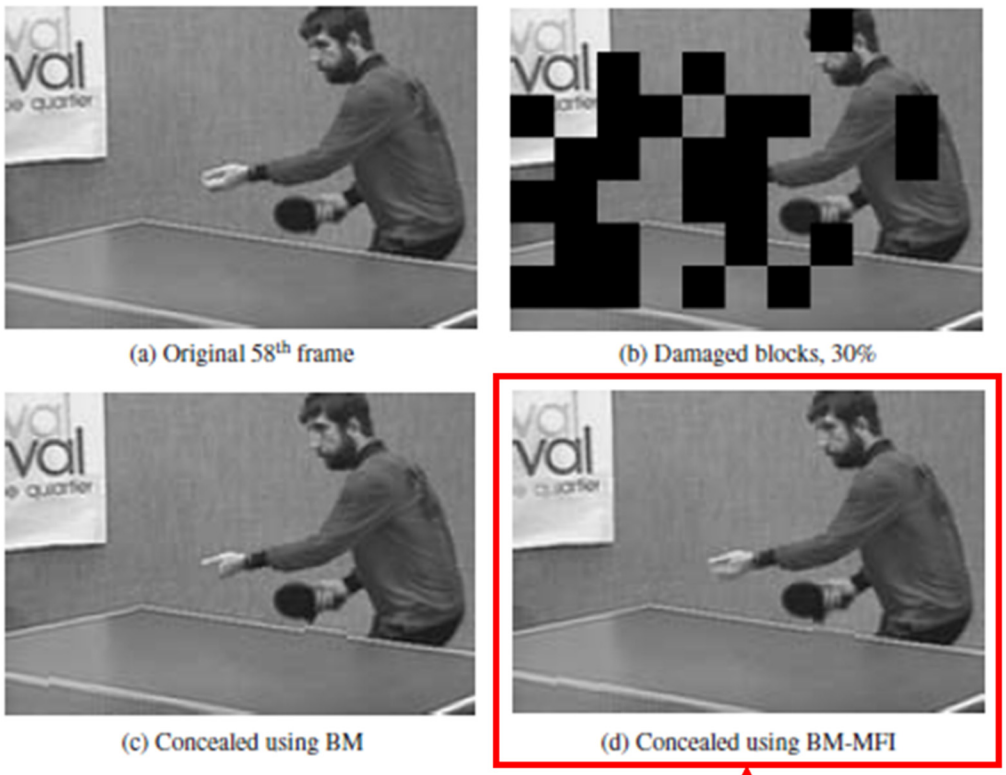

Figure 10.8: Subjective quality of concealed 58th frame of QSIF Table Tennis at 30 frames/s with a block loss rate of 30%

combin[ing] the first predictive picture and the decoded residual picture to generate a decoded moving picture signal

SAMSUNG-1005, FIG. 10.8 (annotated).

193. Thus, for a given frame (picture) that is being decoded, (i) coded data for some macroblocks of the frame are received without error and are decoded using Mualla's conventional "motion estimation" and "motion compensation," whereas (ii) coded data for other macroblocks of the frame are erroneously received and concealed using the Mualla-Shirani-Saito two-stage hybrid error concealment technique. The result is an aggregate predicted frame ("***the first predictive picture***") that is combined with Mualla's "decoded [displaced-frame difference] DFD" ("***the decoded residual***

picture"). The combining technique is analogous to the combining technique implemented in Mualla's conventional motion-estimation-compensation decoding. SAMSUNG-1005, FIG. 1.1.

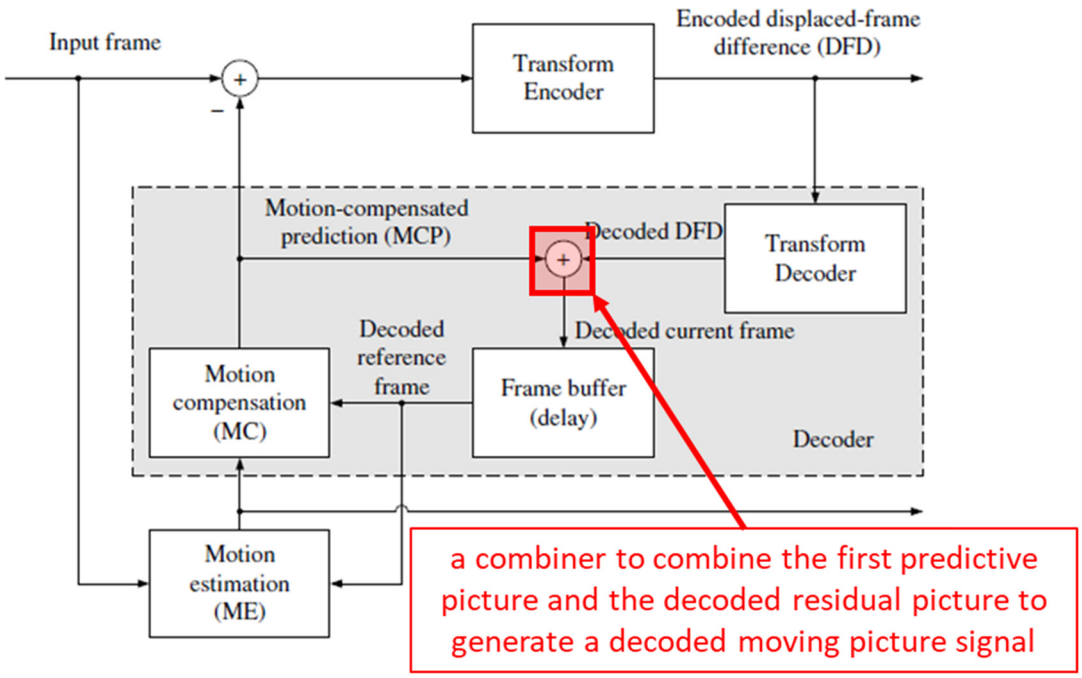

Figure 1.1: Typical video codec

SAMSUNG-1005, FIG. 1.1 (annotated and color added).

194. A detailed example of such a combining step for error concealment is provided in Stockhammer (SAMSUNG-1009), which discloses an example of error concealment implemented in an H.264-based system in Figure 9.8 (reproduced below, annotated). As discussed in Section VI.A, above, decoding is performed on a per-macroblock basis. For a given macroblock of the frame, if an error is detected in the coded data of the macroblock, then the decoder performs "error concealment" and the second selector at the bottom-right-hand corner of the red shaded area is in the upper-

most position and provides the error concealment output (the "***first predictive picture***") to a combiner (annotated). SAMSUNG-1009, 8, Fig. 6 (reproduced below, annotated). As shown in Fig. 6, the other input to the combiner is the output of the "dequantizer/inverse transform." *Id.* As explained in [6.9.DEC] and [6.10.DEC], the output of dequantizer/inverse transform is a "***decoded residual picture***."

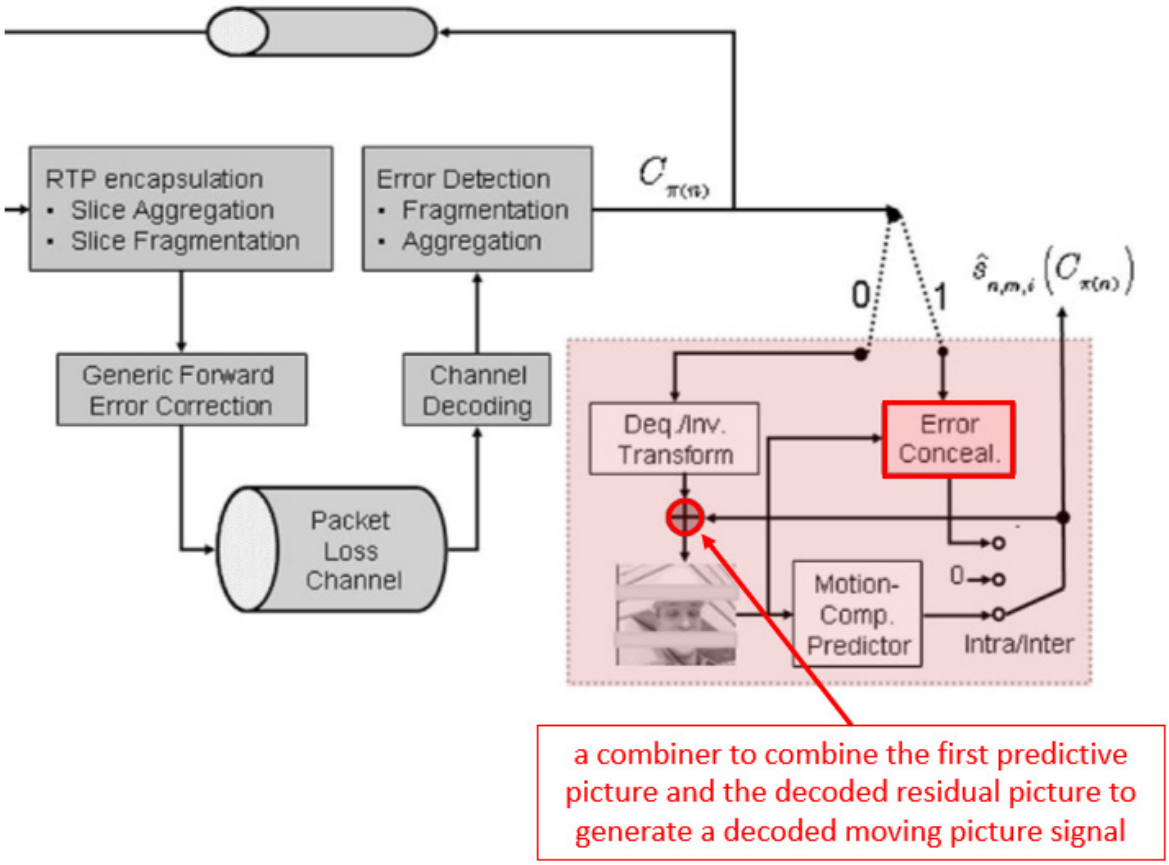

SAMSUNG-1009, FIG. 6 (annotated and color added).

195. Conversely, if no errors are detected in the coded data of the macroblock, then the decoder applies the conventional "motion compensated predictor" and the second selector at the bottom-right-hand corner of the red shaded area is in the lower-

most position and provides the output of the motion compensated predictor to the combiner (annotated). SAMSUNG-1009, 8, Fig. 6.

196. Ultimately, for all macroblocks in the frame (both those received in error and without error), the decoder generates reconstructed samples $\hat{s}_{n,m,i}(o, C_{\pi(n)})$that form a reconstructed image (the "***decoded moving picture signal***").

[6.13.DEC] a memory to store the decoded moving-picture signal for at least one picture as a reference picture;

197. Mualla describes the well-known feature of a decoder including a "***memory***" to store a "***reference picture***" which is the "***decoded moving-picture signal***" that was generated by combining the residual picture and the predictive picture. SAMSUNG-1005, 26-27, FIG. 1.1; *see above*, [6.12.DEC]. For example, Mualla discloses that "reference frame[s]" ("***reference picture[s]***") are "stored in a frame buffer" ("***a memory***"). *Id.*

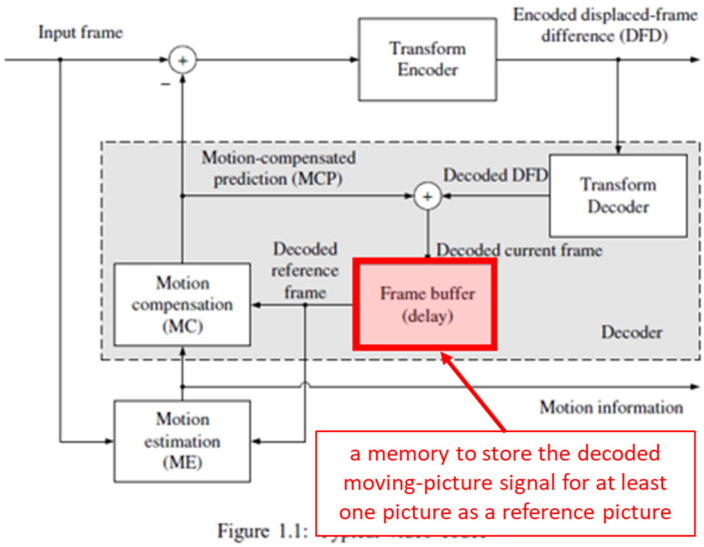

SAMSUNG-1005, FIG. 1.1 (annotated and color added).

198. Additionally, the use of a "***memory***" to "***store … a reference picture***" was well-known in the art before the Critical Date. For example, Girod discloses that a H.263 decoder includes a "frame memory" which stores "decoded frames." SAMSUNG-1008, 2.

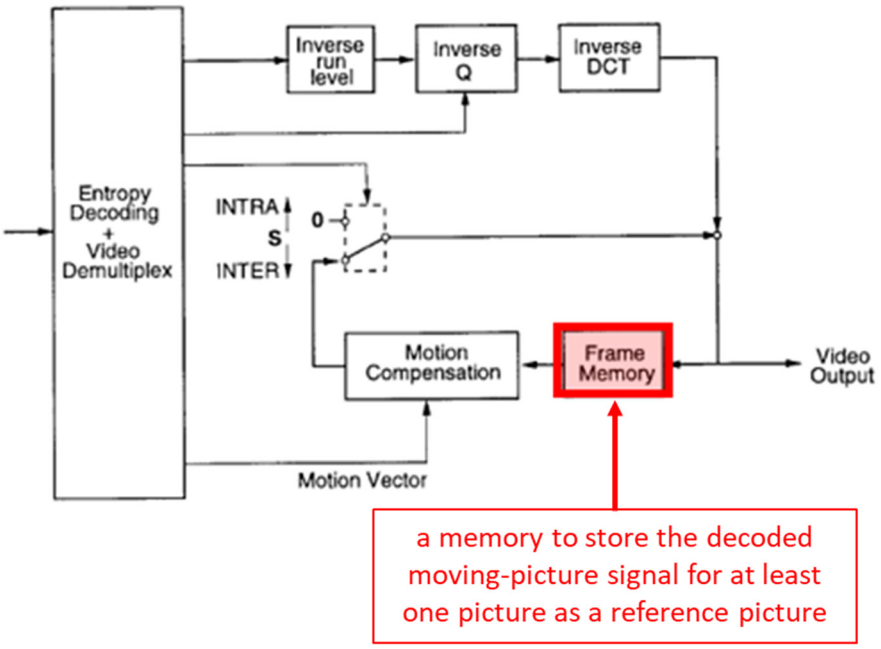

SAMSUNG-1008, FIG. 1(b) (annotated and color added).

[6.14.DEC] a motion compensator to specify a corresponding rectangular zone in the reference picture based on the motion vector data, thus generating a second predictive picture;

199. Mualla's "typical video codec" includes the well-known feature of "motion compensation." SAMSUNG-1005, 26-27, 76, 115-116, FIG. 1.1, 2.16. Indeed, Mualla discloses that a "motion estimation (ME) block uses a motion model to estimate the movement that occurred between [a] current frame and a reference frame" ("***specify a corresponding rectangular zone in the reference picture based on the***

motion vector data"). SAMSUNG-1005, 26-27, 116-117. Then, "[a]t the decoder, the same reference frame is used along with the received motion information to produce the same prediction" ("***thus generating a second predictive picture***"). *Id.* FIG. 1.1 below illustrates motion compensation in Mualla's typical video codec.

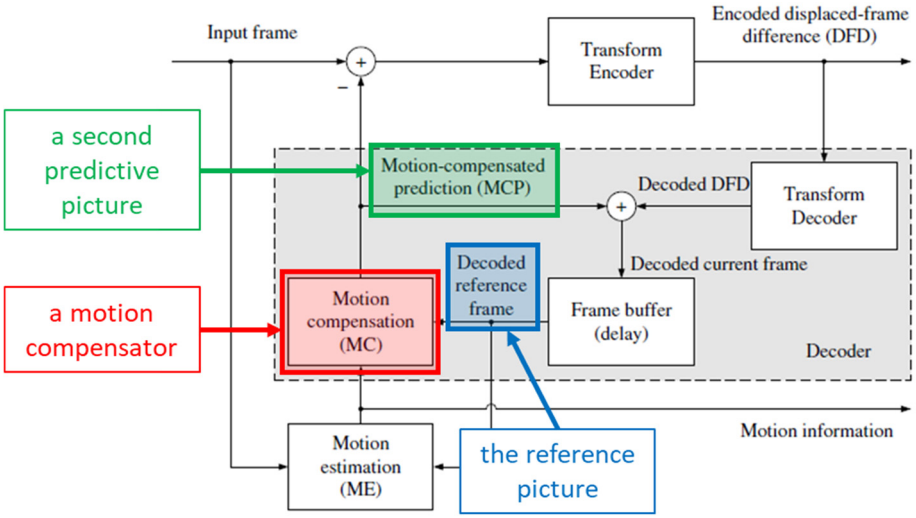

Figure 1.1: Typical video codec

SAMSUNG-1005, FIG. 1.1 (annotated and color added).

200. Additionally, Mualla discloses a process of using a "motion vector" ("***based on the motion vector data***") to determine a "block" in the reference frame ("***a corresponding rectangular zone in the reference picture***") that matches the current frame. SAMSUNG-1005, 76. This process is illustrated in FIG. 2.16 below.

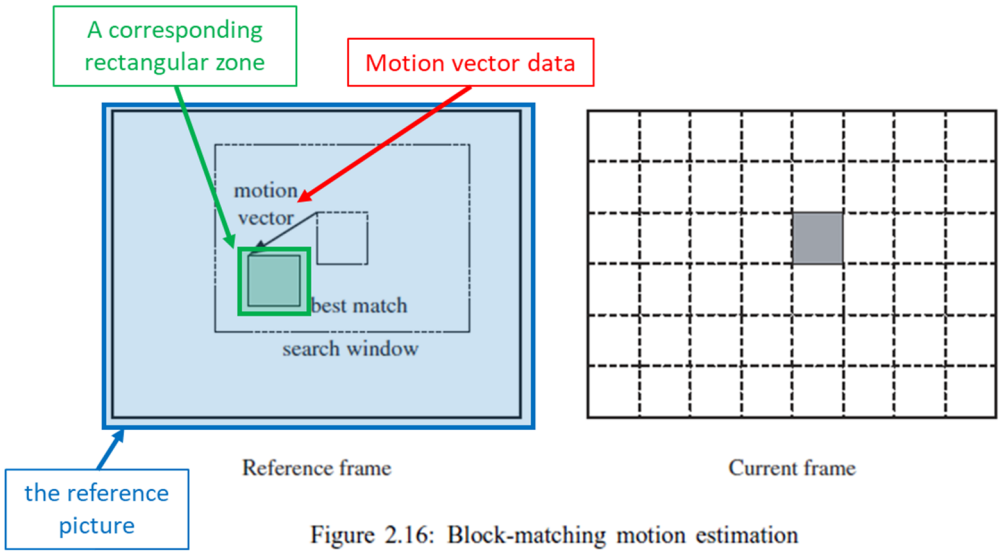

SAMSUNG-1005, FIG. 2.16 (annotated and color added).

201. Moreover, the techniques of motion compensation were well-known before the Critical Date. Indeed, Shirani describes the use of "motion compensation" ("***a motion compensator***") and "motion vectors" ("***motion vector data***") to identify "motion compensated blocks" ("***a corresponding rectangular zone in the reference picture***"). SAMSUNG-1006, 1-2.

[6.15.DEC] a selector to select either the first predictive picture or the second predictive picture and supply the predictive picture thus selected to the combiner; and

202. Mualla discloses that its error concealment techniques can be deployed "[w]hen an error is detected," and that during this period, the "decoding process is stopped." SAMSUNG-1005, 265. From at least this disclosure, a POSITA would have recognized and found obvious that tradition motion compensation (producing a "***second predictive picture***") would execute until an error was detected by the decoder

in the bitstream, at which point the error concealment techniques of the Mualla-Shirani-Saito combination would be used to generate replacement motion vector and video data (a "***first predictive picture***"). SAMSUNG-1005, 265.

203. A POSITA would have recognized or found obvious that switching between these two methods of decoding ("***select[ing] either the first predictive picture or the second predictive picture***") would be effectuated by a switching component, such as a "***selector***." Indeed, Girod (cited by Mualla) corroborates selecting between two different decoding modes in response to detected errors, as "an erroneous bit stream cannot be gracefully decoded by an 'off-the-shelf' video decoder build [sic] for error-free transmission." SAMSUNG-1008, 4. Girod explains that, in the case of errors, "[s]pecial provisions for error detection, resynchronization, and concealment are required." *Id.* Stockhammer[5] also corroborates the use of a "selector" to switch between traditional motion compensation and error concealment. SAMSUNG-1009, FIG. 6.

[5] Although Stockhammer's teachings are within the general knowledge of a POSITA, a POSITA would have additionally combined Stockhammer into the Mualla-Shirani-Saito combination for the reasons discussed above. *See above*, §VI.A-E.

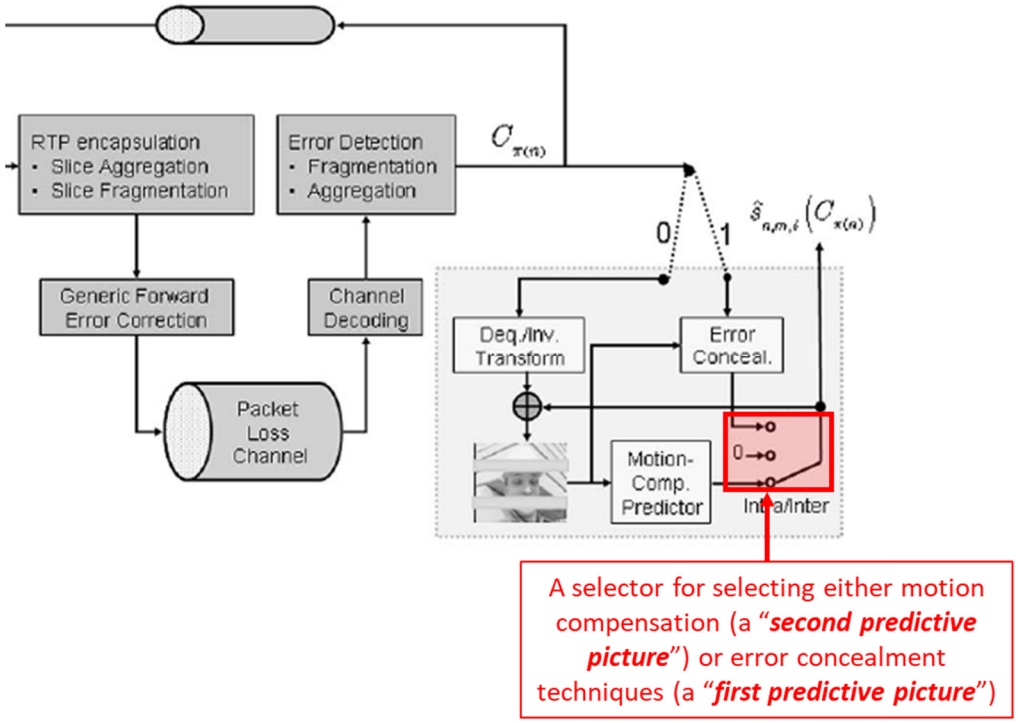

SAMSUNG-1009, FIG. 6 (annotated and color added).

204. Moreover, Mualla uses a "***selector***" to control inter or intra coding. SAMSUNG-1005, 72, FIG. 3.1. Using a selector to switch between normal decoding and error concealment "would have been a natural extension of techniques disclosed within Mualla."

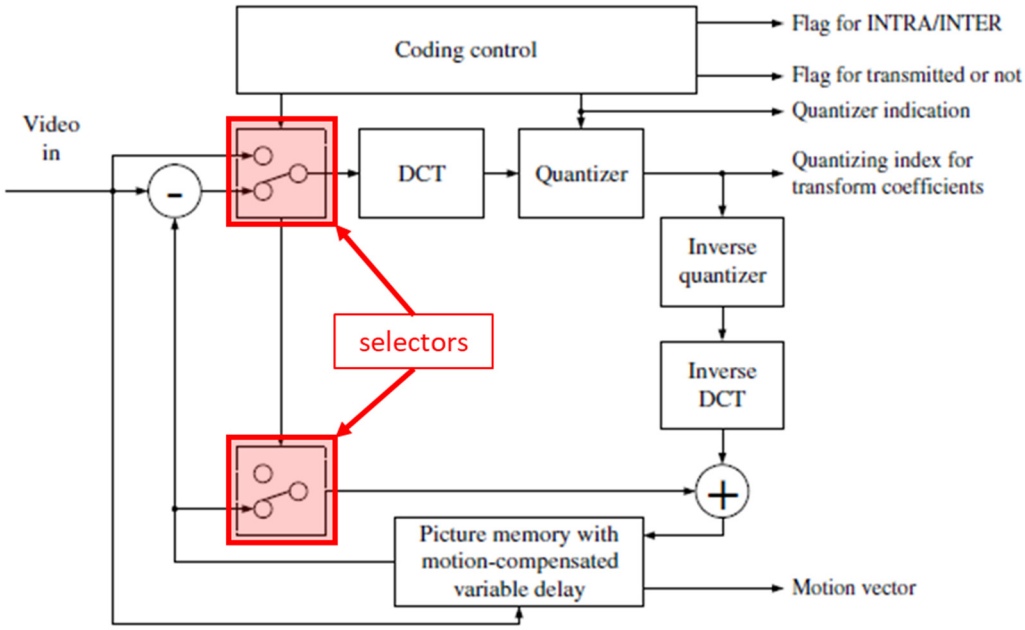

Figure 3.1: H.263 video encoder

SAMSUNG-1005, FIG. 3.1 (annotated and color added).

[6.16.DEC] a decoding controller to receive decoding control data for decoding control from the parameter data and control the selector to switch the predictive picture to be supplied to the combiner between the first and second predictive pictures according to the decoding control data.

205. As explained above in [6.15.DEC], the Mualla-Shirani-Saito combination would have switched, via a "selector" or equivalent component, between conventional motion compensation and error concealment, depending on the presence of errors in the bitstream. *See above*, [6.15.DEC]. Additionally, Mualla also discloses that these errors can be detected from "syntax and semantic violations," the "header information" being one source of this data ("***decoding control data for decoding control from the parameter data***"). SAMSUNG-1005, 231-232. Additionally, Mualla's H.263 video

encoder includes a "coding control" component ("***a decoding controller***") that is "responsible for varying several parameters to control the rate or the quality of the coded video." SAMSUNG-1005, 72, 75, FIG. 3.1. Examples of functions that are controlled by the coding control component are "INTER/INTRA mode decision at the picture or MB level, the update pattern of the forced INTRA refresh, the TRANSMIT=SKIP decision at the MB level, and the QP and its change at the picture, GOB, or MB level." SAMSUNG-1005, 75. Illustrated below is Mualla's example H.263 encoder with a "coding control" component that controls operations of the local decoder (the bottom switch).

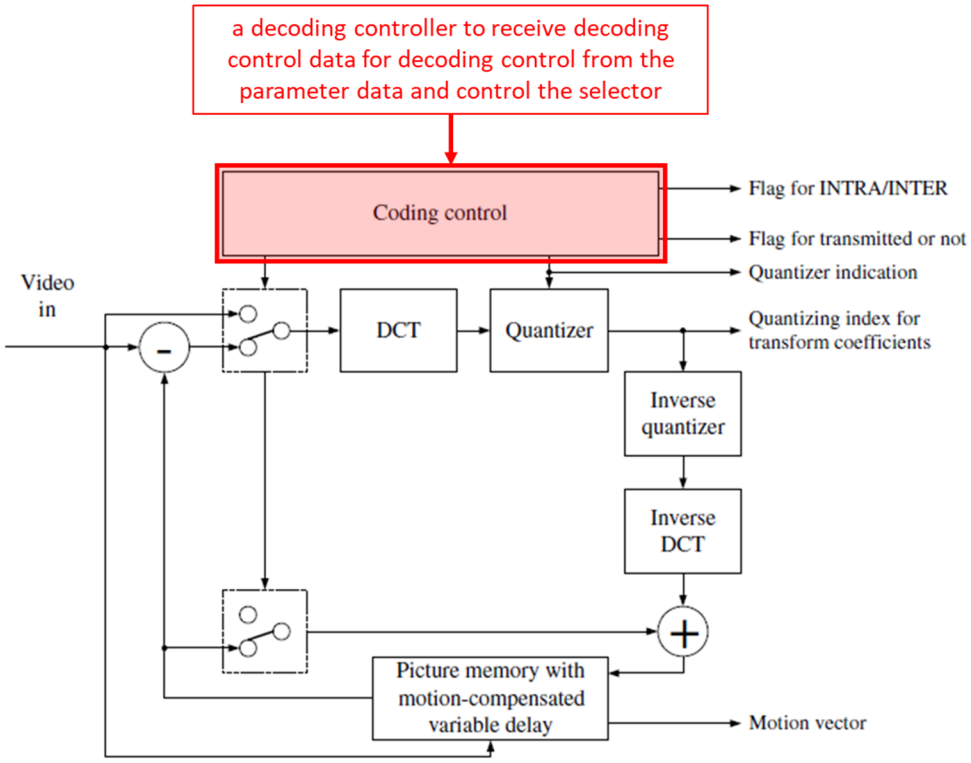

Figure 3.1: H.263 video encoder

SAMSUNG-1005, FIG. 3.1 (annotated and color added).

206. A POSITA would have recognized or found obvious that Mualla's decoder would have implemented an analogous coding control component ("***a decoding controller***") would have "***receive[d] decoding control data for decoding control from the parameter data***" and subsequently, in response to a detected error, "***control[ed] the selector to switch the predictive picture to be supplied to the combiner between the first and second predictive pictures according to the decoding control data***." Indeed, this function is consistent with the operations of the coding controller described by Mualla, and Mualla's coding controller must necessarily process syntax data ('***decoding control data for decoding control from the parameter data***') at least because it must make decisions regarding 'inter' or 'intra' prediction.

207. Additionally, as illustrated in Stockhammer's Figure 6 (reproduced below) and as discussed in [6.15.DEC], above, it was known that an H.264-based decoder can implement a ***decoding controller*** that determines whether an error has been detected (either binary 0 or 1) and controls a ***selector*** to switch between the outputs of the "error concealer" (the "***first predictive picture***") or the output of the conventional "motion compensated predictor" (the "***second predictive picture***") SAMSUNG-1009, FIG. 6.

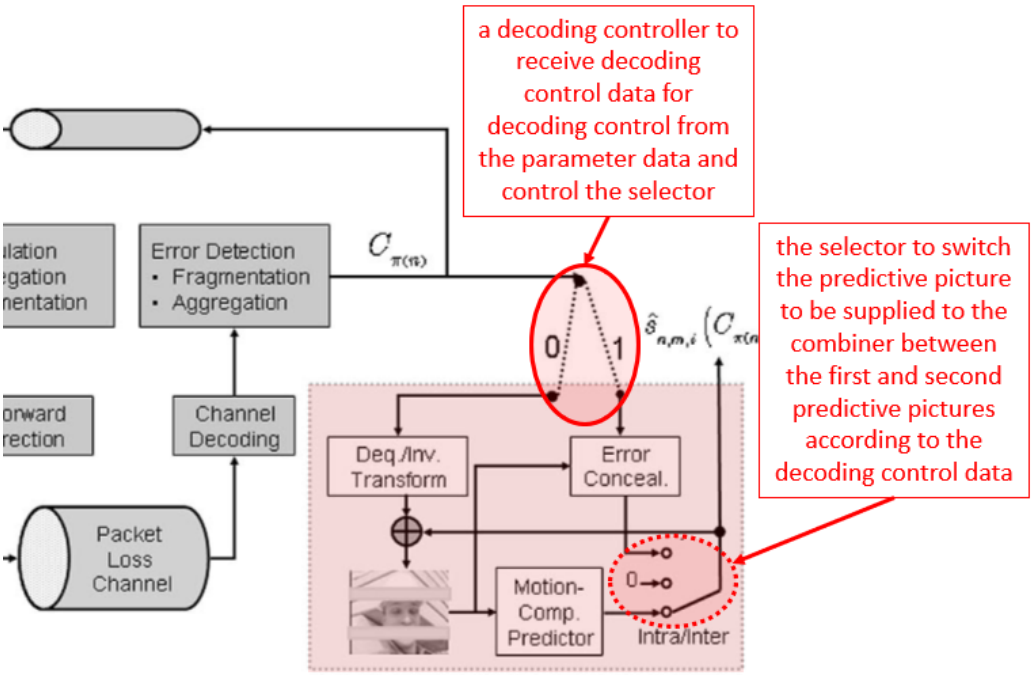

SAMSUNG-1009, FIG. 6 (annotated and color added).

[7.pre] A non-transitory computer readable device having stored thereon a computer program comprising a set of instructions when executed by a computer to implement a method for moving-picture decoding, the program comprising:

208. Mualla discloses "software-based video codecs" ("***non-transitory computer readable device***") that utilize various "algorithms" ("***a computer program comprising a set of instructions***"). SAMSUNG-1005, 71, 182, 265, 299. For example, Mualla provides an example of a specific software implementation of H.263 called "Telenor" (citing to a "H.263 TMN software codec" as reference [144]) ("***a method for moving-picture decoding***"). SAMSUNG-1005, 265, 299.

209. Moreover, the use of algorithms in implementing codecs was well-known before the Critical Date. Indeed, both Shirani and Stockhammer corroborate the use of "algorithms" and "software" in implementing H.263 and H.264 codecs. SAMSUNG-1006, 1 ("many of the video compression algorithms (e.g., H.263)"); SAMSUNG-1009, 1, 5 ("in the standardization of H.264/AVC for the development of the reference software").

[7.1.DEC]-[8.3], [10.pre]-[10.13.DEC]

210. These limitations are obvious as explained above for the corresponding limitations listed in the following table.

Claim	Corresponding Claim
[10.pre]	[6.pre]
[7.1.DEC], [10.1.DEC]	[6.1.DEC]
[7.2.COD], [10.2.COD]	[6.2.COD]
[7.3.COD], [10.3.COD]	[6.3.COD]
[7.4.COD], [10.4.COD]	[6.4.COD]
[7.5.COD], [10.5.COD]	[6.5.COD]
[7.6.COD], [10.6.COD]	[6.6.COD]
[7.7.COD], [10.7.COD]	[6.7.COD]
[7.8.DEC], [8.pre], [10.8.DEC]	[6.8.DEC]
[7.9.DEC], [10.9.DEC]	[6.9.DEC]
[7.10.DEC], [10.10.DEC]	[6.10.DEC]
[7.11.DEC], [10.11.DEC]	[6.11.DEC]

[7.12.DEC], [10.12.DEC]	[6.12.DEC]
[8.1]	[6.14.DEC]
[8.2]	[6.15.DEC]
[8.3]	[6.16.DEC]
[10.13.DEC]	[6.13.DEC]

2. "Moving picture coding" claims 1-5, 9

[1.pre], [4.pre], [9.pre]

211. Mualla teaches extensive details of an H.263-based video codec system, which implements ***coding apparatus***, ***method****, and* ***media*** for decoding ***moving pictures*** (e.g., "video"). SAMSUNG-1005, 23-26, 31, 36, 51-52, 61-63, 227-228, 241-242, 265. For example, as discussed in §VI.A, above, Mualla's Figure 9.1 and accompanying description disclose a "typical video communication system" which includes a "source encoder" ("***coding apparatus***, ***method****, and* ***media***"). SAMSUNG-1005, Figure 9.1 (reproduced below), 227-228. Further details of Mualla's "source encoder" are illustrated and described with reference to Figures 2.3, 1.1, and 2.9 of Mualla, as explained in §VI.A, above. To facilitate understanding, I provide aggregated views of the relation between these different figures of Mualla are shown in Diagrams A and B discussed in §VI.A, above, which are reproduced again below.

212. Additionally, as discussed above in [7.pre], "***non-transitory computer readable device***" is both disclosed by Mualla and further would have been an obvious implementation choice to a POSITA. *See above* [7.pre].

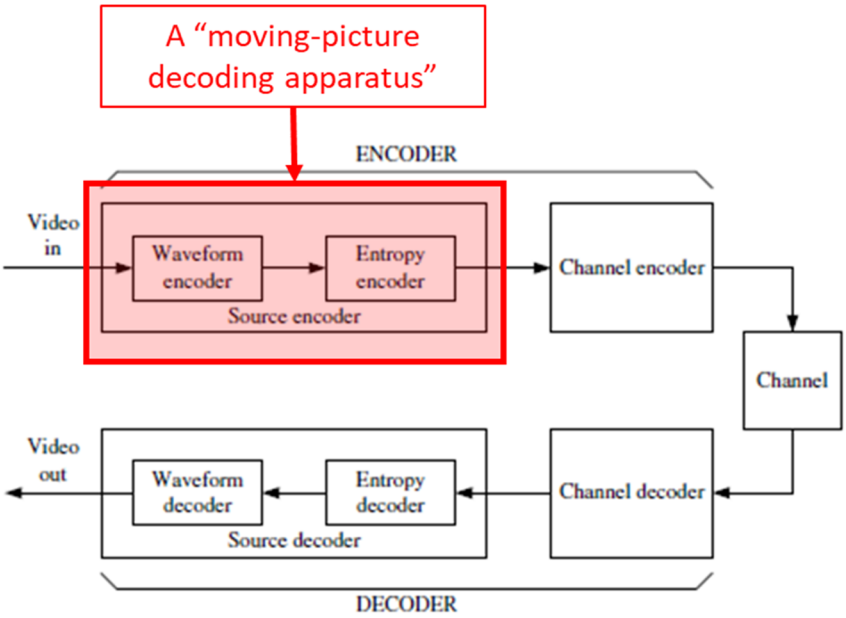

Figure 9.1: Typical video communication system

SAMSUNG-1005, FIG. 9.1 (annotated and color added).

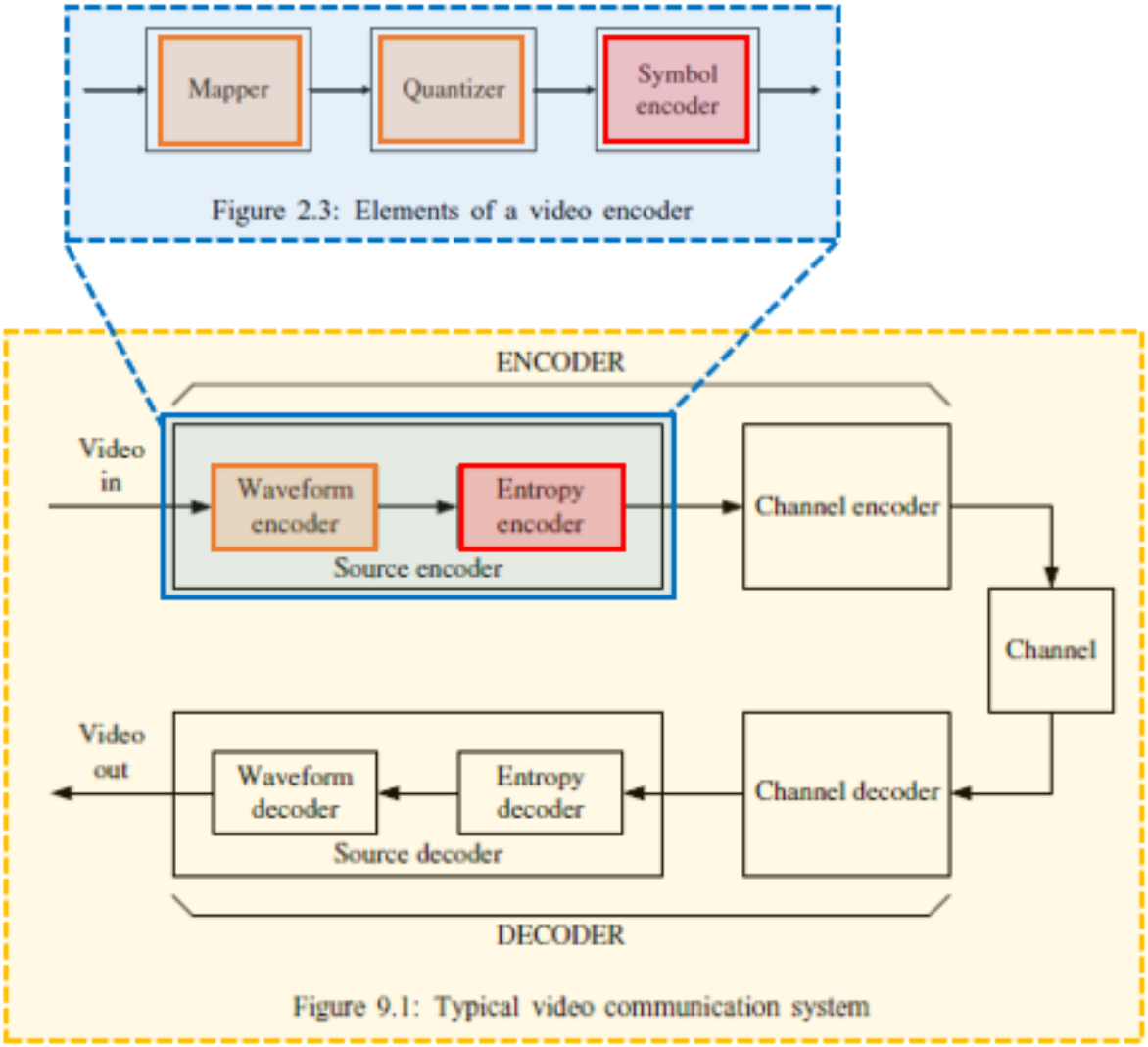

Diagram A (showing the relation between Mualla's Figures 9.1 and 2.3)

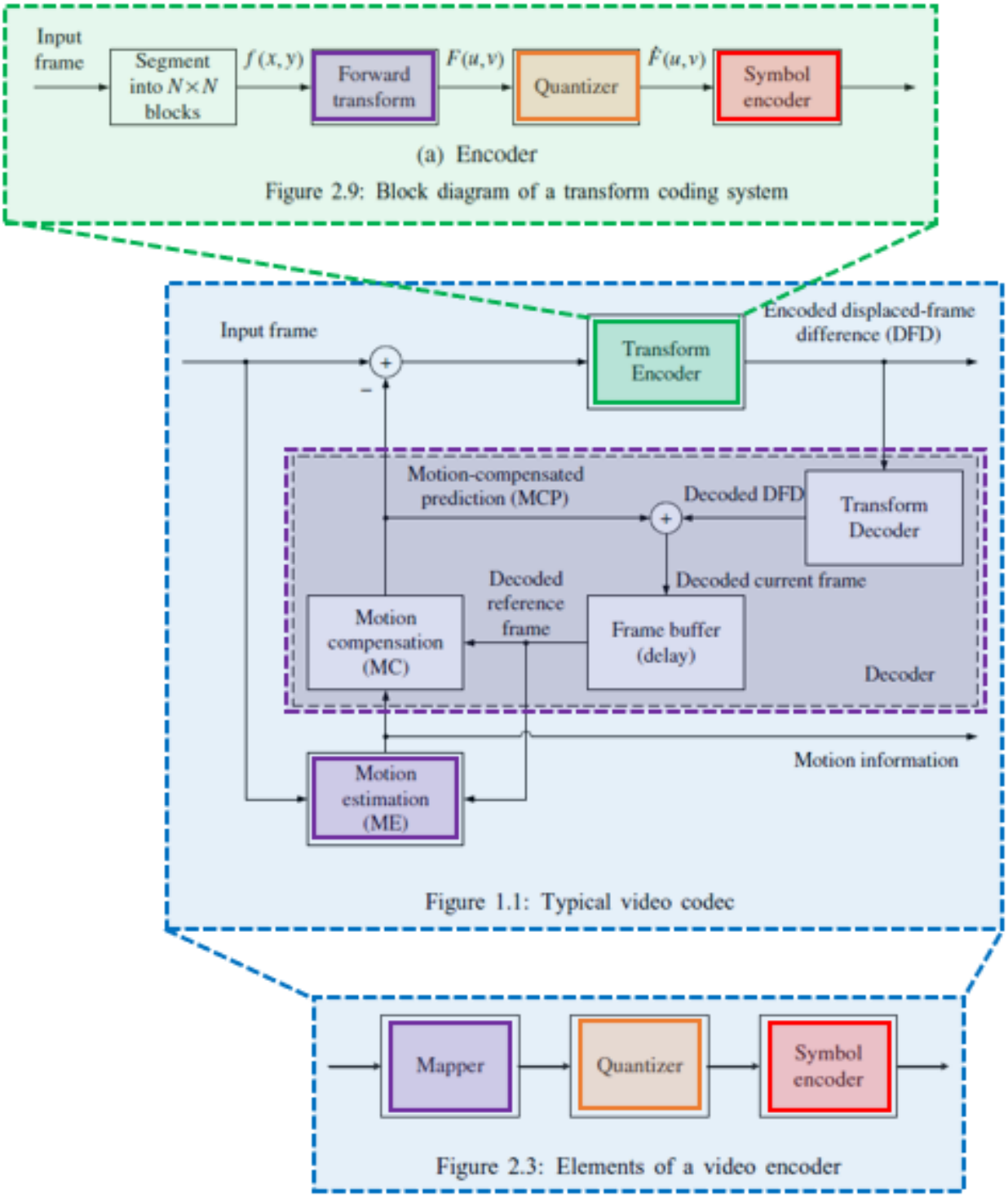

Diagram B (showing the relation between Mualla's Figures 2.3, 1.1, and 2.9)

[1.8.COD], [2.3], [4.8.COD], [5.3], [9.6.COD]

213. Mualla's "typical video codec" illustrates a component ("***a first subtractor***") that subtracts the "[m]otion-compenstated prediction (MCP)" ("***the first predictive picture***") from an "[i]nput frame" ("***the picture to be coded***") to produce, after transform encoding, an "[e]ncoded displaced-frame difference (DFD)" ("***a first residual picture***"). SAMSUNG-1005, 23-26, FIG. 1.1.

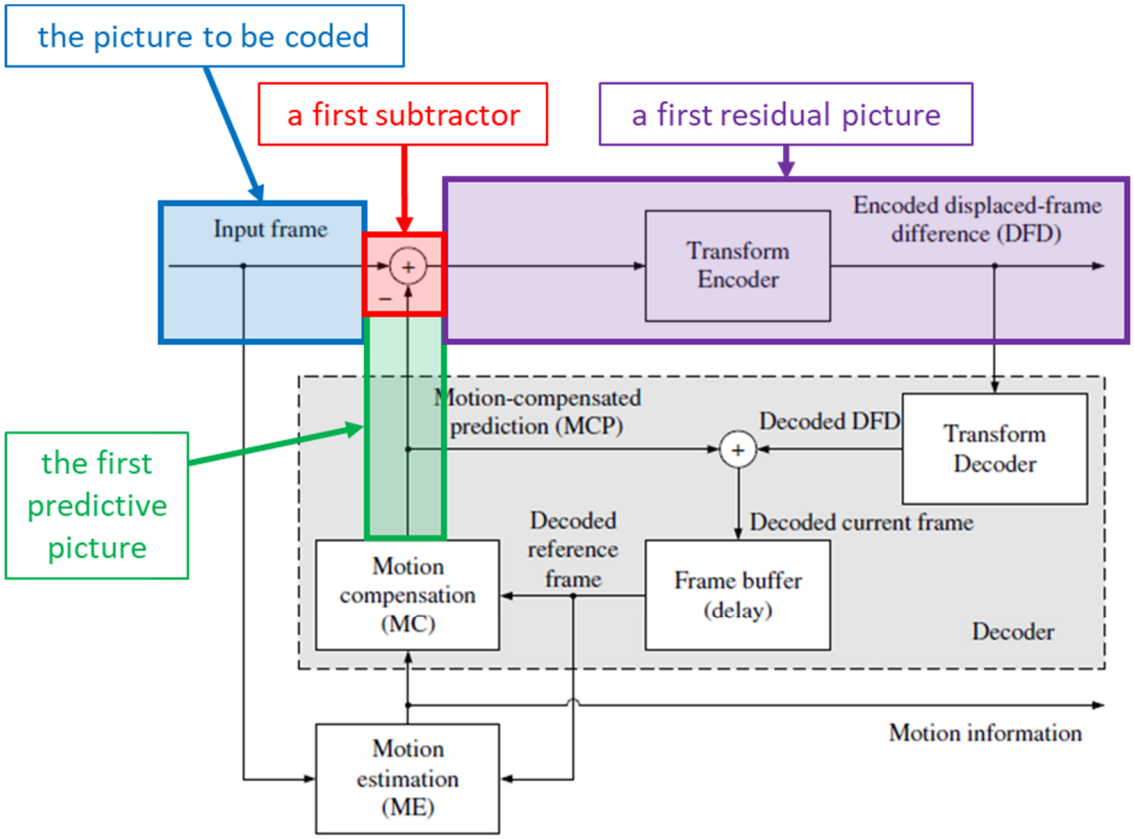

Figure 1.1: Typical video codec

SAMSUNG-1005, FIG. 1.1 (annotated and color added).

3. Remaining limitations of Claims 1, 4, and 9

214. These limitations are obvious as explained above for the corresponding limitations listed in the following table.

Claim	Corresponding Claim
[1.1.COD], [4.1.COD], [9.1.COD]	[6.3.COD]
[1.2.COD], [4.2.COD], [9.2.COD]	[6.4.COD]
[1.3.COD], [4.3.COD], [9.3.COD]	[6.5.COD]
[1.4.COD], [1.5.COD], [4.4.COD], [4.5.COD], [9.4.COD]	[6.6.COD]
[1.6.COD], [4.6.COD], [9.5.COD]	[6.7.COD]
[1.7.COD], [4.7.COD]	[6.3.COD]
[1.9.COD], [1.10.COD], [4.9.COD], [4.10.COD], [4.14.COD], [9.7.COD], [9.8.COD]	[6.2.COD]
[1.11.DEC], [4.11.DEC], [9.9.DEC]	[6.9.DEC]
[1.12.DEC], [4.12.DEC], [9.10.DEC]	[6.10.DEC]
[4.13.COD]	[6.8.DEC]
[2.1], [5.1]	[6.2.COD]
[2.2], [5.2]	[6.14.DEC]
[2.4], [5.4]	[6.15.DEC]
[5.5]	[6.16.DEC]

VIII. Additional Remarks

I currently hold the opinions set expressed in this declaration. But my analysis may continue, and I may acquire additional information and/or attain supplemental insights that may result in added observations.

Cliff Reader, Ph.D.

Expertise

- Real-time Processing and Display
- Video coding (MPEG-HEVC)
- Audio coding (MPEG-AAC)
- Imaging/Video Systems Architecture
- Imaging/Video Chip Architecture
- Videoconferencing
- Speech Processing
- Consumer audio/video
- Reconnaissance Imaging
- Medical Imaging

Professional Summary

Dr. Reader has over forty five years of work experience in digital imaging, digital video & audio and digital speech processing. In the 1970's and early 1980's, he was one of the leaders in the digital imaging field, performing extensive work in areas of compression, real-time processing, real-time display, image enhancement, and others. Applications included reconnaissance imaging, medical imaging, earth resources management and videoconferencing. This work anticipated much of the technology being used in contemporary consumer digital video systems. He has in-depth experience of the commercial history and when key parts of technology were first developed and published.

Dr. Reader's career includes technical work in areas of algorithm design, system design, and semiconductor chip design; and business development, marketing and sales work in areas of market analysis, product roadmap development and direct sales.

Dr. Reader has held many leadership roles in standards development: US Head of Delegation to MPEG (1991-1993); chief editor of the MPEG1 standard (1991-1993); instigator of the successful effort to make MPEG2 the market standard for digital TV over proprietary competitors in the US and national competitors in Europe and Japan (1992); MPEG4 Subcommittee Chairman (1993-1996); AVS (China) Subgroup Chairman (2003-Present). He is an expert in all major audio-video standards. MPEG audio (Layer I, II, mp3, AAC), Dolby AC3, MPEG video (1, 2, 4), H.264, Windows Media 9 (VC-1), H.265 (HEVC), AVS and AV1. He is also an expert in DVD standards, including formatting, navigation and authoring.

Dr. Reader has extensive experience in patent licensing and patent pools. He was the technical expert for developing the initial list of potentially essential patents for the first MPEGLA patent pool (MPEG2 video and systems). He is the Co-Director leading the pool formation and license negotiations for the AVS patent pools. Dr. Reader has experience in the valuation of patents and the acquisition and sale of patent portfolios.

Dr. Reader has authored over twenty technical papers, two book chapters and two patents in digital video processing, display, and compression. He taught digital signal processing and image processing at Santa Clara University in the early 1980s and is an Adjunct Professor at Peking University, Beijing, China.

Employment History

From: 2001 **Independent Consultant**
To: Present Escondido, CA

Provide technical and marketing consulting services in the areas of digital imaging, digital video, digital audio and speech including:

- consumer video
- real-time processing and display
- image and video & audio compression (specializing in standards)
- imaging/video systems architecture
- imaging/video chip architecture
- audio/video transmission, including optical & wireless networks

Over 80 clients including Apple, AT&T, Adobe, Broadcom, China Central TV, Chinese Academy of Sciences, Cisco, Comcast, DirecTV, Dish Network, Disney, EchoStar, ETRI, Facebook, Fujifilm, Gateway, GE, Google, Haier, Hisense, HP, Hulu, IBM, Intel, Johnson Controls, KAIST, Lenovo, LG, Matsushita, MediaTek, Microsoft, Motorola, Netflix, Nikon, Nokia, ON2, OPPO, Peloton, Philips, Quanta, Riverbed, Samsung, Sharp, Siemens, Sony, Starz, Sun Microsystems, Toshiba, TPV, Tyco, US Department of Justice, Verizon, Vimeo, Vizio, Wistron, Xiaomi, Yahoo, Zoran and ZTE.

<u>Personal database of patent analysis:</u>
-Evaluation of all the US patents in the MPEG2, H.264 and H.265 patent pools.
-Evaluation of the US patents and published applications underlying the H.264 and H.265 standards.
-Personal archive of over 2000 audiovisual patents.

<u>Personal database of audio and video prior art.</u>
-Virtually complete collection of all contributions to the H.26x and MPEGx families of standards from 1985 to today.
-Many hundreds of technical journal and conference articles documenting the first invention of key technologies.
-Work-in-progress book on the history of video compression.
-Historical collection of technical data from the earliest digital video, image processing and real-time image display systems in the 1970s and 1980s.

From: 1999 **nDSP Corporation**
To: 2001 Campbell, CA
Title: *Vice President of Marketing and Acting Vice President of Sales*

Responsible for marketing and sales in a startup company providing high-quality video signal processors to TV manufacturers. Developed product specifications and roadmap. Built and managed sales and marketing team of 6 direct and contractor staff in the US and Japan to provide technical sales, sales support, application engineering, Marcomm and PR. Established distribution in China, Japan and throughout the Far East. Secured first sales as company moved into production phase with design wins in China, Japan and Europe. Initiated and secured major design wins in emerging Progressive DVD business, with production volumes beginning in 4Q00 at an annualized rate of $3.5M. Established strategic partnership with Pixelworks in LCD chip business. Pixelworks acquired nDSP in 2001.

From: 1997 **CagEnt Technologies, Inc. (wholly owned by Samsung)**
To: 1998 Santa Clara, CA
Position: *Vice President of Sales, Digital Video Products*
Responsible for a line of PC-based real-time MPEG2 and Dolby Digital encoders. Established distribution agreements for third-party DVD authoring software. Secured OEM contracts for the products. Built the sales channel worldwide. Built sales to break-even point in 9 months leading to sale of the product line.

From: 1993 **Samsung Semiconductor, Inc.**
To: 1997 San Jose, CA
Position: *Director of Marketing, Digital Media Products;*
Acting Director of Software Engineering
Developed business plans for digital audiovisual semiconductor chips. Managed team of over 50 software engineers in US and Korea for development of a media processor. Established strategic partnerships with Microsoft and IBM for media processor

From: 1990 **Cypress Semiconductor, Inc.**
To: 1993 San Jose, CA
Position: *Business Development Manager*
Founding member of new business unit chartered to develop a "video DSP". Jointly developed a complete business plan, and personally initiated and developed relationships with Philips, Sun Microsystems, Apple Computers and IBM. Chief architect for this early media DSP design, capable of complete MPEG1 decode in real time. (Fully validated by cycle-accurate simulation). Managed R&D team of 10 hardware and software engineers.

Head of US Delegation to MPEG, 1991 to 1992. Chief Editor of the MPEG1 standard. Technical Expert for establishing the

MPEGLA Patent Licensing Pool.

From: 1988 **Sun Microsystems, Inc.**
To: 1990 Mountain View, CA
Position: *Program Manager*
Developed requirements and specifications for real-time imaging system. Managed a team of 20 engineers to develop the architecture and high-level design. Interfaced with two key customers – Philips Medical Systems and Lockheed. Developed design for single-board real-time medical and reconnaissance image display.

From: 1981 **International Imaging Systems, Zoran, Virtual Imaging**
To: 1988 Design and development of real-time image processing and display systems. Details available on request.

From: 1975 **Ford Aerospace & ESL (A Division of TRW)**
To: 1981 Details available on request.

Consulting History

Date 2023 **Intel**
To: Present
Duties: Consulting Expert

Date 2023 **Disney**
To: Present
Duties: Consulting Expert

Date 2023 **Samsung**
To: Present
Duties: Consultant

Date 2023 **Peloton**
To: Present
Duties: Consulting Expert in NEC matter

Date 2023 **Alps Alpine**
To: 2023
Duties: Consulting Expert in DivX matter

Date 2023 **Fish & Richardson**
To: Present
Duties: Consultant

Date	2023	**Oppo**
To:	Present	
	Duties:	Consulting Expert on speech processing in Nokia matter
Date	2022	**Samsung**
To:	2023	
	Duties:	Testifying Expert on speech processing in Jawbone matter
Date	2022	**Asus, Lenovo, MSI**
To:	2023	
	Duties:	Consulting Expert in VideoLabs matter
Date	2022	**Google**
To:	2023	
	Duties:	Consulting Expert on speech processing in Jawbone matter
Date	2022	**Starz**
To:	Present	
	Duties:	Consulting Expert in VideoLabs matter
Date	2022	**Meta Platforms (Facebook)**
To:	Present	
	Duties:	Consulting Expert in VideShare matter
Date	2022	**Oppo**
To:	Present	
	Duties:	Consulting Expert in InterDigital matter
Date	2022	**Apple**
To:	2023	
	Duties:	Consulting Expert on speech processing in Jawbone matter
Date	2021	**Verkada**
To:	2022	
	Duties:	Testifying Expert in Motorola Solutions matter
Date	2021	**Facebook**
To:	2022	
	Duties:	Consulting Expert in EyesMatch matter
Date	2021	**Videoconferencing company**
To:	2023	
	Duties:	Testifying Expert
Date	2021	**Canon**

To: 2022
Duties: Consulting Expert in WSOU Investments/Brazos Licensing matter.

Date 2021 **Axis**
Duties: Consulting Expert

Date 2021 **nVIDIA**
To: 2022
Duties: Consultant

Date 2020 **Xiaomi**
To: 2021
Duties: Consulting Expert in InterDigital matter

Date 2020 **LG**
To: 2021
Duties: Consulting Expert DivX matter

Date 2020 **Vizio**
To: 2023
Duties: Consulting Expert VDPP matter

Date 2020 **Netflix**
To: 2022
Duties: Consultant

Date 2020 **Oppo**
To: Present
Duties: Consultant

Date 2020 **IdeaHub**
To: Present
Duties: Preparation of declaration for Inter Partes Review proceedings. (Unified Patents matter)

Date 2019 **Google**
To: 2021
Duties: Preparation of declarations for Inter Partes Review proceedings (PMC matter)

Date 2019 **Google**
To: 2021
Duties: Consulting Expert (Multiple projects)

Date 2019 **LG**
To: 2020

Duties: Preparation of declarations for Inter Partes Review proceedings. (Uniloc matter)

Date 2019 To: 2021 **Klarquist, Sparkman**
Duties: Consulting Expert (Multiple projects)

Date 2019 To: 2021 **Netflix, Hulu**
Duties: Preparation of declarations for Inter Partes Review proceedings. (DivX matter)

Date 2019 **MediaTek**
Duties: Consulting Expert in American Patents matter

Date 2019 **AT&T**
Duties: Consulting Expert

Date 2019 To: 2021 **KAIST/KBS**
Duties: Consulting Expert for Inter Partes Review proceedings. (Unified Patents matter)

Date 2019 To: 2020 **Vimeo**
Duties: Preparation of declarations for Inter Partes Review proceedings. (BT matter)

Date 2019 **Apple**
Duties: Preparation of declarations for Inter Partes Review proceedings. (Red.com matter)

Date 2019 To: 2021 **Adobe**
Duties: Preparation of declarations for Inter Partes Review proceedings and consulting expert. (Realtime matter)

Date 2018 To: 2019 **Toshiba**
Duties: Testifying expert concerning valuation of essential patents for ATSC standards

Date 2018 **Hisense**
Duties: Analysis of essential patents for AAC standards

Date 2018 **HTC**

To: 2020
Duties: Analysis of essential patents for the H.265 standard

Date 2018 **Cisco**
To: 2020
Duties: Consulting expert in Realtime matter

Date 2017 **Dish Network**
To: 2023
Duties: Consulting expert in ClearPlay matter

Date 2017 **Apple**
To: 2019
Duties: Preparation of declarations for Inter Partes Review proceedings. (Uniloc matter)

Date 2017 **Dish Network**
To: 2020
Duties: Testifying expert in Realtime matter

Date 2017 **CustomPlay**
To: 2020
Duties: Preparation of declaration for summary judgment in Amazon case.

Date 2017 **Vizio, Funai, LG, MediaTek, MStar**
Duties: Testifying expert in Broadcom case.

Date 2017 **Apple**
Duties: Preparation of declarations for Inter Partes Review proceedings. (Nokia matter)

Date 2017 **Vizio**
Duties: Preparation of declarations for Inter Partes Review proceeding. (Lightside Technologies matter)

Date 2016 **Dell, Riverbed, EchoStar, Dish Network**
To: 2019
Duties: Testifying expert in Realtime matter

Date 2016 **Sharp, Vizio, ON**
To: 2018
Duties: Testifying expert in WiLAN matter

Date 2016 **Avid**
To: 2017
Duties: Testifying expert in Harmonic matter.

Date	2016	**Apple**
	Duties:	Testifying expert in PUMA matter.
Date	2016	**Vizio**
	Duties:	Testifying expert in PMC matter.
Date	2016	**US Dept. of Justice, Dept. of Homeland Security, DoD, FBI, NSA, & Others**
To:	2021	
	Duties:	Consulting expert in Discovery Patents (3rd Eye Surveillance) matter. Declarations in support of six Inter Partes Reviews.
Date	2015	**ST Micro**
To:	2016	
	Duties:	Consulting expert in Avago matter.
Date	2015	**AT&T**
	Duties:	Consulting expert in Raniere matter.
Date	2015	**Motorola**
To:	2016	
	Duties:	Consulting expert in PUMA matter.
Date	2015	**TPV**
To:	2016	
	Duties:	Consulting expert in Thomson licensing matter.
Date	2015	**Tyco (Exacq, Johnson Controls)**
To:	2019	
	Duties:	Consulting expert in JDS Technologies matter.
Date	2015	**Tyco**
	Duties:	Declaration in support of Inter Partes Review petition in Hawk Technology matter.
Date	2015	**Sceptre**
	Duties:	Expert reports in licensing matter concerning MPEGLA MPEG2 pool patents.
Date	2015	**Samsung**
	Duties:	Consultant and fact witness in case asserting Samsung patents of which I am a named inventor, against NVidia.
Date	2015	**Nissim**
To:	2016	

	Duties:	Consultant expert for patent holder in 20th Century Fox, MGM, and Paramount cases concerning patents related to DVD navigation. Testified at Markman hearings.
Date	2015	**Nikon**
To:	Present	
	Duties:	Consultant.
Date	2015	**Humax**
	Duties:	Search and analysis of prior art.
Date	2015	**Apple**
	Duties:	Analysis of patent portfolio potentially essential for the H.264 standard.
Date	2014	**Haier**
To:	2018	
	Duties:	Analysis of patent portfolios for smart consumer devices.
Date	2014	**Cisco**
To:	2021	
	Duties:	Consultant.
Date	2014	**ZTE, Sony, LG, Samsung, Nokia, GoPro**
To:	2015	
	Duties:	Consulting expert.
Date	2014	**Tyco**
To:	2015	
	Duties:	Expert reports; declaration in support of Inter Partes Review in Trover matter.
Date	2013	**Humax**
	Duties:	Consultant.
Date	2014	**GE Licensing**
To:	2015	
	Duties:	Consultant.
Date	2014	**HikVision & Axis**
To:	2015	
	Duties:	Declaration in support of Inter Partes Review. Expert reports in Trover matter.
Date	2014	**Sharp**
To:	2016	
	Duties:	Declaration in support of Inter Partes Review in Wi-Lan matter.

Date	2013	**InterDigital**
To:	2015	
	Duties:	Consulting expert in support of licensing a patent portfolio.
Date	2013	**Apple**
	Duties:	Consulting expert in National Cheng Kung University matter.
Date	2013	**Acer, ASUS, TPV**
To:	2014	
	Duties:	Testifying expert in Florida Atlantic University matter.
Date	2013	**Toshiba**
To:	2014	
	Duties:	Testifying expert in WiLAN matter.
Date	2013	**Grass Valley Group**
	Duties:	Consulting expert for defense in FastVDO matter.
Date	2013	**TI**
To:	Present	
	Duties:	Consulting expert.
Date	2012	**Vizio**
	Duties:	Consulting expert in Innovus Prime matter.
Date	2012	**Haier & Shandong Provincial Government**
To:	2014	
	Duties:	Foreign expert advisor for developing and acquiring patent portfolios for innovative consumer products. Development of a patent pool for patents essential to standards for wireless power.
Date	2012	**Vizio**
To:	2014	
	Duties:	Consulting expert in MIT matter.
Date	2012	**Nokia**
To:	2013	
	Duties:	Consulting expert.
Date	2012	**TPV & Vizio**
To:	2013	
	Duties:	Testifying expert for defense in Hitachi matter.
Date	2012	**Samsung**
	Duties:	Consulting expert in Myport matter.

Date	2012	**Verizon Wireless (Cellco) & T-Mobile**
To:	2013	
	Duties:	Testifying expert for defense in Realtime Data matter.
Date	2011	**Apple**
	Duties:	Consulting expert in Technicolor matter.
Date	2012	**Microsoft**
To:	2014	
	Duties:	Consulting expert for plaintiff in Motorola matter.
Date	2012	**Apple & LG**
To:	2014	
	Duties:	Testifying expert for defense in MPT matter.
Date	2011	**Sanyo & Olympus**
	Duties:	Consulting expert for defense in FastVDO matter.
Date	2011	**Apple**
	Duties:	Consulting expert for defense in FastVDO matter.
Date	2011	**Sony**
	Duties:	Consulting expert for defense in FastVDO matter.
Date	2011	**Philips**
To:	2014	
	Duties:	Consulting expert for licensing essential patents.
Date	2011	**Apple**
	Duties:	Consulting expert for defense in MobileMediaIdeas matter.
Date	2011	**Video264Innovations**
	Duties:	Consulting expert.
Date	2011	**Nikon, Fujifilm & Panasonic**
	Duties:	Consulting expert for defense in FastVDO matter.
Date	2011	**Haier**
To:	2014	
	Duties:	Consultant for standards, patent pools and patent licensing.
Date	2011	**Susman Godfrey**
	Duties:	Consultant for patent analysis.
Date	2011	**Vizio**

	Duties:	Testifying expert for defense in MPT matter.
Date	2011	**Tivo**
	Duties:	Consulting expert.
Date	2011	**Nikon**
To:	2013	
	Duties:	Consulting expert for defense in MPT matter.
Date	2011	**Broadcom**
	Duties:	Consulting expert.
Date	2010	**Lionsgate Entertainment**
	Duties:	Consulting expert in MPEG licensing matter.
Date	2010	**Verizon**
To:	2012	
	Duties:	Testifying expert for defense in ActiveVideo Networks matter.
Date	2010	**Lenovo**
To:	2011	
	Duties:	Consulting expert for defense in licensor matter.
Date	2010	**Sonic, Cyberlink & Joint Defense Team**
	Duties:	Consulting expert for defense in Mediostream licensor matter.
Date	2010	**Wistron**
To:	2011	
	Duties:	Consulting expert for defense in Toshiba licensor matter.
Date	2010	**Panasonic, Pioneer**
To:	2011	
	Duties:	Consulting expert for defense in VES licensor matter.
Date	2010	**Zoran**
To:	2011	
	Duties:	Technical analysis of patents potentially related to video coding standards.
Date	2010	**Intravisual**
To:	2015	
	Duties:	Consulting expert for patent licensing.
Date	2009	**Apple**
	Duties:	Technical analysis of patents potentially related to video coding standards.

Date	2009	**SanDisk**
	Duties:	Consulting expert re Audio and Video coding patents
Date	2009	**Lenovo**
To:	2011	
	Duties:	Consulting expert for defense in MPEGLA licensor matter.
Date	2009	**Polycom**
To:	2010	
	Duties:	Consulting expert for defense in MPT matter.
Date	2009	**DirecTV**
To:	2011	
	Duties:	Consulting expert for defense in MPT matter.
Date	2009	**EchoStar**
To:	2010	
	Duties:	Consulting expert for defense in MPT matter.
Date	2009	**Vizio**
	Duties:	Consulting expert for defense in Sony matter.
Date	2009	**Vizio**
To:	2010	
	Duties:	Consulting expert for defense in LG matter.
Date	2009	**Vizio, TPV, Amtran**
To:	2010	
	Duties:	Technical report & video presentation to US Customs on design issues related to Funai matter. Testified in ITC hearing, March 2010.
Date	2008	**Humax (Korea)**
To:	2009	
	Duties:	Audio patent and prior art review.
Date	2008	**IC Media (Canada)**
To:	2009	
	Duties:	Design of digital signage.
Date	2008	**AVS Patent Pool Administration (China)**
To:	Present	
	Duties:	Co-Director, leading license negotiations among domestic and multinational licensors.

Date	2008	**DirecTV**
	Duties:	Prior art search for DirecTV's appeal against Finisar.
Date	2008	**Pure Digital**
	Duties:	Prior art research and analysis.
Date	2008	**Wragge (UK)**
	Duties:	Prior art review for two video coding patents.
Date	2008	**Microsoft**
	Duties:	Extensive non-infringement analysis for patents asserted by Multimedia Patent Trust (MPT).
Date	2008	**iPotential**
To:	2010	
	Duties:	Technical analysis of patents potentially related to video coding standards.
Date	2008	**Alba (UK) aka Harvard Research**
To:	2009	
	Duties:	General education on essential patents, licensing, prior art related to the MPEG2 video standard.
Date	2008	**Philips (Holland)**
	Duties:	Review of patents for essentiality.
Date	2008	**Proview**
	Duties:	Prior art search for TV display features.
Date	2008	**Nissim**
To:	2014	
	Duties:	Consultant expert for plaintiff in Time-Warner case concerning patents related to DVD navigation.
Date	2008	**Comcast**
	Duties:	Technical analysis of MPEG2 systems, DSM-CC, and carousel operation in the cable TV network environment. Contribution to expert's report in Comcast's successful litigation against Finisar.
Date	2007	**Sun Microsystems**
To:	2009	
	Duties:	Chief architect of royalty-free video codec: OMS Video. Extensive supporting patent analysis and technical publication analysis for prior art review.
Date	2008	**SanDisk**

Duties: Technical analysis of patents and prior art searching for audio coding.

Date 2008 **Stammberger (Munich)**
Duties: Technical analysis of patents potentially related to video coding standards.

Date 2008 **Trigem America Liquidating Trust**
Duties: Preparation of expert reports concerning litigation between Toshiba and Trigem.

Date 2007 **Susman-Godfrey**
Duties: Technical analysis of patents potentially related to video coding standards.

Date: 2007 **Wong-Cabello**
Duties: Technical analysis of patents potentially related to video coding standards.

Date: 2007 **Sisvel**
Duties: Technical assistance in licensing audio patents to a third party.

Date: 2007 **Quanta**
Duties: Technical assistance in litigation related to DVD.

Date: 2006 **CCTV (China Central TV)**
Duties: Technical analysis of patents potentially related to MPEG2, H.264, AVS and VC-1 video coding standards and MPEG-AAC and Dolby audio coding standards.

Date: 2006 **MediaTek**
Duties: Technical analysis of MediaTek patents potentially related to video coding standards.

Date: 2006 **Alcatel**
Duties: Technical analysis of Alcatel patents potentially related to video coding standards.

Date: 2006 **Motorola**
Duties: Analysis of technologies contributed to the H.264 standard.

Date: 2005 **Nokia**
Duties: Analysis of technologies contributed to the H.264 standard.

Date: 2005 **Avid**
Duties: Technical analysis of patents potentially related to coding standards.

Date: 2005 **IBM**
Duties: Analysis of technologies contributed to the H.264 standard.

Date: 2005 **HP**
Duties: Analysis of selected audio coding patents.

Date: 2005 **ComVentures**
Duties: Due diligence review of a start-up company in the video semiconductor business.

Date: 2005 **nVidia**
Duties: Prior art search for a set of third-party patents.

Date: 2004 **Microsoft**
Duties:
- Working with a major financial services company, developed a procurement model for managing licensing costs.
- Assisting development of non-infringement positions for a set of patents. (Not in suit).

From: 2004 **SAGEM (France)**
To: 2005
Duties: Technical analysis of potential infringement by SAGEM of a set of third-party patents.

From: 2004 **Polycom Inc.**
To: 2005
Duties: Technical analysis of Polycom patents potentially related to video coding standards.

From: 2004 **Sony Corp.**
To: 2006
Duties:
- Technical analysis of potential infringement by Sony of a set of third-party patents. The parties settled without litigation.
- Analysis of a third-party patent per Sony's direction.

Date: 2004 **On2 Inc**
Duties: Delivery of the comprehensive set of reports on IPR potentially related to the emerging H.264 standard.

Date: 2004 **Matsushita Avionics**
Duties: Technical analysis of potential infringement of Matsushita patents by a third party.

Date: 2004 **Connex Inc.**
Duties: Teaching the details of key complex algorithms in the H.264 standard.

Date: 2004 **DoCoMo (Japan)**
Duties: Delivery of the comprehensive set of reports on IPR potentially related to the emerging H.264 standard.

From: 2004 **DivX Inc.**
To: 2006
Duties: Analysis of technologies contributed to the H.264 standard

Date: 2004 **Cues, Inc**
Duties: Assisted evaluation of infringement by Cues' products of a patent asserted by a third party. The parties settled without litigation.

From: 2003 **GE Licensing**
To: 2004
Duties: Working with a major financial services company, developed a business, market and financial model for valuation of a portfolio of patents through their expiration.

From: 2003 **Institute of Computing Technology, Chinese Academy of Sciences**
To: Present
Duties:

- Preparation of IPR Report for IPR potentially related to the AVS Video standard. This effort involved review of over 2500 abstracts and over 450 patents.
- IPR Subgroup Chairman of AVS. Formed an IPR Experts group to establish a legal foundation for AVS IPR. This group comprised approximately 20 attorneys and business development managers from eight multinational companies representing the PC, consumer, semiconductor and communication industries. (Broadcom, IBM, Intel, Matsushita, Microsoft, Nokia, Sony, Sun Microsystems). The group drafted a member agreement, bylaws and a formal IPR policy governing licensing commitments, disclosure obligations, and protection of license holder rights. AVS Members approved these documents in September 2004.
- Co-Director of AVS Patent Pool. Leading the drafting and negotiation of patent pool management and licensing agreements.
- Adjunct Professor, supervising a graduate student project on deinterlacing algorithm development.

Date: 2003 **Yahoo**
Duties: Prior art search to provide background information per Yahoo's request.

Date: 2002 **Gateway, Inc.**
To: 2007
Duties: Extensive prior art search and assistance with claim construction in a litigation matter with Lucent Technologies.

From: 2002 **Apple Computer**
To: 2007

Duties:
- Technical analysis of Apple patents potentially related to H.264.
- Prior art search for various patents per Apple's request.

Date: 2002 **Siemens (Germany)**

Duties:
- Technical analysis of Siemens patents potentially related to H.264.
- Delivery of the comprehensive set of reports on IPR potentially related to the emerging H.264 standard.

Date: 2002 **JVT Committee (Apple, Cisco, Nokia, Polycom, Sun Microsystems, Tandberg, Teles, Texas Instruments, UBVideo, VideoLocus)**

Duties: Developed a comprehensive set of reports on IPR potentially related to the emerging H.264 standard. The reports included a technical review of legacy and new patents for video coding, and analysis of the patent statements provided by all companies whose contributions were adopted into H.264.

Date 2002 **Intervideo**

Duties: Advised on market opportunities in the emerging MPEG4 marketplace.

Date: 2001 **Proskauer Rose LLP**

Duties: Provided background support in MPEGLA's (successful) effort to license MPEG2 to the major PC manufacturers.

Date 2001 **Pixonics**

Duties: Developed marketing plan and marketing support materials for this incubator-stage company.

Date 2001 **Eltron, (Taiwan)**

Duties: Provided overview of the digital video semiconductor market.

Date 1999 **nDSP Corporation**

Duties: Drafted the sales and marketing plan for this early-stage company. Joined nDSP full-time.

Date: 1998 **IBM Corp.**

Duties: Assisted with participation in the ATSC DASE (datacasting) standard.

Date 1998 **Spruce Technologies**

Duties: Assisted with transition of Cagent MPEG encoder product after it was sold to Spruce.

From: 1997 **Samsung Advanced Institute of Technology**
To: 1999

	Duties:	Supported Samsung researchers in MPEG4 standard development. Led effort to provide error-resilient 3D-mesh coding.
Date	1997	**MPEGLA LLC**
	Duties:	Review of opportunity for an MPEG4 patent pool
From:	1993	**CableLabs**
To:	1994	
	Duties:	Teamed with a patent attorney to develop the initial essential patent list for MPEG2. Reviewed approximately 10,000 abstracts and 1,000 patents for the MPEG2 Video and MPEG2 Systems standards. This effort led to the MPEGLA patent pool.

Litigation Support Experience

Quinn Emanuel Urquhart & Sullivan, LLP, San Francisco, CA

Case	Motorola Solutions vs. Verkada, **Investigation No. 337-TA-1281**
Project:	Expert report, deposition and trial testimony on invalidity of Motorola patents.
Status:	Final determination found Verkada not infringed
Filed:	August, 2021
Location:	United States International Trade Commission, Washington DC

Orrick, Herrington & Sutcliffe, LLP, New York, NY

Case	ClearPlay vs. Dish Network & EchoStar Technologies, **Case No .: 2:14-cv-00191**
Project:	Expert report, deposition and trial testimony on invalidity of ClearPlay patents.
Status:	ClearPlay patents not infringed
Filed:	March 13, 2014
Location:	United States District Court for the District of Utah

Akin Gump, Fish & Richardson, Finnegan, Baker Hostetler, Washington, DC

Case	Broadcom vs. Vizio, LG, Funai, MediaTek, MStar, **Investigation No. 337-TA-1047**
Project:	Expert report and deposition on non-infringement of Broadcom's patent.
Status:	Final Determination in favor of Respondants.

Jones Day, Cleveland, OH

Case	Avid Technology vs. Harmonic, **Case No. C.A. No. 12-627-GMS**
Project:	Expert reports and deposition on infringement of Avid's patent.

Status: Parties settled before trial.

Haynes and Boone, Dallas, TX

Case Realtime vs. Riverbed, **Case No. 6:1S-CV-463-RWS-JDL**

Project: Expert report, deposition and trial testimony (E. District Texas) on invalidity of Realtime patent.

Status: Jury found Realtime patent invalid at trial.

Akin Gump, LLP, Irvine, CA

Case Personalized Media Communications "PMC" vs. TPV et al, **Case No. 2:15-cv-01366-JRG-RSP**

Project: Declaration in support of claim construction brief.

Status: Parties settled.

Feinberg, Day, LLP, Menlo Park, CA

Case Parthenon Unified Memory Architecture "PUMA" vs. Apple, **Case No. 9:12-cv-80701**

Project: Expert report and deposition concerning unified memory architecture.

Status: Trial stayed at request of PUMA. Parties settled.

Carey, Rodriguez, LLP, Miami

Case *Twentieth Century Fox Home Entertainment, LLC, Paramount Pictures Corp., vs. Nissim Corp., **Case No. 14-81349/813450-cv-MARRA**

Project: Expert witness for patent owner in counterclaims for infringement. Declaration and expert testimony at Markman Hearings concerning DVD standards essential patents.

Status: Parties settled before trial.

*Nissim asserted its patents against Twentieth Century Fox and Paramount. The latter filed a complaint seeking a declaratory judgment of non-infringement and invalidity.

TechKnowledge Law Group, Turner Boyd LLP & O'Melveny & Myers LLP, Los Angeles,

Case Florida Atlantic University Research Corporation vs. Acer, ASUS & TPV, **Case No. 9:12-cv-80701**

Project: Expert testimony at Markman Hearings concerning scan converter design. Expert reports and deposition testimony.

Status: Parties settled before trial.

Finnegan, Henderson, Farabow, Garrett & Dunner, LLP

Case WiLAN vs. Toshiba, **Case No. 1:12-Civ-23744**

Project: Expert reports & deposition testimony concerning digital television design.

Status: Parties settled before trial.

O'Melveny & Myers LLP, Los Angeles & Akin Gump LLP, Dallas

Case Hitachi vs. TPV, **Case No. 2:10-CV-260-JRG**
Project: Expert reports, depositions & trial testimony (E. District Texas) concerning digital television design.
Status: Jury found no infringement of Hitachi's patents by TPV and found Hitachi's patents invalid. (Partially reversed by JMOL)

Fish & Richardson P.C. San Diego
Case Multimedia Patent Trust vs. Apple & LG, **Case No. 10-cv-2618 H**
Project: Expert report, & deposition testimony concerning development of technology, standards and patents for video coding**.**
Status: Jury found no infringement of MPT's patents and found MPT's patents invalid.

Gibson Dunn LLP, Palo Alto
Case Realtime Data vs. Verizon Wireless & T-Mobile, **Case No. 6:10-cv-00493-LED**
Project: Expert reports, depositions and testifying expert in jury trial (E. District Texas) concerning infringement and validity of patents related to data transmission.
Status: Jury found no infringement of Realtime Data's patents by T-Mobile, and found Realtime Data's patents invalid.

O'Melveny & Myers LLP, San Francisco
Case MobileMediaIdeas vs. Apple, **Case No. 10-258-SLR**
Project: Expert reports and deposition, concerning infringement and validity of patents related to MPEG Audio Layer III ("mp3") coding.
Status: Trial bifurcated.

Jones Day, Cleveland
Case Multimedia Patent Trust Vs. Vizio, **Case No. 09-CV-0278-H (CAB)**
Project: Expert report, concerning infringement of patents related to H.264 video coding. (Slated for deposition and jury trial)
Status: Parties settled on the day before my deposition.

Kellog, Huber, et al, Washington, DC
Case Active Video Vs. Verizon, No. 2:10-cv-00248-RAJ-FBS; 2011
Project: Expert report, deposition and testifying expert in jury trial concerning infringement of patents related to video-on-demand
Status: Jury finding of infringement with significantly reduced damages and no finding of willful infringement.

Jones Day, Washington, DC
Case Funai Vs. Vizio, et al, ITC Investigation No. 337-TA-617; 2010
Project: Expert report, deposition and testifying expert in ITC hearing concerning infringement of a patent related to ATSC broadcast standards
Status: Parties settled after the hearing following reports adverse to complainant.

Wilson Sonsini, Goodrich and Rosati, Palo Alto, CA.

Case Project: Terayon vs. RGB Networks; 2007
Expert report for defendant in a contract dispute alleging violation of a non-compete agreement.

Status: Mediation hearing resolved the dispute to the satisfaction of both parties.

Wilmer Cutler Pickering Hale and Dorr, Boston, MA

Case Project: Qualcomm Inc. vs. Broadcom Corp. No. 05 CV 1958 B (BLM); 2007
Expert report and deposition on behalf of Broadcom against assertions of infringement of patents concerning video encoding and decoding, and on Qualcomm's compliance with the policies and procedures for IPR policy in the H.264 standards committee (JVT of ITU-ISO/IEC).

Status: Broadcom found not guilty of infringing Qualcomm's patents. The patents were determined to be not essential for implementing the H.264 standard. Qualcomm found guilty of inequitable behavior in the manner of their participation in the H.264 standards committee. Qualcomm's patents held unenforceable against H.264.

Greenberg Glusker Fields Claman Machtinger & Kinsella.

Case Project: DTS vs. MediaTek; 2005
Expert report for defendant in a contract dispute related to hacking into semiconductor chips to enable functionality for which a license fee was payable.

Status: Mediation hearing resolved the dispute to the satisfaction of both parties. The Mediator personally thanked me for the clarity of my report, which covered technical, business and licensing issues.

Arvay Finley Barristers, Victoria, BC, Canada.

Case Project: AVT Audio Visual Telecommunications vs. University of British Columbia; 2005
Expert report and testimony on behalf of AVT in a contract dispute related to mobile video communication including failure to disclose intellectual property.

Status: Arbitration hearing resulted in adverse ruling to AVT.

Thelen Reid & Priest, San Jose, CA.

Case Project: Toshiba Corp. vs. Trigem Computer Inc. & Trigem America Corp. Case No. CV-03-4558-GHK(AJWx); 2005
Expert report on behalf of Trigem regarding invalidity of patents relating to video and sub-picture data in multimedia computer systems.

Status: Suspended due to insolvency of Trigem.

Morrison & Foerster LLP, San Francisco, CA.

Case	Tivo Inc. vs. Echostar Communications Corp., Echostar DBS Corp., Echostar Technologies Corp ,& EchoStar LLC, Case No. 2-04CV-01; 2005
Project:	Expert report and deposition on behalf of Echostar against assertions of infringement of a patent concerning personal video recorders (PVR).
Status:	Adverse ruling to Echostar.

Pinsent Curtis Biddle, Leeds, UK

Case	Thomson Licensing S.A. and Deutsche Thomson Brandt GmbH vs. Pace Micro Technology PLC. Case No. HC 2000 No. 1584; 2001
Project:	Expert report and slated to testify on behalf of Pace arguing invalidity of patent and defending against assertions infringement of a patent concerning interlaced video coding.
Status:	Parties agreed to settlement on the second day of trial. Settlement terms were very favorable to defendant, and shortly after the trial, Thomson joined the MPEGLA patent pool.

Education

1974	University of Sussex, England	Ph.D., Applied Sciences (EE/CS) Thesis on "Orthogonal Transform Coding of Still and Moving Pictures". All research performed in residence at the Image Processing Institute, USC Los Angeles, CA.
1970	University of Liverpool, England	Bachelor of Engineering with Honours, Physical Electronics

Publications (Partial List)

C Reader, "Orthogonal Transform Coding of Still and Moving Pictures", Ph.D. thesis, U. Sussex, England, 1973.

C. Reader, "Intraframe and Interframe Adaptive Transform Coding." SPIE Vol. 66, pp. 108-117, *Efficient Transmission of Pictorial Information* (1975).

C. Reader, W.H. Chen, "Local Retransmission of Compressed Imagery Data", SPIE Vol. 149 pp. 196-204, *Applications of Digital Image Processing* (1978).

L. Hubble, C. Reader, “State of the Art in Image Display Systems”, SPIE Vol. 199, pp 2-8, *Advances in Display Technology* (1979).

C. Reader, W. D. Flanagan, “Design Considerations for Real-Time Image Processing”, SPIE Vol. 180, *Real-Time Signal Processing II,* (1979).

C. Reader, L. Hubble, “Trends in Image Display Systems”, Proc. IEEE, Vol. 69, No. 5, pp. 606-614, (1981).

J. Adams, C. Patton, C. Reader, D. Zamora, “Hardware for Geometric Warping”, Electronic Imaging, April 1984.

Digital Image Processing Techniques (Computational Techniques), Michael P. Ekstrom (Editor), Chapter describing hardware for real-time image processing and display systems, Academic Press, 1984, pp. 289-360.

C. Reader, et al, “A New Architecture for Real-Time Image Processing,” SPIE Vol. 534, pp. 72-78, *Architectures and Algorithms for Digital Image Processing II* (1985).

B. Thacker, R. Rinaldi, C. Reader, “Multiwindow Displays of Text, Graphics and Images”, SPIE Vol. 757, pp. 104-110, *Methods of Handling and Processing Imagery* (1987).

Keynote opening speech at IEEE Conference on Image Processing, 1994.

C. Reader, “MPEG4: Coding for Content, Interactivity, and Universal Accessibility,” Optical Engineering, Vol. 35, No. 1 pp. 104-108 (1996).

C. Reader, P. Schirling, A. Puri, MPEG Tutorial paper at IEC – NCF/Infovision ’97.

O. Avaro, P.A. Chou, A. Eleftheriadis, C. Herpel, C. Reader, J. Signes, “The MPEG4 Systems and Description Languages: a Way Ahead in Audio Visual Information Representation”, Signal Processing: Image Communication, Vol. 9, No. 4, pp. 385-431 (1997).

C Reader, “What MPEG-4 means to me”, Sig. Proc.: Image Comm. 9(4): 467, 1997

MPEG Video Compression Standard, Edited by Mitchell, Pennebaker, Fogg, Le Gall. Chapman & Hall, 1997. Chapter describing the process of establishing the MPEGLA patent pool, Chapter 16, *MPEG Patents,* pp.357-362.

W Gao, C Reader, F Wu, Y He, L Yu, H Lu, S Yang, T Huang, X Pan, “AVS - The Chinese Next-Generation Video Coding Standard”, Proc. NAB Conf., 1994.

C Reader, “Origins of the performance of H.264/AVC: an account of the development of H.263 and H.264 coding tools”, SPIE Vol. 5909, pp59090W-1-8 Applications of Digital Image Processing XXVIII (2005).

C Reader, “AVS Intellectual Property Rights (IPR) Policy, J. Comput. Sci. & Technol., Co. 21, No. 3 (May 2006).

Q Huang, W Gao, D Zhao, C Reader, “A Real-Time Video Deinterlacing Scheme for MPEG-2 to AVS Transcoding”, Advances in Multimedia Information Processing - PCM 2006, Vol. 4261/2006, Springer Berlin / Heidelberg.

W Gao, S Ma, C Reader, “An End-to-End Application System of AVS: AVS-IPTV in China”. PCM 2007: 50-57

C Reader, “Technical design & IPR analysis for royalty-free video codecs”. PCS 2010: 102-105

J Chen, F Xu, Y He, J D Villasenor, Y Han, Y Xu, Y Rong, C Reader, J Wen, “Efficient Video Coding Using Legacy Algorithmic Approaches”. IEEE Trans. Multimedia 14(1): 111-120 (2012)

W Gao, T Huang, C Reader, W Dou, X Chen, "IEEE Standards for Advanced Audio and Video Coding in Emerging Applications", Computer, vol.47, no. 5, pp. 81-83, May 2014.

Ma S, Huang T, Reader C, Gao W, AVS2-Making video coding smarter [Standards in a Nutshell], IEEE Signal Processing Magazine, vol. 32, no. 2, pp. 172 - 182, 2015.

Wang R, Huang T, Park S-H, Kim J-G, Jang E S, Reader C, Gao W, The MPEG Internet Video-Coding Standard [Standards in a Nutshell], IEEE Signal Processing Magazine, Vol. 33, No. 5, pp. 164-172, Sep. 2016.

Reader C, Patent Landscape for Royalty-Free Video Coding, SPIE Vol. 9971, Sep., 2016

Patents

Patent Number	Date Issued	Title
6,192,073	2000	Methods and apparatus for processing video data
5,845,112	2000	Method for performing dead-zone quantization in a single processor instruction.

Academic Positions

Taught “early bird” classes at Santa Clara University in Image Processing and Digital Signal Processing

Adjunct Professor of the National Engineering Laboratory for Video Technology, in the Computer Science Department at Peking University, Beijing, China.

Professional Associations and Achievements

- ISO/IEC Certificate of appreciation for development of the MPEG4 standard.
- Senior Member IEEE.
- Member SPIE.
- Member ACM.
- Member AES.
- Member SMPTE.

Contact Information

- 1654 Hillstone Ave.
  Escondido
  CA 92029
- 408 867 4884 Mobile-Office
- cliffreader Skype
- CliffReader WeChat
- cliff@reader.com
- www.reader.com