US 20080259981A1

(19) United States

(12) Patent Application Publication

(10) Pub. No.: US 2008/0259981 A1

(43) Pub. Date: Oct. 23, 2008

Wang et al.

(54) **PHOTONIC DEVICE INCLUDING SEMICONDUCTOR STRUCTURE HAVING DOPED REGION WITH ARRAY OF SUBWAVELENGTH RECESSES**

(76) Inventors: **Shih-Yuan Wang**, Palo Alto, CA (US); **Alexandre M. Bratkovski**, Mountain View, CA (US)

Correspondence Address:
HEWLETT PACKARD COMPANY
P O BOX 272400, 3404 E. HARMONY ROAD, INTELLECTUAL PROPERTY ADMINISTRATION
FORT COLLINS, CO 80527-2400 (US)

(21) Appl. No.: **11/788,445**

(22) Filed: **Apr. 19, 2007**

Publication Classification

(51) **Int. Cl.**
H01S 5/02 (2006.01)

(52) **U.S. Cl.** **372/44.01**

(57) **ABSTRACT**

Various aspects of the present invention are directed to photonic devices, such as electro-optic modulators, passive filters, and tunable filters. In one aspect of the present invention, a photonic device includes a semiconductor structure having a p-region and an n-region. A doped region is formed on or within the semiconductor structure. The doped region includes at least one generally periodic array of recesses, with the at least one generally periodic array configured to transmit electromagnetic radiation at a selected dominant wavelength. The selected dominant wavelength is tunable by varying the refractive index of the semiconductor structure.

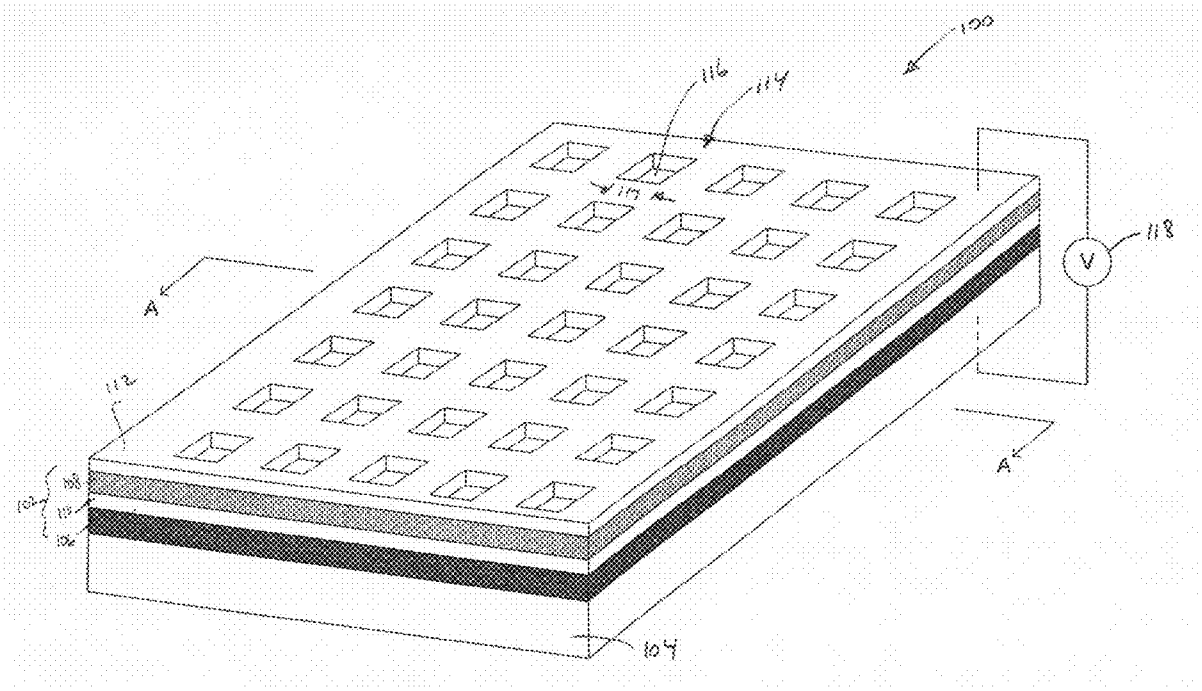

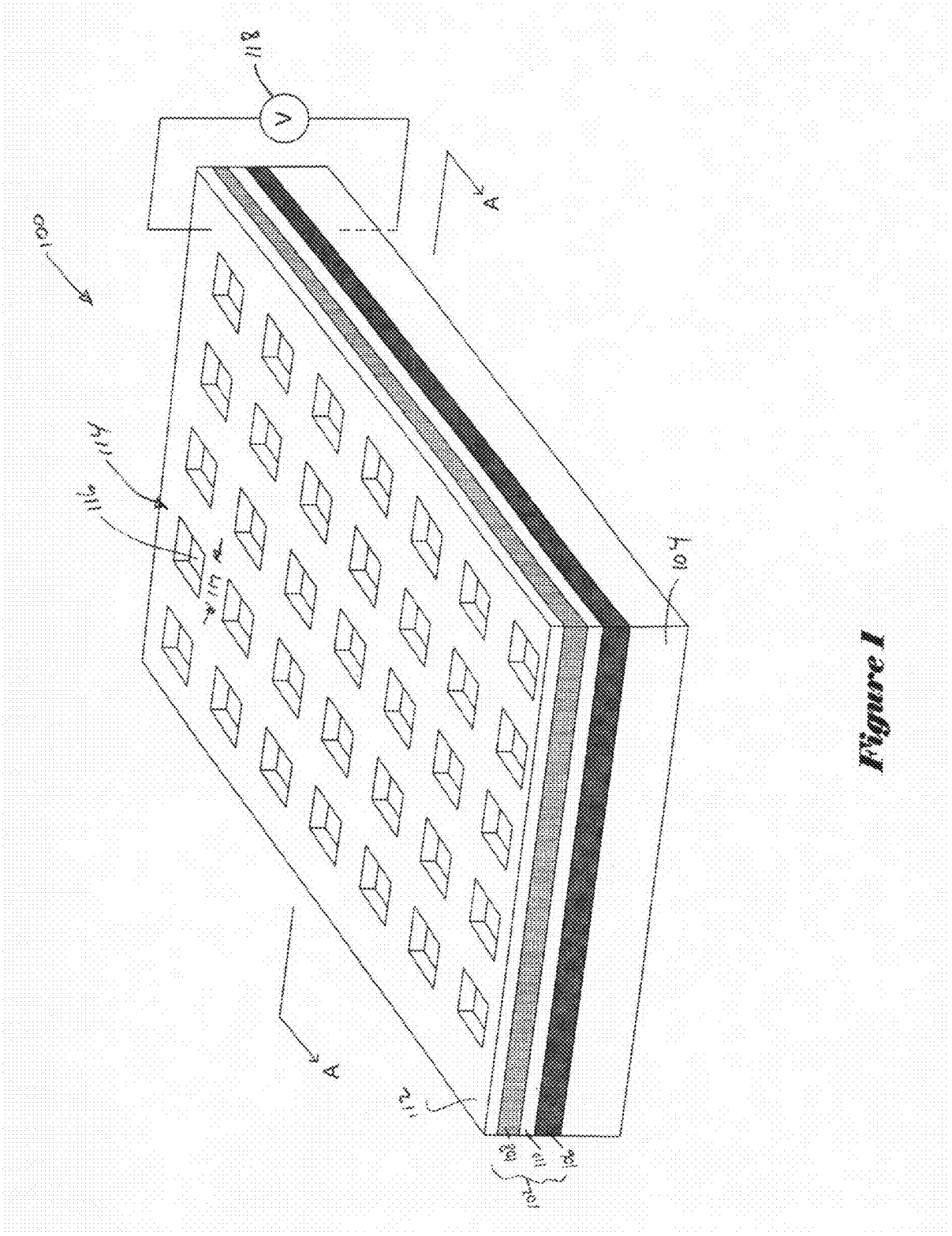

Figure 1

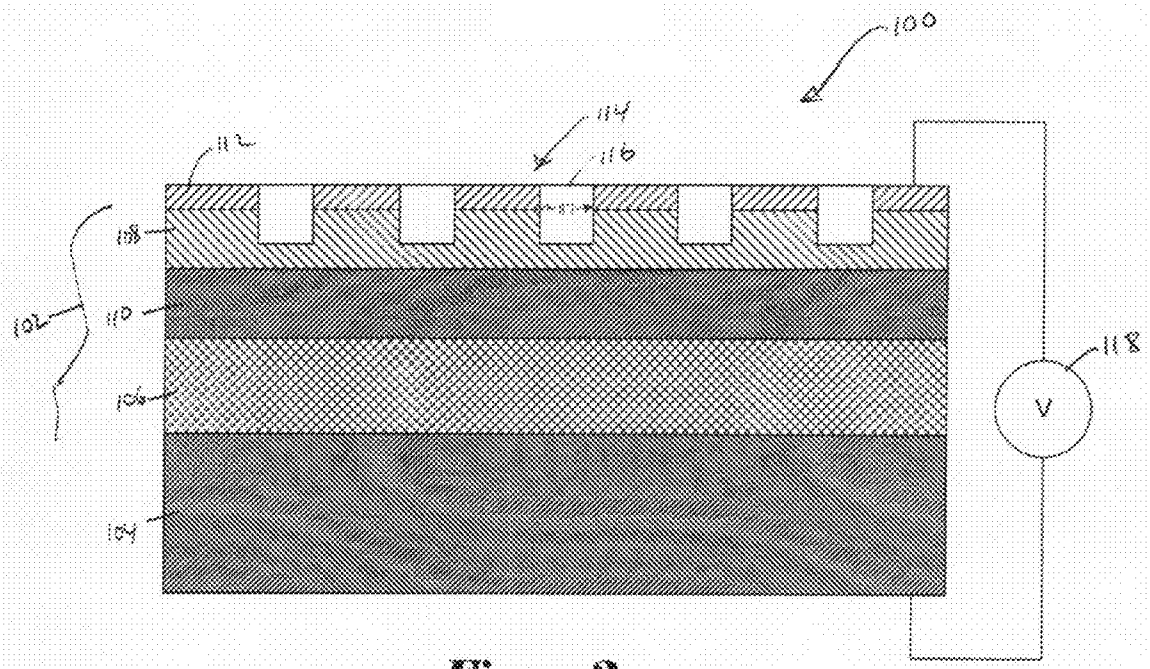

Figure 2

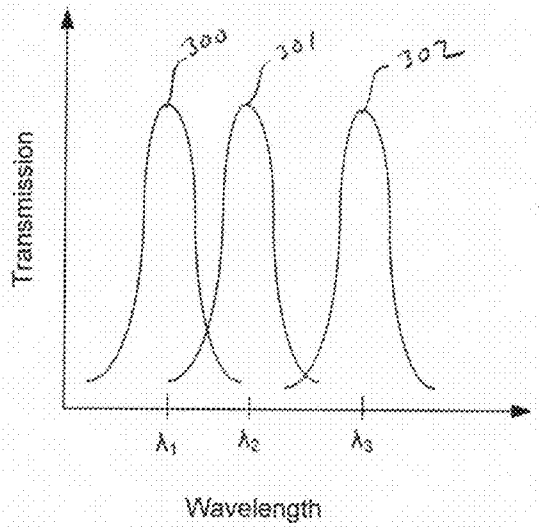

Figure 3

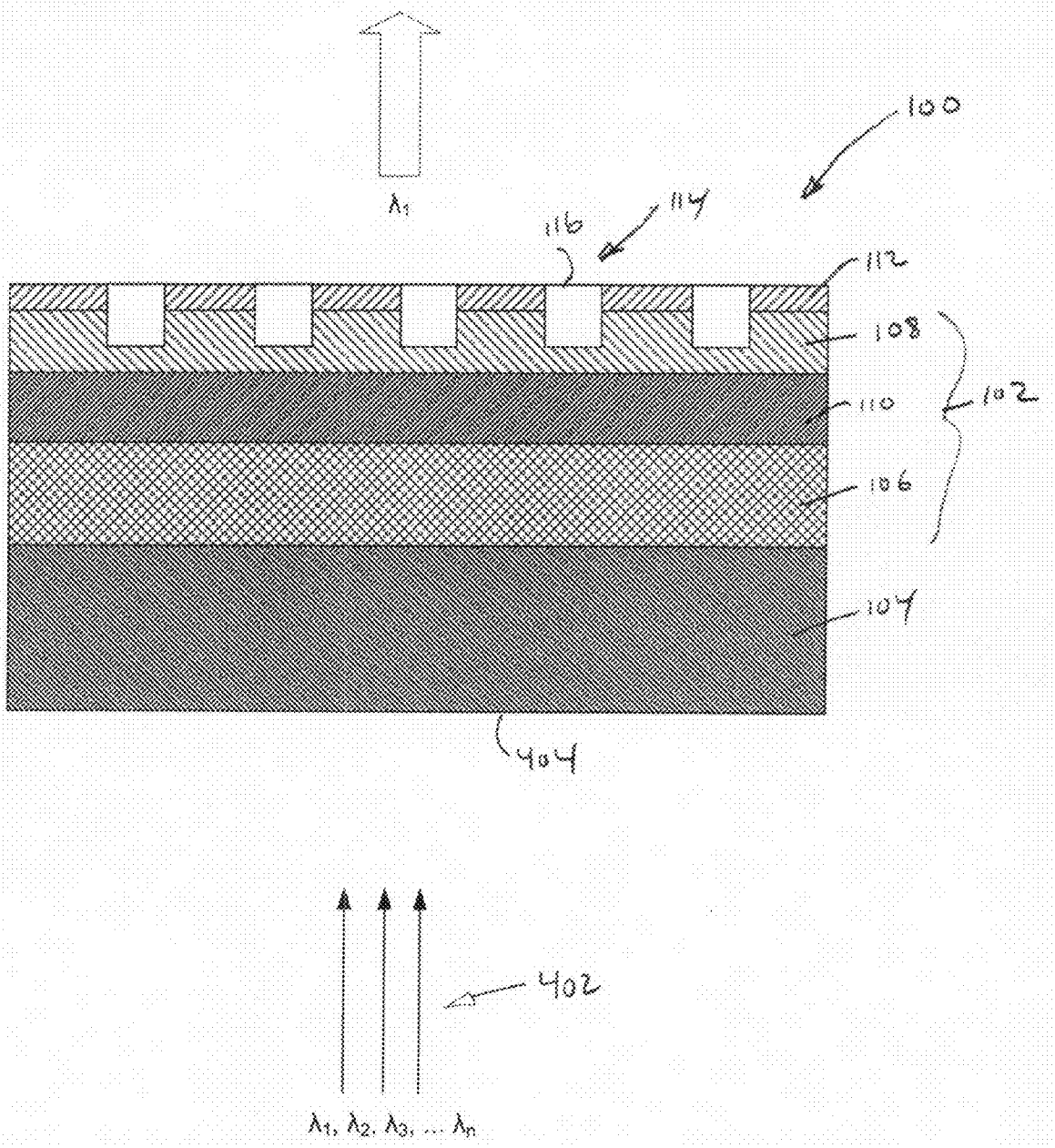
100
λ_1
116
114
112
108
110
102
106
107
404
402
$\lambda_1, \lambda_2, \lambda_3, \ldots \lambda_n$

Figure 4

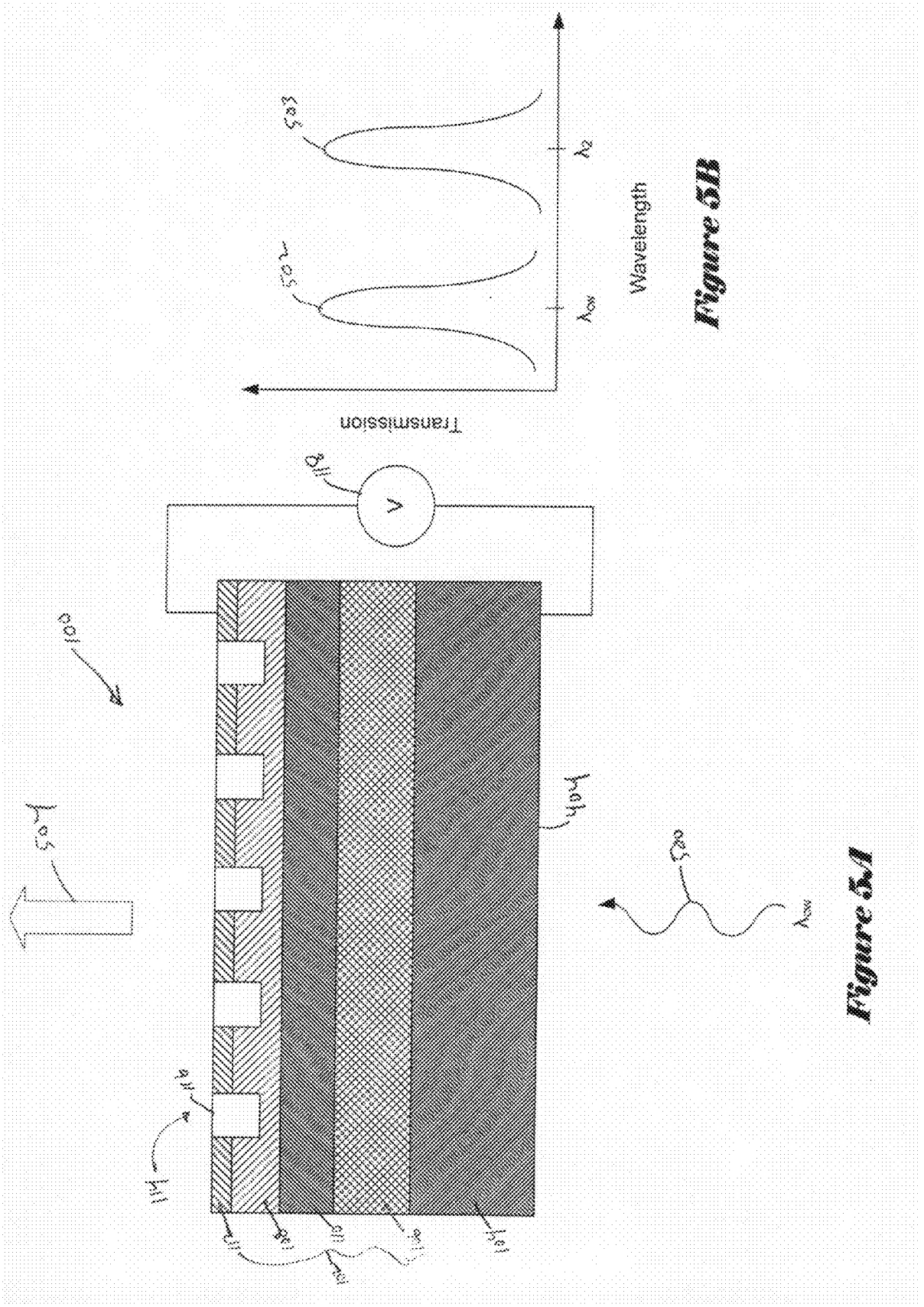

Figure 5B

Figure 5A

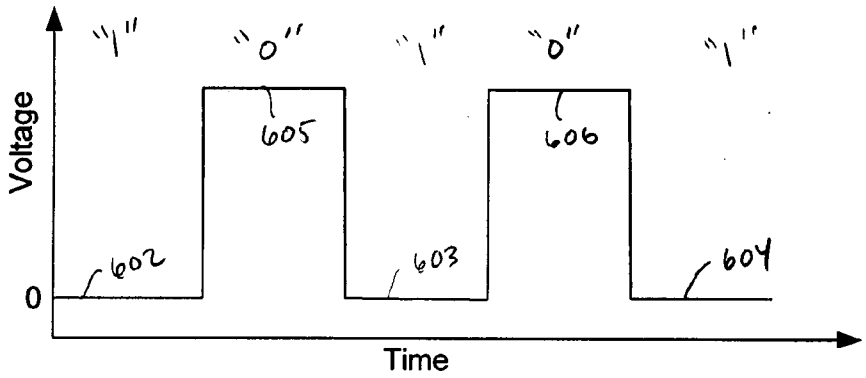

Figure 6A

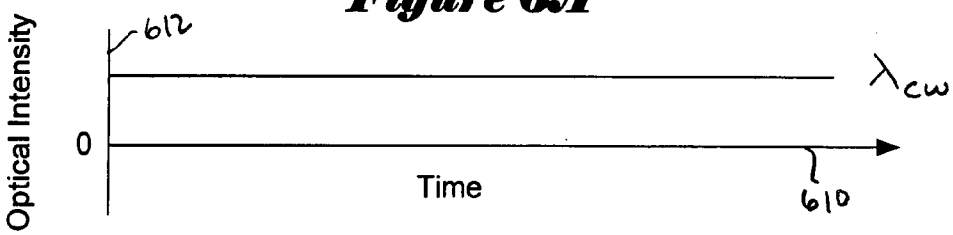

Figure 6B

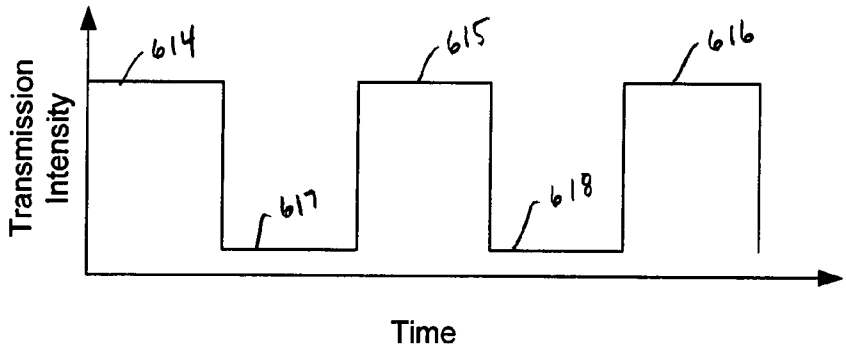

Figure 6C

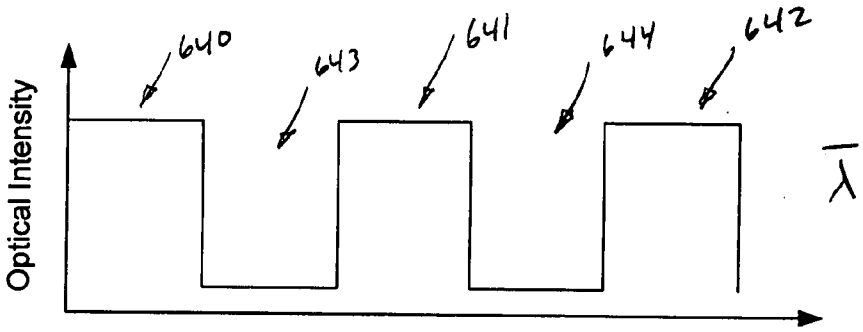

Figure 6D

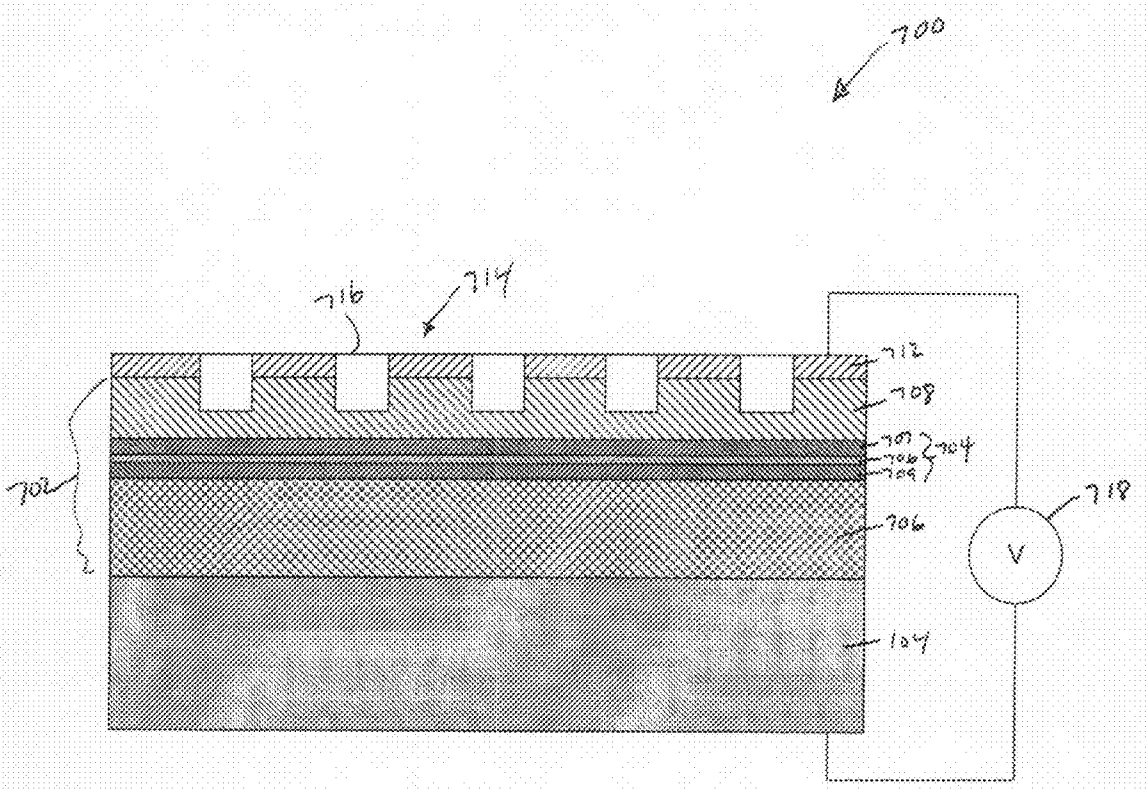

Figure 7

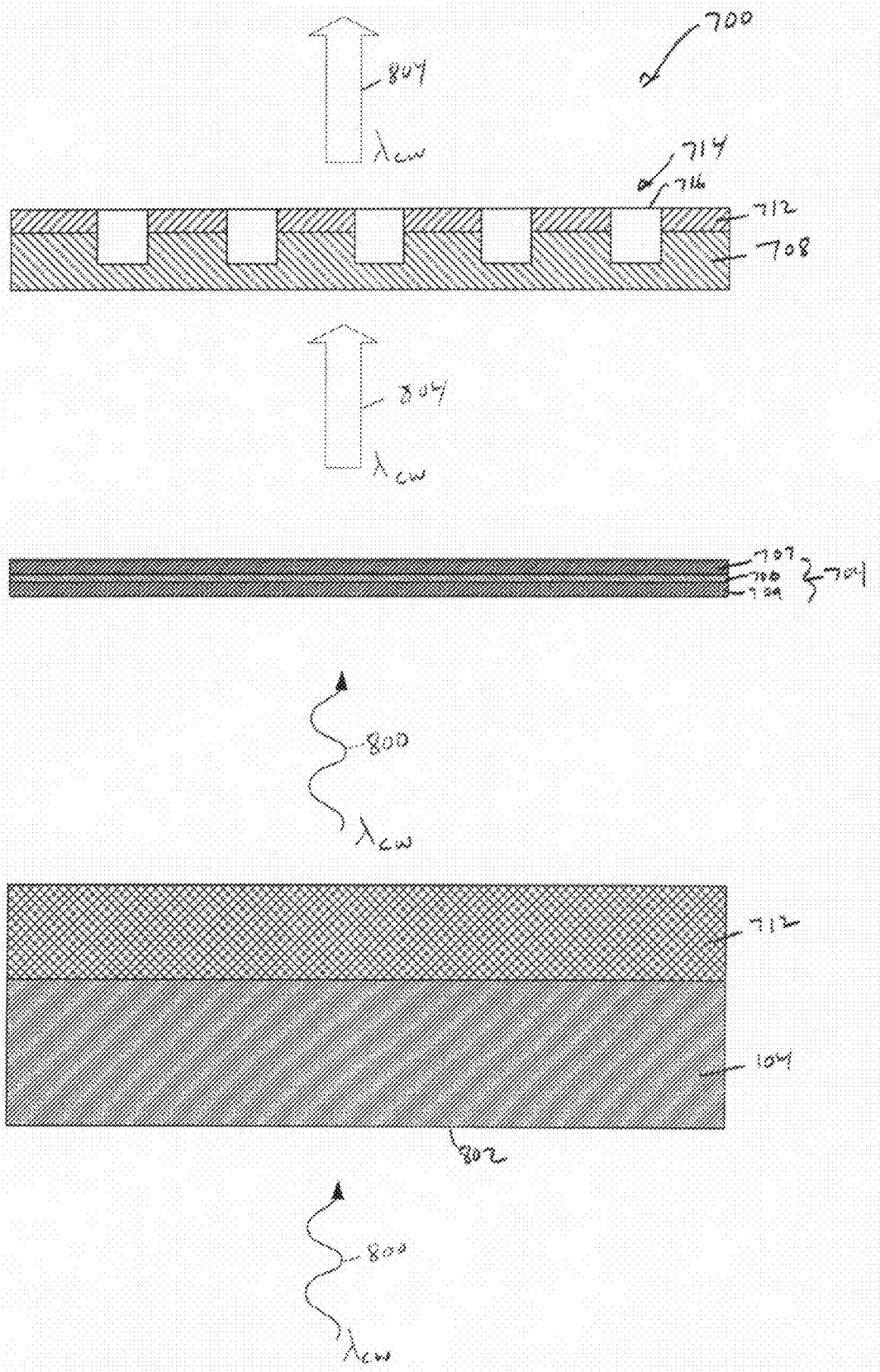
700
804
λ_{cw}
714
716
712
708
804
λ_{cw}
707
704
800
λ_{cw}
712
104
802
800
λ_{cw}

Figure 8

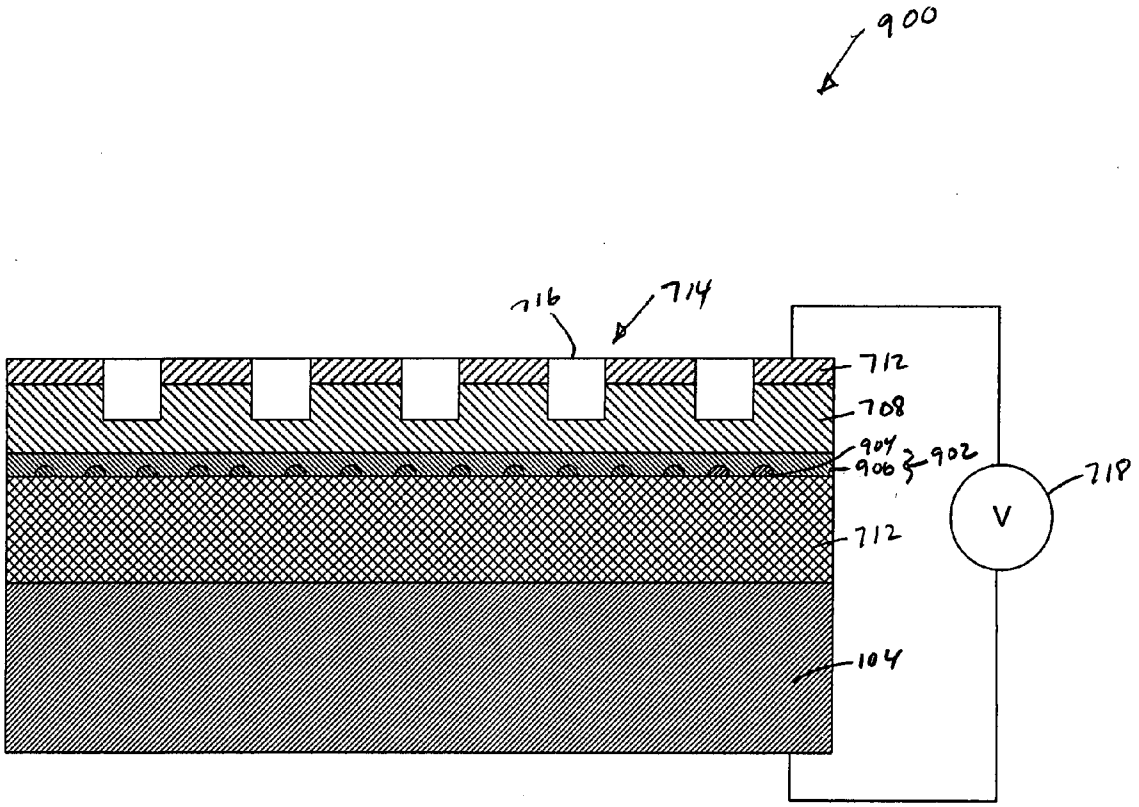

Figure 9

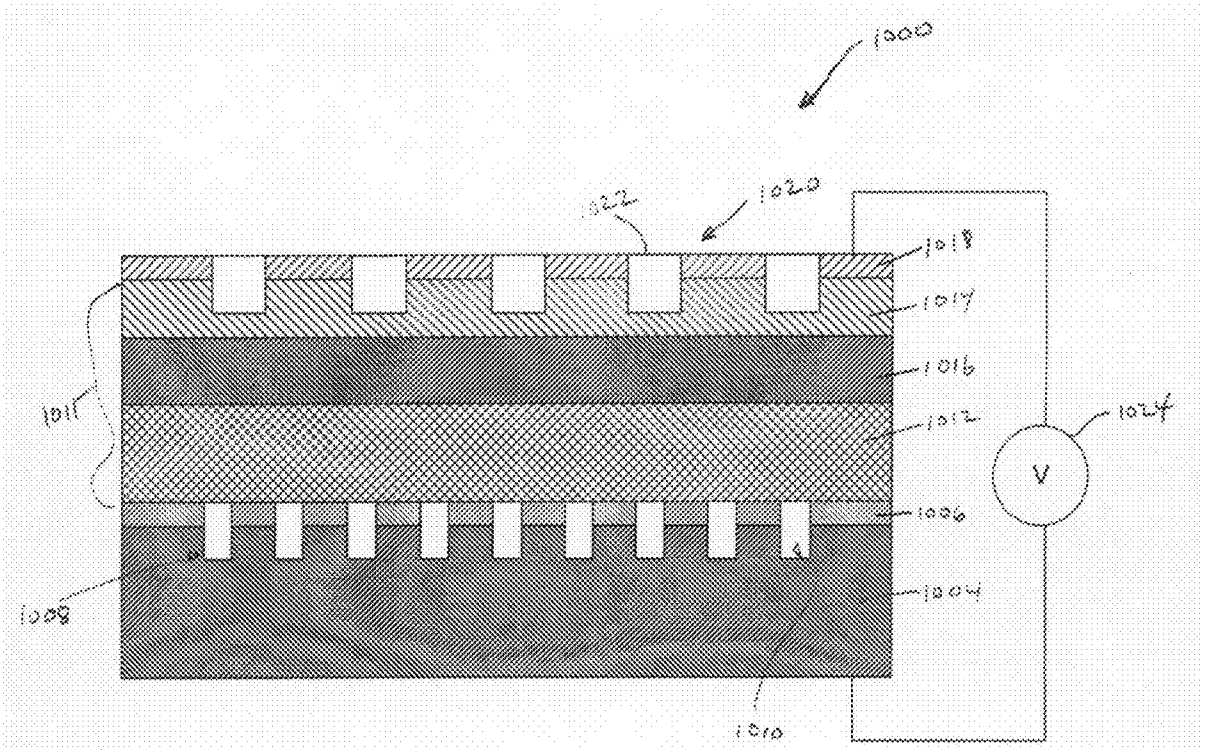

Figure 10

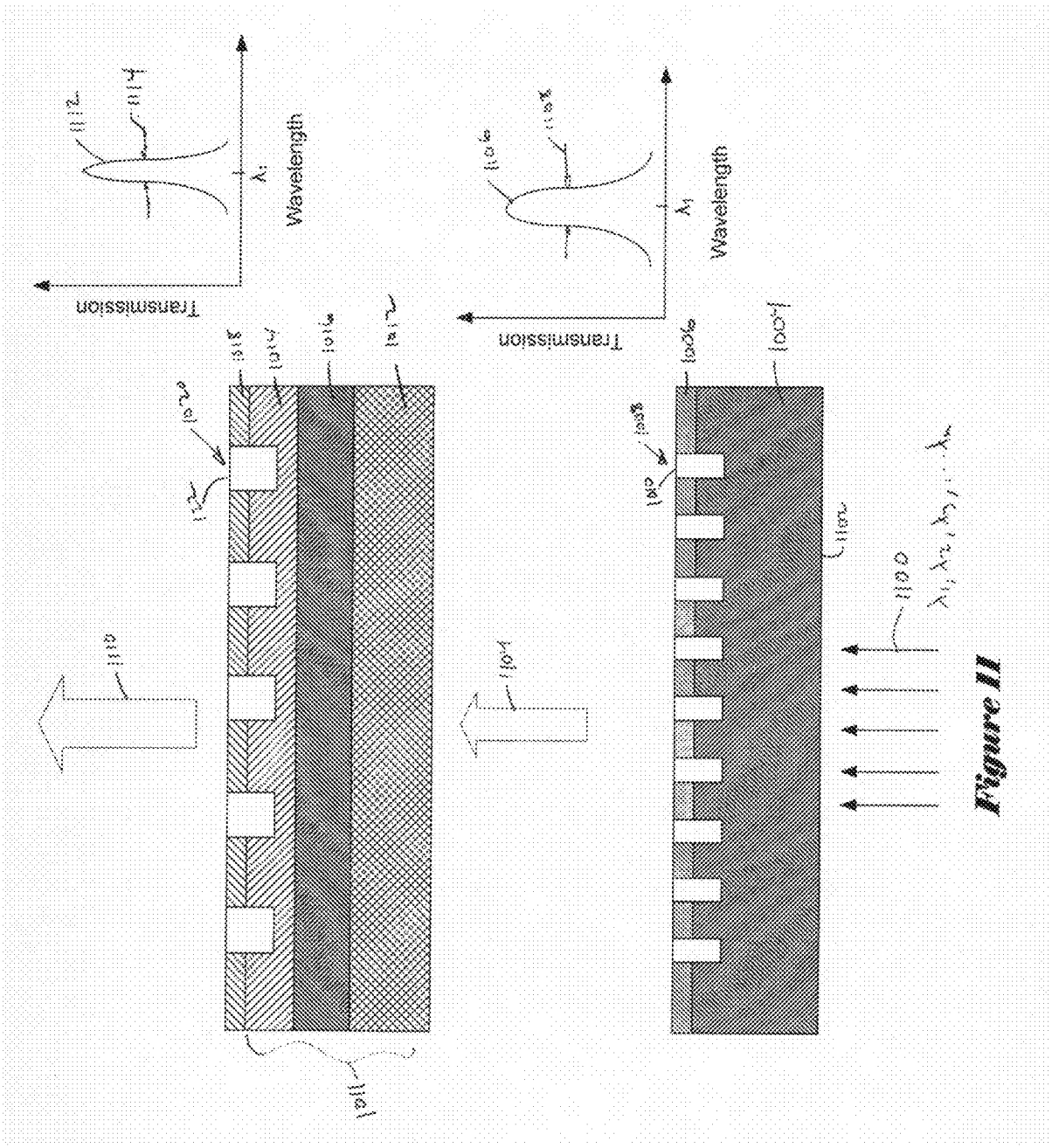

Figure 11

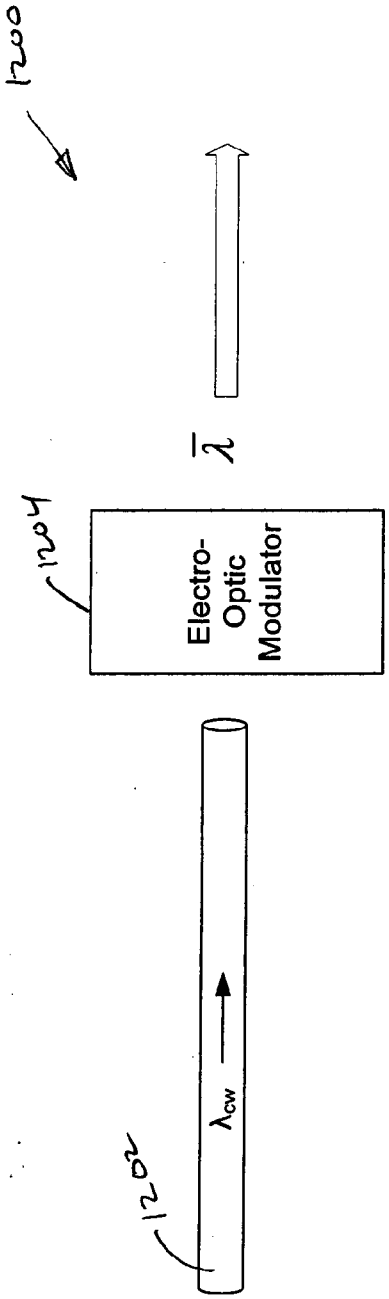

Figure 12

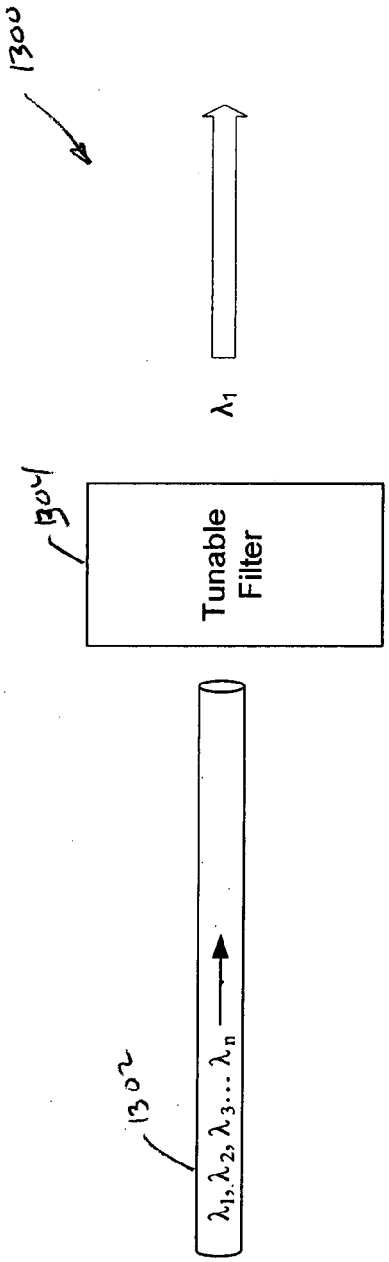

Figure 13

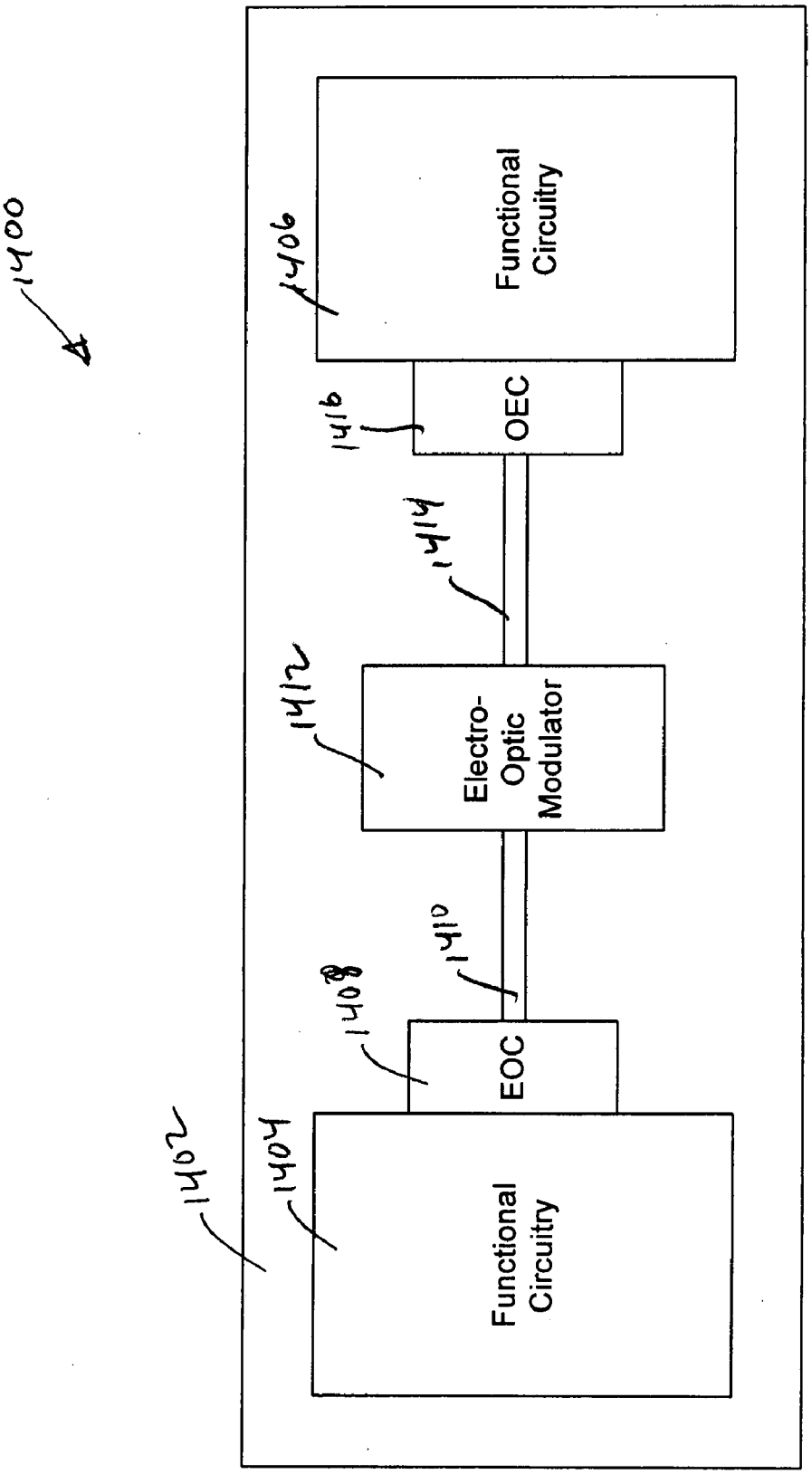
1400
1406
Functional Circuitry
1416
OEC
1414
1412
Electro-Optic Modulator
1410
1408
EOC
1404
1402
Functional Circuitry

Figure 14

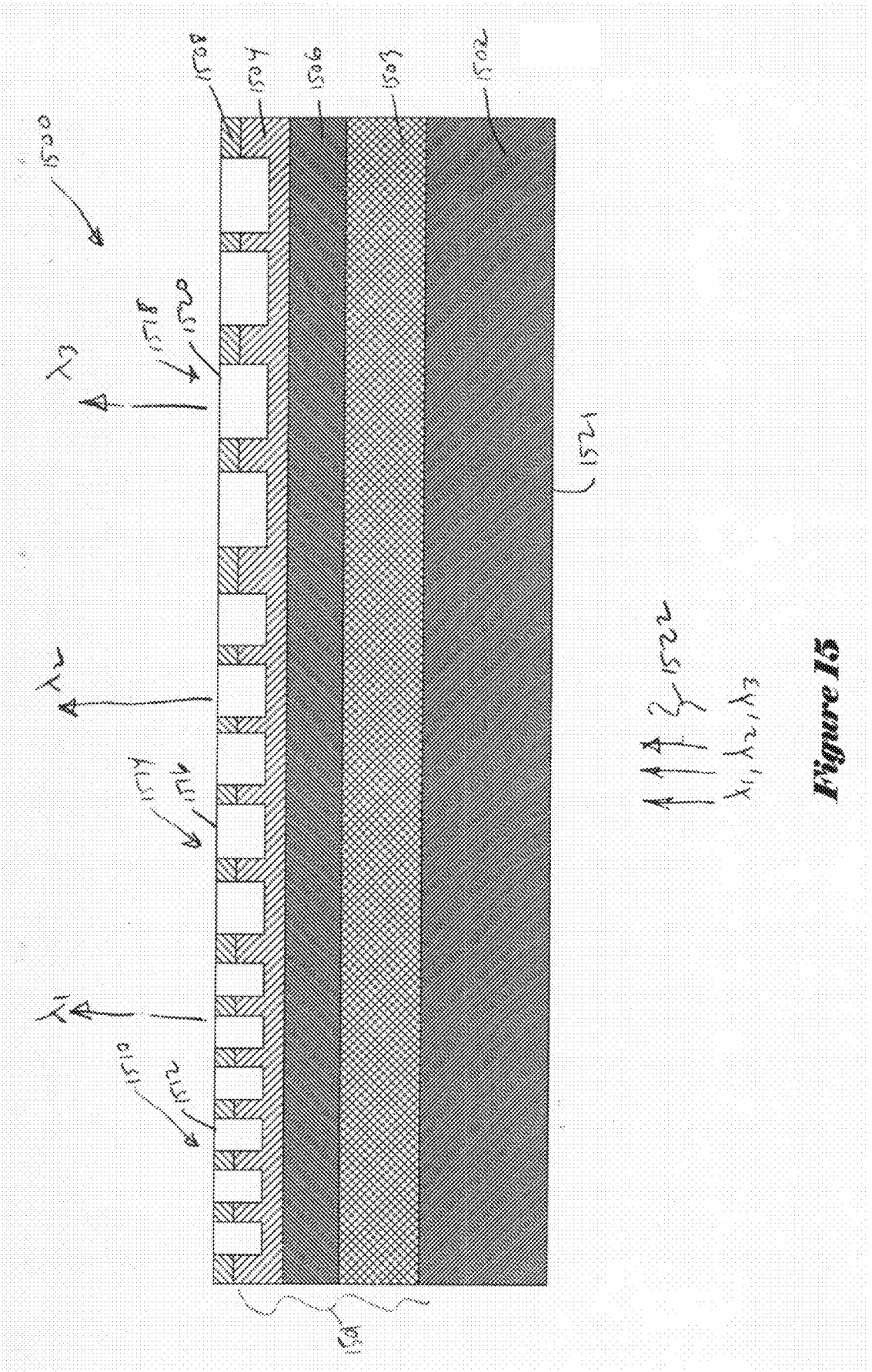
1500
1508
1504
1506
1503
1502
1518
1520
1521
1522
1514
1516
1510
1512
λ1
λ2
λ3
λ1, λ2, λ3

Figure 15

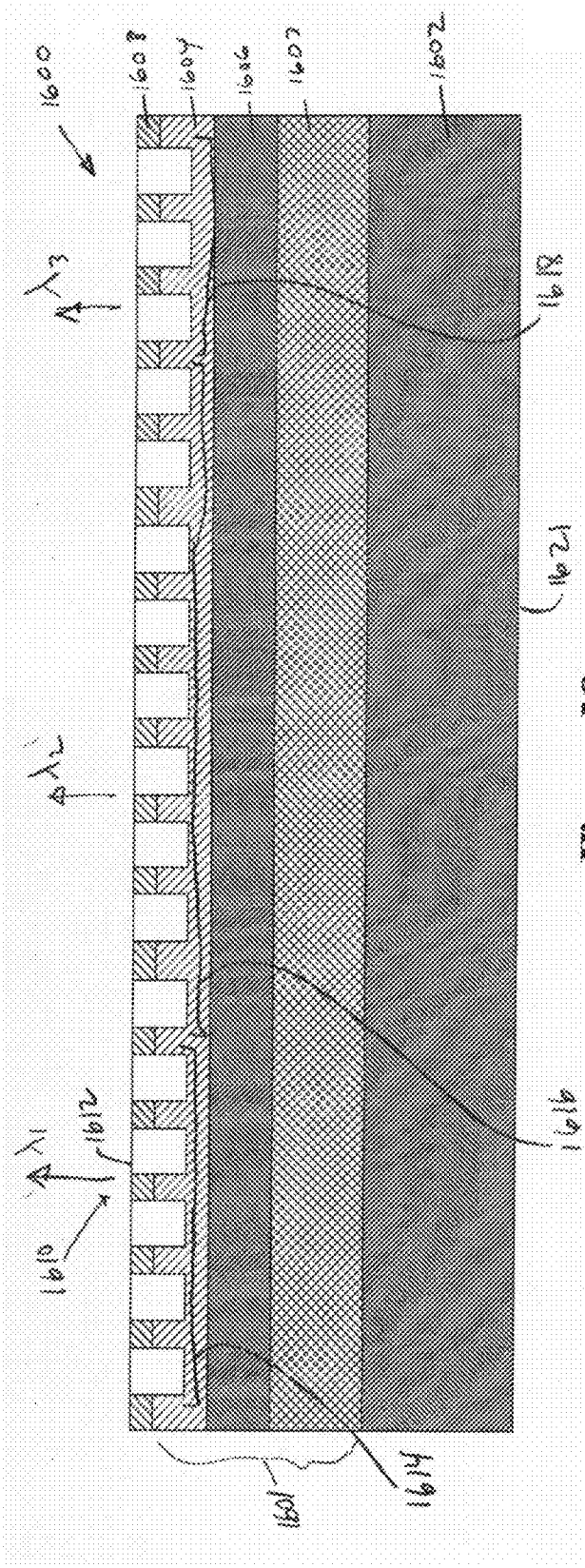

Figure 16

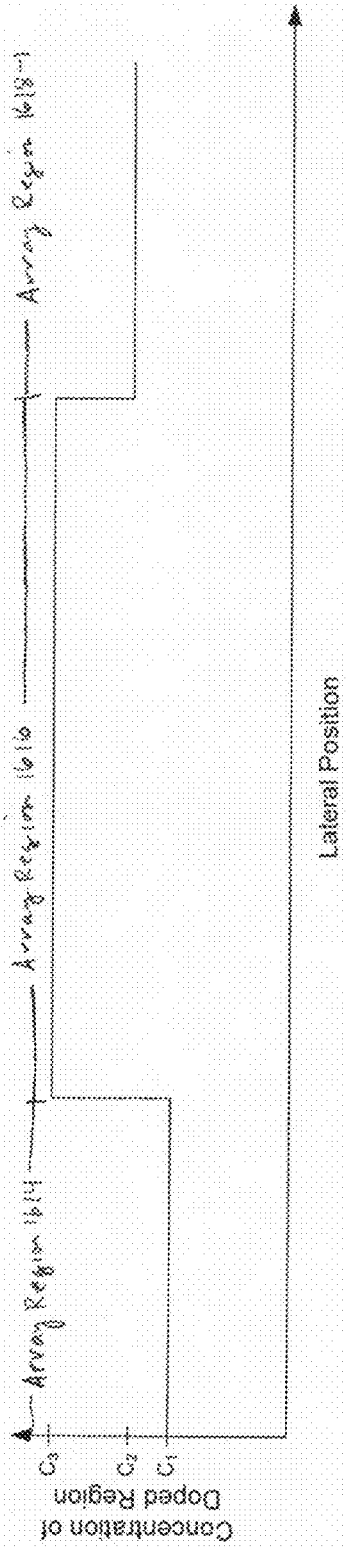

Figure 17

PHOTONIC DEVICE INCLUDING SEMICONDUCTOR STRUCTURE HAVING DOPED REGION WITH ARRAY OF SUBWAVELENGTH RECESSES

TECHNICAL FIELD

[0001] Embodiments of the present invention relate generally to photonic devices, such as electro-optic modulators, passive filters, and tunable filters.

BACKGROUND

[0002] Since the late 1970s, waveguides have increasingly supplanted conventional signal lines for transmitting information. Rather than encoding information in electrical signals and transmitting the encoded electrical signals via signal lines, the same information can be encoded in a channel of electromagnetic radiation and transmitted via waveguides, such as optical fibers, ridge waveguides, and photonic crystal waveguides. The term "channel," also called "optical channel," refers to electromagnetic radiation transmitted at one wavelength through a waveguide. Transmitting information encoded in channels via waveguides has a number of advantages over transmitting encoded electrical signals via signal lines. First, degradation or loss is much less for channels transmitted via waveguides than for electrical signals transmitted via signal lines. Second, waveguides can be fabricated to support a much higher bandwidth than signal lines. For example, a single copper or aluminum wire can only transmit a single electrical signal, while a single optical fiber can be configured to transmit about 100 or more channels. Finally, electromagnetic radiation provides, in general, a much higher transmission rate.

[0003] Recently technological advances in semiconductor fabrication techniques have made it possible to fabricate waveguides that can be integrated with electronic devices, such as memory and processors, to form photonic integrated circuits ("PICs"), where the waveguides may be used to transmit information encoded in channels between the electronic devices. PICs are the photonic equivalent of electronic integrated circuits and may be implemented on a small substrate of semiconductor material that forms the base of the electronic devices.

[0004] In order to effectively implement PICs, passive and active photonic components are needed. Waveguides, attenuators, and filters are examples of passive photonic components that can be fabricated using conventional epitaxial and lithographic methods and may be used to direct the propagation of channels between electronic devices and filter channels. Active photonic components include electro-optic modulators. Accordingly, physicists, engineers, and computer scientists continue to seek improved active and passive photonic components for use in PICs or other photonic systems.

SUMMARY

[0005] Various aspects of the present invention are directed to photonic devices, such as electro-optic modulators, passive filters, and tunable filters. In one aspect of the present invention, a photonic device includes a semiconductor structure having a p-region and an n-region. A doped region is formed on or within the semiconductor structure. The doped region includes at least one generally periodic array of recesses, with the at least one generally periodic array configured to transmit electromagnetic radiation at a selected dominant wavelength. The selected dominant wavelength is tunable by varying the refractive index of the semiconductor structure.

BRIEF DESCRIPTION OF THE DRAWINGS

[0006] The drawings illustrate various embodiments of the present invention, wherein like reference numerals refer to like elements or features in different views or embodiments shown in the drawings.

[0007] FIG. **1** is a schematic isometric view of a photonic device according to one embodiment of the present invention.

[0008] FIG. **2** is a schematic cross-sectional view of the photonic device shown in FIG. **1**.

[0009] FIG. **3** is a graph illustrating zero-order transmission spectrums through the periodic array of the photonic device shown in FIGS. **1** and **2** for different periodic array designs.

[0010] FIG. **4** is a schematic cross-sectional view of the photonic device shown in FIG. **1** operated as a filter or a wavelength-division multiplexer according to one embodiment of the present invention.

[0011] FIG. **5**A is a schematic cross-sectional view of the photonic device shown in FIG. **1** operated as an electro-optic modulator according to one embodiment of the present invention.

[0012] FIG. **5**B is a graph of different zero-order transmission spectrums for the periodic array of the photonic device shown in FIG. **5**A when different selected voltages are applied to the photonic device.

[0013] FIG. **6**A is a graph of a periodic voltage pattern that can be applied to the photonic device shown in FIG. **5**A to periodically vary the refractive index adjacent the periodic array of the photonic device according to one embodiment of the present invention.

[0014] FIG. **6**B is graph of the optical intensity of a carrier channel.

[0015] FIG. **6**C is a graph of the time varying transmission intensity through the photonic device shown in FIG. **5**A caused by application of the periodic voltage shown in FIG. **6**A to the photonic device.

[0016] FIG. **6**D is a graph of the time varying optical intensity of an encoded channel produced by modulating the voltage across the photonic device shown in FIG. **5**A according to voltage pattern shown in FIG. **6**A.

[0017] FIG. **7** is a schematic cross-sectional view of a photonic device including a quantum-well structure operable to provide gain at a wavelength of a carrier channel according to another embodiment of the present invention.

[0018] FIG. **8** is a schematic exploded cross-sectional view illustrating the operation of the photonic device shown in FIG. **7**.

[0019] FIG. **9** is a schematic cross-sectional view of a photonic device including a gain region having a number of quantum dots operable to provide gain at a wavelength of a carrier channel according to another embodiment of the present invention.

[0020] FIG. **10** is a schematic cross-sectional view of a photonic device including two different periodic arrays in series according to yet another embodiment of the present invention.

[0021] FIG. **11** is a schematic exploded cross-sectional view illustrating the operation of the photonic device shown in FIG. **10**.

[0022] FIG. **12** is a diagram of an optical fiber system that may employ any of the disclosed electro-optic modulators according to one embodiment of the present invention.

[0023] FIG. **13** is a diagram of an optical fiber system that may employ any of the disclosed tunable filters according to another embodiment of the present invention.

[0024] FIG. **14** is a functional block diagram of a PIC that may employ any of the disclosed electro-optic modulators according to yet another embodiment of the present invention.

[0025] FIG. **15** is a schematic cross-sectional view of a photonic device that includes a doped region having a number of different periodic arrays according to another embodiment of the present invention.

[0026] FIG. **16** is a schematic cross-sectional view of a photonic device that includes a periodic array having subwavelength-dimensioned recesses and a dopant concentration that varies laterally according to another embodiment of the present invention.

[0027] FIG. **17** is a graph of the dopant concentration in the doped region shown in FIG. **16**.

DETAILED DESCRIPTION OF VARIOUS EMBODIMENTS

[0028] Various embodiments of the present invention are directed to photonic devices, such as electro-optic modulators, passive filters, and tunable filters. FIGS. **1** and **2** show a photonic device **100**, which can be operated as an electro-optic modulator, a passive filter, or a tunable filter, according to one embodiment of the present invention. The photonic device **100** includes a semiconductor structure **102** formed on a substrate **104**. The semiconductor structure **102** includes an n-semiconductor region **106**, a p-semiconductor region **108**, and an intrinsic semiconductor region **110** located between the n-semiconductor region **106** and the p-semiconductor region **108**.

[0029] In the illustrated embodiment, a thin doped region **112** is formed on or within the p-semiconductor region **108**. The thin doped region **112** may be formed within the p-semiconductor region **108** by doping the p-semiconductor region **108**. For example, a monolayer of dopant may be deposited on the p-semiconductor region **108** by sputtering, evaporation, atomic beam deposition, or another suitable technique. The monolayer and the semiconductor structure **102** may be annealed to diffuse the dopant into the p-semiconductor region **108** and form the thin doped region **112** having a delta-doped profile. A delta-doped profile generally follows a Dirac delta function and a maximum dopant concentration of the delta-doped profile may be about 10^{18} cm^{-3} to about 10^{21} cm^{-3}. The thin doped region **112** may have a thickness of, for example, about 2 nm or less.

[0030] A periodic array **114** of subwavelength-dimensioned recesses **116** is formed within the thin doped region **112** using a number of different selective material removal techniques, such as photolithography, electron-beam lithography, focused-ion-beam milling, or another suitable technique. Each of the subwavelength-dimensioned recesses **116** has a lateral dimension **117**, about one-fifth to about one-tenth the wavelength of electromagnetic radiation that can be transmitted through the periodic array **114**. As shown in FIG. **2**, each of the subwavelength-dimensioned recesses **116** extends past the thin doped region **112** and into the p-semiconductor region **108**. Although each of the subwavelength-dimensioned recesses **116** is shown having a rectangular geometry, each of the subwavelength-dimensioned recesses **116** may have another geometry, such as a circular cross-sectional geometry or another suitable geometry. Moreover, the arrangement of the subwavelength-dimensioned recesses **116** represents merely one embodiment of the present invention, and other arrangements may be used.

[0031] The periodic array **114** of the subwavelength-dimensioned recesses **116** is configured to transmit electromagnetic radiation at a discrete, narrow wavelength band having a selected dominant wavelength at which maximum transmission through the periodic array **114** occurs. FIG. **3** shows a graph of the zero-order transmission spectrum through the thin doped region **112** for different configurations for the periodic array **114**. The zero-order transmission spectrum is the spectrum where the wavevector of the incident electromagnetic radiation is substantially parallel to the wavevector of the electromagnetic radiation transmitted through the subwavelength-dimensioned recesses **116**. For example, for one periodic array design, the zero-order transmission spectrum has a dominant wavelength at λ_1. For different periodic array designs, the zero-order transmission spectrum may be selectively changed. For example, zero-order transmission spectrums **301** and **302** have dominant wavelengths at λ_1 and λ_2, respectively. It is noted that the zero-order transmission spectrums **300-302** only show the lowest-order peak because the intensity of the lowest-order peak is significantly greater than the intensity of the higher order peaks. Accordingly, as used herein the term "dominant wavelength" refers to a wavelength of a lowest-order peak in a zero-order transmission spectrum.

[0032] The wavelength at which the dominant wavelength occurs and the shape of the zero-order transmission spectrum may be controllably varied by properly selecting the spacing of the recesses **116** of the periodic array **114**, the lateral dimension **117** of the recesses **116**, the thickness of the thin doped region **112**, the geometry of the recesses **116**, the free-electron concentration in the thin doped region **112**, and the dielectric constant of the medium adjacent to the periodic array **114**. It is currently believed that the enhanced transmission spectrum of electromagnetic radiation through the periodic array **114** of subwavelength dimensioned recesses **116** is a result of the periodic array **114** trapping electromagnetic waves and/or interaction of surface plasmon polaritons excited adjacent to the subwavelength-dimensioned recesses **116** in the thin doped region **112** at the interface between the p-semiconductor region **108** and the thin doped region **112** that interact with evanescent waves diffracted or scattered by the subwavelength recesses **116**. Accordingly, varying any of the above-mentioned parameters varies the frequency of electromagnetic radiation capable of exciting surface plasmon resonance modes at the interface between the thin doped region **112** and the p-semiconductor region **108** and, consequently, the zero-order transmission spectrum and the dominant wavelength transmitted through the subwavelength recesses **116** of the periodic array **114**.

[0033] As discussed briefly above, the zero-order transmission spectrum of the periodic array **114** may be selectively varied by altering the dielectric constant or refractive index of the medium adjacent to the periodic array **114**. With reference to FIGS. **1** and **2**, in various embodiments of the present invention, the photonic device **100** may further include a voltage source **118** coupled to the thin doped region **112** and the substrate **104**. The voltage source **118** is operable to selectively apply a voltage across the thin doped region **112**

and the substrate **104**. Injecting electrons from the n-semiconductor region **106** into the p-semiconductor region **108** of the semiconductor structure **102** by applying a forward or reverse bias voltage with the voltage source **402** enables controllably varying the refractive index of the semiconductor structure **102** and, consequently, the refractive index of the p-semiconductor region **108** that is adjacent to the semiconductor structure **102**. The zero-order transmission spectrum of the periodic array **114** depends on the structure and composition of the periodic array **114** (i.e., lateral dimension or diameter of the recesses **116**, spacing of the recesses **116**, free-electron concentration of the doped region **112**, etc.) and the refractive index of the material adjacent to the periodic array **114**. Accordingly, by controllably varying the refractive index of the semiconductor structure **102** adjacent to the periodic array **114**, the wavelength of electromagnetic radiation that can be transmitted through the recesses **116** of the periodic array **114** may be selectively varied. For example, the zero-order transmission spectrums **300-302** may correspond to different voltages applied by the voltage source **118** and, consequently, different refractive indices for the semiconductor structure **102**.

[0034] The semiconductor structure **102**, thin doped region **112**, and substrate **104** of the photonic device **100** may be formed from a number of different materials. For example, the n-semiconductor region **106** and the p-semiconductor region **108** may each be made from suitably doped single-crystal silicon. When the p-semiconductor region **108** is formed from silicon, the thin doped region **112** may formed by depositing a monolayer of platinum, titanium, tellurium, or cobalt. The monolayer is reacted with the silicon of the p-semiconductor region **108** to form a metal silicide. In other embodiments of the present invention, the n-semiconductor region **106** and the p-semiconductor region **108** may each be formed from suitably doped III-V semiconductor compounds, such as gallium arsenide ("GaAs") or indium phosphide ("InP"). In such embodiments, the thin doped region **112** may be formed by depositing a monolayer of carbon and annealing the monolayer to diffuse the carbon into the p-semiconductor region **108**. It should also be noted that the positions of the n-semiconductor region **108** and the p-semiconductor region **110** may be switched. Accordingly, in other embodiments of the present invention, the thin doped region **112** may be formed in the n-semiconductor region **108**.

[0035] FIG. **4** illustrates operation of the photonic device **100** as a passive filter that only allows a narrow band of electromagnetic radiation, with one selected dominant wavelength, through the periodic array **114**. In operation, electromagnetic radiation **402** having a wide range of wavelengths $\lambda_1, \lambda_2, \lambda_3 \ldots \lambda_n$ may be directed at a back surface **404** of the substrate **104** (as shown in FIG. **4**) or an opposing front surface of the thin doped region **112**. The electromagnetic radiation **402** that has an energy less than that of the energy band gap of the substrate **104** and the semiconductor structure **102** is transmitted through the substrate **104** and the semiconductor structure **102**. The periodic array **114** may be configured to only allow transmission of one dominant wavelength of electromagnetic radiation through the periodic array **114**. For example, the periodic array **114** may be configured so that only a zero-order transmission spectrum with a dominant wavelength at λ_1 is transmitted through the periodic array **114**.

[0036] In a mode of operation according to another embodiment of the present invention, the photonic device **100** may be operated as a tunable filter for use as a wavelength-division multiplexer in, for example, an optical fiber system. In such an embodiment, the dominant wavelength allowed to be transmitted through the periodic array **114** may be controllably varied by applying a voltage across the semiconductor structure **102** to change the refractive index of the semiconductor structure **102**. Accordingly, by applying a selected voltage, the dominant wavelength transmitted through the periodic array **114** may be controllably changed to allow, for example, electromagnetic radiation at a wavelength λ_2 or λ_3, to be transmitted through the periodic array **114** instead of electromagnetic radiation at a wavelength λ_1.

[0037] The ability to rapidly vary the refractive index of the semiconductor structure **102** enables modulating the intensity of a carrier channel transmitted through the photonic device **100** and, thus, encode information. FIG. **5**A shows a mode of operation, according to another embodiment of the present invention, in which the photonic device **100** is operated as an electro-optic modulator. As shown in FIG. **5**A, a carrier channel **500** having a wavelength λ_{cw} irradiates the back surface **404** of the photonic device **100**. Because the energy of the carrier channel **500** is less than the energy band gap of the substrate **104** and the semiconductor structure **102**, the carrier channel **500** is transmitted through the substrate **104** and the semiconductor structure **102**. The carrier channel **500** irradiates the periodic array **114** of the thin doped region **112**.

[0038] FIG. **5**B shows a zero-order transmission spectrum **502** for the periodic array **114** when the voltage source **118** does not apply a voltage or applies a selected non-zero voltage. The zero-order transmission spectrum **502** has a dominant wavelength at λ_{cw}, which is the wavelength of the electromagnetic carrier wave **500**. Applying a second voltage state with the voltage source **118** changes the refractive index of the semiconductor structure **102** to cause the zero-order transmission spectrum **502** to shift to a zero-order transmission spectrum **503** having a dominant wavelength λ_2. As will be discussed in more detail below with respect to FIGS. **6**A through **6**D, by rapidly varying the voltage applied by the voltage source **118** to shift the zero-order transmission spectrums of the periodic array **114** from the zero-order transmission spectrum **502** to **503**, the optical intensity of the carrier channel **500** may be modulated to produce an amplitude modulated carrier channel **504** carrying encoded information.

[0039] FIG. **6**A shows a graph of a periodic voltage pattern **600** that may be applied to the semiconductor structure **102** using the voltage source **118** (FIG. **5**A) to produce the amplitude modulated carrier channel **504** according to one embodiment of the present invention. It should be emphasized that the voltage pattern **600** is merely one example of a suitable voltage pattern and other voltage patterns may be used. The voltage pattern **600** encodes a five-digit binary number "10101" generated by the voltage source **118** shown in FIG. **5**A. Relatively low voltage levels **602-604** correspond to the binary number "1," and relatively high voltage levels **605** and **606** correspond to the binary number "0." FIG. **6**B shows a graph of the optical intensity of the carrier channel **500** versus time. The carrier channel **500** has a wavelength λ_{cw}.

[0040] Changes in the voltage level of the voltage pattern **600** shifts the zero-order transmission spectrum of the periodic array **114** (FIG. **5**A) periodically from, for example, the zero-order transmission spectrum **502** (FIG. **5**B) to the zero-order transmission spectrum **503** (FIG. **5**B) by periodically varying the refractive index of the semiconductor structure

102 (FIG. **5**A) adjacent to the periodic array **114**. When the voltage applied by the voltage source **118** corresponds to the voltages **602-604** (which may be a zero voltage), a relatively high transmission **614-616** through the periodic array **114** may occur. When the voltage applied by the voltage source **118** corresponds to the voltages **605-606**, the zero-order transmission spectrum **502** shifts to the zero-order transmission spectrum **503**. As best shown in FIG. **5**B, transmission of the carrier channel **500** with a wavelength λ_{cw} through the periodic array **114** is relatively low or substantially zero in the zero-order transmission spectrum **503**. Accordingly, a relatively low transmission **617-618** of the carrier channel **500** occurs through the periodic array **114** when the voltage corresponds to the voltages **605-606**.

[0041] Applying a periodic voltage pattern **600** to the semiconductor structure **102** also modulates the optical intensity of the carrier channel **500**. By modulating the optical intensity of the carrier channel **500**, an amplitude modulated channel $\bar{\lambda}$ is generated. FIG. **6**D shows the amplitude modulated channel $\bar{\lambda}$ generated by applying the periodic voltage pattern **600**. As shown in FIG. **6**D, periods **640-642** have a relatively large optical intensity, which correspond to the binary number "1" and low voltage levels **602-604**, respectively, shown in FIG. **6**A. The high optical intensity in the periods **640-642** are achieved during the time interval when refractive index of the semiconductor structure **102** is tuned so that the periodic array **114** exhibits the zero-order transmission spectrum **502** (FIG. **5**B), as described above with reference to FIG. **6**C. During the periods **643** and **644**, the optical intensity has a relatively small magnitude, which correspond to the binary number "0" and high voltage levels **605** and **606**, respectively. The low optical intensity periods **643** and **644** are achieved during time intervals when refractive index of the semiconductor structure **102** is tuned so that the periodic array **114** exhibits the zero-order transmission spectrum **503** (FIG. **5**B) in which the transmission at the wavelength λ_{cw} of the carrier channel **500** is substantially less than the transmission at the low voltage levels **602-604** and may be about zero.

[0042] It is noted that in other embodiments of the present invention, the intrinsic region **110** of the photonic device **100** shown in FIGS. **1** and **2** may be omitted. In such an embodiment, the semiconductor structure **102** is a p-n semiconductor structure having a p-n junction as opposed to a p-i-n semiconductor structure. The refractive index of the p-n semiconductor structure and, consequently, the zero-order transmission spectrum of the periodic array **114** may be controlled in a similar manner to the semiconductor structure **102** by injecting electrons into the p-semiconductor region **108**.

[0043] FIGS. **7** and **8** show a photonic device **700** according to another embodiment of the present invention. The photonic device **700** includes a semiconductor structure **702** formed on a substrate **104**. The semiconductor structure **702** includes a quantum-well structure **704** that functions as a gain region to provide optical gain at a selected wavelength. The quantum-well structure **704** is sandwiched between a p-semiconductor region **708** and an n-semiconductor region **706**. The photonic device **700** further includes a thin doped region **712** including a periodic array **714** having subwavelength-dimensioned recesses **716** extending into the p-semiconductor region **708**. The periodic array **714** functions similarly to the periodic array **114** described above with respect to the photonic device **100** shown in FIG. **1**. The photonic device **700** also includes a voltage source **718** operable to selectively apply a voltage across the semiconductor structure **702**. Thus, the voltage source **718** enables selectively varying the refractive index of the semiconductor structure **702** adjacent to the periodic array **714**. The voltage source **718** also enables promoting electrons into a selected quantized energy state within the quantum-well structure **704**.

[0044] The quantum-well structure **704** further includes a relatively thin semiconductor layer **706** having a first energy band gap sandwiched between semiconductor layers **707** and **709**. Each of the semiconductor layers **707** and **709** has a second energy band gap that is greater than that of the first energy band gap of the semiconductor layer **706**. By properly selecting the semiconductor materials used to form the quantum-well structure **704** and the thickness of the semiconductor layer **706**, along with application of an appropriate voltage with the voltage source **718**, electrons tunnel into a selected energy state within the semiconductor layer **706**. It should be noted that in other embodiments of the present invention, the quantum-well structure **704** may include two or more quantum wells.

[0045] The quantum-well structure **704** may be formed from a number of different materials. For example, the thin semiconductor layer **706** may be formed from gallium arsenide and the semiconductor layers **707** and **709** may each be formed from aluminum gallium arsenide. In such an embodiment, the n-semiconductor region **706** and the p-semiconductor region **708** may be appropriately doped gallium arsenide regions and the substrate **104** may be a gallium arsenide substrate. In another embodiment of the present invention, the thin semiconductor layer **706** may be formed from indium phosphide and the semiconductor layers **707** and **709** may each be formed from aluminum indium phosphide. In yet another embodiment of the present invention, the thin semiconductor layer **706** may be formed from silicon and the semiconductor layers **707** and **709** may each be formed from a silicon-germanium alloy. Forming the quantum-well structure **704** from silicon-based materials facilitates integrating the photonic device **700** with silicon-based integrated circuits.

[0046] As shown in FIG. **8**, the quantum-well structure **704** may be used to increase the intensity of a carrier channel **800** having a wavelength λ_{cw}. During operation, the carrier channel **800** irradiates back surface **802** of the substrate **104** and is at least partially transmitted through the substrate **104** and the n-semiconductor region **712**. During operation, the voltage source **718** applies a selected voltage to promote tunneling of electrons from one of the semiconductor layers **707** and **709** into a discrete energy level E_h of the semiconductor layer **706**. This tunneling effect creates a population inversion of electrons in the semiconductor layer **706** at the energy level E_h.

[0047] Still referring to FIG. **8**, the transmitted carrier channel **800** is at least partially transmitted through the semiconductor layer **709** and into the semiconductor layer **706**. The carrier channel **800** stimulates emission of electromagnetic radiation **804** from the tunneled electrons in the semiconductor layer **706** at the wavelength λ_{cw}. By proper selection of materials used for the quantum-well structure **704** and the applied voltage, the electronic structure of the semiconductor layer **706** of the quantum-well structure **704** exhibits a discrete energy level E_h that electrons from one of the semiconductor layers **707** and **709** can tunnel into. The transmitted carrier channel **800** promotes transition of the tunneled electrons from the energy level E_h to a lower energy level E_l in the semiconductor layer **706** because the transmitted carrier channel **800** has a energy equal to the transition energy

between the E_h and the E_h energy levels (i.e., E_h-E_l). Thus, the wavelength of the transition between the E_h and the E_h energy levels is λ_{cw}. As a result of the transition of the tunneled electrons to the lower energy level E_l, emission of stimulated electromagnetic radiation having the same wavelength λ_{cw}, phase, polarization, and wavevector as the transmitted carrier channel **800** occurs. In turn, the stimulated emission, promotes further transitions of the tunneled electrons from the energy level E_h to the lower energy level E_l in the semiconductor layer **706**. Due the cascading emission of electromagnetic radiation in the semiconductor layer **706** at the wavelength λ_{cw}, the electromagnetic radiation **804** has a substantially greater intensity than the carrier channel **800**. The stimulated electromagnetic radiation **804** is at least partially transmitted through the semiconductor layer **707** of the quantum-well structure **704**, the p-semiconductor region **708**, and the subwavelength-dimensioned recesses **716** of the periodic array **714**.

[0048] The selected voltage that is applied to the semiconductor structure **702** to generate the population inversion in the quantum-well structure **704** also alters the refractive index of the semiconductor structure **702** adjacent to the periodic array **714**. At the selected voltage applied by the voltage source **718**, the combination of the periodic array **114** configuration and the refractive index of the semiconductor structure **702** adjacent to the periodic array **714** is selected so that the electromagnetic radiation **804** is transmitted through the periodic array **714**. In one embodiment of the present invention, at the selected voltage applied by the voltage source **718**, the combination of the periodic array **114** configuration and the refractive index of the semiconductor structure **702** adjacent to the periodic array **714** is selected so that the zero-order transmission spectrum through the periodic array **714** is similar to the zero-order transmission spectrum **502** shown in FIG. **5**B, with the dominant wavelength of the zero-order transmission spectrum at the wavelength λ_{cw} of the electromagnetic radiation **804**. In another embodiment of the present invention, the quantum-well structure **704** is designed so that gain at the wavelength λ_{cw} is maximized at the selected applied voltage in addition to the wavelength λ_{cw} of the electromagnetic radiation **804** being the dominant wavelength of the zero-order transmission spectrum through the periodic array **714**.

[0049] As with the photonic device **100**, the photonic device **700** may be operated as an electro-optic modulator by applying a periodic voltage using the voltage source **718** produce an amplitude modulated channel similar to the amplitude modulated channel $\bar{\lambda}$ shown in FIG. **6**D. For example, the voltage pattern **600** may be applied to the semiconductor structure **702**, and the voltage levels **605-606** may be selected to generate the population inversion in the quantum-well structure **704** and tune the refractive index of the semiconductor structure **702** adjacent to the periodic array **714** to allow transmission at the wavelength λ_{cw}, with the wavelength λ_{cw} being the dominant wavelength of the zero-order transmission spectrum. Application of the voltage levels **602-604** may be such that no population inversion is created in the quantum-well structure **704** and, additionally, the refractive index of the semiconductor structure **702** adjacent to the periodic array **714** is such that substantially no transmission of the carrier channel **800** at the wavelength the wavelength λ_{cw} is transmitted through the periodic array **714**.

[0050] In a further embodiment of the present invention, a number of quantum dots may be used instead of a quantum-well structure for increasing the intensity of a carrier channel transmitted through the photonic device **700** at the wavelength λ_{cw}. For example, FIG. **9** shows a photonic device **900** according to yet another embodiment of the present invention in which quantum dots function as the gain medium. In the interest of brevity, common components between the photonic device **900** and the photonic device **700** shown in FIG. **7** use the reference numerals. The quantum-well structure **704** of the photonic device **700** is replaced with a quantum-dot structure **902**. The quantum-dot structure **902** includes a number of quantum dots **904** that may be deposited or grown on the n-semiconductor region **712**. Each of the quantum dots **904** is made from a semiconductor material and includes a number of quantized electronic states that electrons can be excited into by application of a stimulus. For example, each of the quantum dots **904** may be made from III-V semiconductor compounds (e.g., InP, GaAs, gallium nitride ("GaN"), etc.) grown by molecular beam epitaxy on the substrate **104**. The quantum dots **904** are embedded in a matrix **906** made from a semiconductor material, such as doped or undoped InP, indium gallium phosphide ("InGaP"), indium gallium arsenide phosphide ("InGaAsP"), GaAs, or GaN.

[0051] The quantum-dot structure **902** serves the same function as the quantum-well structure **704** of the photonic device **700** shown in FIG. **7**. Namely, application of an appropriate voltage by the voltage source **718** excites electrons in the quantum dots **904** to an excited electronic state. Similarly to the operation of the photonic device **700**, a carrier channel having a wavelength λ_{cw} stimulates emission of electromagnetic radiation at the same wavelength λ_{cw} from the quantum dots **904** that is transmitted through the periodic array **714**.

[0052] Photonic devices according to certain embodiments of the present invention include at least two periodic arrays in series to provide improved filtering. FIG. **10** shows a photonic device **1000** according to yet another embodiment of the present invention in which the photonic device **1000** includes two periodic arrays in series to provide improved filtering. The photonic device **1000** includes a substrate **1004** having a thin doped region **1006** formed therein. For example, the thin doped region **1006** may be a delta-doped region, as previously described. The thin doped region **1006** includes a first periodic array **1008** having a number of subwavelength-dimensioned recesses **1010** that extend into the substrate **1004**. The photonic device **1012** also includes a semiconductor structure **1011** formed on the doped region **1006**. The semiconductor structure **1011** includes an n-semiconductor region **1012**, a p-semiconductor region **1014**, and an intrinsic region **1016** located therebetween. As previously described with respect to the photonic device **100**, a thin doped region **1018** is formed on or within the p-semiconductor region **1014**. For example, the thin doped region **1018** may be a delta-doped region. The thin doped region **1018** includes a second periodic array **1020** having recesses **1022** that extend into the p-semiconductor region **1014**. The first periodic array **1008** has a zero-order transmission spectrum that is broader than a zero-order transmission spectrum of the second periodic array **1020**. The photonic device **1000** may also include a voltage source **1024** for controlling the refractive index of the semiconductor structure **1011** to tune the zero-order transmission spectrum through the first and second periodic arrays **1008** and **1020**.

[0053] As shown in FIG. **11**, in operation, electromagnetic radiation having a wide range of wavelengths $\lambda_1, \lambda_2, \lambda_3 \ldots \lambda_n$ may be directed at a back surface **1102** of the substrate **1004**. The first periodic array **1008** is configured so that only a

narrow range of wavelengths is transmitted therethrough. The first periodic array **1008** is configured to allow electromagnetic radiation **1104** to be transmitted through the first periodic array **1008**, with a zero-order transmission spectrum **1106** having a selected dominant wavelength λ_1. The zero-order transmission spectrum **1106** has a width **1108** at half maximum. The electromagnetic radiation **1104** is at least partially transmitted through the semiconductor structure **1011** and only a portion of the electromagnetic radiation **1104** passes through the second periodic array **1020**. As illustrated, the second periodic array **1020** allows electromagnetic radiation **1110** to be transmitted therethrough with a zero-order transmission spectrum **1112** having the same dominant wavelength λ_1 as the zero-order transmission spectrum **1106**. However, the zero-order transmission spectrum **1112** has a width **114** at half maximum that is less than the width **1108**. Accordingly, the combination of the first and second periodic arrays **1008** and **1020** provide for a narrower zero-order transmission spectrum centered at the dominant wavelength λ_1. Additionally, as with the previously described embodiments, application of a selected voltage with the voltage source **1024** may be used to selectively alter the zero-order transmission spectrums **1106** and **1112** through each of the first and second periodic arrays **10080** and **1020**.

[0054] The disclosed embodiments of photonic devices may be used in a number of different applications. FIG. **12** shows an optical fiber system **1200** according to one embodiment of the present invention. The optical fiber system **1200** includes an optical fiber **1202** configured for transmitting a carrier channel having a wavelength λ_{cw}. The optical fiber system **1200** further includes an electro-optic modulator **1204** configured as any of the disclosed embodiments of photonic devices operable as an electro-optic modulator. During operation, the carrier channel λ_{cw} is transmitted through the optical fiber **1202** to the electro-optic modulator, which modulates the carrier channel λ_{cw} to produce an amplitude modulated channel $\overline{\lambda}$, as previously described.

[0055] FIG. **13** shows an optical fiber system **1300** according to another embodiment of the present invention. The optical fiber system **1300** includes an optical fiber **1302** configured to transmit multiple encoded channels or carrier channels $\lambda_1, \lambda_2, \lambda_3 \ldots \lambda_n$. The optical fiber system **1300** further includes a tunable filter **1304** configured as any of the disclosed embodiments of photonic devices operable as a tunable filter. In operation, the multiple encoded channels or carrier channels $\lambda_1, \lambda_2, \lambda_3 \ldots \lambda_n$ are transmitted through the optical fiber **1302** to the tunable filter **1304**. The tunable filter **1304** selectively transmits only one of the encoded channels or carrier channels $\lambda_1, \lambda_2, \lambda_3 \ldots \lambda_n$ at a time.

[0056] FIG. **14** shows a PIC **1400** according to another embodiment of the present invention. The PIC **1400** may employ any of the disclosed embodiments of photonic devices operable as an electro-optic modulator. The PIC **1400** includes a substrate **1402** that includes functional circuitry **1404** and **1406**. For example, the substrate **1402** may be a silicon substrate and the functional circuitry **1404** and **1406** may be CMOS circuitry. The functional circuitry **1404** may be configured to perform processing functions and the functional circuitry **1406** may be configured to perform memory functions. An electrical-to-optical converter ("EOC") **1408**, such as a laser diode, outputs a carrier channel λ_{cw} to an electro-optic modulator **1412** via a waveguide **1410** responsive to electrical signals from the functional circuitry **1404**. The electro-optic modulator **1412** may be configured as any of the disclosed photonic devices operable as an electro-optic modulator. The electro-optic modulator modulates the carrier channel λ_{cw} to produce an amplitude modulated channel $\overline{\lambda}$, as previously described. The amplitude modulate channel $\overline{\lambda}$, is transmitted to an optical-to-electrical converter ("OEC") **1416**, such as a PIN photodiode, via a waveguide **1414**. The OEC **1416** is operable to convert the amplitude modulate channel $\overline{\lambda}$ to an encoded electrical signal that is further transmitted to the functional circuitry **1406**.

[0057] The photonic devices **100**, **700**, **900**, and **1000** described above only transmit a single zero-order transmission spectrum at a time. However, simultaneous transmission of different zero-order transmission spectrums through a photonic device may be useful in certain applications, such as flat panel displays. FIG. **15** shows a photonic device **1500** according to yet another embodiment of the present invention. The photonic device **1500** includes a number of different periodic arrays formed in a doped region, with each of the periodic arrays configured to transmit electromagnetic radiation at a different dominant wavelength. The photonic device **1500** includes a substrate **1502** on which a semiconductor structure **1501** is formed. The semiconductor structure **1501** includes a p-semiconductor region **1503**, an n-semiconductor region **1504**, and an intrinsic region **1506** therebetween. A thin doped region **1508** may be formed on or within the p-semiconductor region **1504**, as previously described. The doped region **1508** includes a first periodic array **1510** with subwavelength-dimensioned recesses **1512**, a second periodic array **1514** with subwavelength-dimensioned recesses **1516**, and a third periodic array **1518** with subwavelength-dimensioned recesses **1520**. Each of the periodic arrays **1510**, **1514**, and **1518** is configured to transmit electromagnetic radiation having a zero-order transmission spectrum with a different dominant wavelength. For example, the geometry and/or recess spacing may be different in each of the periodic arrays **1510**, **1514**, and **1518**.

[0058] In operation, electromagnetic radiation including wavelengths λ_1, λ_2, and λ_3 irradiates back surface **1521** of the substrate **1502**. The first periodic array **1510** allows transmission of electromagnetic radiation having a zero-order transmission spectrum with a dominant wavelength λ_1, the second periodic array **1514** allows transmission of electromagnetic radiation having a zero-order transmission spectrum with a dominant wavelength λ_2, and the third periodic array **1518** allows transmission of electromagnetic radiation having a zero-order transmission spectrum with a dominant wavelength λ_3. Of course, in other embodiments of the present invention, more or less than three periodic arrays may be formed in the doped region **1508**.

[0059] FIGS. **16** and **17** show a photonic device **1600** according to another embodiment of the present invention. The photonic device **1600** is configured so that different array regions of a periodic array with subwavelength recesses transmit different zero-order transmission spectrums therethrough. The photonic device **1600** includes a substrate **1602** on which a semiconductor structure **1601** is formed. The semiconductor structure **1601** includes an n-semiconductor region **1603**, a p-semiconductor region **1604**, and an intrinsic region **1606** therebetween. A thin doped region **1608** may be formed on or within the p-semiconductor region **1604**, as previously described. The doped region **1608** includes a periodic array **1610** with subwavelength-dimensioned recesses **1612**.

[0060] As illustrated in FIG. **17**, the dopant concentration in the doped region **1608** varies laterally across the doped region **1608**. Such a dopant profile may be formed by selectively depositing dopant on the p-semiconductor region **1604** followed by annealing to diffuse the dopant into the p-semiconductor region **1604**. For example, the dopant may be selectively deposited on the p-semiconductor region **1604** by appropriately masking and depositing the dopant or another suitable technique. For example, the doped region **1608** may include array regions **1614**, **1616**, and **1618** that have dopant concentration C_1, C_2, and C_3, respectively. By varying the dopant concentration, the bulk plasma frequency in each of the array regions **1614**, **1616**, and **1618** may vary because the free-electron concentration varies in each array region **1614**, **1616**, and **1618**. Consequently, each array region **1614**, **1616**, and **1618** is configured to transmit electromagnetic radiation having a zero-order transmission spectrum with different dominant wavelengths.

[0061] In operation, electromagnetic radiation including wavelengths λ_1, λ_2, and λ_3 irradiates back surface **1621** of the substrate **1602**. The array region **1614** of the periodic array **1610** allows transmission of electromagnetic radiation having a zero-order transmission spectrum with a dominant wavelength λ_1, the array region **1616** of the periodic array **1610** allows transmission of electromagnetic radiation having a zero-order transmission spectrum with a dominant wavelength λ_2, and the array region **1618** of the periodic array **1610** allows transmission of electromagnetic radiation having a zero-order transmission spectrum with a dominant wavelength λ_3. Of course, in other embodiments of the present invention, more than three periodic arrays may be formed in the doped region **1508**. Moreover, the dopant profile shown in FIG. **17** merely represents one example of a suitable dopant profile. In another embodiment of the present invention, the dopant profile may be a continuously varying linear dopant profile or another suitable dopant profile.

[0062] Although the present invention has been described in terms of particular embodiments, it is not intended that the present invention be limited to these embodiments. Modifications within the spirit of the present invention will be apparent to those skilled in the art. For example, in other embodiments of the present invention, the intrinsic region of the various disclosed photonic devices may be omitted. In such embodiments, a p-n junction is form instead of a p-i-n semiconductor structure that also enables controlling the refractive index of the material adjacent to the periodic array. Also, as discussed above, the illustrated subwavelength-dimensioned recesses are merely one particular recess configuration. Periodic arrays with different recess shapes may also be used for tuning a zero-order transmission spectrum of the periodic array. In yet another embodiment of the present invention, dye molecules embedded in an optical medium, such as a polymer or glass, may be used instead of quantum dots in the embodiment shown in FIG. **9**.

[0063] The foregoing description, for purposes of explanation, used specific nomenclature to provide a thorough understanding of the present invention. However, it will be apparent to one skilled in the art that the specific details are not required in order to practice the present invention. The foregoing descriptions of specific embodiments of the present invention are presented for purposes of illustration and description. They are not intended to be exhaustive of or to limit the present invention to the precise forms disclosed. Many modifications and variations are possible in view of the above teachings. The embodiments are shown and described in order to best explain the principles of the present invention and its practical applications, to thereby enable others skilled in the art to best utilize the present invention and various embodiments with various modifications as are suited to the particular use contemplated. It is intended that the scope of the present invention be defined by the claims and their equivalents:

1. A photonic device, comprising:
a semiconductor structure including a p-region and an n-region; and
a doped region formed on or within the semiconductor structure, the doped region including at least one generally periodic array of recesses, the at least one generally periodic array configured to transmit electromagnetic radiation at a selected dominant wavelength, the selected dominant wavelength tunable by varying the refractive index of the semiconductor structure.

2. The photonic device of claim **1** wherein the semiconductor structure comprises an intrinsic region located between the n-region and the p-region.

3. The photonic device of claim **1** wherein the semiconductor structure comprises a gain region located between the n-region and the p-region, the gain region operable to provide gain at the selected dominant wavelength that is transmitted through the at least one generally periodic array.

4. The photonic device of claim **3** wherein the gain region comprises a quantum-well structure.

5. The photonic device of claim **3** wherein the gain region comprises one of:
a number of quantum dots; and
dye molecules.

6. The photonic device of claim **1**, further comprising:
a voltage source configured to apply a voltage across the semiconductor structure and the doped region to selectively vary a refractive index of the semiconductor structure and a value of the selected dominant wavelength.

7. The photonic device of claim **1** wherein the doped region has a delta-doped profile.

8. The photonic device of claim **1** wherein each of the recesses of the at least one array extends to at least a depth of the doped region.

9. The photonic device of claim **1** wherein the doped region exhibits a dopant concentration that varies laterally across the doped region, the selected dominant wavelength that can be transmitted through the at least generally periodic array varying depending upon the dopant concentration.

10. The photonic device of claim **1** wherein the at least one generally periodic array comprises a number of generally periodic arrays, each of the number of generally periodic arrays configured to transmit electromagnetic radiation at different selected dominant wavelengths.

11. The photonic device of claim **1**, further comprising:
a substrate including an additional doped region formed on or within the substrate, the additional doped region including an additional generally periodic array of recesses, the additional doped region positioned adjacent to a side of the semiconductor structure opposite the doped region, the additional generally periodic array configured to transmit electromagnetic radiation at the selected dominant wavelength.

12. An optical fiber system comprising the photonic device of claim **1**.

13. A photonic integrated circuit comprising the photonic device of claim **1**.

14. A method of encoding a carrier channel, comprising:

irradiating, with the carrier channel, at least one generally periodic array of recesses formed in a doped region positioned adjacent to a semiconductor structure; and

modulating an intensity of the carrier channel passing through the at least one generally periodic array of recesses by modulating the refractive index of the semiconductor structure.

15. The method of claim **14** wherein modulating the refractive index of the semiconductor structure comprises modulating a voltage applied across the semiconductor structure.

16. The method of claim **14** wherein the semiconductor structure comprises a p-region, an n-region, and an intermediate region therebetween, the doped region formed within one of the p-region and the n-region.

17. The method of claim **14** wherein:

the semiconductor structure comprises a gain medium; and

the carrier channel that irradiates the at least one generally periodic array is generated, in part, by stimulating emission of electromagnetic radiation from the gain medium.

18. The method of claim **17**:

further comprising modulating gain provided by the gain medium;

wherein the act of modulating an intensity of the carrier channel passing through the at least one generally periodic array of recesses and the act of modulating gain provided by the gain medium is performed so that gain is maximized when the intensity transmitted through the at least one generally periodic array of recesses is maximized.

19. A method of filtering electromagnetic radiation having a range of wavelengths, comprising:

irradiating, with the electromagnetic radiation, at least one generally periodic array of recesses formed in a doped region positioned adjacent to a semiconductor structure; and

transmitting only a portion of the electromagnetic radiation through the at least one generally periodic array, wherein the transmitted electromagnetic radiation exhibits a transmission spectrum having a selected dominant wavelength.

20. The method of claim **18**, further comprising controlling the selected dominant wavelength transmitted through the at least one generally periodic array by selectively varying the refractive index of the semiconductor structure.

* * * * *