WAVELENGTH DIVISION MULTIPLEXING:

Ultra High Speed Fiber Optics

Joseph R. Kiniry

The global telecommunications and networking backbone contains millions of kilometers of fiber-optic cabling, but we use only one ten-thousandth of the potential bandwidth of those cables. One reason is that a single converter from electrical to optical signals can only make use of a small amount of optical spectrum, limiting the achievable bandwidth to about 2.5 gigabits per second.

Wavelength Division Multiplexing is a new technology that begins to help resolve this disparity. WDM takes advantage of the fact that multiple colors (frequencies) of infrared light can be transmitted simultaneously down a single optical fiber, and each of those frequency channels can carry independent information—just as each FM radio channel carries its own station. With the use of WDM, the capacity of a single strand of fiber, 250 microns in diameter, can carry between 10 and 80 Gbps; a typical cable of 18 millimeters in diameter contains up to 200 fibers.

WDM systems get around the speed limitation of electronics by using multiple wavelengths of light simultaneously.

FIBER-OPTIC NETWORKS (A QUICK INTRODUCTION)

Sending light signals over glass or plastic cables has been at the core of the phone network and the Internet since the mid-eighties. The advantages of using fiber include low signal loss, high bandwidth, high reliability, immunity to electrical interference, and flexibility. For example, even a low-bandwidth copper link needs repeaters to amplify the signal every 5 kilometers, while repeaters on a fiber-optic cable can be spaced up to 30 km. Transoceanic transmission has become possible through erbium-doped fiber amplifiers that directly regenerate the optical signal without requiring the conversion from light into electric signals and back.

The bandwidth on twisted-pair cables is limited to about 150 Mbps over distances of a few hundred feet. While coaxial cable can carry 1 or 2 Gbps for a kilometer, it is far heavier and bulkier than fiber. The total bandwidth of one of the three typical "transmission windows," the regions of spectrum with good propagation characteristics, is about 25 to 30,000 GHz, as opposed to around 1 GHz for coaxial cable. Current fiber backbone links range in size from OC-3 (155 Mbps) to OC-48 (2.4 Gbps) and even, recently, to OC-192 (10 Gbps). But a single cable is theoretically capable of carrying four orders of magnitude more information than it does today.

Pulses of light on a fiber are channeled into modes, which are the physical paths light can take while traveling down the wire, reflecting off the cladding that wraps the core. The cladding is made of one or more layers of material (glass or plastic) that have a lower refractive index than the core.

Contrary to intuition, more modes mean less bandwidth. As light travels down a fiber, it spreads out over time because of multimode distortion. Multimode distortion occurs because different frequencies of light travel through a uniform medium at different velocities and some light rays bounce more often than others.

Typically, short-distance fiber connections in buildings are carried in multimode fibers, often made of plastic, that can be driven by cheap light-emitting diodes, while long-distance connections use the more expensive single-mode glass fiber, driven by lasers. Fiber has been primarily used in campus and wide-area installations, since the per-interface costs for fiber are still significantly higher than for copper (plus you can directly connect your telephone to a twisted pair, something difficult to do with fiber).

TIME DIVISION MULTIPLEXING

In the local area, ATM and FDDI are two popular network technologies that commonly use fiber, and they use light pulses directly to code their bits. Only a single FDDI network (100 Mbps), for example, can reside on a single fiber. Most telecommunications networks, including the phone network, split the "raw" fiber bandwidth into channels, using a technique known as Time-

Samsung Exhibit 1023, Page 1 of 3

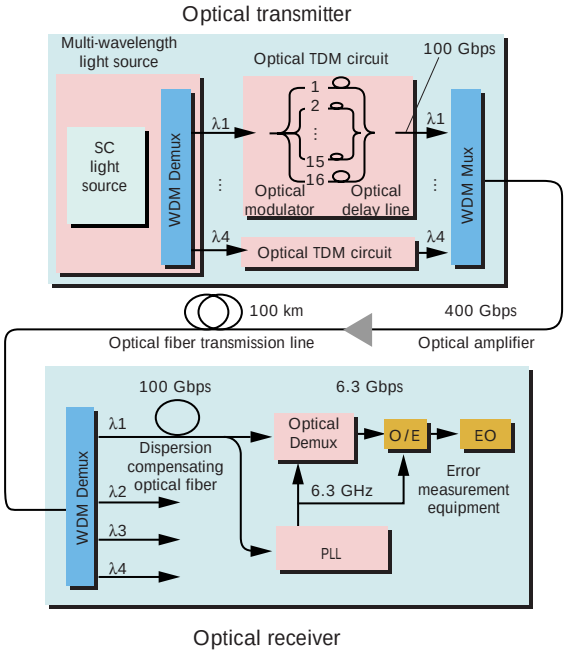

Figure 1. Experimental setup for an NTT experiment that demonstrated 400-Gbps fiber-optic transmission.

Division Multiplexing. TDM simply divides passing through the fiber into periodic units of time, with each channel getting a slice of each such period. The current standard for TDM is known as Sonet (Synchronous Optical Network) in the US and SDH (Synchronous Digital Hierarchy) elsewhere. ATM in the wide area (and increasingly locally as well) rides in one or more Sonet/SDH channels.

Top TDM systems can reach a few Gbps, which is more than enough for most applications. So what's wrong with TDM? The problem is twofold. First, TDM does not take advantage of the fact that light can be spatially multiplexed, and that's where WDM comes in. And second, because TDM takes processing on the sending and receiving sides of the channel to choose which packet is next, researchers think that getting TDM to fully utilize an OC-192 channel may be unrealistic.

WAVELENGTH DIVISION MULTIPLEXING

WDM systems get around the speed limitation of electronics by using multiple wavelengths of light simultaneously. These multi-wavelength "channels" are usually spaced about 50 to 100 GHz apart. Each channel can be used to transmit data at the few Gbps afforded by today's electronic speeds, realizing networks with extremely large capacities.

WDM and the Internet

Research on WDM and other optical multiplexing technologies has been under way for about a decade, but the technology did not take off in the marketplace until 1996, when usage of the Internet and WWW exploded.

Vint Cerf recently stated that annual rates of growth for IP traffic have been reported ranging from 100 to 1,000 percent. Given this rate of growth, the maturation of dense WDM technology has understandably created a feeding frenzy on Wall Street and Telco Row.

Long-distance providers see WDM as their saving grace, a technology that will allow them to use their existing infrastructure, since WDM works on most existing fiber, to realize a huge bandwidth boost. But they realize that, even with WDM deployment the world over, the problem is not yet solved.

Challenges in WDM

A technology handoff still needs to take place. While TDM is hitting the limits of network element and switching technology, WDM is still ramping up. Major obstacles in deploying hybrid networks during this transition are management and performance impedance mismatches between networks. Additionally, standards are still being worked out for interoperability between different network vendors of WDM technologies. The International Telecommunications Union study group 15/WP4 Q.25 is working to determine a standard set of wavelengths to enable WDM equipment interoperability.

In theory, a single fiber-optic strand could carry all of the telephone calls made in the US on an average day. However, the existing network infrastructure, the network elements themselves such as switches and routers, have inherent electronic limitations. A router's processor has a lot of work to do for each packet. It must read the destination address, decide where the packet should be sent, and send it out on the appropriate link.

The pursuit of ultra-high network speeds by the transmission and switching subsystems has become the race of the century. While demand for bandwidth is skyrocketing, bandwidth capabilities of all technologies but fiber are not.

For example, imagine using IP to send 50 Gbps of information (approximately 4.5 million packets per second at the typical packet size of 1,500 bytes) over an optical link to a system that has to convert the photons into bits, and then decide how to handle them. This means that a router has about 225 nanoseconds to decide where your packet should go.

NTT'S MULTI-GIGABIT EXPERIMENTS

These numbers are very much a lower bound. In 1996 researchers at Nippon Telegraph and Telephone demonstrated a system capable of bandwidth greater than 2.2 terabits per second.

Figure 1 shows the experimental setup for an earlier (Sept. 1995) NTT experiment that demonstrated 400 Gbps transmission. A supercoherent light source (a proprietary laser light source) generates a train of sub-picosecond light pulses that have a continuous optical spectrum ranging over 200 nm.

Samsung Exhibit 1023, Page 2 of 3

The WDM demultiplexer selects four pulse trains of different wavelengths from the pulses. The optical TDM circuit multiplexes the input 6.3-Gbps pulse train by 16 to generate a 100-Gbps signal. The four 100-Gbps signals are then multiplexed by a WDM multiplexer to form a 400-Gbps optical signal. The signals are then collectively amplified by a broadband erbium-doped fiber amplifier and transmitted over a 100-km optical fiber transmission line.

On the receiving side, the optical receiver demultiplexes the 400-Gbps signals into four wavelength channels of 100-Gbps signals with a WDM demultiplexer. The 100-Gbps signals on each wavelength are divided in two: one goes to a prescaled phase-locked loop (PLL) timing extraction circuit to extract a 6.3-GHz clock; the other goes to an all-optical TDM demultiplexer to demultiplex the 100-Gbps signals into 16 channels of 6.3-Gbps signals.

The demultiplexed 6.3-Gbps optical signals are then converted to the electrical signals at the optical/electrical converter and their bit-error-rate characteristics evaluated.

TBPS SWITCHES

With transmission speeds reaching into the multiterabit range, the bottleneck rapidly moves to the network element at the ends of the channel. Luckily, researchers are demonstrating small packet switches with aggregate bandwidth of hundreds of Gbps.

Early last year, researchers at **MIT's Lincoln Laboratory**, in collaboration with Lucent Laboratories and AT&T, demonstrated the first Tbps network switch. The switch, a silicon dioxide waveguide structure, consists of eight input and output ports. Each input port is connected to a 14-channel tunable laser (a laser that can output light at specific frequencies) and each channel is modulated at 10 Gbps, thus resulting in a 140-Gbps-per-input port. The total input to the switch is therefore 1.12 Tbps. In testing, each color channel was successfully routed to the appropriate output port with minimum degradation.

The **Tiny Tera**, a Coke-can sized packet switch core out of Stanford, uses off-the-shelf technology and innovative scheduling algorithms for both unicast and multicast traffic to build a switch that can handle 320 Gbps. Several such switches can be combined in parallel in a single box capable of switching more than 1 Tbps of data.

ENHANCED OPTICAL COMPONENTS

Another way to tackle the problems of ultra-high bandwidth communication is to enhance the optical components in the system. One such technology comes from a co-venture, called **LightChip**, between **LightPath Technologies** and the **Invention Machine Corporation**, a firm specializing in software tools for engineers and scientists. Using LightPath's line of ultra high quality gradient-index lenses, LightChip claims that its WDM devices can concentrate, collect, and separate light extremely accurately.

LightChip further states its systems can handle up to 32 channels now, with up to 100 possible in the near future. ■

URLs for On the Wire

Invention Machine Corp. • www.invention-machine.com/
LightChip • www.lightchip.com/
LightPath Technologies • www.lightpath.com/
MIT's Lincoln Laboratory • www.ll.mit.edu/
NTT R&D Report • www.nttiinfo.ntt.jp/RD/1995rev/telecom/tel13.html
Tiny Tera • klamath.stanford.edu/tiny-tera/

you@computer.org
FREE!

All IEEE Computer Society members can obtain a free, portable e-mail ***alias@computer.org.*** Select your own user name and initiate your account. The address you choose is yours for as long as you are a member. If you change jobs or Internet service providers, just update your information with us, and the society automatically forwards all your mail.

Sign up today at
http://computer.org

IEEE COMPUTER SOCIETY

Centralize your Intelligence with CIA Server™
Browser / Server AI Technology based on Java, COM, Active Agent X, Eclipse and Rete++
Add Brains to Browsers with Cafe' Rete'™
ActiveX and Plug-In for Netscape Navigator and Microsoft IE using COM, Java and Visual Basic
The Haley Enterprise
Leverage your intelligence, visit http://www.haley.com
INTELLIGENT AGENTS FOR THE WEB