UNITED STATES DISTRICT COURT
FOR THE EASTERN DISTRICT OF TEXAS
MARSHALL DIVISION

ADVANCED CODING TECHNOLOGIES LLC, **Plaintiff,** **v.** **GOOGLE LLC,** **Defendant.**	**CIVIL ACTION NO. 2:24-cv-00353-JRG**

DEFENDANT GOOGLE LLC'S AMENDED INVALIDITY AND SUBJECT MATTER ELIGIBILITY CONTENTIONS

TABLE OF CONTENTS

Page

I. INTRODUCTION 1

II. GENERAL STATEMENT AND RESERVATION OF RIGHTS 1

A. Asserted Claims 1
B. Claim Construction 2
C. Doctrine of Equivalents 4
D. Ongoing Discovery and Disclosures 5
E. Additional Reservation of Rights 5

III. INVALIDITY CONTENTIONS 10

A. U.S. Patent No. 8,090,025 12
1. Alleged Priority Date 12
2. General State of the Art at the Time of the Alleged Invention 14
3. Disclosure of Prior Art References (P.R. 3-3(a)) 15
a) Prior Art Patents, Patent Applications, And Publications 15
b) Prior Art Systems 23
4. Anticipation and Obviousness Under P.R. 3-3(b) and (c) 27
5. Obviousness Under P.R. 3-3(b) and (c) 30
a) Prior Art Rendering Asserted Claims Obvious 30
b) Teaching, Suggestion, or Motivation to Combine References 31
(i) "boundary condition" claim terms 40
(ii) "Poisson's Equation" claim terms 42
(iii) Coder Component claim terms 44
(iv) "selector" claim terms 45
c) Additional Combinations 46
d) Secondary Considerations 60
6. 35 U.S.C. § 112 Invalidity Under P.R. 3–3(d) 62
a) Indefiniteness under 35 U.S.C. § 112, Second Paragraph 63
b) Lack of Enablement and/or Lack of Written Description 73
B. U.S. Patent No. 9,986,303 85
1. Alleged Priority Date 85
2. General State of the Art at the Time of the Alleged Invention 86
3. Disclosure of Prior Art References (P.R. 3-3(a)) 88
a) Prior Art Patents, Patent Applications, And Publications 88
b) Prior Art Systems 97
4. Anticipation and Obviousness Under P.R. 3-3(b) and (c) 100
5. Obviousness Under P.R. 3-3(b) and (c) 103
a) Prior Art Rendering Asserted Claims Obvious 103

b) Teaching, Suggestion, or Motivation to Combine References 105
(i) "basic video image coding data" and "supplementary video image coding data" claim terms 113
(ii) "group of pictures" claim terms 115
(iii) "acquiring basic video image coding data before supplementary video image coding data" claim terms 116
c) Additional Combinations 118
d) Secondary Considerations 136
6. 35 U.S.C. § 112 Invalidity Under P.R. 3–3(d) 138
a) Indefiniteness under 35 U.S.C. § 112(b) 138
b) Lack of Enablement and/or Lack of Written Description 141
C. U.S. Patent No. 10,218,995 145
1. Alleged Priority Date 145
2. General State of the Art at the Time of the Alleged Invention 146
3. Disclosure of Prior Art References (P.R. 3-3(a)) 147
a) Prior Art Patents, Patent Applications, And Publications 147
b) Prior Art Systems 157
4. Anticipation and Obviousness Under P.R. 3-3(b) and (c) 160
5. Obviousness Under P.R. 3-3(b) and (c) 163
a) Prior Art Rendering Asserted Claims Obvious 163
b) Teaching, Suggestion, or Motivation to Combine References 165
(i) "super-resolution enlargement" claim terms 172
(ii) "resolution conversion" terms 174
(iii) hierarchical coding claim terms 175
c) Additional Combinations 177
d) Secondary Considerations 191
6. 35 U.S.C. § 112 Invalidity Under P.R. 3–3(d) 193
a) Indefiniteness under 35 U.S.C. § 112, Second Paragraph 194
b) Lack of Enablement and/or Lack of Written Description 203
D. U.S. Patent No. 9,042,448 214
1. Alleged Priority Date 214
2. General State of the Art at the Time of the Alleged Invention 215
3. Disclosure of Prior Art References (P.R. 3-3(a)) 216
a) Prior Art Patents, Patent Applications, And Publications 216
b) Prior Art Systems 228
4. Anticipation and Obviousness Under P.R. 3-3(b) and (c) 231
5. Obviousness Under P.R. 3-3(b) and (c) 234
a) Prior Art Rendering Asserted Claims Obvious 234
b) Teaching, Suggestion, or Motivation to Combine References 236
(i) "super-resolution enlargement" claim term 243
(ii) "resolution convertor" claim terms 246

(iii) hierarchical coding claim terms 247
c) Additional Combinations 248
d) Secondary Considerations 262
6. 35 U.S.C. § 112 Invalidity Under P.R. 3–3(d) 264
a) Indefiniteness under 35 U.S.C. § 112, Second Paragraph 264
b) Lack of Enablement and/or Lack of Written Description 267
E. U.S. Patent No. 8,230,101 272
1. Alleged Priority Date 272
2. General State of the Art at the Time of the Alleged Invention 273
3. Disclosure of Prior Art References (P.R. 3-3(a)) 275
a) Prior Art Patents, Patent Applications, And Publications 275
b) Prior Art Systems 277
4. Anticipation and Obviousness Under P.R. 3-3(b) and (c) 280
5. Obviousness Under P.R. 3-3(b) and (c) 283
a) Prior Art Rendering Asserted Claims Obvious 283
b) Teaching, Suggestion, or Motivation to Combine References 285
(i) "List Information Transmission" Limitations 293
(ii) "Digital Contents Data Transmission Processing" Limitations 296
(iii) "Transfer Control" Limitations 301
c) Additional Combinations 307
d) Secondary Considerations 325
6. 35 U.S.C. § 112 Invalidity Under P.R. 3–3(d) 327
a) Indefiniteness under 35 U.S.C. § 112, Second Paragraph 327
b) Indefiniteness under 35 U.S.C. § 112, Second and Sixth Paragraphs as Improper Means-Plus-Function/ Step-Plus-Function Limitations 330
c) Lack of Enablement and/or Lack of Written Description 336
F. U.S. Patent No. 7,804,891 339
1. Alleged Priority Date 339
2. General State of the Art at the Time of the Alleged Invention 341
3. Disclosure of Prior Art References (P.R. 3-3(a)) 344
a) Prior Art Patents, Patent Applications, And Publications 344
b) Prior Art Systems 349
4. Anticipation and Obviousness Under P.R. 3-3(b) and (c) 353
5. Obviousness Under P.R. 3-3(b) and (c) 356
a) Prior Art Rendering Asserted Claims Obvious 356
b) Prosecution History 358
c) Teaching, Suggestion, or Motivation to Combine References 360
(i) Symbol Judging Limitations 371
(ii) Data Changing Limitations 374
(iii) "wherein at least a portion of a bit string is distinguished as a protected portion" 380

(iv) "identifies the number of redundant bits having the predetermined value or the number of redundant bits missing the predetermined value" / "the number of redundant bits having the predetermined value or the number of redundant bits missing the predetermined value is identified" 381
d) Additional Combinations 383
e) Secondary Considerations 404
6. 35 U.S.C. § 112 Invalidity Under P.R. 3–3(d) 405
a) Indefiniteness under 35 U.S.C. § 112, Second Paragraph 406
b) Indefiniteness under 35 U.S.C. § 112, Second and Sixth Paragraphs as Improper Means-Plus-Function/ Step-Plus-Function Limitations 413
c) Lack of Enablement and/or Lack of Written Description 417

IV. SUBJECT MATTER ELIGIBILITY 422

A. The Asserted '025 Claims Are Ineligible Based on Representative Claim 6 426
B. The Asserted '303 Claims Are Ineligible Based On Representative Claim Claim 1 432
C. The Asserted '995 Claims Are Ineligible Based on Representative Claim 3 436
D. The Asserted '448 Claims Are Ineligible Based on Representative Claim 1 439
E. The Asserted '101 Claims Are Ineligible Based on Representative Claim 1 442
F. The Asserted '891 Claims Are Ineligible 445
1. The Asserted '891 Claims Are Ineligible Under *Alice* Based On Representative Claim 1 445
2. Claim 9 Is Ineligible As It is Not Directed To Any of the Statutory Category 448

V. ACCOMPANYING DOCUMENT PRODUCTION 448

I. INTRODUCTION

Pursuant to Local Patent Rules ("P.R.") 3-3 and 3-4, the Court's Standing Order Regarding Subject Matter Eligibility Contentions issued July 25, 2019 (the "Standing Order"), the Court's Third Amended Docket Control Order (D.I. 46), and the Court's Order Granting Leave to Amend (D.I. 56), Defendant Google LLC ("Defendant" or "Google") hereby serves these Amended Invalidity and Subject Matter Eligibility Contentions ("Invalidity Contentions" or "Contentions") concerning U.S. Patent Nos. 8,090,025 ("'025 patent"), 9,986,303 ("'303 patent"), 10,218,995 ("'995 patent"), 9,042,448 ("'448 patent"), 8,230,101 ("'101 patent") and 7,804,891 ("'891 patent") (collectively "Asserted Patents") and accompanying document production on Plaintiff Advanced Coding Technologies LLC ("Plaintiff" or "ACT"). Each of the claims asserted by ACT is invalid under at least 35 U.S.C. §§ 101, 102, 103, and/or 112.[1]

II. GENERAL STATEMENT AND RESERVATION OF RIGHTS

A. Asserted Claims

ACT has served Defendant with Infringement Contentions pursuant to P.R. 3-1, alleging infringement of the following claims of the '025 patent, the '303 patent, the '995 patent, '448 patent, '101 patent, and the '891 patent (the "Asserted Claims"):

Patent	Asserted Claims	ACT's Alleged Priority
'025 patent	1, 3-4, 6-10	April 17, 2006
'303 patent	1-2	March 31, 2014
'995 patent	1-4, 8-11	May 30, 2008
'448 patent	1-3	May 30, 2008
'101 patent	1-5, 7	March 2, 2007
'891 patent	1-4, 6, 8-9	March 31, 2004

[1] References to Title 35 of the United States Code are to statutes prior to amendment under the America Invents Act ("AIA"), to the extent that the Asserted Patents have effective filing dates prior to applicable AIA effective dates, and to the current statutory provisions with respect to Asserted Patents having effective filing dates after the applicable AIA effective dates.

Pursuant to P.R. 3-3 and 3-4 and Judge Gilstrap's Standing Order, Defendant hereby provides disclosures and related documents pertaining only to the Asserted Claims identified by ACT in its Infringement Contentions. To the extent that ACT is permitted to assert additional claims against Defendant in the future, Defendant reserves all rights to disclose new or supplemental Contentions regarding such claims.

By identifying ACT's alleged priority date for the Asserted Claims of each patent above, Defendant does not concede that ACT's claims of priority are correct.

Defendant provides these disclosures consistent with the schedule currently in place, and does so without waiving any right to receive from ACT such full and complete specific infringement disclosures as should have been provided from the outset. ACT's Infringement Contentions are deficient in multiple respects and do not provide Defendant with sufficient information to understand the specific accused features and components and the alleged factual and evidentiary bases for ACT's allegations.

B. Claim Construction

The Court has not yet construed the Asserted Claims in this case. Defendant reserves all rights to modify, amend, and/or supplement its Contentions in accordance with P.R. 3-6 and/or Standing Order (c) following the Court's claim construction ruling or upon disclosure, alteration, or clarification by ACT of its proposed claim constructions to the extent permitted by this Court. Defendant also may modify, amend, and/or supplement these Contentions in response to any allegedly supporting evidence offered by ACT, any report from any expert witness for ACT regarding claim construction, infringement, or validity issues.

Defendant's Contentions are based in part on its present understanding of ACT's Infringement Contentions. In some instances, ACT's Infringement Contentions contradict the teachings of the Asserted Patents, contradict the understanding of the claim terms by a person of

ordinary skill in the art, are internally inconsistent, are vague and conclusory concerning how the claim limitations supposedly read on the accused products or activities, and do not sufficiently allege how Defendant infringes the Asserted Patents with any meaningful level of detail. As a result, Defendant is currently unable to fully discern ACT's position regarding the construction of these claim limitations. Defendant accordingly reserves the right to modify, amend, and/or supplement its Contentions.

Defendant's Contentions do not represent its agreement or view as to the meaning of any claim term contained therein. To the extent that Defendant asserts that prior art is anticipatory or renders obvious claims based on any apparent construction of the Asserted Claims by ACT, Defendant's Contentions are not—and should not be interpreted as—adoptions of or admissions as to the accuracy of that scope or construction.[2] Further, the citation of prior art herein and the accompanying exhibits are not intended to reflect Defendant's claim construction contentions, which will be disclosed in due course in accordance with the Third Amended Docket Control Order (D.I. 46). Instead, Defendant's Contentions as set forth herein and in the accompanying exhibits may reflect Plaintiff's apparent claim constructions based on its Infringement Contentions, with which Defendant disagrees.

Thus, Defendant's Contentions herein are not, and should in no way be seen as, admissions or adoptions as to any particular claim scope or construction, any priority date, any admission that any claims have been properly asserted in this case, or as any admission that any aspect of any accused products or systems meets any particular claim element in any particular way. Defendant

[2] Defendant does not concede that Plaintiff's apparent interpretation of the claims is correct, but rather assert the well-established principle that whatever infringes a claim if later in time anticipates if earlier in time. *Bristol-Myers Squibb Co. v. Ben Venue Labs., Inc.*, 246 F.3d 1368, 1378 (Fed. Cir. 2001). Thus, where Plaintiff for purposes of its infringement case alleges that a feature of an accused product meets a particular limitation recited in one or more of the Asserted Claims, then that feature, should it be found in the prior art, would also cause that limitation to be met for invalidity purposes.

objects to any attempt to imply claim construction from the attached charts. These Contentions are made under a variety of alternatives and do not represent Defendant's agreement or view as to the meaning, definiteness, written description support for, or enablement of any claim contained therein. Nothing in these initial invalidity contentions should be interpreted as an admission that any claim satisfies the written description, enablement, or definiteness requirements of 35 U.S.C. § 112. Similarly, nothing in these initial invalidity contentions concerning the failure of any claim to satisfy 35 U.S.C. § 112 should be interpreted as an admission that any element in the prior art fails to disclose any element in the claimed inventions of the Asserted Claims of the Asserted Patents.

Defendant therefore takes no position on any matter of claim construction in these Contentions. Defendant may and reserves the right to propose any claim construction it considers appropriate and to contest any claim construction it considers inappropriate. Defendant also may argue that certain claim terms, phrases, and elements are indefinite, lack written description, are not enabled, are not patentable, are not novel and/or are otherwise invalid under 35 U.S.C. §§ 101 et. seq.

Because of the uncertainty of claim construction, Defendant may further supplement or modify the positions and information in these Contentions, including, without limitation, the prior art and grounds of invalidity set forth herein, after the Asserted Claims have been construed, in accordance with the Third Amended Docket Control Order (D.I. 46) and any other applicable court orders.

C. Doctrine of Equivalents

ACT has not provided any particularized contention that any claim limitation is allegedly satisfied under the doctrine of equivalents; therefore, any allegations that ACT has made regarding doctrine of equivalents is insufficient. Should ACT receive leave to amend to add to its contentions

any specific allegations of infringement under the doctrine of equivalents, Defendant may amend and supplement these Contentions, as appropriate.

D. Ongoing Discovery and Disclosures

Discovery in this case is in its early stages and Defendant's investigation, including Defendant's search for prior art, is ongoing. ACT has not yet provided documentation regarding prior art, derivation, conception, or reduction to practice of the alleged inventions in its possession, custody, or control. Defendant reserves all rights to modify, amend, and/or supplement these Contentions based on any supplemental materials received through the discovery process, to the extent permitted by this Court. In addition, third-party products constitute relevant prior art to the Asserted Patents. The relevant details about these products are in the possession, custody, or control of third parties.

Defendant may supplement, amend, and/or alter the positions taken and information disclosed in these Contentions including, without limitation, the prior art and grounds of invalidity and subject matter ineligibility set forth herein, to take into account information or defenses that may come to light as a result of Defendant's discovery efforts and ongoing investigation. Defendant may supplement, amend, and/or alter the positions taken and information disclosed in these Contentions, pursuant to the Third Amended Docket Control Order (D.I. 46). Defendant hereby incorporates by reference the relevant testimony of any fact witnesses who is deposed, provides declarations, or otherwise testifies in this lawsuit. Defendant also hereby incorporate by reference the reports and testimony of any expert witnesses who opines on Defendant's behalf regarding the Asserted Patents.

E. Additional Reservation of Rights

The accompanying invalidity claim charts in the attached Appendices identify specific instances where prior art references or systems disclose, either expressly, implicitly in the larger

context of the passage, or inherently, each limitation of the Asserted Claims and/or examples of disclosures in view of which a person of ordinary skill in the art would have considered each limitation obvious. However, persons having ordinary skill in the art may view an item of prior art generally in the context of their experience, training, other publications, literature, products, and understanding. Accordingly, Defendant reserves the right to rely on portions of the prior art references that are not cited and on other publications and expert testimony as aids in understanding and interpreting the cited portions, as providing context thereto, and as additional evidence that a claim limitation is known or disclosed. Defendant further reserves the right to rely on portions of the prior art references that are not cited, other publications, and testimony to establish bases for combinations of certain cited references that render the Asserted Claims of the Asserted Patents obvious. Citations included in these charts for independent claims necessarily also apply to their associated dependent claims. Defendant has endeavored to identify examples of the most relevant portions of the references, but the references may contain additional support for particular claim limitations. Defendant may rely on uncited portions of the prior art references, other documents, and/or physical implementations, as well as fact and expert testimony, to provide context or to aid in understanding the cited portions of the references. Defendant reserves the right to rely on a prior disclosure from a printed publication of any prior art reference cited herein, including U.S. and international patent publications. Defendant may rely on any prior art system referenced, embodied, or described in any of the prior art references identified herein, or which embodies any of the prior art references identified herein.

The references discussed in the claim charts, or elsewhere identified, may disclose the limitations of the Asserted Claims of the Asserted Patents explicitly and/or inherently. The prior art references may also be relied upon to show the state of the art in the relevant time frame, as

well as the "References Cited" on the face of the Asserted Patents and the patents cited within the body of the Asserted Patents. The exemplary obviousness combinations are provided in the alternative to Defendant's anticipation contentions, and are not to be construed to suggest that any reference is not itself anticipatory.

Additionally, ACT has not identified its contentions regarding the level of ordinary skill in the art for any of the Asserted Patents. Thus, Defendant has based their Invalidity and Subject Matter Eligibility Contentions on the level of skill in the art apparent from the face of the Asserted Patents. For the avoidance of doubt, Defendant contends that the Asserted Claims are invalid for the reasons set forth in their Invalidity and Subject Matter Eligibility Contentions under any plausible definition of the level of ordinary skill for each of the Asserted Patents. Nevertheless, Defendant reserves the right to revise these Invalidity Contentions and Subject Matter Eligibility Contentions in response to any position taken by ACT on the level of ordinary skill in the art applicable to a given Asserted Patent.

Moreover, Defendant may rely on inventor admissions concerning the scope of the prior art relevant to the Asserted Patents found in, *inter alia*, the prosecution histories of the Asserted Patents and related patents and/or patent applications, any testimony or declarations of the named inventor concerning the Asserted Patents or related patents, and any papers or evidence submitted by ACT in connection with this litigation, any other pending or future litigation or proceedings brought involving the Asserted Patents or related patents, or *inter partes* review proceedings involving the Asserted Patents or related patents. During prosecution of the Asserted Patents, Applicant made numerous admissions concerning prior art in the specification and/or the prosecution history, including admissions that certain claim elements of certain Asserted Claims of the Asserted Patents were present in the prior art. ACT is thus estopped from taking positions

inconsistent with its admissions in the prosecution history of the Asserted Patents. Defendant thus reserves the right to assert that ACT should be estopped from arguing that prior art does not disclose the claim elements that it has already admitted are disclosed in the prior art. Defendant also reserves all rights to establish what was known to a person having ordinary skill in the art through other publications, products, and/or testimony.

Where Defendant cites to a particular figure in a reference, the citation should be understood to encompass the caption of the figure and all other text relating to and/or describing the figure. Similarly, where Defendant cites to particular text referring to a figure, the citation should be understood to include the figure and related figures as well. Moreover, Defendant may rely on uncited portions of the identified prior art, other art, or expert testimony to provide context to or aid in understanding the cited portions of the identified prior art. Defendant also may rely upon treatises, published industry standards, and similar documents to demonstrate the knowledge of one of ordinary skill in the relevant art.

In addition to the positions and prior art identified in these Invalidity Contentions and (including the accompanying claim charts), Defendant also incorporates by reference all invalidity contentions and subject matter eligibility contentions, prior art,[3] and invalidity claim charts (including, without limitation, all anticipation positions, obviousness positions [including all prior art combinations and motivations to combine], indefiniteness positions, written description positions, and non-enablement positions) concerning one or more of the Asserted Patents, as disclosed at any time. This includes without limitation disclosures in previous or related litigation, in United States Patent & Trademark Office ("USPTO") proceedings, by the Plaintiff, by any other parties accused of patent infringement by the Plaintiff, or by the named inventors or any individuals

[3] Prior art appearing in the file histories of the Asserted Patents is not required to be separately produced by Defendant under P. R. 3-4(b).

associated with the prosecution and/or any form of post-grant review or reexamination of the Asserted Patents.

Specifically, for example, Defendant identifies, as prior art upon which it may rely to show the invalidity of the Asserted Claims, the prior art references disclosed by parties in any other litigation (including *inter partes* review and/or reexamination proceedings) involving one or more of the Asserted Patents, any patent related to any of the Asserted Patents, and/or any other patent allegedly assigned to Plaintiff claiming priority to the Asserted Patents (collectively, "Other ACT Proceedings"). For example, Defendant expressly identifies and intend to rely on the prior art and invalidity arguments raised in of the Asserted Patents, any patent related to any of the Asserted Patents, and/or any other patent allegedly assigned to Plaintiff claiming priority to the Asserted Patents (collectively, "Other ACT Proceedings"). For example, Defendant expressly identifies and may rely on the prior art and invalidity arguments raised in IPR2024-00374, IPR2024-00327, IPR2024-00372 (collectively, "Samsung IPRs") and the prior *Advanced Coding Techs. v. LG Elecs.*, No. 2:22-cv-00501-JRG (E.D. Tex. July 18, 2024), D.I. No. 148-3 (Ex. B Samsung's May 30, 2024 Amended Invalidity and Subject Matter Eligibility Contentions) litigation involving some of the same Asserted Patents and Asserted Claims. *See, e.g.*, ADVANCED_CODING_0031598. Defendant also expressly identifies and may rely on the prior art and invalidity arguments raised in the ongoing *Advanced Coding Techs. v. Apple, Inc.*, No. 2:22-cv-00572-JRG (E.D. Tex.) litigation involving the same Asserted Patents. This includes, but is not limited to, Apple's Invalidity and Subject Matter Contentions, which have not yet been produced by ACT in this litigation. *See, e.g., id.* at D.I. 42 (Third Amended Docket Control Order).

Defendant's identification in the prior art of claim elements recited in the preamble of any claim is not intended to indicate that any such preamble is limiting. All such disclosures are made only to the extent the preamble is determined to be limiting.

Additionally, in view of likely third-party discovery that will be taken, Defendant reserves the right to present additional items of prior art under 35 U.S.C. §§ 102(a), (b), (e), and/or (g) and/or § 103(a) located during discovery or further investigation, and to assert contentions of invalidity under 35 U.S.C. §§ 102(c), (d), or (f). For example, Defendant expects to issue subpoenas to third parties believed to have knowledge, documents, and/or other evidence concerning invalidity of one or more of the Asserted Claims.

Defendant reserves the right to allege that the Asserted Claims of the Asserted Patents are invalid under 35 U.S.C. § 102(f) in the event that Defendant obtains evidence that the inventors named in the Asserted Patents did not invent (either alone or in conjunction with others) the subject matter claimed in the Asserted Patents. If Defendant obtains such evidence, it will provide the name of the person(s) from whom and the circumstances under which the invention or any part of it was derived.

Subject to the foregoing statements and qualifications, Defendant provides the following:

III. INVALIDITY CONTENTIONS

The identified prior art references and systems below disclose the limitations of the Asserted Claims of the Asserted Patents explicitly, inherently, or as part of an obvious combination, and may also be relied upon to show the state of the art at the relevant times. Defendant may also rely upon persons identified as inventors of the prior art patents, authors of the prior art publications, individuals with personal knowledge of prior art systems, and/or others as they become identified through further discovery. In addition, Defendant may rely upon the

facts developed in discovery of prior invention or derivation of the alleged inventions claimed in the Asserted Patents.

Defendant reserves the right to argue that various portions of the Asserted Claims, such as an intended use or result, non-functional descriptive material, optional features, and certain preamble language, are entitled to no patentable weight. Mapping of a portion of an asserted claim to a prior art reference does not represent that such portion of the claim is entitled to patentable weight when comparing the claimed subject matter to the prior art. Nor do references herein to claim language as a "limitation" or "element" admit that the claim language has patentable weight. Defendant not only relies upon the prior art disclosed herein, but also relies on any commercial embodiments and accompanying literature of the various assignees that correspond to the respective disclosures found within the prior art disclosed herein. The comparable and expanded disclosures of the assignees' various and respective commercial embodiments and/or corresponding literature anticipate and/or render obvious the claims of the Asserted Patents for at least the reasons disclosed in these Invalidity Contentions and claim charts. Defendant also reserves the right to rely on related patents, published applications, foreign patents or publications, and other patent documents as necessary to establish prior art status of or clarify the disclosures cited.

ACT has not yet provided discovery on products embodying the Asserted Patents that may have been previously used, publicly disclosed, published, offered for sale or sold prior to the alleged invention of the Asserted Patents. Additionally, ACT has not yet provided any documents relating to conception or reduction to practice of the Asserted Patents. Defendant reserves the right to supplement or amend these contentions based on future discovery related to ACT products

embodying the Asserted Patents or refuting any alleged earlier conception date, including but not limited to documentary evidence subpoenaed from third parties.

To the extent that prior art identified by Defendant as anticipating is found not to anticipate, Defendant further contends the prior art establishes that the claimed subject matter was obvious to a person of ordinary skill in the art at the time of the alleged invention. In addition, obviousness is supported by the discussions in the cited references, the state of the art discussed in the references, and the knowledge of one of ordinary skill in the art as discussed below in Sections III and V.

While Defendant has identified at least one citation per element or limitation for each reference identified in the charts, each and every disclosure of the same element or limitation in the same reference is not necessarily identified. In an effort to focus the issues, Defendant has cited exemplary relevant portions of identified references even where a reference may contain additional disclosures for a particular claim element or limitation. Defendant reserves all rights to rely on other portions of the identified references to support its claims and defenses. Persons of ordinary skill in the art generally read a prior art reference as a whole and in the context of other publications and literature. Defendant may rely on un-cited portions of the prior art references and on other publications and expert testimony to provide context and as aids to understanding and interpreting the portions of the prior art references that are cited. Disclosures relating to initial elements of dependent claims are disclosed in connection with the independent claims from which they depend.

A. U.S. Patent No. 8,090,025

1. Alleged Priority Date

A "patent may only claim priority to an earlier application if the earlier application fulfills the requirements of § 112, first paragraph, which requires, in part, that the application 'shall contain a written description of the invention, and of the manner and process of making and using

it, in such full, clear, concise, and exact terms as to enable any person skilled in the art to which it pertains, or with which it is most nearly connected, to make and use the same.'" *Chiron Corp. v. Genentech, Inc.*, 363 F.3d 1247, 1253 (Fed. Cir. 2004). ACT has failed to establish that any Asserted Claim is entitled to a priority date based on the filing of any earlier application. Defendant reserves its right to identify additional bases for this contention in response to ACT's subsequent arguments and positions, any amendments that ACT makes to its own contentions, the Court's claim construction, or information uncovered during further discovery.

Defendant does not agree, and therefore disputes, that the Asserted Claims of the '025 patent are entitled to the priority date asserted by ACT. Additionally, ACT provides no contention nor any evidence in its infringement contentions demonstrating that the '025 patent was invented earlier than the effective filing date of its earliest foreign application, Japan Patent Application No. 2006-112995, filed April 17, 2006. *See* Infringement Contentions at 7. Thus, the '025 patent is not entitled to any date of invention earlier than the effective filing date of its earliest foreign application, which ACT alleges is April 17, 2006. Defendant's disclosure of prior art is premised on the alleged priority date as identified in Plaintiff's Infringement Contentions. Defendant contends Plaintiff is not entitled to the alleged priority date and reserves the right to modify, amend, or supplement its invalidity contentions with additional prior art references if any Asserted Claim is shown to not be entitled to the respective alleged priority date. Defendant objects to ACT alleging or providing evidence of any earlier date of invention; all such evidence is fully within ACT's control and to the extent ACT claims an earlier priority date, it needed to do so in its infringement contentions. To the extent ACT is able and permitted to assert an earlier date of invention for any of the Asserted Patents, Defendant may modify, amend, and/or supplement these

Invalidity Contentions, including, but not limited to its identification and production of additional prior art.

2. General State of the Art at the Time of the Alleged Invention

The claimed invention of the ’025 patent is directed to using a “boundary condition” when encoding and decoding video to reduce “discontinuity on a block border and mismatching of texture data.”

The prior art identified below (including the “References Cited” on the face of the ’025 patent) may provide background and context pertinent to the teachings, and interpretation of, the prior art referenced by the claim charts.

For example, in the Background section, the ’025 patent cites to WO 2003/003749, and credits it as already having taught a “method to remedy the discontinuous situation on an MC-block border,” which is same problem as what the ’025 patent purports to solve. WO 2003/003749 was published in the United States as US Pub No. 2004/0184666 (Sekiguchi) and uses the method of overlapped motion compensation (OBMC), which was well known in the art at the time the application leading to the ’025 patent was filed. As explained by Sekiguchi, OBMC solves “block boundary discontinuity.” Other references that describe OBMC, prior to the filing of the ’025 patent, include Sekiguchi, Watanabe, Lee 896, Lee 725, Woods, H.263, H.264, Nogaki, Orchard, Kuo, Akramullah, Rajagopalon, and Pschernig. Moreover, beyond OBMC, using boundary conditions to reduce discontinuity, in general was well-known, including the use of Poisson’s Equation, as shown in Saito, Yamitani, and Shen.

Moreover, the general processes for encoding and decoding, including the use of standard components such as encoders and decoders, as well as the use of multiplexers, demultiplexers, motion estimators, motion compensators, combiners, subtractors, orthogonal transformers, quantizers, inverse-quantizers, and inverse orthogonal transformers, was also well known, as

shown in Al-Mualla, Ahmad, H.263, H.264. MPEG-4, Jung 768, Kim 700, Lee 982, Maeda, Miyamoto, Sekiguchi, Woods, Lee 725, Jung 207, and Tian.

Furthermore, the use of selectors to select between predictive pictures, including pictures produced by different motion compensation methods, was also well-known, as shown in Takenaka, Usubuchi, and Henot.

In addition to the prior art admitted by the '025 patent, the references that anticipate and/or render obvious one or more Asserted Claims are identified in the claim charts of Exhibits A01-A33 (collectively, "Appendix A") and in Section III.A.3, *infra*.

3. Disclosure of Prior Art References (P.R. 3-3(a))

Pursuant to P.R. 3-3(a), Defendant identifies at least the following prior art now known to it to anticipate and/or render obvious one or more of the Asserted Claims of the '025 patent, either expressly, implicitly, or inherently as understood by a person having ordinary skill in the art.

a) Prior Art Patents, Patent Applications, And Publications

In addition to the prior art admitted by the '025 patent, the following patents, patent applications, and publications are prior art to the '025 patent under at least 35 U.S.C. §§ 102(a), (b), (e), and/or (g), and anticipate and/or render obvious the Asserted Claims of the '025 patent:

Table 1-A: Prior Art Patents and Patent Applications for the '025 Patent

Patent or Patent Application No.	Country of Origin	Date of Issue (if Issued Patent)	Exhibit[4]	Anticipates	Renders Obvious
US 4,743,967 ("Takenaka")	United States	5/10/1988	A1		X
US 5,790,207 ("Jung 207")	United States	8/4/1998	A2		X

[4] Exhibit numbers have only been listed for primary references. Additional prior art references that disclose and render obvious certain elements are described in Sections III.A.4-.5 *infra*, as well as the discussion of the general state of the art in Section III.A.2, *supra*.

US 5,878,169A (“Miyamoto”)	United States	3/2/1999	A3		X
US 6,144,700A (“Kim 700”)	United States	11/7/2000	A4		X
US 6,625,316 (“Maeda”)	United States	9/23/2003	A5		X
US 20040141615A1 (“Chujoh”)	United States	7/22/2004	A6		X
US 20040184666 (“Sekiguchi”)	United States	9/23/2004	A7		X
US 20040252896 (“Lee 896”)	United States	12/16/2004	A8		X
US 20050078755A1 (“Woods”)	United States	4/14/2005	A9		X
US 20060268982A1 (“Lee 982”)	United States	11/30/2006	A10		X
US 20070030894A1 (“Tian”)	United States	2/8/2007	A11		X
JPH 08265768A (“Jung 768”)	Japan	10/11/1996	A12		X
KR 20040074725A (“Lee 725”)	Korea	8/26/2004	A13		X
US 4,633,325 (“Usubuchi”)	United States	12/30/1986			X
US 4,951,138 (“Henot”)	United States	8/21/1990			X
US 5,414,804A (“McWaid”)	United States	5/9/1995			X
US 5,592,228 (“Dachiku”)	United States	1/7/1997			X
US 5,602,593 (“Katto”)	United States	2/11/1997			X
US 5,689,307 (“Sugahara”)	United States	11/18/1997			X
US 5,812,733 (“Eto”)	United States	9/22/1998			X
US 5,912,815A (“Kim 815”)	United States	6/15/1999			X
US 6,081,551A (“Etoh”)	United States	6/27/2000			X
US 6,333,949 (“Nakagawa”)	United States	12/25/2001			X
US 6,415,055B1 (“Kato”)	United States	7/2/2002			X
US 6,553,149B1 (“Chun”)	United States	4/22/2003			X

US 6,646,578B1 (“Au”)	United States	11/11/2003			X
US 6,760,480B2 (“Hata”)	United States	7/6/2004			X
US 6,954,156B2 (“Kadono”)	United States	10/11/2005			X
US 7,596,279B2 (“Sugimoto”)	United States	9/29/2009			X
US 8,059,903 (“Yamatani 903”)	United States	11/15/2001			X
US 20010017944A1 (“Kalevo”)	United States	8/30/2001			X
US 20020067432A1 (“Kondo”)	United States	6/6/2002			X
US 20030138049A1 (“Ahn”)	United States	7/24/2003			X
US 20040008784A1 (“Kikuchi”)	United States	1/15/2004			X
US 20050169374A1 (“Marpe”)	United States	8/4/2005			X
US 20050201462A1 (“Ridge”)	United States	9/15/2005			X
US 20050201633A1 (“Moon”)	United States	9/15/2005			X
US 20050254722A1 (“Fattal”)	United States	11/17/2005			X
US 20060013310A1 (“Lee 310”)	United States	1/19/2006			X
US 20060268982A1 (“Lee 982”)	United States	11/30/2006			X
U.S. Provisional Patent App. No. 60/629,094 (“Yamatani-Prov”)	United States	11/17/2004			X
WO 2000051357A1 (“Lee 357”)	WO	8/31/2000			X
WO 2004100556A2 (“Davies”)	WO	11/18/2004			X
WO 2005107267A1 (“Murakami”)	WO	11/10/2005			X
JP 2001128183A (“Sagada”)	Japan	5/11/2001			X
JPH 07274180A (“Tomonaga”)	Japan	10/20/1995			X
JPH 10243401A (“Yokoyama”)	Japan	9/11/1998			X

US 8,107,533 ("Kondo-533")	United States	1/31/2012	A32		X
US 2012/0099652 ("Woods-652")	United States	4/26/2012	A33		X

Table 2-A: Prior Art Publications for the '025 Patent

Title	Date of Publication	Author/ Publisher	Exhibit[5]	Anticipates	Renders Obvious
Motion Vector Estimation using Edge Oriented Block Matching Algorithm for Video Sequences ("Ahmad")	2000	Muhammad Bilal Ahmad	A14		X
Video coding for mobile communications: efficiency, complexity and resilience ("Al-Mualla")	2002	Mohammed Ebrahim Al-Mualla	A15		X
ITU-T Rec. H.263 (02/98) ("H.263")	2/1998		A16		X
ITU-T Rec. H.264 (05/2003) ("H.264")	5/1/2003		A17		X
Information technology — Coding of audio-visual objects — Part 2: Visual ("MPEG-4")	12/1/2001		A18		X
The Polyharmonic Local Sine Transform: A New Tool For Local Image Analysis and Synthesis	6/27/1905	Naoki Saito	A19		X

[5] Exhibit numbers have only been listed for primary references. Additional prior art references that disclose and render obvious certain elements are described in Sections III.A.4-.5 *infra*, as well as the discussion of the general state of the art in Section III.A.2, *supra*.

Without Edge Effect (“Saito”)					
A concealment method for video communications in an error-prone environment (“Shirani”)	6/1/2000	Shahram Shirani	A20		X
Improvement of DCT-based Compression Algorithms Using Poisson’s Equation (“Yamatani”)	2005 and 2006	Katsu Yamatani	A21		X
Akramullah, Optimization of H.263 Video Encoding Using a Single Processor Computer: Performance Tradeoffs and Benchmarking	6/23/1905	Akramullah			X
Ahmadianpour, Novel techniques for reducing blocking artifacts in motion compensated frame (“Ahmadianpour”)	6/28/1905	Ahmadianpour			X
Averbuch et al., A Fast Poisson Solver of Arbitrary Order Accuracy in Rectangular Regions (“Averbuch”)	6/20/1905	Averbuch			X
Braverman et al., A Fast 3D Poisson Solver of Arbitrary Order Accuracy (“Braverman”)	6/20/1905	Braverman			X
Chen, Error Concealment Using Refined Boundary Matching	6/25/1905	Chen			X

Algorithm ("Chen 2003")					
Haskell et al., Digital Video: An Introduction to MPEG 2, Chapter 9 ("Haskell") (available for inspection)	6/24/1905	Haskell			X
Kearney, Optical Flow Estimation: An Error Analysis of Gradient-Based Methods with Local Optimization ("Kearney")	6/9/1905	Kearney			X
Kuo, Fast Overlapped Block Motion Compensation with Checkerboard Block Partitioning ("Kuo")	6/20/1905	Kuo			X
Rob Koenen, MPEG-4 Overview WG11 (MPEG), V.21	6/24/1905	Rob Koenen			X
Satoshi Nogaki and Mutsumi Ohta, An Overlapped Block Motion Compensation for High Quality Motion Picture Coding ("Nogaki")	6/14/1905	Satoshi Nogaki			X
Michael Orchard and Gary Sullivan, Overlapped Block Motion Compensation: An Estimation-Theoretic Approach ("Orchard")	6/16/1905	Michael Orchard			X
Pererira and Ebrahimi, The MPEG-4 Book,	6/24/1905	Pererira			X

Chapter 8 (“The MPEG-4 Book”) (available for inspection)					
Parallel Overlapped Block-Matching Motion Compensation Using MPI and OpenMP (“Pschernig”)	6/26/1905	E. Pschernig			X
C. Reader, “History of MPEG Video Compression”, (“Reader”)	6/24/1905	C. Reader			X
E.G. Richardson, H.264 and MPEG-4 Video Compression, 2003 (“Richardson”)	6/25/1905	E.G. Richardson			X
Rajagopalan, Fast Motion Estimation Algorithms for Overlapped Block Motion Compensation (“Rajagopalan”)	6/18/1905	Rajagopalan			X
Gradient Based Image Completion by Solving Poisson Equation (“Shen”)	6/27/1905	Jianbing Shen			X
Sodagar, MPEG-DASH: The Standard for Multimedia Streaming Over Internet (“Sodagar”)	4/1/2012	Sodagar			X
T. Stockhammer, et al., “H.264/AVC in Wireless Environments,” in IEEE Trans. on Circuits and	7/1/2003	T. Stockhammer			X

[redacted]

Systems for Video Tech., vol. 13, no. 7 (“Stockhammer”)					
Wang et al., Video Processing and Communications (“Wang”)	6/23/1905	Wang			X
Watanabe and Singhal, Windowed Motion Compensation (“Watanabe”)	6/13/1905	Hiroshi Watanabe			X
John Watkinson, The MPEG Handbook MPEG-1 MPEG-2 MPEG-4 (“Watkinson”) (available for inspection)	6/23/1905	John Watkinson			X
Polyharmonic Local Cosine Transform for Improving the Reproduction Quality of JPEG-Compressed Images (“Yamatani 2”)	6/28/1905	Katsu Yamatani			X
Prosecution History of U.S. Patent App. No. 11/667,848 (“Yamatani-FH”)	5/26/2006				X
Jucheng Zhao, Naoki Saito, and Katsu Yamatani, PHLFT5: A Practical and Improved Version of Polyharmonic Local Fourier Transform (“Zhao”)	6/27/1905	Jucheng Zhao			X
CoreCodec.com (“CoreCodec”)	2/1/2006				X

CoreAVC Video Codec Decoder Editions ("CoreAVC")	6/7/2006				X
x264 guide ("x264 Guide")	4/1/2005				X
Encoding with the x264 codec ("x264")	12/1/2005				X
A Generalized Hypothetical Reference Decoder for H.264/AVC ("Ribas-Corbera")	7/1/2003	Ribas-Corbera			X
FFmpeg Documentation ("FFmpeg Documentation")	8/1/2008				X
Welcome to the datatype project! ("Helix 2006")	6/28/1905				X
MSM7200 Chipset Solution ("MSM7200")	6/28/1905				X
git.videolan.org/ffmpeg.git/commitdiff (Dec. 29, 2005) ("VLC commitdiff")	12/1/2005				X
VLC User Guide ("VLC Guide")	6/25/1905				X

b) Prior Art Systems

Numerous systems are prior art to the '025 patent under at least 35 U.S.C. §§ 102(a), (b), (e), and/or (g), and anticipate and/or render obvious the Asserted Claims of the '025 patent. These systems also include physical implementations of prior art patents, patent applications, and publications identified herein that were known, made, used, sold, offered for sale, or imported into this country prior to the effective filing dates of the '025 patent, including those identified above and discussed in the sections below. Defendant's reference to a particular product, device, or

software program in these contentions should be interpreted as a reference to the system itself as well as to any corresponding patents, publications, or product literature relating to the cited system. Although Defendant's investigation continues, information available to date indicates that numerous systems, including the FFmpeg System cited in Appendix A, were (1) known or used in this country before the alleged invention of the claimed subject matter of the Asserted Claims, (2) in public use and/or on sale in this country more than one year before the priority dates of the '025 patent, and/or (3) invented by another who did not abandon, suppress, or conceal, before the alleged invention of the claimed subject matter of the Asserted Claims.

In addition Defendant may rely on systems or other embodiments of the subject matter described in each of the references described above. Each of the references cited in support of the above systems may also be prior art individually under 35 U.S.C. §§ 102(a), (b), (e), and/or (g).

As discovery is ongoing, Defendant continues to investigate these items and may amend or supplement these contentions to include additional information or documents regarding such products and/or systems.

Table 3-A: Prior Art Systems and Inventions for the '025 Patent

Name of System or Invention	Date of Sale/ Offer for Sale / Public Use / Known by Others	Exhibit	Anticipates	Renders Obvious
Systems Implementing H.263	2/1998	A22	X	X
Systems Implementing H.264	5/2003	A23	X	X
CoreAVC	2/2006	A24	X	X
FFmpeg	4/2006	A25	X	X
Helix	2006	A26	X	X
HRD	7/2003	A27	X	X
MSM7200	2006	A28	X	X

Quicktime	3/2005	A29	X	X
VLC Media Player	12/2005	A30	X	X
x264	4/2005	A31	X	X
Adobe Flash Player	2002		X	X
Apple iPhone	2007		X	X
Apple TV	2007		X	X
HTC Touch Cruise Phone	2008		X	X
HTC Touch Dual Phone	2007		X	X
Adobe Flash Player 9	2007		X	X
Qualcomm MSM7200 Chipset Solution	2007		X	X
Horizon Semiconductor Hz7220 System-On-a-Chip Solution	2007		X	X
Xbox Media Center (XBMC) / Kodi	2002		X	X
Sony Playstation	1994		X	X
Sony Playstation 2	2000		X	X
Sony Playstation Portable (PSP)	2004		X	X
Microsoft Xbox	2001		X	X
Microsoft Xbox 360	2005		X	X
Roku PhotoBridge HD1000 Product (“Roku Product”)	2003		X	X
Roku PhotoBridge HD1000 System (“Roku System”)	2003		X	X
MPEG-2 SAVI Decoder, Hyundai Electronics	1995		X	X
VidyoRoom	2008		X	X
VidyoPortal	2008		X	X
VidyoDesktop	2008		X	X
Cisco Webex Platform (“Webex”)	2007		X	X

Polycom HDX4000 (“Polycom HDX4000”)	2007		X	X
RADVISION Interactive Video Platform	2006		X	X
Click to Meet™	2006		X	X
SCOPIA™	2006		X	X
NVIDIA GeForce 8600	2007		X	X
Radeon X1000-series	2005		X	X
ATI Technologies Unified Video Decoder	2008		X	X
STI7200	2007		X	X
Apple Mac OS X v10.4	2005		X	X
Microsoft Windows Vista	2006		X	X
Broadcom BCM7411	2004		X	X
Conexant CX2418X	2004		X	X
Systems Implementing MPEG-2			X	X
Systems Implementing MPEG-4			X	X
Systems Implementing H.262			X	X
Systems Implementing VC1			X	X
Systems Implementing DivX			X	X
Systems Implementing Xvid			X	X

[redacted]

4. Anticipation and Obviousness Under P.R. 3-3(b) and (c)

35 U.S.C. § 102(a) provides that "[a] person shall be entitled to a patent unless . . . the invention was known or used by others in this country, or patented or described in a printed publication in this or a foreign country, before the invention thereof by the applicant for patent . . . ." To be anticipatory, a reference must describe, either expressly or inherently, each and every limitation and enable one of skill in the art to practice an embodiment of the claimed invention without undue experimentation. *Stored Value Solutions, Inc. v. Card Activation Technologies, Inc.*, 2012 WL 6097674, at *8 (Fed. Cir. 2012). A reference may anticipate inherently if a claim limitation that is not expressly disclosed "is necessarily present, or inherent, in the single anticipating reference." *In re Aoyama*, 656 F.3d 1293, 1337 (Fed. Cir. 2011) (quoting *Schering Corp. v. Geneva Pharm., Inc.*, 339 F.3d 1373, 1377 (Fed. Cir. 2003)); *Akamai Technologies, Inc. v. Cable & Wireless Internet Services, Inc.*, 344 F.3d 1186, 1195 (Fed. Cir. 2003) (finding hierarchical DNS servers inherent in any Internet system).

Each of the Asserted Claims of the '025 patent is anticipated and/or rendered obvious by prior art. Pursuant to P.R. 3-3(b), Defendant identifies the prior art references that anticipate or render obvious an Asserted Claim in the claim charts of Appendix A, which are hereby incorporated by reference as if fully set forth herein, and in Section III.A.3.

Pursuant to P.R. 3-3(c), the claim charts of Appendix A, provide an identification where these prior art references teach or suggest each and every element of the Asserted Claims of the '025 patent. For each reference or combination of references suggested by each chart, Defendant indicates whether the prior art renders the claim anticipated and/or obvious pursuant to P.R. 3-3(b). In addition to contending that the Asserted Claims are invalid in view of the prior art references cited in the claim charts of Appendix A and admitted prior art, Defendant further contend that the Asserted Claims are invalid as anticipated and/or obvious under 35 U.S.C. §§ 102(a) and/or (b) in

view of public knowledge and uses and/or offers for sale of products and services related to the subject matter of the cited references. Reference to a particular circuitry, software program, device or product in the claim charts of Appendix A should be interpreted as a reference to the product itself and any corresponding patents, publications, or product literature cited in Appendix A that relates to the cited circuitry, software program, device, or product. In addition, Defendant may rely on other documents or things that have not yet been located to support its contentions regarding such prior art circuit(s), software program(s), device(s) or product(s) that are referenced in the charts.

Defendant incorporates by reference, as if set forth fully herein, all prior art cited during the prosecution of the ’025 patent. In addition, Defendant identifies and hereby incorporates by reference as if set forth fully herein the prior art references that anticipate or render obvious an asserted claim as described in a future reexaminations or *inter partes* reviews of the ’025 patent, if any, that a requestor may file or the PTO may grant.

Defendant further identifies and hereby incorporates by reference as if set forth fully herein the prior art references and invalidity contentions as described in any other lawsuits wherein invalidity contentions have been, or will be, provided regarding the ’025 patent, any foreign counterparts, or any parent or child patent of the ’025 patent. *Advanced Coding Techs. v. LG Elecs.*, No. 2:22-cv-00501-JRG (E.D. Tex. July 18, 2024), D.I. No. 148-3 (Ex. B Samsung’s May 30, 2024 Amended Invalidity and Subject Matter Eligibility Contentions); *Advanced Coding Techs. v. Apple, Inc.*, No. 2:22-cv-00572-JRG (E.D. Tex.), D.I. 42 (Third Amended Docket Control Order).

Defendant may use any and all portions of the publication, related publications, commercial embodiments of the publication, and other evidence that is discovered in these

lawsuits to demonstrate and/or evidence the components, functionality, and capabilities of the devices and systems disclosed in the references charted.

Where Defendant identifies a particular figure in a prior art reference, the identification should be understood to encompass the caption and description of the figure, as well as any text relating to the figure in addition to the figure itself. Similarly, where an identified portion of text refers to a figure or other material, the identification should be understood to include the referenced figure or other material as well. It should be recognized that a person of ordinary skill in the art would generally read a prior art reference as a whole and in the context of other publications, literature, and general knowledge in the field. To understand and interpret any specific statement or disclosure in a prior art reference, a person of ordinary skill in the art would rely upon other information including other publications and general scientific or engineering knowledge. Defendant therefore may rely upon other unidentified portions of the prior art references and on other publications and expert testimony to provide context and to aid understanding and interpretation of the identified portions.

Defendant may also rely upon other portions of the prior art references, other publications, and the testimony of experts to establish that the alleged inventions would have been obvious to a person of ordinary skill in the art, including the basis of modifying or combining certain cited references. To the extent any limitation is deemed not to be met by an item of prior art, then any purported differences are such that the claimed subject matter as a whole would have been obvious to one skilled in the art at the time of the alleged invention, in view of the state of the art and knowledge of those skilled in the art. To the extent that an element of an Asserted Claim is not anticipated, the claim is rendered obvious by combination with one or more other prior art references identified in Appendix A and the admitted prior art.

[redacted]

5. Obviousness Under P.R. 3-3(b) and (c)

a) Prior Art Rendering Asserted Claims Obvious

In general, a claimed invention is unpatentable under 35 U.S.C. § 103(a) if "the differences between the subject matter sought to be patented and the prior art are such that the subject matter as a whole would have been obvious at the time the invention was made to a person having ordinary skill in the art." 35 U.S.C. § 103(a); *Graham v. John Deere Co.*, 383 U.S. 1, 13-14 (1966). The ultimate determination of whether an invention is or is not obvious is a legal conclusion based on underlying factual inquiries including: "(1) the scope and content of the prior art; (2) the level of ordinary skill in the art; (3) the differences between the claimed invention and the prior art; and (4) objective evidence of nonobviousness." *Miles Labs., Inc. v. Shandon, Inc.*, 997 F.2d 870, 877 (Fed. Cir. 1993). *See also Graham*, 383 U.S. at 17-18.

A claimed invention is obvious when a skilled artisan would have been motivated to combine the teaching of the prior art references to achieve the claimed invention, and the skilled artesian would have had a reasonable expectation of success in doing so. *See, e.g., Unigene Labs., Inc. v. Apotex, Inc.*, 655 F.3d 1352, 1360 (Fed. Cir. 2011). "Any need or problem known in the field of endeavor at the time of the invention and addressed by the patent can provide a reason for combining the elements in the manner claimed." *See KSR Int'l Co. v. Teleflex Inc.*, 550 U.S. 398, 420 (2007). While an analysis of any teaching, suggestion, or motivation to combine elements from different prior art references is useful in an obviousness analysis, such analyses should not be rigidly applied; the overall inquiry must be expansive and flexible, and must include the common sense and ordinary creativity of a person having ordinary skill in the art as part of the analysis. *Id.* at 419-21.

Pursuant to P.R. 3-3(b), Defendant identifies in Appendix A and in the sections below the prior art references that render obvious under 35 U.S.C. §103(a) the Asserted Claims of the '025

patent and include an identification of combinations showing the obviousness of the Asserted Claims in view of the prior art. Moreover, to the extent ACT contends that an element is not disclosed in any one of the references identified in Appendix A, such reference may be combined with one or more of the other references identified in Appendix A and/or the admitted prior art for such element, thereby rendering the claim invalid as obvious. Defendant may combine any prior art reference identified for the ’025 patent with any other prior art reference identified for the ’025 patent to assert obviousness. Even if a prior art reference does not expressly disclose all limitations as arranged or combined in the same manner as an asserted claim, a skilled artisan reading the reference would at once envisage the claimed arrangement or combination. *See, e.g.*, *Kennametal Inc. v. Ingersoll Cutting Tool Co.*, 780 F.3d 1376 (Fed. Cir. 2015).

To the extent a finder of fact determines that a limitation of any of the Asserted Claims of the ’025 patent is not disclosed by one of the references or products and systems identified above pursuant to P.R. 3-3(a), the claims are nevertheless unpatentable as obvious because they contain nothing that constitutes patentable innovation. To the extent a finder of fact determines that a limitation of any of the Asserted Claims of the ’025 patent is not anticipated, no asserted claim goes beyond combining familiar elements according to known methods to achieve predictable results or does more than choose between clear alternatives known to those of ordinary skill in the art.

b) Teaching, Suggestion, or Motivation to Combine References

The U.S. Supreme Court decision in *KSR International Co. v. Teleflex Inc.*, 127 S. Ct. 1727, 1739 (2007) (“*KSR*”) held that a claimed invention can be obvious even if there is no explicit, written teaching, suggestion, or motivation for combining the prior art to produce that invention. Accordingly, no showing of a specific motivation to combine prior art is required to combine the references disclosed in the attached charts, as each combination of art would have no unexpected

results, and, at most, would simply represent a known alternative to one of ordinary skill in the art. *See KSR*, 127 S. Ct. at 1739-40 (rejecting the Federal Circuit's "rigid" application of the teaching, suggestion, or motivation to combine test, and instead espousing an "expansive and flexible" approach). A person of ordinary skill in the art is "a person of ordinary creativity, not an automaton" and "in many cases a person of ordinary skill in the art will be able to fit the teachings of multiple patents together like pieces of a puzzle." *Id.* at 1742. "In determining whether the subject matter of a patent claim is obvious, neither the particular motivation nor the avowed purpose of the patentee controls. What matters is the objective reach of the claim." *Id.* at 1741-42. "Under the correct analysis, any need or problem known in the field of endeavor at the time of invention and addressed by the patent can provide a reason for combining the elements in the manner claimed." *Id.* at 1742. In particular, the Supreme Court emphasized the principle that "[t]he combination of familiar elements according to known methods is likely to be obvious when it does no more than yield predictable results." *Id.* at 1739. A key inquiry is whether the "improvement is more than the predictable use of prior art elements according to their established functions." *Id.* at 1740.

"Additionally, 'universal' motivations known in a particular field to improve technology provide 'a motivation to combine prior art references *even absent any hint of suggestion* in the references themselves.'" *Intel Corp. v. PACT XPP Schweiz AG*, 61 F.4th 1373, 1379 (Fed. Cir. 2023) (quoting *Intel Corp. v. Qualcomm Inc.*, 21 F.4th 784, 797-99 (Fed. Cir. 2021)) (original emphasis). Thus, motivations to combine, as well as the general state of the art, may be found in a variety of places including, but not limited to, in the references defined above, and the specification of the Asserted Patents.

The rationale to combine or modify prior art references is significantly stronger when the references seek to solve the same problem, come from the same field, and correspond well. *In re Inland Steel Co.*, 265 F.3d 1354, 1362 (Fed. Cir. 2001). The Federal Circuit allowed two references to be combined as invalidating art when "[the prior art] focus[es] on the same problem that the . . . patent addresses . . . Moreover, both [prior art references] come from the same field . . . Finally, the solutions to the identified problems found in the two references correspond well." *Id.* at 1362.

In *KSR*, the Supreme Court emphasized that inventions arising from ordinary innovation, ordinary skill, or common sense should not be patentable. *See KSR Int'l Co. v. Teleflex Inc.*, 550 U.S. 398 (2007). Although a patent challenger is not required to show that one of ordinary skill in the art would have had a specific motivation to combine prior art references, such a showing may be helpful to the obviousness analysis. *Id.* at 418; *see also id.* at 402. Exemplary rationales that may support a conclusion of obviousness include:

- Combining various claimed elements known in the prior art according to known methods to yield a predictable result;
- Making a simple substitution of one or more known elements for another to obtain a predictable result;
- Using a known technique to improve a similar device or method in the same way;
- Applying a known technique to a known device or method ready for improvement to yield a predictable result;
- Choosing from a finite number of identified, predictable solutions with a reasonable expectation of success, such that the solution was one which was "obvious to try";
- A known work in one field of endeavor prompting variations of it for use either in the same field or a different field based on design incentives or other market forces in which the variations were predictable to one of ordinary skill in the art; and
- A teaching, suggestion, or motivation in the prior art that would have led one of ordinary skill in the art to modify the prior art reference or to combine the teachings of various prior art references to arrive at the claimed invention.

Although Defendant contends that no specific motivation to combine is necessary for the references cited in the attached exhibits, consistent with the Patent Rules, Defendant hereby identifies additional motivations and reasons to combine the cited art. These exemplary discussions regarding obviousness are illustrative, and not intended to be exhaustive. To the extent ACT challenges a combination of prior art with respect to a particular element, Defendant reserves all rights to supplement these Contentions to further specify the motivation to combine the prior art. Defendant may rely on cited or uncited portions of the prior art, other documents, and/or expert testimony to establish that a person of ordinary skill in the art would have been motivated to modify or combine the prior art so as to render the claims invalid as obvious.

First, one of skill in the art would have been motivated to combine one or more of: (i) the admitted prior art; and/or (ii) the references identified in Appendix A, with one another, because they all relate to common objectives and subject matter. The references share commonalities in terms of their general subject matter, as well as the types of equipment, products, and/or approaches they describe. Moreover, a person of ordinary skill would have been motivated to combine the above prior art based on the nature of the problem to be solved, the teachings of the prior art, and the knowledge of persons of ordinary skill in the art. The identified prior art addresses the same or similar technical issues and suggests the same or similar solutions to those issues. To the extent ACT challenges a combination of prior art with respect to a particular element, Defendant may supplement these contentions to further specify the motivation to combine the prior art. Defendant may rely on cited or uncited portions of the prior art, other documents, and/or expert testimony to establish that a person of ordinary skill in the art would have been motivated to modify or combine the prior art so as to render the claims invalid as obvious. For example, each of the following relate to the same technical issues: encoding and decoding of videos: *see, e.g.*, Al-Mualla

at Title ("Video Coding for Mobile Communications"), Ahmad at 860 ("video coding"), H.263 at Title ("Coding of moving video"), H.264 at Title (same). MPEG-4 at Title ("Coding of audio-visual objects"), Jung 768 at [0001] ("video encoding system"), Kim 700 at Title ("Motion Picture Decoder"), Lee 982 at Title ("Image Encoding and Decoding"), Maeda at Abstract ("encoding"), Miyamoto at Title ("Method for Coding and/or Decoding"), Sekiguchi at Title ("Image Encoder, Image Decoder"), Woods at Title ("Video Coders"), Lee 725 at Title ("Video Encoding System"), Jung 207 at Title ("Image Encoding System"), Tian at Title ("Video Encoding"), Takenaka at Title ("Coding Apparatus"), Usubuchi at Title ("Encoding and/or Decoding Apparatus"), Henot at 5:6-9 ("encoding method"), Chujoh at Title ("Video Encoding/Decoding Method"), Lee 896 at [0005] ("motion picture compression"), Kondo-533 at Title ("Moving Picture Coding Method, and Moving Picture Decoding Method"), Woods-652 at Title ("Method and Apparatus for Scalable Motion Vector Coding").

Second, a person of ordinary skill in the art would have understood that the references identified in Appendix A explicitly or implicitly reference other prior art that share common authors or inventors, were published in the same journals, presented at the same conferences, were presented as proposals to standards working groups, and/or were developed at common companies, schools, or organizations, all of which would motivate one of skill in the art to combine them. Design incentives and other market forces would have prompted those combinations and modifications. "When there is a design or market pressure to solve a problem and there are a finite number of identified, predictable solutions, a person of ordinary skill has good reason to pursue known options within his or her technical grasp." *KSR Int'l, 127 S. Ct.* at 1742. Moreover, some pieces of prior art refer to or discuss other pieces of prior art, illustrating the close technical relationship among the prior art. To the extent any piece of prior art refers to or discusses other

pieces of prior art, either expressly or inherently, it would have been obvious to combine those pieces of prior art for that reason. For example, the ’025 patent describes the existence of standardized “coding methods,” including the MPEG-4 and H.264 references. Likewise, Tian at [0012]-[0013] (MPEG-4 and H.264), Lee 725 at 2 (same) also reference these same standards. *See also* Lee 896 at [0005] (“MPEG”), Al-Mulla at 43-89 (H.263 and MPEG-4), Maeda at 2:32-42 (same), Lee 982 at [0005] (same), Chujoh at [0006] (same), Ahmad at 860 (same); Shirani at 1122 (H.263), Kondo-533 at 3:13-18 (same). It would have been obvious to combine any of the references in Appendix A and the admitted prior art with these established standards as each was intended to improve or build upon these standards. Further, to the extent that any reference discusses standardized coding methods, those references would have been compatible with each other for the same reason. For example, Shirani describes that its methods are “general” and “can be applied to any block-based video compression method.”

Third, the references identified in Appendix A and the admitted prior art are also directed to similar subject matter within that field. Additionally, any products, devices, or processes described in the references existed and/or were invented before or during the period in which the claimed inventions were developed, providing further motivation to combine them. For example, each of the following relate to video encoders and decoders around April 17, 2006: *see, e.g.*, Al-Mualla at Title (“Video Coding for Mobile Communications”), Ahmad at 860 (“video coding”), H.263 at Title (“Coding of moving video”), H.264 at Title (same). MPEG-4 at Title (“Coding of audio-visual objects”), Jung 768 at [0001] (“video encoding system”), Kim 700 at Title (“Motion Picture Decoder”), Lee 982 at Title (“Image Encoding and Decoding”), Maeda at Abstract (“encoding”), Miyamoto at Title (“Method for Coding and/or Decoding”), Sekiguchi at Title (“Image Encoder, Image Decoder”), Woods at Title (“Video Coders”), Lee 725 at Title

("Video Encoding System"), Jung 207 at Title ("Image Encoding System"), Tian at Title ("Video Encoding"), Takenaka at Title ("Coding Apparatus"), Usubuchi at Title ("Encoding and/or Decoding Apparatus"), Henot at 5:6-9 ("encoding method"), Chujoh at Title ("Video Encoding/Decoding Method"), Lee 896 at [0005] ("motion picture compression"), Kondo-533 at Title ("Moving Picture Coding Method, and Moving Picture Decoding Method"), Woods-652 at Title ("Method and Apparatus for Scalable Motion Vector Coding").

Fourth, one or more combinations of the admitted prior art and prior art references identified in Appendix A, pursuant to P.R. 3-3(b), would have been obvious because these references would have been combined with one another using: known methods to yield predictable results; known techniques in the same way; a simple substitution of one known, equivalent element for another to obtain predictable results; and/or a teaching, suggestion, or motivation in the prior art generally. The Asserted Claims are obvious, in part, because they merely arrange old elements, with each performing the same function that had been known, to perform and yield no more than what one of ordinary skill would expect from such an arrangement. Because there were a finite number of predictable solutions in the art of delivering content in response to a request, it would have been obvious to a person of ordinary skill in the art to pursue the known options. The identified prior art references merely use those familiar elements for their primary or well-known purposes and in a manner well within the ordinary level of skill in the art. Accordingly, common sense and the knowledge of the prior art render the Asserted Claims invalid as well.

For example, the '025 patent's Background section admits that the prior art included standardized "coding methods," including MPEG-4 AVC and H.264. '025 patent at 1:18-34. The Background also admits the prior art comprised encoding and decoding generally, as well as "Motion Compensation," "Discrete Cosine Transform," "block[s]," "motion-vector data,"

[redacted]

"discontinuity on a block border and mismatching of texture data in block," generating "predictive pictures" and "residual[s]," "entropy coding," and "orthogonal transform, quantization, etc.". '025 patent at 1:18-2:26. In addition, it would have been obvious to try combining the prior art references identified above because there were only a finite number of predictable solutions and/or because known work in one field of endeavor prompted variations based on predictable design incentives and/or market forces either in the same field or a different one. For example, there are a finite number of approaches for encoding and decoding media using motion compensation. For example, as of the priority date of the '025 patent, a POSA would have been very familiar with basic elements of the '025 Patent's claims such as demultiplexing coded data, entropy decoding, inverse quantization, inverse-orthogonal transformation, motion compensation techniques. '025 patent at 1:18-2:26. Furthermore, there were only a finite number of ways for smoothing discontinuities at block borders. It would have been obvious to a POSA to try defining conditions that satisfy Poisson's equation. *See*, *e.g.*, Saito, Yamitani, and Shen. In addition, the combination of prior art references identified above would have been obvious because the combinations represent known potential options with a reasonable expectation of success.

Fifth, additional evidence that there would have been a motivation to combine the prior art references identified in Appendix A and/or the admitted prior art, includes, for example, the interrelated teachings of multiple prior art references; the effects of demands known to the design community or present in the marketplace; the existence of a known problem for which there was an obvious solution encompassed by the Asserted Claims; the existence of a known need or problem in the field of the endeavor at the time of the invention(s); and the background knowledge that would have been possessed by a person having ordinary skill in the art. For example, prior to the alleged priority date of the Asserted Patents, it was well-known that OBMC could be used to

remove discontinuities at block borders. *See, e.g.*, Sekiguchi at [0017], Lee 896 at [0003], Woods at Abstract, Watanabe at Abstract, Nogaki at Abstract, Orchard at Abstract, Kuo at Abstract, Akramullah at 903, Rajagopalon at Abstract, Pschernig at Abstract, H.263 at Annex F, H.264, Woods-652 at [0142]-[0214]. A skilled artisan seeking, for example, to solve this problem would have sought to use OBMC, including as disclosed in the prior art. In addition, using a selector was a well-known method for selecting predictive pictures, and a POSA would have looked to using such a selector, including as disclosed in the prior art, when the system provides alternative predictive pictures. *See, e.g.*, Lee 896, Takenaka, Usubuchi, Henot, Kondo-533.

Sixth, a person of ordinary skill at the time of the alleged invention had reason to combine or modify one or more of the references identified in Appendix A and/or the admitted prior art, with other prior art references in Appendix A and/or the admitted prior art, in light of the knowledge of a person of ordinary skill in the art at the time of the invention and information in the prior art cited herein. For example, the references in Appendix A and the admitted prior art all generally relate to encoding and decoding of videos. Thus, they are all directed to features within the same field and one of ordinary skill in the art at the time of the alleged invention would have been motivated to look to these teachings in the field and combine any of these known technologies. *See, e.g.*, Al-Mualla at Title ("Video Coding for Mobile Communications"), Ahmad at 860 ("video coding"), H.263 at Title ("Coding of moving video"), H.264 at Title (same). MPEG-4 at Title ("Coding of audio-visual objects"), Jung 768 at [0001] ("video encoding system"), Kim 700 at Title ("Motion Picture Decoder"), Lee 982 at Title ("Image Encoding and Decoding"), Maeda at Abstract ("encoding"), Miyamoto at Title ("Method for Coding and/or Decoding"), Sekiguchi at Title ("Image Encoder, Image Decoder"), Woods at Title ("Video Coders"), Lee 725 at Title ("Video Encoding System"), Jung 207 at Title ("Image Encoding

System"), Tian at Title ("Video Encoding"), Takenaka at Title ("Coding Apparatus"), Usubuchi at Title ("Encoding and/or Decoding Apparatus"), Henot at 5:6-9 ("encoding method"), Chujoh at Title ("Video Encoding/Decoding Method"), Lee 896 at [0005] ("motion picture compression"), Kondo-533 at Title ("Moving Picture Coding Method, and Moving Picture Decoding Method"), Woods-652 at Title ("Method and Apparatus for Scalable Motion Vector Coding").

Seventh, many of the references in Appendix A and/or the admitted prior art, have common design features, such as the aforementioned encoders and decoders, multiplexers, demultiplexers, motion estimators, motion compensators, combiners, subtractors, orthogonal transformers, quantizers, inverse-quantizers, inverse orthogonal transformers and selectors. '025 patent at 1:18-2:26. In addition, many of the references take the same approach to solve the issue of block discontinuities: OBMC. *See, e.g.*, Sekiguchi, Lee 896, Woods, Watanabe, Nogaki, Orchard, Averbuch, Braverman, Kuo, Akramullah, Rajagopalon, Pschernig, H.263, H.264, Woods-652. One of ordinary skill in the art would have been motivated and found it obvious to combine these references, with a reasonable expectation of success, because they not only share identical components, but they also take the same approach.

In addition to the exemplary motivations, suggestions, or reasons to combine described above, Defendant identifies additional obviousness combinations and motivations to combine in the sections below. The exemplary motivations, suggestions, or reasons to combine described above and below are not exclusive or exhaustive, and should not be interpreted as indicating that any Asserted Claim is not already anticipated under 35 U.S.C. § 102. Defendant may identify further examples as the case proceeds. In addition, Defendant provides additional reasons to combine various disclosures below.

(i) "boundary condition" claim terms

Independent claims 1, 4, 6, 7, 9, and 10 of the ’025 patent and their corresponding dependent claims recite limitations directed to obtaining and defining a boundary condition for a block border, and using that boundary condition to generate an estimated video signal (collectively, “Boundary Condition Limitations”).

The ’025 patent itself admits that OBMC was well known in the art. Specifically, in the Background section, the ’025 patent cites to WO 2003/003749, a relative of the Sekiguchi reference, and credits it as already having taught a “method to remedy the discontinuous situation on an MC-block border,” which is same problem as what the ’025 patent purports to solve. Sekiguchi teaches and uses the method of overlapped motion compensation (OBMC), which was well known in the art at the time the application leading to the ’025 patent was filed. Other references that describe OBMC, prior to the filing of the ’025 patent, include Sekiguchi, Lee 896, Woods, Watanabe, Nogaki, Orchard, Averbuch, Braverman, Kuo, Akramullah, Rajagopalon, Pschernig, Zhao, H.263, H.264, and Woods-652. Likewise, Shirani also describes alternative methods that also use block border matching.

To the extent ACT contends that the admitted prior art or any of the references identified in Appendix A do not disclose the Boundary Condition Limitations, a person of ordinary skill in the art would have arrived at the purported invention based on the background knowledge, and/or one or more of the prior art references identified in the charts and/or attached as Exhibits. For example, it was well-known that OBMC was used to address discontinuities at block borders. *See*, *e.g.*, Sekiguchi, Watanabe, Lee 896, Lee 725, Woods, H.263, H.264, Nogaki, Orchard, Kuo, Akramullah, Rajagopalon, Pschernig, Shirani, Woods-652.

A POSA was motivated to combine obtaining and defining a boundary condition for a block border, and using that boundary condition to generate an estimated video signal with any

encoding or decoding system as disclosed in, *e.g.*, Jung 207, Miyamoto, Kim 700, Maeda, Sekiguchi, Chujoh, Woods, Lee 982, Tian, Jung 768, Lee 725, Al-Mualla, Ahmad, H.263, H.264 MPEG-4 and Woods-652. For example, the importance of removing or avoiding discontinuities at block boundaries was well-known. *See, e.g.*, Sekiguchi at 15 ("when coding is carried out with a high compression ratio, a satisfactory rendition of the residual signal is not possible and the discontinuous boundaries are sometimes apparent and perceived as distortion"); Lee 896 at [0009] ("The occurrence of block artifacts is a phenomenon that boarders[sic] between adjacent blocks that look discontinuous in the restored frame or field, resulting in a visually inferior image and deterioration of image quality.").

A POSA would have thus had a reasonable expectation of success in combining because these methods were known solutions for boundary discontinuities. For example, as discussed, there were well-known techniques to estimate signals and/or motion between boundaries to address the issue of block discontinuities. *See, e.g.*, Saito at 4 ("Want to improve the quality of images (*e.g.*, less blocking artifacts / visible discontinuities between blocks) reconstructed from the low bit rate JPEG files."), Lee 725 at 60 ("the present invention performs motion determination on a block-by-block basis during inter-screen encoding of a video, but does not obtain a motion vector as in the prior art, but only determines motion using pixel values at block boundaries, thereby obtaining a motion vector"); Abstract, 26, 28, 31, 49.

Indeed, OBMC was used in the H.263 and H.264 standards and Shirani specifically teaches that its methods "can be applied to any block-based video compression method."

(ii) "Poisson's Equation" claim terms

Independent claims 1, 4, 6, 7, 9, and 10 of the '025 patent and their corresponding dependent claims also recite limitations specifying that the estimated video signal satisfies Poisson's Equation (collectively, "Poisson's Equation Limitations").

The ’025 patent itself admits that it was well known that Polyharmonic Cosine Transform (PHLCT) could be used with Poisson’s Equation to generate an estimated video signal, citing Yamitani. ’025 patent at 11:39-55 (“FIG. 17 is an illustration of a basic concept of PHLCT. PHLCT is a scheme to enhance DCT coding efficiency used for example in JPEG, as discussed in ‘Improvement of DCT-based Compression Algorithms Using Poisson’s Equation.’ [Yamitani]”).

To the extent ACT contends that the admitted prior art or any of the references identified in Appendix A do not disclose the Poisson’s Equation Limitations, a person of ordinary skill in the art would have arrived at the purported invention based on the background knowledge, and/or one or more of the prior art references identified in the charts and/or attached as Exhibits. *See*, *e.g.*, Saito, Yamitani, Averbuch, Braverman, Shen, and Zhao.

A POSA was motivated to combine generating an estimated video signal that satisfies Poisson’s Equation with any encoding or decoding system that obtains and defines a boundary condition for a block border as disclosed in, *e.g.*, Sekiguchi, Watanabe, Lee 896, Lee 725, Woods, H.263, H.264, Nogaki, Orchard, Kuo, Akramullah, Rajagopalon, Pschernig, Shirani, and Woods-652. For example, a POSA would have been motivated to combine the teachings of these references because the prior art recognizes the importance of removing or avoiding discontinuities at block boundaries, *e.g.*, Sekiguchi at 15 (“when coding is carried out with a high compression ratio, a satisfactory rendition of the residual signal is not possible and the discontinuous boundaries are sometimes apparent and perceived as distortion”); Lee 896 at [0009] (“The occurrence of block artifacts is a phenomenon that boarders[sic] between adjacent blocks that look discontinuous in the restored frame or field, resulting in a visually inferior image and deterioration of image quality.”).

And for example, the Yamatani, Saito, Lee 725, Al-Mualla, and Shirani references teach known techniques to estimate signals and/or motion between boundaries, *e.g.*, Saito at 4 ("Want to improve the quality of images (*e.g.*, less blocking artifacts / visible discontinuities between blocks) reconstructed from the low bit rate JPEG files."), Lee 725 at 60 ("the present invention performs motion determination on a block-by-block basis during inter-screen encoding of a video, but does not obtain a motion vector as in the prior art, but only determines motion using pixel values at block boundaries, thereby obtaining a motion vector"); *id.* at Abstract, ¶¶ 26, 28, 31, 49. Thus, a POSA would have thus had a reasonable expectation of success in combining these references because applying Posisson's equation to address block discontinuities was well known and involved nothing more than combining various claimed elements known in the prior art according to known methods to yield a predictable result.

(iii) Coder Component claim terms

Independent claims 1, 4, 6, 7, 9, and 10 of the '025 patent and their corresponding dependent claims also recite limitations relating to standard coder components and methods (*e.g.*, "encoder"/"decoder," "multiplexer"/"demultiplexer," "motion estimator," "motion compensator," "subtractor"/"combiner," "orthogonal transformer," "quantizer," "inverse-quantizer," "inverse-orthogonal transformer," "entropy encoder"/"entropy decoder," "rectangular zones," etc.) (collectively, "Coder Component Limitations").

As acknowledged by the '025 patent, the function and use of each of these components for encoding and decoding was well-known. '025 patent at 1:18-2:26 (describing the prior art). Further MPEG-4, H.263, and H.264 describe this well-known codec functionality used for encoding and decoding a bitstream, and a POSA would have been motivated to combine the teachings of these references. The combination would apply known techniques in order to yield predictable results. To the extent ACT contends that the admitted prior art or any of the references identified in

Appendix A do not disclose the Coder Component Limitations, a person of ordinary skill in the art would have arrived at the purported invention based on the background knowledge, and/or one or more of the prior art references identified in the charts and/or attached as Exhibits. *See, e.g.*, Jung 207, Miyamoto, Kim 700, Maeda, Sekiguchi, Chujoh, Woods, Lee 982, Tian, Jung 768, Lee 725, Al-Mualla, Ahmad, H.263, H.264, MPEG-4, Kondo-533, Woods-652 .

A POSA was motivated to combine these components with any encoding or decoding system. Indeed, a POSA would have had a reasonable expectation of success in doing so because each component was well known and involved nothing more than combining various claimed elements known in the prior art according to known methods to yield a predictable result.

(iv) "selector" claim terms

Claims 6 and 8 of the '025 patent recite limitations directed to a "selector" for selecting between a first predictive picture generated by zone-border motion compensation and a second predictive picture generated by motion compensation (collectively, "Selector Limitations"). To the extent ACT contends that the admitted prior art or any of the references identified in Appendix A do not disclose the Selector Limitations, a person of ordinary skill in the art would have arrived at the purported invention based on the background knowledge, and/or one or more of the prior art references identified in the charts and/or attached as Exhibits. *See, e.g.* Takenaka, Usubuchi, Henot, Kondo-533.

A POSA was motivated to combine a selector for selecting between a first predictive picture generated by zone-border motion compensation and a second predictive picture generated by motion compensation with any encoding or decoding system as disclosed in, *e.g.*, Al-Mualla, Ahmad, H.263, H.264. MPEG-4, Jung 768, Kim 700, Lee 982, Maeda, Miyamoto, Sekiguchi, Woods, Lee 725, Jung 207, Tian, and Woods-652. Indeed, a POSA would have had a reasonable expectation of success in combining a selector with any encoding or decoding system because such

a selector was well known and involved nothing more than combining various claimed elements known in the prior art according to known methods to yield a predictable result.

c) Additional Combinations

For at least the reasons described above, it would have been obvious to one of ordinary skill in the art to combine each prior art reference listed in Appendix A with any other reference or references listed in Appendix A along with the knowledge of one of ordinary skill in the art to arrive at the inventions claims in the '025 patent.[6] For example, and without limitation, the Asserted Claims of the '025 patent would have been obvious to one of ordinary skill in the art in view of the following combinations:

Table 4-A: Additional Combinations for the '025 Patent

Patent No. or Title (Primary Inventor/Author)	In Combination with One or More of: (Patent No. or Title (Primary Inventor/Author))
Al-Mualla	• Shirani • Watanabe • Lee 896 • Woods • H.263 • H.264 • Nogaki • Orchard • Averbuch • Braverman • Kuo • Akramullah • Rajagopalon • Pschernig • Saito • Yamitani • Shen

[6] Further, Defendant is actively searching for information regarding at least the systems, devices, and/or inventions listed above in Table 3-A. It would have been obvious to one of ordinary skill in the art to combine each of the prior art references listed in Appendix A with any of the systems identified in Table 3-A. Defendant reserves the right to supplement or amend these contentions as discovery progresses, to the extent permitted by the Court.

	• Takenaka • Usubuchi • Henot • Ahmad • MPEG-4 • Jung 768 • Kim 700 • Lee 982 • Maeda • Miyamoto • Sekiguchi • Lee 725 • Jung 207 • Tian • Chujoh • Kondo-533 • Woods-652 • The knowledge of a person of ordinary skill in the art. • Any system implementing H.263 can be also combined with any other system implementing H.263 in addition to the standard itself and any publications describing H.263. • Any system implementing H.264 can be also combined with any other system implementing H.264 in addition to the standard itself and any publications describing H.264. • Any system implementing MPEG-4 can be also combined with any other system implementing MPEG-4 in addition to the standard itself and any publications describing MPEG-4.
H.263	• Al-Mualla • Shirani • Watanabe • Lee 896 • Woods • H.264 • Nogaki • Orchard • Averbuch • Braverman

	• Kuo • Akramullah • Rajagopalon • Pschernig • Saito • Yamitani • Shen • Takenaka • Usubuchi • Henot • Ahmad • MPEG-4 • Jung 768 • Kim 700 • Lee 982 • Maeda • Miyamoto • Sekiguchi • Lee 725 • Jung 207 • Tian • Chujoh • Kondo-533 • Woods-652 • The knowledge of a person of ordinary skill in the art. • Any system implementing H.263 can be also combined with any other system implementing H.263 in addition to the standard itself and any publications describing H.263.
Shirani	• Al-Mualla • Watanabe • Lee 896 • Woods • H.263 • H.264 • Nogaki • Orchard • Averbuch • Braverman • Kuo • Akramullah • Rajagopalon

	• Pschernig • Saito • Yamitani • Shen • Takenaka • Usubuchi • Henot • Ahmad • MPEG-4 • Jung 768 • Kim 700 • Lee 982 • Maeda • Miyamoto • Sekiguchi • Lee 725 • Jung 207 • Tian • Chujoh • Kondo-533 • Woods-652 • The knowledge of a person of ordinary skill in the art. • Any system implementing H.263 can be also combined with any other system implementing H.263 in addition to the standard itself and any publications describing H.263.
Systems Implementing H.263	• Al-Mualla • Shirani • Watanabe • Lee 896 • Woods • H.263 • H.264 • Nogaki • Orchard • Averbuch • Braverman • Kuo • Akramullah • Rajagopalon • Pschernig • Saito

	• Yamitani • Shen • Takenaka • Usubuchi • Henot • Ahmad • MPEG-4 • Jung 768 • Kim 700 • Lee 982 • Maeda • Miyamoto • Sekiguchi • Lee 725 • Jung 207 • Tian • Chujoh • Kondo-533 • Woods-652 • The knowledge of a person of ordinary skill in the art. • Any system implementing H.263 can be also combined with any other system implementing H.263 in addition to the standard itself and any publications describing H.263.
Systems Implementing H.264	• Al-Mualla • Shirani • Watanabe • Lee 896 • Woods • H.263 • H.264 • Nogaki • Orchard • Averbuch • Braverman • Kuo • Akramullah • Rajagopalon • Pschernig • Saito • Yamitani • Shen

	• Takenaka • Usubuchi • Henot • Ahmad • MPEG-4 • Jung 768 • Kim 700 • Lee 982 • Maeda • Miyamoto • Sekiguchi • Lee 725 • Jung 207 • Tian • Chujoh • Kondo-533 • Woods-652 • The knowledge of a person of ordinary skill in the art. • Any system implementing H.264 can be also combined with any other system implementing H.263 in addition to the standard itself and any publications describing H.264.
CoreAVC	• Al-Mualla • Shirani • Watanabe • Lee 896 • Woods • H.263 • H.264 • Nogaki • Orchard • Averbuch • Braverman • Kuo • Akramullah • Rajagopalon • Pschernig • Saito • Yamitani • Shen • Takenaka • Usubuchi

	• Henot • Ahmad • MPEG-4 • Jung 768 • Kim 700 • Lee 982 • Maeda • Miyamoto • Sekiguchi • Lee 725 • Jung 207 • Tian • Chujoh • Kondo-533 • Woods-652 • The knowledge of a person of ordinary skill in the art. • Any system implementing H.264 can be also combined with any other system implementing H.263 in addition to the standard itself and any publications describing H.264.
FFmpeg	• Al-Mualla • Shirani • Watanabe • Lee 896 • Woods • H.263 • H.264 • Nogaki • Orchard • Averbuch • Braverman • Kuo • Akramullah • Rajagopalon • Pschernig • Saito • Yamitani • Shen • Takenaka • Usubuchi • Henot • Ahmad

	• MPEG-4 • Jung 768 • Kim 700 • Lee 982 • Maeda • Miyamoto • Sekiguchi • Lee 725 • Jung 207 • Tian • Chujoh • Kondo-533 • Woods-652 • The knowledge of a person of ordinary skill in the art. • Any system implementing H.263 can be also combined with any other system implementing H.263 in addition to the standard itself and any publications describing H.263. • Any system implementing H.264 can be also combined with any other system implementing H.263 in addition to the standard itself and any publications describing H.264.
Helix	• Al-Mualla • Shirani • Watanabe • Lee 896 • Woods • H.263 • H.264 • Nogaki • Orchard • Averbuch • Braverman • Kuo • Akramullah • Rajagopalon • Pschernig • Saito • Yamitani • Shen • Takenaka

	• Usubuchi • Henot • Ahmad • MPEG-4 • Jung 768 • Kim 700 • Lee 982 • Maeda • Miyamoto • Sekiguchi • Lee 725 • Jung 207 • Tian • Chujoh • Kondo-533 • Woods-652 • The knowledge of a person of ordinary skill in the art. • Any system implementing H.263 can be also combined with any other system implementing H.263 in addition to the standard itself and any publications describing H.263. • Any system implementing H.264 can be also combined with any other system implementing H.263 in addition to the standard itself and any publications describing H.264.
HRD	• Al-Mualla • Shirani • Watanabe • Lee 896 • Woods • H.263 • H.264 • Nogaki • Orchard • Averbuch • Braverman • Kuo • Akramullah • Rajagopalon • Pschernig • Saito

	• Yamitani • Shen • Takenaka • Usubuchi • Henot • Ahmad • MPEG-4 • Jung 768 • Kim 700 • Lee 982 • Maeda • Miyamoto • Sekiguchi • Lee 725 • Jung 207 • Tian • Chujoh • Kondo-533 • Woods-652 • The knowledge of a person of ordinary skill in the art. • Any system implementing H.264 can be also combined with any other system implementing H.263 in addition to the standard itself and any publications describing H.264.
MSM7200	• Al-Mualla • Shirani • Watanabe • Lee 896 • Woods • H.263 • H.264 • Nogaki • Orchard • Averbuch • Braverman • Kuo • Akramullah • Rajagopalon • Pschernig • Saito • Yamitani • Shen

	• Takenaka • Usubuchi • Henot • Ahmad • MPEG-4 • Jung 768 • Kim 700 • Lee 982 • Maeda • Miyamoto • Sekiguchi • Lee 725 • Jung 207 • Tian • Chujoh • Kondo-533 • Woods-652 • The knowledge of a person of ordinary skill in the art. • Any system implementing H.263 can be also combined with any other system implementing H.263 in addition to the standard itself and any publications describing H.263. • Any system implementing H.264 can be also combined with any other system implementing H.263 in addition to the standard itself and any publications describing H.264.
Quicktime	• Al-Mualla • Shirani • Watanabe • Lee 896 • Woods • H.263 • H.264 • Nogaki • Orchard • Averbuch • Braverman • Kuo • Akramullah • Rajagopalon • Pschernig

	• Saito • Yamitani • Shen • Takenaka • Usubuchi • Henot • Ahmad • MPEG-4 • Jung 768 • Kim 700 • Lee 982 • Maeda • Miyamoto • Sekiguchi • Lee 725 • Jung 207 • Tian • Chujoh • Kondo-533 • Woods-652 • The knowledge of a person of ordinary skill in the art. • Any system implementing H.263 can be also combined with any other system implementing H.263 in addition to the standard itself and any publications describing H.263. • Any system implementing H.264 can be also combined with any other system implementing H.263 in addition to the standard itself and any publications describing H.264.
VLC Media Player	• Al-Mualla • Shirani • Watanabe • Lee 896 • Woods • H.263 • H.264 • Nogaki • Orchard • Averbuch • Braverman • Kuo

	• Akramullah • Rajagopalon • Pschernig • Saito • Yamitani • Shen • Takenaka • Usubuchi • Henot • Ahmad • MPEG-4 • Jung 768 • Kim 700 • Lee 982 • Maeda • Miyamoto • Sekiguchi • Lee 725 • Jung 207 • Tian • Chujoh • Kondo-533 • Woods-652 • The knowledge of a person of ordinary skill in the art. • Any system implementing H.263 can be also combined with any other system implementing H.263 in addition to the standard itself and any publications describing H.263. • Any system implementing H.264 can be also combined with any other system implementing H.263 in addition to the standard itself and any publications describing H.264.
x264	• Al-Mualla • Shirani • Watanabe • Lee 896 • Woods • H.263 • H.264 • Nogaki • Orchard

	• Averbuch • Braverman • Kuo • Akramullah • Rajagopalon • Pschernig • Saito • Yamitani • Shen • Takenaka • Usubuchi • Henot • Ahmad • MPEG-4 • Jung 768 • Kim 700 • Lee 982 • Maeda • Miyamoto • Sekiguchi • Lee 725 • Jung 207 • Tian • Chujoh • Kondo-533 • Woods-652 • The knowledge of a person of ordinary skill in the art. • Any system implementing H.264 can be also combined with any other system implementing H.263 in addition to the standard itself and any publications describing H.264.
Woods-652	• Al-Mualla • Shirani • Watanabe • Lee 896 • Woods • H.263 • H.264 • Nogaki • Orchard • Averbuch • Braverman

	• Kuo • Akramullah • Rajagopalon • Pschernig • Saito • Yamitani • Shen • Takenaka • Usubuchi • Henot • Ahmad • MPEG-4 • Jung 768 • Kim 700 • Lee 982 • Maeda • Miyamoto • Sekiguchi • Lee 725 • Jung 207 • Tian • Chujoh • Kondo-533 • The knowledge of a person of ordinary skill in the art. • Any system implementing H.264 can be also combined with any other system implementing H.263 in addition to the standard itself and any publications describing H.264.

d) Secondary Considerations

Proving secondary considerations is ACT's burden. *See, e.g.*, *ZUP, LLC v. Nach Mfg., Inc.*, 896 F.3d 1365, 1373 (Fed. Cir. 2018) ("[A] patentee bears the burden of production with respect to evidence of secondary considerations of nonobviousness."). In interrogatory responses, ACT has purportedly provided evidence of (1) long felt but unresolved needs; (2) commercial success/industry praise; (3) copying; and (4) licensing. However, none of this purported evidence demonstrates nonobviousness. For example, ACT asserts that there was a long-felt need for

smoothing discontinuities between blocks; however, ACT itself acknowledges that "[s]everal methods were previously suggested." Further, as discussed in this Section, the use of OBMC had already solved the problem of discontinuities between blocks and was well-known in the prior art. *See, e.g.*, Sekiguchi, Watanabe, Lee 896, Lee 725, Woods, H.263, H.264, Nogaki, Orchard, Kuo, Akramullah, Rajagopalon, and Pschernig. Further, ACT has not shown any nexus between any alleged secondary considerations and the Asserted Claims for any purported commercial success or praise. *See Wyers v. Master Lock Co.*, 616 F.3d 1231, 1246 (Fed. Cir. 2010); *In re Kao*, 639 F.3d 1057, 1068-69, 98 USPQ2d 1799, 1808 (Fed. Cir. 2011) ("Where the offered secondary consideration actually results from something other than what is both claimed and novel in the claim, there is no nexus to the merits of the claimed invention."); *Tokai Corp. v. Easton Enters., Inc.*, 632 F.3d 1358, 1369 (Fed. Cir. 2011) ("If commercial success is due to an element in the prior art, no nexus exists."); *Ormco Corp. v. Align Technology, Inc.*, 463 F.3d 1299, 1312 (Fed. Cir. 2006) ("[I]f the feature that creates the commercial success was known in the prior art, the success is not pertinent."). ACT's purported evidence for commercial success or praise relates to AV1 generally or the use of the prior art method of OBMC specifically. ACT does not demonstrate that any purported commercial success or praise relates to novel claimed features of the '025 patent. Further, any purported praise for the use of S-Frames is unrelated to the '025 patent.

To date, ACT has provided no factual evidence demonstrating copying. Defendant thus reserves the right to supplement its contentions with respect to secondary considerations once ACT has adequately provided evidence for these claims.

"The fact of near-simultaneous invention, though not determinative of statutory obviousness, is strong evidence of what constitutes the level of ordinary skill in the art." *Ecolochem, Inc. v. S. Cal. Edison Co.*, 227 F.3d 1361, 1379 (Fed. Cir. 2000) (citing *The Int'l Glass*

Co. v. United States, 187 Ct. Cl. 376, 408 F.2d 395, 405 (1969)). "[T]he possibility of near simultaneous invention by two or more equally talented inventors working independently, . . . may [] be an indication of obviousness when considered in light of all the circumstances." *Id.* (citing *Lindeman Maschinenfabrik GmbH v. American Hoist & Derrick Co.*, 730 F.2d 1452, 1460 (Fed. Cir. 1984)); *see also George M. Martin Co. v. Alliance Mach. Sys. Int'l LLC*, 618 F.3d 1284, 1305 (Fed. Cir. 2010) ("Independently made, simultaneous inventions, made within a comparatively short space of time, are persuasive evidence that the claimed apparatus was the product only of ordinary mechanical or engineering skill."). To the extent that any of the references in these preliminary invalidity contentions is found not to be prior art to the respective Asserted Patents, these references may be relied upon as evidence of near-simultaneous invention favoring obviousness.

To the extent ACT introduces contentions and/or evidence concerning secondary considerations in the future, Defendant reserves all rights to rebut those contentions if and when ACT identifies them. In the meantime, Defendant contends that, in any event, the evidence of obviousness for each asserted claim is so overwhelming that secondary considerations are necessarily insufficient to rebut Defendant's showing. *See, e.g.*, *Ohio Willow Wood Co. v. Alps South, LLC*, 735 F.3d 1333, 1344 (Fed. Cir. 2013) ("[W]here a claimed invention represents no more than the predictable use of prior art elements according to established functions, as here, evidence of secondary indicia are frequently deemed inadequate to establish non-obviousness.").

6. 35 U.S.C. § 112 Invalidity Under P.R. 3–3(d)

Pursuant to P.R. 3–3(d), Defendant contends that the Asserted Claims of the '025 patent are invalid under 35 U.S.C. § 112 because the claims are indefinite, not enabled, or lack written description. Defendant's contentions that the following claims are invalid under 35 U.S.C. § 112 are made in the alternative and do not constitute, and should not be interpreted as, admissions

regarding the construction or scope of the claims of the ’025 patent, or that any of the claims of the ’025 patent are not anticipated or rendered obvious by prior art. The following contentions, made pursuant to P.R. 3–3(d), are subject to revision and amendment pursuant to P.R. 3–6 and Federal Rule of Civil Procedure 26(e) and the Orders of record in this matter to the extent appropriate, *e.g.*, in light of further investigation and discovery regarding the defenses, the Court’s construction of the claims at issue, and/or review and analysis of expert witnesses. Defendant offers these contentions in response to ACT’s Infringement Contentions and without prejudice to any position it may ultimately take as to any claim construction issues.

a) Indefiniteness under 35 U.S.C. § 112, Second Paragraph

35 U.S.C. § 112 includes a definiteness requirement. *See* 35 U.S.C. § 112, ¶ 2 (“[T]he specification shall conclude with one or more claims particularly pointing out and distinctly claiming the subject matter which the applicant regards as his invention.”). “[A] patent is invalid for indefiniteness if its claims, read in light of the specification delineating the patent, and the prosecution history, fail to inform, with reasonable certainty, those skilled in the art about the scope of the invention.” *Nautilus, Inc. v. Biosig Instruments, Inc.*, 134 S. Ct. 2120, 2124 (2014).

The Asserted Claims are invalid as indefinite under 35 U.S.C. § 112, second paragraph, for failing to particularly point out and distinctly claim the subject matter which the applicants regard as their invention. The specification of the ’025 patent provides no objective standard by which one of ordinary skill in the art could determine the meaning of the asserted claim elements. In particular, at least the following claim terms are indefinite because they fail to particularly point out and distinctly claim the subject matter which the applicants regarded as their alleged inventions.[7]

[7] Dependent claims are also invalid as being dependent upon a base claim that is indefinite under 35 U.S.C. § 112, second paragraph.

For example, Claims 1, 4, 6, 7, 9, and 10 and their dependent claims are invalid for indefiniteness as to the phrase "estimated video signal" because this term when read in light of the specification delineating the patent and the prosecution history, fail to inform, with reasonable certainty, those skilled in the art about the scope of the invention. For example, the limitation fails to inform a person of ordinary skill what constitutes an estimated video signal or how it is estimated from PHLCT. Further Claims 1, 4, 6, 7, 9, and 10 and their dependent claims are invalid for indefiniteness as to the phrase "that satisfies Poisson's Equation" because this term when read in light of the specification delineating the patent and the prosecution history, fail to inform, with reasonable certainty, those skilled in the art about the scope of the invention. For example, the limitation fails to inform a person of ordinary skill how Poisson's Equation would be "satisfied" by the estimated video signal, and whether determination of such requires solving Poisson's Equation.

The following limitations recited in the '025 patent Asserted Claims are indefinite in whole, in part or in combination, as summarized below:[8]

Table 5-A: Indefinite Terms under 35 U.S.C. § 112(2) the '025 Patent

Term	Relevant Claim(s)
a predictive encoder to produce and encode a residual picture that is a residual signal between a picture to be coded that is an input moving-picture video signal to be subjected to coding and a predictive picture produced from a reference picture that is a local decoded video signal for each of a plurality of rectangular zones, each composed of a specific number of pixels, into which a video area of the moving-picture video signal is divided;	1
a zone-border motion estimator to obtain a boundary condition of each of a plurality of	1

[8] Listed claims also include all Asserted Claims dependent thereon, even if those claims are not individually listed.

borders between the rectangular zones and another plurality of rectangular zones adjacent to the rectangular zones, find a border, of the reference picture, having a boundary condition that matches the boundary condition, by motion-vector search in the reference picture, and generate border motion-vector data that is data on a motion vector from a border of the rectangular zone in the picture to be coded to the border of the reference picture thus found; and	
a zone-border motion compensator to define a boundary condition of a border that corresponds to the border motion vector data, from the reference picture based on the border motion-vector data, and generate an estimated video signal in each rectangular zone in the picture to be coded, that satisfies Poisson's Equation, thus producing a first predictive picture,	1
wherein the predictive encoder produces the residual picture with the first predictive picture as the predictive picture and encodes the residual picture;	1
said predictive encoder including a first subtractor to produce a first residual picture from a difference between the picture to be coded and the first predictive picture;	1
an orthogonal transformer to perform orthogonal transform to the first residual picture, thus generating orthogonal-transform coefficients data;	1
a quantizer to perform quantization to the orthogonal-transform coefficients data based on a specific quantization parameter, thus generating post-quantization data;	1
an inverse-quantizer to perform inverse-quantization to the post-quantization data based on a specific quantization parameter, thus generating post-inverse-quantization data; and	1
an inverse-orthogonal transformer to perform inverse-orthogonal transform to the post-inverse-quantization data, thus producing a decoded residual picture.	1

The moving-picture coding apparatus according to claim 1 wherein the predictive encoder includes an entropy encoder to perform entropy encoding, at least, to the post-quantization data and the border motion-vector data, thus generating coded bitstreames, wherein the moving-picture coding apparatus comprises a multiplexer to multiplex the coded bitstreams based on a specific syntax structure.	3
a predictive encoding program code to produce and encode a residual picture that is a residual signal between a picture to be coded that is an input moving-picture video signal to be subjected to coding and a predictive picture produced from a reference picture that is a local decoded video signal for each of a plurality of rectangular zones, each composed of a specific number of pixels, into which a video area of the moving-picture video signal is divided;	4
a zone-border motion estimation program code to obtain a boundary condition of each of a plurality of borders between the rectangular zones and another plurality of rectangular zones adjacent to the rectangular zones, find a border, of the reference picture, having a boundary condition that matches the boundary condition, by motion-vector search in the reference picture, and generate border motion-vector data that is data on a motion vector from a border of the rectangular zone in the picture to be coded to the border of the reference picture thus found; and	4
a zone-border motion compensation program code to define a boundary condition of a border that corresponds to the border motion vector data, from the reference picture based on the border motion-vector data, and generate an estimated video signal in each rectangular zone in the picture to be coded, that satisfies Poisson's Equation, thus producing a first predictive picture,	4
wherein the predictive encoding program code produces the residual picture with the first	4

predictive picture as the predictive picture and encodes the residual picture;	
said predictive encoding program code including a first subtraction program code to produce a first residual picture from a difference between the picture to be coded and the first predictive picture;	4
an orthogonal transform program code to perform orthogonal transform to the first residual picture, thus generating orthogonal-transform coefficients data;	4
a quantization program code to perform quantization to the orthogonal-transform coefficients data based on a specific quantization parameter, thus generating post-quantization data;	4
an inverse-quantization program code to perform inverse-quantization to the post-quantization data based on a specific quantization parameter, thus generating post-inverse-quantization data;	4
an inverse-orthogonal transform program code to perform inverse-orthogonal transform to the post-inverse-quantization data, thus producing a decoded residual picture; and	4
an entropy coding program code to perform entropy coding, at least, to the post-quantization data and the border motion-vector data, thus generating coded bit strings,	4
wherein the moving-picture coding program further comprises multiplex program code to multiplex the coded bit strings based on a specific syntax structure, thus generating a coded bitstream.	4
a demultiplexer to demultiplex coded data from an input signal based on a specific syntax structure, the input signal being obtained by multiplexing a coded bitstream obtained by predictive coding, border motion-vector data and post-quantization data obtained by quantization in the predictive coding, the coded bitstream obtained by producing and encoding a residual picture that is a residual signal between a picture to be coded that is an input moving-picture video signal to be	6

subjected to coding and a predictive picture produced from a reference picture that is a local decoded video signal for each of a plurality of rectangular zones, each composed of a specific number of pixels, into which a video area of the moving-picture video signal is divided,	
obtaining a boundary condition of each of a plurality of borders between the rectangular zones and another plurality of rectangular zones adjacent to the rectangular zones, finding a border, of the reference picture, having a boundary condition that matches the boundary condition, by motion-vector search in the reference picture, and generating the border motion-vector data that is data on a motion vector from a border of the rectangular zone in the picture to be coded to the border of the reference picture thus found	6
defining a boundary condition of a border that corresponds to the border motion vector data, from the reference picture based on the border motion-vector data, and generating an estimated video signal in each rectangular zone in the picture to be coded, that satisfies Poisson's Equation, thus producing the predictive picture;	6
an entropy decoder to perform entropy decoding to the data thus demultiplexed to generate, at least, motion-vector data, the post-quantization data, the border motion-vector data and parameter data required for constructing a specific syntax structure;	6
an inverse-quantizer to perform inverse-quantization to the post-quantization data to generate post-quantization orthogonal transform coefficients data;	6
an inverse-orthogonal transformer to perform inverse-orthogonal transform to the post-quantization orthogonal transform coefficients data to produce a decoded residual picture of one video area;	6
a zone-border motion compensator to define a boundary condition of a border that corresponds to the border motion vector data,	6

from the reference picture based on the border motion-vector data, and generate an estimated video signal in each rectangular zone in the picture to be coded, that satisfies Poisson's Equation, thus producing a first predictive picture;	
a combiner to combine the first predictive picture and the decoded residual picture to generate a decoded moving-picture signal;	6
a memory to store the decoded moving-picture signal for at least one picture as a reference picture;	6
a motion compensator to specify a corresponding rectangular zone in the reference picture based on the motion-vector data, thus generating a second predictive picture;	6
a selector to select either the first predictive picture or the second predictive picture and supply the predictive picture thus selected to the combiner; and	6
a decoding controller to receive decoding control data for decoding control from the parameter data and control the selector to switch the predictive picture to be supplied to the combiner between the first and second predictive pictures according to the decoding control data.	6
a demultiplex program code to demultiplex coded data from an input signal based on a specific syntax structure, the input signal being obtained by multiplexing a coded bitstream obtained by predictive coding, border motion-vector data and post-quantization data obtained by quantization in the predictive coding, the coded bitstream obtained by producing and encoding a residual picture that is a residual signal between a picture to be coded that is an input moving-picture video signal to be subjected to coding and a predictive picture produced from a reference picture that is a local decoded video signal for each of a plurality of rectangular zones, each composed of a specific number of pixels, into which a video area of the moving-picture video signal is divided,	7

obtaining a boundary condition of each of a plurality of borders between the rectangular zones and another plurality of rectangular zones adjacent to the rectangular zones, finding a border, of the reference picture, having a boundary condition that matches the boundary condition, by motion-vector search in the reference picture, and generating the border motion-vector data that is data on a motion vector from a border of the rectangular zone in the picture to be coded to the border of the reference picture thus found,	7
defining a boundary condition of a border that corresponds to the border motion vector data, from the reference picture based on the border motion-vector data, and generating an estimated video signal in each rectangular zone in the picture to be coded, that satisfies Poisson's Equation, thus producing the predictive picture;	7
an entropy decoding program code to perform entropy decoding to the data thus demultiplexed to generate, at least, the post-quantization data, the border motion-vector data and parameter data required for constructing a specific syntax structure;	7
an inverse-quantization program code to perform inverse-quantization to the post-quantization data to generate post-quantization orthogonal transform coefficients data;	7
an inverse-orthogonal transform program code to perform inverse-orthogonal transform to the post-quantization orthogonal transform coefficients data to produce a decoded residual picture of one video area;	7
a zone-border motion compensation program code to define a boundary condition of a border that corresponds to the border motion vector data, from the reference picture based on the border motion-vector data, and generate an estimated video signal in each rectangular zone in the picture to be coded, that satisfies Poisson's Equation, thus producing a first predictive picture;	7

a combine program code to combine the first predictive picture and the decoded residual picture to generate a decoded moving-picture signal, the decoded moving-picture signal for at least one picture being stored as a reference picture.	7
a motion compensation program code to specify a corresponding rectangular zone in the reference picture based on the motion-vector data, thus generating a second predictive picture;	8
a selection program code to select either the first predictive picture or the second predictive picture and supply the predictive picture thus selected to the combiner;	8
a decoding controlling program code to receive decoding control data for decoding control from the parameter data and control the selector to switch the predictive picture to be supplied to the combiner between the first and second predictive pictures according to the decoding control data.	8
producing and encoding a residual picture that is a residual signal between a picture to be coded that is an input moving-picture video signal to be subjected to coding and a predictive picture produced from a reference picture that is a local decoded video signal for each of a plurality of rectangular zones, each composed of a specific number of pixels, into which a video area of the moving-picture video signal is divided;	9
obtaining a boundary condition of each of a plurality of borders between the rectangular zones and another plurality of rectangular zones adjacent to the rectangular zones, finding a border, of the reference picture, having a boundary condition that matches the boundary condition, by motion-vector search in the reference picture, and generating border motion-vector data that is data on a motion vector from a border of the rectangular zone in the picture to be coded to the border of the reference picture thus found;	9
defining a boundary condition of a border that corresponds to the border motion vector data,	9

from the reference picture based on the border motion-vector data, and generating an estimated video signal in each rectangular zone in the picture to be coded, that satisfies Poisson's Equation, thus producing a predictive picture;	
producing a first residual picture from a difference between the picture to be coded and the predictive picture;	9
performing orthogonal transform to the first residual picture, thus generating orthogonal-transform coefficients data;	9
performing quantization to the orthogonal-transform coefficients data based on a specific quantization parameter, thus generating post-quantization data;	9
performing inverse-quantization to the post-quantization data based on a specific quantization parameter, thus generating post-inverse-quantization data;	9
performing inverse-orthogonal transform to the post-inverse-quantization data, thus producing a decoded residual picture.	9
demultipling coded data from an input signal based on a specific syntax structure, the input signal being obtained by multiplexing a coded bitstream obtained by predictive coding, border motion-vector data and post-quantization data obtained by quantization in the predictive coding, the coded bitstream obtained by producing and encoding a residual picture that is a residual signal between a picture to be coded that is an input moving-picture video signal to be subjected to coding and a predictive picture produced from a reference picture that is a local decoded video signal for each of a plurality of rectangular zones, each composed of a specific number of pixels, into which a video area of the moving-picture video signal is divided,	10
obtaining a boundary condition of each of a plurality of borders between the rectangular zones and another plurality of rectangular zones adjacent to the rectangular zones, finding a border, of the reference picture,	10

having a boundary condition that matches the boundary condition, by motion-vector search in the reference picture, and generating the border motion-vector data that is data on a motion vector from a border of the rectangular zone in the picture to be coded to the border of the reference picture thus found,	
defining a boundary condition of a border that corresponds to the border motion vector data, from the reference picture based on the border motion-vector data, and generating an estimated video signal in each rectangular zone in the picture to be coded, that satisfies Poisson's Equation, thus producing the predictive picture;	10
performing entropy decoding to the data thus demultiplexed to generate, at least, the post-quantization data, the border motion-vector data and parameter data required for constructing a specific syntax structure;	10
performing inverse-quantization to the post-quantization data to generate post-quantization orthogonal transform coefficients data;	10
performing inverse-orthogonal transform to the post-quantization orthogonal transform coefficients data to produce a decoded residual picture of one video area;	10
defining a boundary condition of a border that corresponds to the border motion vector data, from the reference picture based on the border motion-vector data, and generate an estimated video signal in each rectangular zone in the picture to be coded, that satisfies Poisson's Equation, thus producing a predictive picture;	10
combining the first predictive picture and the decoded residual picture to generate a decoded moving-picture signal;	10
storing the decoded moving-picture signal for at least one picture as a reference picture.	10
an estimated video signal	1, 4, 6, 7, 9, 10
satisfies Poisson's Equation	1, 4, 6, 7, 9, 10

b) Lack of Enablement and/or Lack of Written Description

35 U.S.C. § 112, paragraph 1, includes an enablement requirement. *See* 35 U.S.C. § 112, ¶1 ("The specification shall contain a written description . . . of the manner and process of making and using [the invention] in such full, clear, concise and exact terms as to enable any person skilled in the art to which it pertains, or with which it is most nearly connected, to make and use the same.").

To satisfy the enablement requirement of 35 U.S.C. § 112, ¶1, the disclosure "must teach those skilled in the art how to make and use the full scope of the claimed invention without 'undue experimentation.'" *Genentech, Inc. v. Novo Nordisk, A/S*, 108 F.3d 1361, 1365 (Fed. Cir. 1997) (citations omitted). Moreover, "[i]t is the specification, not the knowledge of one skilled in the art, that must supply the novel aspects of [the] invention in order to constitute adequate enablement." *Genentech*, 108 F.3d at 1366. The Federal Circuit has enumerated several factors to consider in determining whether a disclosure would require "undue experimentation": (1) the quantity of experimentation necessary; (2) the amount of direction or guidance presented; (3) the presence or absence of working examples; (4) the nature of the invention; (5) the state of the prior art; (6) the relative skill of those in the art; (7) the predictability or unpredictability of the art; and (8) the breadth of the claims. *In re Wands*, 858 F.2d 731, 737 (Fed. Cir. 1988).

To satisfy the written description requirement, the description must "clearly allow persons of ordinary skill in the art to recognize that [the inventor] invented what is claimed." *Ariad Pharmaceuticals, Inc. v. Eli Lilly and Co.*, 598 F.3d 1336, 1351 (Fed. Cir. 2010) (internal citation omitted). In other words, the test for sufficiency is whether the disclosure of the application relied upon reasonably conveys to those skilled in the art that the inventor had possession of the claimed subject matter as of the filing date. *Id.* The test requires an objective inquiry into the four corners of the specification from the perspective of a person of ordinary skill in the art. Based on that

inquiry, the specification must describe an invention understandable to that skilled artisan and show that the inventor actually invented the invention claimed. "Whether the written description requirement is satisfied is a fact-based inquiry that will depend on the nature of the claimed invention, and the knowledge of one skilled in the art at the time an invention is made and a patent application is filed." *Carnegie Mellon Univ. v. Hoffmann La Roche Inc.*, 541 F.3d 1115, 1122 (Fed. Cir. 2008). Actual "possession" or reduction to practice outside of the specification is not enough. Rather, as stated above, it is the specification itself that must demonstrate possession. A description that merely renders the invention obvious does not satisfy the requirement. *Lockwood v. Am. Airlines*, 107 F.3d 1565, 1571-72 (Fed. Cir. 1997).

All Asserted Claims of the '025 patent are invalid for lack of enablement and/or lack written description because they do not contain an enabling or sufficient disclosure of the specific hardware structure, reference software, source code, and/or other specific details of the invention that would enable a person skilled in the art to practice the claimed invention without undue experimentation.

For example, claims 1, 4, 6, 7, 9, and 10 and its asserted dependent claims fail to satisfy the requirements of 35 U.S.C. § 112(1) because the specification fails to provide an enabling disclosure of using an "estimated video signal" to "generate" a predictive picture. Therefore, the specification fails to provide a written description of using the "estimated video signal" as recited in the above-listed claims or teach a person of ordinary skill how to make or use the same. Further, claims 1, 4, 6, 7, 9, and 10 and their dependent claims fail to satisfy the requirements of 35 U.S.C. § 112(1) because the specification fails to provide an enabling disclosure of how to "satisf[y] Poisson's Equation" without solving it, and the specification fails to provide a written description of how to "satisf[y] Poisson's Equation" without solving it as recited in the above-listed claims or

teach a person of ordinary skill how to make or use the same. Further, a POSA would not understand the specification to enable every possible method of generating an estimated video signal in each rectangular zone in the picture to be coded that satisfies Poisson's Equation, yet the claims purport to cover all possible methods.

The following limitations recited in the '025 Patent Asserted Claims are invalid in whole, in part or in combination, as summarized below:[9]

Table 6-A: Invalid Terms under 35 U.S.C. § 112(1) for the '025 Patent

Term	Relevant Claim(s)
a predictive encoder to produce and encode a residual picture that is a residual signal between a picture to be coded that is an input moving-picture video signal to be subjected to coding and a predictive picture produced from a reference picture that is a local decoded video signal for each of a plurality of rectangular zones, each composed of a specific number of pixels, into which a video area of the moving-picture video signal is divided;	1
a zone-border motion estimator to obtain a boundary condition of each of a plurality of borders between the rectangular zones and another plurality of rectangular zones adjacent to the rectangular zones, find a border, of the reference picture, having a boundary condition that matches the boundary condition, by motion-vector search in the reference picture, and generate border motion-vector data that is data on a motion vector from a border of the rectangular zone in the picture to be coded to the border of the reference picture thus found; and	1
a zone-border motion compensator to define a boundary condition of a border that corresponds to the border motion vector data, from the reference picture based on the border motion-vector data, and generate an estimated	1

[9] Listed claims also include all Asserted Claims dependent thereon, even if those claims are not individually listed.

video signal in each rectangular zone in the picture to be coded, that satisfies Poisson's Equation, thus producing a first predictive picture,	
wherein the predictive encoder produces the residual picture with the first predictive picture as the predictive picture and encodes the residual picture;	1
said predictive encoder including a first subtractor to produce a first residual picture from a difference between the picture to be coded and the first predictive picture;	1
an orthogonal transformer to perform orthogonal transform to the first residual picture, thus generating orthogonal-transform coefficients data;	1
a quantizer to perform quantization to the orthogonal-transform coefficients data based on a specific quantization parameter, thus generating post-quantization data;	1
an inverse-quantizer to perform inverse-quantization to the post-quantization data based on a specific quantization parameter, thus generating post-inverse-quantization data; and	1
an inverse-orthogonal transformer to perform inverse-orthogonal transform to the post-inverse-quantization data, thus producing a decoded residual picture.	1
The moving-picture coding apparatus according to claim 1 wherein the predictive encoder includes an entropy encoder to perform entropy encoding, at least, to the post-quantization data and the border motion-vector data, thus generating coded bitstreames, wherein the moving-picture coding apparatus comprises a multiplexer to multiplex the coded bitstreames based on a specific syntax structure.	3
a predictive encoding program code to produce and encode a residual picture that is a residual signal between a picture to be coded that is an input moving-picture video signal to be subjected to coding and a predictive picture produced from a reference picture that is a local decoded video signal for each of a	4

plurality of rectangular zones, each composed of a specific number of pixels, into which a video area of the moving-picture video signal is divided;	
a zone-border motion estimation program code to obtain a boundary condition of each of a plurality of borders between the rectangular zones and another plurality of rectangular zones adjacent to the rectangular zones, find a border, of the reference picture, having a boundary condition that matches the boundary condition, by motion-vector search in the reference picture, and generate border motion-vector data that is data on a motion vector from a border of the rectangular zone in the picture to be coded to the border of the reference picture thus found; and	4
a zone-border motion compensation program code to define a boundary condition of a border that corresponds to the border motion vector data, from the reference picture based on the border motion-vector data, and generate an estimated video signal in each rectangular zone in the picture to be coded, that satisfies Poisson's Equation, thus producing a first predictive picture,	4
wherein the predictive encoding program code produces the residual picture with the first predictive picture as the predictive picture and encodes the residual picture;	4
said predictive encoding program code including a first subtraction program code to produce a first residual picture from a difference between the picture to be coded and the first predictive picture;	4
an orthogonal transform program code to perform orthogonal transform to the first residual picture, thus generating orthogonal-transform coefficients data;	4
a quantization program code to perform quantization to the orthogonal-transform coefficients data based on a specific quantization parameter, thus generating post-quantization data;	4
an inverse-quantization program code to perform inverse-quantization to the	4

post-quantization data based on a specific quantization parameter, thus generating post-inverse-quantization data;	
an inverse-orthogonal transform program code to perform inverse-orthogonal transform to the post-inverse-quantization data, thus producing a decoded residual picture; and	4
an entropy coding program code to perform entropy coding, at least, to the post-quantization data and the border motion-vector data, thus generating coded bit strings,	4
wherein the moving-picture coding program further comprises multiplex program code to multiplex the coded bit strings based on a specific syntax structure, thus generating a coded bitstream.	4
a demultiplexer to demultiplex coded data from an input signal based on a specific syntax structure, the input signal being obtained by multiplexing a coded bitstream obtained by predictive coding, border motion-vector data and post-quantization data obtained by quantization in the predictive coding, the coded bitstream obtained by producing and encoding a residual picture that is a residual signal between a picture to be coded that is an input moving-picture video signal to be subjected to coding and a predictive picture produced from a reference picture that is a local decoded video signal for each of a plurality of rectangular zones, each composed of a specific number of pixels, into which a video area of the moving-picture video signal is divided,	6
obtaining a boundary condition of each of a plurality of borders between the rectangular zones and another plurality of rectangular zones adjacent to the rectangular zones, finding a border, of the reference picture, having a boundary condition that matches the boundary condition, by motion-vector search in the reference picture, and generating the border motion-vector data that is data on a motion vector from a border of the rectangular	6

zone in the picture to be coded to the border of the reference picture thus found	
defining a boundary condition of a border that corresponds to the border motion vector data, from the reference picture based on the border motion-vector data, and generating an estimated video signal in each rectangular zone in the picture to be coded, that satisfies Poisson's Equation, thus producing the predictive picture;	6
an entropy decoder to perform entropy decoding to the data thus demultiplexed to generate, at least, motion-vector data, the post-quantization data, the border motion-vector data and parameter data required for constructing a specific syntax structure;	6
an inverse-quantizer to perform inverse-quantization to the post-quantization data to generate post-quantization orthogonal transform coefficients data;	6
an inverse-orthogonal transformer to perform inverse-orthogonal transform to the post-quantization orthogonal transform coefficients data to produce a decoded residual picture of one video area;	6
a zone-border motion compensator to define a boundary condition of a border that corresponds to the border motion vector data, from the reference picture based on the border motion-vector data, and generate an estimated video signal in each rectangular zone in the picture to be coded, that satisfies Poisson's Equation, thus producing a first predictive picture;	6
a combiner to combine the first predictive picture and the decoded residual picture to generate a decoded moving-picture signal;	6
a memory to store the decoded moving-picture signal for at least one picture as a reference picture;	6
a motion compensator to specify a corresponding rectangular zone in the reference picture based on the motion-vector data, thus generating a second predictive picture;	6

a selector to select either the first predictive picture or the second predictive picture and supply the predictive picture thus selected to the combiner; and	6
a decoding controller to receive decoding control data for decoding control from the parameter data and control the selector to switch the predictive picture to be supplied to the combiner between the first and second predictive pictures according to the decoding control data.	6
a demultiplex program code to demultiplex coded data from an input signal based on a specific syntax structure, the input signal being obtained by multiplexing a coded bitstream obtained by predictive coding, border motion-vector data and post-quantization data obtained by quantization in the predictive coding, the coded bitstream obtained by producing and encoding a residual picture that is a residual signal between a picture to be coded that is an input moving-picture video signal to be subjected to coding and a predictive picture produced from a reference picture that is a local decoded video signal for each of a plurality of rectangular zones, each composed of a specific number of pixels, into which a video area of the moving-picture video signal is divided,	7
obtaining a boundary condition of each of a plurality of borders between the rectangular zones and another plurality of rectangular zones adjacent to the rectangular zones, finding a border, of the reference picture, having a boundary condition that matches the boundary condition, by motion-vector search in the reference picture, and generating the border motion-vector data that is data on a motion vector from a border of the rectangular zone in the picture to be coded to the border of the reference picture thus found,	7
defining a boundary condition of a border that corresponds to the border motion vector data, from the reference picture based on the border motion-vector data, and generating an estimated video signal in each rectangular zone	7

in the picture to be coded, that satisfies Poisson's Equation, thus producing the predictive picture;	
an entropy decoding program code to perform entropy decoding to the data thus demultiplexed to generate, at least, the post-quantization data, the border motion-vector data and parameter data required for constructing a specific syntax structure;	7
an inverse-quantization program code to perform inverse-quantization to the post-quantization data to generate post-quantization orthogonal transform coefficients data;	7
an inverse-orthogonal transform program code to perform inverse-orthogonal transform to the post-quantization orthogonal transform coefficients data to produce a decoded residual picture of one video area;	7
a zone-border motion compensation program code to define a boundary condition of a border that corresponds to the border motion vector data, from the reference picture based on the border motion-vector data, and generate an estimated video signal in each rectangular zone in the picture to be coded, that satisfies Poisson's Equation, thus producing a first predictive picture;	7
a combine program code to combine the first predictive picture and the decoded residual picture to generate a decoded moving-picture signal, the decoded moving-picture signal for at least one picture being stored as a reference picture.	7
a motion compensation program code to specify a corresponding rectangular zone in the reference picture based on the motion-vector data, thus generating a second predictive picture;	8
a selection program code to select either the first predictive picture or the second predictive picture and supply the predictive picture thus selected to the combiner;	8
a decoding controlling program code to receive decoding control data for decoding control	8

from the parameter data and control the selector to switch the predictive picture to be supplied to the combiner between the first and second predictive pictures according to the decoding control data.	
producing and encoding a residual picture that is a residual signal between a picture to be coded that is an input moving-picture video signal to be subjected to coding and a predictive picture produced from a reference picture that is a local decoded video signal for each of a plurality of rectangular zones, each composed of a specific number of pixels, into which a video area of the moving-picture video signal is divided;	9
obtaining a boundary condition of each of a plurality of borders between the rectangular zones and another plurality of rectangular zones adjacent to the rectangular zones, finding a border, of the reference picture, having a boundary condition that matches the boundary condition, by motion-vector search in the reference picture, and generating border motion-vector data that is data on a motion vector from a border of the rectangular zone in the picture to be coded to the border of the reference picture thus found;	9
defining a boundary condition of a border that corresponds to the border motion vector data, from the reference picture based on the border motion-vector data, and generating an estimated video signal in each rectangular zone in the picture to be coded, that satisfies Poisson's Equation, thus producing a predictive picture;	9
producing a first residual picture from a difference between the picture to be coded and the predictive picture;	9
performing orthogonal transform to the first residual picture, thus generating orthogonal-transform coefficients data;	9
performing quantization to the orthogonal-transform coefficients data based on a specific quantization parameter, thus generating post-quantization data;	9

performing inverse-quantization to the post-quantization data based on a specific quantization parameter, thus generating post-inverse-quantization data;	9
performing inverse-orthogonal transform to the post-inverse-quantization data, thus producing a decoded residual picture.	9
demultipling coded data from an input signal based on a specific syntax structure, the input signal being obtained by multiplexing a coded bitstream obtained by predictive coding, border motion-vector data and post-quantization data obtained by quantization in the predictive coding, the coded bitstream obtained by producing and encoding a residual picture that is a residual signal between a picture to be coded that is an input moving-picture video signal to be subjected to coding and a predictive picture produced from a reference picture that is a local decoded video signal for each of a plurality of rectangular zones, each composed of a specific number of pixels, into which a video area of the moving-picture video signal is divided,	10
obtaining a boundary condition of each of a plurality of borders between the rectangular zones and another plurality of rectangular zones adjacent to the rectangular zones, finding a border, of the reference picture, having a boundary condition that matches the boundary condition, by motion-vector search in the reference picture, and generating the border motion-vector data that is data on a motion vector from a border of the rectangular zone in the picture to be coded to the border of the reference picture thus found,	10
defining a boundary condition of a border that corresponds to the border motion vector data, from the reference picture based on the border motion-vector data, and generating an estimated video signal in each rectangular zone in the picture to be coded, that satisfies Poisson's Equation, thus producing the predictive picture;	10

performing entropy decoding to the data thus demultiplexed to generate, at least, the post-quantization data, the border motion-vector data and parameter data required for constructing a specific syntax structure;	10
performing inverse-quantization to the post-quantization data to generate post-quantization orthogonal transform coefficients data;	10
performing inverse-orthogonal transform to the post-quantization orthogonal transform coefficients data to produce a decoded residual picture of one video area;	10
defining a boundary condition of a border that corresponds to the border motion vector data, from the reference picture based on the border motion-vector data, and generate an estimated video signal in each rectangular zone in the picture to be coded, that satisfies Poisson's Equation, thus producing a predictive picture;	10
combining the first predictive picture and the decoded residual picture to generate a decoded moving-picture signal;	10
storing the decoded moving-picture signal for at least one picture as a reference picture.	10
an estimated video signal	1, 4, 6, 7, 9, 10
satisfies Poisson's Equation	1, 4, 6, 7, 9, 10

B. U.S. Patent No. 9,986,303

1. Alleged Priority Date

A patent may only claim priority to an earlier application if the earlier application fulfills the requirements of § 112(a), which requires, in part, that the application "shall contain a written description of the invention, and of the manner and process of making and using it, in such full, clear, concise, and exact terms as to enable any person skilled in the art to which it pertains, or with which it is most nearly connected, to make and use the same." 35 USC § 112(a). ACT has failed to establish that any Asserted Claim is entitled to a priority date based on the filing of any earlier application. Defendant reserves its right to identify additional bases for this contention in

response to ACT's subsequent arguments and positions, any amendments that ACT makes to its own contentions, the Court's claim construction, or information uncovered during further discovery.

Defendant does not agree, and therefore disputes, that the Asserted Claims of the '303 patent are entitled to the priority date asserted by ACT. Additionally, ACT provides no contention nor any evidence in its infringement contentions demonstrating that the '303 patent was invented earlier than the effective filing date of its earliest foreign application, Japan Patent Application No. 2014-071975, filed March 31, 2014. *See* Infringement Contentions at 8. Thus, the '303 patent is not entitled to any date of invention earlier than the effective filing date of its earliest foreign application, which ACT alleges is March 31, 2014. Defendant's disclosure of prior art is premised on the alleged priority date as identified in Plaintiff's Infringement Contentions. Defendant contends Plaintiff is not entitled to the alleged priority date and reserves the right to modify, amend, or supplement its invalidity contentions with additional prior art references if any Asserted Claim is shown to not be entitled to the respective alleged priority date. Defendant objects to ACT alleging or providing evidence of any earlier date of invention; all such evidence is fully within ACT's control and to the extent ACT claims an earlier priority date, it needed to do so in its infringement contentions. To the extent ACT is able and permitted to assert an earlier date of invention for any of the Asserted Patents, Defendant may modify, amend, and/or supplement these Invalidity Contentions, including, but not limited to its identification and production of additional prior art.

2. General State of the Art at the Time of the Alleged Invention

The claimed invention of the '303 patent is directed to transmitting video image coding data as both basic video image coding data and supplementary video image coding data.

The prior art identified below (including the "References Cited" on the face of the '303 patent) may provide background and context pertinent to the teachings, and interpretation of, the prior art referenced by the claim charts.

For example, the '303 patent cites to US 2011/0082945 (Myers), which describes "adaptive streaming of video" by dividing the video into chunks, where each chunk represents five seconds of video and there are multiple versions of each at different video quality (and thus bandwidth). Myers describes switching between the different chunks based on the available bandwidth. Myers further describes that these systems have been implemented and provides examples including the Move Networks and Microsoft Smooth HDT implementations. Thus, it was well known in the art at the time the application leading to the '303 patent was filed, that when providing adaptive bitrate steaming, the system can switch between streams of different quality levels. *See*, *e.g.*, Myers, Farber, Karczewicz 963, Karczewicz 2001, Karczewicz 2003, Chen 965, Richardson 2010. As further examples, the HLS, Smooth Streaming, HTTP Live Streaming, Android, AppleTV, Chrome, Chromecast, DASHEncoder, FFmpeg, Internet Explorer, iPhone, Netflix, Quicktime, Helix, Silverlight, VLC Media Player, and YouTube Systems all had adaptive bitrate streaming functionality.

Furthermore, it was well-known that coding of pictures for videos involved the use of both intra and inter prediction coded pictures. For example, the '303 patent references the HEVC, MPEG-4, and H.264 standards. And each uses intra and inter prediction coded pictures that are arranged as Groups of Pictures (GOP). Farber at 73 ("multiple bitstreams of different rates," I-frames, P-frames), Karczewicz 963 5:44-48 ("multiple and independent streams of different bandwidth and quality"), 2:7-37 (inter- and intra-coding for group of pictures), Karczewicz 2001 at 1-2 ("multiple and independent streams of different bandwidth and quality," I-pictures,

SP-pictures), Karczewicz 2003 at 1-2 (same), Chen 965 7: [0133]-[0138] (Group of Pictures), [0116]-[0121] (intra- and inter-coded pictures), Richardson 2010 at 240-243, Tillman 6:40-52 (dividing streams into Groups of Pictures with intra and inter frames), Ryu [0037] (same), Ugur at [0181] (same), Choi at [152]-[162] (same), Chen at 8:62-9:8 (Group of Pictures); *see also* Demircin, Cilli, Kesaniemi, Kimoto, Rossato, Van Der Schaar, Senbel, Su, Sugiyama, Suh, Wada.

In addition to the prior art admitted by the '303 patent, the references that anticipate and/or render obvious one or more Asserted Claims are identified in the claim charts of Exhibits B01-B42 (collectively, "Appendix B") and in Section III.B.3, *infra*.

3. Disclosure of Prior Art References (P.R. 3-3(a))

Pursuant to P.R. 3-3(a), Defendant identifies at least the following prior art now known to it to anticipate and/or render obvious one or more of the Asserted Claims of the '303 patent, either expressly, implicitly, or inherently as understood by a person having ordinary skill in the art.

a) Prior Art Patents, Patent Applications, And Publications

In addition to the prior art admitted by the '303 patent, the following patents, patent applications, and publications are prior art to the '303 patent under at least 35 U.S.C. § 102(a)(1) and anticipate and/or render obvious the Asserted Claims of the '303 patent:

Table 1-B: Prior Art Patents and Patent Applications for the '303 Patent

Patent or Patent Application No.	Country of Origin	Date of Issue (if Issued Patent)	Exhibit[10]	Anticipates	Renders Obvious
US 5,886,736 ("Chen")	United States	3/23/1999	B1		X
US 6,496,980 ("Tillman")	United States	12/17/2002	B2		X
US 6,765,963 ("Karczewicz 963")	United States	7/20/2004	B3	X	X

[10] Exhibit numbers have only been listed for primary references. Additional prior art references that disclose and render obvious certain elements are described in Sections III.B.4-.5 *infra*, as well as the discussion of the general state of the art in Section III.B.2, *supra*.

US 8,462,797 (“Cilli”)	United States	6/11/2013	B4		X
US 8,588,293 (“Kimoto”)	United States	11/19/2013	B5		X
US 20030067984A1 (“Sugiyama”)	United States	4/10/2003	B6		X
US 20040146011 (“Kesaniemi”)	United States	7/29/2004	B7		X
US 20050135478A1 (“Van Der Schaar”)	United States	6/23/2005	B8		X
US 20060233235A1 (“Ryu”)	United States	10/19/2006	B9		X
US 20080181302 (“Demircin”)	United States	7/31/2008	B10	X	X
US 20120092453 (“Suh”)	United States	4/19/2012	B11		X
US 20120099831A1 (“Wada”)	United States	4/26/2012	B12		X
US 2013/0297466 (“Rossato”)	United States	11/7/2013	B13		X
US 20130329781A1 (“Su”)	United States	12/12/2013	B14		X
US 20140219346A1 (“Ugur”)	United States	8/7/2014	B15		X
WO2013115562A1 (“Choi”)	WO	8/8/2013	B16		X
US 6,263,150B1 (“Okada”)	United States	7/17/2001			X
US 7,383,346B2 (“Gemmell”)	United States	6/3/2008			X
US 8,040,952B2 (“Park”)	United States	10/18/2011			X
US 8,121,460B2 (“Sasaki”)	United States	2/21/2012			X
US 8,204,134B2 (“Hannuksela 134”)	United States	6/19/2012			X
US 8,385,667 (“Haskell 667”)	United States	2/26/2013			X
US 8.543,720 (“Wormley”)	United States	9/24/2013			X
US 8.832,297 (“Soroushian”)	United States	9/9/2014			X
US 9,479,776B2 (“Wang”)	United States	10/25/2016			X
US 9,560,379B2 (“Song”)	United States	1/31/2017			X

US 9,774,927B2 (“Rusert”)	United States	9/26/2017			X
US 2003/0195977 (“Liu”)	United States	10/16/2003			X
US 2006/0023748 (“Chandhok”)	United States	2/2/2006			X
US 2006/0067402 (“Wu 402”)	United States	3/30/2006			X
US 2006/0168632 (“Honda”)	United States	7/27/2006			X
US 20060088094A1 (“Cieplinski”)	United States	4/27/2006			X
US 2007/0030893 (“Chen 893”)	United States	2/8/2007			X
US 20070153916 (“Demircin 916”)	United States	7/5/2007			X
US 2007/0274381 (“Li”)	United States	11/29/2007			X
US 20080259796 (“Abousleman”)	United States	10/23/2008			X
US 20080292005A1 (“Xu”)	United States	11/27/2008			X
US 20090097548 (“Karczewicz 548”)	United States	4/16/2009			X
US 2009/0122877 (“Haskell 877”)	United States	5/14/2009			X
US 2010/0008419 (“Wu 419”)	United States	1/14/2010			X
US 20100189182 (“Hannuksela 182”)	United States	7/29/2010			X
US 20110082945 (“Myers”)	United States	4/7/2011			X
US 20110211631 (“Kimoto 631”)	United States	9/1/2011			X
US 20120076201A1 (“Kimmich”)	United States	3/29/2012			X
US 2012/0099831 (“Wada”)	United States	4/26/2012			X
WO2002/043398 (“Ramanzin”)	WO	5/30/2002			X
WO2002/073427 (“Bishay”)	WO	9/19/2002			X
WO2007037618A1 (“Lim”)	WO	4/5/2007			X
WO2014002375A1 (“Moriya”)	WO	1/3/2014			X

FR 2930106B1 ("Onno")	France	10/9/2016			X
KR 100461207B1 ("Rosengren")	Korea	4/21/2005			X
US 2012/0016965 ("Chen 965")	United States	1/19/2012	B42		X

Table 2-B: Prior Art Publications for the '303 Patent

Title	Date of Publication	Author/ Publisher	Exhibit[11]	Anticipates	Renders Obvious
Robust H.263 Compatible Video Transmission for Mobile Access to Video Servers ("Farber")	1997	Farber	B17		X
"A Proposal for SP-frames" from ITU: Video Coding Experts Group, Twelfth Meeting: Eibsee, Germany, 9-12 January, 2001 ("Karczewicz 2001")	1/4/2001	Karczewicz	B18	X	X
The SP- and SI-Frames Design for H.264/AVC ("Karczewic 2003")	2003	Karczewicz	B19		X
The H.264 Advanced Video Compression Standard ("Richardson 2010")	2010	Richardson	B20		X
Senbel, A Family of Hierarchical Encoding Techniques for Image and Video Communication s, Dissertation, Computer Science, Old Dominion University ("Senbel")	1999	Senbel	B21	X	X

[11] Exhibit numbers have only been listed for primary references. Additional prior art references that disclose and render obvious certain elements are described in Sections III.B.4-.5 *infra*, as well as the discussion of the general state of the art in Section III.B.2, *supra*.

HTTP Live Streaming ("HLS")	April 16, 2014		B22		X
IIS Smooth Streaming Technical Overview ("Smooth Streaming")	March 2009		B23		X
ISO/IEC 23009-1:2012 Information technology — Dynamic adaptive streaming over HTTP (DASH) — Part 1: Media presentation description and segment formats ("MPEG-DASH")	2012		B24		X
Birney, Intelligent Streaming ("Birney")	2000	Birney			X
Chien, Region-of-Interest-Based Ultra-Low-Bit-Rate Video Coding ("Chien")	2008	Chien			X
Girod, A Brief History Of Streaming Media, Stanford University, 2006/07 ("Girod")	2006	Girod			X
Laabs, Adaptive Multicast Streaming, Dec. 2012 ("Laabs")	2012	Laabs			X
Mathew, Overview of Temporal Scalability With Scalable Video Coding (SVC), Texas Instruments, Nov. 2010 ("Mathew")	2010	Mathew			X
H. Schwarz, Overview of the Scalable Video Coding Extension of the H.264/AVC Standard, IEEE Transactions on Circuits and Sys. for Video Tech., Vol. 17,	2007	Schwarz			X

No. 9, Sept. 2007 ("Schwarz")					
Segall, Spatial Scalability Within the H.264/AVC Scalable Video Coding Extension, IEEE Transactions on Circuits and Sys. for Video Tech., Vol. 17, No. 9, Sept. 2007 ("Segall")	2007	Segall			X
Spielvogel, Application Layer Scalable Video Coding For The iPhone, University of Neuchatel, 2010 ("Spielvogel")	2010	Spielvogel			X
Sun, An Overview Of Scalable Video Streaming, Mitsubishi Elec. Research Labs., Feb.2007 ("Sun")	2007	Sun			X
Unanue, A Tutorial On H.264/SVC Scalable Video Coding And Its Tradeoff Between Quality, Coding Efficiency And Performance, June 2011 ("Unanue")	2011	Unanue			X
Wenger, Using RFC2429 and H.263+ at low to medium bit-rates for low-latency applications ("Wenger")	1999	Wenger			X
Wu et al., Loss Tolerant Bandwidth Aggregation for Multihomed Video Streaming over Heterogeneous	2014	Wu			X

Wireless Networks (March 2014) ("Wu")					
ITU-T, Joint Collaborative Team on Video Coding, Scalable HEVC (SHVC) Test Model 5 (SHM 5), 16th Meeting: San Jose, US, 9-17 Jan. 2014 ("JCTVC-P1007")	2014				X
MPEG-4 Advanced Video Coding ("MPEG-4")	2004			X	X
Honeycomb ("Android 3.0")	2011				X
Android 4.3 and Updated Developer Tools ("Android 4.3")	2013				X
What is HLS (HTTP Live Streaming)? ("Ozer")	10/2011				X
Ready to cast: Chromecast now open to developers with the Google Cast SDK ("Cast SDK")	2/2014				X
Hulu: All Our Google Chromecast Streaming Uses MPEG-DASH ("Hulu")	1/2014				X
Chromecast manual ("Chromecast Manual")	1/2014				X
Dynamic Adaptive Streaming over HTTP Dataset ("Lederer")	7/2013				X
Ffmpeg Formats Documentation ("Ffmpeg 2014")	2014				X
MPEG-DASH Tutorial: Embedding an adaptive streaming video within your	1/3/2014				X

HTML5 application (“Gardler”)					
HTTP Live Streaming Resources (“HLS Resources”)	2/2014				X
Netflix Sees Cost Savings in MPEG DASH Adoption (“Dreier”)	12/2011	Dreier			X
Adhikari, Unreeling Netflix: Understanding and Improving Multi-CDN Movie Delivery (“Adhikari”)	2012	Adhikari			X
HTTP Live Streaming Overview (“HLS Overview”)	4/1/2011				X
Helix Broadcaster Datasheet (“Helix Datasheet”)	2013				X
Smooth Streaming Deployment Guide (“SS Guide”)	8/2010				X
Microsoft Smooth Streaming Client 2.0 (“SS Client”)	5/31/2012				X
Microsoft Silverlight Applications (“Silverlight Applications”)	5/31/2012				X
Delivering Live and On-Demand Smooth Streaming (“iStreamPlanet”)					X
A VLC Media Player Plugin enabling Dynamic Adaptive Streaming over HTTP (“Muller”)	11/2011	Muller			X
git.videolan.org/ffmpeg.git/commit (Jan. 10, 2012) (“HLS commit”)	1/10/2012				X
Google I/O 2013 – Adaptive Streaming	2013				X

for You and YouTube (“Google I/O”)					
Guidelines for Implementation: DASH-AVC/264 Interoperability Points (“DASH Industry Forum”)	8/15/2013				X
ITU-T Recommendation H.262, Generic Coding of Moving Pictures and associated audio information, Feb.2000 (“H.262 2000”)	2000				X
ITU-T Recommendation H.263, Video coding for low bit rate communication, Jan. 2005 (“H.263 2005”)	2005			X	X
ITU-T Recommendation H.264, Advanced video coding for generic audiovisual services, Mar. 2005 (“H.264 2010”)	2010			X	X
REDACTED				X	X
REDACTED	5/7/2012			X	X
REDACTED				X	X
REDACTED				X	X

REDACTED				X	X
REDACTED	9/12/2013			X	X
REDACTED	7/7/2014			X	X
REDACTED				X	X
REDACTED	1/8/2014			X	X
REDACTED	2014			X	X
REDACTED				X	X

b) Prior Art Systems

Numerous systems are prior art to the ’303 patent under at least 35 U.S.C. §§ 102(a)(1) and anticipate and/or render obvious the Asserted Claims of the ’303 patent. These systems also include physical implementations of prior art patents, patent applications, and publications identified herein that were known, made, used, sold, offered for sale, or imported into this country prior to the effective filing dates of the ’303 patent, including those identified above and discussed in the sections below. Defendant’s reference to a particular product, device, or software program in these contentions should be interpreted as a reference to the system itself as well as to any corresponding patents, publications, or product literature relating to the cited system. Although Defendant’s investigation continues, information available to date indicates that numerous systems, including the YouTube System cited in Appendix B, were (1) patented, described in a

printed publication, or in public use, on sale, or otherwise available to the public before the effective filing date of the alleged invention of the claimed subject matter of the Asserted Claims, and/or (2) described in a patent or in an application for patent published or deemed published, in which the patent or application names another inventor and was effectively filed before the alleged invention of the claimed subject matter of the Asserted Claims.

In addition Defendant may rely on systems or other embodiments of the subject matter described in each of the references described above. Each of the references cited in support of the above systems may also be prior art individually under 35 U.S.C. §§ 102(a)(1).

As discovery is ongoing, Defendant continues to investigate these items and may amend or supplement these contentions to include additional information or documents regarding such products and/or systems.

Table 3-B: Prior Art Systems and Inventions for the '303 Patent

Name of System or Invention	Date of Sale/ Offer for Sale / Public Use / Known by Others	Exhibit	Anticipates	Renders Obvious
Systems Implementing HLS	April 16, 2014	B25	X	X
Systems Implementing Microsoft Smooth Streaming	March 2009	B26	X	X
Systems Implementing MPEG-DASH	2012	B27	X	X
Android	2013	B28	X	X
AppleTV	10/2011	B29	X	X
Chrome	2/2014	B30	X	X
Chromecast	2/2014	B31	X	X
DASHEncoder	7/2013	B32	X	X
Ffmpeg	2/2014	B33	X	X
Internet Explorer	1/3/2014	B34	X	X
iPhone	10/2011	B35	X	X
Netflix	12/2011	B36	X	X

Quicktime	4/1/2011	B37	X	X
Helix	2013	B38	X	X
Silverlight	8/2010	B39	X	X
VLC Media Player	1/2012	B40	X	X
YouTube	2013	B41	X	X
HTC Touch Cruise Phone (“HTC Touch Cruise”)	2008		X	X
HTC Touch Dual Phone (“HTC Touch Dual”)	2007		X	X
Adobe Flash Player 9 (“Adobe FP9”)	2007		X	X
Qualcomm MSM7200 Chipset Solution (“MSM 7200”)	2007		X	X
Horizon Semiconductor Hz7220 System-On-a-Chip Solution (“Hz7220”)	2007		X	X
Honeywell HRDPX16 Performance Series Digital Video Recorder (“HRDPX 16 H.264 DVR”)	2011		X	X
Roku PhotoBridge HD1000 Product (“Roku Product”)	2003		X	X
Roku PhotoBridge HD1000 System (“Roku System”)	2003		X	X
MPEG-2 SAVI Decoder, Hyundai Electronics (“Hyundai Decoder”)	1995		X	X
VidyoRoom (“VidyoRoom”)	2008		X	X
VidyoPortal (“VidyoPortal”)	2008		X	X
VidyoDesktop (“VidyoDesktop”)	2008		X	X

Cisco Webex Platform ("Webex")	2007		X	X
Polycom HDX4000 ("Polycom HDX4000")	2007		X	X
Broadcom BCM7411	2004		X	X
Conexant CX2418X	2004		X	X
Xbox Media Center (XBMC) / Kodi	2002		X	X
Sony Playstation	1994		X	X
Sony Playstation 2	2000		X	X
Sony Playstation Portable (PSP)	2004		X	X
Microsoft Xbox	2001		X	X
Microsoft Xbox 360	2005		X	X
Systems Implementing H.261			X	X
Systems Implementing H.262			X	X
Systems Implementing H.263			X	X
Systems Implementing H.264			X	X

4. Anticipation and Obviousness Under P.R. 3-3(b) and (c)

35 U.S.C. § 102(a) provides that "[a] person shall be entitled to a patent unless . . . the claimed invention was patented, described in a printed publication, or in public use, on sale, or otherwise available to the public before the effective filing date of the claimed invention." To be anticipatory, a reference must describe, either expressly or inherently, each and every limitation and enable one of skill in the art to practice an embodiment of the claimed invention without undue experimentation. *Stored Value Solutions, Inc. v. Card Activation Technologies, Inc.*, 2012 WL

6097674, at *8 (Fed. Cir. 2012). A reference may anticipate inherently if a claim limitation that is not expressly disclosed "is necessarily present, or inherent, in the single anticipating reference." *In re Aoyama*, 656 F.3d 1293, 1337 (Fed. Cir. 2011) (quoting *Schering Corp. v. Geneva Pharm., Inc.*, 339 F.3d 1373, 1377 (Fed. Cir. 2003)); *Akamai Technologies, Inc. v. Cable & Wireless Internet Services, Inc.*, 344 F.3d 1186, 1195 (Fed. Cir. 2003) (finding hierarchical DNS servers inherent in any Internet system).

Each of the Asserted Claims of the '303 patent is anticipated and/or rendered obvious by prior art. Pursuant to P.R. 3–3(b), Defendant identifies the prior art references that anticipate or render obvious an Asserted Claim in the claim charts of Appendix B, which are hereby incorporated by reference as if fully set forth herein, and in Section III.B.3.

Pursuant to P.R. 3-3(c), the claim charts of Appendix B, provide an identification where these prior art references teach or suggest each and every element of the Asserted Claims of the '303 patent. For each reference or combination of references suggested by each chart, Defendant indicates whether the prior art renders the claim anticipated and/or obvious pursuant to P.R. 3–3(b). In addition to contending that the Asserted Claims are invalid in view of the prior art references cited in the claim charts of Appendix B and admitted prior art, Defendant further contend that the Asserted Claims are invalid as anticipated and/or obvious under 35 U.S.C. § 102(a) in view of public knowledge and uses and/or offers for sale of products and services related to the subject matter of the cited references. Reference to a particular circuitry, software program, device or product in the claim charts of Appendix B should be interpreted as a reference to the product itself and any corresponding patents, publications, or product literature cited in Appendix B that relates to the cited circuitry, software program, device, or product. In addition, Defendant may rely on other documents or things that have not yet been located to support its contentions

regarding such prior art circuit(s), software program(s), device(s) or product(s) that are referenced in the charts.

Defendant incorporates by reference, as if set forth fully herein, all prior art cited during the prosecution of the ’303 patent. In addition, Defendant identifies and hereby incorporates by reference as if set forth fully herein the prior art references that anticipate or render obvious an asserted claim as described in a future reexaminations or *inter partes* reviews of the ’303 patent, if any, that a requestor may file or the PTO may grant.

Defendant further identifies and hereby incorporates by reference as if set forth fully herein the prior art references and invalidity contentions as described in any other lawsuits wherein invalidity contentions have been, or will be, provided regarding the ’303 patent, any foreign counterparts, or any parent or child patent of the ’303 patent. *Advanced Coding Techs. V. LG Elecs.*, No. 2:22-cv-00501-JRG (E.D. Tex. July 18, 2024), D.I. No. 148-3 (Ex. B Samsung’s May 30, 2024 Amended Invalidity and Subject Matter Eligibility Contentions); *Advanced Coding Techs. V. Apple, Inc.*, No. 2:22-cv-00572-JRG (E.D. Tex.), D.I. 42 (Third Amended Docket Control Order).

Defendant may use any and all portions of the publication, related publications, commercial embodiments of the publication, and other evidence that is discovered in these lawsuits to demonstrate and/or evidence the components, functionality, and capabilities of the devices and systems disclosed in the references charted.

Where Defendant identifies a particular figure in a prior art reference, the identification should be understood to encompass the caption and description of the figure, as well as any text relating to the figure in addition to the figure itself. Similarly, where an identified portion of text refers to a figure or other material, the identification should be understood to include the referenced

figure or other material as well. It should be recognized that a person of ordinary skill in the art would generally read a prior art reference as a whole and in the context of other publications, literature, and general knowledge in the field. To understand and interpret any specific statement or disclosure in a prior art reference, a person of ordinary skill in the art would rely upon other information including other publications and general scientific or engineering knowledge. Defendant therefore may rely upon other unidentified portions of the prior art references and on other publications and expert testimony to provide context and to aid understanding and interpretation of the identified portions.

Defendant may also rely upon other portions of the prior art references, other publications, and the testimony of experts to establish that the alleged inventions would have been obvious to a person of ordinary skill in the art, including the basis of modifying or combining certain cited references. To the extent any limitation is deemed not to be met by an item of prior art, then any purported differences are such that the claimed subject matter as a whole would have been obvious to one skilled in the art at the time of the alleged invention, in view of the state of the art and knowledge of those skilled in the art. To the extent that an element of an Asserted Claim is not anticipated, the claim is rendered obvious by combination with one or more other prior art references identified in Appendix B and the admitted prior art.

5. Obviousness Under P.R. 3-3(b) and (c)

a) Prior Art Rendering Asserted Claims Obvious

In general, a claimed invention is unpatentable under 35 U.S.C. § 103 if "the differences between the subject matter sought to be patented and the prior art are such that the subject matter as a whole would have been obvious at the time the invention was made to a person having ordinary skill in the art." 35 U.S.C. § 103; *Graham v. John Deere Co.*, 383 U.S. 1, 13-14 (1966). The ultimate determination of whether an invention is or is not obvious is a legal conclusion based on

[redacted]

underlying factual inquiries including: "(1) the scope and content of the prior art; (2) the level of ordinary skill in the art; (3) the differences between the claimed invention and the prior art; and (4) objective evidence of nonobviousness." *Miles Labs., Inc. v. Shandon, Inc.*, 997 F.2d 870, 877 (Fed. Cir. 1993). *See also Graham*, 383 U.S. at 17-18.

A claimed invention is obvious when a skilled artisan would have been motivated to combine the teaching of the prior art references to achieve the claimed invention, and the skilled artesian would have had a reasonable expectation of success in doing so. *See, e.g., Unigene Labs., Inc. v. Apotex, Inc.*, 655 F.3d 1352, 1360 (Fed. Cir. 2011). "Any need or problem known in the field of endeavor at the time of the invention and addressed by the patent can provide a reason for combining the elements in the manner claimed." *See KSR Int'l Co. v. Teleflex Inc.*, 550 U.S. 398, 420 (2007). While an analysis of any teaching, suggestion, or motivation to combine elements from different prior art references is useful in an obviousness analysis, such analyses should not be rigidly applied; the overall inquiry must be expansive and flexible, and must include the common sense and ordinary creativity of a person having ordinary skill in the art as part of the analysis. *Id.* at 419-21.

Pursuant to P.R. 3–3(b), Defendant identifies in Appendix A and in the sections below the prior art references that render obvious under 35 U.S.C. §103(a) the Asserted Claims of the '303 patent and include an identification of combinations showing the obviousness of the Asserted Claims in view of the prior art. Moreover, to the extent ACT contends that an element is not disclosed in any one of the references identified in Appendix B, such reference may be combined with one or more of the other references identified in Appendix B and/or the admitted prior art for such element, thereby rendering the claim invalid as obvious. Defendant may combine any prior art reference identified for the '303 patent with any other prior art reference identified for the '303

patent to assert obviousness. Even if a prior art reference does not expressly disclose all limitations as arranged or combined in the same manner as an asserted claim, a skilled artisan reading the reference would at once envisage the claimed arrangement or combination. *See, e.g.*, *Kennametal Inc. v. Ingersoll Cutting Tool Co.*, 780 F.3d 1376 (Fed. Cir. 2015).

To the extent a finder of fact determines that a limitation of any of the Asserted Claims of the ’303 patent is not disclosed by one of the references or products and systems identified above pursuant to P.R. 3–3(a), the claims are nevertheless unpatentable as obvious because they contain nothing that constitutes patentable innovation. To the extent a finder of fact determines that a limitation of any of the Asserted Claims of the ’303 patent is not anticipated, no asserted claim goes beyond combining familiar elements according to known methods to achieve predictable results or does more than choose between clear alternatives known to those of ordinary skill in the art.

b) Teaching, Suggestion, or Motivation to Combine References

The U.S. Supreme Court decision in *KSR International Co. v. Teleflex Inc.*, 127 S. Ct. 1727, 1739 (2007) (“*KSR*”) held that a claimed invention can be obvious even if there is no explicit, written teaching, suggestion, or motivation for combining the prior art to produce that invention. Accordingly, no showing of a specific motivation to combine prior art is required to combine the references disclosed in the attached charts, as each combination of art would have no unexpected results, and, at most, would simply represent a known alternative to one of ordinary skill in the art. *See KSR*, 127 S. Ct. at 1739-40 (rejecting the Federal Circuit’s “rigid” application of the teaching, suggestion, or motivation to combine test, and instead espousing an “expansive and flexible” approach). A person of ordinary skill in the art is “a person of ordinary creativity, not an automaton” and “in many cases a person of ordinary skill in the art will be able to fit the teachings of multiple patents together like pieces of a puzzle.” *Id.* at 1742. “In determining whether the

subject matter of a patent claim is obvious, neither the particular motivation nor the avowed purpose of the patentee controls. What matters is the objective reach of the claim." *Id.* at 1741-42. "Under the correct analysis, any need or problem known in the field of endeavor at the time of invention and addressed by the patent can provide a reason for combining the elements in the manner claimed." *Id.* at 1742. In particular, the Supreme Court emphasized the principle that "[t]he combination of familiar elements according to known methods is likely to be obvious when it does no more than yield predictable results." *Id.* At 1739. A key inquiry is whether the "improvement is more than the predictable use of prior art elements according to their established functions." *Id.* at 1740.

"Additionally, 'universal' motivations known in a particular field to improve technology provide 'a motivation to combine prior art references *even absent any hint of suggestion* in the references themselves.'" *Intel Corp. v. PACT XPP Schweiz AG*, 61 F.4th 1373, 1379 (Fed. Cir. 2023) (quoting *Intel Corp. v. Qualcomm Inc.*, 21 F.4th 784, 797-99 (Fed. Cir. 2021)) (original emphasis). Thus, motivations to combine, as well as the general state of the art, may be found in a variety of places including, but not limited to, in the references defined above, and the specification of the Asserted Patents.

The rationale to combine or modify prior art references is significantly stronger when the references seek to solve the same problem, come from the same field, and correspond well. *In re Inland Steel Co.*, 265 F.3d 1354, 1362 (Fed. Cir. 2001). The Federal Circuit allowed two references to be combined as invalidating art when "[the prior art] focus[es] on the same problem that the . . . patent addresses . . . Moreover, both [prior art references] come from the same field . . . Finally, the solutions to the identified problems found in the two references correspond well." *Id.* At 1362.

In *KSR*, the Supreme Court emphasized that inventions arising from ordinary innovation, ordinary skill, or common sense should not be patentable. *See KSR Int'l Co. v. Teleflex Inc.*, 550 U.S. 398 (2007). Although a patent challenger is not required to show that one of ordinary skill in the art would have had a specific motivation to combine prior art references, such a showing may be helpful to the obviousness analysis. *Id.* at 418; *see also id.* at 402. Exemplary rationales that may support a conclusion of obviousness include:

- Combining various claimed elements known in the prior art according to known methods to yield a predictable result;
- Making a simple substitution of one or more known elements for another to obtain a predictable result;
- Using a known technique to improve a similar device or method in the same way;
- Applying a known technique to a known device or method ready for improvement to yield a predictable result;
- Choosing from a finite number of identified, predictable solutions with a reasonable expectation of success, such that the solution was one which was "obvious to try";
- A known work in one field of endeavor prompting variations of it for use either in the same field or a different field based on design incentives or other market forces in which the variations were predictable to one of ordinary skill in the art; and
- A teaching, suggestion, or motivation in the prior art that would have led one of ordinary skill in the art to modify the prior art reference or to combine the teachings of various prior art references to arrive at the claimed invention.

Although Defendant contends that no specific motivation to combine is necessary for the references cited in the attached exhibits, consistent with the Patent Rules, Defendant hereby identifies additional motivations and reasons to combine the cited art. These exemplary discussions regarding obviousness are illustrative, and not intended to be exhaustive. To the extent ACT challenges a combination of prior art with respect to a particular element, Defendant reserves all rights to supplement these Contentions to further specify the motivation to combine the prior art. Defendant may rely on cited or uncited portions of the prior art, other documents, and/or expert

testimony to establish that a person of ordinary skill in the art would have been motivated to modify or combine the prior art so as to render the claims invalid as obvious.

First, one of skill in the art would have been motivated to combine one or more of: (i) the admitted prior art; and/or (ii) the references identified in Appendix B, with one another, because they all relate to common objectives and subject matter. The references share commonalities in terms of their general subject matter, as well as the types of equipment, products, and/or approaches they describe. Moreover, a person of ordinary skill would have been motivated to combine the above prior art based on the nature of the problem to be solved, the teachings of the prior art, and the knowledge of persons of ordinary skill in the art. The identified prior art addresses the same or similar technical issues and suggests the same or similar solutions to those issues. To the extent ACT challenges a combination of prior art with respect to a particular element, Defendant may supplement these contentions to further specify the motivation to combine the prior art. Defendant may rely on cited or uncited portions of the prior art, other documents, and/or expert testimony to establish that a person of ordinary skill in the art would have been motivated to modify or combine the prior art so as to render the claims invalid as obvious. For example, each of the following relate to the same technical issues: encoding and decoding of videos: Farber at Abstract ("precoded bitstreams"), Karczewicz 963 at Title ("Video Decoder"), Karczewicz 2001 at 1 ("encoding"), Karczewicz 2003 at Abstract ("video coding"), Chen 965 at [0002] ("encoded video data"), Richardson 2010 at 240 ("coded at multiple bitrates"), Chen at Abstract ("Decoding"), Choi at Title ("Video Encoding"), Cilli at Abstract ("video coded in multiple layers"), Demircin at [0025] ("transcoding"), Kesaniemi at [0008] ("encoding"), Kimoto at 1:27-31 ("image coding methods"), Rossato at Abstract ("decoder"), Ryu at Title ("Video Encoding/Decoding"), Van Der Schaar at Title ("Layer-Decoding"), Senbel at Title ("Encoding Techniques"), Su at Abstract

(“coding server”), Sugiyama at Title (“Coding/Decoding”), Suh at Abstract (“encoder”), Tillman at Abstract (“client system ... decodes”), Ugur at Title (“Video Coding and Decoding”), and Wada at Abstract (“encoded video data”).

Second, a person of ordinary skill in the art would have understood that the references identified in Appendix B explicitly or implicitly reference other prior art that share common authors or inventors, were published in the same journals, presented at the same conferences, were presented as proposals to standards working groups, and/or were developed at common companies, schools, or organizations, all of which would motivate one of skill in the art to combine them. Design incentives and other market forces would have prompted those combinations and modifications. “When there is a design or market pressure to solve a problem and there are a finite number of identified, predictable solutions, a person of ordinary skill has good reason to pursue known options within his or her technical grasp.” *KSR Int’l, 127 S. Ct.* at 1742. Moreover, some pieces of prior art refer to or discuss other pieces of prior art, illustrating the close technical relationship among the prior art. To the extent any piece of prior art refers to or discusses other pieces of prior art, either expressly or inherently, it would have been obvious to combine those pieces of prior art for that reason. For example, the ’303 patent describes that coding may be done based on various “international standard[s],” such as HEVC and MPEG-4AVC/H.264. For example, Farber, Karczewicz 963, Karczewicz 2001, Karczewicz 2003, Chen 965, Richardson 2010, Cilli, Demircin, Kimoto, Ryu, Su, Suh, Ugur, and Wada also cite these standards. It would have been obvious to combine any of the references in Appendix B and the admitted prior art with these established standards as each was intended to improve or build upon these standards. Further, to the extent that any reference discusses standardized coding methods, those references would have been compatible with each other for the same reason.

Third, the references identified in Appendix B and the admitted prior art are also directed to similar subject matter within that field. Additionally, any products, devices, or processes described in the references existed and/or were invented before or during the period in which the claimed inventions were developed, providing further motivation to combine them. For example, each of the following relate to video encoders and decoders around March 31, 2014: Farber, Karczewicz 963, Karczewicz 2001, Karczewicz 2003, Chen 965, Richardson 2010, Chen, Choi, Cilli, Demircin, Kesaniemi, Kimoto, Rossato, Ryu, Van Der Schaar, Senbel, Su, Sugiyama, Suh, Tillman, Ugur, and Wada.

Fourth, one or more combinations of the admitted prior art and prior art references identified in Appendix B, pursuant to P.R. 3–3(b), would have been obvious because these references would have been combined with one another using: known methods to yield predictable results; known techniques in the same way; a simple substitution of one known, equivalent element for another to obtain predictable results; and/or a teaching, suggestion, or motivation in the prior art generally. The Asserted Claims are obvious, in part, because they merely arrange old elements, with each performing the same function that had been known, to perform and yield no more than what one of ordinary skill would expect from such an arrangement. Because there were a finite number of predictable solutions in the art of delivering content in response to a request, it would have been obvious to a person of ordinary skill in the art to pursue the known options. The identified prior art references merely use those familiar elements for their primary or well-known purposes and in a manner well within the ordinary level of skill in the art. Accordingly, common sense and the knowledge of the prior art render the Asserted Claims invalid as well.

For example, the ’303 patent admits that it was known in the prior art that transmission rates will change depending on the network conditions. In addition, it would have been obvious to

try combining the prior art references identified above because there were only a finite number of predictable solutions and/or because known work in one field of endeavor prompted variations based on predictable design incentives and/or market forces either in the same field or a different one. For example, because the transmission rate was known to change, it would have been obvious to a POSA to try to monitor the transmission rate or to control the transmission of data based on the transmission rate. For example, Karcewicz 963 explains that "[t]he problem with video streaming is that the best-effort nature of today's networks causes variations of the effective bandwidth available to a user due to the changing network conditions" and that transmission parameters can be adjusted based on "network feedback." Karcewicz 963 at 5:26-43. Karcewicz 963 also describes the well known concept of adaptive bitrate streaming: "The simplest way of achieving bandwidth scalability in case of pre-encoded Sequences is by producing multiple and independent streams of different bandwidth and quality. The server dynamically switches between the streams to accommodate variations of the bandwidth available to the client." Karcewicz 963 at 5:44-48; *see also* Myers, Farber, Karczewicz 963, Karczewicz 2001, Karczewicz 2003, Chen 965, Richardson 2010. As further examples, the HLS, Smooth Streaming, HTTP Live Streaming, Android, AppleTV, Chrome, Chromecast, DASHEncoder, FFmpeg, Internet Explorer, iPhone, Netflix, Quicktime, Helix, Silverlight, VLC Media Player, and YouTube Systems all had adaptive bitrate streaming functionality. Thus, the combination of prior art references identified above would have been obvious because the combinations represent known potential options with a reasonable expectation of success.

Fifth, additional evidence that there would have been a motivation to combine the prior art references identified in Appendix B and/or the admitted prior art, includes, for example, the interrelated teachings of multiple prior art references; the effects of demands known to the design

community or present in the marketplace; the existence of a known problem for which there was an obvious solution encompassed by the Asserted Claims; the existence of a known need or problem in the field of the endeavor at the time of the invention(s); and the background knowledge that would have been possessed by a person having ordinary skill in the art. For example, prior to the alleged priority date of the Asserted Patents, it was well-known that adaptive bitrate streaming, including as disclosed in the prior art, could be used in response to changing network conditions. *See, e.g.*, Myers, Farber, Karczewicz 963, Karczewicz 2001, Karczewicz 2003, Chen 965, Richardson 2010, HLS, Smooth Streaming, HTTP Live Streaming, Android, AppleTV, Chrome, Chromecast, DASHEncoder, FFmpeg, Internet Explorer, iPhone, Netflix, Quicktime, Helix, Silverlight, VLC Media Player, and YouTube. A skilled artisan seeking, for example, to tailor video quality based on available bandwidth would have sought to use the known adaptive bitrate streaming techniques.

Sixth, a person of ordinary skill at the time of the alleged invention had reason to combine or modify one or more of the references identified in Appendix B and/or the admitted prior art, with other prior art references in Appendix B and/or the admitted prior art, in light of the knowledge of a person of ordinary skill in the art at the time of the invention and information in the prior art cited herein. For example, the references in Appendix B and the admitted prior art all generally relate to receiving both basic video image data and supplemental video image data. Thus, they are all directed to features within the same field and one of ordinary skill in the art at the time of the alleged invention would have been motivated to look to these teachings in the field and combine any of these known technologies.

Seventh, many of the references in Appendix B and/or the admitted prior art, have common design features, such as the use of adaptive bitrate streaming, the use of base and enhancement

[redacted]

streams, and the use of intra and inter predicted pictures. *See, e.g.*, Farber at 73 ("multiple bitstreams of different rates," I-frames, P-frames), Karczewicz 963 5:44-48 ("multiple and independent streams of different bandwidth and quality"), 2:7-37 (inter- and intra-coding for group of pictures), Karczewicz 2001 at 1-2 ("multiple and independent streams of different bandwidth and quality," I-pictures, SP-pictures), Karczewicz 2003 at 1-2 (same), Chen 965 7: [0133]-[0138] (Group of Pictures), [0116]-[0121] (intra- and inter-coded pictures), Richardson 2010 at 240-243; *see also* Demircin, Chen, Choi, Cilli, Kesaniemi, Kimoto, Rossato, Ryu, Van Der Schaar, Senbel, Su, Sugiyama, Suh, Tillman, Ugur, Wada. One of ordinary skill in the art would have been motivated and found it obvious to combine these references, with a reasonable expectation of success, because they not only share design elements and take similar approaches with those design elements.

In addition to the exemplary motivations, suggestions, or reasons to combine described above, Defendant identifies additional obviousness combinations and motivations to combine in the sections below. The exemplary motivations, suggestions, or reasons to combine described above and below are not exclusive or exhaustive, and should not be interpreted as indicating that any Asserted Claim is not already anticipated under 35 U.S.C. § 102. Defendant may identify further examples as the case proceeds. In addition, Defendant provides additional reasons to combine various disclosures below.

(i) "basic video image coding data" and "supplementary video image coding data" claim terms

Independent claims 1 and 2 of the '303 patent and their corresponding dependent claims recite limitations directed to basic video image coding data and supplementary video image coding data types (collectively, "Coding Data Limitations").

ACT has asserted that the Coding Data Limitations are met by switching between quality levels when performing adaptive bitrate streaming.

To the extent ACT contends that the admitted prior art or any of the references identified in Appendix B do not disclose the Coding Data Limitations, a person of ordinary skill in the art would have arrived at the purported invention based on the background knowledge, and/or one or more of the prior art references identified in the charts attached as Exhibits. Adaptive Bitrate Streaming was well known and involved nothing more than combining various claimed elements known in the prior art according to known methods to yield a predictable result. Indeed, the ’303 patent cites to Myers, which describes “adaptive streaming of video” by dividing the video into chunks, where each chunk represents five seconds of video and there are multiple versions of each at different video quality and thus bandwidth. Thus, it was well known in the art at the time the application leading to the ’303 patent was filed, that when providing adaptive bitrate steaming, the system will switch between streams of different quality levels (*e.g.* switching between “basic video image coding data” and “supplementary video image coding data”). *See, e.g.*, Myers, Farber, Karczewicz 963, Karczewicz 2001, Karczewicz 2003, Chen 965, Richardson 2010, HLS, Smooth Streaming, HTTP Live Streaming, Android, AppleTV, Chrome, Chromecast, DASHEncoder, FFmpeg, Internet Explorer, iPhone, Netflix, Quicktime, Helix, Silverlight, VLC Media Player, and YouTube.

Alternatively, it was also well known that videos could be provided as scalable video, with a base layer and an enhancement layer (*e.g.* “basic video image coding data” and “supplementary video image coding data”). *See, e.g.*, Demircin, Chen, Choi, Cilli, Kesaniemi, Kimoto, Rossato, Ryu, Van Der Schaar, Senbel, Su, Sugiyama, Suh, Tillman, Ugur, Wada. To the extent ACT contends that the admitted prior art or any of the references identified in Appendix B do not

disclose the Coding Data Limitations, a person of ordinary skill in the art would have also arrived at the purported invention based on the background knowledge, and/or one or more of the prior art references identified in the charts attached as Exhibits. *See, e.g.*, Demircin, Chen, Choi, Cilli, Kesaniemi, Kimoto, Rossato, Ryu, Van Der Schaar, Senbel, Su, Sugiyama, Suh, Tillman, Ugur, Wada. The Scalable Video Codec was well-known and involved nothing more than combining various claimed elements known in the prior art according to known methods to yield a predictable result. For example, Demircin teaches that: "The SVC extension of H.264/MPEG-4 AVC ... is a layered video codec in which the redundancy between layers is exploited by inter-layer prediction mechanisms." Demircin at [0022]. Likewise Su explains that "Some streams could be coded as scalable streams, *e.g.*, using H.264/SVC techniques. These scalable streams could be used for stream switching.") Su at [0067]. This allows streams to accommodate network conditions as this allows "a coding server [to] create more than two streams of coded enhancement layer data around a specific bit rate." Su at [0067].

(ii) "group of pictures" claim terms

Independent claims 1 and 2 of the '303 patent and their corresponding dependent claims recite limitations directed to a "group of pictures" that includes "an intra coded picture and a plurality of inter prediction coded pictures." (collectively, "Group of Pictures Limitations.")

To the extent ACT contends that the admitted prior art or any of the references identified in Appendix B do not disclose the Group of Pictures Limitations, a person of ordinary skill in the art would have arrived at the purported invention based on the background knowledge, and/or one or more of the prior art references identified in the charts attached as Exhibits.

A POSA was motivated to combine a Group of Pictures that includes an intra coded picture and a plurality of inter prediction coded pictures with any encoding or decoding system as disclosed in, *e.g.*, Farber, Karczewicz 963, Karczewicz 2001, Karczewicz 2003, Chen 965,

Richardson 2010. Indeed, the ’303 patent itself admits that coding standards such as HEVC and MPEG-4AVC/H.264 were well known in the art. A POSA would have known that each of these standards organizes images into Groups of Pictures, and that each of these standards uses intra and inter coding for the images in these Groups of Pictures. *See, e.g.*, Farber at 73 (“multiple bitstreams of different rates,” I-frames, P-frames), Karczewicz 963 5:44-48 (“multiple and independent streams of different bandwidth and quality”), 2:7-37 (inter- and intra-coding for group of pictures), Karczewicz 2001 at 1-2 (“multiple and independent streams of different bandwidth and quality,” I-pictures, SP-pictures), Karczewicz 2003 at 1-2 (same), Chen 965 7: [0133]-[0138] (Group of Pictures), [0116]-[0121] (intra- and inter-coded pictures), Richardson 2010 at 240-243, Tillman 6:40-52 (dividing streams into Groups of Pictures with intra and inter frames), Ryu [0037] (same), Ugur at [0181] (same), Choi at [152]-[162] (same), Chen at 8:62-9:8 (Group of Pictures); *see also* Demircin, Cilli, Kesaniemi, Kimoto, Rossato, Van Der Schaar, Senbel, Su, Sugiyama, Suh, Wada.

A POSA would have had a reasonable expectation of success in combining because this concept was well known and involved nothing more than combining various claimed elements known in the prior art according to known methods to yield a predictable result.

(iii) “acquiring basic video image coding data before supplementary video image coding data” claim terms

Independent claims 1 and 2 of the ’303 patent and their corresponding dependent claims recite limitations directed to acquiring basic video image coding data before supplementary video image coding data (collectively, “Timing Limitations”).

ACT has asserted that the Timing Limitations are met when switching between quality levels when performing adaptive bitrate streaming.

To the extent ACT contends that the admitted prior art or any of the references identified in Appendix B do not disclose the Timing Limitations, a person of ordinary skill in the art would

have arrived at the purported invention based on the background knowledge, and/or one or more of the prior art references identified in the charts attached as Exhibits. Adaptive Bitrate Streaming was well known and involved nothing more than combining various claimed elements known in the prior art according to known methods to yield a predictable result. Indeed, the ’303 patent cites to Myers, which describes “adaptive streaming of video” by dividing the video into chunks, where each chunk represents five seconds of video and there are multiple versions of each at different video quality and thus bandwidth. Thus, it was well known in the art at the time the application leading to the ’303 patent was filed, that when providing adaptive bitrate steaming, the system will switch between streams of different quality levels (*e.g.* switching between “basic video image coding data” and “supplementary video image coding data” which that “basic video image coding data” is acquired before “supplementary video image coding data”). *See, e.g.*, Myers, Farber, Karczewicz 963, Karczewicz 2001, Karczewicz 2003, Chen 965, Richardson 2010, HLS, Smooth Streaming, HTTP Live Streaming, Android, AppleTV, Chrome, Chromecast, DASHEncoder, FFmpeg, Internet Explorer, iPhone, Netflix, Quicktime, Helix, Silverlight, VLC Media Player, and YouTube.

Alternatively, it was also well known that when providing scalable video, with a base layer and an enhancement layer (*e.g.* “basic video image coding data” and “supplementary video image coding data”), supplementary video image coding data may be delayed or withheld and then transmitted later. *See, e.g.*, Demircin, Chen, Choi, Cilli, Kesaniemi, Kimoto, Rossato, Ryu, Van Der Schaar, Senbel, Su, Sugiyama, Suh, Tillman, Ugur, Wada. For example, it was well-known that “the available band width of a wireless link based on 802.11 may vary over time and can be unpredictable” and that “[n]etwork congestion can also contribute to time varying and unreliable behavior.” Demircin at [0024]. To address this, a POSA would have been motivated to delay the

transmission of supplementary video data until "the system detects there may be additional channel bandwidth available." Demircin at [0034].

To the extent ACT contends that the admitted prior art or any of the references identified in Appendix B do not disclose the Timing Limitations, a person of ordinary skill in the art would have also arrived at the purported invention based on the background knowledge, and/or one or more of the prior art references identified in the charts attached as Exhibits. *See*, *e.g.*, Demircin, Chen, Choi, Cilli, Kesaniemi, Kimoto, Rossato, Ryu, Van Der Schaar, Senbel, Su, Sugiyama, Suh, Tillman, Ugur, Wada. Delaying the transmission of video image data was also well known and involved nothing more than combining various claimed elements known in the prior art according to known methods to yield a predictable result.

c) Additional Combinations

For at least the reasons described above, it would have been obvious to one of ordinary skill in the art to combine each prior art reference listed in Appendix B with any other reference or references listed in Appendix B along with the knowledge of one of ordinary skill in the art to arrive at the inventions claims in the '303 patent.[12] For example, and without limitation, the Asserted Claims of the '303 patent would have been obvious to one of ordinary skill in the art in view of the following combinations:

Table 4-B: Additional Combinations for the '303 Patent

Patent No. or Title (Primary Inventor/Author)	In Combination with One or More of: (Patent No. or Title (Primary Inventor/Author))
Farber	• Myers • Karczewicz 963

[12] Further, Defendant is actively searching for information regarding at least the systems, devices, and/or inventions listed above in Table 3-B. It would have been obvious to one of ordinary skill in the art to combine each of the prior art references listed in Appendix B with any of the systems identified in Table 3-B. Defendant reserves the right to supplement or amend these contentions as discovery progresses, to the extent permitted by the Court.

	• Karczewicz 2001 • Karczewicz 2003 • Chen 965 • Richardson 2010 • Demircin • Chen • Choi • Cilli • Kesaniemi • Kimoto • Rossato • Ryu • Van Der Schaar • Senbel • Su • Sugiyama • Suh • Tillman • Ugur • Wada • The knowledge of a person of ordinary skill in the art.
Karczewicz 963	• Myers • Farber • Karczewicz 2001 • Karczewicz 2003 • Chen 965 • Richardson 2010 • Demircin • Chen • Choi • Cilli • Kesaniemi • Kimoto • Rossato • Ryu • Van Der Schaar • Senbel • Su • Sugiyama • Suh • Tillman • Ugur • Wada

	• The knowledge of a person of ordinary skill in the art.
Karczewicz 2001	• Myers • Farber • Karczewicz 963 • Karczewicz 2003 • Chen 965 • Richardson 2010 • Demircin • Chen • Choi • Cilli • Kesaniemi • Kimoto • Rossato • Ryu • Van Der Schaar • Senbel • Su • Sugiyama • Suh • Tillman • Ugur • Wada • The knowledge of a person of ordinary skill in the art.
Karczewicz 2003	• Myers • Farber • Karczewicz 963 • Karczewicz 2001 • Chen 965 • Richardson 2010 • Demircin • Chen • Choi • Cilli • Kesaniemi • Kimoto • Rossato • Ryu • Van Der Schaar • Senbel • Su • Sugiyama

	• Suh • Tillman • Ugur • Wada • The knowledge of a person of ordinary skill in the art.
Richardson 2010	• Myers • Farber • Karczewicz 963 • Karczewicz 2001 • Karczewicz 2003 • Chen 965 • Demircin • Chen • Choi • Cilli • Kesaniemi • Kimoto • Rossato • Ryu • Van Der Schaar • Senbel • Su • Sugiyama • Suh • Tillman • Ugur • Wada • The knowledge of a person of ordinary skill in the art.
Demircin	• Myers • Farber • Karczewicz 963 • Karczewicz 2001 • Karczewicz 2003 • Chen 965 • Richardson 2010 • Chen • Choi • Cilli • Kesaniemi • Kimoto • Rossato • Ryu

	• Van Der Schaar • Senbel • Su • Sugiyama • Suh • Tillman • Ugur • Wada • The knowledge of a person of ordinary skill in the art.
Systems Implementing HLS	• Myers • Farber • Karczewicz 963 • Karczewicz 2001 • Karczewicz 2003 • Chen 965 • Richardson 2010 • Demircin • Chen • Choi • Cilli • Kesaniemi • Kimoto • Rossato • Ryu • Van Der Schaar • Senbel • Su • Sugiyama • Suh • Tillman • Ugur • Wada • Any system implementing HLS can be also combined with any other system implementing HLS in addition to the standard itself and any publications describing HLS. • The knowledge of a person of ordinary skill in the art.
Systems Implementing Microsoft Smooth Streaming	• Myers • Farber • Karczewicz 963 • Karczewicz 2001

	• Karczewicz 2003 • Chen 965 • Richardson 2010 • Demircin • Chen • Choi • Cilli • Kesaniemi • Kimoto • Rossato • Ryu • Van Der Schaar • Senbel • Su • Sugiyama • Suh • Tillman • Ugur • Wada • Any system implementing Smooth Streaming can be also combined with any other system implementing Smooth Streaming in addition to the standard itself and any publications describing Smooth Streaming. • The knowledge of a person of ordinary skill in the art.
Systems Implementing MPEG-DASH	• Myers • Farber • Karczewicz 963 • Karczewicz 2001 • Karczewicz 2003 • Chen 965 • Richardson 2010 • Demircin • Chen • Choi • Cilli • Kesaniemi • Kimoto • Rossato • Ryu • Van Der Schaar • Senbel

	• Su • Sugiyama • Suh • Tillman • Ugur • Wada • Any system implementing MPEG-DASH can be also combined with any other system implementing MPEG-DASH in addition to the standard itself and any publications describing MPEG-DASH. • The knowledge of a person of ordinary skill in the art.
Android	• Myers • Farber • Karczewicz 963 • Karczewicz 2001 • Karczewicz 2003 • Chen 965 • Richardson 2010 • Demircin • Chen • Choi • Cilli • Kesaniemi • Kimoto • Rossato • Ryu • Van Der Schaar • Senbel • Su • Sugiyama • Suh • Tillman • Ugur • Wada • Any system implementing HLS can be also combined with any other system implementing HLS in addition to the standard itself and any publications describing HLS. • Any system implementing MPEG-DASH can be also combined

	with any other system implementing MPEG-DASH in addition to the standard itself and any publications describing MPEG-DASH. • The knowledge of a person of ordinary skill in the art.
AppleTV	• Myers • Farber • Karczewicz 963 • Karczewicz 2001 • Karczewicz 2003 • Chen 965 • Richardson 2010 • Demircin • Chen • Choi • Cilli • Kesaniemi • Kimoto • Rossato • Ryu • Van Der Schaar • Senbel • Su • Sugiyama • Suh • Tillman • Ugur • Wada • Any system implementing HLS can be also combined with any other system implementing HLS in addition to the standard itself and any publications describing HLS. • The knowledge of a person of ordinary skill in the art.
Chrome	• Myers • Farber • Karczewicz 963 • Karczewicz 2001 • Karczewicz 2003 • Chen 965 • Richardson 2010 • Demircin

	• Chen • Choi • Cilli • Kesaniemi • Kimoto • Rossato • Ryu • Van Der Schaar • Senbel • Su • Sugiyama • Suh • Tillman • Ugur • Wada • Any system implementing HLS can be also combined with any other system implementing HLS in addition to the standard itself and any publications describing HLS. • Any system implementing Smooth Streaming can be also combined with any other system implementing Smooth Streaming in addition to the standard itself and any publications describing Smooth Streaming. • Any system implementing MPEG-DASH can be also combined with any other system implementing MPEG-DASH in addition to the standard itself and any publications describing MPEG-DASH. • The knowledge of a person of ordinary skill in the art.
Chromecast	• Myers • Farber • Karczewicz 963 • Karczewicz 2001 • Karczewicz 2003 • Chen 965 • Richardson 2010 • Demircin • Chen • Choi

	• Cilli • Kesaniemi • Kimoto • Rossato • Ryu • Van Der Schaar • Senbel • Su • Sugiyama • Suh • Tillman • Ugur • Wada • Any system implementing HLS can be also combined with any other system implementing HLS in addition to the standard itself and any publications describing HLS. • Any system implementing Smooth Streaming can be also combined with any other system implementing Smooth Streaming in addition to the standard itself and any publications describing Smooth Streaming. • Any system implementing MPEG-DASH can be also combined with any other system implementing MPEG-DASH in addition to the standard itself and any publications describing MPEG-DASH. • The knowledge of a person of ordinary skill in the art.
DASHEncoder	• Myers • Farber • Karczewicz 963 • Karczewicz 2001 • Karczewicz 2003 • Chen 965 • Richardson 2010 • Demircin • Chen • Choi • Cilli • Kesaniemi

	• Kimoto • Rossato • Ryu • Van Der Schaar • Senbel • Su • Sugiyama • Suh • Tillman • Ugur • Wada • Any system implementing MPEG-DASH can be also combined with any other system implementing MPEG-DASH in addition to the standard itself and any publications describing MPEG-DASH. • The knowledge of a person of ordinary skill in the art.
FFmpeg	• Myers • Farber • Karczewicz 963 • Karczewicz 2001 • Karczewicz 2003 • Chen 965 • Richardson 2010 • Demircin • Chen • Choi • Cilli • Kesaniemi • Kimoto • Rossato • Ryu • Van Der Schaar • Senbel • Su • Sugiyama • Suh • Tillman • Ugur • Wada • Any system implementing HLS can be also combined with any other system

	implementing HLS in addition to the standard itself and any publications describing HLS. • Any system implementing Smooth Streaming can be also combined with any other system implementing Smooth Streaming in addition to the standard itself and any publications describing Smooth Streaming. • The knowledge of a person of ordinary skill in the art.
Internet Explorer	• Myers • Farber • Karczewicz 963 • Karczewicz 2001 • Karczewicz 2003 • Chen 965 • Richardson 2010 • Demircin • Chen • Choi • Cilli • Kesaniemi • Kimoto • Rossato • Ryu • Van Der Schaar • Senbel • Su • Sugiyama • Suh • Tillman • Ugur • Wada • Any system implementing MPEG-DASH can be also combined with any other system implementing MPEG-DASH in addition to the standard itself and any publications describing MPEG-DASH. • The knowledge of a person of ordinary skill in the art.
iPhone	• Myers • Farber

	• Karczewicz 963 • Karczewicz 2001 • Karczewicz 2003 • Chen 965 • Richardson 2010 • Demircin • Chen • Choi • Cilli • Kesaniemi • Kimoto • Rossato • Ryu • Van Der Schaar • Senbel • Su • Sugiyama • Suh • Tillman • Ugur • Wada • Any system implementing HLS can be also combined with any other system implementing HLS in addition to the standard itself and any publications describing HLS. • The knowledge of a person of ordinary skill in the art.
Netflix	• Myers • Farber • Karczewicz 963 • Karczewicz 2001 • Karczewicz 2003 • Chen 965 • Richardson 2010 • Demircin • Chen • Choi • Cilli • Kesaniemi • Kimoto • Rossato • Ryu • Van Der Schaar

	• Senbel • Su • Sugiyama • Suh • Tillman • Ugur • Wada • Any system implementing MPEG-DASH can be also combined with any other system implementing MPEG-DASH in addition to the standard itself and any publications describing MPEG-DASH. • The knowledge of a person of ordinary skill in the art.
QuickTime	• Myers • Farber • Karczewicz 963 • Karczewicz 2001 • Karczewicz 2003 • Chen 965 • Richardson 2010 • Demircin • Chen • Choi • Cilli • Kesaniemi • Kimoto • Rossato • Ryu • Van Der Schaar • Senbel • Su • Sugiyama • Suh • Tillman • Ugur • Wada • Any system implementing HLS can be also combined with any other system implementing HLS in addition to the standard itself and any publications describing HLS.

	• The knowledge of a person of ordinary skill in the art.
Helix	• Myers • Farber • Karczewicz 963 • Karczewicz 2001 • Karczewicz 2003 • Chen 965 • Richardson 2010 • Demircin • Chen • Choi • Cilli • Kesaniemi • Kimoto • Rossato • Ryu • Van Der Schaar • Senbel • Su • Sugiyama • Suh • Tillman • Ugur • Wada • Any system implementing HLS can be also combined with any other system implementing HLS in addition to the standard itself and any publications describing HLS. • Any system implementing Smooth Streaming can be also combined with any other system implementing Smooth Streaming in addition to the standard itself and any publications describing Smooth Streaming. • Any system implementing MPEG-DASH can be also combined with any other system implementing MPEG-DASH in addition to the standard itself and any publications describing MPEG-DASH. • The knowledge of a person of ordinary skill in the art.
Silverlight	• Myers

	• Farber • Karczewicz 963 • Karczewicz 2001 • Karczewicz 2003 • Chen 965 • Richardson 2010 • Demircin • Chen • Choi • Cilli • Kesaniemi • Kimoto • Rossato • Ryu • Van Der Schaar • Senbel • Su • Sugiyama • Suh • Tillman • Ugur • Wada • Any system implementing Smooth Streaming can be also combined with any other system implementing Smooth Streaming in addition to the standard itself and any publications describing Smooth Streaming. • The knowledge of a person of ordinary skill in the art.
VLC Media Player	• Myers • Farber • Karczewicz 963 • Karczewicz 2001 • Karczewicz 2003 • Chen 965 • Richardson 2010 • Demircin • Chen • Choi • Cilli • Kesaniemi • Kimoto • Rossato

	• Ryu • Van Der Schaar • Senbel • Su • Sugiyama • Suh • Tillman • Ugur • Wada • Any system implementing HLS can be also combined with any other system implementing HLS in addition to the standard itself and any publications describing HLS. • Any system implementing MPEG-DASH can be also combined with any other system implementing MPEG-DASH in addition to the standard itself and any publications describing MPEG-DASH. • The knowledge of a person of ordinary skill in the art.
YouTube	• Myers • Farber • Karczewicz 963 • Karczewicz 2001 • Karczewicz 2003 • Chen 965 • Richardson 2010 • Demircin • Chen • Choi • Cilli • Kesaniemi • Kimoto • Rossato • Ryu • Van Der Schaar • Senbel • Su • Sugiyama • Suh • Tillman • Ugur

	• Wada • Any system implementing HLS can be also combined with any other system implementing HLS in addition to the standard itself and any publications describing HLS. • Any system implementing MPEG-DASH can be also combined with any other system implementing MPEG-DASH in addition to the standard itself and any publications describing MPEG-DASH. • The knowledge of a person of ordinary skill in the art.
Chen 965	• Myers • Farber • Karczewicz 963 • Karczewicz 2001 • Karczewicz 2003 • Richardson 2010 • Demircin • Chen • Choi • Cilli • Kesaniemi • Kimoto • Rossato • Ryu • Van Der Schaar • Senbel • Su • Sugiyama • Suh • Tillman • Ugur • Wada • Any system implementing MPEG-DASH can be also combined with any other system implementing MPEG-DASH in addition to the standard itself and any publications describing MPEG-DASH. • The knowledge of a person of ordinary skill in the art.

[redacted]

d) Secondary Considerations

Proving secondary considerations is ACT's burden. *See, e.g., ZUP, LLC v. Nach Mfg., Inc.*, 896 F.3d 1365, 1373 (Fed. Cir. 2018) ("[A] patentee bears the burden of production with respect to evidence of secondary considerations of nonobviousness."). In interrogatory responses, ACT has purportedly provided evidence of (1) long felt but unresolved needs; (2) commercial success/industry praise; (3) copying; and (4) licensing. However, none of this purported evidence demonstrates nonobviousness. For example, ACT asserts that there was a long-felt need for efficient transmission of video images; however, as discussed in this Section, the use of adaptive bitrate streaming had already solved the problem of transmitting videos in networks with transmission rate changes and was well-known in the prior art. *See, e.g.*, Myers, Farber, Karczewicz 963, Karczewicz 2001, Karczewicz 2003, Chen 965, Richardson 2010. Further, ACT has not shown any nexus between any alleged secondary considerations and the Asserted Claims for any purported commercial success or praise. *See Wyers v. Master Lock Co.*, 616 F.3d 1231, 1246 (Fed. Cir. 2010); *In re Kao*, 639 F.3d 1057, 1068-69, 98 USPQ2d 1799, 1808 (Fed. Cir. 2011) ("Where the offered secondary consideration actually results from something other than what is both claimed and novel in the claim, there is no nexus to the merits of the claimed invention."); *Tokai Corp. v. Easton Enters., Inc.*, 632 F.3d 1358, 1369 (Fed. Cir. 2011) ("If commercial success is due to an element in the prior art, no nexus exists."); *Ormco Corp. v. Align Technology, Inc.*, 463 F.3d 1299, 1312 (Fed. Cir. 2006) ("[I]f the feature that creates the commercial success was known in the prior art, the success is not pertinent."). ACT's purported evidence for commercial success or praise relates to AV1 generally or the use of the prior art method of adaptive bitrate streaming specifically. ACT does not demonstrate that any purported commercial success or praise relates to novel claimed features of the '303 patent. Further, any

purported praise for the use of S-Frames is unrelated to the ’303 patent, as S-Frames, or any type of switching frame, are not claimed by the ’303 patent.

To date, ACT has provided no factual evidence demonstrating copying. Defendant thus reserves the right to supplement its contentions with respect to secondary considerations once ACT has adequately provided evidence for these claims.

“The fact of near-simultaneous invention, though not determinative of statutory obviousness, is strong evidence of what constitutes the level of ordinary skill in the art.” *Ecolochem, Inc. v. S. Cal. Edison Co.*, 227 F.3d 1361, 1379 (Fed. Cir. 2000) (citing *The Int’l Glass Co. v. United States*, 187 Ct. Cl. 376, 408 F.2d 395, 405 (1969)). “[T]he possibility of near simultaneous invention by two or more equally talented inventors working independently, . . . may [] be an indication of obviousness when considered in light of all the circumstances.” *Id.* (citing *Lindeman Maschinenfabrik GmbH v. American Hoist & Derrick Co.*, 730 F.2d 1452, 1460 (Fed. Cir. 1984)); *see also George M. Martin Co. v. Alliance Mach. Sys. Int’l LLC*, 618 F.3d 1284, 1305 (Fed. Cir. 2010) (“Independently made, simultaneous inventions, made within a comparatively short space of time, are persuasive evidence that the claimed apparatus was the product only of ordinary mechanical or engineering skill.”). To the extent that any of the references in these preliminary invalidity contentions is found not to be prior art to the respective Asserted Patents, these references may be relied upon as evidence of near-simultaneous invention favoring obviousness.

To the extent ACT is permitted to introduce contentions and/or evidence concerning secondary considerations in the future, Defendant reserved all rights to rebut those contentions if and when ACT identifies them. In the meantime, Defendant notes the complete lack of any such evidence in the record. Moreover, Defendant further contends that, in any event, the evidence of

obviousness for each asserted claim is so overwhelming that secondary considerations are necessarily insufficient to rebut Defendant's showing. *See, e.g.*, *Ohio Willow Wood Co. v. Alps South, LLC*, 735 F.3d 1333, 1344 (Fed. Cir. 2013) ("[W]here a claimed invention represents no more than the predictable use of prior art elements according to established functions, as here, evidence of secondary indicia are frequently deemed inadequate to establish non-obviousness.").

6. 35 U.S.C. § 112 Invalidity Under P.R. 3–3(d)

Pursuant to P.R. 3–3(d), Defendant contends that the Asserted Claims of the '303 patent are invalid under 35 U.S.C. § 112 because the claims are indefinite, not enabled, or lack written description. Defendant's contentions that the following claims are invalid under 35 U.S.C. § 112 are made in the alternative and do not constitute, and should not be interpreted as, admissions regarding the construction or scope of the claims of the '303 patent, or that any of the claims of the '303 patent are not anticipated or rendered obvious by prior art. The following contentions, made pursuant to P.R. 3–3(d), are subject to revision and amendment pursuant to P.R. 3–6 and Federal Rule of Civil Procedure 26(e) and the Orders of record in this matter to the extent appropriate, *e.g.*, in light of further investigation and discovery regarding the defenses, the Court's construction of the claims at issue, and/or review and analysis of expert witnesses. Defendant offers these contentions in response to ACT's Infringement Contentions and without prejudice to any position it may ultimately take as to any claim construction issues.

a) Indefiniteness under 35 U.S.C. § 112(b)

35 U.S.C. § 112(b) includes a definiteness requirement. *See* 35 U.S.C. § 112(b) ("[T]he specification shall conclude with one or more claims particularly pointing out and distinctly claiming the subject matter which the inventor or joint inventor regards as the invention."). "[A] patent is invalid for indefiniteness if its claims, read in light of the specification delineating the patent, and the prosecution history, fail to inform, with reasonable certainty, those skilled in the

art about the scope of the invention." *Nautilus, Inc. v. Biosig Instruments, Inc.*, 134 S. Ct. 2120, 2124 (2014).

The Asserted Claims are invalid as indefinite under 35 U.S.C. § 112(b), for failing to particularly point out and distinctly claim the subject matter which the applicants regard as their invention. The specification of the '303 patent provides no objective standard by which one of ordinary skill in the art could determine the meaning of the asserted claim elements. In particular, at least the following claim terms are indefinite because they fail to particularly point out and distinctly claim the subject matter which the applicants regarded as their alleged inventions.[13]

For example, to the extent that ACT asserts that switching between quality levels when performing adaptive bitrate streaming meets their limitations, Claims 1 and 2 are invalid for indefiniteness as to the phrases "basic video image coding data" and "supplementary video image coding data" because this term when read in light of the specification delineating the patent and the prosecution history, fail to inform, with reasonable certainty, those skilled in the art about the scope of the invention. For example, the limitation fails to inform a person of ordinary skill what makes certain data "basic" and how "supplementary video image coding data" will serve to "supplement" the basic video image coding data. Claims 1 and 2 are also invalid for indefiniteness as to the phrases "reconstructing video image coding data from the basic video image coding data and the supplementary video image coding data" because this term when read in light of the specification delineating the patent and the prosecution history, fail to inform, with reasonable certainty, those skilled in the art about the scope of the invention. For example, the limitation fails to inform a person of ordinary skill how "reconstruction" can occur if the basic and supplementary video image coding data are separate streams of data.

[13] Dependent claims are also invalid as being dependent upon a base claim that is indefinite under 35 U.S.C. § 112, second paragraph.

The following limitations recited in the '303 patent Asserted Claims are indefinite in whole, in part or in combination, as summarized below:[14]

Table 5-B: Indefinite Terms under 35 U.S.C. § 112(b) the '303 Patent

Term	Relevant Claim(s)
receiving basic video image coding data;	1
decoding the received basic video image coding data so as to reproduce a video image;	1
receiving supplementary video image coding data including a supplementary hierarchical picture whose coding order and display order are earlier by a factor of a group of pictures including an intra coded picture and a plurality of inter prediction coded pictures than those of a basic hierarchical picture included in the basic video image coding data, a basic hierarchy and a supplementary hierarchy being set in units of the group of pictures;	1
acquiring basic video image coding data received before supplementary video image coding data that has been received at the moment;	1
reconstructing video image coding data from the basic video image coding data and the supplementary video image coding data.	1
acquiring the transmission rate of a network;	2
setting a transmission structure including a basic hierarchy and a supplementary hierarchy, the basic hierarchy and the supplementary hierarchy being set in units of a group of pictures including an intra coded picture and a plurality of inter prediction coded pictures;	2
transmitting basic video image coding data of the basic hierarchy, wherein the first memory unit is further configured to store supplementary video image coding data of the supplementary hierarchy;	2
transmitting the supplementary video image coding data stored in the memory unit;	2

[14] Listed claims also include all Asserted Claims dependent thereon, even if those claims are not individually listed.

controlling the transmission of the supplementary video image coding data according to the transmission rate,	2
receiving the basic video image coding data;	2
decoding the received basic video image coding data so as to reproduce a video image;	2
receiving the supplementary video image coding data including a supplementary hierarchical picture having coding order and display order that are earlier by a factor of the group of pictures than those of a basic hierarchical picture included in the basic video image coding data;	2
acquiring basic video image coding data received before supplementary video image coding data that is currently received;	2
reconstructing video image coding data from the basic video image coding data and the supplementary video image coding data.	2
basic video image coding data	1, 2
supplementary video image coding data	1, 2
basic hierarchy	1, 2
supplementary hierarchy	1, 2
supplementary hierarchical picture	1, 2
basic hierarchical picture	1, 2
reconstructing	1, 2

b) Lack of Enablement and/or Lack of Written Description

35 U.S.C. § 112(a), includes an enablement requirement. *See* 35 U.S.C. § 112(a) ("The specification shall contain a written description . . . of the manner and process of making and using [the invention] in such full, clear, concise and exact terms as to enable any person skilled in the art to which it pertains, or with which it is most nearly connected, to make and use the same.").

To satisfy the enablement requirement of 35 U.S.C. § 112(a) the disclosure "must teach those skilled in the art how to make and use the full scope of the claimed invention without 'undue experimentation.'" *Genentech, Inc. v. Novo Nordisk, A/S*, 108 F.3d 1361, 1365 (Fed. Cir. 1997) (citations omitted). Moreover, "[i]t is the specification, not the knowledge of one skilled in the art, that must supply the novel aspects of [the] invention in order to constitute adequate enablement."

Genentech, 108 F.3d at 1366. The Federal Circuit has enumerated several factors to consider in determining whether a disclosure would require "undue experimentation": (1) the quantity of experimentation necessary; (2) the amount of direction or guidance presented; (3) the presence or absence of working examples; (4) the nature of the invention; (5) the state of the prior art; (6) the relative skill of those in the art; (7) the predictability or unpredictability of the art; and (8) the breadth of the claims. *In re Wands*, 858 F.2d 731, 737 (Fed. Cir. 1988).

To satisfy the written description requirement, the description must "clearly allow persons of ordinary skill in the art to recognize that [the inventor] invented what is claimed." *Ariad Pharmaceuticals, Inc. v. Eli Lilly and Co.*, 598 F.3d 1336, 1351 (Fed. Cir. 2010) (internal citation omitted). In other words, the test for sufficiency is whether the disclosure of the application relied upon reasonably conveys to those skilled in the art that the inventor had possession of the claimed subject matter as of the filing date. *Id.* The test requires an objective inquiry into the four corners of the specification from the perspective of a person of ordinary skill in the art. Based on that inquiry, the specification must describe an invention understandable to that skilled artisan and show that the inventor actually invented the invention claimed. "Whether the written description requirement is satisfied is a fact-based inquiry that will depend on the nature of the claimed invention, and the knowledge of one skilled in the art at the time an invention is made and a patent application is filed." *Carnegie Mellon Univ. v. Hoffmann La Roche Inc.*, 541 F.3d 1115, 1122 (Fed. Cir. 2008). Actual "possession" or reduction to practice outside of the specification is not enough. Rather, as stated above, it is the specification itself that must demonstrate possession. A description that merely renders the invention obvious does not satisfy the requirement. *Lockwood v. Am. Airlines*, 107 F.3d 1565, 1571-72 (Fed. Cir. 1997).

All Asserted Claims of the ’303 patent are invalid for lack of enablement and/or lack written description because they do not contain an enabling or sufficient disclosure of the specific hardware structure, reference software, source code, and/or other specific details of the invention that would enable a person skilled in the art to practice the claimed invention without undue experimentation.

For example, to the extent that ACT asserts that switching between quality levels when performing adaptive bitrate streaming meets their limitations, Claims 1 and 2 fail to satisfy the requirements of 35 U.S.C. § 112(1) because the specification fails to provide an enabling disclosure of “basic video image coding data” and “supplementary video image coding data” where the two streams of data can be independently displayed. Therefore, the specification fails to provide a written description of using “basic video image coding data” and “supplementary video image coding data” as recited in the above-listed claims or teach a person of ordinary skill how to make or use the same. Claims 1 and 2 also fail to satisfy the requirements of 35 U.S.C. § 112(1) because the specification fails to provide an enabling disclosure of “reconstructing video image coding data from the basic video image coding data and the supplementary video image coding data” when the two streams of data can be independently displayed. Therefore, the specification fails to provide a written description of using the of “reconstructing video image coding data from the basic video image coding data and the supplementary video image coding data” as recited in the above-listed claims or teach a person of ordinary skill how to make or use the same.

The following limitations recited in the ’303 Patent Asserted Claims are invalid in whole, in part or in combination, as summarized below:[15]

Table 6-B: Invalid Terms under 35 U.S.C. § 112(a) for the ’303 Patent

[15] Listed claims also include all Asserted Claims dependent thereon, even if those claims are not individually listed.

[redacted]

Term	Relevant Claim(s)
receiving basic video image coding data;	1
decoding the received basic video image coding data so as to reproduce a video image;	1
receiving supplementary video image coding data including a supplementary hierarchical picture whose coding order and display order are earlier by a factor of a group of pictures including an intra coded picture and a plurality of inter prediction coded pictures than those of a basic hierarchical picture included in the basic video image coding data, a basic hierarchy and a supplementary hierarchy being set in units of the group of pictures;	1
acquiring basic video image coding data received before supplementary video image coding data that has been received at the moment;	1
reconstructing video image coding data from the basic video image coding data and the supplementary video image coding data.	1
acquiring the transmission rate of a network;	2
setting a transmission structure including a basic hierarchy and a supplementary hierarchy, the basic hierarchy and the supplementary hierarchy being set in units of a group of pictures including an intra coded picture and a plurality of inter prediction coded pictures;	2
transmitting basic video image coding data of the basic hierarchy, wherein the first memory unit is further configured to store supplementary video image coding data of the supplementary hierarchy;	2
transmitting the supplementary video image coding data stored in the memory unit;	2
controlling the transmission of the supplementary video image coding data according to the transmission rate,	2
receiving the basic video image coding data;	2
decoding the received basic video image coding data so as to reproduce a video image;	2
receiving the supplementary video image coding data including a supplementary hierarchical picture having coding order and display order that are earlier by a factor of the	2

group of pictures than those of a basic hierarchical picture included in the basic video image coding data;	
acquiring basic video image coding data received before supplementary video image coding data that is currently received;	2
reconstructing video image coding data from the basic video image coding data and the supplementary video image coding data.	2
basic video image coding data	1, 2
supplementary video image coding data	1, 2
basic hierarchy	1, 2
supplementary hierarchy	1, 2
supplementary hierarchical picture	1, 2
basic hierarchical picture	1, 2
reconstructing	1, 2

C. U.S. Patent No. 10,218,995

1. Alleged Priority Date

A "patent may only claim priority to an earlier application if the earlier application fulfills the requirements of § 112, first paragraph, which requires, in part, that the application 'shall contain a written description of the invention, and of the manner and process of making and using it, in such full, clear, concise, and exact terms as to enable any person skilled in the art to which it pertains, or with which it is most nearly connected, to make and use the same.'" *Chiron Corp. v. Genentech, Inc.*, 363 F.3d 1247, 1253 (Fed. Cir. 2004). ACT has failed to establish that any Asserted Claim is entitled to a priority date based on the filing of any earlier application. Defendant reserves its right to identify additional bases for this contention in response to ACT's subsequent arguments and positions, any amendments that ACT makes to its own contentions, the Court's claim construction, or information uncovered during further discovery.

Defendant does not agree, and therefore disputes, that the Asserted Claims of the '995 patent are entitled to the priority date asserted by ACT. Additionally, ACT provides no contention nor any evidence in its infringement contentions demonstrating that the '995 patent was invented

earlier than the effective filing date of its earliest foreign application, Japan Patent Application No. P2008-142433, filed May 30, 2008. *See* Infringement Contentions at 8. Thus, the ’995 patent is not entitled to any date of invention earlier than the effective filing date of its earliest foreign application, which ACT alleges is May 30, 2008. Defendant’s disclosure of prior art is premised on the alleged priority date as identified in Plaintiff’s Infringement Contentions. Defendant contends Plaintiff is not entitled to the alleged priority date and reserves the right to modify, amend, or supplement its invalidity contentions with additional prior art references if any Asserted Claim is shown to not be entitled to the respective alleged priority date. Defendant objects to ACT alleging or providing evidence of any earlier date of invention; all such evidence is fully within ACT’s control and to the extent ACT claims an earlier priority date, it needed to do so in its infringement contentions. To the extent ACT is able and permitted to assert an earlier date of invention for any of the Asserted Patents, Defendant may modify, amend, and/or supplement these Invalidity Contentions, including, but not limited to its identification and production of additional prior art.

2. General State of the Art at the Time of the Alleged Invention

The claimed invention of the ’995 patent is directed to using super resolution enlargement when encoding and decoding video.

The prior art identified below (including the “References Cited” on the face of the ’995 patent) may provide background and context pertinent to the teachings, and interpretation of, the prior art referenced by the claim charts.

For example, the ’995 patent admits that super resolution enlargement was well known in the art at the time the application leading to the ’995 patent was filed, including citations to Sung, Tom, Schulz, and Stark. Thus, it was well known in the art at the time the application leading to the ’995 patent was filed, that super resolution enlargement can be used to enhance coding of low

resolution videos. *See, e.g.*, Sung, Tom, Schulz, Stark, Martins, Sesai, Fogg 236, Nagumo 519, Schreiber, Wedi 380, Suzuki 952, Margulis 807, Keren.

In addition, the ’995 patent admits that hierarchical encoding with a base layer and enhancement layers was well known in the art at the time the application leading to the ’995 patent was filed, including citations to standards including MPEG-4 SVC. Thus, it was well known in the art at the time the application leading to the ’995 patent was filed, that the encoding and decoding of such base and enhancement layers may involve resolution conversion to certain desired resolutions, and that such conversion may include super resolution enlargement. *See, e.g.*, Sakazume, Sung, Tom, Schulz, Stark, Martins, Segall, Sesai, Fogg 236, Nagumo 519, Schreiber, Wedi 380, Suzuki 952, Margulis 807, Ong, He, Wang, Yagasaki, Nakemura, Schwarz, Tsai, Garrido 853, Lim 000, Garrido 868, Slinger, Gu, Lim 206, Kondo, Hannuksela. In particular, it was understood that resolution conversion could be used to generate any output resolution required. *See, e.g.*, Martins.

In addition to the prior art admitted by the ’995 patent, the references that anticipate and/or render obvious one or more Asserted Claims are identified in the claim charts of Exhibits C01-C40 (collectively, “Appendix C”) and in Section III.C.3, *infra*.

3. Disclosure of Prior Art References (P.R. 3-3(a))

Pursuant to P.R. 3-3(a), Defendant identifies at least the following prior art now known to it to anticipate and/or render obvious one or more of the Asserted Claims of the ’995 patent, either expressly, implicitly, or inherently as understood by a person having ordinary skill in the art.

a) Prior Art Patents, Patent Applications, And Publications

In addition to the prior art admitted by the ’995 patent, the following patents, patent applications, and publications are prior art to the ’995 patent under at least 35 U.S.C. §§ 102(a), (b), (e), and/or (g), and anticipate and/or render obvious the Asserted Claims of the ’995 patent:

Table 1-C: Prior Art Patents and Patent Applications for the '995 Patent

Patent or Patent Application No.	Country of Origin	Date of Issue (if Issued Patent)	Exhibit[16]	Anticipates	Renders Obvious
US 7,302,002B2 ("Yagasaki")	United States	11/27/2007	C1		X
US 7,496,236B2 ("Fogg 236")	United States	2/24/2009	C2		X
US 7,853,088 ("Sakazume")	United States	12/14/2010	C3		X
US6968005 (US20020021752A1) ("Hannuksela")	United States	2/21/2002	C4		X
US20020063807A1 ("Margulis 807")	United States	5/30/2002	C5		X
US7253831 (US20020092030A1) ("Gu")	United States	7/11/2002	C6		X
US20040017853A1 ("Garrido 853")	United States	1/29/2004	C7		X
US7310373 (US20040151248A1) ("Kondo")	United States	8/5/2004	C8		X
US20050019000A1 ("Lim 000")	United States	1/27/2005	C9		X
US7206347 (US20050058206A1) ("Lim 206")	United States	3/17/2005	C10		X
US20060126952A1 ("Suzuki 952")	United States	6/15/2006	C11		X
US 20080117975A1 ("Sasai")	United States	5/22/2008	C12		X
US20080137753 ("He")	United States	6/12/2008	C13		X
US 20080175519 ("Nagumo 519")	United States	7/24/2008	C14		X
US20090274380A1 ("Wedi 380")	United States	11/5/2009	C15		X
EP 1811786A1 ("Wang")	EU	7/25/2007	C16		X

[16] Exhibit numbers have only been listed for primary references. Additional prior art references that disclose and render obvious certain elements are described in Sections III.C.4-.5 *infra*, as well as the discussion of the general state of the art in Section III.C.2, *supra*.

JP 2005123913A (“Nakamura”)	United States	5/12/2005	C17		X
JP 2007316161A (“Ong”)	Japan	12/6/2007	C18		X
WO2003102868A2 (“Garrido 868”)	United States	12/11/2003	C19		X
WO2007091049A1 (“Slinger”)	United States	8/16/2007	C20		X
US 5,122,873A (“Golin”)	United States	6/16/1992			X
US 5,677,735A (“Ueno”)	United States	10/14/1997			X
US5926225 (“Fukuhara”)	United States	7/20/1999			X
US 6,173,013 B1 (“Suzuki 013”)	United States	1/9/2001			X
US6205177 (“Girod 177”)	United States	3/20/2001			X
US6249318 (“Girod 318”)	United States	6/19/2001			X
US 6,340,994B1 (“Margulis 994”)	United States	1/22/2002			X
US 6,393,152B2 (“Takahashi”)	United States	5/21/2002			X
US 6,400,768 (B1) (“Nagumo 768”)	United States	6/4/2002			X
US6560284 (“Girod 284”)	United States	5/6/2003			X
US 6,563,876 (“Boyce 876”)	United States	5/13/2003			X
US 6.621.865 (“Yu”)	United States	9/16/2003			X
US 6,690,724B1 (“Kadono”)	United States	2/10/2004			X
US6807231 (“Wiegand”)	United States	10/19/2004			X
US 6,975,768B2 (“Yamaguchi”)	United States	12/13/2005			X
US 7,379,496 B2 (“Holcomb”)	United States	5/27/2008			X
US 7,864,219 B2 (“Shimauchi”)	United States	1/4/2011			X
US 8,019,169B2 (“Kondo 169”)	United States	9/13/2011			X
US 20050195900A1 (“Han 900”)	United States	9/8/2005			X

US 2005/0196054 ("Kirihara")	United States	9/8/2005			X
US 2005/0259752 ("Iwata")	United States	11/24/2005			X
US 20060114999A1 ("Han 999")	United States	6/1/2006			X
US 2006/0126952 ("Suzuki 952")	United States	1/15/2006			X
US 20060133677A1 ("Park")	United States	6/22/2006			X
US 20060146931A1 ("Boyce")	United States	7/6/2006			X
US 20070217519 A1 ("Murayama")	United States	9/20/2007			X
US 20070253486A1 ("Jeon")	United States	11/1/2007			X
US 20070277078A1 ("Yamanashi")	United States	11/29/2007			X
US 20080043832 ("Barkley")	United States	2/21/2008			X
US 2008031328A1 ("Kimoto")	United States	2/7/2008			X
US 2008095450A1 ("Kirenko")	United States	4/24/2008			X
US 60/105,926 (Fogg 926)	United States	10/15/2002			X
US 60/123,300 (Fogg 300)	United States	10/15/2002			X
EP 1837826A1 ("Wedi 826")	EU	9/26/2007			X

Table 2-C: Prior Art Publications for the '995 Patent

Title	Date of Publication	Author/ Publisher	Exhibit [17]	Anticipates	Renders Obvious
Martins B, Forchhammer S, "A unified approach to restoration, deinterlacing and resolution enhancement in decoding MPEG-2 video," IEEE Trans. on CSVT, Vol. 12, No. 9, pp.	2002	Martins	C21		X

[17] Exhibit numbers have only been listed for primary references. Additional prior art references that disclose and render obvious certain elements are described in Sections III.C.4-.5 *infra*, as well as the discussion of the general state of the art in Section III.C.2, *supra*.

803-811, Sep. 2002 (“Martins”)					
Schreiber W F, Knapp C F, Kay N D, Synthetic Highs – An Experimental TV Bandwidth Reduction System, J. SMPTE, Vol. 6 (“Schreiber”)	1958	Schreiber	C22		X
Schwarz – Overview of the scalable video coding extension of the H. 264 AVC standard (“Schwarz”)	2007	Schwarz	C23		X
Segall, Spatial Scalability Within the H.264/AVC Scalable Video Coding Extension, IEEE Transactions on Circuits and Sys. for Video Tech., Vol. 17, No. 9, Sept. 2007 (“Segall”)	2007	Segall	C24		X
Tsai R Y, Huang T S, Multiframe image restoration and registration, Advances in Computer Vision and Image Processing, Vol. 1, T. S. Huang, ed., Jai Press, pp. 317-319, 1984 (“Tsai”) (available for inspection)	1984	Tsai	C25		X
ITU-T Rec. H.263 (02/98) (“H.263”)	Feb-98		C26		X
ITU-T Rec. H.264 (05/2003) (“H.264”)	May-03		C27		X
Altunbasak, Super-Resolution Still and Video Reconstruction from MPEG-Coded Video (“Altunbasak”)	2002	Altunbasak			X
H. Andrews and B. Hunt, Digital Image Restoration. Englewood Cliffs, NJ: Prentice-Hall, 1977 (“Andrews”) (available for inspection)	1977	Andrews			X
Sean Borman, Robert Stevenson, Spatial	1998	Borman			X

Resolution Enhancement of Low-Resolution Image Sequences A Comprehensive Review with Directions for Future Research, Lab. Image and Signal Analysis, University of Notre Dame, Tech. Rep., July 8, 1998 ("Borman")					
Chen D, Schultz R R, Extraction of high-resolution video stills from MPEG image sequences, in Proc. 1998 IEEE Int. Conf. Image Proc., Vol. 2, pp. 465-469, Oct. 1998 ("Chen-1998")	1998	Chen			X
Clark J, Palmer M, Lawrence P, A Transformation Method for the Reconstruction of Functions from Nonuniformly Spaced Samples, IEEE Trans. on ASSP, Vol. 33, No. 4, Oct. 1985 ("Clark")	1985	Clark			X
Dubois, Impact of scan conversion methods on the performance of scalable video coding ("Dubois")	1995	Dubois			X
Erickson K J, Schultz R R, MPEG-1 super-resolution decoding for the analysis of video still images, 4th IEEE Southwest Symp. on Im. Anal. and Interp., Apr. 2000 ("Erickson")	2000	Erickson			X
Galatsanos N R, Chin R T, Digital restoration of multichannel images, pp. 415 – 421, Mar. 1989 ("Galatsanos")	1989	Galatsanos			X
Gaubatz M, A. Vosoughi A, Scaglione A, Hemami S S, Efficient, Low Complexity Encoding of Multiple,	2006	Gaubatz			X

Blurred Noisy Downsampled Images Via Distributed Source Coding Principles, ("Gaubatz")					
Gunturk B K, Altunbasak Y, Mersereau R M, Multiframe resolution-enhancement methods for compressed video, IEEE Sig. Proc. Lett., Vol. 9, pp. 170-174, Jun. 2002 ("Gunturk")	2002	Gunturk			X
Gunturk, Super-Resolution Reconstruction of Compressed Video Using Transform-Domain Statistics ("Gunturk 2004")	2004	Gunturk 2004			X
Haskell et al., Digital Video: An Introduction to MPEG 2, Chapter 9 ("Haskell")	2002	Haskell			X
Huang, Advances in the Scalable Amendment of H.264/AVC ("Huang 2007")	2007	Huang			X
Hunt B R, Kubler O, Karhunen-Loève multispectral image restoration, part I-Theory, pp. 592 – 600, Jun. 1984 ("Hunt-1984")	1984	Hunt			X
Hunt B R, Super-Resolution of Images-Algorithms, Principles, Performance, Intl, Jnl. of Imaging Sys. and Technol., Vol. 6, pp. 297-304, Wiley, 1995, Oct. 1995 ("Hunt 1995")	1995	Hunt			X
Irani M, Peleg S, Improving Resolution by Image Registration, Graphical Models and Im. Proc., Vol. 53, No. 3, pp. 231-239, May 1991IEEEICASS P, May 2006 ("Irani")	2006	Irani			X

Katsaggelos et al., Super Resolution of Images and Video (“Katsaggelos”)	2007	Katsaggelos			X
Keren D, Peleg S, Brada R, Image sequence enhancement using sub-pixel displacements, Proc. CVPR ‘88- The Comp. Soc. Conf. on Computer Vision and Pattern Recognition, Jun. 1988 (“Keren”)	1988	Keren			X
Kim S P, Bose N K, Reconstruction of 2-D Bandlimited Discrete Signals from Nonuniform Samples, IEE Proc., Vol. 137, No. 3, pp. 197 – 204, Jun. 1990 (“Kim”)	1990	Kim			X
Kramer P, O. Hadar, Benois-Pineau J, Domenger J-P, Use of Motion Information in Super-Resolution Mosaicing, ICIP, Oct. 2006 (“Kramer”)	2006	Kramer			X
Mahmood A, et al, Applied Multi-Dimensional Fusion, British Computer Society, Oxford U Press, 2007 (“Mahmood”)	2007	Mahmood			X
Macchiavello, Motion-Based Side-Information Generation for a Scalable Wyner-Ziv Video Coder (“Macchiavella”)	2007	Macchiavell o			X
Ohm, Advances in Scalable Video Coding (“Ohm”)	2005	Ohm			X
Pandit, An extension of the reduced resolution update to complexity constrained spatial scalable video coding, Multimedia Systems and Applications VIII,	2005	Pandit			X

Volume 6015, pp. 65-76, Oct. 2005 (“Pandit”)					
Papoulis A, Generalized Sampling Expansion, IEEE Trans. on Ccts. and Sys., Vol. 24, No. 11, Nov. 1977 (“Papoulis”)	1977	Papoulis			X
“Super-Resolution Image Reconstruction: A Technical Overview, Sung Cheol. Park, Min Kyu Park, and Moon Gi Kang, IEEE Signal Proc. Magazine, Vol. 26, No. 3, pp. 21-36, 2003” (“Park”)	2003	Park			X
Patti A J, Sezan M I, Tekalp M. Superresolution video reconstruction with arbitrary sampling lattices and nonzero aperture time. IEEE Trans. on Im. Proc., Vol. 6, No. 8, pp. 10 (“Patti”)	1997	Patti			X
Rav-Acha A, Peleg S, Restoration of multiple images with motion blur in different directions, Proc. Fifth IEEE Workshop on Applications of Computer Vision, Dec. 2000 (“Rav-Acha”)	2000	Rav-Acha			X
Reichenbach S E, Li J, Restoration and reconstruction from overlapping images for multi-image fusion, IEEE Trans. on Geoscience and Remote Sensing, Vol. 39, No. 4, Apr. 2001 (“Reichenbach”)	2001	Reichenbac h			X
E.G. Richardson, H.264 and MPEG-4 Video Compression, 2003 (“Richardson”)	2003	Richardson			X
Schultz R R, Stevenson R L, Extraction of high-resolution frames from	1997	Schultz			X

video sequences, IEEE Trans. on Im. Proc., Vol. 5, No. 6, Jun. 199664-1078, Aug. 1997 (“Schultz”)					
Segall, Prediction of High Resolution Data from Coded Low Resolution Grid within the Context of SVC(“Segall 2006”)	2006	Segall			X
Sikora, MPEG-1 and MPEG-2 Digital Video Coding Standards, Digital Consumer Electronics Handbook (“Sikora”)	1997	Sikora			X
Sikora, MPEG Digital Video-Coding Standards, IEEE Signal Processing Magazine, Sep. 1997 (“Sikora 2”)	1997	Sikora			X
Stark H, Oskoui P, High-resolution image recovery from image-plane arrays, using convex projections, Jnl. Opt. Soc. Am., Vol. 6, No. 11, Nov. 1989 (“Stark”)	1989	Stark			X
Tom B C, Katsaggelos A K, Reconstruction of a high-resolution image by simultaneous registration, restoration, and interpolation of low-resolution images, Proc. ICIP, Vol. 3 (“Tom”)	1995	Tom			X
Vetro, Video Transcoding Architectures and Techniques: An Overview (“Vetro”)	2003	Vetro			X
Wan, Adaptive format conversion for scalable video coding, Proceedings of the SPIE, Volume 4472, p. 390-401, Dec. 2001 (“Wan”)	2001	Wan			X
MPEG 95/0340 (“MPEG-95/0340”)	1995				X

MPEG 96/0654 (“MPEG-96/0654”)	1996				X
H.263 - q15c11 (“H.263-q15c11”)	1997				X
H.263 - 200501I (“H.263-Jan2005”)	2005				X
Adobe Delivers Flash Player 9 with H.264 Video Support (“Westgate”)	12/2007				X
List of codecs supported by Flash Player (“FP Codecs”)	8/2009				X
CoreCodec.com (“CoreCodec”)	Feb-06				X
CoreAVC Video Codec Decoder Editions (“CoreAVC”)	6/7/2006				X
Horizon Semiconductor’s HD DVD/Blu-ray decoder on a chip (“Kim 2007”)	10/2/2007	Kim			X
x264 guide (“x264 Guide”)	Apr-05				X
Encoding with the x264 codec (“x264”)	Dec-05				X
A Generalized Hypothetical Reference Decoder for H.264/AVC (“Ribas-Corbera”)	Jul-03	Ribas-Corbera			X
FFmpeg Documentation (“FFmpeg Documentation”)	Aug-08				X
Welcome to the datatype project! (“Helix 2006”)	2006				X
MSM7200 Chipset Solution (“MSM7200”)	2006				X
Touch Phone User Manual (“HTC Touch Dual”)	2007				X
HTC Touch Cruise User Manual (“HTC Touch Cruise”)	2008				X
HTC Pocket PC User Manual (“HTC Pocket PC”)					X
git.videolan.org/ffmpeg.git/commitdiff (Dec. 29, 2005) (“VLC commitdiff”)	Dec-05				X
VLC User Guide (“VLC Guide”)	2003				X

b) Prior Art Systems

Numerous systems are prior art to the '995 patent under at least 35 U.S.C. §§ 102(a), (b), (e), and/or (g), and anticipate and/or render obvious the Asserted Claims of the '995 patent. These systems also include physical implementations of prior art patents, patent applications, and publications identified herein that were known, made, used, sold, offered for sale, or imported into this country prior to the effective filing dates of the '995 patent, including those identified above and discussed in the sections below. Defendant's reference to a particular product, device, or software program in these contentions should be interpreted as a reference to the system itself as well as to any corresponding patents, publications, or product literature relating to the cited system. Although Defendant's investigation continues, information available to date indicates that numerous systems, including the H.264 System cited in Appendix C, were (1) known or used in this country before the alleged invention of the claimed subject matter of the Asserted Claims, (2) in public use and/or on sale in this country more than one year before the priority dates of the '995 patent, and/or (3) invented by another who did not abandon, suppress, or conceal, before the alleged invention of the claimed subject matter of the Asserted Claims.

In addition Defendant may rely on systems or other embodiments of the subject matter described in each of the references described above. Each of the references cited in support of the above systems may also be prior art individually under 35 U.S.C. §§ 102(a), (b), (e), and/or (g).

As discovery is ongoing, Defendant continues to investigate these items and may amend or supplement these contentions to include additional information or documents regarding such products and/or systems.

Table 3-C: Prior Art Systems and Inventions for the '995 Patent

Name of System or Invention	Date of Sale/Offer for Sale /Public Use /Known by Others	Exhibit	Anticipates	Renders Obvious

Systems Implementing H.263	2/1998	C28		X
Systems Implementing H.264	5/2003	C29		X
Adobe Flash Player	12/2007	C30		X
CoreAVC	2/2006	C31		X
FFmpeg	4/2006	C32		X
Helix	2006	C33		X
Hz7220	10/2007	C34		X
HTC	2007	C35		X
HRD	7/2003	C36		X
MSM7200	2006	C37		X
Quicktime	3/2005	C38		X
VLC Media Player	12/2005	C39		X
x264	4/2005	C40		X
MPEG-2 SAVI Decoder, Hyundai Electronics	1995			X
Apple iPhone	2007			X
Apple TV	2007			X
VidyoRoom	2008			X
VidyoPortal	2008			X
VidyoDesktop	2008			X
Cisco Webex Platform	2007			X
Polycom HDX4000	2007			X
RADVISION Interactive Video Platform	2006			X
Click to Meet™	2006			X
SCOPIA™	2006			X
NVIDIA GeForce 8600	2007			X
Radeon X1000-series	2005			X
ATI Technologies Unified Video Decoder	2008			X
STI7200	2007			X
Apple Mac OS X v10.4	2005			X
Microsoft Windows Vista	2006			X
Microsoft Xbox 360	2007			X
Broadcom BCM7411	2004			X
Conexant CX2418X	2004			X

Sony Playstation Portable	2005			X
Xbox Media Center (XBMC) / Kodi	2002			X
Sony Playstation	1994			X
Sony Playstation 2	2000			X
Sony Playstation Portable (PSP)	2004			X
Microsoft Xbox	2001			X
Microsoft Xbox 360	2005			X
Roku PhotoBridge HD1000 Product ("Roku Product")	2003			X
Roku PhotoBridge HD1000 System ("Roku System")	2003			X
Systems Implementing MPEG-2				X
Systems Implementing MPEG-4				X
Systems Implementing H.262				X
Systems Implementing VC1				X
Systems Implementing DivX				X
Systems Implementing Xvid				X

4. Anticipation and Obviousness Under P.R. 3-3(b) and (c)

35 U.S.C. § 102(a) provides that "[a] person shall be entitled to a patent unless . . . the invention was known or used by others in this country, or patented or described in a printed publication in this or a foreign country, before the invention thereof by the applicant for patent . . . ." To be anticipatory, a reference must describe, either expressly or inherently, each and every limitation and enable one of skill in the art to practice an embodiment of the claimed invention without undue experimentation. *Stored Value Solutions, Inc. v. Card Activation Technologies, Inc.*, 2012 WL 6097674, at *8 (Fed. Cir. 2012). A reference may anticipate inherently if a claim limitation that is not expressly disclosed "is necessarily present, or inherent, in the single

anticipating reference." *In re Aoyama*, 656 F.3d 1293, 1337 (Fed. Cir. 2011) (quoting *Schering Corp. v. Geneva Pharm., Inc.*, 339 F.3d 1373, 1377 (Fed. Cir. 2003)); *Akamai Technologies, Inc. v. Cable & Wireless Internet Services, Inc.*, 344 F.3d 1186, 1195 (Fed. Cir. 2003) (finding hierarchical DNS servers inherent in any Internet system).

Each of the Asserted Claims of the '995 patent is anticipated and/or rendered obvious by prior art. Pursuant to P.R. 3–3(b), Defendant identifies the prior art references that anticipate or render obvious an Asserted Claim in the claim charts of Appendix C, which are hereby incorporated by reference as if fully set forth herein, and in Section III.C.3.

Pursuant to P.R. 3-3(c), the claim charts of Appendix C, provide an identification where these prior art references teach or suggest each and every element of the Asserted Claims of the '995 patent. For each reference or combination of references suggested by each chart, Defendant indicates whether the prior art renders the claim anticipated and/or obvious pursuant to P.R. 3–3(b). In addition to contending that the Asserted Claims are invalid in view of the prior art references cited in the claim charts of Appendix C and admitted prior art, Defendant further contend that the Asserted Claims are invalid as anticipated and/or obvious under U.S.C. §§ 102(a) and/or (b) in view of public knowledge and uses and/or offers for sale of products and services related to the subject matter of the cited references. Reference to a particular circuitry, software program, device or product in the claim charts of Appendix C should be interpreted as a reference to the product itself and any corresponding patents, publications, or product literature cited in Appendix C that relates to the cited circuitry, software program, device, or product. In addition, Defendant may rely on other documents or things that have not yet been located to support its contentions regarding such prior art circuit(s), software program(s), device(s) or product(s) that are referenced in the charts.

Defendant incorporates by reference, as if set forth fully herein, all prior art cited during the prosecution of the ’995 patent. In addition, Defendant identifies and hereby incorporates by reference as if set forth fully herein the prior art references that anticipate or render obvious an asserted claim as described in a future reexaminations or *inter partes* reviews of the ’995 patent, if any, that a requestor may file or the PTO may grant.

Defendant further identifies and hereby incorporates by reference as if set forth fully herein the prior art references and invalidity contentions as described in any other lawsuits wherein invalidity contentions have been, or will be, provided regarding the ’995 patent, any foreign counterparts, or any parent or child patent of the ’995 patent. *Advanced Coding Techs. v. LG Elecs.*, No. 2:22-cv-00501-JRG (E.D. Tex. July 18, 2024), D.I. No. 148-3 (Ex. B Samsung’s May 30, 2024 Amended Invalidity and Subject Matter Eligibility Contentions); *Advanced Coding Techs. v. Apple, Inc.*, No. 2:22-cv-00572-JRG (E.D. Tex.), D.I. 42 (Third Amended Docket Control Order). Defendant may use any and all portions of the publication, related publications, commercial embodiments of the publication, and other evidence that is discovered in these lawsuits to demonstrate and/or evidence the components, functionality, and capabilities of the devices and systems disclosed in the references charted.

Where Defendant identifies a particular figure in a prior art reference, the identification should be understood to encompass the caption and description of the figure, as well as any text relating to the figure in addition to the figure itself. Similarly, where an identified portion of text refers to a figure or other material, the identification should be understood to include the referenced figure or other material as well. It should be recognized that a person of ordinary skill in the art would generally read a prior art reference as a whole and in the context of other publications, literature, and general knowledge in the field. To understand and interpret any specific statement

or disclosure in a prior art reference, a person of ordinary skill in the art would rely upon other information including other publications and general scientific or engineering knowledge. Defendant therefore may rely upon other unidentified portions of the prior art references and on other publications and expert testimony to provide context and to aid understanding and interpretation of the identified portions.

Defendant may also rely upon other portions of the prior art references, other publications, and the testimony of experts to establish that the alleged inventions would have been obvious to a person of ordinary skill in the art, including the basis of modifying or combining certain cited references. To the extent any limitation is deemed not to be met by an item of prior art, then any purported differences are such that the claimed subject matter as a whole would have been obvious to one skilled in the art at the time of the alleged invention, in view of the state of the art and knowledge of those skilled in the art. To the extent that an element of an Asserted Claim is not anticipated, the claim is rendered obvious by combination with one or more other prior art references identified in Appendix C and the admitted prior art.

5. Obviousness Under P.R. 3-3(b) and (c)

a) Prior Art Rendering Asserted Claims Obvious

In general, a claimed invention is unpatentable under 35 U.S.C. § 103(a) if "the differences between the subject matter sought to be patented and the prior art are such that the subject matter as a whole would have been obvious at the time the invention was made to a person having ordinary skill in the art." 35 U.S.C. § 103(a); *Graham v. John Deere Co.*, 383 U.S. 1, 13-14 (1966). The ultimate determination of whether an invention is or is not obvious is a legal conclusion based on underlying factual inquiries including: "(1) the scope and content of the prior art; (2) the level of ordinary skill in the art; (3) the differences between the claimed invention and the prior art; and

(4) objective evidence of nonobviousness." *Miles Labs., Inc. v. Shandon, Inc.*, 997 F.2d 870, 877 (Fed. Cir. 1993). *See also Graham*, 383 U.S. at 17-18.

A claimed invention is obvious when a skilled artisan would have been motivated to combine the teaching of the prior art references to achieve the claimed invention, and the skilled artesian would have had a reasonable expectation of success in doing so. *See, e.g., Unigene Labs., Inc. v. Apotex, Inc.*, 655 F.3d 1352, 1360 (Fed. Cir. 2011). "Any need or problem known in the field of endeavor at the time of the invention and addressed by the patent can provide a reason for combining the elements in the manner claimed." *See KSR Int'l Co. v. Teleflex Inc.*, 550 U.S. 398, 420 (2007). While an analysis of any teaching, suggestion, or motivation to combine elements from different prior art references is useful in an obviousness analysis, such analyses should not be rigidly applied; the overall inquiry must be expansive and flexible, and must include the common sense and ordinary creativity of a person having ordinary skill in the art as part of the analysis. *Id.* at 419-21.

Pursuant to P.R. 3-3(b), Defendant identifies in Appendix A and in the sections below the prior art references that render obvious under 35 U.S.C. §103(a) the Asserted Claims of the '995 patent and include an identification of combinations showing the obviousness of the Asserted Claims in view of the prior art. Moreover, to the extent ACT contends that an element is not disclosed in any one of the references identified in Appendix C, such reference may be combined with one or more of the other references identified in Appendix C and/or the admitted prior art for such element, thereby rendering the claim invalid as obvious. Defendant may combine any prior art reference identified for the '995 patent with any other prior art reference identified for the '995 patent to assert obviousness. Even if a prior art reference does not expressly disclose all limitations as arranged or combined in the same manner as an asserted claim, a skilled artisan reading the

reference would at once envisage the claimed arrangement or combination. *See, e.g.*, *Kennametal Inc. v. Ingersoll Cutting Tool Co.*, 780 F.3d 1376 (Fed. Cir. 2015).

To the extent a finder of fact determines that a limitation of any of the Asserted Claims of the ’995 patent is not disclosed by one of the references or products and systems identified above pursuant to P.R. 3–3(a), the claims are nevertheless unpatentable as obvious because they contain nothing that constitutes patentable innovation. To the extent a finder of fact determines that a limitation of any of the Asserted Claims of the ’995 patent is not anticipated, no asserted claim goes beyond combining familiar elements according to known methods to achieve predictable results or does more than choose between clear alternatives known to those of ordinary skill in the art.

b) Teaching, Suggestion, or Motivation to Combine References

The U.S. Supreme Court decision in *KSR International Co. v. Teleflex Inc.*, 127 S. Ct. 1727, 1739 (2007) (“*KSR*”) held that a claimed invention can be obvious even if there is no explicit, written teaching, suggestion, or motivation for combining the prior art to produce that invention. Accordingly, no showing of a specific motivation to combine prior art is required to combine the references disclosed in the attached charts, as each combination of art would have no unexpected results, and, at most, would simply represent a known alternative to one of ordinary skill in the art. *See KSR*, 127 S. Ct. at 1739-40 (rejecting the Federal Circuit’s “rigid” application of the teaching, suggestion, or motivation to combine test, and instead espousing an “expansive and flexible” approach). A person of ordinary skill in the art is “a person of ordinary creativity, not an automaton” and “in many cases a person of ordinary skill in the art will be able to fit the teachings of multiple patents together like pieces of a puzzle.” *Id.* at 1742. “In determining whether the subject matter of a patent claim is obvious, neither the particular motivation nor the avowed purpose of the patentee controls. What matters is the objective reach of the claim.” *Id.* at 1741-42.

"Under the correct analysis, any need or problem known in the field of endeavor at the time of invention and addressed by the patent can provide a reason for combining the elements in the manner claimed." *Id.* at 1742. In particular, the Supreme Court emphasized the principle that "[t]he combination of familiar elements according to known methods is likely to be obvious when it does no more than yield predictable results." *Id.* at 1739. A key inquiry is whether the "improvement is more than the predictable use of prior art elements according to their established functions." *Id.* at 1740.

"Additionally, 'universal' motivations known in a particular field to improve technology provide 'a motivation to combine prior art references *even absent any hint of suggestion* in the references themselves.'" *Intel Corp. v. PACT XPP Schweiz AG*, 61 F.4th 1373, 1379 (Fed. Cir. 2023) (quoting *Intel Corp. v. Qualcomm Inc.*, 21 F.4th 784, 797-99 (Fed. Cir. 2021)) (original emphasis). Thus, motivations to combine, as well as the general state of the art, may be found in a variety of places including, but not limited to, in the references defined above, and the specification of the Asserted Patents.

The rationale to combine or modify prior art references is significantly stronger when the references seek to solve the same problem, come from the same field, and correspond well. *In re Inland Steel Co.*, 265 F.3d 1354, 1362 (Fed. Cir. 2001). The Federal Circuit allowed two references to be combined as invalidating art when "[the prior art] focus[es] on the same problem that the . . . patent addresses . . . Moreover, both [prior art references] come from the same field . . . Finally, the solutions to the identified problems found in the two references correspond well." *Id.* at 1362.

In *KSR*, the Supreme Court emphasized that inventions arising from ordinary innovation, ordinary skill, or common sense should not be patentable. *See KSR Int'l Co. v. Teleflex Inc.*, 550 U.S. 398 (2007). Although a patent challenger is not required to show that one of ordinary skill in

the art would have had a specific motivation to combine prior art references, such a showing may be helpful to the obviousness analysis. *Id.* at 418; *see also id.* at 402. Exemplary rationales that may support a conclusion of obviousness include:

- Combining various claimed elements known in the prior art according to known methods to yield a predictable result;
- Making a simple substitution of one or more known elements for another to obtain a predictable result;
- Using a known technique to improve a similar device or method in the same way;
- Applying a known technique to a known device or method ready for improvement to yield a predictable result;
- Choosing from a finite number of identified, predictable solutions with a reasonable expectation of success, such that the solution was one which was "obvious to try";
- A known work in one field of endeavor prompting variations of it for use either in the same field or a different field based on design incentives or other market forces in which the variations were predictable to one of ordinary skill in the art; and
- A teaching, suggestion, or motivation in the prior art that would have led one of ordinary skill in the art to modify the prior art reference or to combine the teachings of various prior art references to arrive at the claimed invention.

Although Defendant contends that no specific motivation to combine is necessary for the references cited in the attached exhibits, consistent with the Patent Rules, Defendant hereby identifies additional motivations and reasons to combine the cited art. These exemplary discussions regarding obviousness are illustrative, and not intended to be exhaustive. To the extent ACT challenges a combination of prior art with respect to a particular element, Defendant reserves all rights to supplement these Contentions to further specify the motivation to combine the prior art. Defendant may rely on cited or uncited portions of the prior art, other documents, and/or expert testimony to establish that a person of ordinary skill in the art would have been motivated to modify or combine the prior art so as to render the claims invalid as obvious.

First, one of skill in the art would have been motivated to combine one or more of: (i) the admitted prior art; and/or (ii) the references identified in Appendix C, with one another, because they all relate to common objectives and subject matter. The references share commonalities in terms of their general subject matter, as well as the types of equipment, products, and/or approaches they describe. Moreover, a person of ordinary skill would have been motivated to combine the above prior art based on the nature of the problem to be solved, the teachings of the prior art, and the knowledge of persons of ordinary skill in the art. The identified prior art addresses the same or similar technical issues and suggests the same or similar solutions to those issues. To the extent ACT challenges a combination of prior art with respect to a particular element, Defendant may supplement these contentions to further specify the motivation to combine the prior art. Defendant may rely on cited or uncited portions of the prior art, other documents, and/or expert testimony to establish that a person of ordinary skill in the art would have been motivated to modify or combine the prior art so as to render the claims invalid as obvious. For example, each of the following relate to the same technical issues: encoding and decoding of videos: Sakazume, Ong, Martins, Segall, He, Sasai, Wang, Fogg 236, Nagumo 519, Yagasaki, Nakamura, Schwarz, Schreiber, Garrido 853, Wedi 380, Suzuki 952, Lim 000, Garrido 868, Margulis 807, Slinger, Gu, Lim 206, Kondo, and Hannuksela.

Second, a person of ordinary skill in the art would have understood that the references identified in Appendix C explicitly or implicitly reference other prior art that share common authors or inventors, were published in the same journals, presented at the same conferences, were presented as proposals to standards working groups, and/or were developed at common companies, schools, or organizations, all of which would motivate one of skill in the art to combine them. Design incentives and other market forces would have prompted those combinations and

modifications. "When there is a design or market pressure to solve a problem and there are a finite number of identified, predictable solutions, a person of ordinary skill has good reason to pursue known options within his or her technical grasp." *KSR Int'l, 127 S. Ct.* at 1742. Moreover, some pieces of prior art refer to or discuss other pieces of prior art, illustrating the close technical relationship among the prior art. To the extent any piece of prior art refers to or discusses other pieces of prior art, either expressly or inherently, it would have been obvious to combine those pieces of prior art for that reason. For example, the '995 patent discloses that there are standard "techniques for moving picture encoding services such as by MPEG-1, -2, and -4/AVC/SVC specified to standardize under the ISO/IEC SC29WG11." For example, Sakazume, Garrido 853, Garrido 868, Schwarz, and Wang also reference these standards. It would have been obvious to combine any of the references in Appendix C and the admitted prior art with these established standards as each was intended to improve or build upon these standards. Further, to the extent that any reference discusses standardized coding methods, those references would have been compatible with each other for the same reason.

Third, the references identified in Appendix C and the admitted prior art are also directed to similar subject matter within that field. Additionally, any products, devices, or processes described in the references existed and/or were invented before or during the period in which the claimed inventions were developed, providing further motivation to combine them. For example, each of the following relate to video encoders and decoders around May 30, 2008: Sakazume, Ong, Martins, Segall, He, Sasai, Wang, Fogg 236, Nagumo 519, Yagasaki, Nakamura, Schwarz, Schreiber, Garrido 853, Wedi 380, Suzuki 952, Lim 000, Garrido 868, Margulis 807, Slinger, Gu, Lim 206, Kondo, and Hannuksela.

Fourth, one or more combinations of the admitted prior art and prior art references identified in Appendix C, pursuant to P.R. 3–3(b), would have been obvious because these references would have been combined with one another using: known methods to yield predictable results; known techniques in the same way; a simple substitution of one known, equivalent element for another to obtain predictable results; and/or a teaching, suggestion, or motivation in the prior art generally. The Asserted Claims are obvious, in part, because they merely arrange old elements, with each performing the same function that had been known, to perform and yield no more than what one of ordinary skill would expect from such an arrangement. Because there were a finite number of predictable solutions in the art of delivering content in response to a request, it would have been obvious to a person of ordinary skill in the art to pursue the known options. The identified prior art references merely use those familiar elements for their primary or well-known purposes and in a manner well within the ordinary level of skill in the art. Accordingly, common sense and the knowledge of the prior art render the Asserted Claims invalid as well.

For example, the ’995 Patent’s Background section admits in the prior art that hierarchical encoding with a base layer and enhancement layers was well known in the art at the time the application leading to the ’995 patent was filed, including citations to standards including MPEG-4 SVC. In addition, it would have been obvious to try combining the prior art references identified above because there were only a finite number of predictable solutions and/or because known work in one field of endeavor prompted variations based on predictable design incentives and/or market forces either in the same field or a different one. For example, there were only a finite number of ways to change resolution, and it would have been obvious to a POSA to try both super resolution enlargement and resolution conversion. In addition, the combination of prior art references identified above would have been obvious because the combinations represent known potential

options with a reasonable expectation of success. In particular, it was known that when a particular resolution output was desired, resolution conversion could be used to get that output. *See, e.g.*, Martins.

Fifth, additional evidence that there would have been a motivation to combine the prior art references identified in Appendix C and/or the admitted prior art, includes, for example, the interrelated teachings of multiple prior art references; the effects of demands known to the design community or present in the marketplace; the existence of a known problem for which there was an obvious solution encompassed by the Asserted Claims; the existence of a known need or problem in the field of the endeavor at the time of the invention(s); and the background knowledge that would have been possessed by a person having ordinary skill in the art. For example, prior to the alleged priority date of the Asserted Patents, it was well known that hierarchical encoding, including as disclosed in the prior art, could be used to provide base and enhancement streams at different resolutions. *See, e.g.*, Sakazume, Sung, Tom, Schulz, Stark, Martins, Segall, Sesai, Fogg 236, Nagumo 519, Schreiber, Wedi 380, Suzuki 952, Margulis 807, Ong, He, Wang, Yagasaki, Nakemura, Schwarz, Tsai, Garrido 853, Lim 000, Garrido 868, Slinger, Gu, Lim 206, Kondo, Hannuksela. A skilled artisan seeking, for example, to provide specific resolutions would have sought to use the concept of base and enhancement streams, and tailored the resolutions used during encoding to create the specific resolutions required.

Sixth, a person of ordinary skill at the time of the alleged invention had reason to combine or modify one or more of the references identified in Appendix C and/or the admitted prior art, with other prior art references in Appendix C and/or the admitted prior art, in light of the knowledge of a person of ordinary skill in the art at the time of the invention and information in the prior art cited herein. For example, the references in Appendix C and the admitted prior art all

generally relate to using super resolution enlargement when encoding and decoding video. Thus, they are all directed to features within the same field and one of ordinary skill in the art at the time of the alleged invention would have been motivated to look to these teachings in the field and combine any of these known technologies.

Seventh, many of the references in Appendix C and/or the admitted prior art, have common design features, such as hierarchical encoding. One of ordinary skill in the art would have been motivated and found it obvious to combine these references, with a reasonable expectation of success, using the standard methods for hierarchical encoding (*e.g.* use of encoders/decoders and resolution converters) to create the desired output resolutions.

In addition to the exemplary motivations, suggestions, or reasons to combine described above, Defendant identifies additional obviousness combinations and motivations to combine in the sections below. The exemplary motivations, suggestions, or reasons to combine described above and below are not exclusive or exhaustive, and should not be interpreted as indicating that any Asserted Claim is not already anticipated under 35 U.S.C. § 102. Defendant may identify further examples as the case proceeds. In addition, Defendant provides additional reasons to combine various disclosures below.

(i) "super-resolution enlargement" claim terms

Independent claims 1, 2, 3, 4, 8, and 9 of the '995 patent and their corresponding dependent claims recite limitations directed to "super-resolution enlargement" (collectively, "Super-Resolution Limitations").

To the extent ACT contends that the admitted prior art or any of the references identified in Appendix C do not disclose the Super-Resolution Limitations, a person of ordinary skill in the art would have arrived at the purported invention based on the background knowledge, and/or one or more of the prior art references identified in the charts and/or attached as Exhibits.

As confirmed by the Examiner during the prosecution of the ’995 patent, the Asserted Claims of the ’995 patent recite well-known components and techniques such as “the use of super-resolution processors in scalable video coding systems” (*see, e.g.*, 10/25/2016 Non-Final Rejection at 8, 14, 18, 20 (citing Ong)), “the use of resolution converters for multi-resolution encoding and decoding to enhance current and reference frames” (*see, e.g.*, 10/25/2016 Non-Final Rejection at 6, 9, 15 (citing Holcomb); 5/17/2017 Final Rejection at 4, 7, 10-11, 16 (same); 10/4/2017 Non-Final Rejection at 7, 11, 14, 20 (same); 5/23/2017 Final Rejection at 5, 9, 13, 18 (same)) and “to implement resampling of pixels” (*see, e.g.*, 5/23/2017 Final Rejection at 5, 9, 13, 18 (citing Holcomb)), “enlarging a set of decoded pictures with a second resolution higher than the standard resolution” (*see, e.g.*, 5/17/2017 Final Rejection at 5, 8, 12, 16-17 (citing Suzuki)); 10/4/2017 Non-Final Rejection at 8, 11, 15, 20 (same) and “enlarging a set of decoded pictures with a second resolution higher than the standard resolution and implementing an interpolation of pixels” (*see, e.g.*, 5/23/2017 Final Rejection at 6, 10, 14, 19 (citing Barkley)).

Indeed, the ’995 patent itself admits that super resolution enlargement was well known in the art at the time the application leading to the ’995 patent was filed, including citations to Sung, Tom, Schulz, and Stark. ’995 patent at 22:3 8-23:21 (conceding that “there having been many studies reported in recent years” on super-resolution conversion and that the super-resolution process of the purported invention “may for instance be an application of any such super-resolution process as described above”). Thus, it was well known in the art that super resolution enlargement can be used to enhance low resolution videos. *See, e.g.*, Nagumo 519 at Figs. 3, 4, 8-14, 16-18, 21-22, 25, 30-32, 35-36, 39, ¶¶ [0052]-[0053], [0110]-[0111], [0120]-[0121], [0124]-[0125], [0035], [0143]-[0144], [0149]-[0150], [0153]-[0154]; Wang at Fig. 15, [0083]; Jeon at Fig. 5, [0070]; Fogg 236 at Fig. 4, 29, 11:46-12:9, 39:52-58, Sasai at Fig. 1, [0093], [0117], [0129];

Holcomb at Figs. 2, 5, 6:8-27, 7:23-48, 9:14-54; Barkley at Figs. 1, 3, 5-8, [0005]; Martins Page 803-805, 806, 807, Fig. 2, 3; Park at 21; H.263 at Fig. 1, Summary, Section 3.2, Annex U; Kramer at Abstract, 356; Keren at Abstract, page 742; Tsai at page 318; Patti at Abstract, page 1064; Gurturk at Abstract, page 170; Chen at Abstract, page 465; Erickson at Abstract; *see also* Sung, Tom, Schulz, Stark, Martins, Sesai, Fogg 236, Nagumo 519, Schreiber, Wedi 380, Suzuki 952, Margulis 807, Keren.

Thus, a POSA was motivated to combine a super-resolution enlargement with any hierarchical encoding or decoding system as disclosed in, *e.g.*, Sung, Tom, Schulz, Stark, Martins, Segall, Sesai, Fogg 236, Nagumo 519, Schreiber, Wedi 380, Suzuki 952, Margulis 807, Ong, He, Wang, Yagasaki, Nakemura, Schwarz, Tsai, Garrido 853, Lim 000, Garrido 868, Slinger, Gu, Lim 206, Kondo, Hannuksela. A POSA would have had a reasonable expectation of success in combining because this concept was well known and involved nothing more than combining various claimed elements known in the prior art according to known methods to yield a predictable result.

(ii) "resolution conversion" terms

Independent claims 1, 2, 3, 4, 8, 9, 10 of the '995 patent and their corresponding dependent claims recite limitations directed to "resolution conversion," including resolution conversion after super-resolution enlargement (collectively, "Resolution Conversion Limitations").

To the extent ACT contends that the admitted prior art or any of the references identified in Appendix C do not disclose the Resolution Conversion Limitations, a person of ordinary skill in the art would have arrived at the purported invention based on the background knowledge, and/or one or more of the prior art references identified in the charts and/or attached as Exhibits.

As noted by the Examiner during prosecution of the '995 patent, "the use of resolution converters for multi-resolution encoding and decoding to enhance current and reference frames

and to implement resampling of pixels" was well known. *See, e.g.*, 10/25/2016 Non-Final Rejection at 6, 9, 15 (citing Holcomb); 5/17/2017 Final Rejection at 4, 7, 10-11, 16 (same); 10/4/2017 Non-Final Rejection at 7, 11, 14, 20 (same); 5/23/2017 Final Rejection at 5, 9, 13, 18 (same).

A POSA was motivated to combine resolution conversion with any hierarchical encoding or decoding system as disclosed in, *e.g.*, Sung, Tom, Schulz, Stark, Martins, Segall, Sesai, Fogg 236, Nagumo 519, Schreiber, Wedi 380, Suzuki 952, Margulis 807, Ong, He, Wang, Yagasaki, Nakemura, Schwarz, Tsai, Garrido 853, Lim 000, Garrido 868, Slinger, Gu, Lim 206, Kondo, Hannuksela. In particular, it was understood that resolution conversion could be used to generate any output resolution required. *See, e.g.*, Martins at Fig. 2 ("Then final step is decimation to the desired format."). Thus, a POSA was motivated to use the well-known process of resolution conversion to generate desired resolutions during the encoding and decoding process, including after super-resolution enlargement, if it would generate the desired resolution.

A POSA would have had a reasonable expectation of success in combining because this concept was well known and involved nothing more than combining various claimed elements known in the prior art according to known methods to yield a predictable result.

(iii) hierarchical coding claim terms

Independent claims 1, 2, 3, 4, 8, 9, 10 of the '995 patent and their corresponding dependent claims recite limitations directed to the standard components for hierarchical encoding and decoding (*e.g.*, demultiplexer, multiple encoders/decoders and resolution converters) (collectively, "Hierarchical Coding Limitations").

To the extent ACT contends that the admitted prior art or any of the references identified in Appendix C do not disclose the Hierarchical Coding Limitations, a person of ordinary skill in

the art would have arrived at the purported invention based on the background knowledge, and/or one or more of the prior art references identified in the charts attached as Exhibits.

A POSA was motivated to combine the components for hierarchical encoding or decoding system as disclosed in, *e.g.*, Sung, Tom, Schulz, Stark, Martins, Segall, Sesai, Fogg 236, Nagumo 519, Schreiber, Wedi 380, Suzuki 952, Margulis 807, Ong, He, Wang, Yagasaki, Nakemura, Schwarz, Tsai, Garrido 853, Lim 000, Garrido 868, Slinger, Gu, Lim 206, Kondo, Hannuksela. Indeed, the ’995 patent admits that hierarchical encoding with a base layer and enhancement layers at different resolutions was well known in the art at the time the application leading to the ’995 patent was filed, including citations to standards including MPEG-4 SVC. ’995 patent at 1:66-2:36 (“there are techniques for hierarchical encoding services on moving pictures represented by among others the above-noted Patent Literature 1 and MPEG-4 SVC”). Thus, it was well known in the art at the time the application leading to the ’995 patent was filed, that the encoding and decoding of such base and enhancement layers involved resolution conversion to any desired resolutions during the process, *See*, *e.g.*, Sung, Tom, Schulz, Stark, Martins, Segall, Sesai, Fogg 236, Nagumo 519, Schreiber, Wedi 380, Suzuki 952, Margulis 807, Ong, He, Wang, Yagasaki, Nakemura, Schwarz, Tsai, Garrido 853, Lim 000, Garrido 868, Slinger, Gu, Lim 206, Kondo, Hannuksela. For example, the ’995 patent itself discloses that there are standard “techniques for moving picture encoding services such as by MPEG-1, -2, and -4/AVC/SVC specified to standardize under the ISO/IEC SC29WG11.” Furthermore, the ’995 patent admits that these processes involved the “use of decoded pictures obtained by a local decoding as reference pictures for estimation of motions to create data on motion vectors, and use of data on motion vectors created by compensation of motions, to create such predictive pictures as having nearest image qualities to target pictures as encoding targets, followed by determining difference data between predictive pictures and target

pictures, and implementing on the difference data a process for a prescribed encoding to attain a high efficient encoding making use of high correlations in the temporal direction."

A POSA would have had a reasonable expectation of success in combining because the components for hierarchical encoding were well known and involved nothing more than combining various claimed elements known in the prior art according to known methods to yield a predictable result.

c) Additional Combinations

For at least the reasons described above, it would have been obvious to one of ordinary skill in the art to combine each prior art reference listed in Appendix C with any other reference or references listed in Appendix C along with the knowledge of one of ordinary skill in the art to arrive at the inventions claims in the '995 patent.[18] For example, and without limitation, the Asserted Claims of the '995 patent would have been obvious to one of ordinary skill in the art in view of the following combinations:

Table 4-C: Additional Combinations for the '995 Patent

Patent No. or Title (Primary Inventor/Author)	In Combination with One or More of: (Patent No. or Title (Primary Inventor/Author))
Ong	• Sung • Tom • Schulz • Stark • Martins • Segall • Sakazume • Sesai • Fogg 236

[18] Further, Defendant is actively searching for information regarding at least the systems, devices, and/or inventions listed above in Table 3-C. It would have been obvious to one of ordinary skill in the art to combine each of the prior art references listed in Appendix C with any of the systems identified in Table 3-C. Defendant reserves the right to supplement or amend these contentions as discovery progresses, to the extent permitted by the Court.

	• Nagumo 519 • Schreiber • Wedi • Suzuki 952 • Margulis 807 • He • Wang • Yagasaki • Nakemura • Schwarz • Tsai • Garrido 853 • Lim 000 • Garrido 868 • Slinger • Gu • Lim 206 • Kondo • Hannuksela • H.263 • H.264 • The knowledge of a person of ordinary skill in the art.
Sakazume	• Sung • Tom • Schulz • Stark • Martins • Segall • Ong • Sesai • Fogg 236 • Nagumo 519 • Schreiber • Wedi • Suzuki 952 • Margulis 807 • He • Wang • Yagasaki • Nakemura • Schwarz • Tsai • Garrido 853

	• Lim 000 • Garrido 868 • Slinger • Gu • Lim 206 • Kondo • Hannuksela • H.263 • H.264 • Any system implementing H.264 can be also combined with any other system implementing H.264 in addition to the standard itself and any publications describing H.264. • The knowledge of a person of ordinary skill in the art.
Systems Implementing H.263	• Sung • Tom • Schulz • Stark • Martins • Segall • Ong • Sakazume • Sesai • Fogg 236 • Nagumo 519 • Schreiber • Wedi • Suzuki 952 • Margulis 807 • He • Wang • Yagasaki • Nakemura • Schwarz • Tsai • Garrido 853 • Lim 000 • Garrido 868 • Slinger • Gu • Lim 206 • Kondo

	• Hannuksela • H.263 • H.264 • Any system implementing H.263 can be also combined with any other system implementing H.263 in addition to the standard itself and any publications describing H.263. • The knowledge of a person of ordinary skill in the art.
Systems Implementing H.264	• Sung • Tom • Schulz • Stark • Martins • Segall • Ong • Sakazume • Sesai • Fogg 236 • Nagumo 519 • Schreiber • Wedi • Suzuki 952 • Margulis 807 • He • Wang • Yagasaki • Nakemura • Schwarz • Tsai • Garrido 853 • Lim 000 • Garrido 868 • Slinger • Gu • Lim 206 • Kondo • Hannuksela • H.263 • H.264 • Any system implementing H.264 can be also combined with any other system implementing H.264 in

	addition to the standard itself and any publications describing H.264. • The knowledge of a person of ordinary skill in the art.
Adobe Flash Player	• Sung • Tom • Schulz • Stark • Martins • Segall • Ong • Sakazume • Sesai • Fogg 236 • Nagumo 519 • Schreiber • Wedi • Suzuki 952 • Margulis 807 • He • Wang • Yagasaki • Nakemura • Schwarz • Tsai • Garrido 853 • Lim 000 • Garrido 868 • Slinger • Gu • Lim 206 • Kondo • Hannuksela • H.263 • H.264 • Any system implementing H.264 can be also combined with any other system implementing H.264 in addition to the standard itself and any publications describing H.264. • The knowledge of a person of ordinary skill in the art.
CoreAVC	• Sung • Tom

	• Schulz • Stark • Martins • Segall • Ong • Sakazume • Sesai • Fogg 236 • Nagumo 519 • Schreiber • Wedi • Suzuki 952 • Margulis 807 • He • Wang • Yagasaki • Nakemura • Schwarz • Tsai • Garrido 853 • Lim 000 • Garrido 868 • Slinger • Gu • Lim 206 • Kondo • Hannuksela • H.263 • H.264 • Any system implementing H.264 can be also combined with any other system implementing H.264 in addition to the standard itself and any publications describing H.264. • The knowledge of a person of ordinary skill in the art.
FFmpeg	• Sung • Tom • Schulz • Stark • Martins • Segall • Ong • Sakazume

	• Sesai • Fogg 236 • Nagumo 519 • Schreiber • Wedi • Suzuki 952 • Margulis 807 • He • Wang • Yagasaki • Nakemura • Schwarz • Tsai • Garrido 853 • Lim 000 • Garrido 868 • Slinger • Gu • Lim 206 • Kondo • Hannuksela • H.263 • H.264 • Any system implementing H.263 can be also combined with any other system implementing H.263 in addition to the standard itself and any publications describing H.263. • Any system implementing H.264 can be also combined with any other system implementing H.264 in addition to the standard itself and any publications describing H.264. • The knowledge of a person of ordinary skill in the art.
Helix	• Sung • Tom • Schulz • Stark • Martins • Segall • Ong • Sakazume • Sesai

	• Fogg 236 • Nagumo 519 • Schreiber • Wedi • Suzuki 952 • Margulis 807 • He • Wang • Yagasaki • Nakemura • Schwarz • Tsai • Garrido 853 • Lim 000 • Garrido 868 • Slinger • Gu • Lim 206 • Kondo • Hannuksela • H.263 • H.264 • Any system implementing H.263 can be also combined with any other system implementing H.263 in addition to the standard itself and any publications describing H.263. • Any system implementing H.264 can be also combined with any other system implementing H.264 in addition to the standard itself and any publications describing H.264. • The knowledge of a person of ordinary skill in the art.
Hz7220	• Sung • Tom • Schulz • Stark • Martins • Segall • Ong • Sakazume • Sesai • Fogg 236

	• Nagumo 519 • Schreiber • Wedi • Suzuki 952 • Margulis 807 • He • Wang • Yagasaki • Nakemura • Schwarz • Tsai • Garrido 853 • Lim 000 • Garrido 868 • Slinger • Gu • Lim 206 • Kondo • Hannuksela • H.263 • H.264 • Any system implementing H.264 can be also combined with any other system implementing H.264 in addition to the standard itself and any publications describing H.264. • The knowledge of a person of ordinary skill in the art.
HTC	• Sung • Tom • Schulz • Stark • Martins • Segall • Ong • Sakazume • Sesai • Fogg 236 • Nagumo 519 • Schreiber • Wedi • Suzuki 952 • Margulis 807 • He

	• Wang • Yagasaki • Nakemura • Schwarz • Tsai • Garrido 853 • Lim 000 • Garrido 868 • Slinger • Gu • Lim 206 • Kondo • Hannuksela • H.263 • H.264 • Any system implementing H.263 can be also combined with any other system implementing H.263 in addition to the standard itself and any publications describing H.263. • Any system implementing H.264 can be also combined with any other system implementing H.264 in addition to the standard itself and any publications describing H.264. • The knowledge of a person of ordinary skill in the art.
HRD	• Sung • Tom • Schulz • Stark • Martins • Segall • Ong • Sakazume • Sesai • Fogg 236 • Nagumo 519 • Schreiber • Wedi • Suzuki 952 • Margulis 807 • He • Wang

	• Yagasaki • Nakemura • Schwarz • Tsai • Garrido 853 • Lim 000 • Garrido 868 • Slinger • Gu • Lim 206 • Kondo • Hannuksela • H.263 • H.264 • Any system implementing H.264 can be also combined with any other system implementing H.264 in addition to the standard itself and any publications describing H.264. • The knowledge of a person of ordinary skill in the art.
MSM7200	• Sung • Tom • Schulz • Stark • Martins • Segall • Ong • Sakazume • Sesai • Fogg 236 • Nagumo 519 • Schreiber • Wedi • Suzuki 952 • Margulis 807 • He • Wang • Yagasaki • Nakemura • Schwarz • Tsai • Garrido 853 • Lim 000

	• Garrido 868 • Slinger • Gu • Lim 206 • Kondo • Hannuksela • H.263 • H.264 • Any system implementing H.263 can be also combined with any other system implementing H.263 in addition to the standard itself and any publications describing H.263. • Any system implementing H.264 can be also combined with any other system implementing H.264 in addition to the standard itself and any publications describing H.264. • The knowledge of a person of ordinary skill in the art.
Quicktime	• Sung • Tom • Schulz • Stark • Martins • Segall • Ong • Sakazume • Sesai • Fogg 236 • Nagumo 519 • Schreiber • Wedi • Suzuki 952 • Margulis 807 • He • Wang • Yagasaki • Nakemura • Schwarz • Tsai • Garrido 853 • Lim 000 • Garrido 868

	• Slinger • Gu • Lim 206 • Kondo • Hannuksela • H.263 • H.264 • Any system implementing H.263 can be also combined with any other system implementing H.263 in addition to the standard itself and any publications describing H.263. • Any system implementing H.264 can be also combined with any other system implementing H.264 in addition to the standard itself and any publications describing H.264. • The knowledge of a person of ordinary skill in the art.
VLC Media Player	• Sung • Tom • Schulz • Stark • Martins • Segall • Ong • Sakazume • Sesai • Fogg 236 • Nagumo 519 • Schreiber • Wedi • Suzuki 952 • Margulis 807 • He • Wang • Yagasaki • Nakemura • Schwarz • Tsai • Garrido 853 • Lim 000 • Garrido 868 • Slinger

	• Gu • Lim 206 • Kondo • Hannuksela • H.263 • H.264 • Any system implementing H.263 can be also combined with any other system implementing H.263 in addition to the standard itself and any publications describing H.263. • Any system implementing H.264 can be also combined with any other system implementing H.264 in addition to the standard itself and any publications describing H.264. • The knowledge of a person of ordinary skill in the art.
x264	• Sung • Tom • Schulz • Stark • Martins • Segall • Ong • Sakazume • Sesai • Fogg 236 • Nagumo 519 • Schreiber • Wedi • Suzuki 952 • Margulis 807 • He • Wang • Yagasaki • Nakemura • Schwarz • Tsai • Garrido 853 • Lim 000 • Garrido 868 • Slinger • Gu

	• Lim 206 • Kondo • Hannuksela • H.263 • H.264 • Any system implementing H.264 can be also combined with any other system implementing H.264 in addition to the standard itself and any publications describing H.264. • The knowledge of a person of ordinary skill in the art.

d) Secondary Considerations

Proving secondary considerations is ACT's burden. *See, e.g.*, *ZUP, LLC v. Nach Mfg., Inc.*, 896 F.3d 1365, 1373 (Fed. Cir. 2018) ("[A] patentee bears the burden of production with respect to evidence of secondary considerations of nonobviousness."). In interrogatory responses, ACT has purportedly provided evidence of (1) long felt but unresolved needs; (2) commercial success/industry praise; (3) copying; and (4) licensing. However, none of this purported evidence demonstrates nonobviousness. For example, ACT asserts that there was a long-felt need for enhancing low resolution videos; however, as discussed in this Section, the use of super resolution had already solved the problem of enhancing low resolution videos and was well-known in the prior art. *See, e.g.*, Sung, Tom, Schulz, Stark, Martins, Sesai, Fogg 236, Nagumo 519, Schreiber, Wedi 380, Suzuki 952, Margulis 807, Keren. Further, ACT has not shown any nexus between any alleged secondary considerations and the Asserted Claims for any purported commercial success or praise. *See Wyers v. Master Lock Co.*, 616 F.3d 1231, 1246 (Fed. Cir. 2010); *In re Kao*, 639 F.3d 1057, 1068-69, 98 USPQ2d 1799, 1808 (Fed. Cir. 2011) ("Where the offered secondary consideration actually results from something other than what is both claimed and novel in the claim, there is no nexus to the merits of the claimed invention."); *Tokai Corp. v. Easton Enters., Inc.*, 632 F.3d 1358, 1369 (Fed. Cir. 2011) ("If commercial success is due to an element in the

prior art, no nexus exists."); *Ormco Corp. v. Align Technology, Inc.*, 463 F.3d 1299, 1312 (Fed. Cir. 2006) ("[I]f the feature that creates the commercial success was known in the prior art, the success is not pertinent."). ACT's purported evidence for commercial success or praise relates to AV 1 generally or the use of the prior art method of super resolution specifically. ACT does not demonstrate that any purported commercial success or praise relates to novel claimed features of the '995 patent. Further, any purported praise for the use of S-Frames is unrelated to the '995 patent.

To date, ACT has provided no factual evidence demonstrating copying. Defendant thus reserves the right to supplement its contentions with respect to secondary considerations once ACT has adequately provided evidence for these claims.

"The fact of near-simultaneous invention, though not determinative of statutory obviousness, is strong evidence of what constitutes the level of ordinary skill in the art." *Ecolochem, Inc. v. S. Cal. Edison Co.*, 227 F.3d 1361, 1379 (Fed. Cir. 2000) (citing *The Int'l Glass Co. v. United States*, 187 Ct. Cl. 376, 408 F.2d 395, 405 (1969)). "[T]he possibility of near simultaneous invention by two or more equally talented inventors working independently, . . . may [] be an indication of obviousness when considered in light of all the circumstances." *Id.* (citing *Lindeman Maschinenfabrik GmbH v. American Hoist & Derrick Co.*, 730 F.2d 1452, 1460 (Fed. Cir. 1984)); *see also George M. Martin Co. v. Alliance Mach. Sys. Int'l LLC*, 618 F.3d 1284, 1305 (Fed. Cir. 2010) ("Independently made, simultaneous inventions, made within a comparatively short space of time, are persuasive evidence that the claimed apparatus was the product only of ordinary mechanical or engineering skill."). To the extent that any of the references in these preliminary invalidity contentions is found not to be prior art to the respective Asserted Patents,

these references may be relied upon as evidence of near-simultaneous invention favoring obviousness.

To the extent ACT is permitted to introduce contentions and/or evidence concerning secondary considerations in the future, Defendant reserved all rights to rebut those contentions if and when ACT identifies them. In the meantime, Defendant notes the complete lack of any such evidence in the record. Moreover, Defendant further contends that, in any event, the evidence of obviousness for each asserted claim is so overwhelming that secondary considerations are necessarily insufficient to rebut Defendant's showing. *See, e.g., Ohio Willow Wood Co. v. Alps South, LLC*, 735 F.3d 1333, 1344 (Fed. Cir. 2013) ("[W]here a claimed invention represents no more than the predictable use of prior art elements according to established functions, as here, evidence of secondary indicia are frequently deemed inadequate to establish non-obviousness.").

6. 35 U.S.C. § 112 Invalidity Under P.R. 3–3(d)

Pursuant to P.R. 3–3(d), Defendant contends that the Asserted Claims of the '995 patent are invalid under 35 U.S.C. § 112 because the claims are indefinite, not enabled, or lack written description. Defendant's contentions that the following claims are invalid under 35 U.S.C. § 112 are made in the alternative and do not constitute, and should not be interpreted as, admissions regarding the construction or scope of the claims of the '995 patent, or that any of the claims of the '995 patent are not anticipated or rendered obvious by prior art. The following contentions, made pursuant to P.R. 3–3(d), are subject to revision and amendment pursuant to P.R. 3–6 and Federal Rule of Civil Procedure 26(e) and the Orders of record in this matter to the extent appropriate, *e.g.*, in light of further investigation and discovery regarding the defenses, the Court's construction of the claims at issue, and/or review and analysis of expert witnesses. Defendant offers these contentions in response to ACT's Infringement Contentions and without prejudice to any position it may ultimately take as to any claim construction issues.

[redacted]

a) Indefiniteness under 35 U.S.C. § 112, Second Paragraph

35 U.S.C. § 112 includes a definiteness requirement. *See* 35 U.S.C. § 112, ¶ 2 ("[T]he specification shall conclude with one or more claims particularly pointing out and distinctly claiming the subject matter which the applicant regards as his invention."). "[A] patent is invalid for indefiniteness if its claims, read in light of the specification delineating the patent, and the prosecution history, fail to inform, with reasonable certainty, those skilled in the art about the scope of the invention." *Nautilus, Inc. v. Biosig Instruments, Inc.*, 134 S. Ct. 2120, 2124 (2014).

The Asserted Claims are invalid as indefinite under 35 U.S.C. § 112, second paragraph, for failing to particularly point out and distinctly claim the subject matter which the applicants regard as their invention. The specification of the '995 patent provides no objective standard by which one of ordinary skill in the art could determine the meaning of the asserted claim elements. In particular, at least the following claim terms are indefinite because they fail to particularly point out and distinctly claim the subject matter which the applicants regarded as their alleged inventions.[19]

For example, Claims 1, 8 and 9 and their dependent claims are invalid for indefiniteness as to the phrase "a first combination of processes for an encoding and a decoding" because this term when read in light of the specification delineating the patent and the prosecution history, fail to inform, with reasonable certainty, those skilled in the art about the scope of the invention. For example, the limitation fails to inform a person of ordinary skill what processes or combination of processes would satisfy the claims.

For example, Claims 2, 3, and 4 are invalid for indefiniteness as to the phrase "a prescribed first decoding" because this term when read in light of the specification delineating the patent and

[19] Dependent claims are also invalid as being dependent upon a base claim that is indefinite under 35 U.S.C. § 112, second paragraph.

the prosecution history, fail to inform, with reasonable certainty, those skilled in the art about the scope of the invention. For example, the limitation fails to inform a person of ordinary skill what "prescribed" processes would satisfy the claims.

The following limitations recited in the '995 patent Asserted Claims are indefinite in whole, in part or in combination, as summarized below:[20]

Table 5-C: Indefinite Terms under 35 U.S.C. § 112(2) the '995 Patent

Term	Relevant Claim(s)
a first encoder configured to work on a subsequence of a sequence of moving pictures with a standard resolution to implement a first combination of processes for an encoding and a decoding to create a first sequence of encoded bits and a set of decoded pictures with the standard resolution;	1
a first super-resolution enlarger configured to work on the subsequence of the sequence of moving pictures with the standard resolution to implement an interpolation of pixels with a first enlargement to create a set of super-resolution enlarged pictures with a first resolution higher than the standard resolution;	1
a first resolution converter configured to work on the set of super-resolution enlarged pictures to implement a process for a first resolution conversion to create a set of super-resolution enlarged and converted pictures with a standard resolution;	1
a second super-resolution enlarger configured to acquire the set of decoded pictures with the standard resolution from the first encoder to work on the sequence of decoded pictures to implement an interpolation of pixels with a second enlargement to create a set of super-resolution enlarged decoded pictures with a second resolution higher than the standard resolution;	1

[20] Listed claims also include all Asserted Claims dependent thereon, even if those claims are not individually listed.

a second resolution converter configured to work on the set of super-resolution enlarged decoded pictures to implement a process for a second resolution conversion to create a set of super-resolution enlarged and converted decoded pictures with a standard resolution; and	1
a demultiplexer configured to work on a sequence of input encoded bits to implement a process for a prescribed demultiplexing to output at least a first and a second sequence of encoded bits;	2
a first decoder configured to acquire the first sequence of encoded bits obtained with a standard resolution at the demultiplexer to implement thereon a process for a prescribed first decoding to create a sequence of decoded pictures with a standard resolution;	2
a first super-resolution enlarger configured to acquire the sequence of decoded pictures created with a standard resolution at the first decoder to work on the sequence of decoded pictures to implement an interpolation of pixels with a first enlargement to create a sequence of super-resolution enlarged decoded pictures with a first resolution higher than a standard resolution;	2
a first resolution converter configured to acquire the sequence of super-resolution enlarged decoded pictures created at the first super-resolution enlarger to work on the sequence of super-resolution enlarged decoded pictures to implement a process for a prescribed resolution conversion to create a sequence of super-resolution decoded pictures with a standard resolution;	2
a second decoder configured to acquire the second sequence of encoded bits obtained with a standard resolution at the demultiplexer as a set of decoding targets, the sequence of decoded pictures created with the standard resolution at the first decoder as a set of first reference pictures, and the sequence of super-resolution decoded pictures created with the standard resolution at the first resolution converter as a set of second	2

reference pictures, and select one of the set of first reference pictures and the set of second reference pictures based on reference picture selection information to implement a combination of processes for a prescribed prediction and a prescribed second decoding being a decoding with an extension of the standard resolution, to create a sequence of super-resolution pictures decoded with the standard resolution based on the set of decoding targets and the set of selected reference pictures; and	
a second resolution converter configured to acquire the sequence of decoded pictures with the standard resolution from the first decoder to work on the sequence of decoded pictures to implement an interpolation of pixels with the second enlargement to create a sequence of enlarged decoded pictures with a high resolution as a second resolution higher than the standard resolution,	2
wherein the set of decoding targets, the set of first reference pictures, and the set of second reference pictures have the same value in spatial resolution.	2
a step of implementing a process for a prescribed demultiplexing on a sequence of input encoded bits, outputting at least a first and a second sequence of encoded bits;	3
a step of acquiring the first sequence of encoded bits obtained with a standard resolution through the process for the prescribed demultiplexing, implementing thereon a process for a prescribed first decoding, creating a sequence of decoded pictures with the standard resolution;	3
a step of acquiring the sequence of decoded pictures created with the standard resolution through the process for the prescribed first decoding, working on the sequence of decoded pictures to implement an interpolation of pixels with a first enlargement, creating a sequence of super-resolution enlarged decoded pictures with a first resolution higher than the standard resolution;	3

a step of acquiring the sequence of super-resolution enlarged decoded pictures created through the process for the prescribed super-resolution enlargement working on the sequence of super-resolution enlarged decoded pictures to implement a process for a first resolution conversion, creating a sequence of super-resolution decoded pictures with a standard resolution;	3
a step of acquiring the second sequence of encoded bits obtained with a standard resolution through the process for the prescribed demultiplexing as a set of decoding targets, the sequence of decoded pictures created with the standard resolution through the process for the prescribed first decoding as a set of first reference pictures, and the sequence of super-resolution decoded pictures created with the standard resolution through the process for the prescribed resolution conversion as a set of second reference pictures, and selecting one of the set of first reference pictures and the set of second reference pictures based on reference picture selection information to implement a combination of processes for a prescribed prediction and a prescribed second decoding being a decoding with an extension of the standard resolution, based on the set of decoding targets and the set of selected reference pictures to create a sequence of super-resolution pictures decoded with the standard resolution; and	3
a step of acquiring the sequence of decoded pictures created with the standard resolution through the process for the prescribed first decoding working on the sequence of decoded pictures to implement an interpolation of pixels with the second enlargement, creating a sequence of enlarged decoded pictures with a high resolution as a second resolution higher than the standard resolution,	3
wherein the set of decoding targets, the set of first reference pictures, and the set of second reference pictures have the same value in spatial resolution.	3

a step of implementing a process for a prescribed demultiplexing on a sequence of input encoded bits, outputting at least a first and a second sequence of encoded bits;	4
a step of acquiring the first sequence of encoded bits obtained with a standard resolution through the process for the prescribed demultiplexing, implementing thereon a process for a prescribed first decoding, creating a sequence of decoded pictures with the standard resolution;	4
a step of acquiring the sequence of decoded pictures created with the standard resolution through the process for the prescribed first decoding, working on the sequence of decoded pictures to implement an interpolation of pixels with a first enlargement, creating a sequence of super-resolution enlarged decoded pictures with a first resolution higher than the standard resolution;	4
a step of acquiring the sequence of super-resolution enlarged decoded pictures created through the process for the prescribed super-resolution enlargement working on the sequence of super-resolution enlarged decoded pictures to implement a process for a first resolution conversion, creating a sequence of super-resolution decoded pictures with a standard resolution;	4
a step of acquiring the second sequence of encoded bits obtained with a standard resolution through the process for the prescribed demultiplexing as a set of decoding targets, the sequence of decoded pictures created with the standard resolution through the process for the prescribed first decoding as a set of first reference pictures, and the sequence of super-resolution decoded pictures created with the standard resolution through the process for the prescribed resolution conversion as a set of second reference pictures, and selecting one of the set of first reference pictures and the set of second reference pictures based on reference picture selection information to implement a	4

combination of processes for a prescribed prediction and a prescribed second decoding being a decoding with an extension of the standard resolution, based on the set of decoding targets and the set of selected reference pictures to create a sequence of super-resolution pictures decoded with the standard resolution; and	
a step of acquiring the sequence of decoded pictures created with the standard resolution through the process for the prescribed first decoding, working on the sequence of decoded pictures to implement an interpolation of pixels with the second enlargement creating a sequence of enlarged decoded pictures with a high resolution as a second resolution higher than the standard resolution,	4
wherein the first resolution is different from the second resolution,	4
wherein the standard resolution of the second sequence of encoded bits is the same as the standard resolution of the super-resolution decoded pictures,	4
and wherein the set of decoding targets, the set of first reference pictures, and the set of second reference pictures have the same value in spatial resolution.	4
a step of implementing a first combination of processes for an encoding and a decoding on a sequence of moving pictures with a standard resolution, creating a first sequence of encoded bits and a set of decoded pictures with the standard resolution;	8
a step of implementing an interpolation of pixels with a first enlargement on the sequence of moving pictures with the standard resolution, creating a set of super-resolution enlarged pictures with a first resolution higher than a standard resolution;	8
a step of implementing a process for a first resolution conversion on the set of super-resolution enlarged pictures, creating a set of super-resolution enlarged and converted pictures with a standard resolution;	8

a step of acquiring the set of decoded pictures with the standard resolution to work on the sequence of decoded pictures to implement an interpolation of pixels with a second enlargement to create a set of super-resolution enlarged decoded pictures with a second resolution higher than the standard resolution;	8
a step of working on the set of super-resolution enlarged decoded pictures to implement process for a second resolution conversion to create a set of super-resolution enlarged and converted decoded pictures with a standard resolution; and	8
having the set of super-resolution enlarged and converted pictures as a set of encoding target pictures, the set of decoded pictures as a set of first reference pictures, and the set of super-resolution enlarged and converted decoded pictures as a set of second reference pictures,	8
selecting one of the set of first reference pictures and the set of second reference pictures to create reference picture selection information to identify the set of selected reference pictures to implement a second process for encoding to create a second sequence of encoded bits based on the set of encoding target pictures and the set of selected reference pictures, and	8
implementing a third process for encoding for the reference picture selection information to create a sequence of encoded bits of the reference picture selection information,	8
wherein the set of encoding target pictures, the set of first reference pictures, and the set of second reference pictures have the same value in spatial resolution.	8
a step of implementing a first combination of processes for an encoding and a decoding on a sequence of moving pictures with a standard resolution, creating a first sequence of encoded bits and a set of decoded pictures with the standard resolution;	9
a step of implementing an interpolation of pixels with a first enlargement on the sequence of moving pictures with the standard	9

resolution, creating a set of super-resolution enlarged pictures with a first resolution higher than the standard resolution;	
a step of implementing process for a first resolution conversion on the set of super-resolution enlarged pictures, creating a set of super-resolution enlarged and converted pictures with a standard resolution;	9
a step of acquiring the set of decoded pictures with the standard resolution from the first encoder to work on the sequence of decoded pictures to implement an interpolation of pixels with a second enlargement to create a set of super-resolution enlarged decoded pictures with a second resolution higher than the standard resolution;	9
a step of working on the set of super-resolution enlarged decoded pictures to implement a process for a second resolution conversion to create a set of super-resolution enlarged and converted decoded pictures with a standard resolution; and	9
having the set of super-resolution enlarged and converted pictures as a set of encoding target pictures, the set of decoded pictures as a set of first reference pictures, and the set of super-resolution enlarged and converted decoded pictures as a set of second reference pictures,	9
selecting one of the set of first reference pictures and the set of second reference pictures to create reference picture selection information to identify the set of selected reference pictures to implement a second process for encoding to create a second sequence of encoded bits based on the set of encoding target pictures and the set of selected reference pictures, and	9
implementing a third process for encoding for the reference picture selection information to create a sequence of encoded bits of the reference picture selection information,	9
wherein the set of encoding target pictures, the set of first reference pictures, and the set of second reference pictures have the same value in spatial resolution.	9

wherein the second encoder divides an encoding target picture into a plurality of regions to select one of the set of first reference pictures and the set of second reference pictures for each divided region.	10
wherein the second decoder divides a decoding target into a plurality of regions to select one of the set of first reference pictures and the set of second reference pictures for each divided region.	11
standard resolution	1, 2, 3, 4, 8, 9
a first combination of processes for an encoding and a decoding	1, 8, 9
a prescribed first decoding	2, 3, 4

b) Lack of Enablement and/or Lack of Written Description

35 U.S.C. § 112, paragraph 1, includes an enablement requirement. *See* 35 U.S.C. § 112, ¶ 1 ("The specification shall contain a written description . . . of the manner and process of making and using [the invention] in such full, clear, concise and exact terms as to enable any person skilled in the art to which it pertains, or with which it is most nearly connected, to make and use the same.").

To satisfy the enablement requirement of 35 U.S.C. § 112, paragraph 1, the disclosure "must teach those skilled in the art how to make and use the full scope of the claimed invention without 'undue experimentation.'" *Genentech, Inc. v. Novo Nordisk, A/S*, 108 F.3d 1361, 1365 (Fed. Cir. 1997) (citations omitted). Moreover, "[i]t is the specification, not the knowledge of one skilled in the art, that must supply the novel aspects of [the] invention in order to constitute adequate enablement." *Genentech*, 108 F.3d at 1366. The Federal Circuit has enumerated several factors to consider in determining whether a disclosure would require "undue experimentation": (1) the quantity of experimentation necessary; (2) the amount of direction or guidance presented; (3) the presence or absence of working examples; (4) the nature of the invention; (5) the state of

the prior art; (6) the relative skill of those in the art; (7) the predictability or unpredictability of the art; and (8) the breadth of the claims. *In re Wands*, 858 F.2d 731, 737 (Fed. Cir. 1988).

To satisfy the written description requirement, the description must "clearly allow persons of ordinary skill in the art to recognize that [the inventor] invented what is claimed." *Ariad Pharmaceuticals, Inc. v. Eli Lilly and Co.*, 598 F.3d 1336, 1351 (Fed. Cir. 2010) (internal citation omitted). In other words, the test for sufficiency is whether the disclosure of the application relied upon reasonably conveys to those skilled in the art that the inventor had possession of the claimed subject matter as of the filing date. *Id.* The test requires an objective inquiry into the four corners of the specification from the perspective of a person of ordinary skill in the art. Based on that inquiry, the specification must describe an invention understandable to that skilled artisan and show that the inventor actually invented the invention claimed. "Whether the written description requirement is satisfied is a fact-based inquiry that will depend on the nature of the claimed invention, and the knowledge of one skilled in the art at the time an invention is made and a patent application is filed." *Carnegie Mellon Univ. v. Hoffmann La Roche Inc.*, 541 F.3d 1115, 1122 (Fed. Cir. 2008). Actual "possession" or reduction to practice outside of the specification is not enough. Rather, as stated above, it is the specification itself that must demonstrate possession. A description that merely renders the invention obvious does not satisfy the requirement. *Lockwood v. Am. Airlines*, 107 F.3d 1565, 1571-72 (Fed. Cir. 1997).

All Asserted Claims of the '995 patent are invalid for lack of enablement and/or lack written description because they do not contain an enabling or sufficient disclosure of the specific hardware structure, reference software, source code, and/or other specific details of the invention that would enable a person skilled in the art to practice the claimed invention without undue experimentation.

For example, Claims 1, 8 and 9 and their dependent claims fail to satisfy the requirements of 35 U.S.C. § 112(1) because the specification fails to provide an enabling disclosure of "a first combination of processes for an encoding and a decoding." Therefore, the specification fails to provide a written description of using the of "a first combination of processes for an encoding and a decoding" as recited in the above-listed claims or teach a person of ordinary skill how to make or use the same. Further, a POSA would not understand the specification to enable every possible method of encoding and decoding, yet the claims purport to cover all possible methods. By way of further example, one of ordinary skill in the art would not understand the specification to enable implementing an interpolation of pixels with a first enlargement to create a set of super-resolution enlarged pictures with a first resolution higher than the standard resolution. As yet another example, one of ordinary skill in the art would not understand the specification to enable a second decoder configured to acquire the second sequence of encoded bits obtained with a standard resolution at the demultiplexer as a set of decoding targets, the sequence of decoded pictures created with the standard resolution at the first decoder as a set of first reference pictures, and the sequence of super-resolution decoded pictures created with the standard resolution at the first resolution converter as a set of second reference pictures, and select one of the set of first reference pictures and the set of second reference pictures based on reference picture selection information to implement a combination of processes for a prescribed prediction and a prescribed second decoding being a decoding with an extension of the standard resolution, to create a sequence of super-resolution pictures decoded with the standard resolution based on the set of decoding targets and the set of selected reference pictures.

For example, Claims 2, 3, and 4 fail to satisfy the requirements of 35 U.S.C. § 112(1) because the specification fails to provide an enabling disclosure of "a prescribed first decoding."

Therefore, the specification fails to provide a written description of using "a prescribed first decoding" as recited in the above-listed claims or teach a person of ordinary skill how to make or use the same. Further, a POSA would not understand the specification to enable every possible method of decoding, yet the claims purport to cover all possible methods.

The following limitations recited in the '995 Patent Asserted Claims are indefinite in whole, in part or in combination, as summarized below:[21]

Table 6-C: Invalid Terms under 35 U.S.C. § 112(1) for the '995 Patent

Term	Relevant Claim(s)
a first encoder configured to work on a subsequence of a sequence of moving pictures with a standard resolution to implement a first combination of processes for an encoding and a decoding to create a first sequence of encoded bits and a set of decoded pictures with the standard resolution;	1
a first super-resolution enlarger configured to work on the subsequence of the sequence of moving pictures with the standard resolution to implement an interpolation of pixels with a first enlargement to create a set of super-resolution enlarged pictures with a first resolution higher than the standard resolution;	1
a first resolution converter configured to work on the set of super-resolution enlarged pictures to implement a process for a first resolution conversion to create a set of super-resolution enlarged and converted pictures with a standard resolution;	1
a second super-resolution enlarger configured to acquire the set of decoded pictures with the standard resolution from the first encoder to work on the sequence of decoded pictures to implement an interpolation of pixels with a second enlargement to create a set of super-resolution enlarged decoded pictures	1

[21] Listed claims also include all Asserted Claims dependent thereon, even if those claims are not individually listed.

with a second resolution higher than the standard resolution;	
a second resolution converter configured to work on the set of super-resolution enlarged decoded pictures to implement a process for a second resolution conversion to create a set of super-resolution enlarged and converted decoded pictures with a standard resolution; and	1
a demultiplexer configured to work on a sequence of input encoded bits to implement a process for a prescribed demultiplexing to output at least a first and a second sequence of encoded bits;	2
a first decoder configured to acquire the first sequence of encoded bits obtained with a standard resolution at the demultiplexer to implement thereon a process for a prescribed first decoding to create a sequence of decoded pictures with a standard resolution;	2
a first super-resolution enlarger configured to acquire the sequence of decoded pictures created with a standard resolution at the first decoder to work on the sequence of decoded pictures to implement an interpolation of pixels with a first enlargement to create a sequence of super-resolution enlarged decoded pictures with a first resolution higher than a standard resolution;	2
a first resolution converter configured to acquire the sequence of super-resolution enlarged decoded pictures created at the first super-resolution enlarger to work on the sequence of super-resolution enlarged decoded pictures to implement a process for a prescribed resolution conversion to create a sequence of super-resolution decoded pictures with a standard resolution;	2
a second decoder configured to acquire the second sequence of encoded bits obtained with a standard resolution at the demultiplexer as a set of decoding targets, the sequence of decoded pictures created with the standard resolution at the first decoder as a set of first reference pictures, and the sequence of super-resolution decoded pictures created with	2

the standard resolution at the first resolution converter as a set of second reference pictures, and select one of the set of first reference pictures and the set of second reference pictures based on reference picture selection information to implement a combination of processes for a prescribed prediction and a prescribed second decoding being a decoding with an extension of the standard resolution, to create a sequence of super-resolution pictures decoded with the standard resolution based on the set of decoding targets and the set of selected reference pictures; and	
a second resolution converter configured to acquire the sequence of decoded pictures with the standard resolution from the first decoder to work on the sequence of decoded pictures to implement an interpolation of pixels with the second enlargement to create a sequence of enlarged decoded pictures with a high resolution as a second resolution higher than the standard resolution,	2
wherein the set of decoding targets, the set of first reference pictures, and the set of second reference pictures have the same value in spatial resolution.	2
a step of implementing a process for a prescribed demultiplexing on a sequence of input encoded bits, outputting at least a first and a second sequence of encoded bits;	3
a step of acquiring the first sequence of encoded bits obtained with a standard resolution through the process for the prescribed demultiplexing, implementing thereon a process for a prescribed first decoding, creating a sequence of decoded pictures with the standard resolution;	3
a step of acquiring the sequence of decoded pictures created with the standard resolution through the process for the prescribed first decoding, working on the sequence of decoded pictures to implement an interpolation of pixels with a first enlargement, creating a sequence of super-resolution enlarged decoded pictures with a first resolution higher than the standard resolution;	3

a step of acquiring the sequence of super-resolution enlarged decoded pictures created through the process for the prescribed super-resolution enlargement working on the sequence of super-resolution enlarged decoded pictures to implement a process for a first resolution conversion, creating a sequence of super-resolution decoded pictures with a standard resolution;	3
a step of acquiring the second sequence of encoded bits obtained with a standard resolution through the process for the prescribed demultiplexing as a set of decoding targets, the sequence of decoded pictures created with the standard resolution through the process for the prescribed first decoding as a set of first reference pictures, and the sequence of super-resolution decoded pictures created with the standard resolution through the process for the prescribed resolution conversion as a set of second reference pictures, and selecting one of the set of first reference pictures and the set of second reference pictures based on reference picture selection information to implement a combination of processes for a prescribed prediction and a prescribed second decoding being a decoding with an extension of the standard resolution, based on the set of decoding targets and the set of selected reference pictures to create a sequence of super-resolution pictures decoded with the standard resolution; and	3
a step of acquiring the sequence of decoded pictures created with the standard resolution through the process for the prescribed first decoding working on the sequence of decoded pictures to implement an interpolation of pixels with the second enlargement, creating a sequence of enlarged decoded pictures with a high resolution as a second resolution higher than the standard resolution,	3
wherein the set of decoding targets, the set of first reference pictures, and the set of second reference pictures have the same value in spatial resolution.	3

a step of implementing a process for a prescribed demultiplexing on a sequence of input encoded bits, outputting at least a first and a second sequence of encoded bits;	4
a step of acquiring the first sequence of encoded bits obtained with a standard resolution through the process for the prescribed demultiplexing, implementing thereon a process for a prescribed first decoding, creating a sequence of decoded pictures with the standard resolution;	4
a step of acquiring the sequence of decoded pictures created with the standard resolution through the process for the prescribed first decoding, working on the sequence of decoded pictures to implement an interpolation of pixels with a first enlargement, creating a sequence of super-resolution enlarged decoded pictures with a first resolution higher than the standard resolution;	4
a step of acquiring the sequence of super-resolution enlarged decoded pictures created through the process for the prescribed super-resolution enlargement working on the sequence of super-resolution enlarged decoded pictures to implement a process for a first resolution conversion, creating a sequence of super-resolution decoded pictures with a standard resolution;	4
a step of acquiring the second sequence of encoded bits obtained with a standard resolution through the process for the prescribed demultiplexing as a set of decoding targets, the sequence of decoded pictures created with the standard resolution through the process for the prescribed first decoding as a set of first reference pictures, and the sequence of super-resolution decoded pictures created with the standard resolution through the process for the prescribed resolution conversion as a set of second reference pictures, and selecting one of the set of first reference pictures and the set of second reference pictures based on reference picture selection information to implement a combination of processes for a prescribed	4

prediction and a prescribed second decoding being a decoding with an extension of the standard resolution, based on the set of decoding targets and the set of selected reference pictures to create a sequence of super-resolution pictures decoded with the standard resolution; and	
a step of acquiring the sequence of decoded pictures created with the standard resolution through the process for the prescribed first decoding, working on the sequence of decoded pictures to implement an interpolation of pixels with the second enlargement creating a sequence of enlarged decoded pictures with a high resolution as a second resolution higher than the standard resolution,	4
wherein the first resolution is different from the second resolution,	4
wherein the standard resolution of the second sequence of encoded bits is the same as the standard resolution of the super-resolution decoded pictures,	4
and wherein the set of decoding targets, the set of first reference pictures, and the set of second reference pictures have the same value in spatial resolution.	4
a step of implementing a first combination of processes for an encoding and a decoding on a sequence of moving pictures with a standard resolution, creating a first sequence of encoded bits and a set of decoded pictures with the standard resolution;	8
a step of implementing an interpolation of pixels with a first enlargement on the sequence of moving pictures with the standard resolution, creating a set of super-resolution enlarged pictures with a first resolution higher than a standard resolution;	8
a step of implementing a process for a first resolution conversion on the set of super-resolution enlarged pictures, creating a set of super-resolution enlarged and converted pictures with a standard resolution;	8
a step of acquiring the set of decoded pictures with the standard resolution to work on the sequence of decoded pictures to implement an	8

interpolation of pixels with a second enlargement to create a set of super-resolution enlarged decoded pictures with a second resolution higher than the standard resolution;	
a step of working on the set of super-resolution enlarged decoded pictures to implement process for a second resolution conversion to create a set of super-resolution enlarged and converted decoded pictures with a standard resolution; and	8
having the set of super-resolution enlarged and converted pictures as a set of encoding target pictures, the set of decoded pictures as a set of first reference pictures, and the set of super-resolution enlarged and converted decoded pictures as a set of second reference pictures,	8
selecting one of the set of first reference pictures and the set of second reference pictures to create reference picture selection information to identify the set of selected reference pictures to implement a second process for encoding to create a second sequence of encoded bits based on the set of encoding target pictures and the set of selected reference pictures, and	8
implementing a third process for encoding for the reference picture selection information to create a sequence of encoded bits of the reference picture selection information,	8
wherein the set of encoding target pictures, the set of first reference pictures, and the set of second reference pictures have the same value in spatial resolution.	8
a step of implementing a first combination of processes for an encoding and a decoding on a sequence of moving pictures with a standard resolution, creating a first sequence of encoded bits and a set of decoded pictures with the standard resolution;	9
a step of implementing an interpolation of pixels with a first enlargement on the sequence of moving pictures with the standard resolution, creating a set of super-resolution enlarged pictures with a first resolution higher than the standard resolution;	9

a step of implementing process for a first resolution conversion on the set of super-resolution enlarged pictures, creating a set of super-resolution enlarged and converted pictures with a standard resolution;	9
a step of acquiring the set of decoded pictures with the standard resolution from the first encoder to work on the sequence of decoded pictures to implement an interpolation of pixels with a second enlargement to create a set of super-resolution enlarged decoded pictures with a second resolution higher than the standard resolution;	9
a step of working on the set of super-resolution enlarged decoded pictures to implement a process for a second resolution conversion to create a set of super-resolution enlarged and converted decoded pictures with a standard resolution; and	9
having the set of super-resolution enlarged and converted pictures as a set of encoding target pictures, the set of decoded pictures as a set of first reference pictures, and the set of super-resolution enlarged and converted decoded pictures as a set of second reference pictures,	9
selecting one of the set of first reference pictures and the set of second reference pictures to create reference picture selection information to identify the set of selected reference pictures to implement a second process for encoding to create a second sequence of encoded bits based on the set of encoding target pictures and the set of selected reference pictures, and	9
implementing a third process for encoding for the reference picture selection information to create a sequence of encoded bits of the reference picture selection information,	9
wherein the set of encoding target pictures, the set of first reference pictures, and the set of second reference pictures have the same value in spatial resolution.	9
wherein the second encoder divides an encoding target picture into a plurality of regions to select one of the set of first reference	10

pictures and the set of second reference pictures for each divided region.	
wherein the second decoder divides a decoding target into a plurality of regions to select one of the set of first reference pictures and the set of second reference pictures for each divided region.	11
standard resolution	1, 2, 3, 4, 8, 9
a first combination of processes for an encoding and a decoding	1, 8, 9
a prescribed first decoding	2, 3, 4

D. U.S. Patent No. 9,042,448

1. Alleged Priority Date

A "patent may only claim priority to an earlier application if the earlier application fulfills the requirements of § 112, first paragraph, which requires, in part, that the application 'shall contain a written description of the invention, and of the manner and process of making and using it, in such full, clear, concise, and exact terms as to enable any person skilled in the art to which it pertains, or with which it is most nearly connected, to make and use the same.'" *Chiron Corp. v. Genentech, Inc.*, 363 F.3d 1247, 1253 (Fed. Cir. 2004). ACT has failed to establish that any Asserted Claim is entitled to a priority date based on the filing of any earlier application. Defendant reserves its right to identify additional bases for this contention in response to ACT's subsequent arguments and positions, any amendments that ACT makes to its own contentions, the Court's claim construction, or information uncovered during further discovery.

Defendant does not agree, and therefore disputes, that the Asserted Claims of the '448 patent are entitled to the priority date asserted by ACT. Additionally, ACT provides no contention nor any evidence in its infringement contentions demonstrating that the '448 patent was invented earlier than the effective filing date of its earliest foreign application, Japan Patent Application No. P2008-142433, filed May 30, 2008. *See* Infringement Contentions at 8. Thus, the '448 patent is not entitled to any date of invention earlier than the effective filing date of its earliest foreign

application, which ACT alleges is May 30, 2008. Defendant's disclosure of prior art is premised on the alleged priority date as identified in Plaintiff's Infringement Contentions. Defendant contends Plaintiff is not entitled to the alleged priority date and reserves the right to modify, amend, or supplement its invalidity contentions with additional prior art references if any Asserted Claim is shown to not be entitled to the respective alleged priority date. Defendant objects to ACT alleging or providing evidence of any earlier date of invention; all such evidence is fully within ACT's control and to the extent ACT claims an earlier priority date, it needed to do so in its infringement contentions. To the extent ACT is able and permitted to assert an earlier date of invention for any of the Asserted Patents, Defendant may modify, amend, and/or supplement these Invalidity Contentions, including, but not limited to its identification and production of additional prior art.

2. General State of the Art at the Time of the Alleged Invention

The claimed invention of the '448 patent is directed to using super resolution enlargement when encoding and decoding video.

The prior art identified below (including the "References Cited" on the face of the '448 patent) may provide background and context pertinent to the teachings, and interpretation of, the prior art referenced by the claim charts.

For example, the '448 patent admits that super resolution enlargement was well known in the art at the time the application leading to the '448 patent was filed, including citations to Sung, Tom, Schulz, and Stark. Thus, it was well known in the art at the time the application leading to the '448 patent was filed, that super resolution enlargement can be used to enhance coding of low resolution videos. *See, e.g.*, Sung, Tom, Schulz, Stark, Martins, Sesai, Fogg 236, Nagumo 519, Schreiber, Wedi 380, Suzuki 952, Margulis 807, Keren.

In addition, the ’448 patent admits that hierarchical encoding with a base layer and enhancement layers was well known in the art at the time the application leading to the ’448 patent was filed, including citations to standards including MPEG-4 SVC. Thus, it was well known in the art at the time the application leading to the ’448 patent was filed, that the encoding and decoding of such base and enhancement layers may involve resolution conversion to certain desired resolutions, and that such conversion may include super resolution enlargement. *See, e.g.*, Sakazume, Sung, Tom, Schulz, Stark, Martins, Segall, Sesai, Fogg 236, Nagumo 519, Schreiber, Wedi 380, Suzuki 952, Margulis 807, Ong, He, Wang, Yagasaki, Nakemura, Schwarz, Tsai, Garrido 853, Lim 000, Garrido 868, Slinger, Gu, Lim 206, Kondo, Hannuksela. In particular, it was understood that resolution conversion could be used to generate any output resolution required. *See, e.g.*, Martins.

In addition to the prior art admitted by the ’448 patent, the references that anticipate and/or render obvious one or more Asserted Claims are identified in the claim charts of Exhibits D01-D40 (collectively, “Appendix D”) and in Section III.D.3, *infra*.

3. Disclosure of Prior Art References (P.R. 3-3(a))

Pursuant to P.R. 3-3(a), Defendant identifies at least the following prior art now known to it to anticipate and/or render obvious one or more of the Asserted Claims of the ’448 patent, either expressly, implicitly, or inherently as understood by a person having ordinary skill in the art.

a) Prior Art Patents, Patent Applications, And Publications

In addition to the prior art admitted by the ’448 patent, the following patents, patent applications, and publications are prior art to the ’448 patent under at least 35 U.S.C. §§ 102(a), (b), (e), and/or (g), and anticipate and/or render obvious the Asserted Claims of the ’448 patent:

Table 1-D: Prior Art Patents and Patent Applications for the ’448 Patent

Patent or Patent Application No.	Country of Origin	Date of Issue (if Issued Patent)	Exhibit[22]	Anticipates	Renders Obvious
US 7,302,002B2 ("Yagasaki")	United States	11/27/2007	D1		X
US 7,496,236B2 ("Fogg 236")	United States	2/24/2009	D2		X
US 7,853,088 ("Sakazume")	United States	12/14/2010	D3		X
US6968005 (US20020021752A1) ("Hannuksela")	United States	2/21/2002	D4		X
US20020063807A1 ("Margulis 807")	United States	5/30/2002	D5		X
US7253831 (US20020092030A1) ("Gu")	United States	7/11/2002	D6		X
US20040017853A1 ("Garrido 853")	United States	1/29/2004	D7		X
US7310373 (US20040151248A1) ("Kondo")	United States	8/5/2004	D8		X
US20050019000A1 ("Lim 000")	United States	1/27/2005	D9		X
US7206347 (US20050058206A1) ("Lim 206")	United States	3/17/2005	D10		X
US20060126952A1 ("Suzuki 952")	United States	6/15/2006	D11		X
US 20080117975A1 ("Sasai")	United States	5/22/2008	D12		X
US20080137753 ("He")	United States	6/12/2008	D13		X
US 20080175519 ("Nagumo 519")	United States	7/24/2008	D14		X
US20090274380A1 ("Wedi 380")	United States	11/5/2009	D15		X
EP 1811786A1 ("Wang")	EU	7/25/2007	D16		X
JP 2005123913A ("Nakamura")	United States	5/12/2005	D17		X

[22] Exhibit numbers have only been listed for primary references. Additional prior art references that disclose and render obvious certain elements are described in Sections III.D.4-.5 *infra*, as well as the discussion of the general state of the art in Section III.D.2, *supra*.

JP 2007316161A (“Ong”)	Japan	12/6/2007	D18		X
WO2003102868A2 (“Garrido 868”)	United States	12/11/2003	D19		X
WO2007091049A1 (“Slinger”)	United States	8/16/2007	D20		X
US 5,122,873A (“Golin”)	United States	6/16/1992			X
US 5,677,735A (“Ueno”)	United States	10/14/1997			X
US5926225 (“Fukuhara”)	United States	7/20/1999			X
US 6,173,013 B1 (“Suzuki 013”)	United States	1/9/2001			X
US6205177 (“Girod 177”)	United States	3/20/2001			X
US6249318 (“Girod 318”)	United States	6/19/2001			X
US 6,340,994B1 (“Margulis 994”)	United States	1/22/2002			X
US 6,393,152B2 (“Takahashi”)	United States	5/21/2002			X
US 6,400,768 (B1) (“Nagumo 768”)	United States	6/4/2002			X
US6560284 (“Girod 284”)	United States	5/6/2003			X
US 6,563,876 (“Boyce 876”)	United States	5/13/2003			X
US 6.621.865 (“Yu”)	United States	9/16/2003			X
US 6,690,724B1 (“Kadono”)	United States	2/10/2004			X
US6807231 (“Wiegand”)	United States	10/19/2004			X
US 6,975,768B2 (“Yamaguchi”)	United States	12/13/2005			X
US 7,379,496 B2 (“Holcomb”)	United States	5/27/2008			X
US 7,864,219 B2 (“Shimauchi”)	United States	1/4/2011			X
US 8,019,169B2 (“Kondo 169”)	United States	9/13/2011			X
US 20050195900A1 (“Han 900”)	United States	9/8/2005			X
US 2005/0196054 (“Kirihara”)	United States	9/8/2005			X

US 2005/0259752 ("Iwata")	United States	11/24/2005			X
US 20060114999A1 ("Han 999")	United States	6/1/2006			X
US 2006/0126952 ("Suzuki 952")	United States	1/15/2006			X
US 20060133677A1 ("Park")	United States	6/22/2006			X
US 20060146931A1 ("Boyce")	United States	7/6/2006			X
US 20070217519A1 ("Murayama")	United States	9/20/2007			X
US 20070253486A1 ("Jeon")	United States	11/1/2007			X
US 20070277078A1 ("Yamanashi")	United States	11/29/2007			X
US 20080043832 ("Barkley")	United States	2/21/2008			X
US 2008031328A1 ("Kimoto")	United States	2/7/2008			X
US 2008095450A1 ("Kirenko")	United States	4/24/2008			X
US 60/105,926 (Fogg 926)	United States	10/15/2002			X
US 60/123,300 (Fogg 300)	United States	10/15/2002			X
EP 1837826A1 ("Wedi 826")	EU	9/26/2007			X

Table 2-D: Prior Art Publications for the '448 Patent

Title	Date of Publication	Author/ Publisher	Exhibit[23]	Anticipates	Renders Obvious
Martins B, Forchhammer S, "A unified approach to restoration, deinterlacing and resolution enhancement in decoding MPEG-2 video," IEEE Trans.	2002	Martins	D21		X

[23] Exhibit numbers have only been listed for primary references. Additional prior art references that disclose and render obvious certain elements are described in Sections III.D.4-.5 *infra*, as well as the discussion of the general state of the art in Section III.D.2, *supra*.

On CSVT, Vol. 12, No. 9, pp. 803-811, Sep. 2002 ("Martins")					
Schreiber W F, Knapp C F, Kay N D, Synthetic Highs – An Experimental TV Bandwidth Reduction System, J. SMPTE, Vol. 6 ("Schreiber")	1958	Schreiber	D22		X
Schwarz – Overview of the scalable video coding extension of the H. 264 AVC standard ("Schwarz")	2007	Schwarz	D23		X
Segall, Spatial Scalability Within the H.264/AVC Scalable Video Coding Extension, IEEE Transactions on Circuits and Sys. for Video Tech., Vol. 17, No. 9, Sept. 2007 ("Segall")	2007	Segall	D24		X
Tsai R Y, Huang T S, Multiframe image restoration and registration, Advances in Computer Vision and Image Processing, Vol. 1, T. S. Huang, ed., Jai Press, pp. 317-319, 1984 ("Tsai")	1984	Tsai	D25		X
ITU-T Rec. H.263 (02/98) ("H.263")	Feb-98		D26		X
ITU-T Rec. H.264 (05/2003) ("H.264")	May-03		D27		X
Altunbasak, Super-Resolution Still and Video Reconstruction from MPEG-Coded Video ("Altunbasak")	2002	Altunbasak			X

H. Andrews and B. Hunt, Digital Image Restoration. Englewood Cliffs, NJ: Prentice-Hall, 1977 ("Andrews")	1977	Andrews			X
Sean Borman, Robert Stevenson, Spatial Resolution Enhancement of Low-Resolution Image Sequences A Comprehensive Review with Directions for Future Research, Lab. Image and Signal Analysis, University of Notre Dame, Tech. Rep., July 8, 1998 ("Borman")	1998	Borman			X
Chen D, Schultz R R, Extraction of high-resolution video stills from MPEG image sequences, in Proc. 1998 IEEE Int. Conf. Image Proc., Vol. 2, pp. 465-469, Oct. 1998 ("Chen-1998")	1998	Chen			X
Clark J, Palmer M, Lawrence P, A Transformation Method for the Reconstruction of Functions from Nonuniformly Spaced Samples, IEEE Trans. on ASSP, Vol. 33, No. 4, Oct. 1985 ("Clark")	1985	Clark			X
Dubois, Impact of scan conversion methods on the performance of	1995	Dubois			X

scalable video coding (“Dubois”)					
Erickson K J, Schultz R R, MPEG-1 super-resolution decoding for the analysis of video still images, 4th IEEE Southwest Symp. on Im. Anal. and Interp., Apr. 2000 (“Erickson”)	2000	Erickson			X
Galatsanos N R, Chin R T, Digital restoration of multichannel images, pp. 415-421, Mar. 1989 (“Galatsanos”)	1989	Galatsanos			X
Gaubatz M, A. Vosoughi A, Scaglione A, Hemami S S, Efficient, Low Complexity Encoding of Multiple, Blurred Noisy Downsampled Images Via Distributed Source Coding Principles, (“Gaubatz”)	2006	Gaubatz			X
Gunturk B K, Altunbasak Y, Mersereau R M, Multiframe resolution-enhancement methods for compressed video, IEEE Sig. Proc. Lett., Vol. 9, pp. 170-174, Jun. 2002 (“Gunturk”)	2002	Gunturk			X
Gunturk, Super-Resolution Reconstruction of Compressed Video Using Transform-Domain	2004	Gunturk 2004			X

Statistics (“Gunturk 2004”)					
Haskell et al., Digital Video: An Introduction to MPEG 2, Chapter 9 (“Haskell”)	2002	Haskell			X
Huang, Advances in the Scalable Amendment of H.264/AVC (“Huang 2007”)	2007	Huang			X
Hunt B R, Kubler O, Karhunen-Loève multispectral image restoration, part I-Theory, pp. 592-600, Jun. 1984 (“Hunt-1984”)	1984	Hunt			X
Hunt B R, Super-Resolution of Images-Algorithms, Principles, Performance, Intl, Jnl. of Imaging Sys. and Technol., Vol. 6, pp. 297-304, Wiley, 1995, Oct. 1995 (“Hunt 1995”)	1995	Hunt			X
Irani M, Peleg S, Improving Resolution by Image Registration, Graphical Models and Im. Proc., Vol. 53, No. 3, pp. 231-239, May 1991IEEEICASSP, May 2006 (“Irani”)	2006	Irani			X
Katsaggelos et al., Super Resolution of Images and Video (“Katsaggelos”)	2007	Katsaggelos			X
Keren D, Peleg S, Brada R, Image sequence enhancement using sub-pixel	1988	Keren			X

displacement s, Proc. CVPR '88-The Comp. Soc. Conf. on Computer Vision and Pattern Recognition, Jun. 1988 ("Keren")					
Kim S P, Bose N K, Reconstruction of 2-D Bandlimited Discrete Signals from Nonuniform Samples, IEE Proc., Vol. 137, No. 3, pp. 197 – 204, Jun. 1990 ("Kim")	1990	Kim			X
Kramer P, O. Hadar, Benois-Pineau J, Domenger J-P, Use of Motion Information in Super-Resolution Mosaicing, ICIP, Oct. 2006 ("Kramer")	2006	Kramer			X
Mahmood A, et al, Applied Multi-Dimensional Fusion, British Computer Society, Oxford U Press, 2007 ("Mahmood")	2007	Mahmood			X
Macchiavello, Motion-Based Side-Information Generation for a Scalable Wyner-Ziv Video Coder ("Macchiavella")	2007	Macchiave llo			X
Ohm, Advances in Scalable Video Coding ("Ohm")	2005	Ohm			X
Pandit, An extension of the reduced resolution update to complexity constrained spatial scalable video coding, Multimedia Systems and Applications VIII,	2005	Pandit			X

Volume 6015, pp. 65-76, Oct. 2005 (“Pandit”)					
Papoulis A, Generalized Sampling Expansion, IEEE Trans. on Ccts. and Sys., Vol. 24, No. 11, Nov. 1977 (“Papoulis”)	1977	Papoulis			X
“Super-Resolution Image Reconstruction: A Technical Overview, Sung Cheol. Park, Min Kyu Park, and Moon Gi Kang, IEEE Signal Proc. Magazine, Vol. 26, No. 3, pp. 21-36, 2003” (“Park”)	2003	Park			X
N with arbitrary sampling lattices and nonzero aperture time. IEEE Trans. on Im. Proc., Vol. 6, No. 8, pp. 10 (“Patti”)					
Patti A J, Sezan M I, Tekalp M. Superresolution video reconstruction with arbitrary sampling lattices and nonzero aperture time. IEEE Trans. on Im. Proc., Vol. 6, No. 8, pp. 10 (“Patti”)	1997	Patti			X
Rav-Acha A, Peleg S, Restoration of multiple images with motion blur in different directions, Proc. Fifth IEEE Workshop on Applications of Computer Vision,	2000	Rav-Acha			X

Dec. 2000 (“Rav-Acha”)					
Reichenbach S E, Li J, Restoration and reconstruction from overlapping images for multi-image fusion, IEEE Trans. on Geoscience and Remote Sensing, Vol. 39, No. 4, Apr. 2001 (“Reichenbach”)	2001	Reichenbach			X
E.G. Richardson, H.264 and MPEG-4 Video Compression, 2003 (“Richardson”)	2003	Richardson			X
Schultz R R, Stevenson R L, Extraction of high-resolution frames from video sequences, IEEE Trans. on Im. Proc., Vol. 5, No. 6, Jun. 199664-1078, Aug. 1997 (“Schultz”)	1997	Schultz			X
Segall, Prediction of High Resolution Data from Coded Low Resolution Grid within the Context of SVC (“Segall 2006”)	2006	Segall			X
Sikora, MPEG-1 and MPEG-2 Digital Video Coding Standards, Digital Consumer Electronics Handbook (“Sikora”)	1997	Sikora			X
Sikora, MPEG Digital Video-Coding Standards, IEEE Signal Processing Magazine, Sep. 1997 (“Sikora 2”)	1997	Sikora			X
Stark H, Oskoui P, High-resolution image recovery from	1989	Stark			X

image-plane arrays, using convex projections, Jnl. Opt. Soc. Am., Vol. 6, No. 11, Nov. 1989 (“Stark”)					
Tom B C, Katsaggelos A K, Reconstruction of a high-resolution image by simultaneous registration, restoration, and interpolation of low-resolution images, Proc. ICIP, Vol. 3 (“Tom”)	1995	Tom			X
Vetro, Video Transcoding Architectures and Techniques: An Overview (“Vetro”)	2003	Vetro			X
Wan, Adaptive format conversion for scalable video coding, Proceedings of the SPIE, Volume 4472, p. 390-401, Dec. 2001 (“Wan”)	2001	Wan			X
MPEG 95/0340 (“MPEG-95/0340”)	1995				X
MPEG 96/0654 (“MPEG-96/0654”)	1996				X
H.263 - q15c11 (“H.263-q15c11”)	1997				X
H.263 - 200501I (“H.263-Jan2005”)	2005				X
Adobe Delivers Flash Player 9 with H.264 Video Support (“Westgate”)	12/2007				X
List of codecs supported by Flash Player (“FP Codecs”)	8/2009				X
CoreCodec.com (“CoreCodec”)	Feb-06				X

CoreAVC Video Codec Decoder Editions (“CoreAVC”)	6/7/2006				X
Horizon Semiconductor’s HD DVD/Blu-ray decoder on a chip (“Kim 2007”)	10/2/2007	Kim			X
x264 guide (“x264 Guide”)	Apr-05				X
Encoding with the x264 codec (“x264”)	Dec-05				X
A Generalized Hypothetical Reference Decoder for H.264/AVC (“Ribas-Corbera”)	Jul-03	Ribas-Corbera			X
FFmpeg Documentation (“FFmpeg Documentation”)	Aug-08				X
Welcome to the datatype project! (“Helix 2006”)	2006				X
MSM7200 Chipset Solution (“MSM7200”)	2006				X
Touch Phone User Manual (“HTC Touch Dual”)	2007				X
HTC Touch Cruise User Manual (“HTC Touch Cruise”)	2008				X
HTC Pocket PC User Manual (“HTC Pocket PC”)					X
git.videolan.org/ffmpeg.git/commitdiff (Dec. 29, 2005) (“VLC commitdiff”)	Dec-05				X
VLC User Guide (“VLC Guide”)	2003				X

b) Prior Art Systems

Numerous systems are prior art to the '448 patent under at least 35 U.S.C. §§ 102(a), (b), (e), and/or (g), and anticipate and/or render obvious the Asserted Claims of the '448 patent. These systems also include physical implementations of prior art patents, patent applications, and publications identified herein that were known, made, used, sold, offered for sale, or imported into this country prior to the effective filing dates of the '448 patent, including those identified above and discussed in the sections below. Defendant's reference to a particular product, device, or software program in these contentions should be interpreted as a reference to the system itself as well as to any corresponding patents, publications, or product literature relating to the cited system. Although Defendant's investigation continues, information available to date indicates that numerous systems, including the H.264 System cited in Appendix D, were (1) known or used in this country before the alleged invention of the claimed subject matter of the Asserted Claims, (2) in public use and/or on sale in this country more than one year before the priority dates of the '448 patent, and/or (3) invented by another who did not abandon, suppress, or conceal, before the alleged invention of the claimed subject matter of the Asserted Claims.

In addition Defendant may rely on systems or other embodiments of the subject matter described in each of the references described above. Each of the references cited in support of the above systems may also be prior art individually under 35 U.S.C. §§ 102(a), (b), (e), and/or (g).

As discovery is ongoing, Defendant continues to investigate these items and may amend or supplement these contentions to include additional information or documents regarding such products and/or systems.

Table 3-D: Prior Art Systems and Inventions for the '448 Patent

Name of System or Invention	Date of Sale/Offer for Sale/Public Use/Known by Others	Exhibit	Anticipates	Renders Obvious

Systems Implementing H.263	2/1998	D28		X
Systems Implementing H.264	5/2003	D29		X
Adobe Flash Player	12/2007	D30		X
CoreAVC	2/2006	D31		X
FFmpeg	4/2006	D32		X
Helix	2006	D33		X
Hz7220	10/2007	D34		X
HTC	2007	D35		X
HRD	7/2003	D36		X
MSM7200	2006	D37		X
Quicktime	3/2005	D38		X
VLC Media Player	12/2005	D39		X
x264	4/2005	D40		X
MPEG-2 SAVI Decoder, Hyundai Electronics	1995			X
Apple iPhone	2007			X
Apple TV	2007			X
VidyoRoom	2008			X
VidyoPortal	2008			X
VidyoDesktop	2008			X
Cisco Webex Platform	2007			X
Polycom HDX4000	2007			X
RADVISION Interactive Video Platform	2006			X
Click to Meet™	2006			X
SCOPIA™	2006			X
NVIDIA GeForce 8600	2007			X
Radeon X1000-series	2005			X
ATI Technologies Unified Video Decoder	2008			X
STI7200	2007			X
Apple Mac OS X v10.4	2005			X
Microsoft Windows Vista	2006			X
Microsoft Xbox 360	2007			X
Broadcom BCM7411	2004			X
Conexant CX2418X	2004			X

Sony Playstation Portable	2005			X
Xbox Media Center (XBMC) / Kodi	2002			X
Sony Playstation	1994			X
Sony Playstation 2	2000			X
Sony Playstation Portable (PSP)	2004			X
Microsoft Xbox	2001			X
Microsoft Xbox 360	2005			X
Roku PhotoBridge HD1000 Product ("Roku Product")	2003			X
Roku PhotoBridge HD1000 System ("Roku System")	2003			X
Systems Implementing MPEG-2				X
Systems Implementing MPEG-4				X
Systems Implementing H.262				X
Systems Implementing VC1				X
Systems Implementing DivX				X
Systems Implementing Xvid				X

4. Anticipation and Obviousness Under P.R. 3-3(b) and (c)

35 U.S.C. § 102(a) provides that "[a] person shall be entitled to a patent unless . . . the invention was known or used by others in this country, or patented or described in a printed publication in this or a foreign country, before the invention thereof by the applicant for patent . . . ." To be anticipatory, a reference must describe, either expressly or inherently, each and every limitation and enable one of skill in the art to practice an embodiment of the claimed invention without undue experimentation. *Stored Value Solutions, Inc. v. Card Activation Technologies, Inc.*, 2012 WL 6097674, at *8 (Fed. Cir. 2012). A reference may anticipate inherently if a claim limitation that is not expressly disclosed "is necessarily present, or inherent, in the single

anticipating reference." *In re Aoyama*, 656 F.3d 1293, 1337 (Fed. Cir. 2011) (quoting *Schering Corp. v. Geneva Pharm., Inc.*, 339 F.3d 1373, 1377 (Fed. Cir. 2003)); *Akamai Technologies, Inc. v. Cable & Wireless Internet Services, Inc.*, 344 F.3d 1186, 1195 (Fed. Cir. 2003) (finding hierarchical DNS servers inherent in any Internet system).

Each of the Asserted Claims of the '448 patent is anticipated and/or rendered obvious by prior art. Pursuant to P.R. 3–3(b), Defendant identifies the prior art references that anticipate or render obvious an Asserted Claim in the claim charts of Appendix D, which are hereby incorporated by reference as if fully set forth herein, and in Section III.D.3.

Pursuant to P.R. 3-3(c), the claim charts of Appendix D, provide an identification where these prior art references teach or suggest each and every element of the Asserted Claims of the '448 patent. For each reference or combination of references suggested by each chart, Defendant indicates whether the prior art renders the claim anticipated and/or obvious pursuant to P.R. 3–3(b). In addition to contending that the Asserted Claims are invalid in view of the prior art references cited in the claim charts of Appendix D and admitted prior art, Defendant further contend that the Asserted Claims are invalid as anticipated and/or obvious under U.S.C. §§ 102(a) and/or (b) in view of public knowledge and uses and/or offers for sale of products and services related to the subject matter of the cited references. Reference to a particular circuitry, software program, device or product in the claim charts of Appendix D should be interpreted as a reference to the product itself and any corresponding patents, publications, or product literature cited in Appendix D that relates to the cited circuitry, software program, device, or product. In addition, Defendant may rely on other documents or things that have not yet been located to support its contentions regarding such prior art circuit(s), software program(s), device(s) or product(s) that are referenced in the charts.

Defendant incorporates by reference, as if set forth fully herein, all prior art cited during the prosecution of the ’448 patent. In addition, Defendant identifies and hereby incorporates by reference as if set forth fully herein the prior art references that anticipate or render obvious an asserted claim as described in a future reexaminations or *inter partes* reviews of the ’448 patent, if any, that a requestor may file or the PTO may grant.

Defendant further identifies and hereby incorporates by reference as if set forth fully herein the prior art references and invalidity contentions as described in any other lawsuits wherein invalidity contentions have been, or will be, provided regarding the ’448 patent, any foreign counterparts, or any parent or child patent of the ’448 patent. *Advanced Coding Techs. v. LG Elecs.*, No. 2:22-cv-00501-JRG (E.D. Tex. July 18, 2024), D.I. No. 148-3 (Ex. B Samsung’s May 30, 2024 Amended Invalidity and Subject Matter Eligibility Contentions); *Advanced Coding Techs. v. Apple, Inc.*, No. 2:22-cv-00572-JRG (E.D. Tex.), D.I. 42 (Third Amended Docket Control Order).

Defendant may use any and all portions of the publication, related publications, commercial embodiments of the publication, and other evidence that is discovered in these lawsuits to demonstrate and/or evidence the components, functionality, and capabilities of the devices and systems disclosed in the references charted.

Where Defendant identifies a particular figure in a prior art reference, the identification should be understood to encompass the caption and description of the figure, as well as any text relating to the figure in addition to the figure itself. Similarly, where an identified portion of text refers to a figure or other material, the identification should be understood to include the referenced figure or other material as well. It should be recognized that a person of ordinary skill in the art would generally read a prior art reference as a whole and in the context of other publications, literature, and general knowledge in the field. To understand and interpret any specific statement

or disclosure in a prior art reference, a person of ordinary skill in the art would rely upon other information including other publications and general scientific or engineering knowledge. Defendant therefore may rely upon other unidentified portions of the prior art references and on other publications and expert testimony to provide context and to aid understanding and interpretation of the identified portions.

Defendant may also rely upon other portions of the prior art references, other publications, and the testimony of experts to establish that the alleged inventions would have been obvious to a person of ordinary skill in the art, including the basis of modifying or combining certain cited references. To the extent any limitation is deemed not to be met by an item of prior art, then any purported differences are such that the claimed subject matter as a whole would have been obvious to one skilled in the art at the time of the alleged invention, in view of the state of the art and knowledge of those skilled in the art. To the extent that an element of an Asserted Claim is not anticipated, the claim is rendered obvious by combination with one or more other prior art references identified in Appendix D and the admitted prior art.

5. Obviousness Under P.R. 3-3(b) and (c)

a) Prior Art Rendering Asserted Claims Obvious

In general, a claimed invention is unpatentable under 35 U.S.C. § 103(a) if "the differences between the subject matter sought to be patented and the prior art are such that the subject matter as a whole would have been obvious at the time the invention was made to a person having ordinary skill in the art." 35 U.S.C. § 103(a); *Graham v. John Deere Co.*, 383 U.S. 1, 13-14 (1966). The ultimate determination of whether an invention is or is not obvious is a legal conclusion based on underlying factual inquiries including: "(1) the scope and content of the prior art; (2) the level of ordinary skill in the art; (3) the differences between the claimed invention and the prior art; and

(4) objective evidence of nonobviousness." *Miles Labs., Inc. v. Shandon, Inc.*, 997 F.2d 870, 877 (Fed. Cir. 1993). *See also Graham*, 383 U.S. at 17-18.

A claimed invention is obvious when a skilled artisan would have been motivated to combine the teaching of the prior art references to achieve the claimed invention, and the skilled artesian would have had a reasonable expectation of success in doing so. *See, e.g., Unigene Labs., Inc. v. Apotex, Inc.*, 655 F.3d 1352, 1360 (Fed. Cir. 2011). "Any need or problem known in the field of endeavor at the time of the invention and addressed by the patent can provide a reason for combining the elements in the manner claimed." *See KSR Int'l Co. v. Teleflex Inc.*, 550 U.S. 398, 420 (2007). While an analysis of any teaching, suggestion, or motivation to combine elements from different prior art references is useful in an obviousness analysis, such analyses should not be rigidly applied; the overall inquiry must be expansive and flexible, and must include the common sense and ordinary creativity of a person having ordinary skill in the art as part of the analysis. *Id.* at 419-21.

Pursuant to P.R. 3–3(b), Defendant identifies in Appendix A and in the sections below the prior art references that render obvious under 35 U.S.C. §103(a) the Asserted Claims of the '448 patent and include an identification of combinations showing the obviousness of the Asserted Claims in view of the prior art. Moreover, to the extent ACT contends that an element is not disclosed in any one of the references identified in Appendix D, such reference may be combined with one or more of the other references identified in Appendix D and/or the admitted prior art for such element, thereby rendering the claim invalid as obvious. Defendant may combine any prior art reference identified for the '448 patent with any other prior art reference identified for the '448 patent to assert obviousness. Even if a prior art reference does not expressly disclose all limitations as arranged or combined in the same manner as an asserted claim, a skilled artisan reading the

reference would at once envisage the claimed arrangement or combination. *See, e.g.*, *Kennametal Inc. v. Ingersoll Cutting Tool Co.*, 780 F.3d 1376 (Fed. Cir. 2015).

To the extent a finder of fact determines that a limitation of any of the Asserted Claims of the ’448 patent is not disclosed by one of the references or products and systems identified above pursuant to P.R. 3–3(a), the claims are nevertheless unpatentable as obvious because they contain nothing that constitutes patentable innovation. To the extent a finder of fact determines that a limitation of any of the Asserted Claims of the ’448 patent is not anticipated, no asserted claim goes beyond combining familiar elements according to known methods to achieve predictable results or does more than choose between clear alternatives known to those of ordinary skill in the art.

b) Teaching, Suggestion, or Motivation to Combine References

The U.S. Supreme Court decision in *KSR International Co. v. Teleflex Inc.*, 127 S. Ct. 1727, 1739 (2007) (“*KSR*”) held that a claimed invention can be obvious even if there is no explicit, written teaching, suggestion, or motivation for combining the prior art to produce that invention. Accordingly, no showing of a specific motivation to combine prior art is required to combine the references disclosed in the attached charts, as each combination of art would have no unexpected results, and, at most, would simply represent a known alternative to one of ordinary skill in the art. *See KSR*, 127 S. Ct. at 1739-40 (rejecting the Federal Circuit’s “rigid” application of the teaching, suggestion, or motivation to combine test, and instead espousing an “expansive and flexible” approach). A person of ordinary skill in the art is “a person of ordinary creativity, not an automaton” and “in many cases a person of ordinary skill in the art will be able to fit the teachings of multiple patents together like pieces of a puzzle.” *Id.* at 1742. “In determining whether the subject matter of a patent claim is obvious, neither the particular motivation nor the avowed purpose of the patentee controls. What matters is the objective reach of the claim.” *Id.* at 1741-42.

"Under the correct analysis, any need or problem known in the field of endeavor at the time of invention and addressed by the patent can provide a reason for combining the elements in the manner claimed." *Id.* at 1742. In particular, the Supreme Court emphasized the principle that "[t]he combination of familiar elements according to known methods is likely to be obvious when it does no more than yield predictable results." *Id.* at 1739. A key inquiry is whether the "improvement is more than the predictable use of prior art elements according to their established functions." *Id.* at 1740.

"Additionally, 'universal' motivations known in a particular field to improve technology provide 'a motivation to combine prior art references *even absent any hint of suggestion* in the references themselves.'" *Intel Corp. v. PACT XPP Schweiz AG*, 61 F.4th 1373, 1379 (Fed. Cir. 2023) (quoting *Intel Corp. v. Qualcomm Inc.*, 21 F.4th 784, 797-99 (Fed. Cir. 2021)) (original emphasis). Thus, motivations to combine, as well as the general state of the art, may be found in a variety of places including, but not limited to, in the references defined above, and the specification of the Asserted Patents.

The rationale to combine or modify prior art references is significantly stronger when the references seek to solve the same problem, come from the same field, and correspond well. *In re Inland Steel Co.*, 265 F.3d 1354, 1362 (Fed. Cir. 2001). The Federal Circuit allowed two references to be combined as invalidating art when "[the prior art] focus[es] on the same problem that the . . . patent addresses . . . Moreover, both [prior art references] come from the same field . . . Finally, the solutions to the identified problems found in the two references correspond well." *Id.* at 1362.

In *KSR*, the Supreme Court emphasized that inventions arising from ordinary innovation, ordinary skill, or common sense should not be patentable. *See KSR Int'l Co. v. Teleflex Inc.*, 550 U.S. 398 (2007). Although a patent challenger is not required to show that one of ordinary skill in

the art would have had a specific motivation to combine prior art references, such a showing may be helpful to the obviousness analysis. *Id.* at 418; *see also id.* at 402. Exemplary rationales that may support a conclusion of obviousness include:

- Combining various claimed elements known in the prior art according to known methods to yield a predictable result;
- Making a simple substitution of one or more known elements for another to obtain a predictable result;
- Using a known technique to improve a similar device or method in the same way;
- Applying a known technique to a known device or method ready for improvement to yield a predictable result;
- Choosing from a finite number of identified, predictable solutions with a reasonable expectation of success, such that the solution was one which was "obvious to try";
- A known work in one field of endeavor prompting variations of it for use either in the same field or a different field based on design incentives or other market forces in which the variations were predictable to one of ordinary skill in the art; and
- A teaching, suggestion, or motivation in the prior art that would have led one of ordinary skill in the art to modify the prior art reference or to combine the teachings of various prior art references to arrive at the claimed invention.

Although Defendant contends that no specific motivation to combine is necessary for the references cited in the attached exhibits, consistent with the Patent Rules, Defendant hereby identifies additional motivations and reasons to combine the cited art. These exemplary discussions regarding obviousness are illustrative, and not intended to be exhaustive. To the extent ACT challenges a combination of prior art with respect to a particular element, Defendant reserves all rights to supplement these Contentions to further specify the motivation to combine the prior art. Defendant may rely on cited or uncited portions of the prior art, other documents, and/or expert testimony to establish that a person of ordinary skill in the art would have been motivated to modify or combine the prior art so as to render the claims invalid as obvious.

First, one of skill in the art would have been motivated to combine one or more of: (i) the admitted prior art; and/or (ii) the references identified in Appendix D, with one another, because they all relate to common objectives and subject matter. The references share commonalities in terms of their general subject matter, as well as the types of equipment, products, and/or approaches they describe. Moreover, a person of ordinary skill would have been motivated to combine the above prior art based on the nature of the problem to be solved, the teachings of the prior art, and the knowledge of persons of ordinary skill in the art. The identified prior art addresses the same or similar technical issues and suggests the same or similar solutions to those issues. To the extent ACT challenges a combination of prior art with respect to a particular element, Defendant may supplement these contentions to further specify the motivation to combine the prior art. Defendant may rely on cited or uncited portions of the prior art, other documents, and/or expert testimony to establish that a person of ordinary skill in the art would have been motivated to modify or combine the prior art so as to render the claims invalid as obvious. For example, each of the following relate to the same technical issues: encoding and decoding of videos: Sakazume, Ong, Martins, Segall, He, Sasai, Wang, Fogg 236, Nagumo 519, Yagasaki, Nakamura, Schwarz, Schreiber, Garrido 853, Wedi 380, Suzuki 952, Lim 000, Garrido 868, Margulis 807, Slinger, Gu, Lim 206, Kondo, and Hannuksela.

Second, a person of ordinary skill in the art would have understood that the references identified in Appendix D explicitly or implicitly reference other prior art that share common authors or inventors, were published in the same journals, presented at the same conferences, were presented as proposals to standards working groups, and/or were developed at common companies, schools, or organizations, all of which would motivate one of skill in the art to combine them. Design incentives and other market forces would have prompted those combinations and

modifications. "When there is a design or market pressure to solve a problem and there are a finite number of identified, predictable solutions, a person of ordinary skill has good reason to pursue known options within his or her technical grasp." *KSR Int'l, 127 S. Ct.* at 1742. Moreover, some pieces of prior art refer to or discuss other pieces of prior art, illustrating the close technical relationship among the prior art. To the extent any piece of prior art refers to or discusses other pieces of prior art, either expressly or inherently, it would have been obvious to combine those pieces of prior art for that reason. For example, the '448 patent discloses that there are standard "techniques for moving picture encoding services such as by MPEG-1, -2, and -4/AVC/SVC specified to standardize under the ISO/IEC SC29WG11." For example, Sakazume, Garrido 853, Garrido 868, Schwarz, and Wang also reference these standards. It would have been obvious to combine any of the references in Appendix D and the admitted prior art with these established standards as each was intended to improve or build upon these standards. Further, to the extent that any reference discusses standardized coding methods, those references would have been compatible with each other for the same reason.

Third, the references identified in Appendix D and the admitted prior art are also directed to similar subject matter within that field. Additionally, any products, devices, or processes described in the references existed and/or were invented before or during the period in which the claimed inventions were developed, providing further motivation to combine them. For example, each of the following relate to video encoders and decoders around May 30, 2008: Sakazume, Ong, Martins, Segall, He, Sasai, Wang, Fogg 236, Nagumo 519, Yagasaki, Nakamura, Schwarz, Schreiber, Garrido 853, Wedi 380, Suzuki 952, Lim 000, Garrido 868, Margulis 807, Slinger, Gu, Lim 206, Kondo, and Hannuksela.

Fourth, one or more combinations of the admitted prior art and prior art references identified in Appendix A, pursuant to P.R. 3–3(b), would have been obvious because these references would have been combined with one another using: known methods to yield predictable results; known techniques in the same way; a simple substitution of one known, equivalent element for another to obtain predictable results; and/or a teaching, suggestion, or motivation in the prior art generally. The Asserted Claims are obvious, in part, because they merely arrange old elements, with each performing the same function that had been known, to perform and yield no more than what one of ordinary skill would expect from such an arrangement. Because there were a finite number of predictable solutions in the art of delivering content in response to a request, it would have been obvious to a person of ordinary skill in the art to pursue the known options. The identified prior art references merely use those familiar elements for their primary or well-known purposes and in a manner well within the ordinary level of skill in the art. Accordingly, common sense and the knowledge of the prior art render the Asserted Claims invalid as well.

For example, the ’448 Patent’s Background section admits in the prior art that hierarchical encoding with a base layer and enhancement layers was well known in the art at the time the application leading to the ’448 patent was filed, including citations to standards including MPEG-4 SVC. In addition, it would have been obvious to try combining the prior art references identified above because there were only a finite number of predictable solutions and/or because known work in one field of endeavor prompted variations based on predictable design incentives and/or market forces either in the same field or a different one. For example, there were only a finite number of ways to change resolution, and it would have been obvious to a POSA to try both super resolution enlargement and resolution conversion. In addition, the combination of prior art references identified above would have been obvious because the combinations represent known potential

options with a reasonable expectation of success. In particular, it was known that when a particular resolution output was desired, resolution conversion could be used to get that output. *See, e.g.*, Martins.

Fifth, additional evidence that there would have been a motivation to combine the prior art references identified in Appendix D and/or the admitted prior art, includes, for example, the interrelated teachings of multiple prior art references; the effects of demands known to the design community or present in the marketplace; the existence of a known problem for which there was an obvious solution encompassed by the Asserted Claims; the existence of a known need or problem in the field of the endeavor at the time of the invention(s); and the background knowledge that would have been possessed by a person having ordinary skill in the art. For example, prior to the alleged priority date of the Asserted Patents, it was well known that hierarchical encoding, including as disclosed in the prior art, could be used to provide base and enhancement streams at different resolutions. *See, e.g.*, Sakazume, Sung, Tom, Schulz, Stark, Martins, Segall, Sesai, Fogg 236, Nagumo 519, Schreiber, Wedi 380, Suzuki 952, Margulis 807, Ong, He, Wang, Yagasaki, Nakemura, Schwarz, Tsai, Garrido 853, Lim 000, Garrido 868, Slinger, Gu, Lim 206, Kondo, Hannuksela. A skilled artisan seeking, for example, to provide specific resolutions would have sought to use the concept of base and enhancement streams, and tailored the resolutions used during encoding to create the specific resolutions required.

Sixth, a person of ordinary skill at the time of the alleged invention had reason to combine or modify one or more of the references identified in Appendix D and/or the admitted prior art, with other prior art references in Appendix D and/or the admitted prior art, in light of the knowledge of a person of ordinary skill in the art at the time of the invention and information in the prior art cited herein. For example, the references in Appendix D and the admitted prior art all

generally relate to using super resolution enlargement when encoding and decoding video. Thus, they are all directed to features within the same field and one of ordinary skill in the art at the time of the alleged invention would have been motivated to look to these teachings in the field and combine any of these known technologies.

Seventh, many of the references in Appendix D and/or the admitted prior art, have common design features, such as hierarchical encoding. One of ordinary skill in the art would have been motivated and found it obvious to combine these references, with a reasonable expectation of success, using the standard methods for hierarchical encoding (*e.g.* use of encoders/decoders and resolution converters) to create the desired output resolutions.

In addition to the exemplary motivations, suggestions, or reasons to combine described above, Defendant identifies additional obviousness combinations and motivations to combine in the sections below. The exemplary motivations, suggestions, or reasons to combine described above and below are not exclusive or exhaustive, and should not be interpreted as indicating that any Asserted Claim is not already anticipated under 35 U.S.C. § 102. Defendant may identify further examples as the case proceeds. In addition, Defendant provides additional reasons to combine various disclosures below.

(i) "super-resolution enlargement" claim term

Independent claims 1, 2, and 3 of the '448 patent recite limitations directed to "super-resolution enlargement" (collectively, "Super-Resolution Limitations").

To the extent ACT contends that the admitted prior art or any of the references identified in Appendix D do not disclose the Super-Resolution Limitations, a person of ordinary skill in the art would have arrived at the purported invention based on the background knowledge, and/or one or more of the prior art references identified in the charts and/or attached as Exhibits.

As confirmed by the examiner during the prosecution of the ’995 patent, the Asserted Claims of the ’995 patent recite well-known components and techniques such as “the use of super-resolution processors in scalable video coding systems” (*see, e.g.*, 10/25/2016 Non-Final Rejection at 8, 14, 18, 20 (citing Ong)), “the use of resolution converters for multi-resolution encoding and decoding to enhance current and reference frames” (*see, e.g.*, 10/25/2016 Non-Final Rejection at 6, 9, 15 (citing Holcomb); 5/17/2017 Final Rejection at 4, 7, 10-11, 16 (same); 10/4/2017 Non-Final Rejection at 7, 11, 14, 20 (same); 5/23/2017 Final Rejection at 5, 9, 13, 18 (same)) and “to implement resampling of pixels” (*see, e.g.*, 5/23/2017 Final Rejection at 5, 9, 13, 18 (citing Holcomb)), “enlarging a set of decoded pictures with a second resolution higher than the standard resolution” (*see, e.g.*, 5/17/2017 Final Rejection at 5, 8, 12, 16-17 (citing Suzuki); 10/4/2017 Non-Final Rejection at 8, 11, 15, 20 (same) and “enlarging a set of decoded pictures with a second resolution higher than the standard resolution and implementing an interpolation of pixels” (*see, e.g.*, 5/23/2017 Final Rejection at 6, 10, 14, 19 (citing Barkley)). *See also, e.g.*, Sasai at Fig. 1, 2, 11A, 11B, [0002], [0010], [0014], [0015], [0023], [0026], [0089], [0129], [0149]; Wang at Fig. 17; Fogg 236 at 10:44-56, 13:10-38, 16:57-17:8, 40:22-49, 40:50-41:4; Margulis ‘994 at Fig. 4, 5, 11:40-12:15, Fogg 300 at 10, 14, 22, 23; Fogg 926 at 11; Nagumo 519 at Figs. 1-4, 8-14, 16-18, 21-22, 25, 30-32, 35-36, 39, ¶¶ [0004]-[0034], [0052]-[0053], [0110]-[0111], [0120]-[0121], [0124]-[0125], [0035], [0143]-[0144], [0149]-[0150], [0153]-[0154]; Ong at Figs. 1a-6b, pgs. 16-18; Holcomb at Figs. 2-3, 1:13-16, 3:3-12, 3:56-64, 6:8-27, 7:23-48; Barkley at [0018]-[0019], [0053]-[0056]; Suzuki at Figs. 1, 8, 11, 18, 28-34, 39, Abstract, 19:40-55, 25:27-38, 27:43-49, 37:3-38:19, 38:53-39:29, 39:59-41:18, 42:20-43:48, 10:46-49; Martins at 803-805, 806, 807, Fig. 2, 3; Park at page 21; H.263 at Fig. 1, Summary, Section 3.2, Annex U; Kramer at Abstract, page 356; Keren at Abstract, page 742; Tsai at page 318; Patti at Abstract, page 1064;

Gurturk at Abstract, page 170; Chen at Abstract, page 465; Erickson at Abstract; *see generally* Haskell, Katsaggelos, Richardson).

Indeed, the ’448 patent itself admits that super resolution enlargement was well known in the art, including citations to Sung, Tom, Schulz, and Stark. ’448 patent at 22:4-54 (conceding that “there having been many studies reported in recent years” on super-resolution conversion and that the super-resolution process of the purported invention “may for instance be an application of any such super-resolution process as described above”). Thus, it was well known in the art that super resolution enlargement can be used to enhance low resolution videos. *See, e.g.*, Nagumo 519 at Figs. 3, 4, 8-14, 16-18, 21-22, 25, 30-32, 35-36, 39, ¶¶ [0052]-[0053], [0110]-[0111], [0120]-[0121], [0124]-[0125], [0035], [0143]-[0144], [0149]-[0150], [0153]-[0154]; Wang at Fig. 15, [0083]; Jeon at Fig. 5, [0070]; Fogg 236 at Fig. 4, 29, 11:46-12:9, 39:52-58, Sasai at Fig. 1, [0093], [0117], [0129]; Holcomb at Figs. 2, 5, 6:8-27, 7:23-48, 9:14-54; Barkley at Figs. 1, 3, 5-8, [0005]; Martins Page 803-805, 806, 807, Fig. 2, 3; Park at 21; H.263 at Fig. 1, Summary, Section 3.2, Annex U; Kramer at Abstract, 356; Keren at Abstract, page 742; Tsai at page 318; Patti at Abstract, page 1064; Gurturk at Abstract, page 170; Chen at Abstract, page 465; Erickson at Abstract; *see also* Sung, Tom, Schulz, Stark, Martins, Sesai, Fogg 236, Nagumo 519, Schreiber, Wedi 380, Suzuki 952, Margulis 807, Keren.

Thus, a POSA was motivated to combine a super-resolution enlargement with any hierarchical encoding or decoding system as disclosed in, *e.g.*, Sung, Tom, Schulz, Stark, Martins, Segall, Sesai, Fogg 236, Nagumo 519, Schreiber, Wedi 380, Suzuki 952, Margulis 807, Ong, He, Wang, Yagasaki, Nakemura, Schwarz, Tsai, Garrido 853, Lim 000, Garrido 868, Slinger, Gu, Lim 206, Kondo, Hannuksela. A POSA would have had a reasonable expectation of success in combining because this concept was well known and involved nothing more than combining

[redacted]

various claimed elements known in the prior art according to known methods to yield a predictable result.

(ii) "resolution convertor" claim terms

Independent claims 1 and 2 of the '448 patent recite limitations directed to a "resolution convertor" (collectively, "Resolution Convertor Limitations").

To the extent ACT contends that the admitted prior art or any of the references identified in Appendix D do not disclose the Resolution Convertor Limitations, a person of ordinary skill in the art would have arrived at the purported invention based on the background knowledge, and/or one or more of the prior art references identified in the charts and/or attached as Exhibits.

As noted by the Examiner during prosecution of the related '995 patent, "the use of resolution converters for multi-resolution encoding and decoding to enhance current and reference frames and to implement resampling of pixels" was well known. *See, e.g.*, 10/25/2016 Non-Final Rejection at 6, 9, 15 (citing Holcomb); 5/17/2017 Final Rejection at 4, 7, 10-11, 16 (same); 10/4/2017 Non-Final Rejection at 7, 11, 14, 20 (same); 5/23/2017 Final Rejection at 5, 9, 13, 18 (same).

A POSA was motivated to combine resolution conversion with any hierarchical encoding or decoding system as disclosed in, *e.g.*, Sung, Tom, Schulz, Stark, Martins, Segall, Sesai, Fogg 236, Nagumo 519, Schreiber, Wedi 380, Suzuki 952, Margulis 807, Ong, He, Wang, Yagasaki, Nakemura, Schwarz, Tsai, Garrido 853, Lim 000, Garrido 868, Slinger, Gu, Lim 206, Kondo, Hannuksela. In particular, it was understood that resolution conversion could be used to generate any output resolution required. *See, e.g.*, Martins at Fig. 2 ("Then final step is decimation to the desired format."). Thus, a POSA was motivated to use the well-known process of resolution conversion to generate desired resolutions during the encoding and decoding process, including after super-resolution enlargement, if it would generate the desired resolution.

A POSA would have had a reasonable expectation of success in combining because this concept was well known and involved nothing more than combining various claimed elements known in the prior art according to known methods to yield a predictable result.

(iii) hierarchical coding claim terms

Independent claims 1, 2, and 3 of the ’448 patent recite limitations directed to the standard components for hierarchical encoding (*e.g.*, encoders and resolution converters) (collectively, “Hierarchical Coding Limitations”).

To the extent ACT contends that the admitted prior art or any of the references identified in Appendix D do not disclose the Hierarchical Coding Limitations, a person of ordinary skill in the art would have arrived at the purported invention based on the background knowledge, and/or one or more of the prior art references identified in the charts attached as Exhibits.

A POSA was motivated to combine the components for hierarchical encoding or decoding system as disclosed in, *e.g.*, Sakazume, Sung, Tom, Schulz, Stark, Martins, Segall, Sesai, Fogg 236, Nagumo 519, Schreiber, Wedi 380, Suzuki 952, Margulis 807, Ong, He, Wang, Yagasaki, Nakemura, Schwarz, Tsai, Garrido 853, Lim 000, Garrido 868, Slinger, Gu, Lim 206, Kondo, Hannuksela. Indeed, the ’448 patent admits that hierarchical encoding with a base layer and enhancement layers at different resolutions was well known in the art at the time the application leading to the ’448 patent was filed, including citations to standards including MPEG-4 SVC. ’448 patent at 1:64-2:34 (“there are techniques for hierarchical encoding services on moving pictures represented by among others the above-noted Patent Literature 1 and MPEG-4 SVC”). Thus, it was well known in the art at the time the application leading to the ’448 patent was filed, that the encoding of such base and enhancement layers involved resolution conversion to any desired resolutions during the process, *See*, *e.g.*, Sakazume, Sung, Tom, Schulz, Stark, Martins, Segall, Sesai, Fogg 236, Nagumo 519, Schreiber, Wedi 380, Suzuki 952, Margulis 807, Ong, He, Wang,

Yagasaki, Nakemura, Schwarz, Tsai, Garrido 853, Lim 000, Garrido 868, Slinger, Gu, Lim 206, Kondo, Hannuksela. For example, the ’448 patent itself discloses that there are standard “techniques for moving picture encoding services such as by MPEG-1, -2, and -4/AVC/SVC specified to standardize under the ISO/IEC SC29WG11.” Furthermore, the ’448 patent admits that these processes involved the “use of decoded pictures obtained by a local decoding as reference pictures for estimation of motions to create data on motion vectors, and use of data on motion vectors created by compensation of motions, to create such predictive pictures as having nearest image qualities to target pictures as encoding targets, followed by determining difference data between predictive pictures and target pictures, and implementing on the difference data a process for a prescribed encoding to attain a high efficient encoding making use of high correlations in the temporal direction.”

A POSA would have had a reasonable expectation of success in combining because the components for hierarchical encoding were well known and involved nothing more than combining various claimed elements known in the prior art according to known methods to yield a predictable result.

c) Additional Combinations

For at least the reasons described above, it would have been obvious to one of ordinary skill in the art to combine each prior art reference listed in Appendix D with any other reference or references listed in Appendix D along with the knowledge of one of ordinary skill in the art to arrive at the inventions claims in the ’448 patent.[24] For example, and without limitation, the

[24] Further, Defendant is actively searching for information regarding at least the systems, devices, and/or inventions listed above in Table 3-D. It would have been obvious to one of ordinary skill in the art to combine each of the prior art references listed in Appendix D with any of the systems identified in Table 3-D. Defendant reserves the right to supplement or amend these contentions as discovery progresses, to the extent permitted by the Court.

Asserted Claims of the '448 patent would have been obvious to one of ordinary skill in the art in view of the following combinations:

Table 4-D: Additional Combinations for the '448 Patent

Patent No. or Title (Primary Inventor/Author)	In Combination with One or More of: (Patent No. or Title (Primary Inventor/Author))
Ong	• Sung • Tom • Schulz • Stark • Martins • Segall • Sakazume • Sesai • Fogg 236 • Nagumo 519 • Schreiber • Wedi 380 • Suzuki 952 • Margulis 807 • He • Wang • Yagasaki • Nakemura • Schwarz • Tsai • Garrido 853 • Lim 000 • Garrido 868 • Slinger • Gu • Lim 206 • Kondo • Hannuksela • The knowledge of a person of ordinary skill in the art.
Sakazume	• Sung • Tom • Schulz • Stark • Martins

	• Segall • Ong • Sesai • Fogg 236 • Nagumo 519 • Schreiber • Wedi • Suzuki 952 • Margulis 807 • He • Wang • Yagasaki • Nakemura • Schwarz • Tsai • Garrido 853 • Lim 000 • Garrido 868 • Slinger • Gu • Lim 206 • Kondo • Hannuksela • H.263 • H.264 • Any system implementing H.264 can be also combined with any other system implementing H.264 in addition to the standard itself and any publications describing H.264. • The knowledge of a person of ordinary skill in the art.
Systems Implementing H.263	• Sung • Tom • Schulz • Stark • Martins • Segall • Ong • Sakazume • Sesai • Fogg 236 • Nagumo 519 • Schreiber

	• Wedi • Suzuki 952 • Margulis 807 • He • Wang • Yagasaki • Nakemura • Schwarz • Tsai • Garrido 853 • Lim 000 • Garrido 868 • Slinger • Gu • Lim 206 • Kondo • Hannuksela • H.263 • H.264 • Any system implementing H.263 can be also combined with any other system implementing H.263 in addition to the standard itself and any publications describing H.263. • The knowledge of a person of ordinary skill in the art.
Systems Implementing H.264	• Sung • Tom • Schulz • Stark • Martins • Segall • Ong • Sakazume • Sesai • Fogg 236 • Nagumo 519 • Schreiber • Wedi • Suzuki 952 • Margulis 807 • He • Wang • Yagasaki

	• Nakemura • Schwarz • Tsai • Garrido 853 • Lim 000 • Garrido 868 • Slinger • Gu • Lim 206 • Kondo • Hannuksela • H.263 • H.264 • Any system implementing H.264 can be also combined with any other system implementing H.264 in addition to the standard itself and any publications describing H.264. • The knowledge of a person of ordinary skill in the art.
Adobe Flash Player	• Sung • Tom • Schulz • Stark • Martins • Segall • Ong • Sakazume • Sesai • Fogg 236 • Nagumo 519 • Schreiber • Wedi • Suzuki 952 • Margulis 807 • He • Wang • Yagasaki • Nakemura • Schwarz • Tsai • Garrido 853 • Lim 000 • Garrido 868

	• Slinger • Gu • Lim 206 • Kondo • Hannuksela • H.263 • H.264 • Any system implementing H.264 can be also combined with any other system implementing H.264 in addition to the standard itself and any publications describing H.264. • The knowledge of a person of ordinary skill in the art.
CoreAVC	• Sung • Tom • Schulz • Stark • Martins • Segall • Ong • Sakazume • Sesai • Fogg 236 • Nagumo 519 • Schreiber • Wedi • Suzuki 952 • Margulis 807 • He • Wang • Yagasaki • Nakemura • Schwarz • Tsai • Garrido 853 • Lim 000 • Garrido 868 • Slinger • Gu • Lim 206 • Kondo • Hannuksela • H.263

	• H.264 • Any system implementing H.264 can be also combined with any other system implementing H.264 in addition to the standard itself and any publications describing H.264. • The knowledge of a person of ordinary skill in the art.
FFmpeg	• Sung • Tom • Schulz • Stark • Martins • Segall • Ong • Sakazume • Sesai • Fogg 236 • Nagumo 519 • Schreiber • Wedi • Suzuki 952 • Margulis 807 • He • Wang • Yagasaki • Nakemura • Schwarz • Tsai • Garrido 853 • Lim 000 • Garrido 868 • Slinger • Gu • Lim 206 • Kondo • Hannuksela • H.263 • H.264 • Any system implementing H.263 can be also combined with any other system implementing H.263 in addition to the standard itself and any publications describing H.263.

	• Any system implementing H.264 can be also combined with any other system implementing H.264 in addition to the standard itself and any publications describing H.264. • The knowledge of a person of ordinary skill in the art.
Helix	• Sung • Tom • Schulz • Stark • Martins • Segall • Ong • Sakazume • Sesai • Fogg 236 • Nagumo 519 • Schreiber • Wedi • Suzuki 952 • Margulis 807 • He • Wang • Yagasaki • Nakemura • Schwarz • Tsai • Garrido 853 • Lim 000 • Garrido 868 • Slinger • Gu • Lim 206 • Kondo • Hannuksela • H.263 • H.264 • Any system implementing H.263 can be also combined with any other system implementing H.263 in addition to the standard itself and any publications describing H.263.

	• Any system implementing H.264 can be also combined with any other system implementing H.264 in addition to the standard itself and any publications describing H.264. • The knowledge of a person of ordinary skill in the art.
Hz7220	• Sung • Tom • Schulz • Stark • Martins • Segall • Ong • Sakazume • Sesai • Fogg 236 • Nagumo 519 • Schreiber • Wedi • Suzuki 952 • Margulis 807 • He • Wang • Yagasaki • Nakemura • Schwarz • Tsai • Garrido 853 • Lim 000 • Garrido 868 • Slinger • Gu • Lim 206 • Kondo • Hannuksela • H.263 • H.264 • Any system implementing H.264 can be also combined with any other system implementing H.264 in addition to the standard itself and any publications describing H.264.

	• The knowledge of a person of ordinary skill in the art.
HTC	• Sung • Tom • Schulz • Stark • Martins • Segall • Ong • Sakazume • Sesai • Fogg 236 • Nagumo 519 • Schreiber • Wedi • Suzuki 952 • Margulis 807 • He • Wang • Yagasaki • Nakemura • Schwarz • Tsai • Garrido 853 • Lim 000 • Garrido 868 • Slinger • Gu • Lim 206 • Kondo • Hannuksela • H.263 • H.264 • Any system implementing H.263 can be also combined with any other system implementing H.263 in addition to the standard itself and any publications describing H.263. • Any system implementing H.264 can be also combined with any other system implementing H.264 in addition to the standard itself and any publications describing H.264.

	• The knowledge of a person of ordinary skill in the art.
HRD	• Sung • Tom • Schulz • Stark • Martins • Segall • Ong • Sakazume • Sesai • Fogg 236 • Nagumo 519 • Schreiber • Wedi • Suzuki 952 • Margulis 807 • He • Wang • Yagasaki • Nakemura • Schwarz • Tsai • Garrido 853 • Lim 000 • Garrido 868 • Slinger • Gu • Lim 206 • Kondo • Hannuksela • H.263 • H.264 • Any system implementing H.264 can be also combined with any other system implementing H.264 in addition to the standard itself and any publications describing H.264. • The knowledge of a person of ordinary skill in the art.
MSM7200	• Sung • Tom • Schulz • Stark

	• Martins • Segall • Ong • Sakazume • Sesai • Fogg 236 • Nagumo 519 • Schreiber • Wedi • Suzuki 952 • Margulis 807 • He • Wang • Yagasaki • Nakemura • Schwarz • Tsai • Garrido 853 • Lim 000 • Garrido 868 • Slinger • Gu • Lim 206 • Kondo • Hannuksela • H.263 • H.264 • Any system implementing H.263 can be also combined with any other system implementing H.263 in addition to the standard itself and any publications describing H.263. • Any system implementing H.264 can be also combined with any other system implementing H.264 in addition to the standard itself and any publications describing H.264. • The knowledge of a person of ordinary skill in the art.
Quicktime	• Sung • Tom • Schulz • Stark • Martins

	• Segall • Ong • Sakazume • Sesai • Fogg 236 • Nagumo 519 • Schreiber • Wedi • Suzuki 952 • Margulis 807 • He • Wang • Yagasaki • Nakemura • Schwarz • Tsai • Garrido 853 • Lim 000 • Garrido 868 • Slinger • Gu • Lim 206 • Kondo • Hannuksela • H.263 • H.264 • Any system implementing H.263 can be also combined with any other system implementing H.263 in addition to the standard itself and any publications describing H.263. • Any system implementing H.264 can be also combined with any other system implementing H.264 in addition to the standard itself and any publications describing H.264. • The knowledge of a person of ordinary skill in the art.
VLC Media Player	• Sung • Tom • Schulz • Stark • Martins • Segall

	• Ong • Sakazume • Sesai • Fogg 236 • Nagumo 519 • Schreiber • Wedi • Suzuki 952 • Margulis 807 • He • Wang • Yagasaki • Nakemura • Schwarz • Tsai • Garrido 853 • Lim 000 • Garrido 868 • Slinger • Gu • Lim 206 • Kondo • Hannuksela • H.263 • H.264 • Any system implementing H.263 can be also combined with any other system implementing H.263 in addition to the standard itself and any publications describing H.263. • Any system implementing H.264 can be also combined with any other system implementing H.264 in addition to the standard itself and any publications describing H.264. • The knowledge of a person of ordinary skill in the art.
x264	• Sung • Tom • Schulz • Stark • Martins • Segall • Ong

	• Sakazume • Sesai • Fogg 236 • Nagumo 519 • Schreiber • Wedi • Suzuki 952 • Margulis 807 • He • Wang • Yagasaki • Nakemura • Schwarz • Tsai • Garrido 853 • Lim 000 • Garrido 868 • Slinger • Gu • Lim 206 • Kondo • Hannuksela • H.263 • H.264 • Any system implementing H.264 can be also combined with any other system implementing H.264 in addition to the standard itself and any publications describing H.264. • The knowledge of a person of ordinary skill in the art.

d) Secondary Considerations

Additionally, Defendant notes that Plaintiff has neither provided any contention that secondary considerations of non-obviousness exist for any Asserted Patent nor provided any evidence of such secondary considerations. Defendant is not aware of any evidence supporting the existence of any such secondary considerations. This lack of evidence further renders the Asserted Claims obvious. Proving any such secondary considerations is ACT's burden. *See, e.g., ZUP, LLC v. Nach Mfg., Inc.*, 896 F.3d 1365, 1373 (Fed. Cir. 2018) ("[A] patentee bears the burden of

production with respect to evidence of secondary considerations of nonobviousness."). To date, ACT has identified no evidence of (1) commercial success of the claimed subject matter; (2) long felt but unresolved needs; (3) failure of others; (4) teaching away from the claimed subject matter by the prior art; (5) copying or acclamation by others; and (6) skepticism of experts—let alone any nexus between any alleged secondary considerations and the Asserted Claims. Defendant thus reserves the right to supplement its contentions with respect to secondary considerations once ACT has adequately identified such secondary considerations and/or their alleged nexus to the Asserted Claims.

"The fact of near-simultaneous invention, though not determinative of statutory obviousness, is strong evidence of what constitutes the level of ordinary skill in the art." *Ecolochem, Inc. v. S. Cal. Edison Co.*, 227 F.3d 1361, 1379 (Fed. Cir. 2000) (citing *The Int'l Glass Co. v. United States*, 187 Ct. Cl. 376, 408 F.2d 395, 405 (1969)). "[T]he possibility of near simultaneous invention by two or more equally talented inventors working independently, . . . may [] be an indication of obviousness when considered in light of all the circumstances." *Id.* (citing *Lindeman Maschinenfabrik GmbH v. American Hoist & Derrick Co.*, 730 F.2d 1452, 1460 (Fed. Cir. 1984)); *see also George M. Martin Co. v. Alliance Mach. Sys. Int'l LLC*, 618 F.3d 1284, 1305 (Fed. Cir. 2010) ("Independently made, simultaneous inventions, made within a comparatively short space of time, are persuasive evidence that the claimed apparatus was the product only of ordinary mechanical or engineering skill."). To the extent that any of the references in these preliminary invalidity contentions is found not to be prior art to the respective Asserted Patents, these references may be relied upon as evidence of near-simultaneous invention favoring obviousness.

To the extent ACT is permitted to introduce contentions and/or evidence concerning secondary considerations in the future, Defendant reserved all rights to rebut those contentions if and when ACT identifies them. In the meantime, Defendant notes the complete lack of any such evidence in the record. Moreover, Defendant further contends that, in any event, the evidence of obviousness for each asserted claim is so overwhelming that secondary considerations are necessarily insufficient to rebut Defendant's showing. *See, e.g.*, *Ohio Willow Wood Co. v. Alps South, LLC*, 735 F.3d 1333, 1344 (Fed. Cir. 2013) ("[W]here a claimed invention represents no more than the predictable use of prior art elements according to established functions, as here, evidence of secondary indicia are frequently deemed inadequate to establish non-obviousness.").

6. 35 U.S.C. § 112 Invalidity Under P.R. 3–3(d)

Pursuant to P.R. 3–3(d), Defendant contends that the Asserted Claims of the '448 patent are invalid under 35 U.S.C. § 112 because the claims are indefinite, not enabled, or lack written description. Defendant's contentions that the following claims are invalid under 35 U.S.C. § 112 are made in the alternative and do not constitute, and should not be interpreted as, admissions regarding the construction or scope of the claims of the '448 patent, or that any of the claims of the '448 patent are not anticipated or rendered obvious by prior art. The following contentions, made pursuant to P.R. 3–3(d), are subject to revision and amendment pursuant to P.R. 3–6 and Federal Rule of Civil Procedure 26(e) and the Orders of record in this matter to the extent appropriate, *e.g.*, in light of further investigation and discovery regarding the defenses, the Court's construction of the claims at issue, and/or review and analysis of expert witnesses. Defendant offers these contentions in response to ACT's Infringement Contentions and without prejudice to any position it may ultimately take as to any claim construction issues.

a) Indefiniteness under 35 U.S.C. § 112, Second Paragraph

35 U.S.C. § 112 includes a definiteness requirement. *See* 35 U.S.C. § 112, ¶ 2 ("[T]he specification shall conclude with one or more claims particularly pointing out and distinctly claiming the subject matter which the applicant regards as his invention."). "[A] patent is invalid for indefiniteness if its claims, read in light of the specification delineating the patent, and the prosecution history, fail to inform, with reasonable certainty, those skilled in the art about the scope of the invention." *Nautilus, Inc. v. Biosig Instruments, Inc.*, 134 S. Ct. 2120, 2124 (2014).

The Asserted Claims are invalid as indefinite under 35 U.S.C. § 112, second paragraph, for failing to particularly point out and distinctly claim the subject matter which the applicants regard as their invention. The specification of the '448 patent provides no objective standard by which one of ordinary skill in the art could determine the meaning of the asserted claim elements. In particular, at least the following claim terms are indefinite because they fail to particularly point out and distinctly claim the subject matter which the applicants regarded as their alleged inventions.[25]

For example, Claims 1, 2, and 3 are invalid for indefiniteness as to the phrase "a first combination of processes for an encoding and a decoding" because this term when read in light of the specification delineating the patent and the prosecution history, fail to inform, with reasonable certainty, those skilled in the art about the scope of the invention. For example, the limitation fails to inform a person of ordinary skill what processes or combination of processes would satisfy the claims.

The following limitations recited in the '448 patent Asserted Claims are indefinite in whole, in part or in combination, as summarized below:[26]

---

[25] Dependent claims are also invalid as being dependent upon a base claim that is indefinite under 35 U.S.C. § 112, second paragraph.

[26] Listed claims also include all Asserted Claims dependent thereon, even if those claims are not individually listed.

Table 5-D: Indefinite Terms under 35 U.S.C. § 112(2) the '448 Patent

Term	Relevant Claim(s)
a first encoder configured to work on a sequence of moving pictures with a standard resolution to implement a first combination of processes for an encoding and a decoding to create a first sequence of encoded bits and a set of decoded pictures with the standard resolution;	1, 2, 3
a first super-resolution enlarger configured to work on the sequence of moving pictures with the standard resolution to implement a process for a first super-resolution enlargement to create a set of super-resolution enlarged pictures with a resolution higher than the standard resolution;	1, 2, 3
a second super-resolution enlarger configured to acquire the set of decoded pictures from the first encoder to implement thereon a process for a second super-resolution enlargement to create a set of super-resolution enlarged decoded pictures with a resolution higher than the standard resolution;	1, 2, 3
a third resolution converter configured to acquire the set of decoded pictures from the first encoder to implement thereon a process for a third resolution conversion to create a set of resolution converted enlarged decoded pictures with a resolution higher than the standard resolution;	1, 2
a third encoder configured to have the set of super-resolution enlarged pictures from the first super-resolution enlarger as a set of encoding target pictures, employing the set of super-resolution enlarged decoded pictures from the second super-resolution enlarger and the set of resolution converted enlarged decoded pictures from the third resolution converter as sets of reference pictures, to implement thereon a third combination of processes for a prediction and an encoding to create a third sequence of encoded bits,	1
wherein a spatial resolution of the set of super-resolution enlarged pictures, that of the	1

set of super-resolution enlarged decoded pictures, and that of the set of resolution converted enlarged decoded pictures are made equal;	
wherein the third encoder controls a selection of a set of reference pictures and creates a set of data on the selection of the set of reference pictures to identify a selected set of reference pictures during the process for prediction of the third combination.	1, 2, 3
a third encoder configured to have the set of super-resolution enlarged pictures from the first super-resolution enlarger as a set of encoding target pictures, employing the set of resolution converted enlarged decoded pictures from the third resolution converter as a set of reference pictures, to implement thereon a third combination of processes for a prediction and an encoding to create a third sequence of encoded bits,	2
wherein a spatial resolution of the set of super-resolution enlarged pictures, and that of the set of resolution converted enlarged decoded pictures are made equal;	2
a third encoder configured to have the set of super-resolution enlarged pictures from the first super-resolution enlarger as a set of encoding target pictures, employing the set of super-resolution enlarged decoded pictures from the second super-resolution enlarger as a set of reference pictures, to implement thereon a third combination of processes for a prediction and an encoding to create a third sequence of encoded bits,	3
wherein a spatial resolution of the set of super-resolution enlarged pictures, and that of the set of super-resolution enlarged decoded pictures are made equal;	3
standard resolution	1, 2, 3
a first combination of processes for an encoding and a decoding	1, 2, 3

b) Lack of Enablement and/or Lack of Written Description

35 U.S.C. § 112, paragraph 1, includes an enablement requirement. *See* 35 U.S.C. § 112, ¶ 1 ("The specification shall contain a written description . . . of the manner and process of making and using [the invention] in such full, clear, concise and exact terms as to enable any person skilled in the art to which it pertains, or with which it is most nearly connected, to make and use the same.").

To satisfy the enablement requirement of 35 U.S.C. § 112, paragraph 1, the disclosure "must teach those skilled in the art how to make and use the full scope of the claimed invention without 'undue experimentation.'" *Genentech, Inc. v. Novo Nordisk, A/S*, 108 F.3d 1361, 1365 (Fed. Cir. 1997) (citations omitted). Moreover, "[i]t is the specification, not the knowledge of one skilled in the art, that must supply the novel aspects of [the] invention in order to constitute adequate enablement." *Genentech*, 108 F.3d at 1366. The Federal Circuit has enumerated several factors to consider in determining whether a disclosure would require "undue experimentation": (1) the quantity of experimentation necessary; (2) the amount of direction or guidance presented; (3) the presence or absence of working examples; (4) the nature of the invention; (5) the state of the prior art; (6) the relative skill of those in the art; (7) the predictability or unpredictability of the art; and (8) the breadth of the claims. *In re Wands*, 858 F.2d 731, 737 (Fed. Cir. 1988).

To satisfy the written description requirement, the description must "clearly allow persons of ordinary skill in the art to recognize that [the inventor] invented what is claimed." *Ariad Pharmaceuticals, Inc. v. Eli Lilly and Co.*, 598 F.3d 1336, 1351 (Fed. Cir. 2010) (internal citation omitted). In other words, the test for sufficiency is whether the disclosure of the application relied upon reasonably conveys to those skilled in the art that the inventor had possession of the claimed subject matter as of the filing date. *Id.* The test requires an objective inquiry into the four corners of the specification from the perspective of a person of ordinary skill in the art. Based on that

inquiry, the specification must describe an invention understandable to that skilled artisan and show that the inventor actually invented the invention claimed. "Whether the written description requirement is satisfied is a fact-based inquiry that will depend on the nature of the claimed invention, and the knowledge of one skilled in the art at the time an invention is made and a patent application is filed." *Carnegie Mellon Univ. v. Hoffmann La Roche Inc.*, 541 F.3d 1115, 1122 (Fed. Cir. 2008). Actual "possession" or reduction to practice outside of the specification is not enough. Rather, as stated above, it is the specification itself that must demonstrate possession. A description that merely renders the invention obvious does not satisfy the requirement. *Lockwood v. Am. Airlines*, 107 F.3d 1565, 1571-72 (Fed. Cir. 1997).

All Asserted Claims of the '448 patent are invalid for lack of enablement and/or lack written description because they do not contain an enabling or sufficient disclosure of the specific hardware structure, reference software, source code, and/or other specific details of the invention that would enable a person skilled in the art to practice the claimed invention without undue experimentation.[7]

For example, Claims 1, 2, and 3 fail to satisfy the requirements of 35 U.S.C. § 112(1) because the specification fails to provide an enabling disclosure of "a first combination of processes for an encoding and a decoding." Therefore, the specification fails to provide a written description of using the of "a first combination of processes for an encoding and a decoding" as recited in the above-listed claims or teach a person of ordinary skill how to make or use the same. Further, a POSA would not understand the specification to enable every possible method of encoding and decoding, yet the claims purport to cover all possible methods.

The following limitations recited in the '448 Patent Asserted Claims are indefinite in whole, in part or in combination, as summarized below:[27]

Table 6-D: Indefinite Terms under 35 U.S.C. § 112(1) for the '448 Patent

Term	Relevant Claim(s)
a first encoder configured to work on a sequence of moving pictures with a standard resolution to implement a first combination of processes for an encoding and a decoding to create a first sequence of encoded bits and a set of decoded pictures with the standard resolution;	1, 2, 3
a first super-resolution enlarger configured to work on the sequence of moving pictures with the standard resolution to implement a process for a first super-resolution enlargement to create a set of super-resolution enlarged pictures with a resolution higher than the standard resolution;	1, 2, 3
a second super-resolution enlarger configured to acquire the set of decoded pictures from the first encoder to implement thereon a process for a second super-resolution enlargement to create a set of super-resolution enlarged decoded pictures with a resolution higher than the standard resolution;	1, 2, 3
a third resolution converter configured to acquire the set of decoded pictures from the first encoder to implement thereon a process for a third resolution conversion to create a set of resolution converted enlarged decoded pictures with a resolution higher than the standard resolution;	1, 2
a third encoder configured to have the set of super-resolution enlarged pictures from the first super-resolution enlarger as a set of encoding target pictures, employing the set of super-resolution enlarged decoded pictures from the second super-resolution enlarger and the set of resolution converted enlarged decoded pictures from the third resolution	1

[27] Listed claims also include all Asserted Claims dependent thereon, even if those claims are not individually listed.

converter as sets of reference pictures, to implement thereon a third combination of processes for a prediction and an encoding to create a third sequence of encoded bits,	
wherein a spatial resolution of the set of super-resolution enlarged pictures, that of the set of super-resolution enlarged decoded pictures, and that of the set of resolution converted enlarged decoded pictures are made equal;	1
wherein the third encoder controls a selection of a set of reference pictures and creates a set of data on the selection of the set of reference pictures to identify a selected set of reference pictures during the process for prediction of the third combination.	1, 2, 3
a third encoder configured to have the set of super-resolution enlarged pictures from the first super-resolution enlarger as a set of encoding target pictures, employing the set of resolution converted enlarged decoded pictures from the third resolution converter as a set of reference pictures, to implement thereon a third combination of processes for a prediction and an encoding to create a third sequence of encoded bits,	2
wherein a spatial resolution of the set of super-resolution enlarged pictures, and that of the set of resolution converted enlarged decoded pictures are made equal;	2
a third encoder configured to have the set of super-resolution enlarged pictures from the first super-resolution enlarger as a set of encoding target pictures, employing the set of super-resolution enlarged decoded pictures from the second super-resolution enlarger as a set of reference pictures, to implement thereon a third combination of processes for a prediction and an encoding to create a third sequence of encoded bits,	3
wherein a spatial resolution of the set of super-resolution enlarged pictures, and that of the set of super-resolution enlarged decoded pictures are made equal;	3
standard resolution	1, 2, 3

a first combination of processes for an encoding and a decoding	1, 2, 3

E. U.S. Patent No. 8,230,101

1. Alleged Priority Date

A "patent may only claim priority to an earlier application if the earlier application fulfills the requirements of § 112, first paragraph, which requires, in part, that the application 'shall contain a written description of the invention, and of the manner and process of making and using it, in such full, clear, concise, and exact terms as to enable any person skilled in the art to which it pertains, or with which it is most nearly connected, to make and use the same.'" *Chiron Corp. v. Genentech, Inc.*, 363 F.3d 1247, 1253 (Fed. Cir. 2004). ACT has failed to establish that any Asserted Claim is entitled to a priority date based on the filing of any earlier application. Defendant reserves its right to identify additional bases for this contention in response to ACT's subsequent arguments and positions, any amendments that ACT makes to its own contentions, the Court's claim construction, or information uncovered during further discovery.

ACT alleges that the earliest possible priority date for the Asserted Claims of the '101 patent is the priority date of the '101 patent's earliest application, U.S. Patent Application No. 12/525,777, which has a filing date of March 2, 2007. *See* Infringement Contentions at 8. ACT provides no contention nor any evidence in its infringement contentions demonstrating that the '101 patent was invented earlier than the effective filing date of its earliest application. Thus, the '101 patent is not entitled to any date of invention earlier than the effective filing date of its earliest application, which ACT alleges is March 2, 2007. Defendant's disclosure of prior art is premised on the alleged priority date as identified in Plaintiff's Infringement Contentions. Defendant contends Plaintiff is not entitled to the alleged priority date and reserves the right to modify, amend, or supplement its invalidity contentions with additional prior art references if any Asserted Claim

is shown to not be entitled to the respective alleged priority date. Defendant objects to ACT alleging or providing evidence of any earlier date of invention; all such evidence is fully within ACT's control and to the extent ACT claims an earlier priority date, it needed to do so in its infringement contentions. To the extent ACT is able and permitted to assert an earlier date of invention for any of the Asserted Patents, Defendant may modify, amend, and/or supplement these Invalidity Contentions, including, but not limited to its identification and production of additional prior art.

2. General State of the Art at the Time of the Alleged Invention

The claimed invention of the '101 patent is directed to a server device for media that optimizes digital content storage and playback across internal and network storage while ensuring smooth media playback. '101 patent at 1:7-12. The claimed invention allows for digital contents to be shared and played across different network players, with the same digital contents stored across the internal storage and network storage (for example, when the internal storage gets full).

The prior art identified below (including the "References Cited" on the face of the '101 patent) may provide background and context pertinent to the teachings, and interpretation of, the prior art referenced by the claim charts.

For example, the '101 patent admits that networked media services for managing media content over a network was well known in the art at the time the application leading to the '101 patent was filed. For example, the '101 patent also specifically discusses Digital Living Network Alliance ("DLNA") in the "Background Art" section of the patent, specifically explaining how the home network server device is set up to store, share, and play digital contents to various network players in the home network. '101 patent at 1:16-35. As stated in the DLNA, Use Case Scenarios White Paper, June 2004, the "DLNA Vision" integrates "the Internet, mobile and broadcast islands . . . through a seamless, interoperable network." DLNA, Use Case Scenarios White Paper, June

2004 at 3. "In this vision, a digital home contains a wide variety of devices that can store, access and play different forms of digital media with device control intelligence distributed throughout the home network. Sophisticated control applications orchestrate the behavior of network devices. For example, an intelligent platform such as a PC, advanced set-top box, digital TV, or networked control pad can manage and distribute rich digital content from devices such as digital video recorders (DVRs), network DVD players and multimedia mobile phones to devices such as TVs, stereos, or wireless speakers and monitors." *Id.* Also, as stated in the DLNA Overview and Vision Whitepaper, 2006, "In the DLNA digital home, it will be common for consumers to:

- Easily acquire, store and access digital music from almost anywhere in the home
- Effortlessly manage, view, print and share digital photos
- Take favorite content anywhere to share with family and friends
- Enjoy distributed, multi-user content recording and playback"

DLNA Overview and Vision Whitepaper, 2006, at 1. Further, DLNA incorporates several existing public standards, including Universal Plug and Play (UPnP), with numerous UPnP AV clients operating under the DLNA standard already available at the time of the '101 priority date.

Moreover, the general processes of offloading digital contents/media from internal storage to network storage, for example, when the internal storage was full, was already well known in the art, as shown in Sloss. The general process of having a list that delineated where the data was stored (internal storage or network storage) was also well known in the art, as shown in Lamkin. The general process of having a search unit that can find where the data is stored was also well known in the art, as shown in Sloss, Lamkin, Roden, and Ko. The general process of being able to transfer data from between internal storage of the server device, network storage, and the network player was well known in the art, as shown in Sloss, Roden, and Ito.

In addition to the prior art admitted by the '101 patent, the references that anticipate and/or render obvious one or more Asserted Claims are identified in the claim charts of Exhibits E01-E26 (collectively, "Appendix E") and in Section III.E.3, *infra*.

3. Disclosure of Prior Art References (P.R. 3-3(a))

Pursuant to P.R. 3-3(a), Defendant identifies at least the following prior art now known to it to anticipate and/or render obvious one or more of the Asserted Claims of the '101 patent, either expressly, implicitly, or inherently as understood by a person having ordinary skill in the art.

a) Prior Art Patents, Patent Applications, And Publications

In addition to the prior art admitted by the '101 patent, the following patents, patent applications, and publications are prior art to the '101 patent under at least 35 U.S.C. §§ 102(a), (b), (e), and/or (g), and anticipate and/or render obvious the Asserted Claims of the '101 patent:

Table 1-E: Prior Art Patents and Patent Applications for the '101 Patent

Patent or Patent Application No.	Country of Origin	Date of Issue (if Issued Patent)	Exhibit[28]	Anticipates	Renders Obvious
WO 01/76192 to Sloss, "Distributed Edge Network Architecture" ("Sloss")	United States	Pub. Oct. 11, 2001	E01		X
U.S. Pub. No. 2006/0161635 to Lamkin, "Methods and System for Use in Network Management of Content" ("Lamkin")	United States	Pub. Jul. 20, 2006	E02		X
U.S. Pub. No. 2006/0110137 to Tsuda, "Video and Audio Data Transmitting Apparatus, and Video and Audio	United States	Pub. May 25, 2006	E03		X

[28] Exhibit numbers have only been listed for primary references. Additional prior art references that disclose and render obvious certain elements are described in Sections III.E.4-.5 *infra*, as well as the discussion of the general state of the art in Section III.E.2, *supra*.

Data Transmitting Method" ("Tsuda")					
U.S. Pub. No. 2006/0101489 to Roden, "Methods, Systems, and Storage Mediums for Managing Content Storage and Selection" ("Roden")	United States	Pub. May 11, 2006	E04		X
WO 2006/073040 to Ito, "Backup System, Recording/Reproduction Device, Backup Device, Backup Method, Program, and Integrated Circuit" ("Ito")	Japan	Pub. July 13, 2006	E26		X

Table 2-E: Prior Art Publications for the '101 Patent

Title	Date of Publication	Author/ Publisher	Exhibit[29]	Anticipates	Renders Obvious
"Streaming Media in the Classroom – An overview of the current use of streaming technologies and the opportunities they afford in meeting educational needs particularly in Europe" ("Bijnens")	January 2004	Helena Bijnens, Mathijs Bijens, Mathy Vanbuel	E05		X
Network and Grid Support for Multimedia Processing,	February 2004	Petr Holub	E06		X

[29] Exhibit numbers have only been listed for primary references. Additional prior art references that disclose and render obvious certain elements are described in Sections III.E.4-.5 *infra*, as well as the discussion of the general state of the art in Section III.E.2, *supra*.

PhD Thesis Proposal ("Holub")					
Online File Storage System ("Rou")	February 2002	The Kai Rou, Khalid Suliman Al-Tahat, Zainuddin Bin Hassan	E07		X
mProducer: Authoring Multimedia Personal Experiences on Mobile Phones ("Teng")	February 22, 2005	Chao-Ming Teng, Hao-hua Chu, Chon-In Wu	E08		X
Digital Living Network Alliance ("2006 DLNA Standards")	2006	DLNA	E09		X
Use Case Scenarios – Whitepaper ("2004 DLNA Whitepaper")	June 2004	DLNA	E10		X
DLNA Overview and Vision Whitepaper ("2006 DLNA Whitepaper")	2006	DLNA	E11		X

b) Prior Art Systems

Numerous systems are prior art to the '101 patent under at least 35 U.S.C. §§ 102(a), (b), (e), and/or (g), and anticipate and/or render obvious the Asserted Claims of the '101 patent. These systems also include physical implementations of prior art patents, patent applications, and publications identified herein that were known, made, used, sold, offered for sale, or imported into

this country prior to the effective filing dates of the ’101 patent, including those identified above and discussed in the sections below. Defendant’s reference to a particular product, device, or software program in these contentions should be interpreted as a reference to the system itself as well as to any corresponding patents, publications, or product literature relating to the cited system. Although Defendant’s investigation continues, information available to date indicates that numerous systems, including the ’101 Prior Art Systems cited in Appendix E, were (1) known or used in this country before the alleged invention of the claimed subject matter of the Asserted Claims, (2) in public use and/or on sale in this country more than one year before the priority dates of the ’101 patent, and/or (3) invented by another who did not abandon, suppress, or conceal, before the alleged invention of the claimed subject matter of the Asserted Claims.

In addition Defendant may rely on systems or other embodiments of the subject matter described in each of the references described above. Each of the references cited in support of the above systems may also be prior art individually under 35 U.S.C. §§ 102(a), (b), (e), and/or (g).

The claimed server device for media, method for controlling a server for method, and computer program of the independent and dependent claims of the ’101 patent are “capable of maintaining the convenience of playback in a network player, while properly dealing with the large total size of held digital contents.” ’101 patent at 2:6-11. The claimed invention of the ’101 patent allows a user to play media from a network player as if all the digital contents were left in the internal storage device of the server device, while in reality, part of the digital contents has been transferred from the internal storage device to the network storage device. ’101 patent at 3:13-23. The ’101 patent also specifically discusses Digital Living Network Alliance (“DLNA”) in the “Background Art” section of the patent, specifically explaining how the home network server device is set up to store, share, and play digital contents to various network players in the home

network. '101 patent at 1:16-35. DLNA is a "set of interoperability standards for sharing home digital media among multimedia devices. It allows users to share or stream stored media files to various certified devices on the same network like PCs, smartphones, TV sets, game consoles, stereo systems, and NASs. DLNA incorporates several existing public standards, including Universal Plug and Play (UPnP) for media management and device discovery and control, wired and wireless networking standards, and widely used digital media formats." https://en.wikipedia.org/wiki/DLNA. At the time of the '101 priority date, there were already numerous UPnP AV clients operating under the DLNA standard, making them prior art systems for the '101 patent, upon information and belief, including, but not limited to, the systems listed in Table 3-E.

As discovery is ongoing, Defendant continues to investigate these items and may amend or supplement these contentions to include additional information or documents regarding such products and/or systems. Defendant may rely on the individual references within each system, either alone or in combination, as prior art separate and apart from their description for the system. Each of the individual references within each system qualifies as prior art to the '101 patent under at least 35 U.S.C. §§ 102 and/or 103 (pre-AIA). The Asserted Claims of the '101 patent are anticipated by the individual references expressly and/or inherently or rendered obvious, either alone or in combination with other references, as set forth in the Defendant's system art charts identified below. It would have been obvious for a person of ordinary skill to combine these individual references since they are related to the '101 patent and prior art systems at the time of invention.

Table 3-E: Prior Art Systems and Inventions for the '101 Patent

Name of System or Invention	Date of Sale/ Offer for Sale / Public Use /	Exhibit	Anticipates	Renders Obvious

	Known by Others			
Prior Art Systems Implementing DLNA Standards	2006	E12		X
PlayStation 3/PS3 Media Server System	2006	E13		X
Xbox 360 System	2006	E14		X
Pioneer BDP-HD1 System	2006	E15		X
Plex System	2006	E16		X
Nokia N95 System	2006	E17		X
Nokia N80 System	2006	E18		X
Archos Video Player System	2006	E19		X
Nero MediaHome System	2006	E20		X
WinDVD System	2005	E21		X
Windows Media Player System	6/24/2005	E22		X
VLC Media Player System	2001	E23		X
Winamp System	1997	E24		X
iTunes System	2001	E25		X

4. Anticipation and Obviousness Under P.R. 3-3(b) and (c)

35 U.S.C. § 102(a) provides that "[a] person shall be entitled to a patent unless . . . the invention was known or used by others in this country, or patented or described in a printed publication in this or a foreign country, before the invention thereof by the applicant for patent . . . ." To be anticipatory, a reference must describe, either expressly or inherently, each and every limitation and enable one of skill in the art to practice an embodiment of the claimed invention without undue experimentation. *Stored Value Solutions, Inc. v. Card Activation Technologies, Inc.*, 2012 WL 6097674, at *8 (Fed. Cir. 2012). A reference may anticipate inherently if a claim limitation that is not expressly disclosed "is necessarily present, or inherent, in the single anticipating reference." *In re Aoyama*, 656 F.3d 1293, 1337 (Fed. Cir. 2011) (quoting *Schering Corp. v. Geneva Pharm., Inc.*, 339 F.3d 1373, 1377 (Fed. Cir. 2003)); *Akamai Technologies, Inc.*

v. Cable & Wireless Internet Services, Inc., 344 F.3d 1186, 1195 (Fed. Cir. 2003) (finding hierarchical DNS servers inherent in any Internet system).

Each of the Asserted Claims of the ’101 patent is anticipated and/or rendered obvious by prior art. Pursuant to P.R. 3–3(b), Defendant identifies the prior art references that anticipate or render obvious an Asserted Claim in the claim charts of Appendix E, which are hereby incorporated by reference as if fully set forth herein, and in Section III.E.3.

Pursuant to P.R. 3-3(c), the claim charts of Appendix E, provide an identification where these prior art references teach or suggest each and every element of the Asserted Claims of the ’101 patent. For each reference or combination of references suggested by each chart, Defendant indicates whether the prior art renders the claim anticipated and/or obvious pursuant to P.R. 3–3(b). In addition to contending that the Asserted Claims are invalid in view of the prior art references cited in the claim charts of Appendix E and admitted prior art, Defendant further contend that the Asserted Claims are invalid as anticipated and/or obvious under U.S.C. §§ 102(a) and/or (b) in view of public knowledge and uses and/or offers for sale of products and services related to the subject matter of the cited references. Reference to a particular circuitry, software program, device or product in the claim charts of Appendix E should be interpreted as a reference to the product itself and any corresponding patents, publications, or product literature cited in Appendix E that relates to the cited circuitry, software program, device, or product. In addition, Defendant may rely on other documents or things that have not yet been located to support its contentions regarding such prior art circuit(s), software program(s), device(s) or product(s) that are referenced in the charts.

Defendant incorporates by reference, as if set forth fully herein, all prior art cited during the prosecution of the ’101 patent. In addition, Defendant identifies and hereby incorporates by

reference as if set forth fully herein the prior art references that anticipate or render obvious an asserted claim as described in a future reexaminations or *inter partes* reviews of the ’101 patent, if any, that a requestor may file or the PTO may grant.

Defendant further identifies and hereby incorporates by reference as if set forth fully herein the prior art references and invalidity contentions as described in any other lawsuits wherein invalidity contentions have been, or will be, provided regarding the ’101 patent, any foreign counterparts, or any parent or child patent of the ’101 patent. *Advanced Coding Techs. v. LG Elecs.*, No. 2:22-cv-00501-JRG (E.D. Tex. July 18, 2024), D.I. No. 148-3 (Ex. B Samsung’s May 30, 2024 Amended Invalidity and Subject Matter Eligibility Contentions); *Advanced Coding Techs. v. Apple, Inc.*, No. 2:22-cv-00572-JRG (E.D. Tex.), D.I. 42 (Third Amended Docket Control Order).

Defendant may use any and all portions of the publication, related publications, commercial embodiments of the publication, and other evidence that is discovered in these lawsuits to demonstrate and/or evidence the components, functionality, and capabilities of the devices and systems disclosed in the references charted.

Where Defendant identifies a particular figure in a prior art reference, the identification should be understood to encompass the caption and description of the figure, as well as any text relating to the figure in addition to the figure itself. Similarly, where an identified portion of text refers to a figure or other material, the identification should be understood to include the referenced figure or other material as well. It should be recognized that a person of ordinary skill in the art would generally read a prior art reference as a whole and in the context of other publications, literature, and general knowledge in the field. To understand and interpret any specific statement or disclosure in a prior art reference, a person of ordinary skill in the art would rely upon other information including other publications and general scientific or engineering knowledge.

Defendant therefore may rely upon other unidentified portions of the prior art references and on other publications and expert testimony to provide context and to aid understanding and interpretation of the identified portions.

Defendant may also rely upon other portions of the prior art references, other publications, and the testimony of experts to establish that the alleged inventions would have been obvious to a person of ordinary skill in the art, including the basis of modifying or combining certain cited references. To the extent any limitation is deemed not to be met by an item of prior art, then any purported differences are such that the claimed subject matter as a whole would have been obvious to one skilled in the art at the time of the alleged invention, in view of the state of the art and knowledge of those skilled in the art. To the extent that an element of an Asserted Claim is not anticipated, the claim is rendered obvious by combination with one or more other prior art references identified in Appendix E and the admitted prior art.

5. Obviousness Under P.R. 3-3(b) and (c)

a) Prior Art Rendering Asserted Claims Obvious

In general, a claimed invention is unpatentable under 35 U.S.C. § 103(a) if "the differences between the subject matter sought to be patented and the prior art are such that the subject matter as a whole would have been obvious at the time the invention was made to a person having ordinary skill in the art." 35 U.S.C. § 103(a); *Graham v. John Deere Co.*, 383 U.S. 1, 13-14 (1966). The ultimate determination of whether an invention is or is not obvious is a legal conclusion based on underlying factual inquiries including: "(1) the scope and content of the prior art; (2) the level of ordinary skill in the art; (3) the differences between the claimed invention and the prior art; and (4) objective evidence of nonobviousness." *Miles Labs., Inc. v. Shandon, Inc.*, 997 F.2d 870, 877 (Fed. Cir. 1993). *See also Graham*, 383 U.S. at 17-18.

A claimed invention is obvious when a skilled artisan would have been motivated to combine the teaching of the prior art references to achieve the claimed invention, and the skilled artesian would have had a reasonable expectation of success in doing so. *See, e.g., Unigene Labs., Inc. v. Apotex, Inc.*, 655 F.3d 1352, 1360 (Fed. Cir. 2011). "Any need or problem known in the field of endeavor at the time of the invention and addressed by the patent can provide a reason for combining the elements in the manner claimed." *See KSR Int'l Co. v. Teleflex Inc.*, 550 U.S. 398, 420 (2007). While an analysis of any teaching, suggestion, or motivation to combine elements from different prior art references is useful in an obviousness analysis, such analyses should not be rigidly applied; the overall inquiry must be expansive and flexible, and must include the common sense and ordinary creativity of a person having ordinary skill in the art as part of the analysis. *Id.* at 419-21.

Pursuant to P.R. 3–3(b), Defendant identifies in Appendix E and in the sections below the prior art references that render obvious under 35 U.S.C. §103(a) the Asserted Claims of the '101 patent and include an identification of combinations showing the obviousness of the Asserted Claims in view of the prior art. Moreover, to the extent ACT contends that an element is not disclosed in any one of the references identified in Appendix E, such reference may be combined with one or more of the other references identified in Appendix E and/or the admitted prior art for such element, thereby rendering the claim invalid as obvious. Defendant may combine any prior art reference identified for the '101 patent with any other prior art reference identified for the '101 patent to assert obviousness. Even if a prior art reference does not expressly disclose all limitations as arranged or combined in the same manner as an asserted claim, a skilled artisan reading the reference would at once envisage the claimed arrangement or combination. *See, e.g., Kennametal Inc. v. Ingersoll Cutting Tool Co.*, 780 F.3d 1376 (Fed. Cir. 2015).

To the extent a finder of fact determines that a limitation of any of the Asserted Claims of the ’101 patent is not disclosed by one of the references or products and systems identified above pursuant to P.R. 3–3(a), the claims are nevertheless unpatentable as obvious because they contain nothing that constitutes patentable innovation. To the extent a finder of fact determines that a limitation of any of the Asserted Claims of the ’101 patent is not anticipated, no asserted claim goes beyond combining familiar elements according to known methods to achieve predictable results or does more than choose between clear alternatives known to those of ordinary skill in the art.

b) Teaching, Suggestion, or Motivation to Combine References

The U.S. Supreme Court decision in *KSR International Co. v. Teleflex Inc.*, 127 S. Ct. 1727, 1739 (2007) (“ *KSR*”) held that a claimed invention can be obvious even if there is no explicit, written teaching, suggestion, or motivation for combining the prior art to produce that invention. Accordingly, no showing of a specific motivation to combine prior art is required to combine the references disclosed in the attached charts, as each combination of art would have no unexpected results, and, at most, would simply represent a known alternative to one of ordinary skill in the art. *See KSR*, 127 S. Ct. at 1739-40 (rejecting the Federal Circuit’s “rigid” application of the teaching, suggestion, or motivation to combine test, and instead espousing an “expansive and flexible” approach). A person of ordinary skill in the art is “a person of ordinary creativity, not an automaton” and “in many cases a person of ordinary skill in the art will be able to fit the teachings of multiple patents together like pieces of a puzzle.” *Id.* at 1742. “In determining whether the subject matter of a patent claim is obvious, neither the particular motivation nor the avowed purpose of the patentee controls. What matters is the objective reach of the claim.” *Id.* at 1741-42. “Under the correct analysis, any need or problem known in the field of endeavor at the time of invention and addressed by the patent can provide a reason for combining the elements in the

manner claimed." *Id.* at 1742. In particular, the Supreme Court emphasized the principle that "[t]he combination of familiar elements according to known methods is likely to be obvious when it does no more than yield predictable results." *Id.* at 1739. A key inquiry is whether the "improvement is more than the predictable use of prior art elements according to their established functions." *Id.* at 1740.

"Additionally, 'universal' motivations known in a particular field to improve technology provide 'a motivation to combine prior art references *even absent any hint of suggestion* in the references themselves.'" *Intel Corp. v. PACT XPP Schweiz AG*, 61 F.4th 1373, 1379 (Fed. Cir. 2023) (quoting *Intel Corp. v. Qualcomm Inc.*, 21 F.4th 784, 797-99 (Fed. Cir. 2021)) (original emphasis). Thus, motivations to combine, as well as the general state of the art, may be found in a variety of places including, but not limited to, in the references defined above, and the specification of the Asserted Patents.

The rationale to combine or modify prior art references is significantly stronger when the references seek to solve the same problem, come from the same field, and correspond well. *In re Inland Steel Co.*, 265 F.3d 1354, 1362 (Fed. Cir. 2001). The Federal Circuit allowed two references to be combined as invalidating art when "[the prior art] focus[es] on the same problem that the . . . patent addresses . . . Moreover, both [prior art references] come from the same field . . . Finally, the solutions to the identified problems found in the two references correspond well." *Id.* at 1362.

In *KSR*, the Supreme Court emphasized that inventions arising from ordinary innovation, ordinary skill, or common sense should not be patentable. *See KSR Int'l Co. v. Teleflex Inc.*, 550 U.S. 398 (2007). Although a patent challenger is not required to show that one of ordinary skill in the art would have had a specific motivation to combine prior art references, such a showing may

be helpful to the obviousness analysis. *Id.* at 418; *see also id.* at 402. Exemplary rationales that may support a conclusion of obviousness include:

- Combining various claimed elements known in the prior art according to known methods to yield a predictable result;
- Making a simple substitution of one or more known elements for another to obtain a predictable result;
- Using a known technique to improve a similar device or method in the same way;
- Applying a known technique to a known device or method ready for improvement to yield a predictable result;
- Choosing from a finite number of identified, predictable solutions with a reasonable expectation of success, such that the solution was one which was "obvious to try";
- A known work in one field of endeavor prompting variations of it for use either in the same field or a different field based on design incentives or other market forces in which the variations were predictable to one of ordinary skill in the art; and
- A teaching, suggestion, or motivation in the prior art that would have led one of ordinary skill in the art to modify the prior art reference or to combine the teachings of various prior art references to arrive at the claimed invention.

Although Defendant contends that no specific motivation to combine is necessary for the references cited in the attached exhibits, consistent with the Patent Rules, Defendant hereby identifies additional motivations and reasons to combine the cited art. These exemplary discussions regarding obviousness are illustrative, and not intended to be exhaustive. To the extent ACT challenges a combination of prior art with respect to a particular element, Defendant reserves all rights to supplement these Contentions to further specify the motivation to combine the prior art. Defendant may rely on cited or uncited portions of the prior art, other documents, and/or expert testimony to establish that a person of ordinary skill in the art would have been motivated to modify or combine the prior art so as to render the claims invalid as obvious.

First, one of skill in the art would have been motivated to combine one or more of: (i) the admitted prior art; and/or (ii) the references identified in Appendix E, with one another, because

they all relate to common objectives and subject matter. The references share commonalities in terms of their general subject matter, as well as the types of equipment, products, and/or approaches they describe. Moreover, a person of ordinary skill would have been motivated to combine the above prior art based on the nature of the problem to be solved, the teachings of the prior art, and the knowledge of persons of ordinary skill in the art. The identified prior art addresses the same or similar technical issues and suggests the same or similar solutions to those issues. To the extent ACT challenges a combination of prior art with respect to a particular element, Defendant may supplement these contentions to further specify the motivation to combine the prior art. Defendant may rely on cited or uncited portions of the prior art, other documents, and/or expert testimony to establish that a person of ordinary skill in the art would have been motivated to modify or combine the prior art so as to render the claims invalid as obvious. For example, each of the following relate to the same technical issues: managing media content over a network: Sloss, Lamkin, Bijnens, Holub, Rou, Tsuda, Teng, Roden, Ito, 2006 DLNA standards, 2004 DLNA Whitepaper, 2006 DLNA Whitepaper, Prior Art Systems Implementing DLNA Standards, PlayStation 3 / PS3 Media Server System, Xbox 360 System, Pioneer BDP-HD1 System, Plex System, Nokia N95 System, Nokia N80 System, Archos Video Player System, Nero MediaHome System, WinDVD System, Windows Media Player System, VLC Media Player System, Winamp System, and iTunes System.

Second, a person of ordinary skill in the art would have understood that the references identified in Appendix E explicitly or implicitly reference other prior art that share common authors or inventors, were published in the same journals, presented at the same conferences, were presented as proposals to standards working groups, and/or were developed at common companies, schools, or organizations, all of which would motivate one of skill in the art to combine them.

Design incentives and other market forces would have prompted those combinations and modifications. "When there is a design or market pressure to solve a problem and there are a finite number of identified, predictable solutions, a person of ordinary skill has good reason to pursue known options within his or her technical grasp." *KSR Int'l, 127 S. Ct.* at 1742. Moreover, some pieces of prior art refer to or discuss other pieces of prior art, illustrating the close technical relationship among the prior art. To the extent any piece of prior art refers to or discusses other pieces of prior art, either expressly or inherently, it would have been obvious to combine those pieces of prior art for that reason. For example, the '101 patent describes the existence of standardized DLNA guidelines that discuss media management over a network. For example, Lamkin also references the DLNA network standards. Sloss, Bijnens, Holub, Rou, Tsuda, Teng, Roden, and Ito, also discuss media management over a network, which fall under the DLNA network standards. It would have been obvious to combine any of the references in Appendix E and the admitted prior art with these established standards as each was intended to improve or build upon these standards.

Third, the references identified in Appendix E and the admitted prior art are also directed to similar subject matter within that field. Additionally, any products, devices, or processes described in the references existed and/or were invented before or during the period in which the claimed inventions were developed, providing further motivation to combine them. For example, each of the following relate to managing media content over a network around March 2, 2007: Sloss, Lamkin, Bijnens, Holub, Rou, Tsuda, Teng, Roden, Ito, 2006 DLNA standards, 2004 DLNA Whitepaper, 2006 DLNA Whitepaper, Prior Art Systems Implementing DLNA Standards, PlayStation 3 / PS3 Media Server System, Xbox 360 System, Pioneer BDP-HD1 System, Plex System, Nokia N95 System, Nokia N80 System, Archos Video Player System, Nero MediaHome

System, WinDVD System, Windows Media Player System, VLC Media Player System, Winamp System, and iTunes System.

Fourth, one or more combinations of the admitted prior art and prior art references identified in Appendix A, pursuant to P.R. 3–3(b), would have been obvious because these references would have been combined with one another using: known methods to yield predictable results; known techniques in the same way; a simple substitution of one known, equivalent element for another to obtain predictable results; and/or a teaching, suggestion, or motivation in the prior art generally. The Asserted Claims are obvious, in part, because they merely arrange old elements, with each performing the same function that had been known, to perform and yield no more than what one of ordinary skill would expect from such an arrangement. Because there were a finite number of predictable solutions in the art of delivering content in response to a request, it would have been obvious to a person of ordinary skill in the art to pursue the known options. The identified prior art references merely use those familiar elements for their primary or well-known purposes and in a manner well within the ordinary level of skill in the art. Accordingly, common sense and the knowledge of the prior art render the Asserted Claims invalid as well. For example, the'101 patent addressed an issue of being able to keep track of where each piece of media or data was stored, in internal storage or network storage. Then, displaying this information in a list, or more specifically, a tree format. *See* '101 patent at 5:53-67. Lamkin also discloses a listing feature being displayed on the user interface (the network player), listing the contents being stored in local network (internal storage) and on the remote network (network storage). Lamkin also mentions that the contents are stored in an organized structure, similar to a file structure (or tree structure). Furthermore, there were only a finite number of ways to keep track of and display where media is stored. It would have been obvious to a POSA to use a list and tree organizational structure to

inform the user where each piece of media was stored, in internal storage or network storage. In addition, the combination of prior art references identified above would have been obvious because the combinations represent known potential options with a reasonable expectation of success.

Fifth, additional evidence that there would have been a motivation to combine the prior art references identified in Appendix E and/or the admitted prior art, includes, for example, the interrelated teachings of multiple prior art references; the effects of demands known to the design community or present in the marketplace; the existence of a known problem for which there was an obvious solution encompassed by the Asserted Claims; the existence of a known need or problem in the field of the endeavor at the time of the invention(s); and the background knowledge that would have been possessed by a person having ordinary skill in the art. For example, the ’101 patent addressed the desire in the field of being able to keep track of where each piece of media or data was stored, in internal storage or network storage. Then, displaying this information in a list, or more specifically, a tree format. *See* ’101 patent at 5:53-67. Lamkin discloses a listing feature being displayed on the user interface (the network player), listing the contents being stored in local network (internal storage) and on the remote network (network storage). Furthermore it would have been obvious to a POSA to use a list to keep track and inform the user of where each piece of media was stored, in internal storage or network storage. In addition, the combination of prior art references identified above would have been obvious because the combinations represent known potential options with a reasonable expectation of success.

For another example, as of the alleged priority date of the ’101 patent, a problem in the field was that with growing sizes of media data, HDD (hard disk devices) portable players had limited storage space. So, if a user wanted to add more media and the device had insufficient capacity free, stored content would need to be deleted in order to store further new contents. *See*

[redacted]

’101 patent at 1:47-2:11. As of the alleged priority date, it was well known in the field that one solution would be to transfer data from local storage to network storage, which would save and optimize space on the portable player local storage. This allowed a user to continue building a larger media library and share/stream media among multiple networked devices, all without the need to delete data to make room for more data.

Sixth, a person of ordinary skill at the time of the alleged invention had reason to combine or modify one or more of the references identified in Appendix E and/or the admitted prior art, with other prior art references in Appendix E and/or the admitted prior art, in light of the knowledge of a person of ordinary skill in the art at the time of the invention and information in the prior art cited herein. For example, the references in Appendix E and the admitted prior art all generally relate to management media content over a network. Thus, they are all directed to features within the same field and one of ordinary skill in the art at the time of the alleged invention would have been motivated to look to these teachings in the field and combine any of these known technologies.

Seventh, many of the references in Appendix E and/or the admitted prior art, have common design features, such as digital media contents, a server device, internal storage, a network storage device, network player, and features to control data transfer and search for data. One of ordinary skill in the art would have been motivated and found it obvious to combine these references, with a reasonable expectation of success, because they not only share identical components, but they also take the same approach.

In addition to the exemplary motivations, suggestions, or reasons to combine described above, Defendant identifies additional obviousness combinations and motivations to combine in the sections below. The exemplary motivations, suggestions, or reasons to combine described

above and below are not exclusive or exhaustive, and should not be interpreted as indicating that any Asserted Claim is not already anticipated under 35 U.S.C. § 102. Defendant may identify further examples as the case proceeds. In addition, Defendant provides additional reasons to combine various disclosures below.

(i) "List Information Transmission" Limitations

Independent claims 1 and 7 and dependent claim 5 of the '101 patent recite limitations directed to a "list information transmission unit," as bolded below:

> 1. A server device for media, the server device for media comprising:
> an internal storage device for storing digital contents, wherein the server device for media responds to a data transmission request from a network player by stream-delivering corresponding data in corresponding digital contents from the internal storage device to the network player during connection to a network;
>
> a transfer control unit adapted to transfer and store part of held digital contents in the internal storage device to a network storage device, wherein the network storage device is connected to the network and is capable of storing data, and wherein said transfer control unit does not transfer, from the internal storage device to the network storage device, the digital contents that cannot be recovered if a network failure occurs during the transferring of the digital contents from the internal storage device to the network storage device;
>
> **a list information transmission unit adapted to respond to a list presentation request for the held digital contents of the server device for media from the network player by transmitting list information to the network player, wherein the list information lists the digital contents left in the internal storage device and the digital contents transferred from the internal storage device to the network storage device and stored in the network storage device, and wherein the list information maintains a tree structure of the digital contents in the internal storage device before transferring the digital contents to the network storage device;**
>
> a search unit adapted to respond to a data transmission request for the held digital contents from the network player by searching for a location where the held digital contents are currently stored; and
>
> a digital contents data transmission processing unit adapted to allow the corresponding data in held digital contents to be stream-delivered from the network storage device to the network player, if the result of search shows the network storage device,
>
> wherein the server device for media is a media player.

5. The server device for media according to claim 1, **wherein said list information transmission unit makes the list information to be transmitted to the network player include information for identifying whether each digital content is currently stored in the internal storage device or the network storage device in the display list of the network player.**

7. A method for controlling a server device for media which is equipped with an internal storage device for storing digital contents, the method comprising the steps of:

responding to a data transmission request from a network player by stream-delivering corresponding data in corresponding digital contents from the internal storage device to the network player during connection to a network;

transferring and storing part of held digital contents in the internal storage device to a network storage device, wherein the network storage device is connected to the network and is capable of storing data, and wherein the digital contents that cannot be recovered if a network failure occurs during the transferring of the digital contents are not transferred from the internal storage device to the network storage device;

responding to a list presentation request for the held digital contents of the server device for media from the network player by transmitting list information to the network player, wherein the list information lists the digital contents left in the internal storage device and the digital contents transferred from the internal storage device to the network storage device and stored in the network storage device, and wherein the list information maintains a tree structure of the digital contents in the internal storage device before transferring the digital contents to the network storage device;

responding to a data transmission request for the held digital contents from the network player by searching for a location where the held digital contents are currently stored; and

allowing the corresponding data in held digital contents to be stream-delivered from the network storage device to the network player, if the result of search shows the network storage device,

wherein the service device for media is a media player.

According to the ’101 specification, a “list information transmission means” responds to “a list presentation request for the held digital contents of the server device for media from the network player by transmitting list information to the network player, wherein the list information makes the digital contents left in the internal storage device and the digital contents transferred from the internal storage device to the network storage device and stored in the network storage device as the held digital contents of the internal storage device.” ’101 patent at 1:27-36. The

[redacted]

specification also states that "[t]he list information transmitting routine is executed when the server device for media receives a list information transmission request from the network player." '101 patent at 9:64-67.

Listing where media or digital contents are stored (whether in internal device storage or network device storage) was known in the art. For example, Lamkin mentions the listing feature being displayed on the user interface (network player), indicating listing of contents being stored in local network (internal storage) and remote network (network storage). Lamkin also mentions that the contents are stored in an organized structure, similar to a file structure (tree structure), (which will maintain the tree structure before transmitting the content from internal storage to network storage). *See* Lamkin [0087], [0095], and FIG. 5 and FIG. 6.

To the extent ACT contends that the admitted prior art or any of the references identified in Appendix E do not disclose the "listing information" limitation, a person of ordinary skill in the art would have arrived at the purported invention based on the background knowledge, and/or one or more of the prior art references identified in the charts attached as Exhibits.

A POSA would be motivated to combine the "list information" limitation as disclosed in, *e.g.*, Lamkin, Rou, Teng, Roden, 2006 DLNA standards, 2004 DLNA Whitepaper, 2006 DLNA Whitepaper, Prior Art Systems Implementing DLNA Standards, PlayStation 3 / PS3 Media Server System, Xbox 360 System, Pioneer BDP-HD1 System, Plex System, Nokia N95 System, Nokia N80 System, Archos Video Player System, Nero MediaHome System, WinDVD System, Windows Media Player System, VLC Media Player System, Winamp System, and iTunes System. A POSA would have thus had a reasonable expectation of success in combining the "list information" disclosed in *e.g.*, Lamkin, Rou, Teng, Roden, 2006 DLNA standards, 2004 DLNA Whitepaper, 2006 DLNA Whitepaper, Prior Art Systems Implementing DLNA Standards,

PlayStation 3 / PS3 Media Server System, Xbox 360 System, Pioneer BDP-HD1 System, Plex System, Nokia N95 System, Nokia N80 System, Archos Video Player System, Nero MediaHome System, WinDVD System, Windows Media Player System, VLC Media Player System, Winamp System, and iTunes System, and a network media server, used for managing media content over a network, disclosed in, *e.g.*, Sloss, Lamkin, Bijnens, Holub, Rou, Tsuda, Teng, Roden, 2006 DLNA standards, 2004 DLNA Whitepaper, 2006 DLNA Whitepaper, Prior Art Systems Implementing DLNA Standards, PlayStation 3 / PS3 Media Server System, Xbox 360 System, Pioneer BDP-HD1 System, Plex System, Nokia N95 System, Nokia N80 System, Archos Video Player System, Nero MediaHome System, WinDVD System, Windows Media Player System, VLC Media Player System, Winamp System, and iTunes System. The prior art references are in the field of network data distribution for media, as a solution for the growing need for more storage and flexibility in playback from multiple devices. It was well known in the art that digital contents could be offloaded from internal storage to network storage and then retrieved from different networked devices. It would have been obvious to a POSA to combine the list information disclosed in, *e.g.*, Lamkin, Rou, Teng, Roden, 2006 DLNA standards, 2004 DLNA Whitepaper, 2006 DLNA Whitepaper, Prior Art Systems Implementing DLNA Standards, PlayStation 3 / PS3 Media Server System, Xbox 360 System, Pioneer BDP-HD1 System, Plex System, Nokia N95 System, Nokia N80 System, Archos Video Player System, Nero MediaHome System, WinDVD System, Windows Media Player System, VLC Media Player System, Winamp System, and iTunes System, with the network media system, allowing for the user to see where each piece of media was stored (internal storage or network storage).

(ii) "Digital Contents Data Transmission Processing" Limitations

Independent claims 1 and 7 and dependent claims 2 and 3 of the ’101 patent recite limitations directed to a “list information transmission unit,” as bolded below:

> 1. A server device for media, the server device for media comprising:
> an internal storage device for storing digital contents, wherein the server device for media responds to a data transmission request from a network player by stream-delivering corresponding data in corresponding digital contents from the internal storage device to the network player during connection to a network;
>
> a transfer control unit adapted to transfer and store part of held digital contents in the internal storage device to a network storage device, wherein the network storage device is connected to the network and is capable of storing data, and wherein said transfer control unit does not transfer, from the internal storage device to the network storage device, the digital contents that cannot be recovered if a network failure occurs during the transferring of the digital contents from the internal storage device to the network storage device;
>
> a list information transmission unit adapted to respond to a list presentation request for the held digital contents of the server device for media from the network player by transmitting list information to the network player, wherein the list information lists the digital contents left in the internal storage device and the digital contents transferred from the internal storage device to the network storage device and stored in the network storage device, and wherein the list information maintains a tree structure of the digital contents in the internal storage device before transferring the digital contents to the network storage device;
>
> a search unit adapted to respond to a data transmission request for the held digital contents from the network player by searching for a location where the held digital contents are currently stored; and
>
> **a digital contents data transmission processing unit adapted to allow the corresponding data in held digital contents to be stream-delivered from the network storage device to the network player, if the result of search shows the network storage device,**
>
> wherein the server device for media is a media player.
>
> 2. The server device for media according to claim 1, **wherein said digital contents data transmission processing unit causes the network storage device to transmit the corresponding data to the server device for media, and then transmits the corresponding data received from the network storage device from the server device for media to the network player.**
>
> 3. The server device for media according to claim 1, **wherein said digital contents data transmission processing unit transmits the corresponding data and information for identifying the network storage device to the network player, and causes the network storage device to directly transmit the corresponding data to the network player.**

[redacted]

7. A method for controlling a server device for media which is equipped with an internal storage device for storing digital contents, the method comprising the steps of:

responding to a data transmission request from a network player by stream-delivering corresponding data in corresponding digital contents from the internal storage device to the network player during connection to a network;

transferring and storing part of held digital contents in the internal storage device to a network storage device, wherein the network storage device is connected to the network and is capable of storing data, and wherein the digital contents that cannot be recovered if a network failure occurs during the transferring of the digital contents are not transferred from the internal storage device to the network storage device;

responding to a list presentation request for the held digital contents of the server device for media from the network player by transmitting list information to the network player, wherein the list information lists the digital contents left in the internal storage device and the digital contents transferred from the internal storage device to the network storage device and stored in the network storage device, and wherein the list information maintains a tree structure of the digital contents in the internal storage device before transferring the digital contents to the network storage device;

responding to a data transmission request for the held digital contents from the network player by searching for a location where the held digital contents are currently stored; and

allowing the corresponding data in held digital contents to be stream-delivered from the network storage device to the network player, if the result of search shows the network storage device,

wherein the service device for media is a media player.

According to the ’101 specification, a “digital contents data transmission processing means” allows “the corresponding data to be stream-delivered from the network storage device to the network player, if the result of search shows the network storage device.” ’101 patent at 2:41-44. The specification also states that “[t]he digital contents data transmitting routine is executed when the server device for media receives the data transmission request from the network player.” ’101 patent at 9:67-10:2.

Stream delivering digital contents from network storage to a network player was well known in the art. For example, Sloss discloses a streaming module through which required content is transmitted to the user, where the streaming module calls the stream redirector to determine the

path of required content (i.e. for the location of content being stored, it will find a match and correctly identify the edge server (network storage)) and then it returns a streaming path that redirects the viewer to a media server (network player.) *See* Sloss at 24:4-25:7, 25:17-26:2, and FIG. 13. Bijnens also discloses a method in which while streaming, the requested content is being transmitted from streaming server (network storage) to buffer (internal storage) on the client computer, with the desktop needing a streaming application to play the streaming such as Microsoft Windows Media Player, Apple QuickTime, etc, (network player). *See* Bijnens at 14, 41. Holub also discloses a library called libxio, which provides a user interface to access the contents stored in local files and in IBP infrastructure represented by a URI format, where the URI format indicates the location of content, i.e. where the content is being stored (identifying information). It also mentions that a MPlayer media player is used to play content directly using IBP (network storage). *See* Holub at 18-19.

To the extent ACT contends that the admitted prior art or any of the references identified in Appendix E do not disclose the "digital contents data transmission" limitation to transfer data between the network storage device, server device, and network player, a person of ordinary skill in the art would have arrived at the purported invention based on the background knowledge, and/or one or more of the prior art references identified in the charts attached as Exhibits.

A POSA would be motivated to combine the "digital contents data transmission" limitation as disclosed in, *e.g.*, Sloss, Bijnens, Holub, Lamkin, Roden, Ito, 2006 DLNA standards, 2004 DLNA Whitepaper, 2006 DLNA Whitepaper, Prior Art Systems Implementing DLNA Standards, PlayStation 3 / PS3 Media Server System, Xbox 360 System, Pioneer BDP-HD1 System, Plex System, Nokia N95 System, Nokia N80 System, Archos Video Player System, Nero MediaHome System, WinDVD System, Windows Media Player System, VLC Media Player System, Winamp

System, and iTunes System. A POSA would have thus had a reasonable expectation of success in combining the "digital contents data transmission" allowing for data to be transferred between network storage device, server device, and network player, disclosed in *e.g.*, Sloss, Bijnens, Holub, Lamkin, Roden, Ito, 2006 DLNA standards, 2004 DLNA Whitepaper, 2006 DLNA Whitepaper, Prior Art Systems Implementing DLNA Standards, PlayStation 3 / PS3 Media Server System, Xbox 360 System, Pioneer BDP-HD1 System, Plex System, Nokia N95 System, Nokia N80 System, Archos Video Player System, Nero MediaHome System, WinDVD System, Windows Media Player System, VLC Media Player System, Winamp System, and iTunes System, and a network media server, used for managing media content over a network, disclosed in, *e.g.*, Sloss, Lamkin, Bijnens, Holub, Rou, Tsuda, Teng, Roden, Ito, 2006 DLNA standards, 2004 DLNA Whitepaper, 2006 DLNA Whitepaper, Prior Art Systems Implementing DLNA Standards, PlayStation 3 / PS3 Media Server System, Xbox 360 System, Pioneer BDP-HD1 System, Plex System, Nokia N95 System, Nokia N80 System, Archos Video Player System, Nero MediaHome System, WinDVD System, Windows Media Player System, VLC Media Player System, Winamp System, and iTunes System. The prior art references are in the field of network data distribution for media, as a solution for the growing need for more storage and flexibility in playback from multiple devices. It was well known in the art that digital contents could be moved from internal storage (on the server device) to network storage, and then be retrieved from either storage space and transferred to different networked devices (network players). It would have been obvious to a POSA to combine the "digital contents data transmission" disclosed in *e.g.*, Sloss, Bijnens, Holub, Lamkin, Roden, Ito, 2006 DLNA standards, 2004 DLNA Whitepaper, 2006 DLNA Whitepaper, Prior Art Systems Implementing DLNA Standards, PlayStation 3 / PS3 Media Server System, Xbox 360 System, Pioneer BDP-HD1 System, Plex System, Nokia N95 System, Nokia N80

System, Archos Video Player System, Nero MediaHome System, WinDVD System, Windows Media Player System, VLC Media Player System, Winamp System, and iTunes System, with the network media system, allowing for the data to be transferred between network storage and internal storage and streamed to any networked network player.

(iii) "Transfer Control" Limitations

Independent claims 1 and 7 and dependent claim 4 of the '101 patent recite limitations directed to a "transfer control unit," as bolded below:

> 1. A server device for media, the server device for media comprising:
> an internal storage device for storing digital contents, wherein the server device for media responds to a data transmission request from a network player by stream-delivering corresponding data in corresponding digital contents from the internal storage device to the network player during connection to a network;
>
> **a transfer control unit adapted to transfer and store part of held digital contents in the internal storage device to a network storage device, wherein the network storage device is connected to the network and is capable of storing data, and wherein said transfer control unit does not transfer, from the internal storage device to the network storage device, the digital contents that cannot be recovered if a network failure occurs during the transferring of the digital contents from the internal storage device to the network storage device;**
>
> a list information transmission unit adapted to respond to a list presentation request for the held digital contents of the server device for media from the network player by transmitting list information to the network player, wherein the list information lists the digital contents left in the internal storage device and the digital contents transferred from the internal storage device to the network storage device and stored in the network storage device, and wherein the list information maintains a tree structure of the digital contents in the internal storage device before transferring the digital contents to the network storage device;
>
> a search unit adapted to respond to a data transmission request for the held digital contents from the network player by searching for a location where the held digital contents are currently stored; and
>
> a digital contents data transmission processing unit adapted to allow the corresponding data in held digital contents to be stream-delivered from the network storage device to the network player, if the result of search shows the network storage device,
>
> wherein the server device for media is a media player.

4. The server device for media according to claim 1, **further comprising a return control unit adapted to cause the digital contents corresponding to a predetermined condition among the digital contents which have been transferred to the network storage device to be returned from the network storage device to the internal storage device.**

7. A method for controlling a server device for media which is equipped with an internal storage device for storing digital contents, the method comprising the steps of:

responding to a data transmission request from a network player by stream-delivering corresponding data in corresponding digital contents from the internal storage device to the network player during connection to a network;

transferring and storing part of held digital contents in the internal storage device to a network storage device, wherein the network storage device is connected to the network and is capable of storing data, and wherein the digital contents that cannot be recovered if a network failure occurs during the transferring of the digital contents are not transferred from the internal storage device to the network storage device;

responding to a list presentation request for the held digital contents of the server device for media from the network player by transmitting list information to the network player, wherein the list information lists the digital contents left in the internal storage device and the digital contents transferred from the internal storage device to the network storage device and stored in the network storage device, and wherein the list information maintains a tree structure of the digital contents in the internal storage device before transferring the digital contents to the network storage device;

responding to a data transmission request for the held digital contents from the network player by searching for a location where the held digital contents are currently stored; and

allowing the corresponding data in held digital contents to be stream-delivered from the network storage device to the network player, if the result of search shows the network storage device,

wherein the service device for media is a media player.

According to the ’101 specification, a “transfer control means” refers to “transferring and storing part of held digital contents in the internal storage device to a network storage device, wherein the network storage device is connected to the network and is capable of storing data” ’101 patent at 2:23-26. The specification also states that “[t]he transfer control means selects the digital contents from the held digital contents in the internal storage device to transfer to the network storage device according to any criteria. For example, in the present case, the transfer control means can select, as the contents to be transferred, (al) a digital content which the user of

the server device for media and/or the network player has not been played in a predetermined period past from the present; (a2) a digital content which has not been subjected to the self-playback in the server device for media and only has been subjected to the network-playback in the network storage device; (a3) all the digital contents to a predetermined order in the ascending order of the playback frequency; or (a4) a digital content over a predetermined size." '101 patent at 6:57-7:3. The specification also states that "[t]he transfer control means transfers part of the held digital contents from the internal storage device to the network storage device for any reason. For example, the reason may be (b1) the user needs a predetermined free capacity for storing a new digital content since the internal storage device is nearly filled with the digital contents stored up to the present time; or (b2) the user wants to transfer the held digital contents to the network storage device instead of deleting them in the case of using the contents in the future." '101 patent at 7:4-12. The patent specification also addresses a problem in the field, "[f]or the purpose of copyright protection, some digital contents are adapted not to permit the overlapped part of the same content exists in a plurality of storage devices for more than several seconds in the playback time, for example. If the transferring operation of such a digital content from the internal storage device to the network storage device is interrupted by a failure in the network the like, the original digital content cannot be recovered neither in the internal storage device nor the network storage device, which causes a great damage to the user. As a countermeasure to deal with the problem, the transfer control means preferably does not transfer, from the internal storage device to the network storage device, the digital contents that cannot be recovered if the network failure occurs during the transferring of the digital contents from the internal storage device to the network storage device." '101 patent at 9:26-41.

Transferring media from internal storage to external storage was known in the art. For example, Tsuda discloses the transfer feature in "[t]he video and audio data transmitting apparatus that transmits the video and audio data recorded on the first recording medium to the second recording medium includes: a conversion processing unit 103 that converts the format of the video and audio data recorded on the first recording medium; a conversion detail judgment unit 101 that judges the conversion details concerning the video and audio data; and a playback disabling unit 106 that makes the video and audio data recorded on the first recording medium unavailable for playback in a recoverable manner based on the judgment made by the conversion detail judgment unit 101. The video and audio data transmitting apparatus makes it possible to solve a conventional problem." Tsuda at Abstract. Ito also discloses the transfer feature explaining that "although the HDD is convenient, it requires rotation and seek operations for each writing or reading of information. Accordingly, increase in the use frequency of the HDD causes a defect occurrence rate to increase. If the HDD has a defect, the data recorded thereon might be lost. It is considered that making a backup of a content on another storage medium or a recording device is effective in preventing the data from being lost due to a defect of the HDD. However, even if it is for the purpose of making a backup, if a content containing CCI indicating Copy Once is moved to another medium, the content is deleted from the HD recorder. This reduces the convenience for the user." Ito at [0005].

Tsuda also discloses a solution to the copyright issue mentioned in the '101 patent. Tsuda discloses a way where video and audio data is transferred from a first recording medium (like an HDD) (internal storage) to a second recording medium (like a portable optical disk or memory card) (external storage) and then becomes unavailable on the first recording medium to avoid any copyright issue. Tsuda at [0043], FIG. 1A, FIG. 1B. Ito also discloses a way to combat the

copyright issue mentioned in the ’101 patent. Ito explains that “if making a copy of a content is permitted for the purpose of making a backup thereof, a malicious user may copy the content in an unauthorized manner by using this function. When this happens, the right of the copyright owner cannot be protected fully. The object of the present invention is therefore to provide a backup system, recording/playback device, backup device, backup method, program, and recording medium that can make a backup of a content, while balancing between the protection of the copyright and the convenience of the user.” Ito at [0006]-[0007]. Ito also explains that, “[a] content of Copy Once cannot be copied to an external device or the like, even for the purpose of making a backup. This is inconvenient for the user. However, if copying to another device for the purpose of making a backup is permitted, the content may be copied in an unauthorized manner. The present invention provides the hard disk recorder that transmits the content to the backup device, sets an expiration time in the content stored in the hard disk recorder itself, and deletes the content stored in the hard disk recorder itself after the expiration time expires.” Ito at Abstract.

To the extent ACT contends that the admitted prior art or any of the references identified in Appendix E do not disclose the “transfer control” limitation, a person of ordinary skill in the art would have arrived at the purported invention based on the background knowledge, and/or one or more of the prior art references identified in the charts attached as Exhibits.

A POSA would be motivated to combine the “transfer control” limitation as disclosed in, *e.g.*, Tsuda, Sloss, Lamkin, Rou, Teng, Roden, Ito, 2006 DLNA standards, 2004 DLNA Whitepaper, 2006 DLNA Whitepaper, Prior Art Systems Implementing DLNA Standards, PlayStation 3 / PS3 Media Server System, Xbox 360 System, Pioneer BDP-HD1 System, Plex System, Nokia N95 System, Nokia N80 System, Archos Video Player System, Nero MediaHome System, WinDVD System, Windows Media Player System, VLC Media Player System, Winamp

System, and iTunes System. A POSA would have thus had a reasonable expectation of success in combining the "transfer control" disclosed in *e.g.*, Tsuda, Sloss, Lamkin, Rou, Teng, Roden, Ito, 2006 DLNA standards, 2004 DLNA Whitepaper, 2006 DLNA Whitepaper, Prior Art Systems Implementing DLNA Standards, PlayStation 3 / PS3 Media Server System, Xbox 360 System, Pioneer BDP-HD1 System, Plex System, Nokia N95 System, Nokia N80 System, Archos Video Player System, Nero MediaHome System, WinDVD System, Windows Media Player System, VLC Media Player System, Winamp System, and iTunes System, and a network media server, used for managing media content over a network, disclosed in, *e.g.*, Sloss, Lamkin, Bijnens, Holub, Rou, Tsuda, Teng, Roden, Ito, 2006 DLNA standards, 2004 DLNA Whitepaper, 2006 DLNA Whitepaper, Prior Art Systems Implementing DLNA Standards, PlayStation 3 / PS3 Media Server System, Xbox 360 System, Pioneer BDP-HD1 System, Plex System, Nokia N95 System, Nokia N80 System, Archos Video Player System, Nero MediaHome System, WinDVD System, Windows Media Player System, VLC Media Player System, Winamp System, and iTunes System. The prior art references are in the field of network data distribution for media, as a solution for the growing need for more storage and flexibility in playback from multiple devices. It was well known in the art that digital contents could be offloaded from internal storage to external storage. It was also well known in the art to have a transfer control means that would control how many copies of media there were to comply with copyright problems. It would have been obvious to a POSA to combine the transfer control disclosed in, *e.g.*, Tsuda, Sloss, Lamkin, Rou, Teng, Roden, Ito, 2006 DLNA standards, 2004 DLNA Whitepaper, 2006 DLNA Whitepaper, Prior Art Systems Implementing DLNA Standards, PlayStation 3 / PS3 Media Server System, Xbox 360 System, Pioneer BDP-HD1 System, Plex System, Nokia N95 System, Nokia N80 System, Archos Video Player System, Nero MediaHome System, WinDVD System, Windows Media Player System,

VLC Media Player System, Winamp System, and iTunes System, with the network media system, allowing for data to be transferred between internal storage and external storage (or network storage) while also controlling how many copies there were when transferring to comply with copyright rules.

c) Additional Combinations

For at least the reasons described above, it would have been obvious to one of ordinary skill in the art to combine each prior art reference listed in Appendix E with any other reference or references listed in Appendix A along with the knowledge of one of ordinary skill in the art to arrive at the inventions claims in the '101 patent.[30] For example, and without limitation, the Asserted Claims of the '101 patent would have been obvious to one of ordinary skill in the art in view of the following combinations:

Table 4-E: Additional Combinations for the '101 Patent

Patent No. or Title (Primary Inventor/Author)	In Combination with One or More of: (Patent No. or Title (Primary Inventor/Author))
Sloss	• Sloss • Lamkin • Bijnens • Holub • Rou • Tsuda • Teng • Roden • Ito • 2006 DLNA Standards • 2004 DLNA Whitepaper • 2006 DLNA Whitepaper

[30] Further, Defendant is actively searching for information regarding at least the systems, devices, and/or inventions listed above in Table 3-E. It would have been obvious to one of ordinary skill in the art to combine each of the prior art references listed in Appendix E with any of the systems identified in Table 3-E. Defendant reserves the right to supplement or amend these contentions as discovery progresses, to the extent permitted by the Court.

	• Prior Art Systems Implementing DLNA Standards • PlayStation 3 / PS3 Media Server System • Xbox 360 System • Pioneer BDP-HD1 System • Plex System • Nokia N95 System • Nokia N80 System • Archos Video Player System • Nero MediaHome System • WinDVD System • Windows Media Player System • VLC Media Player System • Winamp System • iTunes System • The knowledge of a person of ordinary skill in the art.
Lamkin	• Sloss • Lamkin • Bijnens • Holub • Rou • Tsuda • Teng • Roden • Ito • 2006 DLNA Standards • 2004 DLNA Whitepaper • 2006 DLNA Whitepaper • Prior Art Systems Implementing DLNA Standards • PlayStation 3 / PS3 Media Server System • Xbox 360 System • Pioneer BDP-HD1 System • Plex System • Nokia N95 System • Nokia N80 System • Archos Video Player System • Nero MediaHome System • WinDVD System • Windows Media Player System • VLC Media Player System

	• Winamp System • iTunes System • The knowledge of a person of ordinary skill in the art.
Tsuda	• Sloss • Lamkin • Bijnens • Holub • Rou • Tsuda • Teng • Roden • Ito • 2006 DLNA Standards • 2004 DLNA Whitepaper • 2006 DLNA Whitepaper • Prior Art Systems Implementing DLNA Standards • PlayStation 3 / PS3 Media Server System • Xbox 360 System • Pioneer BDP-HD1 System • Plex System • Nokia N95 System • Nokia N80 System • Archos Video Player System • Nero MediaHome System • WinDVD System • Windows Media Player System • VLC Media Player System • Winamp System • iTunes System • The knowledge of a person of ordinary skill in the art.
Teng	• Sloss • Lamkin • Bijnens • Holub • Rou • Tsuda • Teng • Roden • Ito • 2006 DLNA Standards

	• 2004 DLNA Whitepaper • 2006 DLNA Whitepaper • Prior Art Systems Implementing DLNA Standards • PlayStation 3 / PS3 Media Server System • Xbox 360 System • Pioneer BDP-HD1 System • Plex System • Nokia N95 System • Nokia N80 System • Archos Video Player System • Nero MediaHome System • WinDVD System • Windows Media Player System • VLC Media Player System • Winamp System • iTunes System • The knowledge of a person of ordinary skill in the art.
Roden	• Sloss • Lamkin • Bijnens • Holub • Rou • Tsuda • Teng • Roden • Ito • 2006 DLNA Standards • 2004 DLNA Whitepaper • 2006 DLNA Whitepaper • Prior Art Systems Implementing DLNA Standards • PlayStation 3 / PS3 Media Server System • Xbox 360 System • Pioneer BDP-HD1 System • Plex System • Nokia N95 System • Nokia N80 System • Archos Video Player System • Nero MediaHome System • WinDVD System

	• Windows Media Player System • VLC Media Player System • Winamp System • iTunes System • The knowledge of a person of ordinary skill in the art.
Ito	• Sloss • Lamkin • Bijnens • Holub • Rou • Tsuda • Teng • Roden • Ito • 2006 DLNA Standards • 2004 DLNA Whitepaper • 2006 DLNA Whitepaper • Prior Art Systems Implementing DLNA Standards • PlayStation 3 / PS3 Media Server System • Xbox 360 System • Pioneer BDP-HD1 System • Plex System • Nokia N95 System • Nokia N80 System • Archos Video Player System • Nero MediaHome System • WinDVD System • Windows Media Player System • VLC Media Player System • Winamp System • iTunes System • The knowledge of a person of ordinary skill in the art.
2006 DLNA Standards	• Sloss • Lamkin • Bijnens • Holub • Rou • Tsuda • Teng • Roden

	• Ito • 2006 DLNA Standards • 2004 DLNA Whitepaper • 2006 DLNA Whitepaper • Prior Art Systems Implementing DLNA Standards • PlayStation 3 / PS3 Media Server System • Xbox 360 System • Pioneer BDP-HD1 System • Plex System • Nokia N95 System • Nokia N80 System • Archos Video Player System • Nero MediaHome System • WinDVD System • Windows Media Player System • VLC Media Player System • Winamp System • iTunes System • Any system implementing DLNA can also be combined with any other system implementing DLNA in addition to the standard itself and any publications describing DLNA. • The knowledge of a person of ordinary skill in the art.
2004 DLNA Whitepaper	• Sloss • Lamkin • Bijnens • Holub • Rou • Tsuda • Teng • Roden • Ito • 2006 DLNA Standards • 2004 DLNA Whitepaper • 2006 DLNA Whitepaper • Prior Art Systems Implementing DLNA Standards • PlayStation 3 / PS3 Media Server System • Xbox 360 System

	• Pioneer BDP-HD1 System • Plex System • Nokia N95 System • Nokia N80 System • Archos Video Player System • Nero MediaHome System • WinDVD System • Windows Media Player System • VLC Media Player System • Winamp System • iTunes System • Any system implementing DLNA can also be combined with any other system implementing DLNA in addition to the standard itself and any publications describing DLNA. • The knowledge of a person of ordinary skill in the art.
2006 DLNA Whitepaper	• Sloss • Lamkin • Bijnens • Holub • Rou • Tsuda • Teng • Roden • Ito • 2006 DLNA Standards • 2004 DLNA Whitepaper • 2006 DLNA Whitepaper • Prior Art Systems Implementing DLNA Standards • PlayStation 3 / PS3 Media Server System • Xbox 360 System • Pioneer BDP-HD1 System • Plex System • Nokia N95 System • Nokia N80 System • Archos Video Player System • Nero MediaHome System • WinDVD System • Windows Media Player System • VLC Media Player System

	• Winamp System • iTunes System • Any system implementing DLNA can also be combined with any other system implementing DLNA in addition to the standard itself and any publications describing DLNA. • The knowledge of a person of ordinary skill in the art.
Prior Art Systems Implementing DLNA Standards	• Sloss • Lamkin • Bijnens • Holub • Rou • Tsuda • Teng • Roden • Ito • 2006 DLNA Standards • 2004 DLNA Whitepaper • 2006 DLNA Whitepaper • Prior Art Systems Implementing DLNA Standards • PlayStation 3 / PS3 Media Server System • Xbox 360 System • Pioneer BDP-HD1 System • Plex System • Nokia N95 System • Nokia N80 System • Archos Video Player System • Nero MediaHome System • WinDVD System • Windows Media Player System • VLC Media Player System • Winamp System • iTunes System • Any system implementing DLNA can also be combined with any other system implementing DLNA in addition to the standard itself and any publications describing DLNA. • The knowledge of a person of ordinary skill in the art.

PlayStation 3 / PS3 Media Server System	• Sloss • Lamkin • Bijnens • Holub • Rou • Tsuda • Teng • Roden • Ito • 2006 DLNA Standards • 2004 DLNA Whitepaper • 2006 DLNA Whitepaper • Prior Art Systems Implementing DLNA Standards • PlayStation 3 / PS3 Media Server System • Xbox 360 System • Pioneer BDP-HD1 System • Plex System • Nokia N95 System • Nokia N80 System • Archos Video Player System • Nero MediaHome System • WinDVD System • Windows Media Player System • VLC Media Player System • Winamp System • iTunes System • Any system implementing DLNA can also be combined with any other system implementing DLNA in addition to the standard itself and any publications describing DLNA. • The knowledge of a person of ordinary skill in the art.
Xbox 360 System	• Sloss • Lamkin • Bijnens • Holub • Rou • Tsuda • Teng • Roden • Ito

	• 2006 DLNA Standards • 2004 DLNA Whitepaper • 2006 DLNA Whitepaper • Prior Art Systems Implementing DLNA Standards • PlayStation 3 / PS3 Media Server System • Xbox 360 System • Pioneer BDP-HD1 System • Plex System • Nokia N95 System • Nokia N80 System • Archos Video Player System • Nero MediaHome System • WinDVD System • Windows Media Player System • VLC Media Player System • Winamp System • iTunes System • Any system implementing DLNA can also be combined with any other system implementing DLNA in addition to the standard itself and any publications describing DLNA. • The knowledge of a person of ordinary skill in the art.
Pioneer BDP-HD1 System	• Sloss • Lamkin • Bijnens • Holub • Rou • Tsuda • Teng • Roden • Ito • 2006 DLNA Standards • 2004 DLNA Whitepaper • 2006 DLNA Whitepaper • Prior Art Systems Implementing DLNA Standards • PlayStation 3 / PS3 Media Server System • Xbox 360 System • Pioneer BDP-HD1 System

	• Plex System • Nokia N95 System • Nokia N80 System • Archos Video Player System • Nero MediaHome System • WinDVD System • Windows Media Player System • VLC Media Player System • Winamp System • iTunes System • Any system implementing DLNA can also be combined with any other system implementing DLNA in addition to the standard itself and any publications describing DLNA. • The knowledge of a person of ordinary skill in the art.
Plex System	• Sloss • Lamkin • Bijnens • Holub • Rou • Tsuda • Teng • Roden • Ito • 2006 DLNA Standards • 2004 DLNA Whitepaper • 2006 DLNA Whitepaper • Prior Art Systems Implementing DLNA Standards • PlayStation 3 / PS3 Media Server System • Xbox 360 System • Pioneer BDP-HD1 System • Plex System • Nokia N95 System • Nokia N80 System • Archos Video Player System • Nero MediaHome System • WinDVD System • Windows Media Player System • VLC Media Player System • Winamp System

	• iTunes System • Any system implementing DLNA can also be combined with any other system implementing DLNA in addition to the standard itself and any publications describing DLNA. • The knowledge of a person of ordinary skill in the art.
Nokia N95 System	• Sloss • Lamkin • Bijnens • Holub • Rou • Tsuda • Teng • Roden • Ito • 2006 DLNA Standards • 2004 DLNA Whitepaper • 2006 DLNA Whitepaper • Prior Art Systems Implementing DLNA Standards • PlayStation 3 / PS3 Media Server System • Xbox 360 System • Pioneer BDP-HD1 System • Plex System • Nokia N95 System • Nokia N80 System • Archos Video Player System • Nero MediaHome System • WinDVD System • Windows Media Player System • VLC Media Player System • Winamp System • iTunes System • Any system implementing DLNA can also be combined with any other system implementing DLNA in addition to the standard itself and any publications describing DLNA. • The knowledge of a person of ordinary skill in the art.
Nokia N80 System	• Sloss

	• Lamkin • Bijnens • Holub • Rou • Tsuda • Teng • Roden • Ito • 2006 DLNA Standards • 2004 DLNA Whitepaper • 2006 DLNA Whitepaper • Prior Art Systems Implementing DLNA Standards • PlayStation 3 / PS3 Media Server System • Xbox 360 System • Pioneer BDP-HD1 System • Plex System • Nokia N95 System • Nokia N80 System • Archos Video Player System • Nero MediaHome System • WinDVD System • Windows Media Player System • VLC Media Player System • Winamp System • iTunes System • Any system implementing DLNA can also be combined with any other system implementing DLNA in addition to the standard itself and any publications describing DLNA. • The knowledge of a person of ordinary skill in the art.
Archos Video Player System	• Sloss • Lamkin • Bijnens • Holub • Rou • Tsuda • Teng • Roden • Ito • 2006 DLNA Standards

	• 2004 DLNA Whitepaper • 2006 DLNA Whitepaper • Prior Art Systems Implementing DLNA Standards • PlayStation 3 / PS3 Media Server System • Xbox 360 System • Pioneer BDP-HD1 System • Plex System • Nokia N95 System • Nokia N80 System • Archos Video Player System • Nero MediaHome System • WinDVD System • Windows Media Player System • VLC Media Player System • Winamp System • iTunes System • Any system implementing DLNA can also be combined with any other system implementing DLNA in addition to the standard itself and any publications describing DLNA. • The knowledge of a person of ordinary skill in the art.
Nero MediaHome System	• Sloss • Lamkin • Bijnens • Holub • Rou • Tsuda • Teng • Roden • Ito • 2006 DLNA Standards • 2004 DLNA Whitepaper • 2006 DLNA Whitepaper • Prior Art Systems Implementing DLNA Standards • PlayStation 3 / PS3 Media Server System • Xbox 360 System • Pioneer BDP-HD1 System • Plex System

	• Nokia N95 System • Nokia N80 System • Archos Video Player System • Nero MediaHome System • WinDVD System • Windows Media Player System • VLC Media Player System • Winamp System • iTunes System • Any system implementing DLNA can also be combined with any other system implementing DLNA in addition to the standard itself and any publications describing DLNA. • The knowledge of a person of ordinary skill in the art.
WinDVD System	• Sloss • Lamkin • Bijnens • Holub • Rou • Tsuda • Teng • Roden • Ito • 2006 DLNA Standards • 2004 DLNA Whitepaper • 2006 DLNA Whitepaper • Prior Art Systems Implementing DLNA Standards • PlayStation 3 / PS3 Media Server System • Xbox 360 System • Pioneer BDP-HD1 System • Plex System • Nokia N95 System • Nokia N80 System • Archos Video Player System • Nero MediaHome System • WinDVD System • Windows Media Player System • VLC Media Player System • Winamp System • iTunes System

	• Any system implementing DLNA can also be combined with any other system implementing DLNA in addition to the standard itself and any publications describing DLNA. • The knowledge of a person of ordinary skill in the art.
Windows Media Player System	• Sloss • Lamkin • Bijnens • Holub • Rou • Tsuda • Teng • Roden • Ito • 2006 DLNA Standards • 2004 DLNA Whitepaper • 2006 DLNA Whitepaper • Prior Art Systems Implementing DLNA Standards • PlayStation 3 / PS3 Media Server System • Xbox 360 System • Pioneer BDP-HD1 System • Plex System • Nokia N95 System • Nokia N80 System • Archos Video Player System • Nero MediaHome System • WinDVD System • Windows Media Player System • VLC Media Player System • Winamp System • iTunes System • Any system implementing DLNA can also be combined with any other system implementing DLNA in addition to the standard itself and any publications describing DLNA. • The knowledge of a person of ordinary skill in the art.
VLC Media Player System	• Sloss • Lamkin

	• Bijnens • Holub • Rou • Tsuda • Teng • Roden • Ito • 2006 DLNA Standards • 2004 DLNA Whitepaper • 2006 DLNA Whitepaper • Prior Art Systems Implementing DLNA Standards • PlayStation 3 / PS3 Media Server System • Xbox 360 System • Pioneer BDP-HD1 System • Plex System • Nokia N95 System • Nokia N80 System • Archos Video Player System • Nero MediaHome System • WinDVD System • Windows Media Player System • VLC Media Player System • Winamp System • iTunes System • Any system implementing DLNA can also be combined with any other system implementing DLNA in addition to the standard itself and any publications describing DLNA. • The knowledge of a person of ordinary skill in the art.
Winamp System	• Sloss • Lamkin • Bijnens • Holub • Rou • Tsuda • Teng • Roden • 2006 DLNA Standards • 2004 DLNA Whitepaper • 2006 DLNA Whitepaper

	• Prior Art Systems Implementing DLNA Standards • PlayStation 3 / PS3 Media Server System • Xbox 360 System • Pioneer BDP-HD1 System • Plex System • Nokia N95 System • Nokia N80 System • Archos Video Player System • Nero MediaHome System • WinDVD System • Windows Media Player System • VLC Media Player System • Winamp System • iTunes System • Any system implementing DLNA can also be combined with any other system implementing DLNA in addition to the standard itself and any publications describing DLNA. • The knowledge of a person of ordinary skill in the art.
iTunes System	• Sloss • Lamkin • Bijnens • Holub • Rou • Tsuda • Teng • Roden • Ito • 2006 DLNA Standards • 2004 DLNA Whitepaper • 2006 DLNA Whitepaper • Prior Art Systems Implementing DLNA Standards • PlayStation 3 / PS3 Media Server System • Xbox 360 System • Pioneer BDP-HD1 System • Plex System • Nokia N95 System • Nokia N80 System

	• Archos Video Player System • Nero MediaHome System • WinDVD System • Windows Media Player System • VLC Media Player System • Winamp System • iTunes System • Any system implementing DLNA can also be combined with any other system implementing DLNA in addition to the standard itself and any publications describing DLNA. • The knowledge of a person of ordinary skill in the art.

d) Secondary Considerations

Additionally, Defendant notes that Plaintiff has neither provided any contention that secondary considerations of non-obviousness exist for any Asserted Patent nor provided any evidence of such secondary considerations. Defendant is not aware of any evidence supporting the existence of any such secondary considerations. This lack of evidence further renders the Asserted Claims obvious. Proving any such secondary considerations is ACT's burden. *See, e.g.*, *ZUP, LLC v. Nach Mfg., Inc.*, 896 F.3d 1365, 1373 (Fed. Cir. 2018) ("[A] patentee bears the burden of production with respect to evidence of secondary considerations of nonobviousness."). To date, ACT has identified no evidence of (1) commercial success of the claimed subject matter; (2) long felt but unresolved needs; (3) failure of others; (4) teaching away from the claimed subject matter by the prior art; (5) copying or acclamation by others; and (6) skepticism of experts—let alone any nexus between any alleged secondary considerations and the Asserted Claims. Defendant thus reserves the right to supplement its contentions with respect to secondary considerations once ACT has adequately identified such secondary considerations and/or their alleged nexus to the Asserted Claims.

"The fact of near-simultaneous invention, though not determinative of statutory obviousness, is strong evidence of what constitutes the level of ordinary skill in the art." *Ecolochem, Inc. v. S. Cal. Edison Co.*, 227 F.3d 1361, 1379 (Fed. Cir. 2000) (citing *The Int'l Glass Co. v. United States*, 187 Ct. Cl. 376, 408 F.2d 395, 405 (1969)). "[T]he possibility of near simultaneous invention by two or more equally talented inventors working independently, . . . may [] be an indication of obviousness when considered in light of all the circumstances." *Id.* (citing *Lindeman Maschinenfabrik GmbH v. American Hoist & Derrick Co.*, 730 F.2d 1452, 1460 (Fed. Cir. 1984)); *see also George M. Martin Co. v. Alliance Mach. Sys. Int'l LLC*, 618 F.3d 1284, 1305 (Fed. Cir. 2010) ("Independently made, simultaneous inventions, made within a comparatively short space of time, are persuasive evidence that the claimed apparatus was the product only of ordinary mechanical or engineering skill."). To the extent that any of the references in these preliminary invalidity contentions is found not to be prior art to the respective Asserted Patents, these references may be relied upon as evidence of near-simultaneous invention favoring obviousness.

To the extent ACT is permitted to introduce contentions and/or evidence concerning secondary considerations in the future, Defendant reserved all rights to rebut those contentions if and when ACT identifies them. In the meantime, Defendant notes the complete lack of any such evidence in the record. Moreover, Defendant further contends that, in any event, the evidence of obviousness for each asserted claim is so overwhelming that secondary considerations are necessarily insufficient to rebut Defendant's showing. *See, e.g.*, *Ohio Willow Wood Co. v. Alps South, LLC*, 735 F.3d 1333, 1344 (Fed. Cir. 2013) ("[W]here a claimed invention represents no more than the predictable use of prior art elements according to established functions, as here, evidence of secondary indicia are frequently deemed inadequate to establish non-obviousness.").

[redacted]

6. 35 U.S.C. § 112 Invalidity Under P.R. 3–3(d)

Pursuant to P.R. 3–3(d), Defendant contends that the Asserted Claims of the ’101 patent are invalid under 35 U.S.C. § 112 because the claims are indefinite, not enabled, or lack written description. Defendant’s contentions that the following claims are invalid under 35 U.S.C. § 112 are made in the alternative and do not constitute, and should not be interpreted as, admissions regarding the construction or scope of the claims of the ’101 patent, or that any of the claims of the ’101 patent are not anticipated or rendered obvious by prior art. The following contentions, made pursuant to P.R. 3–3(d), are subject to revision and amendment pursuant to P.R. 3–6 and Federal Rule of Civil Procedure 26(e) and the Orders of record in this matter to the extent appropriate, *e.g.*, in light of further investigation and discovery regarding the defenses, the Court’s construction of the claims at issue, and/or review and analysis of expert witnesses. Defendant offers these contentions in response to ACT’s Infringement Contentions and without prejudice to any position it may ultimately take as to any claim construction issues.

a) Indefiniteness under 35 U.S.C. § 112, Second Paragraph

35 U.S.C. § 112 includes a definiteness requirement. *See* 35 U.S.C. § 112, ¶ 2 (“[T]he specification shall conclude with one or more claims particularly pointing out and distinctly claiming the subject matter which the applicant regards as his invention.”). “[A] patent is invalid for indefiniteness if its claims, read in light of the specification delineating the patent, and the prosecution history, fail to inform, with reasonable certainty, those skilled in the art about the scope of the invention.” *Nautilus, Inc. v. Biosig Instruments, Inc.*, 134 S. Ct. 2120, 2124 (2014).

The Asserted Claims are invalid as indefinite under 35 U.S.C. § 112, second paragraph, for failing to particularly point out and distinctly claim the subject matter which the applicants regard as their invention. The specification of the ’101 patent provides no objective standard by which one of ordinary skill in the art could determine the meaning of the asserted claim elements. In

particular, at least the following claim terms are indefinite because they fail to particularly point out and distinctly claim the subject matter which the applicants regarded as their alleged inventions.[31]

This section addresses indefiniteness under 35 U.S.C. § 112, Second Paragraph, generally. Indefiniteness under 35 U.S.C. § 112, ¶¶ 6, specifically with respect to improper use of Means-Plus-Function and Step-Plus-Function terms is addressed in *Section* E.6.b, below.

Claim 1 and its dependent claims are invalid for indefiniteness as to the phrase "transfer" because this term, when read in light of the specification delineating the patent and the prosecution history, fails to inform, with reasonable certainty, those skilled in the art about the scope of the invention. For example, the limitation fails to inform a person of ordinary skill what "transfer" means, such as when the "transfer control unit does not transfer, from the internal storage device to the network storage device, the digital contents that cannot be recovered if a network failure occurs during the transferring of the digital contents from the internal storage device to the network storage device." The claim includes some logic to decide whether to "transfer" the data or not. A person of ordinary skill in the art would not understand how that decision is made to "transfer" the digital contents or not and the specification does not provide sufficient guidance.

Claim 1 and its dependent claims are invalid for indefiniteness as to the phrase "stream-delivered" because this term when read in light of the specification delineating the patent and the prosecution history, fail to inform, with reasonable certainty, those skilled in the art about the scope of the invention. For example, the limitation fails to inform a person of ordinary skill what "stream-delivered" means, such as when the "digital contents data transmission processing unit adapted to allow the corresponding data in held digital contents to be stream-delivered from

[31] Dependent claims are also invalid as being dependent upon a base claim that is indefinite under 35 U.S.C. § 112, second paragraph.

the network storage device to the network player, if the result of search shows the network storage device." Accordingly, a person of ordinary skill in the art would not understand the bounds of "stream-delivered." The specification does not explain what this term means or even if it merely means "transferred," and a person of ordinary skill would not be able to interpret that term.

Dependent claim 4 is invalid for indefiniteness as to the phrase "predetermined condition" because this term, when read in light of the specification and prosecution history, fails to inform those skilled in the art about the scope of the invention with reasonable certainty. For example, the limitation fails to inform a person of ordinary skill what "predetermined condition" means, such as when the "a return control unit adapted to cause the digital contents corresponding to a predetermined condition among the digital contents which have been transferred to the network storage device to be returned from the network storage device to the internal storage device." A person of ordinary skill in the art would not understand the temporal requirements as to when the condition is "predetermined" which may vary in time. The "predetermined condition" may also vary in order and size as well. Therefore, claim 4 is indefinite.

The following limitations recited in the '101 patent Asserted Claims are indefinite in whole, in part or in combination, as summarized below:[32]

Table 5-E: Indefinite Terms under 35 U.S.C. § 112(2) the '101 Patent

Term	Relevant Claim(s)
"transfer"	1
"stream-delivered"	1
"predetermined condition"	4

[32] Listed claims also include all Asserted Claims dependent thereon, even if those claims are not individually listed.

b) Indefiniteness under 35 U.S.C. § 112, Second and Sixth Paragraphs as Improper Means-Plus-Function/ Step-Plus-Function Limitations[33]

Means-plus-function claim limitations and step-plus-function claim limitations "shall be construed to cover the corresponding structure, material, or acts described in the specification and equivalents thereof." 35 U.S.C. § 112, ¶ 6. Claims governed by 35 U.S.C. § 112, ¶ 6 are indefinite if "the claim term fails to recite sufficiently definite structure or else recites function without reciting sufficient structure for performing that function." *Williamson v. Citrix Online, LLC*, 792 F.3d 1339, 1349 (Fed. Cir. 2015) (en banc). To the extent certain of the claim elements in the Asserted Claims are governed by 35 U.S.C. § 112, ¶ 6, they lack sufficiently definite structure. For example, the Asserted Claims recite elements performing functions without sufficiently disclosing any structure capable of performing those functions.

An inadequate disclosure of a structure corresponding to the claimed function constitutes a violation of both paragraphs 2 and 6 of Section 112. *In Re Donaldson Co.*, 16 F.3d 1189, 1195 (Fed. Cir. 1994) (en banc) ("If an applicant fails to set forth an adequate disclosure, the applicant has in effect failed to particularly point out and distinctly claim the invention as required by the second paragraph of section 112."). Therefore, if a claim includes a means-plus-function limitation, failure to disclose adequate structure corresponding to the claimed function results in the claim being invalid for indefiniteness.

Whether the patent adequately sets forth structure corresponding to the function is ascertained from the perspective of a skilled artisan. *Intel Corp. v. VIA Techs., Inc.*, 319 F.3d 1357, 1365-66 (Fed. Cir. 2003). But the question is not whether a skilled artisan would be capable of

[33] The claim construction process has not yet started and Defendant's Contentions herein are not, and should in no way be seen as, admissions or adoptions as to any particular claim scope or construction. Defendant will provide its claim construction positions per the Third Amended Docket Control Order (D.I. 46). *See* Section II.B, *supra*.

implementing a structure to perform the function, but whether that person would understand the written description to disclose such a structure. *Biomedino, LLC v. Waters Techs. Corp.*, 490 F.3d 946, 953 (Fed. Cir. 2007). "Whether the disclosure would enable one of ordinary skill in the art to make and use the invention is not at issue here." *Aristocrat*, 512 F.3d at 1336 (noting that a § 112, ¶ 6 disclosure serves a very different purpose from enablement). The "consideration of the understanding of one skilled in the art in no way relieves the patentee of adequately disclosing sufficient structure in the specification. It is not enough for the patentee simply to state or later argue that persons of ordinary skill in the art would know what structures to use to accomplish the claimed function." *Id.* The proper inquiry is "to look at the *disclosure* of the patent and determine if one of skill in the art would have understood that *disclosure* to encompass software to perform the claimed function and been able to implement such a program, not simply whether one of skill in the art would have been able to write such a software program." *Id.* at 1337 (internal quotations omitted, emphasis in original).

A structure disclosed in the specification qualifies as "corresponding" only if the specification or prosecution history "clearly links or associates" that structure to the function recited in the claim. *Asyst Technologies, Inc. v. Empak, Inc.*, 268 F.3d 1364, 1370 (Fed. Cir. 2001) (internal citation omitted). Furthermore, the corresponding structure "must actually perform the recited function, not merely enable the pertinent structure to operate as intended." *Id.* at 1371.

To the extent section 112, paragraph 6 governs, various claim terms recite a function performed or result achieved without reciting particular structures for performing the function or achieving the result. Further, to the extent a skilled artisan would lack reasonable certainty as to whether any of the below claim terms do or do not invoke section 112, ¶ 6, that alone renders the

claim scope unclear. The specification of the ’891 patent does not inform one of ordinary skill in the art about the scope of the inventions with reasonable certainty.

To the extent section 112, ¶ 6 governs, for example, independent claim 1 and its dependent claims 2-5 are invalid under 35 U.S.C. § 112, ¶¶ 2 and 6 as to the “transfer control unit,” “list information transmission unit,” “search unit,” “digital contents data transmission processing unit,” and “return control unit” limitations which are all means-plus-function terms. Neither the claims nor the specification describe adequate structure, material, or acts corresponding to the recited function, and because these terms, when read in light of the specification delineating the patent, and the prosecution history, fails to inform, with reasonable certainty, those skilled in the art about the scope of the invention.

The specification fails to disclose any structure or an algorithm corresponding to the symbol judging, communicating judging, or data changing functions. To the extent section 112, ¶ 6 governs, for “transfer control unit,” the function is to “transfer and store part of held digital contents in the internal storage device to a network storage device,” with the “network storage device connected to the network and capable of storing data,” and when the “transfer control unit does not transfer, from the internal storage device to the network storage device, the digital contents that cannot be recovered if a network failure occurs during the transferring of the digital contents from the internal storage device to the network storage device,” but the specification fails to disclose any structure or algorithm that can accomplish those functions. ’101 patent at 11:25-34. To the extent section 112, ¶ 6 governs, for “list information transmission unit,” the function is to “respond to a list presentation request for the held digital contents of the server device for media from the network player by transmitting list information to the network player,” with “the list information listing the digital contents left in the internal storage device and the digital contents

transferred from the internal storage device to the network storage device and stored in the network storage device" and "the list information maintains a tree structure of the digital contents in the internal storage device before transferring the digital contents to the network storage device," but the specification fails to disclose any structure or algorithm that can accomplish those functions. '101 patent at 11:35-46. To the extent section 112, ¶ 6 governs, for "search unit," the function is to "respond to a data transmission request for the held digital contents from the network player by searching for a location where the held digital contents are currently stored," but the specification fails to disclose any structure or algorithm that can accomplish those functions. '101 patent at 11:47-50. To the extent section 112, ¶ 6 governs, for "digital contents data transmission processing unit," the function is to "allow the corresponding data in held digital contents to be stream-delivered from the network storage device to the network player, if the result of search shows the network storage device," but the specification fails to disclose any structure or algorithm that can accomplish those functions. '101 patent at 11:51-55.

To the extent section 112, ¶ 6 governs, for the same reason, independent method claim 7 is invalid under 35 U.S.C. § 112, ¶¶ 2 and 6 as to the "transferring and storing part of held digital contents," "responding to a list presentation request," "responding to a data transmission request for the held digital contents from the network player by searching," and "allowing the corresponding data in held digital contents" limitations which are all step-plus-function terms. Each of the step-plus-function terms are improper for method claim 7 for the same reasons the corresponding means-plus-function terms in claim 1 are improper. Neither the claims nor the specification describe adequate structure, material, or acts corresponding to the recited function, and because these terms, when read in light of the specification delineating the patent, and the

prosecution history, fails to inform, with reasonable certainty, those skilled in the art about the scope of the invention. *See* discussion above.

The following limitations recited in the '101 patent Asserted Claims are indefinite in whole, in part or in combination, as summarized below:[34]

Table 6-E: Indefinite Terms under 35 U.S.C. § 112(2), (6) for the '891 Patent as Improper Means-Plus-Function / Step-Plus-Function Terms

Term	Relevant Claim(s)
"a transfer control unit adapted to transfer and store part of held digital contents in the internal storage device to a network storage device, wherein the network storage device is connected to the network and is capable of storing data, and wherein said transfer control unit does not transfer, from the internal storage device to the network storage device, the digital contents that cannot be recovered if a network failure occurs during the transferring of the digital contents from the internal storage device to the network storage device"	1
"a list information transmission unit adapted to respond to a list presentation request for the held digital contents of the server device for media from the network player by transmitting list information to the network player, wherein the list information lists the digital contents left in the internal storage device and the digital contents transferred from the internal storage device to the network storage device and stored in the network storage device, and wherein the list information maintains a tree structure of the digital contents in the internal storage device before transferring the digital contents to the network storage device"	1
"a search unit adapted to respond to a data transmission request for the held digital contents from the network player by searching for a location where the held digital contents are currently stored"	1

[34] Listed claims also include all Asserted Claims dependent thereon, even if those claims are not individually listed.

"a digital contents data transmission processing unit adapted to allow the corresponding data in held digital contents to be stream-delivered from the network storage device to the network player, if the result of search shows the network storage device"	1
". . . .wherein said digital contents data transmission processing unit causes the network storage device to transmit the corresponding data to the server device for media, and then transmits the corresponding data received from the network storage device from the server device for media to the network player"	2
". . . . wherein said digital contents data transmission processing unit transmits the corresponding data and information for identifying the network storage device to the network player, and causes the network storage device to directly transmit the corresponding data to the network player"	3
"The server device for media according to claim 1, further comprising a return control unit adapted to cause the digital contents corresponding to a predetermined condition among the digital contents which have been transferred to the network storage device to be returned from the network storage device to the internal storage device"	4
". . . . wherein said list information transmission unit makes the list information to be transmitted to the network player include information for identifying whether each digital content is currently stored in the internal storage device or the network storage device in the display list of the network player"	5
"transferring and storing part of held digital contents in the internal storage device to a network storage device, wherein the network storage device is connected to the network and is capable of storing data, and wherein the digital contents that cannot be recovered if a network failure occurs during the transferring of the digital contents are not transferred from the internal storage device to the network storage device"	7

"responding to a list presentation request for the held digital contents of the server device for media from the network player by transmitting list information to the network player, wherein the list information lists the digital contents left in the internal storage device and the digital contents transferred from the internal storage device to the network storage device and stored in the network storage device, and wherein the list information maintains a tree structure of the digital contents in the internal storage device before transferring the digital contents to the network storage device"	7
"responding to a data transmission request for the held digital contents from the network player by searching for a location where the held digital contents are currently stored;"	7
"allowing the corresponding data in held digital contents to be stream-delivered from the network storage device to the network player, if the result of search shows the network storage device"	7

c) Lack of Enablement and/or Lack of Written Description

35 U.S.C. § 112, paragraph 1, includes an enablement requirement. *See* 35 U.S.C. § 112, ¶ 1 ("The specification shall contain a written description . . . of the manner and process of making and using [the invention] in such full, clear, concise and exact terms as to enable any person skilled in the art to which it pertains, or with which it is most nearly connected, to make and use the same.").

To satisfy the enablement requirement of 35 U.S.C § 112, ¶ 1, the disclosure "must teach those skilled in the art how to make and use the full scope of the claimed invention without 'undue experimentation.'" *Genentech, Inc. v. Novo Nordisk, A/S*, 108 F.3d 1361, 1365 (Fed. Cir. 1997) (citations omitted). Moreover, "[i]t is the specification, not the knowledge of one skilled in the art, that must supply the novel aspects of [the] invention in order to constitute adequate enablement."

Genentech, 108 F.3d at 1366. The Federal Circuit has enumerated several factors to consider in determining whether a disclosure would require "undue experimentation": (1) the quantity of experimentation necessary; (2) the amount of direction or guidance presented; (3) the presence or absence of working examples; (4) the nature of the invention; (5) the state of the prior art; (6) the relative skill of those in the art; (7) the predictability or unpredictability of the art; and (8) the breadth of the claims. *In re Wands*, 858 F.2d 731, 737 (Fed. Cir. 1988).

To satisfy the written description requirement, the description must "clearly allow persons of ordinary skill in the art to recognize that [the inventor] invented what is claimed." *Ariad Pharmaceuticals, Inc. v. Eli Lilly and Co.*, 598 F.3d 1336, 1351 (Fed. Cir. 2010) (internal citation omitted). In other words, the test for sufficiency is whether the disclosure of the application relied upon reasonably conveys to those skilled in the art that the inventor had possession of the claimed subject matter as of the filing date. *Id.* The test requires an objective inquiry into the four corners of the specification from the perspective of a person of ordinary skill in the art. Based on that inquiry, the specification must describe an invention understandable to that skilled artisan and show that the inventor actually invented the invention claimed. "Whether the written description requirement is satisfied is a fact-based inquiry that will depend on the nature of the claimed invention, and the knowledge of one skilled in the art at the time an invention is made and a patent application is filed." *Carnegie Mellon Univ. v. Hoffmann La Roche Inc.*, 541 F.3d 1115, 1122 (Fed. Cir. 2008). Actual "possession" or reduction to practice outside of the specification is not enough. Rather, as stated above, it is the specification itself that must demonstrate possession. A description that merely renders the invention obvious does not satisfy the requirement. *Lockwood v. Am. Airlines*, 107 F.3d 1565, 1571-72 (Fed. Cir. 1997).

All Asserted Claims of the ’101 patent are invalid for lack of enablement and/or lack written description because they do not contain an enabling or sufficient disclosure of the specific hardware structure, reference software, source code, and/or other specific details of the invention that would enable a person skilled in the art to practice the claimed invention without undue experimentation.[7]

For example, independent claim 1 fails to satisfy the requirements of 35 U.S.C. § 112(1) because the specification fails to provide an enabling disclosure of “transfer control unit” when the “transfer control unit does not transfer, from the internal storage device to the network storage device, the digital contents that cannot be recovered if a network failure occurs during the transferring of the digital contents from the internal storage device to the network storage device.” Therefore, the specification fails to provide a written description of using “transfer control unit” as recited in the above-listed claims or teach a person of ordinary skill how to make or use the same because it does not explain how that decision-making process works to “transfer” digital contents or not.

For example, independent claim 1 fails to satisfy the requirements of 35 U.S.C. § 112(1) because the specification fails to provide an enabling disclosure of “held digital contents to be stream-delivered” when the “digital contents data transmission processing unit adapted to allow the corresponding data in held digital contents to be stream-delivered from the network storage device to the network player, if the result of search shows the network storage device.” Therefore, the specification fails to provide a written description of using “held digital contents to be stream-delivered” as recited in the above-listed claims or teach a person of ordinary skill how to make or use the same because it does not explain how the digital contents are “stream-delivered.”

For example, dependent claim 4 fail to satisfy the requirements of 35 U.S.C. § 112(1) because the specification fails to provide an enabling disclosure of "predetermined condition" when the "a return control unit adapted to cause the digital contents corresponding to a predetermined condition among the digital contents which have been transferred to the network storage device to be returned from the network storage device to the internal storage device." Therefore, the specification fails to provide a written description of using "predetermined condition" as recited in the above-listed claims or teach a person of ordinary skill how to make or use the same because it does not explain the temporal, order, or size as to when the condition is "predetermined."

The following limitations recited in the '101 Patent Asserted Claims are indefinite in whole, in part or in combination, as summarized below:[35]

Table 7-E: Indefinite Terms under 35 U.S.C. § 112(1) for the '101 Patent

Term	Relevant Claim(s)
"transfer"	1
"stream-delivered"	1
"predetermined condition"	4

F. U.S. Patent No. 7,804,891

1. Alleged Priority Date

A "patent may only claim priority to an earlier application if the earlier application fulfills the requirements of § 112, first paragraph, which requires, in part, that the application 'shall contain a written description of the invention, and of the manner and process of making and using

[35] Listed claims also include all Asserted Claims dependent thereon, even if those claims are not individually listed.

it, in such full, clear, concise, and exact terms as to enable any person skilled in the art to which it pertains, or with which it is most nearly connected, to make and use the same.'" *Chiron Corp. v. Genentech, Inc.*, 363 F.3d 1247, 1253 (Fed. Cir. 2004). ACT has failed to establish that any Asserted Claim is entitled to a priority date based on the filing of any earlier application. Defendant reserves its right to identify additional bases for this contention in response to ACT's subsequent arguments and positions, any amendments that ACT makes to its own contentions, the Court's claim construction, or information uncovered during further discovery.

Defendant does not agree, and therefore disputes, that the Asserted Claims of the '891 patent are entitled to the priority date asserted by ACT. Additionally, ACT provides no contention nor any evidence in its infringement contentions demonstrating that the '891 patent was invented earlier than the effective filing date of its earliest foreign application, Japan Patent Application No. 2004-108399, filed March 31, 2004. *See* Infringement Contentions at 6. Thus, the '891 patent is not entitled to any date of invention earlier than the effective filing date of its earliest foreign application, which ACT alleges is March 31, 2004. Further, the '891 patent is not entitled to the claimed foreign priority date of March 31, 2004. The '891 patent's earliest foreign application lacks sufficient disclosure of the claims of the '891 patent to support the filing of the foreign application as the priority date of the '891 patent.

Defendant's disclosure of prior art is premised on the alleged priority date as identified in Plaintiff's Infringement Contentions. Defendant contends Plaintiff is not entitled to the alleged priority date and reserves the right to modify, amend, or supplement its invalidity contentions with additional prior art references if any Asserted Claim is shown to not be entitled to the respective alleged priority date. Defendant objects to ACT alleging or providing evidence of any earlier date of invention; all such evidence is fully within ACT's control and to the extent ACT claims an

earlier priority date, it needed to do so in its infringement contentions. To the extent ACT is able and permitted to assert an earlier date of invention for any of the Asserted Patents, Defendant may modify, amend, and/or supplement these Invalidity Contentions, including, but not limited to its identification and production of additional prior art.

2. General State of the Art at the Time of the Alleged Invention

At the time of invention of the ’891 patent, “[t]he telecommunications industry [was] one of the largest industries worldwide, with more than a trillion US dollars in annual revenues for services and equipment. (To put this in perspective, this number is comparable to the gross domestic product of many of the world’s richest countries, including France, Italy and the United Kingdom[, at the time]).” Xiaodong Wang and H. Vincent Poor, *Wireless Communication Systems: Advanced Techniques for Signal Reception* (June 2, 2002) at 14. Various technical specifications guided wireless communication systems across the world. These were known to a person of ordinary skill in the art and included, but are not limited to, the EIT/TIA IS-54-B Interim Standard for Cellular System Dual-Mode Mobile Station – Base Station Compatibility Standard, IS-136 (an evolution of IS-54), GSM (*e.g.*, the ETSI 300 581-3 and ETSI 1992 references), UMTS, and the “Personal Digital Cellular Telecommunication System RCR STD-27, Revision J” by the Association of Radio Industries and Businesses, May 30, 2002 (as noted in the in the background of the ’891 specification at 1:14-26).[36]

Wireless telecommunication “technologies [were] supported by a number of transmission and channel-assignment techniques, including time-division multiple-access (TDMA),

[36] On information and belief, Rev. L (amended Nov. 30, 2005) is representative of Rev. J (amended May 30, 20002) as it relates to the functionality relating to the claims of the ‘891 patent. Rev. J “[a]dd[ed] dual mode function for the PDC system and other cellular communication systems.” Association of Radio Industries and Businesses, Overview of ARIB Standards (STD-27), https://www.arib.or.jp/english/std tr/telecommunications/desc/std-27.html.

code-division multiple access (CDMA) and other spread-spectrum systems, orthogonal frequency-division multiplexing (OFDM) and other multi-carrier systems, and high-rate single-carrier systems.… To obtain maximal benefit from these transmission techniques, to exploit the diversity opportunities of the wireless channel, and to mitigate the impairments of the wireless channel, advanced receiver signal processing techniques [were] of interest." Xiaodong Wang and H. Vincent Poor, *Wireless Communication Systems: Advanced Techniques for Signal Reception* (June 2, 2002) at 15. 2G digital cellular networks (CDMA, TDMA,[37] and GSM[38]) were in use and the 3G standard was developing to unify mobile devices into one platform. Kumar, S. (2004) 'Mobile communications: global trends in the 21st century', Int. J. Mobile Communication, Vol. 2, No. 1, pp.67–86, at 67, 77. As of February 2003, there were 140 million US mobile users and 120 million total TDMA users. Kumar at 70.

As signals are transmitted and received they may be susceptible to errors so judging and managing communication quality is a common aspect of communications. "The fundamental problem of communication is that of reproducing at one point either exactly or approximately a message selected at another point." David J.C. MacKay, *Information Theory, Inference, and Learning Algorithms* 3 (Version 6.0, Cambridge Univ. Press 2003), hereinafter "MacKay" (quoting C.E. Shannon, *A Mathematical Theory of Communication*, The Bell System Technical Journal, Vol. 27, pp. 379–423, 623–656, July, October, 1948). When transmitting data over noisy communication channels there's a probability the received string of bits will not be identical to the

[37] The North American IS-54-B standard for digital cellular systems using TDMA was introduced in the 1990s. Kumar, S. (2004) 'Mobile communications: global trends in the 21st century', Int. J. Mobile Communication, Vol. 2, No. 1, pp.67-86, at 67, 77.

[38] The European Technical Specification Institute (ETSI), a European Standards Organization (ESO) concerning wireless communications and founding partner of 3 GPP (Third Generation Partnership Project) developed the Global System for Mobile Communications (GSM). ETSI, About Us, https://www.etsi.org/about#:~:text=About%20ETSI,enabled%20systems%2C%20applications%20and%20services.

transmitted string of bits. MacKay at 3-4. The fields of information theory and coding theory concern "detect[ing] and correct[ing] the errors introduced by the channel" to "turn noisy channels into reliable communication channels." MacKay at 4-5. Channel coding concerns "the redundant encoding of information so as to be able to detect and correct communication errors." McKay at 192.

Numerous error-correcting codes were known for error detection and correction at the time of invention, including but not limited to the following: repetition codes, block codes (such as the (7,4) Hamming code), cyclic codes, sparse graph codes, stream codes, Lempe-Ziv codes, arithmetic codes, linear codes, convolutional codes, concatenated codes, turbo codes, block codes, low-density parity-check codes, repeat-accumulate codes. *See* MacKay at 5-21, 122-23, 177-190, 206-227, 557-573, 574-581, 582-587. The LDPC (Low-Density Parity Check) codes for detecting and correcting errors were first introduced in 1960 by Robert G. Gallager. ACT-GOOGLE00007901; Robert G. Gallager, Low Density Parity Check Codes (D.Sc Thesis, MIT 1960); Robert G. Gallager, Low Density Parity-Check Codes (1963). At the time of the invention, the Gaussian channel was a popular model of real-input, real-output channels for telecommunications. MacKay at 177. "[T]he best known codes for communicating over Gaussian channels" at the time of invention included convolutional codes, concatenated convolutional codes like Reed-Solomon codes, turbo codes, and low-density parity check codes. MacKay at 186-87.

The claimed invention of the '891 patent is directed to judging the communication quality of a transmission channel and only transmitting voice data in good condition. '891 patent at 1:43-48. Managing communication quality in wireless communications was a common goal at the time of invention. The prior art referenced above and identified below (including the "References Cited" on the face of the '891 patent and within the specification itself) may provide additional

background and context pertinent to the teachings, and interpretation of, the prior art referenced by the claim charts. As the ’891 patent admits, error detection and correction methods were known in the art at the time the application leading to the ’891 patent was filed. *See, e.g.*, 1:31-35, 2:1-7, 13:7-14. Additional methods for communication judgment and management (*e.g.*, via error detection, error detection and correction, and error detection and concealment) were known at the time the ’891 application was filed are explained in MacKay’s textbook, as overviewed above. As demonstrated by the prior art and specification of the ’891 patent, foundational technology for communication quality judgment and management included adaptive filtering, frame-loss concealment, and noise suppression.

In addition to the prior art admitted by the ’891 patent, the references that anticipate and/or render obvious one or more Asserted Claims are identified in the claim charts of Exhibits F01-F32 (collectively, “Appendix F”) and in Section III.F.3, *infra*.

3. Disclosure of Prior Art References (P.R. 3-3(a))

Pursuant to P.R. 3-3(a), Defendant identifies at least the following prior art now known to it to anticipate and/or render obvious one or more of the Asserted Claims of the ’891 patent, either expressly, implicitly, or inherently as understood by a person having ordinary skill in the art.

a) Prior Art Patents, Patent Applications, And Publications

In addition to the prior art admitted by the ’891 patent, the following patents, patent applications, and publications are prior art to the ’891 patent under at least 35 U.S.C. §§ 102(a), (b), (e), and/or (g), and anticipate and/or render obvious the Asserted Claims of the ’891 patent:

Table 1-F: Prior Art Patents and Patent Applications for the ’891 Patent

Patent or Patent Application No.	Country of Origin	Date of Issue (if Issued Patent)	Exhibit[39]	Anticipates	Renders Obvious
U.S. Pub. No. 2003/0101386 to Brouet, "Method for Detecting Errors in a Real-Time Data Entity Comprising at Least Two Bit Protions [sic] Having Different Relevance and Corresponding Receiver" ("Brouet")	United States	Pub. May 29, 2003	F01	X	X
U.S. Pat. No. 5,255,343 to Su, "Method for Detecting and Masking Bad Frames in Coded Speech Signals" ("Su")	United States	Oct. 19, 1993	F02	X	X
U.S. Pat. No. 5,918,204 to Tsurumaru, "Speech Frame Disabling Circuitry for Protection Against Burst Errors of Interleaved TDMA Frames" ("Tsurumaru")	United States	June 29, 1999	F03	X	X
WO /03019887 to Krüger "Quality Inspection Device and Method for Data Packets Transmitted via a Radio Channel" ("Kruger")	Denmark	Pub. March 6, 2003	F04	X	X
U.S. Pat. No. 5,901,186 to Jamal,	United States	May 14, 1999	F05	X	X

[39] Exhibit numbers have only been listed for primary references. Additional prior art references that disclose and render obvious certain elements are described in Sections III.F.4-.5 *infra*, as well as the discussion of the general state of the art in Section III.F.2, *supra*.

"Bad Frame Detection" ("Jamal")					
U.S. Pat. No. 6,703,948 to Kupferschmidt, "Method for Decoding Digital Audio Data" ("Kupferschmidt")	United States	Mar. 9, 2004	F06		X
U.S. Pat. No. 5,555,257 to Dent, "Cellular/Satellite Communications System with Improved Frequency Re-use" ("Dent")	United States	Sep. 10, 1996	F07		X
U.S. Pat. No. 6,061,823 to Nara, "Error Correcting/Decoding Apparatus and Error Correcting/Decoding Method" ("Nara")	United States	May 9, 2000	F08	X	X
U.S. Pat. No. 6,687,670 to Sydänmaa, "Error Concealment in Digital Audio Receiver" ("Sydänmaa")	United States	Feb. 3, 2004	F09	X	X
U.S. Pat. No. 5,432,778 to Minde, "Method and an Arrangement for Frame Detection Quality Estimation in the Receiver of a Radio Communication System" ("Minde")	United States	Jul. 11, 1995	F10		X
U.S. Pat. No. 6,519,740 to Mårtensson, "Bit Detection Method in a Radio Communications	United States	Feb. 11, 2003	F11		X

System" ("Mårtensson")					
U.S. Pat. No. 7,168,031 to Burkert, "Method for Channel Decoding a Data Stream Containing Useful Data and Redundant Data, Device for Channel Decoding, Computer-readable Storage Medium and Computer Program Element" ("Burkert")	United States	Jan. 23, 2007	F12		X
U.S. Pat. No. 7,213,197 to Jacobsen "Adaptive Bit Loading with Low Density Parity Check Forward Error Correction" ("Jacobsen '197")	United States	May 1, 2007	F32	X	X

Table 2-F: Prior Art Publications for the '891 Patent

Title	Date of Publication	Author/ Publisher	Exhibit[40]	Anticipates	Renders Obvious
IS-54-B	April 1992	Electronic Industries Alliance (EIA)and Telecommunications Industry Association (TIA)	F13	X	X
Advanced Vocode r Idle Slot Exploitation for TIA IS-136 Standard ("Yeh Thesis")	July 14, 1998	Ernest Nanjung Yeh, MIT Libraries	F14	X	X
Half rate speech Part 3: Substitution and muting of lost frames for half rate	November 1995	European Telecommunications Standards Institute (ETSI)	F15		X

[40] Exhibit numbers have only been listed for primary references. Additional prior art references that disclose and render obvious certain elements are described in Sections III.F.4-.5 *infra*, as well as the discussion of the general state of the art in Section III.F.2, *supra*.

speech traffic channels (“ETSI 300 581-3”)					
Substitution and muting of lost frames for full rate speech traffic channels (“ETSI 1992”)	February 1992	European Telecommunications Standards Institute (ETSI) and Global System for Mobile Communications (GSM)	F16		X
ETSI TS 125 212 V5.7.0 (2003-12) (“TS 25.212”)	December 2003	European Telecommunications Standards Institute (ETSI)	F17	X	X
David J.C. MacKay, Information Theory, Inference, and Learning Algorithms (Version 6.0, Cambridge Univ. Press 2003) (“MacKay”)	2003	Cambridge Univ. Press	F18		X
RCR STD 27	2003	Association of Radio Industries and Businesses	F19	X	X
Texas Instruments, Wireless and Telecommunications Products Data Book (“TI Data Book”)	1996	Texas Instruments	F21	X	X
Balaji Srinivasan, IS-54 Digital Cellular Modem Implementation on the TMS320C5x, Application Report (“Srinivasan”)	1994	Texas Instruments	F21		X
John D. Crockett et al., IS-54 Simulation Application Report (“Crockett”)	1994	Texas Instruments	F21	X	X
B.I. (Raj) Pawate et al., Digital Cellular Phone: A Functional Analysis Application Report	1994	Texas Instruments	F30	X	X

(October 1994) ("Pawate")					
Eric Jacobsen IEEE Presentation, "LDPC FEC for IEEE 802.11n Applications" (Power Point Presentation), presented to IEEE 802.11 plenary session, Task Group n, on Nov. 10, 2003, slides 1-35 ("Jacobsen IEEE Presentation")	Nov. 10, 2003	Eric Jacobsen of Intel Labs	F31	X	X

b) Prior Art Systems

Numerous systems are prior art to the '891 patent under at least 35 U.S.C. §§ 102(a), (b), (e), and/or (g), and anticipate and/or render obvious the Asserted Claims of the '891 patent. These systems also include physical implementations of prior art patents, patent applications, and publications identified herein that were known, made, used, sold, offered for sale, or imported into this country prior to the effective filing dates of the '891 patent, including those identified above and discussed in the sections below. Defendant's reference to a particular product, device, or software program in these contentions should be interpreted as a reference to the system itself as well as to any corresponding patents, publications, or product literature relating to the cited system. Although Defendant's investigation continues, information available to date indicates that numerous systems, including the '891 Prior Art Systems cited in Appendix F, were (1) known or used in this country before the alleged invention of the claimed subject matter of the Asserted Claims, (2) in public use and/or on sale in this country more than one year before the priority dates of the '891 patent, and/or (3) invented by another who did not abandon, suppress, or conceal, before the alleged invention of the claimed subject matter of the Asserted Claims.

In addition Defendant may rely on systems or other embodiments of the subject matter described in each of the references described above. Each of the references cited in support of the above systems may also be prior art individually under 35 U.S.C. §§ 102(a), (b), (e), and/or (g).

The claimed communication quality judging device, communication quality judging method, and computer program of the independent and dependent claims of the ’891 patent are “applicable to wireless communication system[s].” ’891 patent at 15:28-32. Upon information and belief, numerous mobile devices and wireless communication baseband chipsets and processors are prior art systems for the ’891 patent, including the following:

- Analog Devices IS-54/IS-136 IF Baseband Chipset Prior Art System, which upon information and belief was publicly known in 1997. *See, e.g.*, Analog Devices, Analog Dialogue Vol. 31, No. 2, 1997 at 22 (referencing IS-54/IS-136 IF baseband chipset communication product brief), Analog Devices IS-54/IS-136 IF Baseband CHIPSET.

- Texas Instruments IS-54/IS-136 Chipset Prior Art System, which upon information and belief was publicly known in 1996. *See, e.g.*, Texas Instruments, Wireless and Telecommunications Products Data Book 1-19, 1-29, 1-30, 8-2 - 8-161 1996.

- Nokia 2120 Plus Prior Art System, which upon information and belief was known in 1996, and compatible with IS-54B. *See, e.g.*, https://www.nokiamuseum.net/nokia-2120-plus—1996.

- Nokia 6650 Prior Art System, which upon information and belief was introduced in 2003, and complied with GSM / UMTS, including ETSI TS 125 212 V5.7.0.

GSM Arena, *Nokia* 6650. *See, e.g.*, https://www.gsmarena.com/nokia_6650-348.php.

- Motorola MicroTAC Prior Art System, which upon information and belief, is compatible with GSM and TDMA/AMPS and was publicly available in 1994. *See, e.g.*, https://en.wikipedia.org/wiki/Motorola_MicroTAC.

- Motorola StarTAC Prior Art System, which upon information and belief, is compatible with AMPS/TDMA, cdmaOne, and GSM, which upon information and belief was publicly available in 1996. *See, e.g.*, https://en.wikipedia.org/wiki/Motorola_MicroTAC.

- NTT DoCoMo N2051 Prior Art System, which upon information and belief was publicly known by consumers in the United States at least by July 3, 2003. NTT DoCoMo, Inc., Annual Report (Form 20-F) (July 3, 2003).

- Prior Art Systems Implementing IS-54-B, which upon information and belief was publicly known in April 1992. *See, e.g.*, https://en.wikipedia.org/wiki/Digital_AMPS#:~:text=AMPS%20also%20had%20a%20poor,a%20help%20in%20preventing%20fraud.

- Prior Art Systems Implementing TS 25.212, which upon information and belief was publicly known in 2003. *See, e.g.*, https://www.etsi.org/deliver/etsi_ts/125200125299/125212/05.07.00_60/ts_125212v050700p.pdf.

- Prior Art Systems Implementing RCR STD 27, which upon information and belief were known by consumers in the United States at least by May 15, 2003. *See, e.g.*, https://www.arib.or.jp/english/std_tr/telecommunications/desc/std-27.html.

As discovery is ongoing, Defendant continues to investigate these items and may amend or supplement these contentions to include additional information or documents regarding such products and/or systems. Defendant may rely on the individual references within each system, either alone or in combination, as prior art separate and apart from their description for the system. Defendant may rely on the individual systems, either alone or in combination, as prior art. Each of the individual references within each system qualifies as prior art to the '891 patent under at least 35 U.S.C. §§ 102 and/or 103 (pre-AIA). The Asserted Claims of the '891 patent are anticipated by the individual references expressly and/or inherently or rendered obvious, either alone or in combination with other references, as set forth in the Defendant's system art charts identified below. It would have been obvious for a person of ordinary skill to combine these individual references since they are related to the '891 patent and prior art systems at the time of invention.

Table 3-F: Prior Art Systems and Inventions for the '891 Patent

Name of System or Invention	Date of Sale/ Offer for Sale / Public Use / Known by Others, Upon Information and Belief	Exhibit	Anticipates	Renders Obvious
Analog Devices IS-54/IS-136 IF Baseband Chipset Prior Art System	1997	F20	X	X
Texas Instruments IS-54/IS-136 Prior Art System Chipset	1998	F21	X	X

Nokia 2120 Plus Prior Art System	1996	F22	X	X
Nokia 6650 Prior Art System	2003	F23	X	X
Motorola Micro TAC Prior Art System	1994	F24	X	X
Motorola StarTAC Prior Art System	1996	F25	X	X
NTT DoCoMo N2051 Prior Art System	July 3, 2003	F26	X	X
Prior Art Systems Implementing IS-54-B	April 1992	F27	X	X
Prior Art Systems Implementing TS 25.212	December 2003	F28	X	X
Prior Art Systems Implementing RCR STD 27	May 15, 2003	F29	X	X

4. Anticipation and Obviousness Under P.R. 3-3(b) and (c)

35 U.S.C. § 102(a) provides that "[a] person shall be entitled to a patent unless . . . the invention was known or used by others in this country, or patented or described in a printed publication in this or a foreign country, before the invention thereof by the applicant for patent . . . ." To be anticipatory, a reference must describe, either expressly or inherently, each and every limitation and enable one of skill in the art to practice an embodiment of the claimed invention without undue experimentation. *Stored Value Solutions, Inc. v. Card Activation Technologies, Inc.*, 2012 WL 6097674, at *8 (Fed. Cir. 2012). A reference may anticipate inherently if a claim limitation that is not expressly disclosed "is necessarily present, or inherent, in the single anticipating reference." *In re Aoyama*, 656 F.3d 1293, 1337 (Fed. Cir. 2011) (quoting *Schering Corp. v. Geneva Pharm., Inc.*, 339 F.3d 1373, 1377 (Fed. Cir. 2003)); *Akamai Technologies, Inc. v. Cable & Wireless Internet Services, Inc.*, 344 F.3d 1186, 1195 (Fed. Cir. 2003) (finding hierarchical DNS servers inherent in any Internet system).

Each of the Asserted Claims of the ’891 patent is anticipated and/or rendered obvious by prior art. Pursuant to P.R. 3–3(b), Defendant identifies the prior art references that anticipate or render obvious an Asserted Claim in the claim charts of Appendix F, which are hereby incorporated by reference as if fully set forth herein, and in Section III.F.3.

Pursuant to P.R. 3-3(c), the claim charts of Appendix F, provide an identification where these prior art references teach or suggest each and every element of the Asserted Claims of the ’891 patent. For each reference or combination of references suggested by each chart, Defendant indicates whether the prior art renders the claim anticipated and/or obvious pursuant to P.R. 3–3(b). In addition to contending that the Asserted Claims are invalid in view of the prior art references cited in the claim charts of Appendix F and admitted prior art, Defendant further contend that the Asserted Claims are invalid as anticipated and/or obvious under U.S.C. §§ 102(a) and/or (b) in view of public knowledge and uses and/or offers for sale of products and services related to the subject matter of the cited references. Reference to a particular circuitry, software program, device or product in the claim charts of Appendix F should be interpreted as a reference to the product itself and any corresponding patents, publications, or product literature cited in Appendix F that relates to the cited circuitry, software program, device, or product. In addition, Defendant may rely on other documents or things that have not yet been located to support its contentions regarding such prior art circuit(s), software program(s), device(s) or product(s) that are referenced in the charts.

Defendant incorporates by reference, as if set forth fully herein, all prior art cited during the prosecution of the ’891 patent. In addition, Defendant identifies and hereby incorporates by reference as if set forth fully herein the prior art references that anticipate or render obvious an

asserted claim as described in a future reexaminations or *inter partes* reviews of the ’891 patent, if any, that a requestor may file or the PTO may grant.

Defendant further identifies and hereby incorporates by reference as if set forth fully herein the prior art references and invalidity contentions as described in any other lawsuits wherein invalidity contentions have been, or will be, provided regarding the ’891 patent, any foreign counterparts, or any parent or child patent of the ’891 patent. *Advanced Coding Techs. v. LG Elecs.*, No. 2:22-cv-00501-JRG (E.D. Tex. July 18, 2024), D.I. No. 148-3 (Ex. B Samsung’s May 30, 2024 Amended Invalidity and Subject Matter Eligibility Contentions); *Advanced Coding Techs. v. Apple, Inc.*, No. 2:22-cv-00572-JRG (E.D. Tex.), D.I. 42 (Third Amended Docket Control Order).

Defendant may use any and all portions of the publication, related publications, commercial embodiments of the publication, and other evidence that is discovered in these lawsuits to demonstrate and/or evidence the components, functionality, and capabilities of the devices and systems disclosed in the references charted.

Where Defendant identifies a particular figure in a prior art reference, the identification should be understood to encompass the caption and description of the figure, as well as any text relating to the figure in addition to the figure itself. Similarly, where an identified portion of text refers to a figure or other material, the identification should be understood to include the referenced figure or other material as well. It should be recognized that a person of ordinary skill in the art would generally read a prior art reference as a whole and in the context of other publications, literature, and general knowledge in the field. To understand and interpret any specific statement or disclosure in a prior art reference, a person of ordinary skill in the art would rely upon other information including other publications and general scientific or engineering knowledge. Defendant therefore may rely upon other unidentified portions of the prior art references and on

other publications and expert testimony to provide context and to aid understanding and interpretation of the identified portions.

Defendant may also rely upon other portions of the prior art references, other publications, and the testimony of experts to establish that the alleged inventions would have been obvious to a person of ordinary skill in the art, including the basis of modifying or combining certain cited references. To the extent any limitation is deemed not to be met by an item of prior art, then any purported differences are such that the claimed subject matter as a whole would have been obvious to one skilled in the art at the time of the alleged invention, in view of the state of the art and knowledge of those skilled in the art. To the extent that an element of an Asserted Claim is not anticipated, the claim is rendered obvious by combination with one or more other prior art references identified in Appendix F and the admitted prior art.

5. Obviousness Under P.R. 3-3(b) and (c)

a) Prior Art Rendering Asserted Claims Obvious

In general, a claimed invention is unpatentable under 35 U.S.C. § 103(a) if "the differences between the subject matter sought to be patented and the prior art are such that the subject matter as a whole would have been obvious at the time the invention was made to a person having ordinary skill in the art." 35 U.S.C. § 103(a); *Graham v. John Deere Co.*, 383 U.S. 1, 13-14 (1966). The ultimate determination of whether an invention is or is not obvious is a legal conclusion based on underlying factual inquiries including: "(1) the scope and content of the prior art; (2) the level of ordinary skill in the art; (3) the differences between the claimed invention and the prior art; and (4) objective evidence of nonobviousness." *Miles Labs., Inc. v. Shandon, Inc.*, 997 F.2d 870, 877 (Fed. Cir. 1993). *See also Graham*, 383 U.S. at 17-18.

A claimed invention is obvious when a skilled artisan would have been motivated to combine the teaching of the prior art references to achieve the claimed invention, and the skilled

artesian would have had a reasonable expectation of success in doing so. *See, e.g., Unigene Labs., Inc. v. Apotex, Inc.*, 655 F.3d 1352, 1360 (Fed. Cir. 2011). "Any need or problem known in the field of endeavor at the time of the invention and addressed by the patent can provide a reason for combining the elements in the manner claimed." *See KSR Int'l Co. v. Teleflex Inc.*, 550 U.S. 398, 420 (2007). While an analysis of any teaching, suggestion, or motivation to combine elements from different prior art references is useful in an obviousness analysis, such analyses should not be rigidly applied; the overall inquiry must be expansive and flexible, and must include the common sense and ordinary creativity of a person having ordinary skill in the art as part of the analysis. *Id.* at 419-21.

Pursuant to P.R. 3–3(b), Defendant identifies in Appendix F and in the sections below the prior art references that render obvious under 35 U.S.C. §103(a) the Asserted Claims of the '891 patent and include an identification of combinations showing the obviousness of the Asserted Claims in view of the prior art. Moreover, to the extent ACT contends that an element is not disclosed in any one of the references identified in Appendix F, such reference may be combined with one or more of the other references identified in Appendix F and/or the admitted prior art for such element, thereby rendering the claim invalid as obvious. Defendant may combine any prior art reference identified for the '891 patent with any other prior art reference identified for the '891 patent to assert obviousness. Even if a prior art reference does not expressly disclose all limitations as arranged or combined in the same manner as an asserted claim, a skilled artisan reading the reference would at once envisage the claimed arrangement or combination. *See, e.g., Kennametal Inc. v. Ingersoll Cutting Tool Co.*, 780 F.3d 1376 (Fed. Cir. 2015).

To the extent a finder of fact determines that a limitation of any of the Asserted Claims of the '891 patent is not disclosed by one of the references or products and systems identified above

pursuant to P.R. 3–3(a), the claims are nevertheless unpatentable as obvious because they contain nothing that constitutes patentable innovation. To the extent a finder of fact determines that a limitation of any of the Asserted Claims of the ’891 patent is not anticipated, no asserted claim goes beyond combining familiar elements according to known methods to achieve predictable results or does more than choose between clear alternatives known to those of ordinary skill in the art.

b) Prosecution History

During prosecution of the application that resulted in the ’891 patent, the examiner issued one rejection, rejecting the independent claims (1, 9, and 10) and objecting to the dependent claims (2-8). Office Action for Patent Application No. 10/594,985 issued March 16, 2010 (“3/16/10 Office Action”). Claims 1,9 were rejected under 35 U.S.C. 103(a) as being unpatentable over Minde et al. US 5,432,778 in view of Mårtensson et al. US 6,519,740. 3/16/10 Office Action at 3-6. Claim 10 was rejected under 35 U.S.C. 103(a) as being unpatentable over Minde et al. US 5,432,778 in view of Mårtensson et al. US 6,519,740 in further view of Burkert et al. US 7,168,031. 3/16/10 Office Action at 7-8.

In response, the applicant amended the independent claims to include allowable subject matter of allowed dependent claim 2. Amendment for Patent Application No. 10/594,985 submitted June 4, 20210 (“6/4/10 Amendment”) at 3, 5-6, 7-8 (“In response and in accordance with the statement of allowed subject matter (*Id.*), independent claim 1 has been amended to include the allowable features of dependent claim 2, and independent claims 9 and 10 have been amended to include features similar to those previously recited in dependent claim 2. Therefore, independent claims 1, 9 and 10, as amended, recite allowable subject matter, and the above-referenced rejections are believed to be moot.” at 7-8).

Thus, by failing to object or otherwise respond to the examiner's read on the rejected claims, the applicant admitted that the following **bolded** claim limitations of independent claims 1 and 8 are rendered obvious under §103(a) by Minde et al. US 5,432,778 in view of Mårtensson et al. US 6,519,740, and that the following **bolded** claim limitations of independent claim 9 are rendered obvious §103(a) by Minde et al. US 5,432,778 in view of Mårtensson et al. US 6,519,740 in further view of Burkert et al. US 7,168,031:

> **1. A communication quality judging device comprising:**
>
> **a symbol judging means for obtaining a baseband signal representative of a sequence of multilevel symbols and judging the symbol represented by the baseband signal;**
>
> **a communication quality judging means for judging communication quality of a transmission channel over which the baseband signal has been transmitted, based on content of the symbol judged by the symbol judging means; and**
>
> a data changing means for, if the communication quality judged by the communication quality judging means does not satisfy a predetermined condition, making a predetermined change to the data to be transmitted represented by the symbol used in the judgment,
>
> **wherein at least a portion of a bit string is distinguished as a protected portion, the bit string constituting data to be transmitted represented by the sequence of symbols, and at least a portion of the symbol that belongs to the sequence of symbols contains a bit belonging to the protected portion and a redundant bit having a predetermined value, and**
>
> **wherein the communication quality judging means identifies the number of redundant bits having the predetermined value or the number of redundant bits missing the predetermined value among the redundant bits contained in the symbol that contains a bit belonging to the protected portion, and judges the communication quality of the transmission channel based on the identified result.**
>
> **8. A communication quality judging method, the method comprising the steps of: obtaining a baseband signal representative of a sequence of multilevel symbols and judging the symbol represented by the baseband signal;**
>
> **judging communication quality of a transmission channel over which the baseband signal has been transmitted, based on content of the symbol judged in the symbol judging step; and**
>
> changing data if the communication quality judged in the communication quality judging step does not satisfy a predetermined condition, to make a predetermined change to the data to be transmitted represented by the symbol used in the judgment,

wherein at least a portion of a bit string is distinguished as a protected portion, the bit string constituting data to be transmitted represented by the sequence of symbols, and at least a portion of the symbol that belongs to the sequence of symbols contains a bit belonging to the protected portion and a redundant bit having a predetermined value, and

wherein, in the communication quality judging step, the number of redundant bits having the predetermined value or the number of redundant bits missing the predetermined value is identified among the redundant bits contained in the symbol that contains a bit belonging to the protected portion, and the communication quality of the transmission channel is judged based on the identified result.

9. A computer program causing a computer to execute the steps of:

obtaining a baseband signal representative of a sequence of multilevel symbols and judging the symbol represented by the baseband signal;

judging communication quality of a transmission channel over which the baseband signal has been transmitted, based on content of the symbol judged in the symbol judging step; and

changing data if the communication quality judged in the communication quality judging step does not satisfy a predetermined condition, to make a predetermined change to the data to be transmitted represented by the symbol used in the judgment,

wherein at least a portion of a bit string is distinguished as a protected portion, the bit string constituting data to be transmitted represented by the sequence of symbols, and at least a portion of the symbol that belongs to the sequence of symbols contains a bit belonging to the protected portion and a redundant bit having a predetermined value, and

wherein, in the communication quality judging step, the number of redundant bits having the predetermined value or the number of redundant bits missing the predetermined value is identified among the redundant bits contained in the symbol that contains a bit belonging to the protected portion, and the communication quality of the transmission channel is judged based on the identified result.

c) Teaching, Suggestion, or Motivation to Combine References

The U.S. Supreme Court decision in *KSR International Co. v. Teleflex Inc.*, 127 S. Ct. 1727, 1739 (2007) ("*KSR*") held that a claimed invention can be obvious even if there is no explicit, written teaching, suggestion, or motivation for combining the prior art to produce that invention. Accordingly, no showing of a specific motivation to combine prior art is required to combine the references disclosed in the attached charts, as each combination of art would have no unexpected

results, and, at most, would simply represent a known alternative to one of ordinary skill in the art. *See KSR*, 127 S. Ct. at 1739-40 (rejecting the Federal Circuit's "rigid" application of the teaching, suggestion, or motivation to combine test, and instead espousing an "expansive and flexible" approach). A person of ordinary skill in the art is "a person of ordinary creativity, not an automaton" and "in many cases a person of ordinary skill in the art will be able to fit the teachings of multiple patents together like pieces of a puzzle." *Id.* at 1742. "In determining whether the subject matter of a patent claim is obvious, neither the particular motivation nor the avowed purpose of the patentee controls. What matters is the objective reach of the claim." *Id.* at 1741-42. "Under the correct analysis, any need or problem known in the field of endeavor at the time of invention and addressed by the patent can provide a reason for combining the elements in the manner claimed." *Id.* at 1742. In particular, the Supreme Court emphasized the principle that "[t]he combination of familiar elements according to known methods is likely to be obvious when it does no more than yield predictable results." *Id.* at 1739. A key inquiry is whether the "improvement is more than the predictable use of prior art elements according to their established functions." *Id.* at 1740.

The Federal Circuit recently reiterated that "the motivation to modify a prior art reference to arrive at the claimed invention need not be the same motivation that the patentee had. Requiring the motivation to modify to be the same motivation as that of the patent inventor has no basis in obviousness doctrine." *Honeywell Int'l Inc. v. 3G Licensing, S.A.*, No. 23-1354, slip op. at 14 (Fed. Cir. 2025) (cleaned up) (holding "[t]he fact that the inventor of the [challenged] patent may have had a different or even novel motivation that led them to swap the last two digits of the [prior art] reference is irrelevant"). In *Honeywell*, the Federal Circuit emphasized that "obviousness does not require that a particular combination must be the preferred, or the most desirable, combination

described in the prior art in order to provide motivation for the current invention. Rather, the question is whether there is something in the prior art as a whole to suggest the desirability, and thus the obviousness of the claimed invention." *Id.* at 17-18 (cleaned up). There, the Federal Circuit held the PTAB committed legal error by "failing to recognize that the claimed modification needed only to be desirable in light of the prior art and not the 'best' or 'preferred' approach" and that the prior art "reference's disclosed goal of 'giv[ing] significant extra protection to the [most significant bit], provided the motivation for the claimed modification.'" *Id.* at 18 (internal citation omitted).

"Additionally, 'universal' motivations known in a particular field to improve technology provide 'a motivation to combine prior art references *even absent any hint of suggestion* in the references themselves.'" *Intel Corp. v. PACT XPP Schweiz AG*, 61 F.4th 1373, 1379 (Fed. Cir. 2023) (quoting *Intel Corp. v. Qualcomm Inc.*, 21 F.4th 784, 797-99 (Fed. Cir. 2021)) (original emphasis). Thus, motivations to combine, as well as the general state of the art, may be found in a variety of places including, but not limited to, in the references defined above, and the specification of the Asserted Patents.

The rationale to combine or modify prior art references is significantly stronger when the references seek to solve the same problem, come from the same field, and correspond well. *In re Inland Steel Co.*, 265 F.3d 1354, 1362 (Fed. Cir. 2001). The Federal Circuit allowed two references to be combined as invalidating art when "[the prior art] focus[es] on the same problem that the . . . patent addresses . . . Moreover, both [prior art references] come from the same field . . . Finally, the solutions to the identified problems found in the two references correspond well." *Id.* at 1362.

In *KSR*, the Supreme Court emphasized that inventions arising from ordinary innovation, ordinary skill, or common sense should not be patentable. *See KSR Int'l Co. v. Teleflex Inc.*, 550 U.S. 398 (2007). Although a patent challenger is not required to show that one of ordinary skill in

the art would have had a specific motivation to combine prior art references, such a showing may be helpful to the obviousness analysis. *Id.* at 418; *see also id.* at 402. Exemplary rationales that may support a conclusion of obviousness include:

- Combining various claimed elements known in the prior art according to known methods to yield a predictable result;
- Making a simple substitution of one or more known elements for another to obtain a predictable result;
- Using a known technique to improve a similar device or method in the same way;
- Applying a known technique to a known device or method ready for improvement to yield a predictable result;
- Choosing from a finite number of identified, predictable solutions with a reasonable expectation of success, such that the solution was one which was "obvious to try";
- A known work in one field of endeavor prompting variations of it for use either in the same field or a different field based on design incentives or other market forces in which the variations were predictable to one of ordinary skill in the art; and
- A teaching, suggestion, or motivation in the prior art that would have led one of ordinary skill in the art to modify the prior art reference or to combine the teachings of various prior art references to arrive at the claimed invention.

Although Defendant contends that no specific motivation to combine is necessary for the references cited in the attached exhibits, consistent with the Patent Rules, Defendant hereby identifies additional motivations and reasons to combine the cited art. These exemplary discussions regarding obviousness are illustrative, and not intended to be exhaustive. To the extent ACT challenges a combination of prior art with respect to a particular element, Defendant reserves all rights to supplement these Contentions to further specify the motivation to combine the prior art. Defendant may rely on cited or uncited portions of the prior art, other documents, and/or expert testimony to establish that a person of ordinary skill in the art would have been motivated to modify or combine the prior art so as to render the claims invalid as obvious.

First, one of skill in the art would have been motivated to combine one or more of: (i) the admitted prior art; and/or (ii) the references identified in Appendix F, with one another, because they all relate to common objectives and subject matter. The references share commonalities in terms of their general subject matter, as well as the types of equipment, products, and/or approaches they describe. Moreover, a person of ordinary skill would have been motivated to combine the above prior art based on the nature of the problem to be solved, the teachings of the prior art, and the knowledge of persons of ordinary skill in the art. The identified prior art addresses the same or similar technical issues and suggests the same or similar solutions to those issues. Furthermore, because the prior art references concern communication quality, common industry knowledge supplied a reason to combine the below references with one another. The prior art references seek various solutions to improve the quality of data transmission. For example, the prior art has a common objective and subject matter, relating to the same technical issue of judging and managing communication quality (*e.g.*, through error detection, error detection and error correction, and/or error detection and concealment). *See, e.g.*, Brouet at [0012-13]; Su at Abstract, 1-2; Tsurumaru at 2:39-3:3; Krüger at 1; Jamal at Abstract, 2:11-42; Kupferschmidt at Abstract; Dent at Abstract, 46-48; Nara at Abstract; Sydänmaa at Abstract; Minde at Abstract; Mårtensson at 2:58-67; Burkert at 5:26-54; IS-54B at 74-75, 102-103, 159-162; Yeh Thesis at Abstract; ETSI 300 581-3 at 1-9; ETSI 1992; TS 25.212, MacKay at 1-5; Jacobsen ’197 at 3:29-36 *see also* Analog Devices IS-54/IS-136 IF Baseband Chipset Prior Art System, Texas Instruments IS-54/IS-136 Chipset Prior Art System, Nokia 2120 Plus Prior Art System, Nokia 6650 Prior Art System, Motorola MicroTAC Prior Art System, Motorola StarTAC Prior Art System, NTT DoCoMo N2051 Prior Art System, Prior Art Systems Implementing IS-54-B, Prior Art Systems

Implementing TS 25.212, Prior Art Systems Implementing RCR STD 27, RCR STD 27, TI Data Book, Srinivasan at 6, Crockett, Pawate, Jacobsen IEEE Presentation at slides 3-16, 21.

Second, a person of ordinary skill in the art would have understood that the references identified in Appendix F explicitly or implicitly reference other prior art that share common authors or inventors, were published in the same journals, presented at the same conferences, were presented as proposals to standards working groups, and/or were developed at common companies, schools, or organizations, all of which would motivate one of skill in the art to combine them. For example, persons of ordinary skill of the art gathered at the IEEE International Symposium on Information Theory in Sorrento, Italy June 25-30, 2000, where presentations covered numerous error-correcting and error-detecting coding methods. *See* IEEE International Symposium on Information Theory at 109 (Michael B. Pursely and John M. Shea, *Channel Quality Estimation with Channel Error Counts for Adaptive Signaling in Wireless Communications*, in IEEE International Symposium on Information Theory at 109 (Sorrento, Italy June 26, 2000)). Additionally, POSAs collaborate to develop various standards which implement communication quality judgment and management as referred to or implemented by the prior art. *See e.g.*, Brouet, Su, Tsurumaru, Krüger, Jamal, Kupferschmidt at 1:11-34, Dent, Nara, Sydänmaa, Minde, Mårtensson, Burkert, IS-54B, Yeh Thesis, ETSI 300 581-3, ETSI 1992, TS 25.212, MacKay, Analog Devices IS-54/IS-136 IF Baseband Chipset Prior Art System, Texas Instruments IS-54/IS-136 Chipset Prior Art System, Nokia 2120 Plus Prior Art System, Nokia 6650 Prior Art System, Motorola MicroTAC Prior Art System, Motorola StarTAC Prior Art System, NTT DoCoMo N2051 Prior Art System, Prior Art Systems Implementing IS-54-B, Prior Art Systems Implementing TS 25.212, Prior Art Systems Implementing RCR STD 27, RCR STD 27, TI Data Book, Srinivasan, Crockett, Pawate, Jacobsen ’197, Jacobsen IEEE Presentation. Design

incentives and other market forces would have prompted those combinations and modifications. "When there is a design or market pressure to solve a problem and there are a finite number of identified, predictable solutions, a person of ordinary skill has good reason to pursue known options within his or her technical grasp." *KSR Int'l, 127S. Ct.* at 1742. Moreover, some pieces of prior art refer to or discuss other pieces of prior art, illustrating the close technical relationship among the prior art. To the extent any piece of prior art refers to or discusses other pieces of prior art, either expressly or inherently, it would have been obvious to combine those pieces of prior art for that reason.

Third, the references identified in Appendix F and the admitted prior art are also directed to similar subject matter within that field. Additionally, any products, devices, or processes described in the references existed and/or were invented before or during the period in which the claimed inventions were developed, providing further motivation to combine them. For example, techniques for judging and managing communication quality (*e.g.*, through error detection, error detection and error correction, and/or error detection and concealment) were known by the priority date of the '891 Patent. *See, e.g.*, Brouet at [0012-13]; Su at Abstract, 1-2; Tsurumaru at 2:39-3:3; Krüger at 1; Jamal at Abstract, 2:11-42; Kupferschmidt at Abstract; Dent at Abstract, 46-48; Nara at Abstract; Sydänmaa at Abstract; Minde at Abstract; Mårtensson at 2:58-67; Burkert at 5:26-54; IS-54B at 74-75, 102-103, 159-162; Yeh Thesis at Abstract; ETSI 300 581-3 at 1-9; ETSI 1992; TS 25.212, MacKay at 1-5, Analog Devices IS-54/IS-136 IF Baseband Chipset Prior Art System, Texas Instruments IS-54/IS-136 Chipset Prior Art System, Nokia 2120 Plus Prior Art System, Nokia 6650 Prior Art System, Motorola MicroTAC Prior Art System, Motorola StarTAC Prior Art System, NTT DoCoMo N2051 Prior Art System, Prior Art Systems Implementing IS-54-B, Prior Art Systems Implementing TS 25.212, Prior Art Systems Implementing RCR STD 27, RCR

STD 27, TI Data Book, Srinivasan at 6, Crockett, Pawate, Jacobsen ’197 at 3:29-36, Jacobsen IEEE Presentation at slides 3-16, 21.

Fourth, one or more combinations of the admitted prior art and prior art references identified in Appendix F, pursuant to P.R. 3–3(b), would have been obvious because these references would have been combined with one another using: known methods to yield predictable results; known techniques in the same way; a simple substitution of one known, equivalent element for another to obtain predictable results; and/or a teaching, suggestion, or motivation in the prior art generally. The Asserted Claims are obvious, in part, because they merely arrange old elements, with each performing the same function that had been known, to perform and yield no more than what one of ordinary skill would expect from such an arrangement. Because there were a finite number of predictable solutions in the art of delivering content in response to a request, it would have been obvious to a person of ordinary skill in the art to pursue the known options. The identified prior art references merely use those familiar elements for their primary or well-known purposes and in a manner well within the ordinary level of skill in the art. Accordingly, common sense and the knowledge of the prior art render the Asserted Claims invalid as well.

For example, the ’891 Patent’s Background Art section admits that error checking techniques were known in the art for judging communication quality by, for example, detecting and correcting errors. *See, e.g.*, ’891 patent at 1:15-2:17. The Background also admits the prior art comprised well known frequency modulation circuits for frequency modulating waves and demodulation circuits for detecting the frequency modulated waves to restore baseband signals. ’891 patent at 8:9-15, 9:5-12. In addition, it would have been obvious to try combining the prior art references identified above because there were only a finite number of predictable solutions and/or because known work in one field of endeavor prompted variations based on predictable

[redacted]

design incentives and/or market forces either in the same field or a different one. For example, there are a finite number of approaches for encoding and decoding data. As of the priority date of the ’891 patent, a POSA would have been very familiar with basic elements of the ’891 Patent’s claims of obtaining signals, judging communication quality, and changing data. The combination of prior art references identified above would have been obvious because the combinations represent known potential options with a reasonable expectation of success. *See*, *e.g.*, Brouet at [0012-13]; Su at Abstract, 1-2; Tsurumaru at 2:39-3:3; Krüger at 1; Jamal at Abstract, 2:11-42; Kupferschmidt at Abstract; Dent at Abstract, 46-48; Nara at Abstract; Sydänmaa at Abstract; Minde at Abstract; Mårtensson at 2:58-67; Burkert at 5:26-54; IS-54B at 74-75, 102-103, 159-162; Yeh Thesis at Abstract; ETSI 300 581-3 at 1-9; ETSI 1992; TS 25.212, MacKay at 1-5, Analog Devices IS-54/IS-136 IF Baseband Chipset Prior Art System, Texas Instruments IS-54/IS-136 Chipset Prior Art System, Nokia 2120 Plus Prior Art System, Nokia 6650 Prior Art System, Motorola MicroTAC Prior Art System, Motorola StarTAC Prior Art System, NTT DoCoMo N2051 Prior Art System, Prior Art Systems Implementing IS-54-B, Prior Art Systems Implementing TS 25.212, Prior Art Systems Implementing RCR STD 27, RCR STD 27, TI Data Book, Srinivasan at 6, Crockett, Pawate, Jacobsen ’197 at 3:29-36, Jacobsen IEEE Presentation at slides 3-16, 21.

Fifth, additional evidence that there would have been a motivation to combine the prior art references identified in Appendix F and/or the admitted prior art, includes, for example, the interrelated teachings of multiple prior art references; the effects of demands known to the design community or present in the marketplace; the existence of a known problem for which there was an obvious solution encompassed by the Asserted Claims; the existence of a known need or problem in the field of the endeavor at the time of the invention(s); and the background knowledge

that would have been possessed by a person having ordinary skill in the art. For example, prior to the alleged priority date of the ’891 patent, error detection, error correction, and error concealment methods were well-known. *See e.g.*, MacKay; IS-54B, TS 25.212 A skilled artisan seeking, for example, to improve communication quality judgment and management would have sought to use error detection, error correction, and error concealment methods, including as disclosed in the prior art. *See, e.g.*, Brouet at [0012-13]; Su at Abstract, 1-2; Tsurumaru at 2:39-3:3; Krüger at 1; Jamal at Abstract, 2:11-42; Kupferschmidt at Abstract; Dent at Abstract, 46-48; Nara at Abstract; Sydänmaa at Abstract; Minde at Abstract; Mårtensson at 2:58-67; Burkert at 5:26-54; IS-54B at 74-75, 102-103, 159-162; Yeh Thesis at Abstract; ETSI 300 581-3 at 1-9; ETSI 1992; TS 25.212, MacKay at 1-5, Analog Devices IS-54/IS-136 IF Baseband Chipset Prior Art System, Texas Instruments IS-54/IS-136 Chipset Prior Art System, Nokia 2120 Plus Prior Art System, Nokia 6650 Prior Art System, Motorola MicroTAC Prior Art System, Motorola StarTAC Prior Art System, NTT DoCoMo N2051 Prior Art System, Prior Art Systems Implementing IS-54-B, Prior Art Systems Implementing TS 25.212, Prior Art Systems Implementing RCR STD 27, RCR STD 27, TI Data Book, Srinivasan at 6, Crockett, Pawate, Jacobsen ’197 at 3:29-36, Jacobsen IEEE Presentation at slides 3-16, 21.

Sixth, a person of ordinary skill at the time of the alleged invention had reason to combine or modify one or more of the references identified in Appendix F and/or the admitted prior art, with other prior art references in Appendix F and/or the admitted prior art, in light of the knowledge of a person of ordinary skill in the art at the time of the invention and information in the prior art cited herein. For example, the references in Appendix F and the admitted prior art all generally relate to communication quality judgment and management. Thus, they are all directed to features within the same field and one of ordinary skill in the art at the time of the alleged invention would

have been motivated to look to these teachings in the field and combine any of these known technologies. *See, e.g.*, Brouet at [0012-13]; Su at Abstract, 1-2; Tsurumaru at 2:39-3:3; Krüger at 1; Jamal at Abstract, 2:11-42; Kupferschmidt at Abstract; Dent at Abstract, 46-48; Nara at Abstract; Sydänmaa at Abstract; Minde at Abstract; Mårtensson at 2:58-67; Burkert at 5:26-54; IS-54B at 74-75, 102-103, 159-162; Yeh Thesis at Abstract; ETSI 300 581-3 at 1-9; ETSI 1992; TS 25.212, MacKay at 1-5, Analog Devices IS-54/IS-136 IF Baseband Chipset Prior Art System, Texas Instruments IS-54/IS-136 Chipset Prior Art System, Nokia 2120 Plus Prior Art System, Nokia 6650 Prior Art System, Motorola MicroTAC Prior Art System, Motorola StarTAC Prior Art System, NTT DoCoMo N2051 Prior Art System, Prior Art Systems Implementing IS-54-B, Prior Art Systems Implementing TS 25.212, Prior Art Systems Implementing RCR STD 27, RCR STD 27, TI Data Book, Srinivasan at 6, Crockett, Pawate, Jacobsen ’197 at 3:29-36, Jacobsen IEEE Presentation at slides 3-16, 21.

Seventh, many of the references in Appendix F and/or the admitted prior art, have common design features for judging and managing communication quality (*e.g.*, through error detection, error detection and error correction, and/or error detection and concealment). One of ordinary skill in the art would have been motivated and found it obvious to combine these references, with a reasonable expectation of success, to improve communication quality judgement and management. *See, e.g.*, *Brouet* at [0012-13]; Su at Abstract, 1-2; Tsurumaru at 2:39-3:3; Krüger at 1; Jamal at Abstract, 2:11-42; Kupferschmidt at Abstract; Dent at Abstract, 46-48; Nara at Abstract; Sydänmaa at Abstract; Minde at Abstract; Mårtensson at 2:58-67; Burkert at 5:26-54; IS-54B at 74-75, 102-103, 159-162; Yeh Thesis at Abstract; ETSI 300 581-3 at 1-9; ETSI 1992; TS 25.212, MacKay at 1-5, Analog Devices IS-54/IS-136 IF Baseband Chipset Prior Art System, Texas Instruments IS-54/IS-136 Chipset Prior Art System, Nokia 2120 Plus Prior Art System, Nokia

6650 Prior Art System, Motorola MicroTAC Prior Art System, Motorola StarTAC Prior Art System, NTT DoCoMo N2051 Prior Art System, Prior Art Systems Implementing IS-54-B, Prior Art Systems Implementing TS 25.212, Prior Art Systems Implementing RCR STD 27, RCR STD 27, TI Data Book, Srinivasan at 6, Crockett, Pawate, Jacobsen '197 at 3:29-36, Jacobsen IEEE Presentation at slides 3-16, 21.

In addition to the exemplary motivations, suggestions, or reasons to combine described above, Defendant identifies additional obviousness combinations and motivations to combine in the sections below. The exemplary motivations, suggestions, or reasons to combine described above and below are not exclusive or exhaustive, and should not be interpreted as indicating that any Asserted Claim is not already anticipated under 35 U.S.C. § 102. Defendant may identify further examples as the case proceeds. In addition, Defendant provides additional reasons to combine various disclosures below.

The below provides several exemplary combinations and motivations for combining the references. These combinations are only exemplary.

(i) Symbol Judging Limitations

Independent claims 1, 8, and 9 recite symbol judging limitations that were known in the art. Cl. 1 ("a symbol judging means for obtaining a baseband signal representative of a sequence of multilevel symbols and judging the symbol represented by the baseband signal"), 8 and 9 ("judging communication quality of a transmission channel over which the baseband signal has been transmitted, based on content of the symbol judged in the symbol judging step"). As the '891 patent admits, modulators and demodulators were well known in the art. 8:9-10 ("[t]he modulator unit T5 is composed of a well known frequency modulation circuit"), 9:5-7 ("[t]he demodulator unit R2 is composed of a well known detection circuit for detecting frequency modulated waves"). And "the modulated waves may represent in any manner a baseband signal generated by the

baseband signal generating unit T4, and therefore, may be phase shift keying (PSK) modulated waves." '891 patent at 14:34-38; *see also id.* 14:30-34 (saying the waves may have Gaussian characteristics rather than Root Nyquist).

According to the '891 patent, the various functional units responsible for, *e.g.*, demodulating, symbol judging, communication quality judging, voice data restoring, "may be composed of a processor, a memory that stores a program executed by the processor, and the like." '891 patent at 9:10-12; *see also id.* at 9:13-17. Some or all of these functionalities may be implemented by a single processor. *See id.* 9:17-25. Demodulation concerns transforming carrier wave information into bits (*see, e.g.*, Renesas, Glossary of Communication Terms 19 (1996); Cahners, The Mobile Glossary 8 (2002)) and the references identified in Appendix F share common equipment, *e.g.*, processors for processing data and/or programs for execution on a processor. *See e.g.*, Brouet, Su, Tsurumaru, Krüger, Jamal, Kupferschmidt, Dent, Nara, Sydänmaa, Minde, Mårtensson, Burkert, IS-54B, Yeh Thesis, ETSI 300 581-3, ETSI 1992, TS 25.212, MacKay, Analog Devices IS-54/IS-136 IF Baseband Chipset Prior Art System, Texas Instruments IS-54/IS-136 Chipset Prior Art System, Nokia 2120 Plus Prior Art System, Nokia 6650 Prior Art System, Motorola MicroTAC Prior Art System, Motorola StarTAC Prior Art System, NTT DoCoMo N2051 Prior Art System, Prior Art Systems Implementing IS-54-B, Prior Art Systems Implementing TS 25.212, Prior Art Systems Implementing RCR STD 27, RCR STD 27, TI Data Book, Srinivasan, Crockett, Pawate, Jacobsen '197 at 3:29-36, 4:34-56 Jacobsen IEEE Presentation at slides 4-8.

Additionally, the '891 patent describes using Nyquist characteristics to judge the baseband signal. *See, e.g.*, '891 patent at 9:50-55. Several of the references identified in Appendix F reference use Nyquist principles. *See, e.g.*, Dent at 15:32-42; MacKay at 178, IS-54-B at 22; RCR

STD 27 at 21-23; *see also* Prior Art Systems Implementing IS-54-B, Prior Art Systems Implementing RCR STD 27. Nyquist principles derive from theories introduced by Harry Nyquist about a century ago. *See* C.E. Shannon, *A Mathematical Theory of Communication*, The Bell System Technical Journal, Vol. 27, pp. 379–423, 623–656, July, October, 1948 (citing Nyquist, H., "Certain Factors Affecting Telegraph Speed," Bell System Technical Journal, April 1924, p. 324; "Certain Topics in Telegraph Transmission Theory," A.I.E.E. Trans., v. 47, April 1928, p. 617). A POSA would have knowledge of Nyquist principles and would have been motivated to combine them with the processors for processing data and/or programs for execution on a processor, along with the disclosures in Dent, MacKay, IS-54-B, Prior Art Systems Implementing IS-54-B, RCR STD 27, and Prior Art Systems Implementing RCR STD 27, to judge and manage communication quality. *See e.g.*, Brouet, Su, Tsurumaru, Krüger, Jamal, Kupferschmidt, Nara, Sydänmaa, Minde, Mårtensson, Burkert, IS-54B, Yeh Thesis, ETSI 300 581-3, ETSI 1992, TS 25.212, Analog Devices IS-54/IS-136 IF Baseband Chipset Prior Art System, Texas Instruments IS-54/IS-136 Chipset Prior Art System, Nokia 2120 Plus Prior Art System, Nokia 6650 Prior Art System, Motorola MicroTAC Prior Art System, Motorola StarTAC Prior Art System, NTT DoCoMo N2051 Prior Art System, Prior Art Systems Implementing IS-54-B, Prior Art Systems Implementing TS 25.212, Prior Art Systems Implementing RCR STD 27, RCR STD 27, TI Data Book, Srinivasan, Crockett, Pawate, Jacobsen '197, Jacobsen IEEE Presentation.

A POSA would have been motivated to use any of the processors disclosed in the references identified in Appendix F to implement various known methods of processing data to transmit and receive signals and judge the contents of those signals. *See e.g.*, Brouet, Su, Tsurumaru, Krüger, Jamal, Kupferschmidt at 4:36-52, Dent, Nara, Sydänmaa, Minde, Mårtensson, Burkert, IS-54B, Yeh Thesis, ETSI 300 581-3, ETSI 1992, TS 25.212, MacKay, Analog Devices

IS-54/IS-136 IF Baseband Chipset Prior Art System, Texas Instruments IS-54/IS-136 Chipset Prior Art System, Nokia 2120 Plus Prior Art System, Nokia 6650 Prior Art System, Motorola MicroTAC Prior Art System, Motorola StarTAC Prior Art System, NTT DoCoMo N2051 Prior Art System, Prior Art Systems Implementing IS-54-B, Prior Art Systems Implementing TS 25.212, Prior Art Systems Implementing RCR STD 27, RCR STD 27, TI Data Book, Srinivasan, Crockett, Pawate, Jacobsen '197 at 3:29-36, 4:34-56 Jacobsen IEEE Presentation at slides 4-8. Furthermore, the POSA would have had even greater motivation to combine references identified in Appendix F because they include a similar objective of judging and managing community quality (*e.g.*, through error detection, error detection and error correction, and/or error detection and concealment). *See*, *e.g.*, Brouet at [0012-13]; Su at Abstract, 1-2; Tsurumaru at 2:39-3:3; Krüger at 1; Jamal at Abstract, 2:11-42; Kupferschmidt at Abstract; Dent at Abstract, 46-48; Nara at Abstract; Sydänmaa at Abstract; Minde at Abstract; Mårtensson at 2:58-67; Burkert at 5:26-54; IS-54B at 74-75, 102-103, 159-162; Yeh Thesis at Abstract; ETSI 300 581-3 at 1-9; ETSI 1992; TS 25.212, MacKay at 1-5, Analog Devices IS-54/IS-136 IF Baseband Chipset Prior Art System, Texas Instruments IS-54/IS-136 Chipset Prior Art System, Nokia 2120 Plus Prior Art System, Nokia 6650 Prior Art System, Motorola MicroTAC Prior Art System, Motorola StarTAC Prior Art System, NTT DoCoMo N2051 Prior Art System, Prior Art Systems Implementing IS-54-B, Prior Art Systems Implementing TS 25.212, Prior Art Systems Implementing RCR STD 27, RCR STD 27, TI Data Book, Srinivasan at 6, Crockett, Pawate, Jacobsen '197 at 3:29-36, Jacobsen IEEE Presentation at slides 3-16, 21.

(ii) Data Changing Limitations

Independent claims 1, 8, and 9 and dependent claims 2-6 recite limitations related to changing data, as **bolded** below:

1. A communication quality judging device comprising:

a symbol judging means for obtaining a baseband signal representative of a sequence of multilevel symbols and judging the symbol represented by the baseband signal;

a communication quality judging means for judging communication quality of a transmission channel over which the baseband signal has been transmitted, based on content of the symbol judged by the symbol judging means; and

a data changing means for, if the communication quality judged by the communication quality judging means does not satisfy a predetermined condition, making a predetermined change to the data to be transmitted represented by the symbol used in the judgment,

wherein at least a portion of a bit string is distinguished as a protected portion, the bit string constituting data to be transmitted represented by the sequence of symbols, and at least a portion of the symbol that belongs to the sequence of symbols contains a bit belonging to the protected portion and a redundant bit having a predetermined value, and

wherein the communication quality judging means identifies the number of redundant bits having the predetermined value or the number of redundant bits missing the predetermined value among the redundant bits contained in the symbol that contains a bit belonging to the protected portion, and judges the communication quality of the transmission channel based on the identified result.

2. The communication quality judging device according to claim 1, **wherein the data changing means comprises means for externally obtaining a parameter that defines at least a portion of the condition.**

3. The communication quality judging device according to claim 1 or 2, **wherein the predetermined change includes a process of substantially destroying the data to be transmitted represented by the symbol used to judge that the communication quality does not satisfy a predetermined condition.**

4. The communication quality judging device according to claim 1 or 2, **wherein the predetermined change includes a process of replacing the data to be transmitted represented by the symbol used to judge that the communication quality does not satisfy a predetermined condition, with previous data represented by a symbol previously obtained by the symbol judging means.**

6. The communication quality judging device according to claim 1 or 2, **wherein the data to be transmitted is composed of data representative of strength of a variable, and the predetermined change includes an attenuating process of changing the data to be transmitted represented by the symbol used to judge that the communication quality does not satisfy a predetermined condition, to a data equivalent in which the variable represented by the data is attenuated.**

8. A communication quality judging method, the method comprising the steps of: obtaining a baseband signal representative of a sequence of multilevel symbols and judging the symbol represented by the baseband signal;

judging communication quality of a transmission channel over which the baseband signal has been transmitted, based on content of the symbol judged in the symbol judging step; and

changing data if the communication quality judged in the communication quality judging step does not satisfy a predetermined condition, to make a predetermined change to the data to be transmitted represented by the symbol used in the judgment,

wherein at least a portion of a bit string is distinguished as a protected portion, the bit string constituting data to be transmitted represented by the sequence of symbols, and at least a portion of the symbol that belongs to the sequence of symbols contains a bit belonging to the protected portion and a redundant bit having a predetermined value, and

wherein, in the communication quality judging step, the number of redundant bits having the predetermined value or the number of redundant bits missing the predetermined value is identified among the redundant bits contained in the symbol that contains a bit belonging to the protected portion, and the communication quality of the transmission channel is judged based on the identified result.

9. A computer program causing a computer to execute the steps of:

obtaining a baseband signal representative of a sequence of multilevel symbols and judging the symbol represented by the baseband signal;

judging communication quality of a transmission channel over which the baseband signal has been transmitted, based on content of the symbol judged in the symbol judging step; and

changing data if the communication quality judged in the communication quality judging step does not satisfy a predetermined condition, to make a predetermined change to the data to be transmitted represented by the symbol used in the judgment,

wherein at least a portion of a bit string is distinguished as a protected portion, the bit string constituting data to be transmitted represented by the sequence of symbols, and at least a portion of the symbol that belongs to the sequence of symbols contains a bit belonging to the protected portion and a redundant bit having a predetermined value, and

wherein, in the communication quality judging step, the number of redundant bits having the predetermined value or the number of redundant bits missing the predetermined value is identified among the redundant bits contained in the symbol that contains a bit belonging to the protected portion, and the communication quality of the transmission channel is judged based on the identified result.

According to the ’891 specification, a communication quality judging unit “performs a bad frame masking process on the data depending on the presence of an error. . .” 10:47-48; *see also* Abstract, 12:11-19, 12:49-50, 13:32-35, 13:53-56. For example, the communication quality

judgment unit may destroy or substantially destroy the data "such that it represents a silent state." '891 patent at 11:30-34.

Bad frame masking processes were known in the art at the time the application for the '891 patent was filed and within the knowledge of a POSA. *See, e.g.*, B.I. (Rak) Pawate, *Digital Cellular Phone: A Functional Analysis Application Report*, Texas Instruments (Oct. 1994) (explaining bad-frame masking strategy); TI Data Book; Srinivasan; Crockett. For example, the EIT/TIA IS-54-B Interim Standard for Cellular System Dual-Mode Mobile Station – Base Station Compatibility Standard discloses a bad frame masking process using a state machine to prevent the degradation of speech quality when an error is detected. IS-54-B at 74-75. IS-54-B defines "[a CRC] process in which a desired sequence of bits is encoded in a prescribed manner to enable detection and correction of bit errors." *Id.* at 2. Depending on whether an error is detected and the state of the machine, the received decoded speech data is either used, replaced with previous data, attenuated or muted. *Id.* The RCR STD 27 also discloses a bad frame masking process. *See, e.g.*, RCR STD 27 at 1143, 1190-1199; Systems Implementing RCR STD 27. Other standards disclose similar frame substitution and muting processes using state machines. *See, e.g.*, ETSI 1992 at 5-7; ETSI 300 581-3 at 8-10.

IS-54-B was known to a person of ordinary skill in the art and "contain[s] information deemed to be of technical value to the industry." IS-54-B at Notice. The "technical requirements [of IS-54-B] form a compatibility standard for cellular mobile telecommunications systems. Their purpose is to ensure that a mobile station can obtain service in any cellular system manufactured according to [the] standard." *Id.* at Preface. A POSA would have been motivated to combine the bad frame masking process in IS-54-B, and its other disclosures, with other communication quality judging and managing methods (*e.g.*, error detection/error correction/error concealments

methods). IS-136 is an evolution of IS-54, and both are TDMA (Time Division Multiple Access) systems. Several prior art references refer to IS-54, IS-136, or TDMA. *See, e.g.*, Dent at 41:14; Jamal at 3:10, Su at 2:41-44 (specifically teaching an "improved error detection and bad frame masking technique which can be implemented with the requirements of the digital cellular standard [IS-54]"), Yeh Thesis at 53 (the "proposed ADVISE [(Advanced Vocoder Idle Slot Exploitation for TIA IS-136 Standard)] implementations are backward-compatible, so that old handsets without ADVISE support can continue to operate"), Minde at Abstract ("A method and an arrangement for quality estimation when detecting an information frame, for instance a speech frame transmitted in a radio communication system in accordance with time division multiple access (TDMA)"), Mårtensson at 6:10-17 (referencing TDMA), Burkert (citing TDMA publication), Tsurumaru at 1:37-39, Brouet at [0008]; Analog Devices IS-54/IS-136 IF Baseband Chipset Prior Art System, Texas Instruments IS-54/IS-136 Chipset Prior Art System, Nokia 2120 Plus Prior Art System, Nokia 6650 Prior Art System, Motorola MicroTAC Prior Art System, Motorola StarTAC Prior Art System, Prior Art Systems Implementing IS-54-B, Prior Art Systems Implementing TS 25.212, Prior Art Systems. Common communication quality judgment and management methods (*e.g.*, error detection, error detection and correction, error detection and concealment) used by communication systems to manage communication quality used similar techniques as those provided by IS-54, IS-136, and TDMA. *See, e.g.*, Krüger at 1-2, Nara at 1:6-11, Sydänmaa at 4:49-53, 3GPP TS 25.212 version 5.7.0 Release 5 at 13-14; Nokia 2120 Plus Prior Art System, Nokia 6650 Prior Art System, Motorola MicroTAC Prior Art System, Motorola StarTAC Prior Art System, NTT DoCoMo N2051 Prior Art System, Jacobsen '197, Jacobsen IEEE Presentation.

Additionally, the European Technical Specification Institute (ETSI), a European Standards Organization (ESO) concerning wireless communications and founding partner of 3GPP (Third

Generation Partnership Project), which developed the Global System for Mobile Communications (GSM), provides methods for substituting and muting frames. ETSI 300 581-3 at 9-10, ETSI 1992 at 3-5. The ETSI 300 581-3 and ETSI 1992 references are part of GSM. 3GPP TS 25.212 version 5.7.0 Release 5 is part of the UMTS system standard, which essentially is an evolution of GSM, and concerns error detection and correction. TS 25.212 version 5.7.0 at 9. Krüger's and Mårtensson's specifications reference GSM. *See, e.g.*, Krüger at 2, Mårtensson at Abstract ("the present invention may be used in speech encoding in the GSM mobile communications systems"). Even where prior art references do not expressly reference ETSI/3GPP standards or GSM, their methods were known in the art and a POSA would have been motivated to combine to manage communication quality.

Determining whether a frame is bad requires a judgment in communication quality and substituting, replacing, muting, or attenuating bad frames are techniques for managing communication quality that were known to a POSA and which a POSA would have been motivated to combine with other techniques for judging and managing communication quality to improve quality. *See, e.g.*, Brouet at [0012-13]; Su at Abstract, 1-2; Tsurumaru at 2:39-3:3; Krüger at 1; Jamal at Abstract, 2:11-42; Kupferschmidt at Abstract; Dent at Abstract, 46-48; Nara at Abstract; Sydänmaa at Abstract; Minde at Abstract; Mårtensson at 2:58-67; Burkert at 5:26-54; IS-54B at 74-75, 102-103, 159-162; Yeh Thesis at Abstract; ETSI 300 581-3 at 1-9; ETSI 1992; TS 25.212, MacKay at 1-5, Analog Devices IS-54/IS-136 IF Baseband Chipset Prior Art System, Texas Instruments IS-54/IS-136 Chipset Prior Art System, Nokia 2120 Plus Prior Art System, Nokia 6650 Prior Art System, Motorola MicroTAC Prior Art System, Motorola StarTAC Prior Art System, NTT DoCoMo N2051 Prior Art System, Prior Art Systems Implementing IS-54-B, Prior

Art Systems Implementing TS 25.212, Prior Art Systems Implementing RCR STD 27, RCR STD 27, TI Data Book, Srinivasan, Crockett, Pawate, Jacobsen ’197, Jacobsen IEEE Presentation.

(iii) “wherein at least a portion of a bit string is distinguished as a protected portion”

Independent claims 1 and 8-9 of the ’891 patent and their corresponding dependent claims recite limitations directed to a “protected portion” of a bit string. The organization of speech information bits in digital cellular systems, such as TDMA and GSM, with bit portions with various levels of protection was known in the art (*e.g.*, dividing bits into various classes). *See*, *e.g.*, Su at 1:29-31, 1:31-48, 2:61-63, 3:29-52, 4:66-27; Brouet at [0007-10]; Krüger at 2; Jamal at 2:61-3:13, 2:11-42; Dent at 18:3-26, 46-48; Sydänmaa at 9:16-10:63; Minde at 3:25-55; Yeh Thesis at 9-10, 18-22, 53; Crockett at 1,6; Pawate at 5, 6, 8, 11; IS-54-B at 60-50; Prior Art Systems Implementing IS-54-B; Analog Devices IS-54/IS-136 IF Baseband Chipset Prior Art System; Texas Instruments IS-54/IS-136 Chipset Prior Art System; Nokia 2120 Plus Prior Art System; Motorola MicroTAC Prior Art System; Motorola StarTAC Prior Art System; NTT DoCoMo N2051 Prior Art System; *see also* MacKay at 579 (disclosing unequal protection of bits). PDC also distinguishes between protected and unprotected bits. *See*, *e.g.*, RCR STD 27 at 1136-1140, 1152-55; *see also* Prior Art Systems Implementing RCR STD 27. Additionally, methods of using redundant information to protect bits were known in the art. *See*, *e.g.*, Kupferschmidt at 3:30-36; Nara at 1:14-24; Tsurumaru 3:4-12; TS 25.212 at 9-14, 70-72; Prior Art Systems Implementing TS 25.212; Nokia 6650 Prior Art System; Burkert at Abstract, 7:6-10; Mårtensson at 3:44-4:6, Jacobsen ’197 at 3:29-36, Jacobsen IEEE Presentation at slides 3-16, 21.

Distinguishing a portion of a bit string as a protected portion would have been obvious to a POSA given the prevalence in doing so in the various methods of judging and managing communication quality (*e.g.*, error detection, error detection and error correction, and error

concealment). *See, e.g.*, Su at 1:29-31, 1:31-48, 2:61-63, 3:29-52, 4:66-27; Brouet at [0007-10]; Krüger at 2; Jamal at 2:61-3:13, 2:11-42; Dent at 18:3-26, 46-48; Sydänmaa at 9:16-10:63; Minde at 3:25-55; Yeh Thesis at 9-10, 18-22, 53; Crockett at 1,6; Pawate at 5, 6, 8, 11; IS-54-B at 60-50; Prior Art Systems Implementing IS-54-B; Analog Devices IS-54/IS-136 IF Baseband Chipset Prior Art System; Texas Instruments IS-54/IS-136 Chipset Prior Art System; Nokia 2120 Plus Prior Art System; Motorola MicroTAC Prior Art System; Motorola StarTAC Prior Art System; NTT DoCoMo N2051 Prior Art System; MacKay at 579; RCR STD 27 at 1136-1140, 1152-55; Prior Art Systems Implementing RCR STD 27; Kupferschmidt at 3:30-36; Nara at 1:14-24; Tsurumaru 3:4-12; TS 25.212 at 9-14, 70-72; Prior Art Systems Implementing TS 25.212; Nokia 6650 Prior Art System; Burkert at Abstract, 7:6-10; Mårtensson at 3:44-4:6, Jacobsen '197 at 3:29-36, Jacobsen IEEE Presentation at slides 3-16, 21.

(iv) "identifies the number of redundant bits having the predetermined value or the number of redundant bits missing the predetermined value" / "the number of redundant bits having the predetermined value or the number of redundant bits missing the predetermined value is identified"

Independent claims 1, 8, and 9 recite limitations relating to whether bit information matches a predetermined value. Comparing bits is a fundamental component of coding/encoding processing. *See, e.g.*, Yeh Thesis at 29-30 (performing Hamming distance bitwise comparisons); Su at 4:66-5:27; MacKay at 9-21, 187, 192, 199, 209-210, 216-219. Comparing a bit to a predetermined value would have been obvious to detect an error given the known methods for judging and managing communication quality in the art. *See, e.g.*, Brouet, Su, Tsurumaru, Krüger, Jamal, Kupferschmidt, Dent, Nara, Sydänmaa, Minde, Mårtensson, Burkert, IS-54B, Yeh Thesis, TS 25.212, MacKay, Analog Devices IS-54/IS-136 IF Baseband Chipset Prior Art System, Texas Instruments IS-54/IS-136 Chipset Prior Art System, Nokia 2120 Plus Prior Art System, Nokia

6650 Prior Art System, Motorola MicroTAC Prior Art System, Motorola StarTAC Prior Art System, NTT DoCoMo N2051 Prior Art System, Prior Art Systems Implementing IS-54-B, Prior Art Systems Implementing TS 25.212, Prior Art Systems Implementing RCR STD 27, RCR STD 27; TI Data Book; Srinivasan; Crockett; Pawate, Jacobsen '197, Jacobsen IEEE Presentation.

Further, comparing bits with a predetermined value through bitwise comparison of the Hamming distance calculation was known at the time of invention. *See*, *e.g.*, Yeh Thesis at 29-30; Su at 4:66-5:27; MacKay at 9-21, 187, 192, 199, 209-210, 216-219. Moreover, during prosecution, the applicant admitted Mårtensson renders this limitation obvious. *See*, Section F.5.b, *supra*; 3/16/10 Office Action at 7-8, 6/4/10 Amendment at 3, 5-6, 7-8; Mårtensson at 3:43-4:30. Additionally, Mårtensson's specification identifies GSM mobile communication systems as applicable (at Abstract) and also refers to TDMA (at 6:10-17). Mårtensson improves residual bit error performance so a POSA seeking to improve reliability, and thus communication quality, would have been motivated to use Mårtensson's teachings. 7:21-27.

A POSA would have been motivated to combine the teachings of Mårtensson, Yeh Thesis, Su, and MacKay regarding comparing bits and identifying the number of redundant bits having or missing a predetermined value with other references using redundant bits to process information to judge and manage communication quality. *See*, *e.g.*, Sydänmaa at 9:16-10:63; Burkert at 7:6-10; IS-54-B at 60-5; Yeh Thesis at Abstract; TS 25.212 at 9-14, 70-72; Analog Devices IS-54/IS-136 IF Baseband Chipset Prior Art System; Texas Instruments IS-54/IS-136 Chipset Prior Art System; Nokia 2120 Plus Prior Art System; Nokia 6650 Prior Art System; Motorola MicroTAC Prior Art System; Motorola StarTAC Prior Art System; NTT DoCoMo N2051 Prior Art System; Prior Art Systems Implementing IS-54-B, Prior Art Systems; RCR STD 27 at 1017-1021, 1030; Prior Art Systems Implementing RCR STD 27; TI Data Book; Crockett at 1-3, 6-7; Pawate at 6, 16; Jamal

at 4:54-5; Minde at 1:51-62, Jacobsen '197, Jacobsen IEEE Presentation. A POSA would have been motivated to do so because using redundancy to process information was well known in the art. For example, the '891 patent even identifies that using redundant bits through CRC was known. *See*, *e.g.*, 891 patent at 1:31-34. These references have interrelated teachings regarding using redundant bits and the common object to judge and manage communication quality, so a POSA would have been motivated to combine them.

To the extent ACT challenges a combination of prior art with respect to a particular element, Defendant may supplement these contentions to further specify the motivation to combine the prior art. Defendant may rely on cited or uncited portions of the prior art, other documents, and/or expert testimony to establish that a person of ordinary skill in the art would have been motivated to modify or combine the prior art so as to render the claims invalid as obvious.

d) Additional Combinations

For at least the reasons described above, it would have been obvious to one of ordinary skill in the art to combine each prior art reference listed in Appendix F with any other reference or references listed in Appendix F along with the knowledge of one of ordinary skill in the art to arrive at the inventions claims in the '891 patent.[41] For example, and without limitation, the Asserted Claims of the '891 patent would have been obvious to one of ordinary skill in the art in view of the following combinations:

Table 4-F: Additional Combinations for the '891 Patent

Patent No. or Title (Primary Inventor/Author)	In Combination with One or More of: (Patent No. or Title (Primary Inventor/Author))

[41] Further, Defendant is actively searching for information regarding at least the systems, devices, and/or inventions listed above in Table 3-F. It would have been obvious to one of ordinary skill in the art to combine each of the prior art references listed in Appendix F with any of the systems identified in Table 3-F. Defendant reserves the right to supplement or amend these contentions as discovery progresses, to the extent permitted by the Court.

IS-54-B	• IS-54-B • Brouet • Su • Tsurumaru • Krüger • Yeh Thesis • Jamal • Kupferschmidt • Dent • Sydänmaa • Nara • ETSI 300 581-3 • ETSI 1992 • TS 25.212 • Brouet • Minde • Mårtensson • Burkert • MacKay • RCR STD 27 • TI Data Book • Srinivasan • Crockett • Pawate • Jacobsen ’197 • Jacobsen IEEE Presentation • Analog Devices IS-54/IS-136 IF Baseband Chipset Prior Art System • Texas Instruments IS-54/IS-136 Prior Art System Chipset • Nokia 2120 Plus Prior Art System • Nokia 6650 Prior Art System • Motorola MicroTAC Prior Art System • Motorola StarTAC Prior Art System • NTT DoCoMo N2051 Prior Art System • Prior Art Systems Implementing IS-54-B

	• Prior Art Systems Implementing TS 25.212 • Prior Art Systems Implementing RCR STD 27 • The knowledge of a person of ordinary skill in the art.
Brouet	• Brouet • IS-54-B • Su • Tsurumaru • Krüger • Yeh Thesis • Jamal • Kupferschmidt • Dent • Sydänmaa • Nara • ETSI 300 581-3 • ETSI 1992 • TS 25.212 • Brouet • Minde • Mårtensson • Burkert • MacKay • RCR STD 27 • TI Data Book • Srinivasan • Crockett • Pawate • Jacobsen ’197 • Jacobsen IEEE Presentation • Analog Devices IS-54/IS-136 IF Baseband Chipset Prior Art System • Texas Instruments IS-54/IS-136 Prior Art System Chipset • Nokia 2120 Plus Prior Art System • Nokia 6650 Prior Art System • Motorola MicroTAC Prior Art System

	• Motorola StarTAC Prior Art System • NTT DoCoMo N2051 Prior Art System • Prior Art Systems Implementing IS-54-B • Prior Art Systems Implementing TS 25.212 • Prior Art Systems Implementing RCR STD 27 • The knowledge of a person of ordinary skill in the art.
Su	• IS-54-B • Brouet • Tsurumaru • Krüger • Yeh Thesis • Jamal • Kupferschmidt • Dent • Sydänmaa • Nara • ETSI 300 581-3 • ETSI 1992 • TS 25.212 • Brouet • Minde • Mårtensson • Burkert • MacKay • RCR STD 27 • TI Data Book • Srinivasan • Crockett • Pawate • Jacobsen ’197 • Jacobsen IEEE Presentation • Analog Devices IS-54/IS-136 IF Baseband Chipset Prior Art System • Texas Instruments IS-54/IS-136 Prior Art System Chipset

	• Nokia 2120 Plus Prior Art System • Nokia 6650 Prior Art System • Motorola MicroTAC Prior Art System • Motorola StarTAC Prior Art System • NTT DoCoMo N2051 Prior Art System • Prior Art Systems Implementing IS-54-B • Prior Art Systems Implementing TS 25.212 • Prior Art Systems Implementing RCR STD 27 • The knowledge of a person of ordinary skill in the art.
Krüger	• Krüger • IS-54-B • Su • Tsurumaru • Brouet • Yeh Thesis • Jamal • Kupferschmidt • Dent • Sydänmaa • Nara • ETSI 300 581-3 • ETSI 1992 • TS 25.212 • Brouet • Minde • Mårtensson • Burkert • MacKay • RCR STD 27 • TI Data Book • Srinivasan • Crockett • Pawate • Jacobsen ’197 • Jacobsen IEEE Presentation

	• Analog Devices IS-54/IS-136 IF Baseband Chipset Prior Art System • Texas Instruments IS-54/IS-136 Prior Art System Chipset • Nokia 2120 Plus Prior Art System • Nokia 6650 Prior Art System • Motorola MicroTAC Prior Art System • Motorola StarTAC Prior Art System • NTT DoCoMo N2051 Prior Art System • Prior Art Systems Implementing IS-54-B • Prior Art Systems Implementing TS 25.212 • Prior Art Systems Implementing RCR STD 27 • The knowledge of a person of ordinary skill in the art.
Yeh Thesis	• Yeh Thesis • IS-54-B • Su • Tsurumaru • Krüger • Brouet • Jamal • Kupf • erschmidt • Dent • Sydänmaa • Nara • ETSI 300 581-3 • ETSI 1992 • TS 25.212 • Brouet • Minde • Mårtensson • Burkert • MacKay • RCR STD 27

	• TI Data Book • Srinivasan • Crockett • Pawate • Jacobsen ’197 • Jacobsen IEEE Presentation • Analog Devices IS-54/IS-136 IF Baseband Chipset Prior Art System • Texas Instruments IS-54/IS-136 Prior Art System Chipset • Nokia 2120 Plus Prior Art System • Nokia 6650 Prior Art System • Motorola MicroTAC Prior Art System • Motorola StarTAC Prior Art System • NTT DoCoMo N2051 Prior Art System • Prior Art Systems Implementing IS-54-B • Prior Art Systems Implementing TS 25.212 • Prior Art Systems Implementing RCR STD 27 • The knowledge of a person of ordinary skill in the art.
TS 25.212	• TS 25.212 • IS-54-B • Su • Tsurumaru • Krüger • Yeh Thesis • Jamal • Kupferschmidt • Dent • Sydänmaa • Nara • ETSI 300 581-3 • ETSI 1992 • Brouet • Minde

	• Mårtensson • Burkert • MacKay • RCR STD 27 • TI Data Book • Srinivasan • Crockett • Pawate • Jacobsen ’197 • Jacobsen IEEE Presentation • Analog Devices IS-54/IS-136 IF Baseband Chipset Prior Art System • Texas Instruments IS-54/IS-136 Prior Art System Chipset • Nokia 2120 Plus Prior Art System • Nokia 6650 Prior Art System • Motorola MicroTAC Prior Art System • Motorola StarTAC Prior Art System • NTT DoCoMo N2051 Prior Art System • Prior Art Systems Implementing IS-54-B • Prior Art Systems Implementing TS 25.212 • Prior Art Systems Implementing RCR STD 27 • The knowledge of a person of ordinary skill in the art.
Minde	• Minde • IS-54-B • Su • Tsurumaru • Krüger • Yeh Thesis • Jamal • Kupferschmidt • Dent • Sydänmaa • Nara

	• ETSI 300 581-3 • ETSI 1992 • Brouet • Mårtensson • Burkert • MacKay • RCR STD 27 • TI Data Book • Srinivasan • Crockett • Pawate • Jacobsen ’197 • Jacobsen IEEE Presentation • Analog Devices IS-54/IS-136 IF Baseband Chipset Prior Art System • Texas Instruments IS-54/IS-136 Prior Art System Chipset • Nokia 2120 Plus Prior Art System • Nokia 6650 Prior Art System • Motorola MicroTAC Prior Art System • Motorola StarTAC Prior Art System • NTT DoCoMo N2051 Prior Art System • Prior Art Systems Implementing IS-54-B • Prior Art Systems Implementing TS 25.212 • Prior Art Systems Implementing RCR STD 27 • The knowledge of a person of ordinary skill in the art.
Analog Devices IS-54/IS-136 IF Baseband Chipset Prior Art System	• Analog Devices IS-54/IS-136 IF Baseband Chipset Prior Art System • Texas Instruments IS-54/IS-136 Prior Art System Chipset • Nokia 2120 Plus Prior Art System • Nokia 6650 Prior Art System

	• Motorola MicroTAC Prior Art System • Motorola StarTAC Prior Art System • NTT DoCoMo N2051 Prior Art System • Prior Art Systems Implementing IS-54-B • Prior Art Systems Implementing TS 25.212 • Prior Art Systems Implementing RCR STD 27 • Any system implementing the IS-54-B standard can be also combined with any other system implementing the IS-54-B standard in addition to the standard itself and any publications describing the IS-54-B standard • Minde • IS-54-B • Su • Tsurumaru • Krüger • Yeh Thesis • Jamal • Kupferschmidt • Dent • Sydänmaa • Nara • ETSI 300 581-3 • ETSI 1992 • Brouet • Mårtensson • Burkert • MacKay • RCR STD 27 • TI Data Book • Srinivasan • Crockett • Pawate • Jacobsen ’197 • Jacobsen IEEE Presentation

	• The knowledge of a person of ordinary skill in the art.
Texas Instruments IS-54/IS-136 Prior Art System Chipset	• Analog Devices IS-54/IS-136 IF Baseband Chipset Prior Art System • Texas Instruments IS-54/IS-136 Prior Art System Chipset • Nokia 2120 Plus Prior Art System • Nokia 6650 Prior Art System • Motorola MicroTAC Prior Art System • Motorola StarTAC Prior Art System • NTT DoCoMo N2051 Prior Art System • Prior Art Systems Implementing IS-54-B • Prior Art Systems Implementing TS 25.212 • Prior Art Systems Implementing RCR STD 27 • Any system implementing the IS-54-B standard can be also combined with any other system implementing the IS-54-B standard in addition to the standard itself and any publications describing the IS-54-B standard • Minde • IS-54-B • Su • Tsurumaru • Krüger • Yeh Thesis • Jamal • Kupferschmidt • Dent • Sydänmaa • Nara • ETSI 300 581-3 • ETSI 1992 • Brouet

	• Mårtensson • Burkert • MacKay • RCR STD 27 • TI Data Book • Srinivasan • Crockett • Pawate • Jacobsen ’197 • Jacobsen IEEE Presentation • The knowledge of a person of ordinary skill in the art.
Nokia 2120 Plus Prior Art System	• Analog Devices IS-54/IS-136 IF Baseband Chipset Prior Art System • Texas Instruments IS-54/IS-136 Prior Art System Chipset • Nokia 2120 Plus Prior Art System • Nokia 6650 Prior Art System • Motorola MicroTAC Prior Art System • Motorola StarTAC Prior Art System • NTT DoCoMo N2051 Prior Art System • Prior Art Systems Implementing IS-54-B • Prior Art Systems Implementing TS 25.212 • Prior Art Systems Implementing RCR STD 27 • Any system implementing the IS-54-B standard can be also combined with any other system implementing the IS-54-B standard in addition to the standard itself and any publications describing the IS-54-B standard • Minde • IS-54-B • Su • Tsurumaru

	• Krüger • Yeh Thesis • Jamal • Kupferschmidt • Dent • Sydänmaa • Nara • ETSI 300 581-3 • ETSI 1992 • Brouet • Mårtensson • Burkert • MacKay • RCR STD 27 • TI Data Book • Srinivasan • Crockett • Pawate • Jacobsen ’197 • Jacobsen IEEE Presentation • The knowledge of a person of ordinary skill in the art.
Nokia 6650 Prior Art System	• Analog Devices IS-54/IS-136 IF Baseband Chipset Prior Art System • Texas Instruments IS-54/IS-136 Prior Art System Chipset • Nokia 2120 Plus Prior Art System • Nokia 6650 Prior Art System • Motorola MicroTAC Prior Art System • Motorola StarTAC Prior Art System • NTT DoCoMo N2051 Prior Art System • Prior Art Systems Implementing IS-54-B • Prior Art Systems Implementing TS 25.212 • Prior Art Systems Implementing RCR STD 27

	• Any system implementing the GSM / UMTS standards can be also combined with any other system implementing GSM / UMTS standards in addition to the standards themselves and any publications describing GSM / UMTS standards (*e.g.*, TS 25.212) • Minde • IS-54-B • Su • Tsurumaru • Krüger • Yeh Thesis • Jamal • Kupferschmidt • Dent • Sydänmaa • Nara • ETSI 300 581-3 • ETSI 1992 • Brouet • Mårtensson • Burkert • MacKay • RCR STD 27 • TI Data Book • Srinivasan • Crockett • Pawate • Jacobsen ’197 • Jacobsen IEEE Presentation • The knowledge of a person of ordinary skill in the art.
Motorola MicroTAC Prior Art System	• Analog Devices IS-54/IS-136 IF Baseband Chipset Prior Art System • Texas Instruments IS-54/IS-136 Prior Art System Chipset • Nokia 2120 Plus Prior Art System • Nokia 6650 Prior Art System

	• Motorola MicroTAC Prior Art System • Motorola StarTAC Prior Art System • NTT DoCoMo N2051 Prior Art System • Prior Art Systems Implementing IS-54-B • Prior Art Systems Implementing TS 25.212 • Prior Art Systems Implementing RCR STD 27 • Any system implementing the IS-54-B standard can be also combined with any other system implementing the IS-54-B standard in addition to the standard itself and any publications describing the IS-54-B standard • Minde • IS-54-B • Su • Tsurumaru • Krüger • Yeh Thesis • Jamal • Kupferschmidt • Dent • Sydänmaa • Nara • ETSI 300 581-3 • ETSI 1992 • Brouet • Mårtensson • Burkert • MacKay • RCR STD 27 • TI Data Book • Srinivasan • Crockett • Pawate • Jacobsen ’197 • Jacobsen IEEE Presentation

	• The knowledge of a person of ordinary skill in the art.
Motorola StarTAC Prior Art System	• Analog Devices IS-54/IS-136 IF Baseband Chipset Prior Art System • Texas Instruments IS-54/IS-136 Prior Art System Chipset • Nokia 2120 Plus Prior Art System • Nokia 6650 Prior Art System • Motorola MicroTAC Prior Art System • Motorola StarTAC Prior Art System • NTT DoCoMo N2051 Prior Art System • Prior Art Systems Implementing IS-54-B • Prior Art Systems Implementing TS 25.212 • Prior Art Systems Implementing RCR STD 27 • Any system implementing the IS-54-B standard can be also combined with any other system implementing the IS-54-B standard in addition to the standard itself and any publications describing the IS-54-B standard • Minde • IS-54-B • Su • Tsurumaru • Krüger • Yeh Thesis • Jamal • Kupferschmidt • Dent • Sydänmaa • Nara • ETSI 300 581-3 • ETSI 1992 • Brouet

	• Mårtensson • Burkert • MacKay • RCR STD 27 • TI Data Book • Srinivasan • Crockett • Pawate • Jacobsen ’197 • Jacobsen IEEE Presentation • The knowledge of a person of ordinary skill in the art.
NTT DoCoMo N2051 Prior Art System	• Analog Devices IS-54/IS-136 IF Baseband Chipset Prior Art System • Texas Instruments IS-54/IS-136 Prior Art System Chipset • Nokia 2120 Plus Prior Art System • Nokia 6650 Prior Art System • Motorola MicroTAC Prior Art System • Motorola StarTAC Prior Art System • NTT DoCoMo N2051 Prior Art System • Prior Art Systems Implementing IS-54-B • Prior Art Systems Implementing TS 25.212 • Prior Art Systems Implementing RCR STD 27 • Any system implementing FOMA W-CDMA standards can be also combined with any other system implementing FOMA W-CDMA standards in addition to the standard itself and any publications describing FOMA W-CDMA standards • Minde • IS-54-B • Su • Tsurumaru

	• Krüger • Yeh Thesis • Jamal • Kupferschmidt • Dent • Sydänmaa • Nara • ETSI 300 581-3 • ETSI 1992 • Brouet • Mårtensson • Burkert • MacKay • RCR STD 27 • TI Data Book • Srinivasan • Crockett • Pawate • Jacobsen ’197 • Jacobsen IEEE Presentation • The knowledge of a person of ordinary skill in the art.
Prior Art Systems Implementing IS-54-B	• Analog Devices IS-54/IS-136 IF Baseband Chipset Prior Art System • Texas Instruments IS-54/IS-136 Prior Art System Chipset • Nokia 2120 Plus Prior Art System • Nokia 6650 Prior Art System • Motorola MicroTAC Prior Art System • Motorola StarTAC Prior Art System • NTT DoCoMo N2051 Prior Art System • Prior Art Systems Implementing IS-54-B • Prior Art Systems Implementing TS 25.212 • Prior Art Systems Implementing RCR STD 27

	• Any system implementing the IS-54-B standard can be also combined with any other system implementing the IS-54-B standard in addition to the standard itself and any publications describing the IS-54-B standard • Minde • IS-54-B • Su • Tsurumaru • Krüger • Yeh Thesis • Jamal • Kupferschmidt • Dent • Sydänmaa • Nara • ETSI 300 581-3 • ETSI 1992 • Brouet • Mårtensson • Burkert • MacKay • RCR STD 27 • TI Data Book • Srinivasan • Crockett • Pawate • Jacobsen ’197 • Jacobsen IEEE Presentation • The knowledge of a person of ordinary skill in the art.
Prior Art Systems Implementing TS 25.212	• Analog Devices IS-54/IS-136 IF Baseband Chipset Prior Art System • Texas Instruments IS-54/IS-136 Prior Art System Chipset • Nokia 2120 Plus Prior Art System • Nokia 6650 Prior Art System

	• Motorola MicroTAC Prior Art System • Motorola StarTAC Prior Art System • NTT DoCoMo N2051 Prior Art System • Prior Art Systems Implementing IS-54-B • Prior Art Systems Implementing TS 25.212 • Prior Art Systems Implementing RCR STD 27 • Any system implementing the TS 25.212 standard can be also combined with any other system implementing the TS 25.212 standard in addition to the standard itself and any publications describing the TS 25.212 standard • Minde • IS-54-B • Su • Tsurumaru • Krüger • Yeh Thesis • Jamal • Kupferschmidt • Dent • Sydänmaa • Nara • ETSI 300 581-3 • ETSI 1992 • Brouet • Mårtensson • Burkert • MacKay • RCR STD 27 • TI Data Book • Srinivasan • Crockett • Pawate • Jacobsen ’197 • Jacobsen IEEE Presentation

	• The knowledge of a person of ordinary skill in the art.
Prior Art Systems Implementing RCR STD 27	• Analog Devices IS-54/IS-136 IF Baseband Chipset Prior Art System • Texas Instruments IS-54/IS-136 Prior Art System Chipset • Nokia 2120 Plus Prior Art System • Nokia 6650 Prior Art System • Motorola MicroTAC Prior Art System • Motorola StarTAC Prior Art System • NTT DoCoMo N2051 Prior Art System • Prior Art Systems Implementing IS-54-B • Prior Art Systems Implementing TS 25.212 • Prior Art Systems Implementing RCR STD 27 • Any system implementing the RCR STD 27 standard can be also combined with any other system implementing the RCR STD 27 standard in addition to the standard itself and any publications describing the RCR STD 27 standard • Minde • IS-54-B • Su • Tsurumaru • Krüger • Yeh Thesis • Jamal • Kupferschmidt • Dent • Sydänmaa • Nara • ETSI 300 581-3 • ETSI 1992 • Brouet

	• Mårtensson • Burkert • MacKay • RCR STD 27 • TI Data Book • Srinivasan • Crockett • Pawate • Jacobsen ’197 • Jacobsen IEEE Presentation • The knowledge of a person of ordinary skill in the art.

e) Secondary Considerations

Additionally, Defendant notes that Plaintiff has neither provided any contention that secondary considerations of non-obviousness exist for the ’891 patent nor provided any evidence of such secondary considerations. Defendant is not aware of any evidence supporting the existence of any such secondary considerations. This lack of evidence further renders the Asserted Claims obvious. Proving any such secondary considerations is ACT’s burden. *See, e.g., ZUP, LLC v. Nach Mfg., Inc.*, 896 F.3d 1365, 1373 (Fed. Cir. 2018) (“[A] patentee bears the burden of production with respect to evidence of secondary considerations of nonobviousness.”). To date, ACT has identified no evidence of (1) commercial success of the claimed subject matter; (2) long felt but unresolved needs; (3) failure of others; (4) teaching away from the claimed subject matter by the prior art; (5) copying or acclamation by others; and (6) skepticism of experts—let alone any nexus between any alleged secondary considerations and the Asserted Claims. Defendant thus reserves the right to supplement its contentions with respect to secondary considerations once ACT has adequately identified such secondary considerations and/or their alleged nexus to the Asserted Claims.

“The fact of near-simultaneous invention, though not determinative of statutory obviousness, is strong evidence of what constitutes the level of ordinary skill in the art.”

Ecolochem, Inc. v. S. Cal. Edison Co., 227 F.3d 1361, 1379 (Fed. Cir. 2000) (citing *The Int'l Glass Co. v. United States*, 187 Ct. Cl. 376, 408 F.2d 395, 405 (1969)). "[T]he possibility of near simultaneous invention by two or more equally talented inventors working independently, . . . may [] be an indication of obviousness when considered in light of all the circumstances." *Id.* (citing *Lindeman Maschinenfabrik GmbH v. American Hoist & Derrick Co.*, 730 F.2d 1452, 1460 (Fed. Cir. 1984)); *see also George M. Martin Co. v. Alliance Mach. Sys. Int'l LLC*, 618 F.3d 1284, 1305 (Fed. Cir. 2010) ("Independently made, simultaneous inventions, made within a comparatively short space of time, are persuasive evidence that the claimed apparatus was the product only of ordinary mechanical or engineering skill."). To the extent that any of the references in these preliminary invalidity contentions is found not to be prior art to the respective Asserted Patents, these references may be relied upon as evidence of near-simultaneous invention favoring obviousness.

To the extent ACT is permitted to introduce contentions and/or evidence concerning secondary considerations in the future, Defendant reserved all rights to rebut those contentions if and when ACT identifies them. In the meantime, Defendant notes the complete lack of any such evidence in the record. Moreover, Defendant further contends that, in any event, the evidence of obviousness for each asserted claim is so overwhelming that secondary considerations are necessarily insufficient to rebut Defendant's showing. *See, e.g.*, *Ohio Willow Wood Co. v. Alps South, LLC*, 735 F.3d 1333, 1344 (Fed. Cir. 2013) ("[W]here a claimed invention represents no more than the predictable use of prior art elements according to established functions, as here, evidence of secondary indicia are frequently deemed inadequate to establish non-obviousness.").

6. 35 U.S.C. § 112 Invalidity Under P.R. 3–3(d)

Pursuant to P.R. 3–3(d), Defendant contends that the Asserted Claims of the '891 patent are invalid under 35 U.S.C. § 112 because the claims are indefinite, not enabled, or lack written

description. Defendant's contentions that the following claims are invalid under 35 U.S.C. § 112 are made in the alternative and do not constitute, and should not be interpreted as, admissions regarding the construction or scope of the claims of the '891 patent, or that any of the claims of the '891 patent are not anticipated or rendered obvious by prior art. The following contentions, made pursuant to P.R. 3–3(d), are subject to revision and amendment pursuant to P.R. 3–6 and Federal Rule of Civil Procedure 26(e) and the Orders of record in this matter to the extent appropriate, *e.g.*, in light of further investigation and discovery regarding the defenses, the Court's construction of the claims at issue, and/or review and analysis of expert witnesses. Defendant offers these contentions in response to ACT's Infringement Contentions and without prejudice to any position it may ultimately take as to any claim construction issues.

a) Indefiniteness under 35 U.S.C. § 112, Second Paragraph

35 U.S.C. § 112 includes a definiteness requirement. *See* 35 U.S.C. § 112, ¶ 2 ("[T]he specification shall conclude with one or more claims particularly pointing out and distinctly claiming the subject matter which the applicant regards as his invention."). "[A] patent is invalid for indefiniteness if its claims, read in light of the specification delineating the patent, and the prosecution history, fail to inform, with reasonable certainty, those skilled in the art about the scope of the invention." *Nautilus, Inc. v. Biosig Instruments, Inc.*, 134 S. Ct. 2120, 2124 (2014).

The Asserted Claims are invalid as indefinite under 35 U.S.C. § 112, second paragraph, for failing to particularly point out and distinctly claim the subject matter which the applicants regard as their invention. The specification of the '891 patent provides no objective standard by which one of ordinary skill in the art could determine the meaning of the asserted claim elements. In particular, at least the following claim terms are indefinite because they fail to particularly point

out and distinctly claim the subject matter which the applicants regarded as their alleged inventions.[42]

Claim 1 and its dependent claims are invalid for indefiniteness as to the phrase "a symbol judging means for obtaining a baseband signal representative of a sequence of multilevel symbols and judging the symbol represented by the baseband signal" because this term when read in light of the specification delineating the patent and the prosecution history, fails to inform, with reasonable certainty, those skilled in the art about the scope of the invention. For example, the limitation fails to inform a person of ordinary skill what type of "judging" of "the symbol represented by the baseband signal" is claimed, such as how "the symbol represented by the baseband signal" is to be judged or the requirements by which "the symbol represented by the baseband signal" is to be judged. Accordingly, a person of ordinary skill in the art would not understand the bounds of "judging the symbol represented by the baseband signal." Furthermore, independent claims 8 and 9 each recite a substantially similar limitation, and thus are invalid for indefiniteness for the same reason.

Additionally, claim 1 and its dependent claims are invalid for indefiniteness as to the phrase "a data changing means for, if the communication quality judged by the communication quality judging means does not satisfy a predetermined condition, making a predetermined change to the data to be transmitted represented by the symbol used in the judgment" because this term when read in light of the specification delineating the patent and the prosecution history, fails to inform, with reasonable certainty, those skilled in the art about the scope of the invention. For example, the limitation fails to inform a person of ordinary skill what the claimed "predetermined condition" is such that if that "predetermined condition" is not satisfied, a "predetermined change" is made.

[42] Dependent claims are also invalid as being dependent upon a base claim that is indefinite under 35 U.S.C. § 112, second paragraph.

For example, a person of ordinary skill in the art would not understand the temporal requirements as to when the condition or change are "predetermined" which may vary in time. Accordingly a person of ordinary skill in the art would not understand the bounds of the claimed "predetermined condition" and "predetermined change." Further, the limitation fails to inform a person of ordinary skill of whether assessing "if the communication quality judged by the communication quality judging means does not satisfy a predetermined condition" is part of, either or both, the data changing means and communication quality judging means or is independent of, either or both, the data changing means and communication quality judging means. Furthermore, independent claims 8 and 9 each recite a substantially similar limitation, and thus are invalid for indefiniteness for the same reason.

Similarly, claim 1 and its dependent claims are invalid for indefiniteness as to the phrase "a redundant bit having a predetermined value" because this term when read in light of the specification delineating the patent and the prosecution history, fails to inform, with reasonable certainty, those skilled in the art about the scope of the invention. For example, a person of ordinary skill in the art would not understand the temporal requirements as to when the value is "predetermined" which may vary in time. Accordingly a person of ordinary skill in the art would not understand the bounds of the claimed "predetermined value." Independent claims 8 and 9 each recite a substantially similar limitation, and thus are invalid for indefiniteness for the same reason.

Furthermore, the scope of several dependent claim terms relating to the "predetermined change," when read in light of the specification and prosecution history, fails to inform those skilled in the art about the scope of the invention with reasonable certainty. For example, in dependent claim 3, the phrase "wherein the predetermined change includes a process of substantially destroying the data to be transmitted represented by the symbol used to judge that the

communication quality does not satisfy a predetermined condition" is indefinite because this phrase when read in light of the specification delineating the patent and the prosecution history, fails to inform, with reasonable certainty, those skilled in the art about the scope of the invention. For example, the limitation fails to inform a person of ordinary skill what "substantially destroy" means and to what extent the process destroys the data. A person of ordinary skill in the art would not understand the bounds of the claimed "process of substantially destroying the data to be transmitted . . ." Therefore, claim 3 is indefinite.

Additionally, in dependent claim 4, the phrase "wherein the predetermined change includes a process of replacing the data to be transmitted represented by the symbol used to judge that the communication quality does not satisfy a predetermined condition, with previous data represented by a symbol previously obtained by the symbol judging means" is indefinite because this phrase when read in light of the specification delineating the patent and the prosecution history, fails to inform, with reasonable certainty, those skilled in the art about the scope of the invention. For example, the limitation fails to inform a person of ordinary skill what "a process of replacing the data" means and what is considered a part of the "process" that replaces the data. A person of ordinary skill in the art would not understand the bounds of the claimed "process of replacing the data . . ." Therefore, claim 4 is indefinite.

Also, in dependent claim 6, the phrase "the predetermined change includes an attenuating process of changing the data to be transmitted represented by the symbol used to judge that the communication quality does not satisfy a predetermined condition, to a data equivalent in which the variable represented by the data is attenuated" is indefinite because this phrase when read in light of the specification delineating the patent and the prosecution history, fails to inform, with reasonable certainty, those skilled in the art about the scope of the invention. For example, the

limitation fails to inform a person of ordinary skill what "an attenuating process of changing the data" means and to what extent the process attenuates the data. A person of ordinary skill in the art would not understand the bounds of the claimed "attenuating process of changing the data . . ." Therefore, claim 6 is indefinite.

Also, several claims recite the limitation "at least a portion of" which is indefinite. Claims 1, 2, 8, and 9 recite a variation of "at least a portion of [a bit string /the symbol / the condition]" and when read in light of the specification delineating the patent and the prosecution history, fail to inform, with reasonable certainty, those skilled in the art about the scope of the invention. For example, the limitations fail to inform a person of ordinary skill what the how much or how little "a portion" of "a bit string," "the symbol" "the condition" is. Accordingly, a person of ordinary skill in the art would not understand the bounds of the claimed "portion."

Additionally, the following claim terms are used without proper antecedent basis: "the symbol" (*see*, *e.g.*, claims 1, 8-9 "obtaining a baseband signal representative of a sequence of multilevel symbols and judging the symbol represented by the baseband signal"), "bit string" (*see*, *e.g.*, claims 1, 8-9 "wherein at least a portion of a bit string is distinguished as a protected portion, the bit string constituting data to be transmitted represented by the sequence of symbols, and at least a portion of the symbol that belongs to the sequence of symbols contains a bit belonging to the protected portion and a redundant bit having a predetermined value").

The above are examples of some of the indefinite claim limitations. The following limitations recited in the '891 patent Asserted Claims are indefinite in whole, in part or in combination, as summarized below:[43]

Table 5-F: Indefinite Terms under 35 U.S.C. § 112(2) the '891 Patent

[43] Listed claims also include all Asserted Claims dependent thereon, even if those claims are not individually listed.

Term	Relevant Claim(s)
"a symbol judging means for obtaining a baseband signal representative of a sequence of multilevel symbols and judging the symbol represented by the baseband signal" / "obtaining a baseband signal representative of a sequence of multilevel symbols and judging the symbol represented by the baseband signal"	1, 8-9
"a data changing means for, if the communication quality judged by the communication quality judging means does not satisfy a predetermined condition, making a predetermined change to the data to be transmitted represented by the symbol used in the judgment" / "changing data if the communication quality judged in the communication quality judging step does not satisfy a predetermined condition, to make a predetermined change to the data to be transmitted represented by the symbol used in the judgment"	1, 8-9
"a redundant bit having a predetermined value"	1, 8-9
"wherein the predetermined change includes a process of substantially destroying the data to be transmitted represented by the symbol used to judge that the communication quality does not satisfy a predetermined condition"	3
"wherein the predetermined change includes a process of replacing the data to be transmitted represented by the symbol used to judge that the communication quality does not satisfy a predetermined condition, with previous data represented by a symbol previously obtained by the symbol judging means"	4
"wherein the data to be transmitted is composed of data representative of strength of a variable, and the predetermined change includes an attenuating process of changing the data to be transmitted represented by the symbol used to judge that the communication quality does not satisfy a predetermined condition, to a data equivalent in which the variable represented by the data is attenuated"	6

"at least a portion of [a bit string / the symbol / the condition]"	1, 2, 8-9
"the symbol"	1, 8-9
"bit string"	1, 8-9
"a communication quality judging means for judging communication quality of a transmission channel over which the baseband signal has been transmitted, based on content of the symbol judged by the symbol judging means" / "judging communication quality of a transmission channel over which the baseband signal has been transmitted, based on content of the symbol judged in the symbol judging step"	1, 8-9
"wherein at least a portion of a bit string is distinguished as a protected portion, the bit string constituting data to be transmitted represented by the sequence of symbols, and at least a portion of the symbol that belongs to the sequence of symbols contains a bit belonging to the protected portion and a redundant bit having a predetermined value"	1, 8-9
"among the redundant bits contained in the symbol that contains a bit belonging to the protected portion"	1, 8-9
"identifies the number of redundant bits having the predetermined value or the number of redundant bits missing the predetermined value among the redundant bits contained in the symbol that contains a bit belonging to the protected portion, and judges the communication quality of the transmission channel based on the identified result" / "the number of redundant bits having the predetermined value or the number of redundant bits missing the predetermined value is identified among the redundant bits contained in the symbol that contains a bit belonging to the protected portion, and the communication quality of the transmission channel is judged based on the identified result"	1, 8-9
"externally obtaining a parameter"	2

[redacted]

b) Indefiniteness under 35 U.S.C. § 112, Second and Sixth Paragraphs as Improper Means-Plus-Function/ Step-Plus-Function Limitations[44]

Means-plus-function claim limitations and step-plus-function claim limitations "shall be construed to cover the corresponding structure, material, or acts described in the specification and equivalents thereof." 35 U.S.C. § 112 ¶ 6. Claims governed by 35 U.S.C. § 112, ¶ 6 are indefinite if "the claim term fails to recite sufficiently definite structure or else recites function without reciting sufficient structure for performing that function." *Williamson v. Citrix Online, LLC*, 792 F.3d 1339, 1349 (Fed. Cir. 2015) (en banc). To the extent certain of the claim elements in the Asserted Claims are governed by 35 U.S.C. § 112, ¶ 6, they lack sufficiently definite structure. For example, the Asserted Claims recite elements performing functions without sufficiently disclosing any structure capable of performing those functions.

An inadequate disclosure of a structure corresponding to the claimed function constitutes a violation of both paragraphs 2 and 6 of Section 112. *In Re Donaldson Co.*, 16 F.3d 1189, 1195 (Fed. Cir. 1994) (en banc) ("If an applicant fails to set forth an adequate disclosure, the applicant has in effect failed to particularly point out and distinctly claim the invention as required by the second paragraph of section 112."). Therefore, if a claim includes a means-plus-function limitation, failure to disclose adequate structure corresponding to the claimed function results in the claim being invalid for indefiniteness.

Whether the patent adequately sets forth structure corresponding to the function is ascertained from the perspective of a skilled artisan. *Intel Corp. v. VIA Techs., Inc.*, 319 F.3d 1357, 1365-66 (Fed. Cir. 2003). But the question is not whether a skilled artisan would be capable of

---

[44] The claim construction process has not yet started and Defendant's Contentions herein are not, and should in no way be seen as, admissions or adoptions as to any particular claim scope or construction. Defendant will provide its claim construction positions per the Third Amended Docket Control Order (D.I. 46). *See* Section II.B, *supra*.

implementing a structure to perform the function, but whether that person would understand the written description to disclose such a structure. *Biomedino, LLC v. Waters Techs. Corp.*, 490 F.3d 946, 953 (Fed. Cir. 2007). "Whether the disclosure would enable one of ordinary skill in the art to make and use the invention is not at issue here." *Aristocrat*, 512 F.3d at 1336 (noting that a § 112, ¶ 6 disclosure serves a very different purpose from enablement). The "consideration of the understanding of one skilled in the art in no way relieves the patentee of adequately disclosing sufficient structure in the specification. It is not enough for the patentee simply to state or later argue that persons of ordinary skill in the art would know what structures to use to accomplish the claimed function." *Id.* The proper inquiry is "to look at the *disclosure* of the patent and determine if one of skill in the art would have understood that *disclosure* to encompass software to perform the claimed function and been able to implement such a program, not simply whether one of skill in the art would have been able to write such a software program." *Id.* at 1337 (internal quotations omitted, emphasis in original).

A structure disclosed in the specification qualifies as "corresponding" only if the specification or prosecution history "clearly links or associates" that structure to the function recited in the claim. *Asyst Technologies, Inc. v. Empak, Inc.*, 268 F.3d 1364, 1370 (Fed. Cir. 2001) (internal citation omitted). Furthermore, the corresponding structure "must actually perform the recited function, not merely enable the pertinent structure to operate as intended." *Id.* at 1371.

To the extent section 112, ¶ 6 governs, various claim terms recite a function performed or result achieved without reciting particular structures for performing the function or achieving the result. Further, to the extent a skilled artisan would lack reasonable certainty as to whether any of the below claim terms do or do not invoke section 112, ¶ 6, that alone renders the claim scope

unclear. The specification of the '891 patent does not inform one of ordinary skill in the art about the scope of the inventions with reasonable certainty.

To the extent section 112, ¶ 6 governs, for example, claim 1 and its dependent claims are invalid under 35 U.S.C. § 112, ¶¶ 2 and 6 as to the "symbol judging means for," "communications quality judging means for," and "data changing means for" limitations which expressly use "means for" language. Neither the claims nor the specification describe adequate structure, material, or acts corresponding to the recited function, and because these terms, when read in light of the specification delineating the patent, and the prosecution history, fail to inform, with reasonable certainty, those skilled in the art about the scope of the invention. The specification fails to disclose a sufficient structure or algorithm corresponding to the symbol judging, communicating judging, or data changing functions. Further, the "symbol judging step," "communication quality judging step," and "changing data" step in independent claims 8 and 9 are invalid under 35 U.S.C. § 112, ¶¶ 2 and 6 for the same reason because neither the claims nor the specification describe adequate structure, material, or acts corresponding to the recited function, and because these terms when read in light of the specification delineating the patent, and the prosecution history, fail to inform, with reasonable certainty, those skilled in the art about the scope of the invention.

The following limitations recited in the '891 patent Asserted Claims are indefinite in whole, in part or in combination, as summarized below:[45]

Table 6-F: Indefinite Terms under 35 U.S.C. § 112(2), (6) for the '891 Patent as Improper Means-Plus-Function / Step-Plus-Function Terms

Term	Relevant Claim(s)
"a symbol judging means for obtaining a baseband signal representative of a sequence	1-4, 6

[45] Listed claims also include all Asserted Claims dependent thereon, even if those claims are not individually listed.

of multilevel symbols and judging the symbol represented by the baseband signal”	
“a communication quality judging means for judging communication quality of a transmission channel over which the baseband signal has been transmitted, based on content of the symbol judged by the symbol judging means; . . . wherein the communication quality judging means identifies the number of redundant bits having the predetermined value or the number of redundant bits missing the predetermined value among the redundant bits contained in the symbol that contains a bit belonging to the protected portion, and judges the communication quality of the transmission channel based on the identified result”	1-4, 6
“a data changing means for, if the communication quality judged by the communication quality judging means does not satisfy a predetermined condition, making a predetermined change to the data to be transmitted represented by the symbol used in the judgment”	1-4, 6
“wherein the data changing means comprises means for externally obtaining a parameter that defines at least a portion of the condition”	2
“obtaining a baseband signal representative of a sequence of multilevel symbols and judging the symbol represented by the baseband signal”	8-9
“judging communication quality of a transmission channel over which the baseband signal has been transmitted, based on content of the symbol judged in the symbol judging step; . . . wherein, in the communication quality judging step, the number of redundant bits having the predetermined value or the number of redundant bits missing the predetermined value is identified among the redundant bits contained in the symbol that contains a bit belonging to the protected portion, and the communication quality of the transmission channel is judged based on the identified result.”	8-9
“changing data if the communication quality judged in the communication quality judging	8-9

step does not satisfy a predetermined condition, to make a predetermined change to the data to be transmitted represented by the symbol used in the judgment"	

c) Lack of Enablement and/or Lack of Written Description

35 U.S.C. § 112, paragraph 1, includes an enablement requirement. *See* 35 U.S.C. § 112, ¶ 1 ("The specification shall contain a written description . . . of the manner and process of making and using [the invention] in such full, clear, concise and exact terms as to enable any person skilled in the art to which it pertains, or with which it is most nearly connected, to make and use the same.").

To satisfy the enablement requirement of 35 U.S.C. § 112, paragraph 1, the disclosure "must teach those skilled in the art how to make and use the full scope of the claimed invention without 'undue experimentation.'" *Genentech, Inc. v. Novo Nordisk, A/S*, 108 F.3d 1361, 1365 (Fed. Cir. 1997) (citations omitted). Moreover, "[i]t is the specification, not the knowledge of one skilled in the art, that must supply the novel aspects of [the] invention in order to constitute adequate enablement." *Genentech*, 108 F.3d at 1366. The Federal Circuit has enumerated several factors to consider in determining whether a disclosure would require "undue experimentation": (1) the quantity of experimentation necessary; (2) the amount of direction or guidance presented; (3) the presence or absence of working examples; (4) the nature of the invention; (5) the state of the prior art; (6) the relative skill of those in the art; (7) the predictability or unpredictability of the art; and (8) the breadth of the claims. *In re Wands*, 858 F.2d 731, 737 (Fed. Cir. 1988).

To satisfy the written description requirement, the description must "clearly allow persons of ordinary skill in the art to recognize that [the inventor] invented what is claimed." *Ariad Pharmaceuticals, Inc. v. Eli Lilly and Co.*, 598 F.3d 1336, 1351 (Fed. Cir. 2010) (internal citation omitted). In other words, the test for sufficiency is whether the disclosure of the application relied

upon reasonably conveys to those skilled in the art that the inventor had possession of the claimed subject matter as of the filing date. *Id.* The test requires an objective inquiry into the four corners of the specification from the perspective of a person of ordinary skill in the art. Based on that inquiry, the specification must describe an invention understandable to that skilled artisan and show that the inventor actually invented the invention claimed. "Whether the written description requirement is satisfied is a fact-based inquiry that will depend on the nature of the claimed invention, and the knowledge of one skilled in the art at the time an invention is made and a patent application is filed." *Carnegie Mellon Univ. V. Hoffmann La Roche Inc.*, 541 F.3d 1115, 1122 (Fed. Cir. 2008). Actual "possession" or reduction to practice outside of the specification is not enough. Rather, as stated above, it is the specification itself that must demonstrate possession. A description that merely renders the invention obvious does not satisfy the requirement. *Lockwood v. Am. Airlines*, 107 F.3d 1565, 1571-72 (Fed. Cir. 1997).

All Asserted Claims of the '891 patent are invalid for lack of enablement and/or lack written description because they do not contain an enabling or sufficient disclosure of the specific hardware structure, reference software, source code, and/or other specific details of the invention that would enable a person skilled in the art to practice the claimed invention without undue experimentation.[46]

For example, claim 1 and its asserted dependent claims fail to satisfy the requirements of 35 U.S.C. § 112(1) because the specification fails to provide an enabling disclosure of the corresponding structure of the means-plus-function limitations ("symbol judging means for . . .," "communication judging means for . . .", "data changing means for . . ."). Therefore the specification fails to provide a written description of the corresponding structure implementing the

[46] Dependent claims are also invalid as being dependent upon a base claim that is invalid under 35 U.S.C. § 112, first paragraph.

functions as recited in the claims or teach a person of ordinary skill how to implement the same. For the same reasons, the step-plus-function limitations in independent claims 8 and 9 fail (*e.g.*, for the symbol judging step, communication judging step, data changing step). Therefore, independent claims 1, 8, and 9 and the dependent claims are invalid for lack of enablement and/or lack of written description.

For example, claim 3 fails to satisfy the requirements of 35 U.S.C. § 112(1) because the specification fails to provide an enabling disclosure of "wherein the predetermined change includes a process of substantially destroying the data to be transmitted represented by the symbol used to judge that the communication quality does not satisfy a predetermined condition." The specification merely recites that "in step S6, the communication quality judgment unit R5 may, for example, destroy the vocoder output data, or may substantially destroy the content of the vocoder output data such as by changing the content of the vocoder output data such that it represents a silent state." '891 patent at 11:30-34. However, this does not provide an enabling disclosure, including a description of what is encompassed in the "process of substantially destroying the data" or *how* the person of ordinary skill is supposed to substantially destroy the data. Therefore, the specification fails to provide a written description of "wherein the predetermined change includes a process of substantially destroying the data to be transmitted represented by the symbol used to judge that the communication quality does not satisfy a predetermined condition" as recited in the above-listed claims or teach a person of ordinary skill how to make or use the same. Therefore, claim 3 is invalid for lack of enablement and/or lack of written description.

Additionally, claim 6 fails to satisfy the requirements of 35 U.S.C. § 112(1) because the specification fails to provide an enabling disclosure of "the predetermined change includes an attenuating process of changing the data to be transmitted represented by the symbol used to judge

that the communication quality does not satisfy a predetermined condition, to a data equivalent in which the variable represented by the data is attenuated." The specification merely recites that "gains of voices represented by the vocoder output data applicable to (C2) or (C3) described above may be reduced. The attenuation ratio of voices in this case may be larger to a certain extent than, for example, the attenuation ratio applied to vocoder output data immediately before the vocoder output data whose gain is to be reduced, so that voices are reproduced in such a way that when vocoder output data having erroneous content continues, sound volume is reduced as the continuation becomes longer." '891 patent at 13:34-43. However, this does not provide an enabling disclosure, including a description of what is encompassed in the "attenuating process of changing the data" or *how* the person of ordinary skill is supposed to attenuate the data. Therefore, the specification fails to provide a written description of "the predetermined change includes an attenuating process of changing the data to be transmitted represented by the symbol used to judge that the communication quality does not satisfy a predetermined condition, to a data equivalent in which the variable represented by the data is attenuated" as recited in the above-listed claims or teach a person of ordinary skill how to make or use the same. Therefore, claim 6 is invalid for lack of enablement and/or lack of written description.

The above are examples of some of the indefinite claim limitations. The following limitations recited in the '891 Patent Asserted Claims are indefinite in whole, in part or in combination, as summarized below:[47]

Table 7-F: Indefinite Terms under 35 U.S.C. § 112(1) for the '891 Patent

Term	Relevant Claim(s)
"a symbol judging means for obtaining a baseband signal representative of a sequence	1, 8-9

[47] Listed claims also include all Asserted Claims dependent thereon, even if those claims are not individually listed.

of multilevel symbols and judging the symbol represented by the baseband signal" / "obtaining a baseband signal representative of a sequence of multilevel symbols and judging the symbol represented by the baseband signal"	
"a data changing means for, if the communication quality judged by the communication quality judging means does not satisfy a predetermined condition, making a predetermined change to the data to be transmitted represented by the symbol used in the judgment" / "changing data if the communication quality judged in the communication quality judging step does not satisfy a predetermined condition, to make a predetermined change to the data to be transmitted represented by the symbol used in the judgment"	1, 8-9
"a redundant bit having a predetermined value"	1, 8-9
"wherein the predetermined change includes a process of substantially destroying the data to be transmitted represented by the symbol used to judge that the communication quality does not satisfy a predetermined condition"	3
"wherein the predetermined change includes a process of replacing the data to be transmitted represented by the symbol used to judge that the communication quality does not satisfy a predetermined condition, with previous data represented by a symbol previously obtained by the symbol judging means"	4
"wherein the data to be transmitted is composed of data representative of strength of a variable, and the predetermined change includes an attenuating process of changing the data to be transmitted represented by the symbol used to judge that the communication quality does not satisfy a predetermined condition, to a data equivalent in which the variable represented by the data is attenuated"	6
"at least a portion of [a bit string / the symbol / the condition]"	1, 2, 8-9
"the symbol"	1, 8-9
"bit string"	1, 8-9

"a communication quality judging means for judging communication quality of a transmission channel over which the baseband signal has been transmitted, based on content of the symbol judged by the symbol judging means" / "judging communication quality of a transmission channel over which the baseband signal has been transmitted, based on content of the symbol judged in the symbol judging step"	1, 8-9
"wherein at least a portion of a bit string is distinguished as a protected portion, the bit string constituting data to be transmitted represented by the sequence of symbols, and at least a portion of the symbol that belongs to the sequence of symbols contains a bit belonging to the protected portion and a redundant bit having a predetermined value"	1, 8-9
"among the redundant bits contained in the symbol that contains a bit belonging to the protected portion"	1, 8-9
"identifies the number of redundant bits having the predetermined value or the number of redundant bits missing the predetermined value among the redundant bits contained in the symbol that contains a bit belonging to the protected portion, and judges the communication quality of the transmission channel based on the identified result" / "the number of redundant bits having the predetermined value or the number of redundant bits missing the predetermined value is identified among the redundant bits contained in the symbol that contains a bit belonging to the protected portion, and the communication quality of the transmission channel is judged based on the identified result"	1, 8-9
"externally obtaining a parameter"	2

IV. SUBJECT MATTER ELIGIBILITY

Pursuant to the court's Standing Order Regarding Subject Matter Eligibility Contentions Applicable to All Patent Infringement Cases Assigned to Chief District Judge Rodney Gilstrap

("Order Regarding Eligibility"), Defendant provides the following Eligibility Contentions, which incorporate by reference the Subject Matter Eligibility Contentions set forth in Appendices A-F including the accompanying Exhibits (collectively Appendix G).[48] These Subject Matter Eligibility Contentions are subject to revision and amendment pursuant to the Order Regarding Eligibility, Federal Rule of Civil Procedure 26(e), and the Third Amended Docket Control Order (D.I. 46), to the extent appropriate, in light of further investigation and discovery regarding the defenses below, the Court's construction of the claims at issue, and/or the review and analysis of expert witnesses.

As described below and Appendix G, Defendant contends that the Asserted Claims of the Asserted Patents are drawn to subject matter that is not patentable under 35 U.S.C. § 101. Pursuant to section (a)(1) of the Order Regarding Eligibility, Appendix G contains a chart for each Asserted Patent identifying each exception to eligibility to which each Challenged Claim is directed and the factual and legal basis therefor. Pursuant to section (a)(2)(A) of the Order Regarding Eligibility the charts of Appendix G, read in conjunction with the discussion herein and in Appendices A-F, and together with the material described, referenced, or cited in the charts, further provide a description of the industry, at the relevant time, in which the Challenged Claims are alleged to be well understood, routine, and conventional, and the factual and legal basis therefor. Further, pursuant to sections (a)(2)(B) and (a)(3) of the Order Regarding Eligibility the charts of Appendix G, read in conjunction with the discussion herein, and together with the material described, referenced, or cited in the charts, further provides: (i) a description of how each element of each Challenged Claim, both individually and in combination with the other elements of that claim, was well understood, routine, and/or conventional in the relevant industry at the relevant time and (ii)

[48] Defendant's Subject Matter Eligibility Contentions also incorporate by reference Defendant's Invalidity Contentions, *supra*, including Appendices A-F and the accompanying Exhibits.

an identification of the factual or legal basis for how the Challenged Claims are otherwise ineligible for patent protection.

Additionally, pursuant to section (b) of the Order Regarding Eligibility, Defendant is concurrently producing or making available for inspection and copying the materials on which Defendant presently seeks to rely for subject-matter eligibility purposes. These prior art references and other materials are cited herein or in Appendices A-G. For the avoidance of doubt, Defendant may rely on the materials identified in Sections A-F, above. Without concession that expert testimony is necessary to resolve the subject matter eligibility of the Asserted Claims, Defendant reserves the right to further rely on expert testimony to be disclosed in accordance with the Third Amended Docket Control Order (D.I. 46). Defendant's search for prior art references, additional documentation, and/or corroborating evidence concerning prior art systems and devices is ongoing. Accordingly, Defendant reserves the right to supplement its production as Defendant obtains additional prior art references, documentation, and/or corroborating evidence concerning subject matter eligibility during the course of discovery.

Section 101 lists four broad categories of patent-eligible subject matter but is subject to "an important implicit exception" that "[l]aws of nature, natural phenomena, and abstract ideas," which form the "basic tools of scientific and technological work," are not eligible for patent protection. *Alice Corp. Pty. Ltd. v. CLS Bank Int'l*, 573 U.S. 208, 216 (2014) (internal quotation marks omitted). "The 'abstract ideas' category embodies 'the longstanding rule that an idea of itself is not patentable.'" *Id.* at 209 (quoting *Gottschalk v. Benson*, 409 U.S. 63, 67 (1972) (quoting *Rubber-Tip Pencil Co. v. Howard*, 87 U.S. 498 (1874))).

Alice set forth a two-step inquiry. "First, we determine whether the claims at issue are directed to one of those patent-ineligible concepts." *Id.* at 217. In making this inquiry, the claims

"must be considered as a whole." *Id.* at 218 n.3 (quoting *Diamond v. Diehr*, 450 U.S. 175, 188 (1981)). The Federal Circuit has explained that "[a]t step one, we 'look at the focus of the claimed advance over the prior art to determine if the claim's character as a whole is directed to excluded subject matter.'" *Chamberlain Grp. v. Techtronics Indus. Co.*, 935 F.3d 1341, 1346 (Fed. Cir. 2019). "[T]he specification may help illuminate the true focus of a claim" but "must always yield to the claim language." *ChargePoint, Inc. v. SemaConnect, Inc.*, 920 F.3d 759, 766 (Fed. Cir. 2019).

If the claims recite an abstract idea, the second step requires a "search for an 'inventive concept'— an element or combination of elements that is 'sufficient to ensure that the patent in practice amounts to significantly more than a patent upon the [ineligible concept] itself.'" *Alice*, 573 U.S. at 218 (quoting *Mayo Collaborative Servs. v. Prometheus Labs., Inc.*, 566 U.S. 66, 73 (2016)). "A claim that recites an abstract idea must include 'additional features' to ensure 'that the claim is more than a drafting effort designed to monopolize the abstract idea.'" *Id.* at 221 (quoting *Mayo*, 566 U.S. at 78) (alterations omitted). The recited "additional features must be more than well-understood, routine, conventional activity." *Ultramercial, Inc. v. Hulu, LLC*, 772 F.3d 1335, 1339 (Fed. Cir. 2013) (internal quotations omitted). Abstract ideas "cannot supply the inventive concept." *Simio, LLC v. FlexSim Software Products, Inc.*, 983 F.3d 1353, 1363 (Fed. Cir. 2020) (quoting *BSG Tech LLC v. Buyseasons, Inc.*, 899 F.3d 1281, 1288 (Fed. Cir. 2018)).

A representative claim may be used for the *Alice* analysis when the claims are "substantially similar and linked to the same abstract idea." *Mobile Acuity Ltd. v. Blippar Ltd.*, 110 F.4th 1280, 1290 (Fed. Cir. 2024); *see also Content Extraction & Transmission LLC v. Wells Fargo Bank, Nat'l Ass'n*, 776 F.3d 1343, 1348 (Fed. Cir. 2014) (finding 242 claims ineligible based on two representative claims); *Smart Sys. Innovations, LLC v. Chicago Transit Auth.*, 873

F.3d 1364, 1368 n.7 (Fed. Cir. 2017) (concluding that claims "should rise or fall together" when they "contain only minor differences in terminology but require performance of the same basic process" (internal quotation omitted)). *Network Architecture Innovations LLC v. CC Network Inc.*, No. 2:16-CV-00914-JRG, 2017 WL 1398276, at *2 & n.1 (E.D. Tex. Apr. 18, 2017). Further, "[a]n abstract idea can generally be described at different levels of abstraction." *Apple, Inc. v. Ameranth, Inc.*, 842 F.3d 1229, 1240 (Fed Circ. 2016).

Here, under the two-step *Alice* test, the Asserted Claims of each asserted patent are each ineligible, as discussed below and in the attached appendices. Appendices A-F. The articulation of the abstract ideas of the Asserted Claims of each asserted patent provided below are exemplary. Because abstract ideas can be characterized "at different levels of abstraction," Defendant is not limited to the express articulations provided below. *Apple*, 842 F.3d at 140.

A. The Asserted '025 Claims Are Ineligible Based on Representative Claim 6

The Asserted Claims of the '025 patent—claims 1, 3, 4, and 6-10—are each ineligible under § 101 because they are directed to an abstract idea (at *Alice* step 1) and add nothing inventive (at *Alice* step 2). The claims are ineligible based on representative claim 6 because they are "substantially similar and linked to the same abstract idea." *Mobile Acuity*, 110 F.4th at 1290. But they are also ineligible even if considered individually, as discussed herein and in Ex. G01.

At *Alice* step 1, the Asserted Claims are directed to the abstract idea of, for example, encoding, decoding, storing, processing, and selecting data.[49] *See, e.g.*, *Hawk Tech. Sys., LLC v. Castle Retail, LLC*, 60 F.4th 1349, 1357 (Fed. Cir. 2023) ("[C]onverting information from one format to another—including changing the format of video data or compressing it—is an abstract

[49] Given the abstract nature of the claims, the articulation of the abstract idea can include, but is not limited to, the following: encoding and decoding data, images, or video, processing data, images, or video, manipulating data, images, or video, changing the format of data, images, or video, and transmitting and receiving data, images, or video.

idea."); *RecogniCorp, LLC v. Nintendo Co.*, 855 F.3d 1322, 1327-28 (Fed. Cir. 2017) (encoding and decoding data is an abstract idea); *Realtime Data LLC v. Array Networks Inc.*, No. 2021-2251, 2023 WL 4924814, at *9 (Fed. Cir. Aug. 2, 2023) (claims for encoding data using compression algorithms were abstract). At a more granular level, the claims recite well-known elements that had been used for many years in conventional and standardized encoding/decoding technologies, with the purported advance over the prior art being motion compensation that "satisfies Poisson's Equation." This, too, is not patent eligible because the claims are directed to prior art encoding/decoding elements and an instruction to apply a mathematical formula ("Poisson's Equation"). *See, e.g., Parker v. Flook*, 437 U.S. 584, 590-95 (1978) (ineligible claims using mathematical equation); *SAP Am., Inc. v. InvestPic, LLC*, 898 F.3d 1161 (Fed. Cir. 2018) (ineligible claims for "mathematical calculations based on selected information and the presentation of the results of those calculations"); *RecogniCorp*, 855 F.3d at 1327 ("Adding one abstract idea (math) to another abstract idea (encoding and decoding) does not render the claim non-abstract."). Thus, the '025 Asserted Claims are directed to one or more ineligible concepts.

Under *Alice* Step 2, the '025 patent does not add an inventive step to the general abstract concept of encoding, decoding, storing, processing, and selecting data or to the instruction apply a mathematical formula (Poisson's Equation) to encoding/decoding technology. The '025 patent employs well-known components (*e.g.*, a "demultiplexer," an "entropy decoder," a "combiner," a "memory," a "selector," and "a decoding controller") and conventional functionality (*e.g.*, "predictive coding," "quantization," using a "reference picture," "inverse-quantization," "inverse-orthogonal transform," etc.). The patent specification treats those as conventional. *See Beteiro, LLC v. DraftKings Inc.*, 104 F.4th 1350, 1358 (Fed. Cir. 2024) ("Where, as here, the specification 'describes the components and features listed in the claims generically,' it 'support[s]

the conclusion that these components and features are conventional.'"). Those are similar to elements the Federal Circuit has found non-inventive. *See, e.g.*, *Hawk*, 60 F.4th at 1353 (ineligible claims recited converting video data using elements such as "analog-to-digital converter").

The remaining elements of the claims are directed to using the conventional elements described above in such a way "that satisfies Poisson's equation." The use of Poisson's equation—a patent-ineligible equation—cannot supply an inventive step, nor can the conventional elements themselves. *See, e.g.*, *Alice*, 134 S. Ct. at 2359 (holding that limitations describing "'well-understood, routine, conventional activit[ies]' previously known to the industry" were insufficient to supply an inventive concept (quoting *Mayo*, 132 S. Ct. at 1294)); *Flook*, 437 U.S. at 590-95 (ineligible claims using mathematical equation); *SAP*, 898 F.3d at 1169 (reciting "particular methods of resampling" adds nothing inventive because those are "still mathematical operations," which are abstract).

The other claims, independent claims 1, 4, 7, 9, and 10 and dependent claims 3 and 8, recite the same elements as 6 but merely frame the claims as encoding as opposed to decoding or as a device or method as opposed to an apparatus. None of these make the claim any less abstract. Consequently, all Asserted Claims are still directed to the abstract idea of encoding, decoding, storing, processing, and selecting data. And the abstract concepts themselves "cannot supply the inventive concept." *Simio*, 983 F.3d at 1363 (quoting *BSG*, 899 F.3d at 1288).

Finally, pursuant to section (a)(2)(A) of the Order Regarding Eligibility, Defendant provides the following description of the relevant industry at the relevant time. As of the alleged priority date for the '025 patent, the relevant industry was well-developed. Video coding in general had been around for nearly a century, predictive interframe video coding had been well-known for decades, digital video algorithms had been implemented for decades and standardized since the

1980s, and all individual elements disclosed and recited in the ’025 patent were conventional, routine, and well known in the video coding industry. *See generally* Appendix A. By way of example, decoding devices were well-known. *See, e.g.*, Appendix A at 6pre. Video coding systems commonly implemented demultiplexers and used well-known techniques like entropy coding, inverse-quantization, inverse-orthogonal transformation, motion compensation, and block border motion vectors. *See, e.g.*, Appendix A at 6a, 6b, 6c, 6d, 6e, 6h. These systems also commonly incorporated memory and the ability to combine or select between data streams. *See, e.g.*, Appendix A at 6f, 6g, 6i, 6j. Indeed, none of these concepts were new or merely on the verge of development as of the alleged priority date of the ’025 patent. Furthermore, the use of Poisson’s equation in video coding was known prior to the alleged invention. *See, e.g.*, Appendix A at 6b, 6e.

That the Asserted Claims are conventional is confirmed by Defendant’s invalidity contentions involving anticipation and/or obviousness. Indeed, these elements were the conventional building blocks for conventional encoding/decoding standards that predate the ’025 patent by many years. For example, the “Background of the Invention” section in the ’025 patent concedes that “MPEG-4 AVC (which will be referred to as AVC or H.264, hereinafter),” as well as motion compensation, discrete cosine transforms, and smoothing features were commonly used in conjunction with known standards. ’025 patent at 1:23-63.

As shown in these Contentions, MPEG-4 and AVC were well-known by the early 2000s, and indeed H.261, H.263, MPEG-1, MPEG-2, MEPG-4 Visual and H.264 were all conventional and well-known for years before the earliest possible priority date of the ’025 patent. Likewise, prior art texts and patents in the field of the invention recognized that conventional “coding standards released since the early 1990s have been based on the same generic design (or model)

of a video CODEC that incorporates a motion estimation and compensation front end (sometimes described as DPCM), a transform stage and an entropy encoder." Richardson at 72. "Any CODEC that is compatible with H.261, H.263, MPEG-1, MPEG-2, MPEG-4 Visual and H.264 [(also known as Advanced Video Coding (AVC) and MPEG-4 Part 10)] has to implement a similar set of basic coding and decoding functions. *Id.* at 72, 87. The prior art is replete with examples showing that conventional encoding/decoding standards used the basic building blocks of the Asserted Claims. Al-Mualla, Ahmad, H.263, H.264. MPEG-4, Jung 768, Kim 700, Lee 982, Maeda, Miyamoto, Sekiguchi, Woods, Lee 725, Jung 207, and Tian.

For example, Richardson noted that Conventional Video/Moving-Picture Decoders used memory, motion compensation, a combiner, inverse orthogonal transforms, inverse quantizers, and entropy decoders:

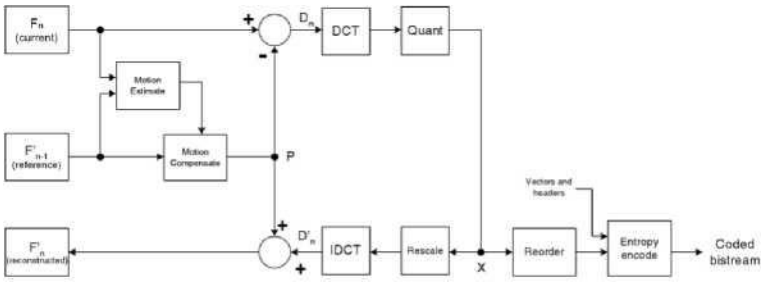

Figure 3.50 DPCM/DCT video encoder

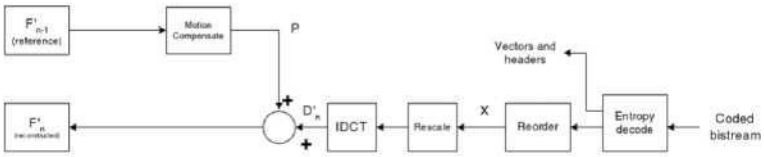

Figure 3.51 DPCM/DCT video decoder

Likewise, the Reader reference ("History of MPEG Video Compression" (2002)) shows that typical MPEG video decoders demultiplexed incoming data and, again, used entropy decoding, inverse quantization, inverse orthogonal transforms, a combiner, motion compensation, and memory (coloring in original):

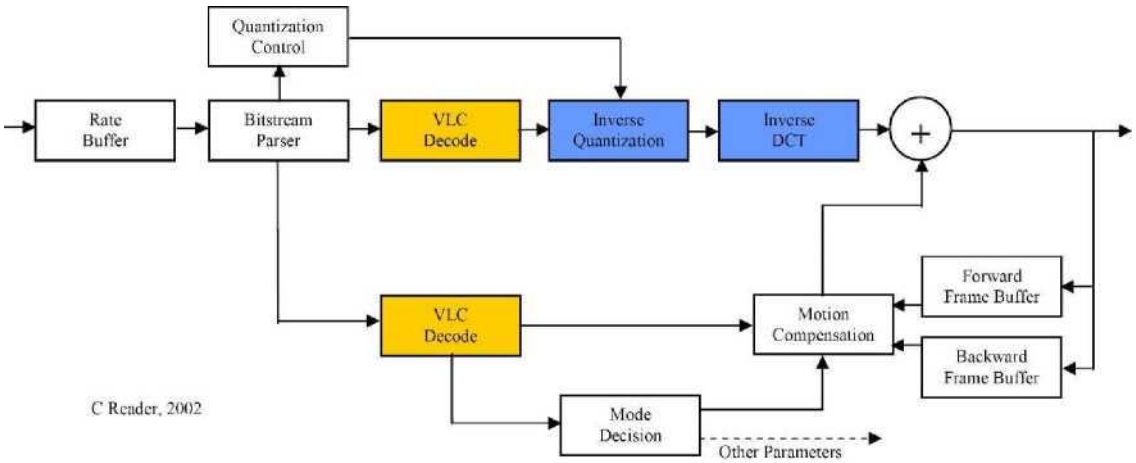

Figure 2b MPEG Video Decoder

As yet another example, the Kim 700 reference (U.S. Patent No. 6,144,700) was filed May 14, 1997 and issued November 7, 2000. Kim 700 noted that even by that early date conventional prior art included the conventional quantization, transform, motion compensation, memory, and combiner elements recited in the Asserted Claims:

FIG.1(PRIOR ART)

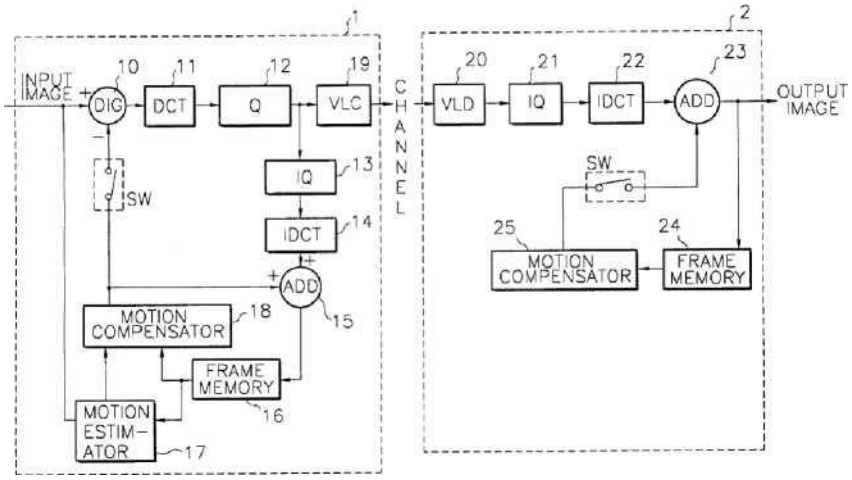

Kim 700 at FIG. 1; *see id.* at 1:37-2:52. And, by 1997, Kim 700 had also disclosed controlling and selecting the use of motion compensation where appropriate, namely where portions of an encoded/decoded block are on an edge or boundary of the block. *See id.* at 3:28-56, 4:46-67, 7:1-8:17, FIGS. 3-4.

Plaintiff's infringement theory also maps aspects of its claims—particularly those relating to border motion vector data and satisfying Poisson's Equation—to Overlapped Border Motion Compensation (OBMC). But in the Background section, the '025 patent cites to WO 2003/003749, and credits it as already having taught a "method to remedy the discontinuous situation on an MC-block border," which is the same problem as what the '025 patent purports to solve. WO 2003/003749 was published in the United States as US Pub No. 2004/0184666 (Sekiguchi) and uses the method of overlapped motion compensation (OBMC), which was well known in the art at the time the application leading to the '025 patent was filed. As explained by Sekiguchi, OBMC solves "block boundary discontinuity." Other references that describe OBMC, prior to the filing of the '025 patent, include Sekiguchi, Watanabe, Lee 896, Lee 725, Woods, H.263, H.264, Nogaki, Orchard, Kuo, Akramullah, Rajagopalon, and Pschernig. Moreover, beyond OBMC, using boundary conditions to reduce discontinuity, in general, was well-known, including the use of Poisson's Equation, as shown in Saito, Yamitani, and Shen.

The concepts of the '025 patent had been known for years and were the subject of many published articles and/or patents from around the world. The '025 patent contributed nothing beyond what was already conventional, routine, well-known technology as of the relevant time period.

B. The Asserted '303 Claims Are Ineligible Based On Representative Claim Claim 1

The Asserted Claims of the '303 patent —claims 1 and 2—are each ineligible under § 101 because they are directed to an abstract idea (at *Alice* step 1) and add nothing inventive (at *Alice* step 2). The claims are ineligible based on representative claim 1 because they are "substantially similar and linked to the same abstract idea." *Mobile Acuity*, 110 F.4th at 1290. But they are also ineligible even if considered individually, as discussed herein and in Ex. G02.

At *Alice* step 1, the ’303 patent asserted claims are directed to the abstract idea of video signal processing—specifically transmitting, receiving, and processing video streams using both basic and supplemental video image data—none of which is patent-eligible.[50] *See AI Visualize, Inc. v. Nuance Communications, Inc.*, 97 F.4th 1371 (Fed. Cir. 2024); *Hawk*, 60 F.4th at 1353; *RecogniCorp*, 855 F.3d at 1327-28.

The preamble to claim 1 of the ’303 patent recites “a video image coding data receiver comprising: a processor; and a memory unit having instructions stored which, when executed by the processor, cause the processor to perform operations.” To the extent the preamble is limiting, this is wholly drawn to the abstract idea of receiving video image coding data “that merely require[es] generic computer implementation” and “fails to transform that abstract idea into a patent-eligible invention.” *Alice*, 573 U.S. at 212.

The operations to be performed by the claimed generic processor comprises five steps: “[1] receiving basic video image coding data; [2] decoding the received basic video image coding data so as to reproduce a video image; [3] receiving supplementary video image coding data including a supplementary hierarchical picture whose coding order and display order are earlier by a factor of a group of pictures including an intra coded picture and a plurality of inter prediction coded pictures than those of a basic hierarchical picture included in the basic video image coding data, a basic hierarchy and a supplementary hierarchy being set in units of the group of pictures; [4] acquiring basic video image coding data received before supplementary video image coding data that has been received at the moment; and [5] reconstructing video image coding data from the basic video image coding data and the supplementary video image coding data.” Steps [1], [2],

[50] Given the abstract nature of the claims, the articulation of the abstract idea can include, but is not limited to, the following: encoding and decoding data, images, or video, processing data, images, or video, manipulating data, images, or video, changing the format of data, images, or video, and transmitting and receiving data, images, or video.

and [4] recite basic abstract ideas of signal processing: receiving and decoding signals and waiting for a particular time or event before doing so. Step [3] further recites receiving and decoding videos with extra gloss, adding the known algorithms of inter- and intra-prediction picture coding. Step [5] recites the abstract idea of low and high quality video displays. However, there is nothing *inventive* added when reciting these abstract ideas in the context of a processor and a memory unit: "In short, each step does no more than require a generic computer to perform generic computer functions." *Alice*, 573 U.S. at 225.

At their core, each of these limitations recite an abstract idea—such as transmitting and receiving data—or an algorithm—such as inter-prediction coding. And "[s]tringing together the claimed steps by '[a]dding one abstract idea ... to another,'" is still abstract. *PersonalWeb Technologies LLC v. Google LLC*, 8 F.4th 1310 (Fed. Cir. 2021) (quoting *RecogniCorp*, 855 F.3d at 1327); *see also, e.g.*, *AI Visualize*, 97 F.4th at 1379 (abstract claims recited detailed, but "functionally-oriented," steps for storing video data, accepting user requests for virtual views, checking location, creating image frames, and transmitting non-locally-stored data, and compiling and displaying images).

At *Alice* step 2, the operations described by claim 1 add nothing inventive to the concepts disclosed, and adding the use of a processor or memory unit does not save the claim. *Alice*, 573 U.S. at 223 ("[T]he mere recitation of a generic computer cannot transform a patent-ineligible abstract idea into a patent-eligible invention."). The specification treats those as conventional. *See Beteiro*, 104 F.4th at 1358. The Asserted Claims of the '303 patent are patent-ineligible.

The only other claim, claim 2, adds only incidental features related to encoding and transmitting data, in addition to receiving and decoding data. But these do not make the claims any less abstract. Consequently, all Asserted Claims are still directed to the abstract idea of encoding,

decoding, storing, processing, and selecting data. And the abstract concepts themselves "cannot supply the inventive concept." *Simio*, 983 F.3d at 1363 (quoting *BSG*, 899 F.3d at 1288).

Finally, pursuant to section (a)(2)(A) of the Order Regarding Eligibility, Defendant provides the following description of the relevant industry at the relevant time. As of the alleged priority date for the '303 patent, the relevant industry was well-developed. Video coding in general had been around for nearly a century, predictive interframe video coding had been well-known for decades, digital video algorithms had been implemented for decades and standardized since the 1980s, receiving, decoding, and reconstructing streams using both basic and supplemental video image data dated to at least the 1980s, and all individual elements disclosed and recited in the '303 patent were conventional, routine, and well known in the video coding industry. *See generally* Appendix B. By way of example, decoding devices were well-known. *See, e.g.*, Appendix B at 1pre. Video coding systems commonly implemented processors and used well-known techniques to decode and reconstruct video streams. *See, e.g.*, Appendix B at [1a]-[1f]. These systems also commonly incorporated memory and the ability to reconstruct the video streams using supplemental and basic video image data. *See, e.g.*, *id.* Indeed, none of these concepts was new or merely on the verge of development as of the alleged priority date of the '303 patent. Instead, these concepts had been known for years and were the subject of many published articles and/or patents from around the world. The '303 patent contributed nothing beyond what was already conventional, routine, well-known technology as of the relevant time period.

For example, the '303 patent cites to US 2011/0082945 (Myers), which describes "adaptive streaming of video" by dividing the video into chunks, where each chunk represents five seconds of video and there are multiple versions of each at different video quality (and thus bandwidth). Myers describes switching between the different chunks based on the available bandwidth. Myers

further describes that these systems have been implemented and provides examples including the Move Networks and Microsoft Smooth HDT implementations. Thus, it was well known in the art at the time the application leading to the ’303 patent was filed, that when providing adaptive bitrate steaming, the system can switch between streams of different quality levels. *See, e.g.*, Myers, Farber, Karczewicz 963, Karczewicz 2001, Karczewicz 2003, Chen 965, Richardson 2010.

Furthermore, it was well-known that coding of pictures for videos involved the use of both intra and inter prediction coded pictures. For example, the ’303 patent references the HEVC, MPEG-4, and H.264 standards. And each uses intra and inter prediction coded pictures that are arranged as Groups of Pictures (GOP). *See also* Farber, Karczewicz 963, Karczewicz 2001, Karczewicz 2003, Chen 965, Richardson 2010, Demircin, Chen, Choi, Cilli, Kesaniemi, Kimoto, Rossato, Ryu, Van Der Schaar, Senbel, Su, Sugiyama, Suh, Tillman, Ugur, Wada.

The concepts of the ’303 patent had been known for years and were the subject of many published articles, standards, and/or patents from around the world. The ’303 patent contributed nothing beyond what was already conventional, routine, well-known technology as of the relevant time period.

C. The Asserted ’995 Claims Are Ineligible Based on Representative Claim 3

The Asserted Claims of the ’995 patent—claims 1-4 and 8-11—are each ineligible under § 101 because they are directed to an abstract idea (at *Alice* step 1) and add nothing inventive (at *Alice* step 2). The claims are ineligible based on representative claim 3 because they are “substantially similar and linked to the same abstract idea.” *Mobile Acuity*, 110 F.4th at 1290. But they are also ineligible even if considered individually, as discussed herein and in Ex. G03.

At *Alice* step 1, the claims are directed to the abstract idea of creating different representations of images and choosing between them—a fundamental, longstanding, prevalent

practice for improving image quality.[51] *See, e.g.*, *Yu v. Apple Inc.*, 1 F.4th 1040, 1043 (Fed. Cir. 2021) (ineligible claims directed to abstract idea of "taking two pictures (which may be at different exposures) and using one picture to enhance the other"). Further, limiting the invention to a particular technological environment "do[es] not render an otherwise abstract concept any less abstract." *Intellectual Ventures I LLC v. Capital One Fin. Corp.*, 850 F.3d 1332, 1340 (Fed Cir. 2017).

At *Alice* step 2, the '995 patent does not contain any inventive concept. The '995 patent employs well-known components and conventional functionality (*e.g.*, a "demultiplexer," one or more "decoder[s]", one or more "encoder[s]," a "resolution-enlarger," and one or more "resolution converter[s]"). The specification treats those as conventional, *see Beteiro*, 104 F.4th at 1358, and they are like other features the Federal Circuit has found non-inventive. That conclusion is underscored by Defendant's invalidity contentions involving anticipation and/or obviousness.

The other independent claims, independent claims 1-2, 4, and 8-9, recite the same elements as 3 but merely frame the claims as encoding as opposed to decoding or as a system or recording medium, as opposed to a method. Dependent claims 10 and 11 add only incidental features related to encoding and decoding data, such as dividing a target picture into regions. But these do not make the claims any less abstract. Consequently, all Asserted Claims are still directed to the abstract idea of encoding, decoding, storing, processing, and selecting data. And the abstract concepts themselves "cannot supply the inventive concept." *Simio*, 983 F.3d at 1363 (quoting *BSG*, 899 F.3d at 1288).

[51] Given the abstract nature of the claims, the articulation of the abstract idea can include, but is not limited to, the following: encoding and decoding data, images, or video, processing data, images, or video, manipulating data, images, or video, changing the format of data, images, or video, and transmitting and receiving data, images, or video.

Finally, pursuant to section (a)(2)(A) of the Order Regarding Eligibility, Defendant provides the following description of the relevant industry at the relevant time. As of the alleged priority date for the ’995 patent, the relevant industry was well-developed. Video coding in general had been around for nearly a century, resolution conversion had been well-known for decades, digital video algorithms had been implemented for decades and standardized since the 1980s, and all individual elements disclosed and recited in the ’995 patent were conventional, routine, and well known in the video coding industry. *See generally* Appendix C. By way of example, decoding systems were well-known. *See, e.g.*, Appendix C at 2pre. Video coding systems commonly implemented demultiplexers and used well-known techniques like resolution conversion and enlargement. *See, e.g.*, Appendix C at 2b-2f. These systems also commonly incorporated memory and the ability to combine or select between data streams. *See, e.g.*, Appendix C at 2f-2h. Indeed, none of these concepts was new or merely on the verge of development as of the alleged priority date of the ’995 patent.

For example, the ’995 patent admits that super resolution enlargement was well known in the art at the time the application leading to the ’995 patent was filed, including citations to Sung, Tom, Schulz, and Stark. Thus, it was well known in the art at the time the application leading to the ’995 patent was filed, that super resolution enlargement can be used to enhance coding of low resolution videos. *See, e.g.*, Sung, Tom, Schulz, Stark, Martins, Sesai, Fogg 236, Nagumo 519, Schreiber, Wedi 380, Suzuki 952, Margulis 807, Keren.

In addition, the ’995 patent admits that hierarchical encoding with a base layer and enhancement layers was well known in the art at the time the application leading to the ’995 patent was filed, including citations to standards including MPEG-4 SVC. Thus, it was well known in the art at the time the application leading to the ’995 patent was filed, that the encoding and decoding

of such base and enhancement layers may involve resolution conversion to certain desired resolutions, and that such conversion may include super resolution enlargement. *See, e.g.*, Sakazume, Sung, Tom, Schulz, Stark, Martins, Segall, Sesai, Fogg 236, Nagumo 519, Schreiber, Wedi 380, Suzuki 952, Margulis 807, Ong, He, Wang, Yagasaki, Nakemura, Schwarz, Tsai, Garrido 853, Lim 000, Garrido 868, Slinger, Gu, Lim 206, Kondo, Hannuksela. In particular, it was understood that resolution conversion could be used to generate any output resolution required. *See, e.g.*, Martins.

The concepts of the ’995 patent had been known for years and were the subject of many published articles, standards, and/or patents from around the world. The ’995 patent contributed nothing beyond what was already conventional, routine, well-known technology as of the relevant time period.

D. The Asserted ’448 Claims Are Ineligible Based on Representative Claim 1

The Asserted Claims of the ’448 patent—claims 1-3—are each ineligible under § 101 because they are directed to an abstract idea (at *Alice* step 1) and add nothing inventive (at *Alice* step 2). The claims are ineligible based on representative claim 1 because they are “substantially similar and linked to the same abstract idea.” *Mobile Acuity*, 110 F.4th at 1290. But they are also ineligible even if considered individually, as discussed herein and in Ex. G04.

At *Alice* step 1, the claims are directed to the abstract idea of creating different representations of images and choosing between them—a fundamental, longstanding, prevalent practice for improving image quality.[52] *See, e.g.*, *Yu v. Apple Inc.*, 1 F.4th 1040, 1043 (Fed. Cir. 2021) (ineligible claims directed to abstract idea of “taking two pictures (which may be at different

[52] Given the abstract nature of the claims, the articulation of the abstract idea can include, but is not limited to, the following: encoding and decoding data, images, or video, processing data, images, or video, manipulating data, images, or video, changing the format of data, images, or video, and transmitting and receiving data, images, or video.

exposures) and using one picture to enhance the other"). Further, limiting the invention to a particular technological environment "do[es] not render an otherwise abstract concept any less abstract." *Intellectual Ventures I LLC v. Capital One Fin. Corp.*, 850 F.3d 1332, 1340 (Fed Cir. 2017). Under *Alice* step 2, the '448 patent does not contain any inventive concept. The '448 patent employs well-known components and conventional functionality (*e.g.*, a one or more "encoder[s]", a "resolution-enlarger," and a "resolution converter"). The specification treats those as conventional, *see Beteiro*, 104 F.4th at 1358, and they are like other features the Federal Circuit has found non-inventive. That conclusion is underscored by Defendant's invalidity contentions involving anticipation and/or obviousness.

The other independent claims, independent claims 2 and 3, merely omit some elements present in claim 1. This does not make the claims any less abstract. Consequently, all Asserted Claims are still directed to the abstract idea of encoding, decoding, storing, processing, and selecting data. And the abstract concepts themselves "cannot supply the inventive concept." *Simio*, 983 F.3d at 1363 (quoting *BSG*, 899 F.3d at 1288).

Finally, pursuant to section (a)(2)(A) of the Order Regarding Eligibility, Defendant provides the following description of the relevant industry at the relevant time. As of the alleged priority date for the '448 patent, the relevant industry was well-developed. Video coding in general had been around for nearly a century, resolution conversion had been well-known for decades, digital video algorithms had been implemented for decades and standardized since the 1980s, and all individual elements disclosed and recited in the '448 patent were conventional, routine, and well known in the video coding industry. *See generally* Appendix C. By way of example, encoding systems were well-known. *See, e.g.*, Appendix C at 1pre, 1a. Video coding systems commonly implemented resolution conversion and enlargement. *See, e.g.*, Appendix C at 1b-1d. Indeed, none

of these concepts was new or merely on the verge of development as of the alleged priority date of the ’448 patent.

For example, the ’448 patent admits that super resolution enlargement was well known in the art at the time the application leading to the ’448 patent was filed, including citations to Sung, Tom, Schulz, and Stark. Thus, it was well known in the art at the time the application leading to the ’448 patent was filed, that super resolution enlargement can be used to enhance coding of low resolution videos. *See, e.g.*, Sung, Tom, Schulz, Stark, Martins, Sesai, Fogg 236, Nagumo 519, Schreiber, Wedi 380, Suzuki 952, Margulis 807, Keren.

In addition, the ’448 patent admits that hierarchical encoding with a base layer and enhancement layers was well known in the art at the time the application leading to the ’448 patent was filed, including citations to standards including MPEG-4 SVC. Thus, it was well known in the art at the time the application leading to the ’448 patent was filed, that the encoding and decoding of such base and enhancement layers may involve resolution conversion to certain desired resolutions, and that such conversion may include super resolution enlargement. *See, e.g.*, Sakazume, Sung, Tom, Schulz, Stark, Martins, Segall, Sesai, Fogg 236, Nagumo 519, Schreiber, Wedi 380, Suzuki 952, Margulis 807, Ong, He, Wang, Yagasaki, Nakemura, Schwarz, Tsai, Garrido 853, Lim 000, Garrido 868, Slinger, Gu, Lim 206, Kondo, Hannuksela. In particular, it was understood that resolution conversion could be used to generate any output resolution required. *See, e.g.*, Martins.

The concepts of the ’448 patent had been known for years and were the subject of many published articles, standards, and/or patents from around the world. The ’448 patent contributed nothing beyond what was already conventional, routine, well-known technology as of the relevant time period.

E. The Asserted ’101 Claims Are Ineligible Based on Representative Claim 1

The Asserted Claims of the ’101 patent—claims 1-5 and 7—are each ineligible under § 101 because they are directed to an abstract idea (at *Alice* step 1) and add nothing inventive (at *Alice* step 2). The claims are ineligible based on representative claim 1 because they are “substantially similar and linked to the same abstract idea.” *Mobile Acuity*, 110 F.4th at 1290. But they are also ineligible even if considered individually, as discussed herein and in Ex. G05.

At *Alice* step 1, the claims are directed to the abstract idea of conditionally transferring data from one location to another and keeping track of where that data is using a list. *See, e.g.*, *AI Visualize*, 97 F.4th at 1375-79 (ineligible claims for generating 3D visualizations using local and remote data); *Sanderling Management Ltd. v. Snap Inc.*, 65 F.4th 698 (Fed. Cir. 2023) (ineligible claims for distributing software functionality based on location); *Intellectual Ventures I LLC v. Erie Indemnity Company*, 850 F.3d 1315, 1329-30 (Fed. Cir. 2017) (claims for accessing user resources using pointers); (ineligible claims for “maintaining a list of network locations” and retrieving streaming content).[53] At *Alice* step 2, the claim elements add nothing inventive to the abstract concept, which was well-known and conventional in the prior art. The specification treats those additional elements as conventional, *see Beteiro*, 104 F.4th at 1358, and they are like other features the Federal Circuit has found non-inventive.

Independent claim 7 largely mimics claim 1, but as a method. As explained in the accompanying chart, the representative claim 1 of the ’101 patent is abstract and patent ineligible. The claims are generic, abstract instructions for functions implemented with conventional hardware and known in the art, such as conditionally moving data around and keeping track of

[53] Given the abstract nature of the claims, the articulation of the abstract idea can include, but is not limited to, the following: transferring data according to predetermined conditions, transferring data between internal/local storage and network/remote storage, transferring data between internal or network storage to a media player, and keeping track of where the data is stored in a list format or a tree format.

where the data is located using a list. *See Affinity Labs of Texas, LLC v. DirecTV, LLC*, 838 F.3d 1253, 1257-58 (Fed. Cir. 2016) ("The 'abstract idea' step of the inquiry calls upon us to look at the 'focus of the claimed advance over the prior art' to determine if the claim's 'character as a whole' is directed to excluded subject matter.")

The other claims, dependent claims 2-5, add only incidental features about transferring data from one location to another and keeping track of that information in a list. For example, dependent claim 4 adds some ambiguous detail about a "predetermined condition" causing data to be transferred back to the original location after it has been transferred. Other dependent claims add other ambiguous details about transferring data from internal storage to network storage and using lists to keep track of whether the data is currently stored in internal storage or network storage. But none of these make the claim any less abstract. Consequently, all Asserted Claims are still directed to the abstract idea of conditionally transferring data from one location to another and keeping track of where that data is using a list. And the abstract concepts themselves "cannot supply the inventive concept." *Simio*, 983 F.3d at 1363 (quoting *BSG*, 899 F.3d at 1288).

Finally, pursuant to section (a)(2)(A) of the Order Regarding Eligibility, Defendant provides the following description of the relevant industry at the relevant time. As of the alleged priority date for the '101 patent, the relevant industry was well-developed. As of the priority date of the '101 patent, a problem in the field was that with growing sizes of media data, HDD (hard disk devices) portable players had limited storage space. So, if a user wanted to add more media and the device had insufficient capacity free, stored content would need to be deleted in order to store further new contents. *See* '101 patent at 1:47-2:11. As of the priority date, it was well known in the field that one solution would be to transfer data from local storage to network storage, which would save and optimize space on the portable player local storage. This allowed a user to continue

building a larger media library and share/stream media among multiple networked devices, all without the need to delete data to make room for more data. In addition, review of the ’101 patent specification and the art reveals the need in the field of being able to keep track of where each piece of media or data was stored—in internal storage or network storage—then, displaying this information in a list, or more specifically, a tree format. *See* ’101 patent at 5:53-67.

The ’101 patent also admits that networked media services for managing media content over a network was well known in the art at the time the application leading to the ’101 patent was filed. For example, the ’101 patent also specifically discusses Digital Living Network Alliance (“DLNA”) in the “Background Art” section of the patent, specifically explaining how the home network server device is set up to store, share, and play digital contents to various network players in the home network. *See, e.g.*, ’101 patent at 1:16-35. The DLNA standards discuss how digital media can be transferred from one location to another (internal storage to network storage), along with how that media can be shared across different media players in the network. Transferring data from one location to another was well known and conventional. Lists keeping track of where data is stored was well known and conventional. A tree structure for a list was well known and conventional. Lastly, streaming media from network storage (*e.g.*, online) to a media player (*e.g.*, mobile device) is directed to an abstract idea and is also well known and conventional. Therefore, all of the features identified implement routine, conventional, well-understood methods that can be performed by conventional computer hardware.

The concepts of the ’101 patent had been known for years and were the subject of many published articles, standards, and/or patents from around the world. The ’101 patent contributed nothing beyond what was already conventional, routine, well-known technology as of the relevant time period.

F. The Asserted ’891 Claims Are Ineligible

1. The Asserted ’891 Claims Are Ineligible Under *Alice* Based On Representative Claim 1

The Asserted Claims of the ’891 patent—claims 1-4, 6, and 8-9—are each ineligible under § 101 because they are directed to an abstract idea (at *Alice* step 1) and add nothing inventive (at *Alice* step 2). The claims are ineligible based on representative claim 1 because they are “substantially similar and linked to the same abstract idea.” *Mobile Acuity*, 110 F.4th at 1290. But they are also ineligible even if considered individually, as discussed herein and in Ex. G06.

At *Alice* step 1, the claims are directed to the abstract ideas of judging and managing quality based upon the presence of errors.[54] *See, e.g.*, *Alice Corp. Pty. Ltd. v. CLS Bank Intern.*, 573 U.S. 208, 216 (2014); *Intell. Ventures I LLC v. Symantec Corp.*, 838 F.3d 1307, 1313-1322 (Fed. Cir. 2016). Those ideas are abstract, as they relate to a fundamental long prevalent data-processing practice. At *Alice* Step 2, the ’891 patent does not add any inventive concept to the abstract ideas. The abstract concepts themselves cannot supply the inventive concept. *See Simio*, 983 F.3d at 1363; *BSG*, 899 F.3d at 1288. The ’891 patent employs well-known components and conventional functionality (*e.g.*, “symbol judging means,” “communication judging means,” “data changing means”) to process signals and bits (*e.g.*, “obtaining a baseband signal” “identifies the number of redundant bits having the predetermined value”). The specification treats those as conventional, *see Beteiro*, 104 F.4th at 1358, and they are like other features the Federal Circuit has found

[54] Given the abstract nature of the claims, the articulation of the abstract idea can include, but is not limited to, the following: judging quality, judging communication quality, managing quality, managing communication quality, judging and managing communication quality, judging and managing communication quality of a transmission channel, judging communication quality of a transmission channel based upon the presence of errors, judging and managing communication quality of a transmission channel based upon the presence of errors.

non-inventive. That conclusion is confirmed by Defendant's Contentions, *e.g.*, involving anticipation and/or obviousness.

The claim elements add nothing inventive to the aforementioned abstract concept, which was well-known and conventional in the prior art. Independent claims 8 and 9 largely mimic claim 1. As explained in the accompanying chart, the representative claim 1 of the '891 patent is abstract and patent ineligible. The claims are generic, abstract instructions for mathematical functions known in the art for judging and managing communication quality, such as error detection, error correction, and error concealment, and claim the abstract idea of judging and managing quality based upon the presence of errors. *Affinity Labs of Texas, LLC v. DirecTV, LLC*, 838 F.3d 1253, 1257-58 (Fed. Cir. 2016) ("The 'abstract idea' step of the inquiry calls upon us to look at the 'focus of the claimed advance over the prior art' to determine if the claim's 'character as a whole' is directed to excluded subject matter.")

The other claims, dependent claims 2-4 and 6, add only incidental features about managing quality, and fail to confer eligibility. For example, the dependent claims add some ambiguous detail about the "predetermined change" if a "predetermined condition" is not satisfied (*e.g.*, "substantially destroying" or "replacing" data). But that does not make the claim any less abstract. Consequently, all Asserted Claims are directed to the abstract idea of judging quality and managing quality based upon the presence of errors.

Finally, pursuant to section (a)(2)(A) of the Order Regarding Eligibility, Defendant provides the following description of the relevant industry at the relevant time. As of the alleged priority date for the '891 patent, the relevant industry was well-developed. Various methods for judging and managing communication quality (including error detection, error detection and correction, and error detection and concealment) and detecting errors and correcting errors in a

transmission channel were well known. MacKay at 4-5; *see also* MacKay at 5-21, 122-23, 177-190, 206-227, 557-573, 574-581, 582-587. Review of the ’891 specification and the art reveals that the ’891 claims merely abstractly recite instructions for mathematical methods of judging and managing quality that were well known in the art. *See also* MacKay at 5-21, 122-23, 177-190, 206-227, 557-573, 574-581, 582-587. ACT-GOOGLE00007901; Robert G. Gallager, Low Density Parity Check Codes (D.Sc Thesis, MIT 1960); Robert G. Gallager, Low Density Parity-Check Codes (1963). For example, CRC and FEC were well known, routine, and conventional methods of judging and managing communication quality. ’891 patent at 1:27-35, 2:1-6.

The ’891 patent also admits that “technologies for transmitting voice data” (*e.g.*, using a vocoder) were well known in the art at the time the application leading to the ’891 patent was filed. ’891 patent at 1:14-20. For example, the ’891 specifically identifies the Personal Digital Cellular Telecommunication System Standard (RCR STD-27 Rev. J) by the Association of Radio Industries and Business in the “Background Art” section of the patent as describing conventional techniques related to transmitting voice data. *Id.* The background identifies conventional techniques for error detection and correction in the art at the time the application leading to the ’891 patent was filed, such as cycle redundancy check (CRC) codes and forward error correction (FEC). ’891 patent at 1:27-35, 2:1-6. The abstract ideas of judging and managing quality based upon the presence of errors are used in conventional CRC and FEC methods. For example, the abstract idea of obtaining and judging data (*e.g.*, demodulating signals into symbols and judging the content of those symbols) using “a well known detection circuit” was conventional. ’891 patent at 9:5-12. Indeed, the patent refers to several known and used techniques throughout the specification. *See e.g.*, ’891 patent at 12:11-19. Additionally, comparing information to check for an error (*e.g.*, comparing a

bit value to a predetermined value) was conventional. Changing data if there is an error (*e.g.*, if a predetermined condition is not met) was conventional. Therefore, all of the features identified implement routine, conventional, well-understood methods.

The concepts of the ’891 patent had been known for years and were the subject of many published articles, standards, and/or patents from around the world. The ’891 patent contributed nothing beyond what was already conventional, routine, well-known technology as of the relevant time period.

2. Claim 9 Is Ineligible As It is Not Directed To Any of the Statutory Category

Claim 9 claims “[a] computer program causing a computer to execute the steps of . . .” The claimed “computer program” is not a “process, machine, manufacture, or composition of matter.” 35 U.S.C. § 101. *See, e.g.*, *In re Nuijten*, 500 F.3d 1346, 1352-1357 (Fed. Cir. 2007); *Mentor Graphics Corp. v. EVE-USA, Inc.*, 851 F.3d 1275, 1294-95 (Fed. Cir. 2017); *Allvoice Devs. US, LLC v. Microsoft Corp.*, 612 F. App’x 1009, 1018 (Fed. Cir. 2015); MPEP § 2106 (9th ed. Mar. 2014). The claimed “computer program” covers transitory embodiments and is not directed to statutory subject matter. For example, the “computer program according to a third aspect of the invention causes a computer to perform: a symbol judging step . . . and a communication quality judging step . . .” ’891 patent at 4:3-24. The ’891 specification recites that

> these programs may be uploaded to a BBS on the communication lines to distribute them through the communication lines, or carrier waves may be modulated by a signal representative of these programs, resultant modulated waves may be transmitted, and the modulated waves may be demodulated by a device that has received the modulated waves to restore the programs.

‘891 patent at 15:8-14; *see also* 14:53-15:25. Therefore, the claimed “computer program” covers transitory media, which is not patent eligible.

V. ACCOMPANYING DOCUMENT PRODUCTION

Pursuant to P.R. 3-4(a), based on its investigation to date Defendant has produced and/or is producing documentation within its possession, custody, or control "sufficient to show the operation of any aspects or elements" of the Accused Instrumentalities identified by ACT in its Infringement Contentions. Also pursuant to P.R. 3-4(a), Defendant has made source code relating to the Accused Instrumentalities available for inspection at its counsel's Silicon Valley office. By producing or making available the materials as required by P.R. 3-4(a), Defendant does not treat any of the accused products as representative.

Pursuant to P.R. 3-4(b), Defendant is producing, or making available for inspection, each item of prior art identified pursuant to P.R. 3–3(a) and (b) which does not appear in the file history of the Asserted Patents, and all prior art documents identified to date. These prior art references and corroborating evidence are cited in attached invalidity claim charts in Appendices A-F. Defendant will also make available for inspection any prior art systems or devices upon request to the extent Defendant acquires such systems or devices. References that were cited during prosecution of the Asserted Patents may not be contained in Defendant's production as they are not required to be under the local patent rules. Defendant's search for prior art references, additional documentation, and/or corroborating evidence concerning prior art systems and devices is ongoing. Accordingly, Defendant reserves the right to supplement its production as Defendant obtains additional prior art references, documentation, and/or corroborating evidence concerning invalidity during the course of discovery.

Defendant may also supplement its P.R. 3-4 document production pursuant to the Patent Rules and the Orders of the Court. Defendant will further comply with its obligations under P.R. 3-4(a) pursuant to the Court's Discovery Order (D.I. 26).

Respectfully submitted,

Dated April 11, 2025

/s/ Patricia Young

Patricia Young
LATHAM & WATKINS LLP
1271 Avenue of the Americas
New York, NY 10020
Tel: (212) 906-1200
Fax: (212) 751-4864
patricia.young@lw.com

Douglas E. Lumish
Linfong Tzeng
LATHAM & WATKINS LLP
140 Scott Drive
Silicon Valley, CA 94025
Tel: (650) 328-4600
Fax: (650) 463-2600
doug.lumish@lw.com
linfong.tzeng@lw.com

Joseph H. Lee
LATHAM & WATKINS LLP
650 Town Center Drive, 20th Floor
Costa Mesa, CA 92626
Tel: (714) 540-1235
Fax: (714) 755-8290
joseph.lee@lw.com

Michael E. Jones (State Bar No. 10929400)
mikejones@potterminton.com
Shaun W. Hassett (State Bar No. 24074372)
shaun.hassett@potterminton.com
POTTER MINTON, P.C.
102 North College, Suite 900
Tyler, Texas 75702
(903) 597-8311
(903) 593-0846 facsimile

Attorneys for Defendant

[redacted]

CERTIFICATE OF SERVICE

The undersigned hereby certifies that the foregoing document was served by email on all counsel of record on April 11, 2025.

/s/ Joseph Lee