US006478037B2

(12) **United States Patent**
Tung

(10) **Patent No.: US 6,478,037 B2**
(45) **Date of Patent: Nov. 12, 2002**

(54) **FOLDABLE SUNSHADE WITH A TILTABLE CANOPY**

(76) Inventor: **Pai Tung**, No. 2, Cheng Shing Road, San Min, Kaohsiung (TW)

(*) Notice: Subject to any disclaimer, the term of this patent is extended or adjusted under 35 U.S.C. 154(b) by 0 days.

(21) Appl. No.: **09/753,469**

(22) Filed: **Jan. 3, 2001**

(65) **Prior Publication Data**

US 2002/0083969 A1 Jul. 4, 2002

(51) **Int. Cl.**[7] **A45B 11/00**
(52) **U.S. Cl.** **135/21**; 135/20.1
(58) **Field of Search** 135/25.1, 15.1, 135/90, 29, 96, 21, 98, 20, 20.1, 31–32, 38–39, 21.3

(56) **References Cited**

U.S. PATENT DOCUMENTS

5,387,048 A * 2/1995 Kuo 135/25.1
6,105,594 A * 8/2000 Diaz 135/16
6,152,156 A * 11/2000 Tung 135/21
6,220,261 B1 * 4/2001 Glatz 135/20.3
6,244,286 B1 * 6/2001 Russo 135/128

* cited by examiner

Primary Examiner—Beth A. Stephan
(74) *Attorney, Agent, or Firm*—Alan D. Kamrath; Rider, Bennett, Egan & Arundel

(57) **ABSTRACT**

A sunshade includes a supporting rod, a canopy support frame, and a canopy. An adjusting sleeve is slidably mounted around the supporting rod. A holding sleeve is pivotally connected to an upper end of the supporting rod. An arcuate tube is slidably extended through the holding sleeve. An elbow is mounted to a first end of the arcuate tube and a reel is mounted to a second end of the arcuate tube. A connecting rod is connected between the second end of the arcuate tube and the adjusting sleeve. An anchor is provided to be releasably engaged in an anchor room in the elbow to reliably retain the canopy support frame in a desired tilting angle relative to the supporting rod. The arcuate tube and the supporting rod can be folded to further reduce the overall volume of the sunshade.

20 Claims, 13 Drawing Sheets

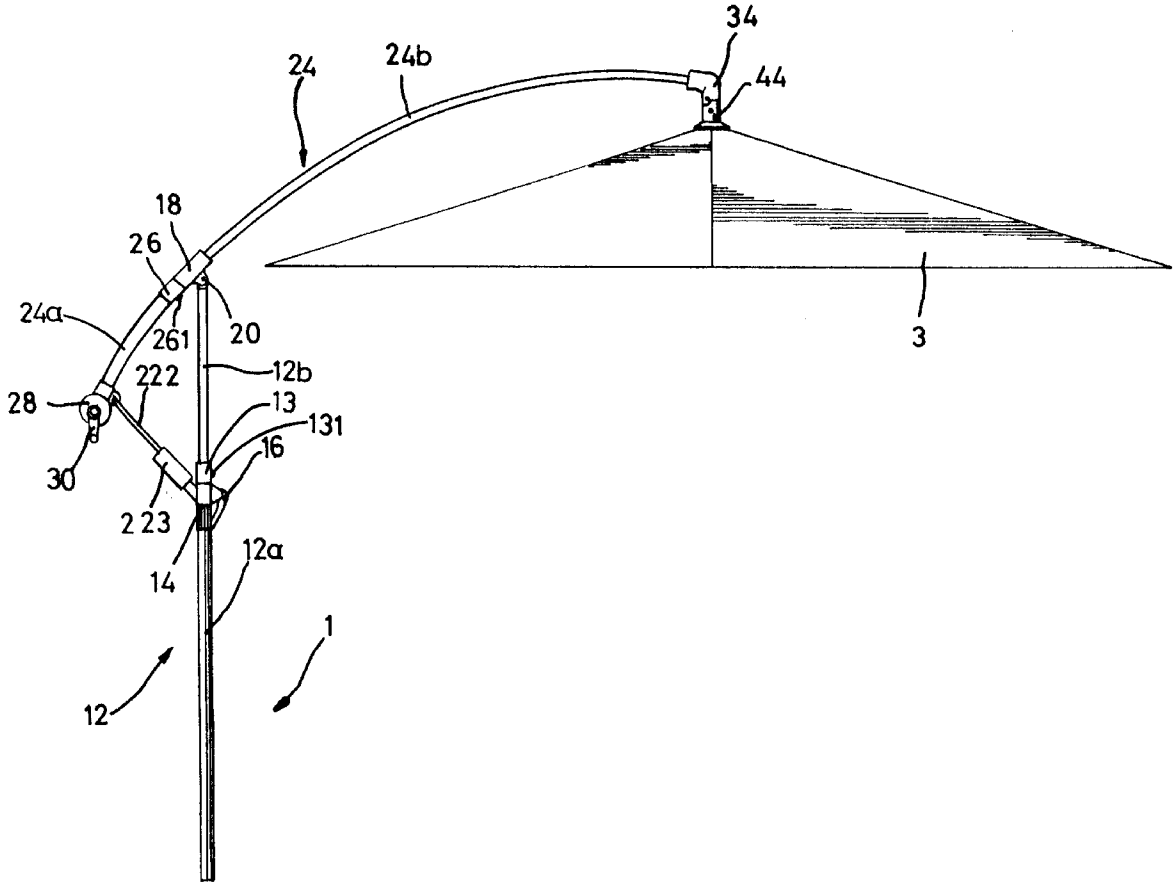

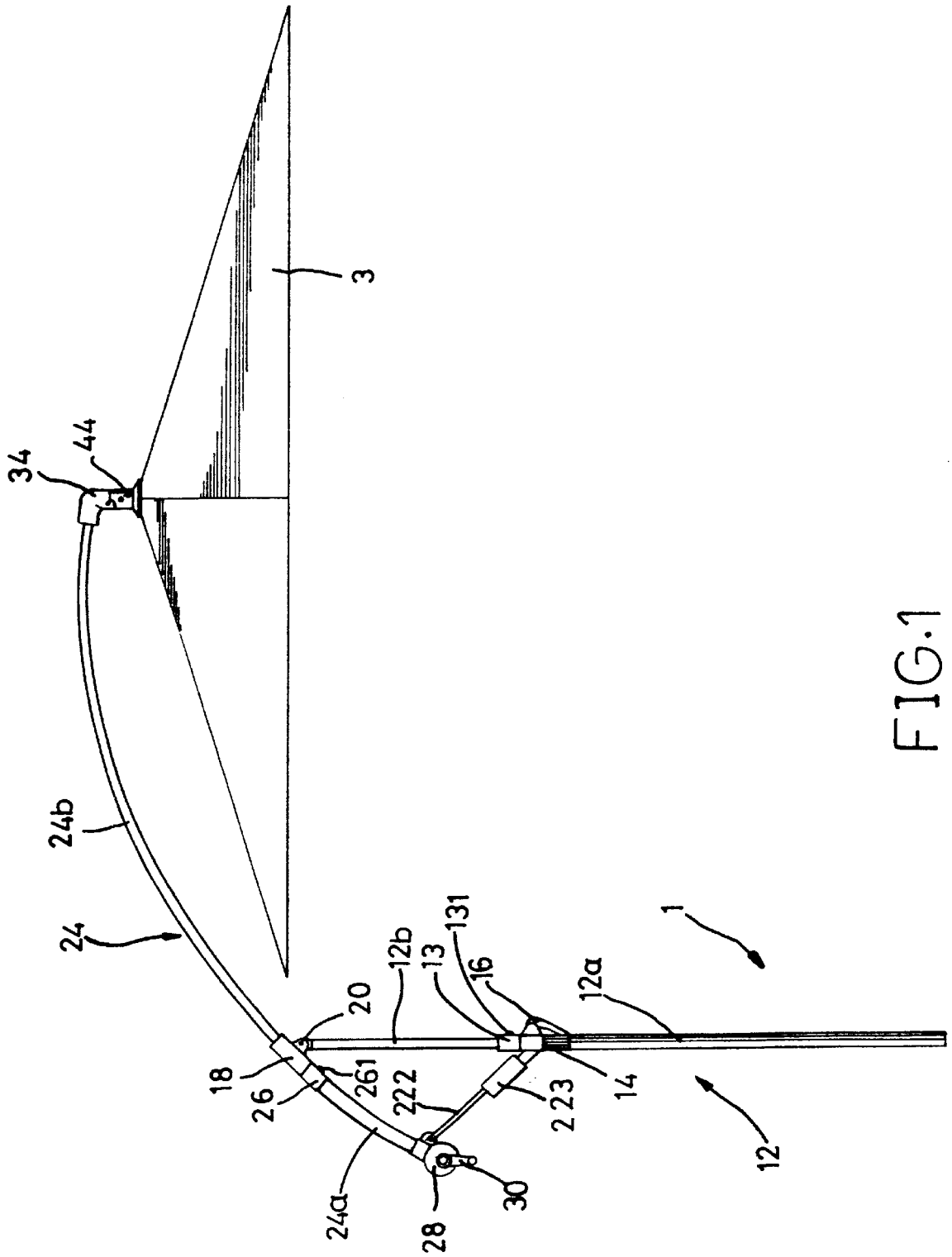
3
34
44
24b
24
20
12b
13
131
16
12a
1
18
26
261
222
223
14
12
24a
28
30

FIG.1

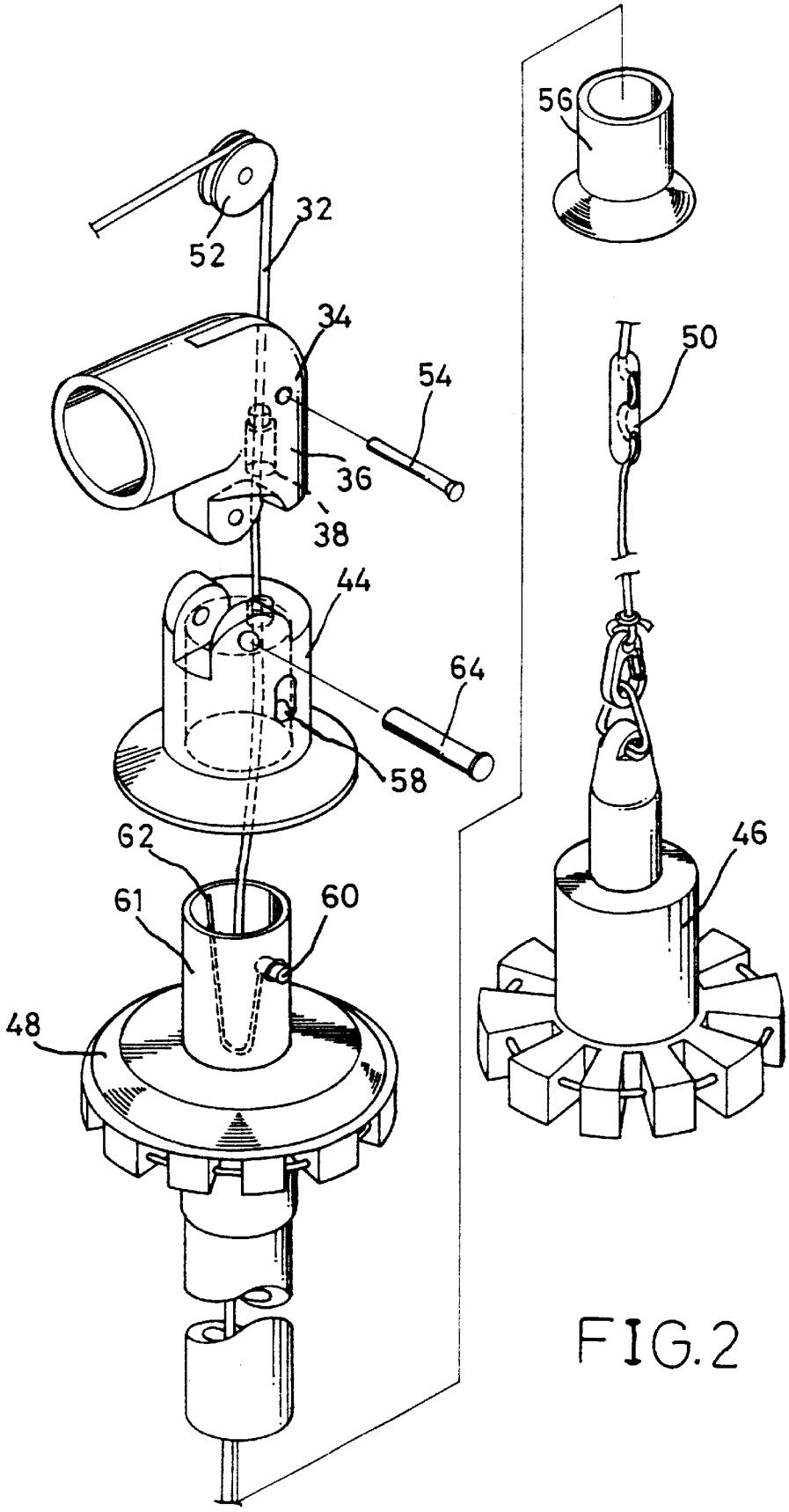

FIG.2

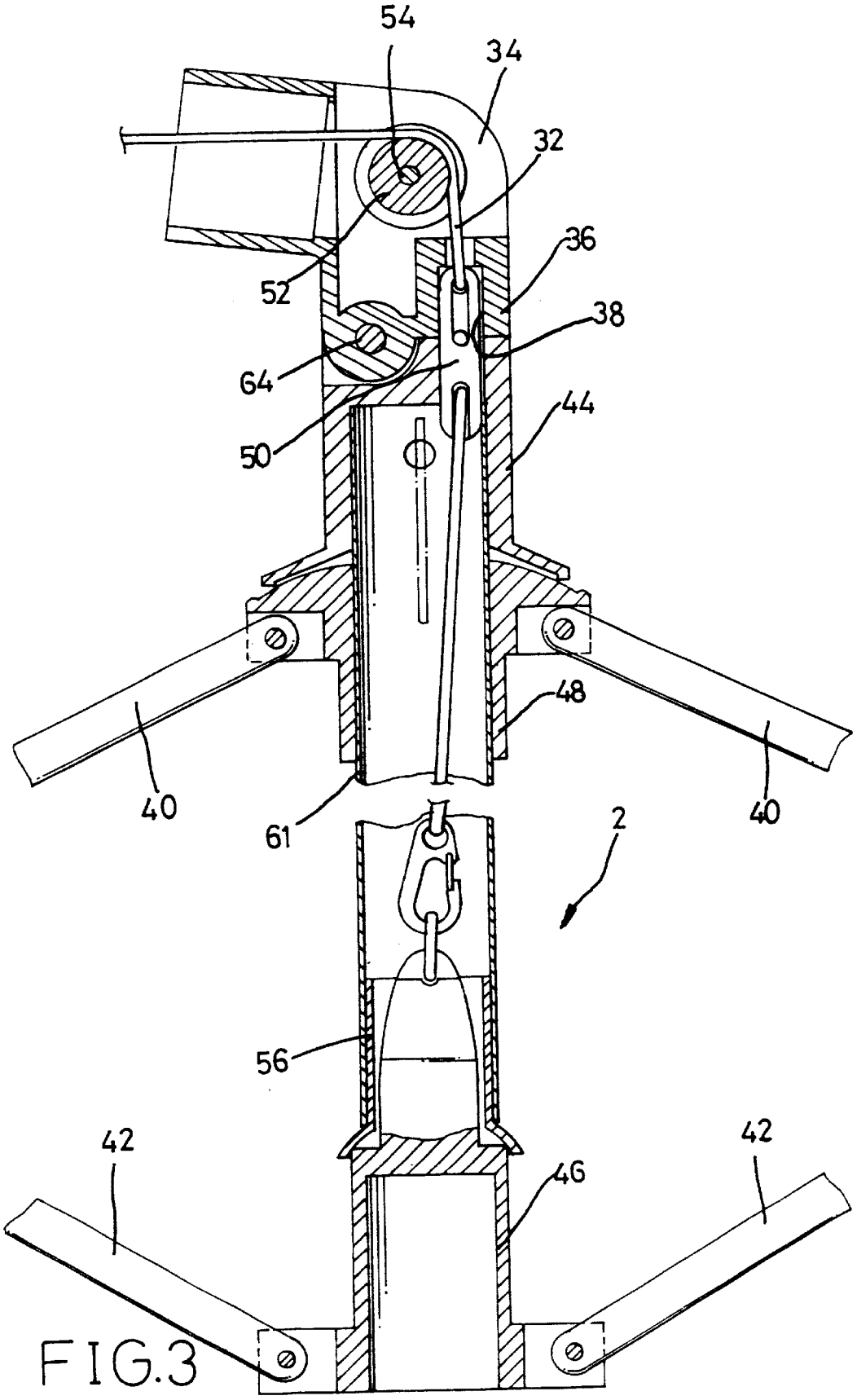

FIG.3

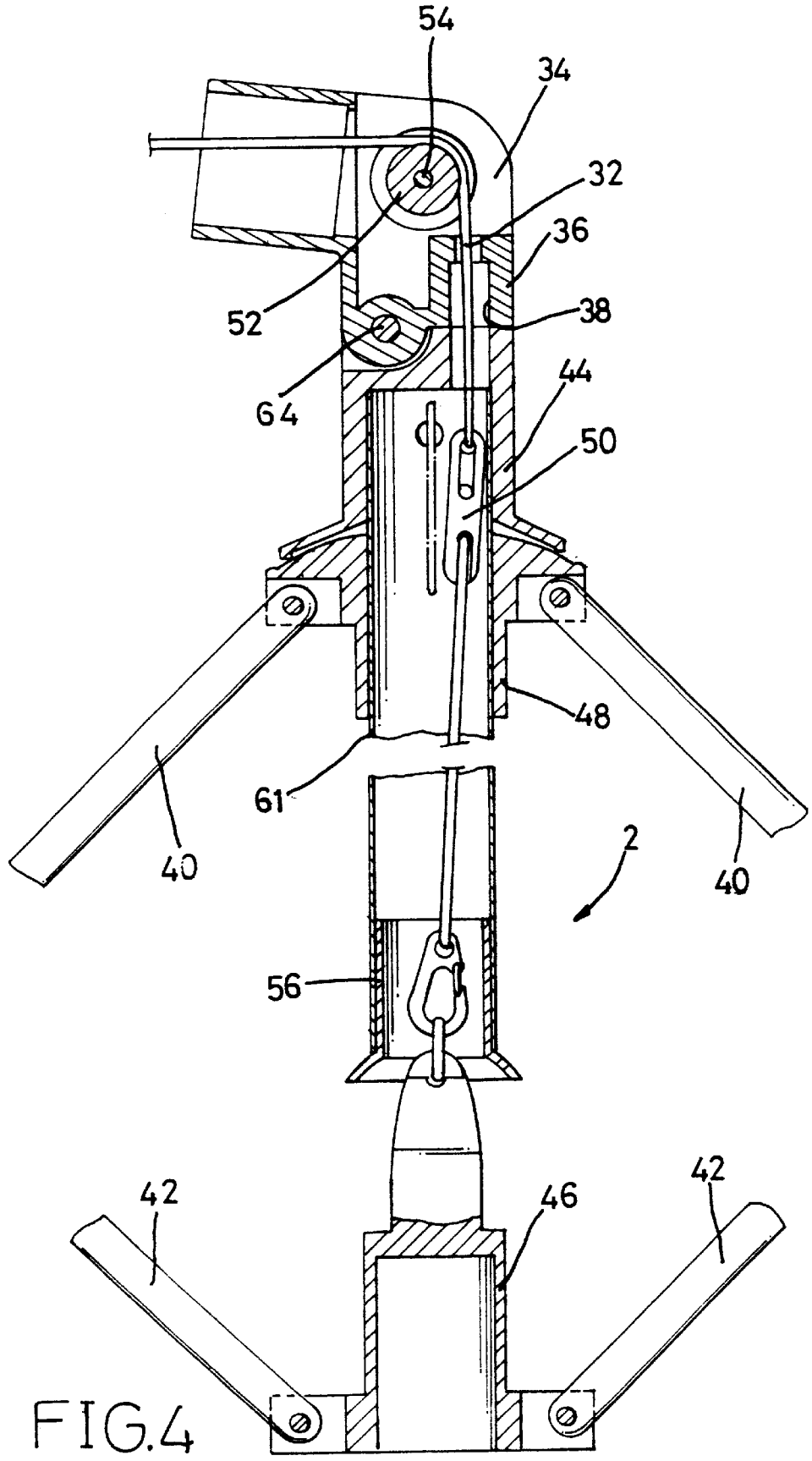

FIG.4

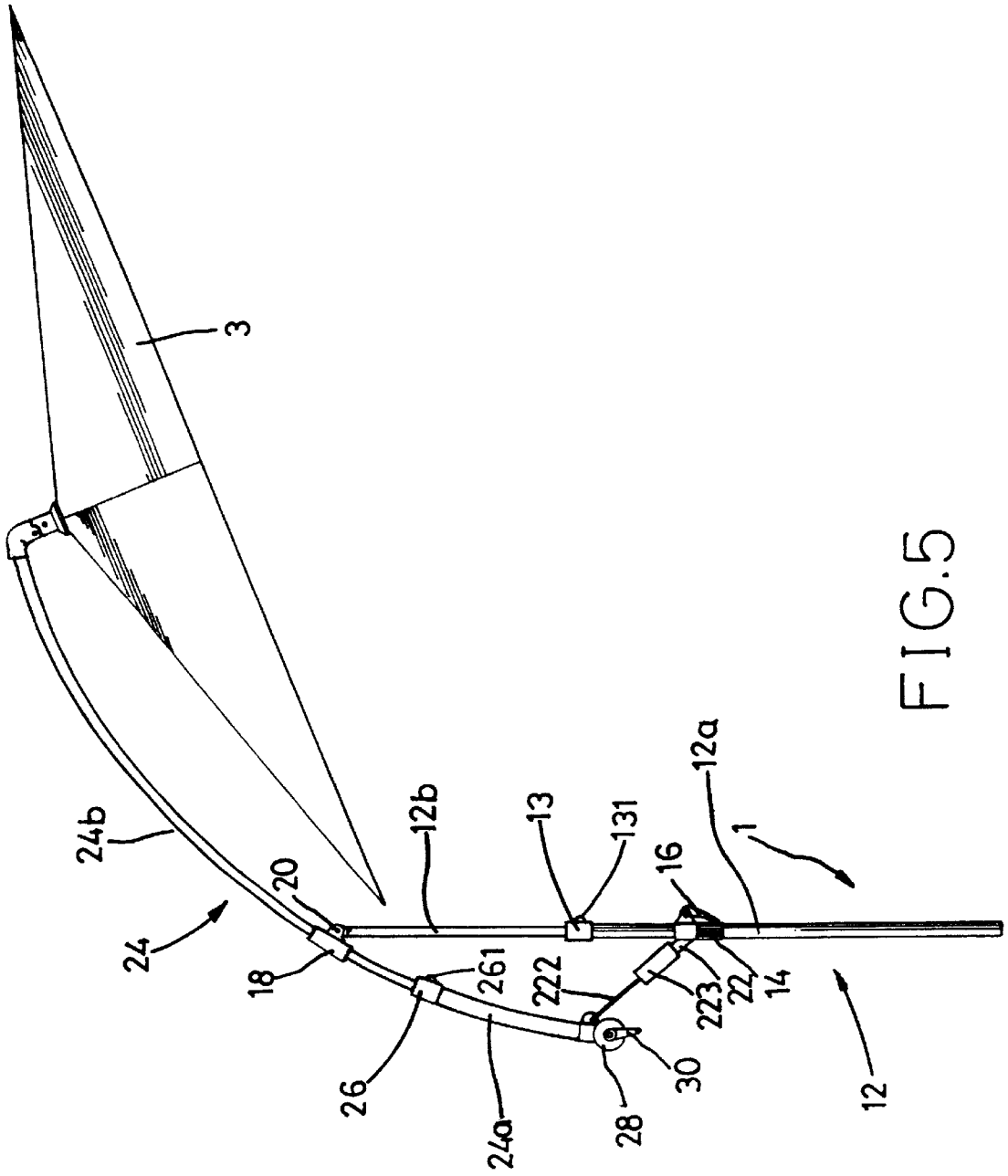

FIG.5

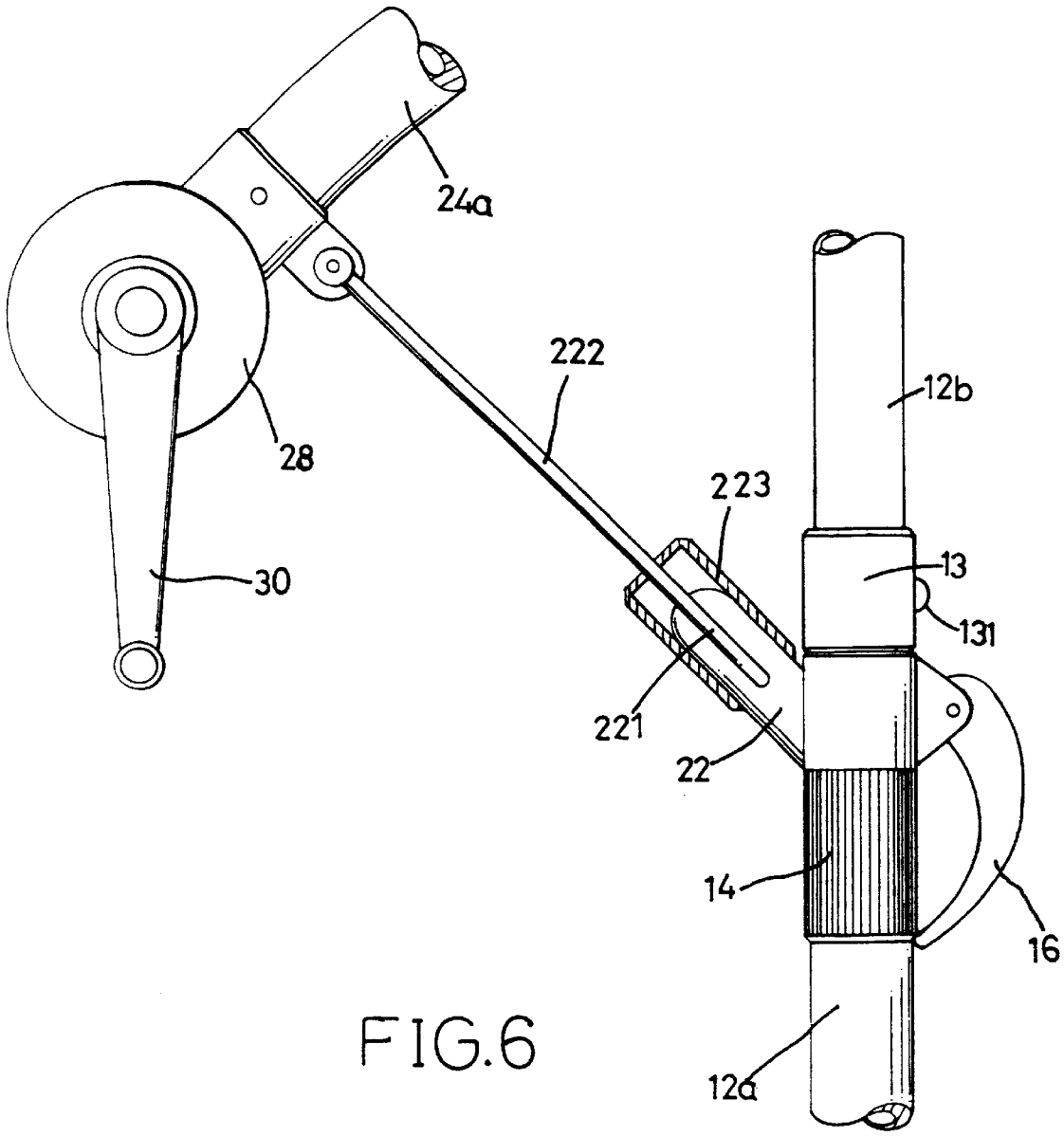

FIG.6

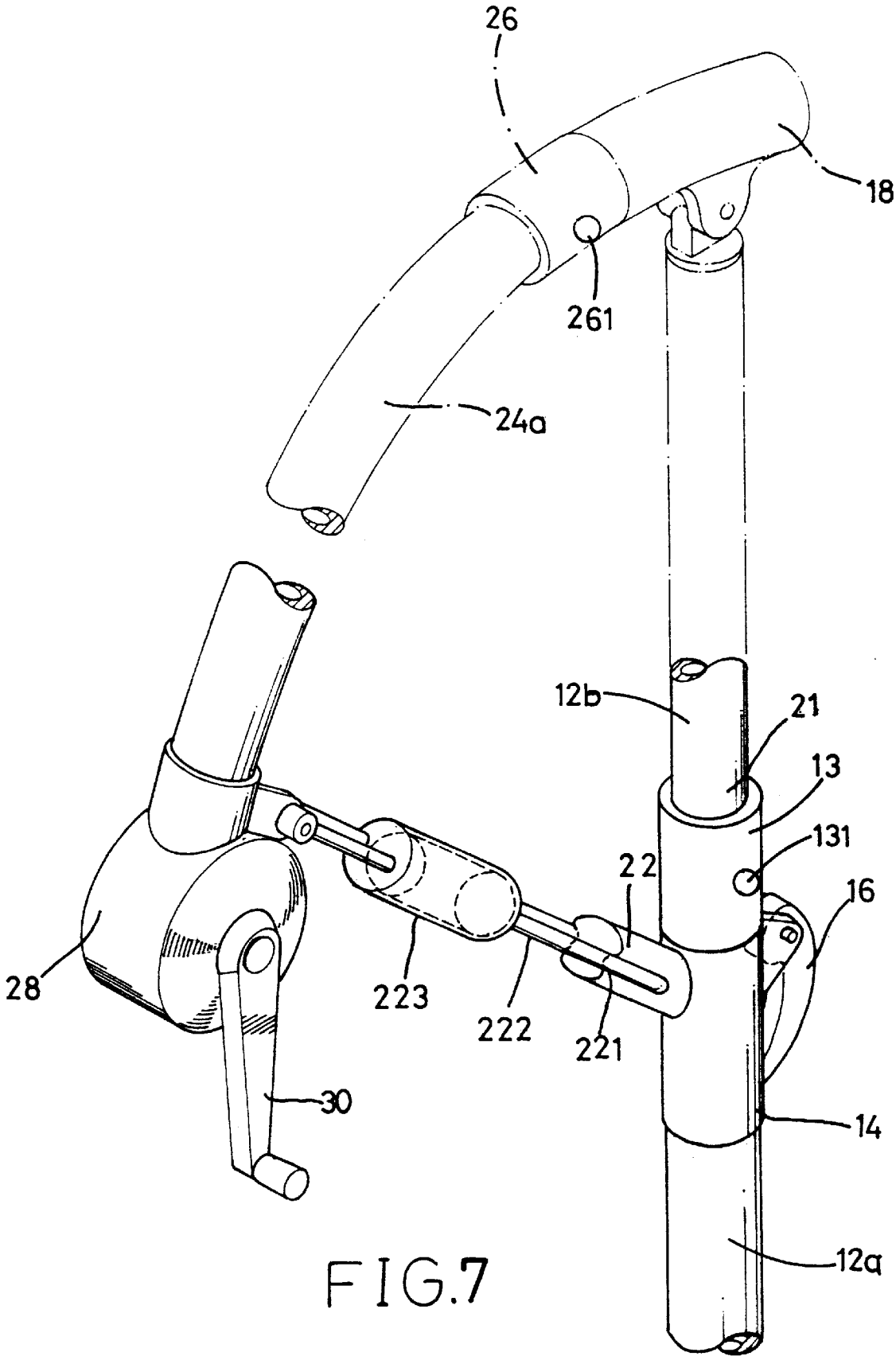

FIG.7

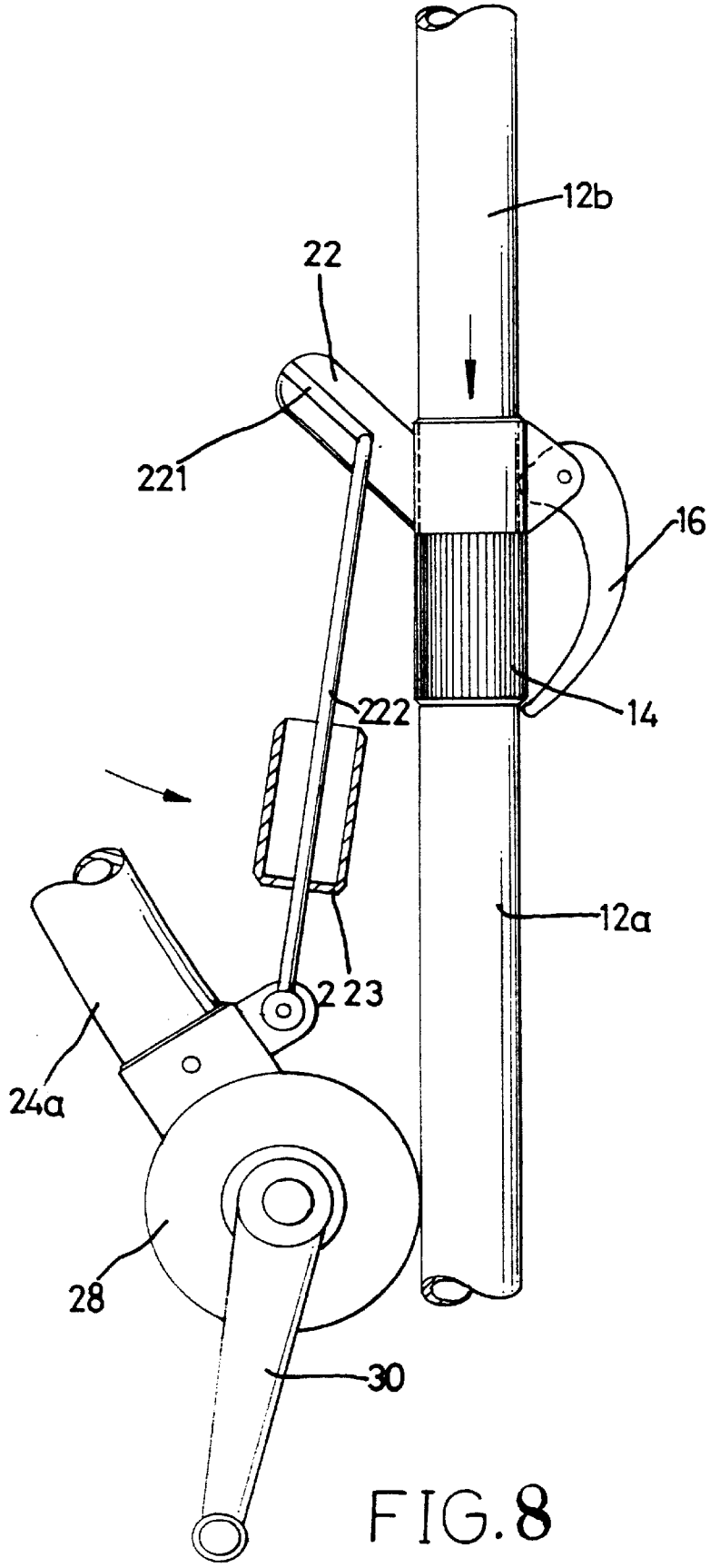

FIG. 8

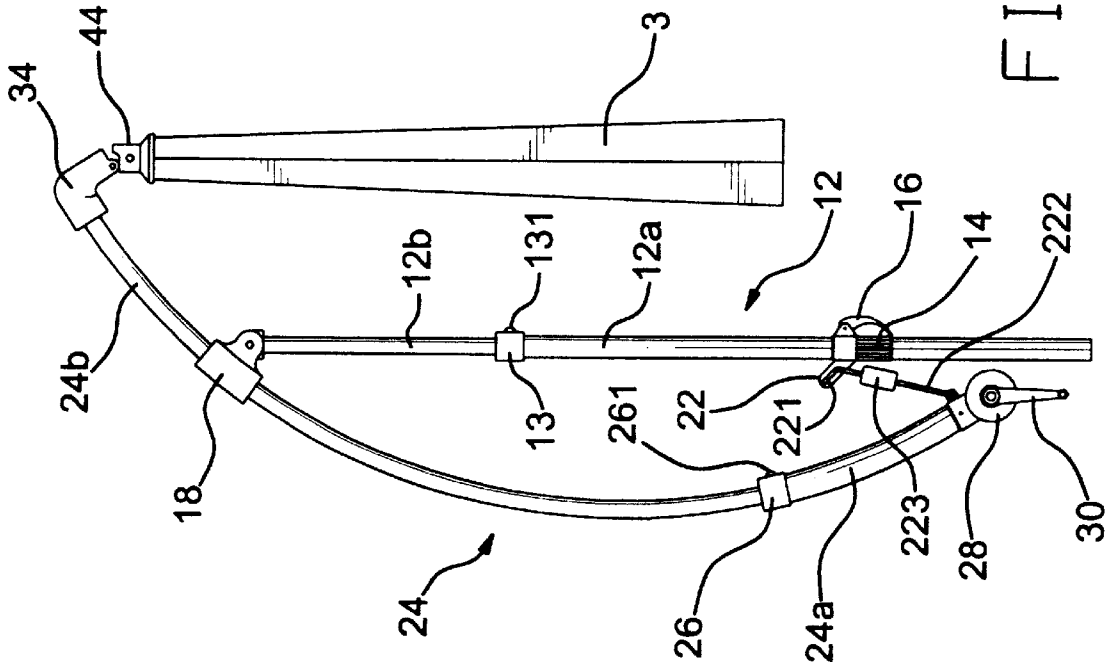
34
44
3
12
16
14
222
12b
131
12a
24b
13
261
22
221
18
223
28
30
24
26
24a

FIG.9

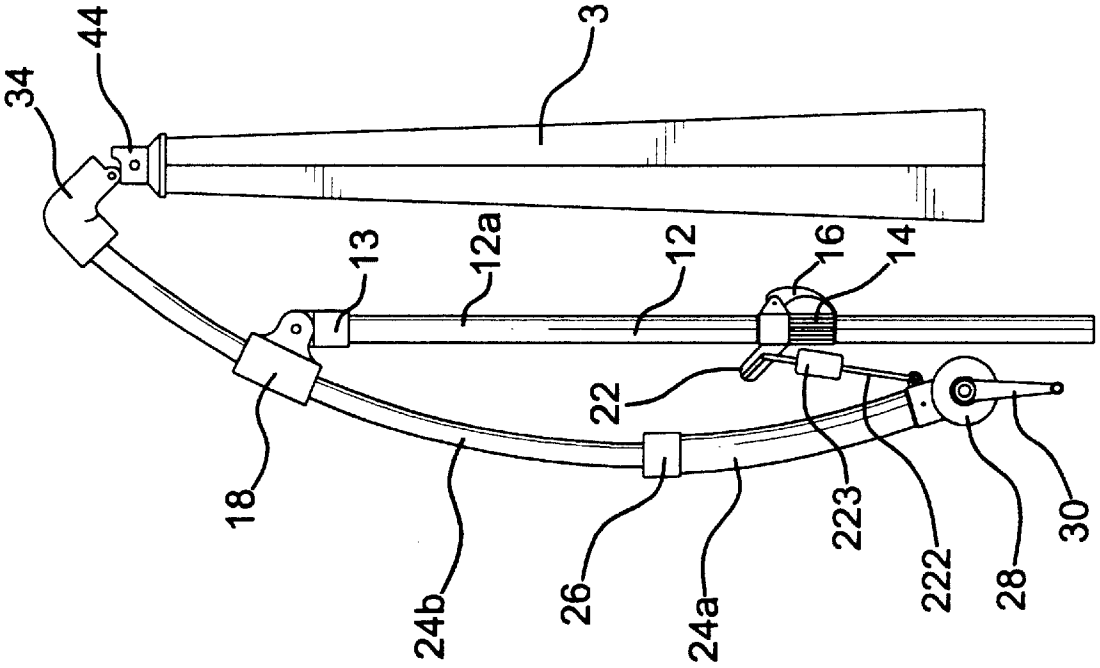

FIG.10

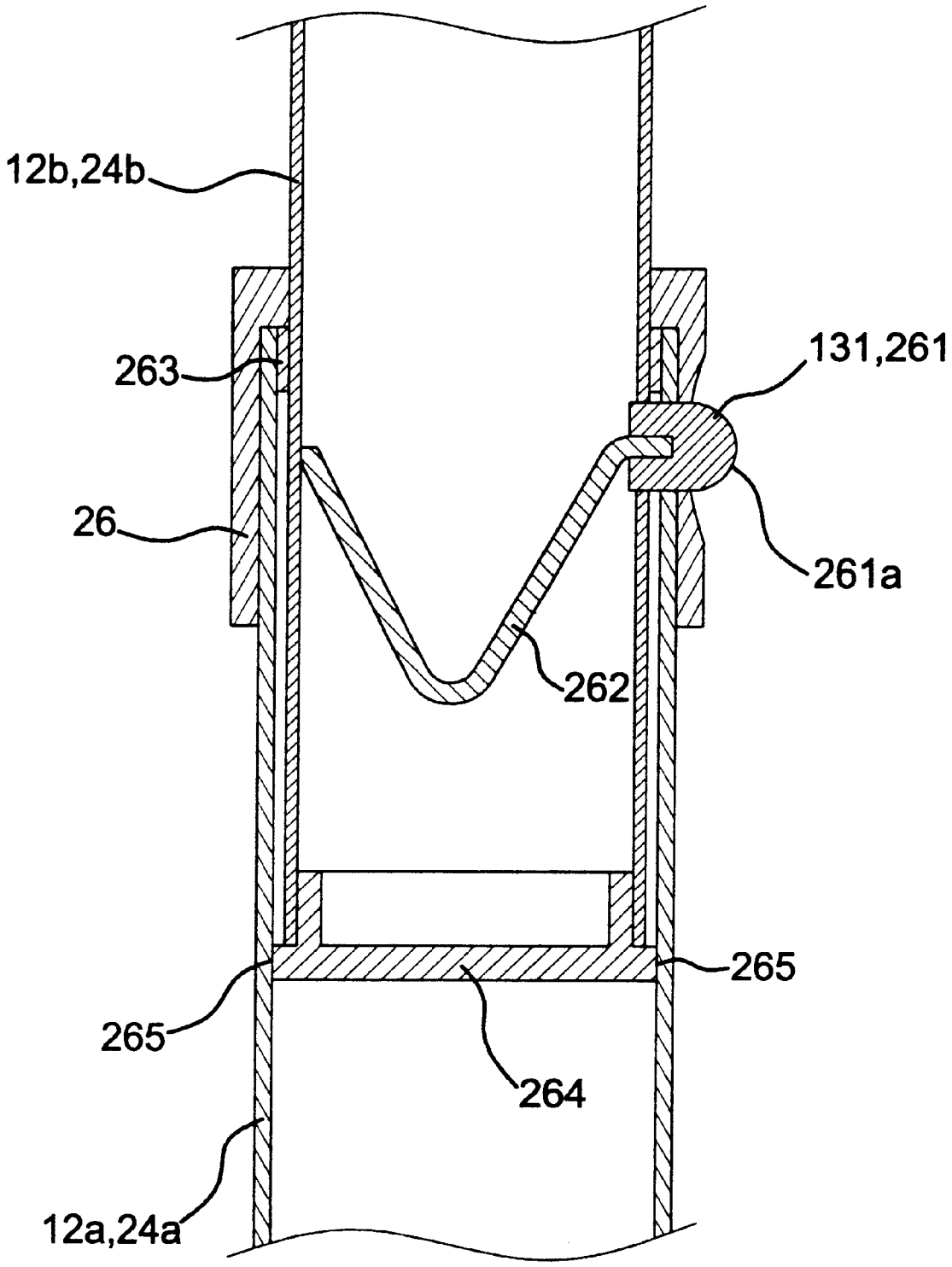

FIG.11

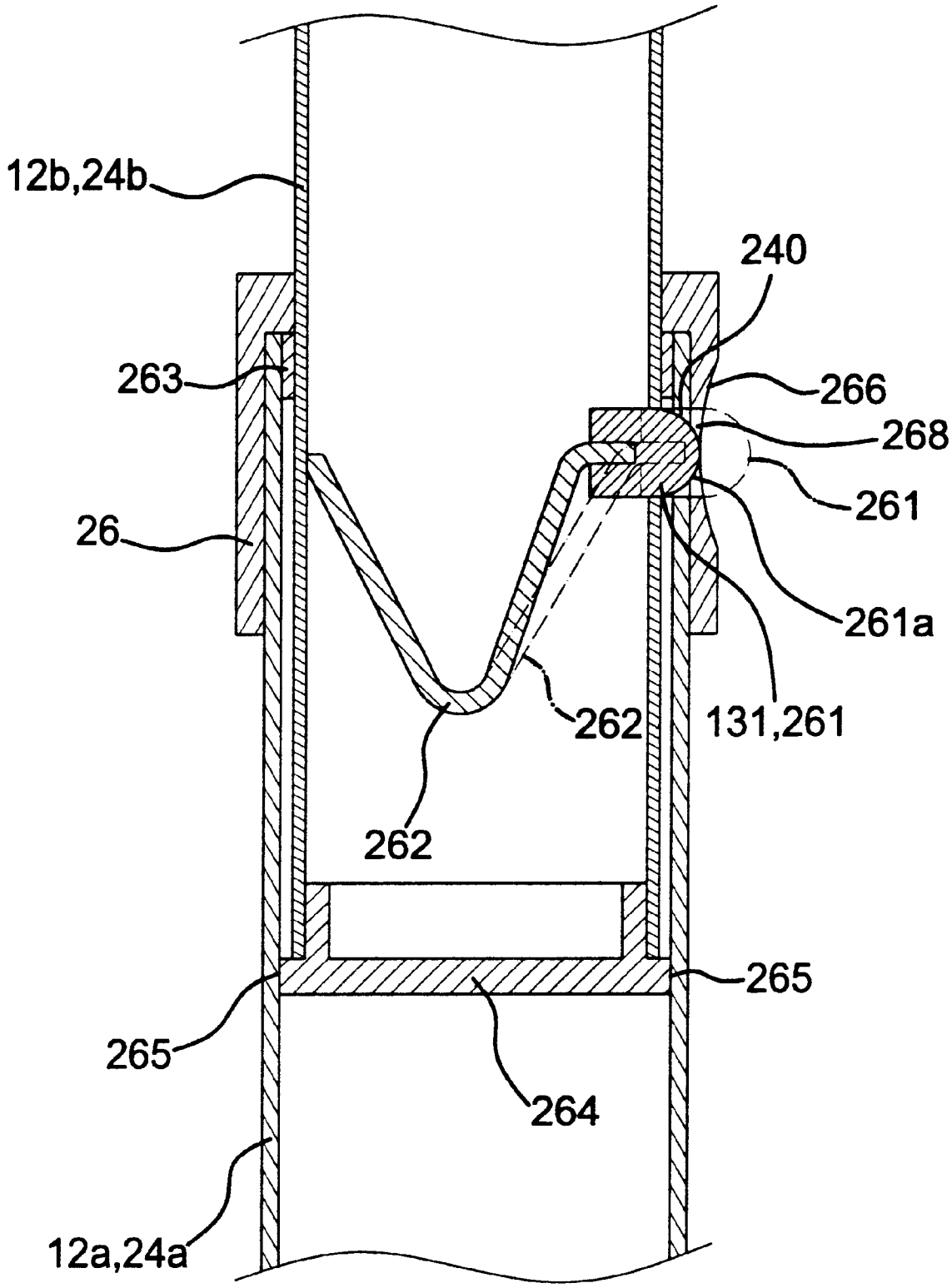
12b,24b
240
263
266
268
261
26
261a
262
131,261
262
265
265
264
12a,24a

FIG.12

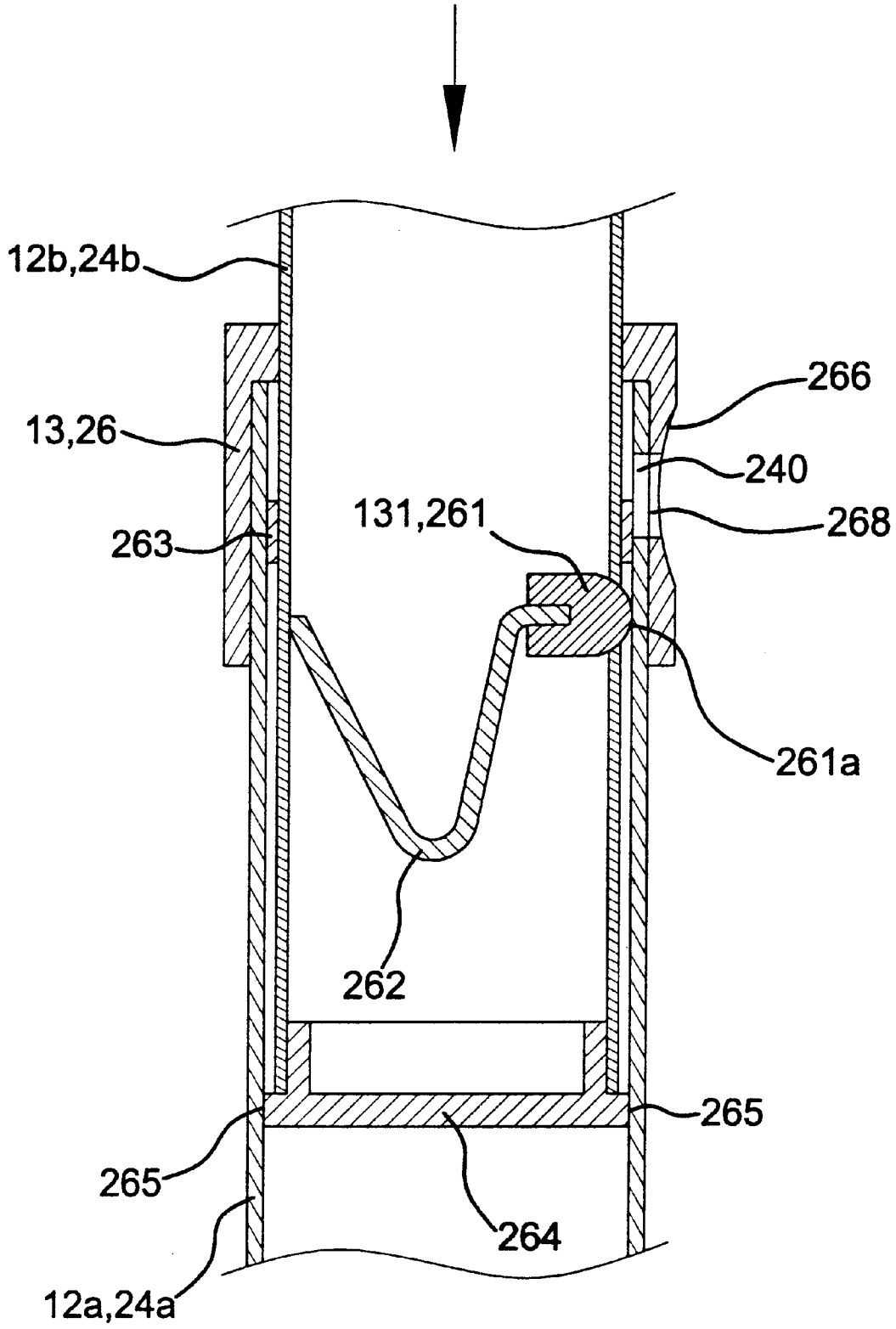
12b,24b
266
13,26
240
131,261
268
263
261a
262
265
265
264
12a,24a

FIG.13

FOLDABLE SUNSHADE WITH A TILTABLE CANOPY

BACKGROUND OF THE INVENTION

1. Field of the Invention

The present invention relates to a foldable sunshade with a tiltable canopy.

2. Description of the Related Art

A sunshade may provide a comfortable space for outdoor activities. A so-called free-arm sunshade manufactured by Glatz Ltd. includes a main frame, a canopy support frame, and a canopy. Although the canopy support frame of the free-arm sunshade is tiltable (rotatable) in all directions to obtain optimum shade, it is, however, found that the adjustment is troublesome. More specifically, the user has to lower the canopy to a reachable level (otherwise a chair or the like is required to reach the canopy), rotate the canopy, and raise the canopy again. The user must operate the mechanism for adjusting the height of the canopy twice. In addition, the device allowing rotation of the canopy in all directions is complicated and might be actuated by strong wind. Furthermore, the volume of the sunshade is relatively large and thus inconvenient and costly to transport. U.S. Pat. No. 6,152,156 issued to Tung (the Applicant) on Nov. 28, 2000 discloses an improved sunshade that allows easy operation in adjusting the tilting angle of the canopy. The present invention is intended to provide an improved design to allow further folding of the sunshade to reduce the volume for transport.

SUMMARY OF THE INVENTION

It is a primary object of the present invention to provide an improved sunshade in which the canopy is tiltable, and adjustment of the tilting angle of the canopy can be easily achieved.

It is another object of the present invention to provide an improved sunshade in which the canopy can be reliably retained in a desired tilting angle.

It is a further object of the present invention to provide an improved sunshade that is foldable. In addition, the canopy support frame together with the canopy can be disengaged from the elbow when not in use.

A sunshade in accordance with the present invention comprises:

a supporting rod having a lower end and an upper end;

an adjusting sleeve slidably mounted around the supporting rod;

a holding sleeve pivotally connected to the upper end of the supporting rod;

an arcuate tube slidably extended through the holding sleeve and including a first end and a second end;

an elbow connected to the first end of the arcuate tube and including an anchor room;

an anchor releasably engaged in the anchor room;

a canopy support frame for supporting a canopy and including a suspension member connected to the elbow, an upper support base having a plurality of ribs attached thereto for supporting a canopy, and a lower support base having a plurality of stretchers attached thereto for supporting the ribs, the lower support base being connected to the anchor;

a reel mounted to the second end of the arcuate tube and including a handle;

a cable having a first end connected to the handle and a second end connected to the anchor, the cable being movable in a retracting direction and a releasing direction;

a connecting rod connected between the second end of the arcuate tube and the adjusting sleeve;

wherein when the handle is operated to release the cable in the releasing direction, the is anchor is disengaged from the anchor room of the elbow while the canopy is folded, and when the handle is operated to retract the cable in the retracting direction, the anchor is moved into the anchor room and thus engages the suspension member with the elbow when the canopy is in a fully opened status;

wherein the adjusting sleeve is slidable along the supporting rod while the arcuate tube is slidable along the holding sleeve to adjust a tilting angle of the canopy relative to the supporting rod;

wherein the arcuate tube includes at least two telescopic tube sections to allow adjustment of an overall length of the arcuate tube; and

wherein the support rod includes at least two telescopic tube sections to allow adjustment of an overall length of the support rod.

The arcuate tube includes a control sleeve to restrain sliding movement of the arcuate tube relative to the holding sleeve. The control sleeve bears against the holding sleeve when the canopy is in an upright position. In an embodiment of the invention, the arcuate tube includes an outer tube section having a first end to which the reel is attached and an inner tube section having a first end telescopically received in a second end of the outer tube section and a second end to which the elbow is attached. The control sleeve is mounted to the second end of the outer tube section and includes a hole aligned with a transverse hole of the outer tube section. An elastic element has a first end securely attached to an inner periphery of the inner tube section and a second end to which a push button is attached. When the arcuate tube is in an extended status, the push button is extended through the transverse hole of the outer tube section and the hole of the control sleeve. When the push button is pushed inward and a longitudinal force is applied to the inner tube section in a retracting direction, the inner tube section is retracted into the outer tube section. When a longitudinal force is applied to the inner tube in a releasing direction, the inner tube section is pulled out of the outer tube section and the push button is extended into the transverse hole of the outer tube section and the hole of the control sleeve under the action of the elastic element when the push button reaches the level of the transverse hole of the outer tube section and the hole of the control sleeve.

The first end of the inner tube section includes an end cap securely attached thereto. The end cap includes a flange in sliding contact with an inner periphery of the outer tube section. A stop is securely mounted around the inner tube section. The stop bears against an end face of the control sleeve for preventing disengagement of the push button when the arcuate tube is in its fully extended status. The stop and the flange assure stable sliding movement of the inner tube section relative to the outer tube section.

The supporting rod includes a lower tube section and an upper tube section which are identical to the arrangements of the inner tube section and the outer tube section of the arcuate tube, thereby allowing adjustment in the overall length of the supporting rod.

Other objects, advantages, and novel features of the invention will become more apparent from the following

detailed description when taken in conjunction with the accompanying drawings.

BRIEF DESCRIPTION OF THE DRAWINGS

FIG. **1** is a perspective view of a sunshade in accordance with the present invention.

FIG. **2** is an exploded perspective view of a canopy support frame of the sunshade.

FIG. **3** is a partial sectional view of the sunshade, wherein the canopy support frame is in a fully extended status.

FIG. **4** is a view similar to FIG. **3**, illustrating a folding operation of the canopy support frame.

FIG. **5** is a side view illustrating tilting of the canopy.

FIG. **6** is a partially sectioned side view of a portion of a main frame of the sunshade.

FIG. **7** is a partial perspective view illustrating a folding operation of the main frame.

FIG. **8** is a partially sectioned side view of the portion of the main frame in a folded status.

FIG. **9** is a side view of the sunshade in a folded status.

FIG. **10** is a side view similar to FIG. **9**, wherein the sunshade is in a fully folded status.

FIG. **11** is an enlarged partial sectional view of the arcuate tube.

FIG. **12** is a view similar to FIG. **11**, wherein a push button has been pushed inward.

FIG. **13** is a view similar to FIG. **11**, wherein an inner tube section of the arcuate tube is retracted into an outer tube section of the arcuate tube.

DETAILED DESCRIPTION OF THE PREFERRED EMBODIMENT

Referring to the drawings and initially to FIG. **1**, a sunshade in accordance with the present invention generally includes a main frame **1**, a canopy support frame **2** (FIG. **3**), and a canopy **3**. The main frame **1** includes a supporting rod **12**, an adjusting sleeve **14** slidably mounted around the supporting rod **12**, and a lever **16** mounted to the adjusting sleeve **14**. When the lever **16** is in a locked position, the adjusting sleeve **14** is frictionally retained in place, and when the lever **16** is in a released position, sliding movement of the adjusting sleeve **14** relative to the supporting rod **12** is allowed.

The supporting rod **12** includes at least two tube sections. In this embodiment, the supporting **12** includes a lower tube section **12***a* and an upper tube section **12***b* having a lower end telescopically received in the lower tube section **12***a*. A control sleeve **13** is mounted to an upper end of the lower tube section **12***a* for retaining the upper tube section **12***b* and the lower tube section **12***a* in place or allowing telescopic movement of the upper tube section **12***a* relative to the lower tube section **12***a*, which will be described later. A holding sleeve **18** is pivotally connected to an upper end of the upper tube section **12***b* at **20**. An arcuate tube **24** is provided and includes at least two tube sections. In this embodiment, the arcuate tube **24** includes an outer tube section **24***a* and an inner tube section **24***b* having an end telescopically received in the outer tube section **24***a*. The outer tube section **24***a* is slidably extended through the holding sleeve **18**. A control sleeve **26** is mounted to an end of the outer tube section **24***a* for retaining the inner tube section **24***b* and the outer tube section **24***a* in place or allowing telescopic movement of the inner tube section **24***b* relative to the outer tube section **24***a*, which will be described later. An elbow **34** mounted to the other end of the inner tube section **24***b* and a reel **28** is mounted to an end of the outer tube section **24***a*. The reel **28** includes a handle **30** for manual operation for folding or unfolding the canopy **3**, which will be described later.

Referring to FIGS. **2** and **3**, the canopy support frame **2** includes a suspension member **44**, an upper support base **48** having a number of ribs **40** attached thereto for supporting the canopy **3**, and a lower support base **46** having a number of stretchers **42** attached thereto for supporting the ribs **40**. The elbow **34** includes a horizontal section (not labeled) and a vertical section **36** having an anchor room **38** defined therein. A cable **32** includes a first end attached to and operable by the handle **30** of the reel **28** so as to be movable in a retracting direction and a releasing direction. A second end of the cable **32** is secured to an anchor **50** after being wound through a pulley **52**, which, in turn, is freely rotatably mounted in the elbow **34** by a pin **54**. The suspension member **44** is connected to the vertical section **36** of the elbow **34** by a pin **64**. The upper support base **48** is releasably engaged with the suspension member **44**. In this embodiment, the upper support base **48** includes a tube **61** having a button **60** mounted to an upper end thereof and biased outwardly by an elastic member **62**. A support sleeve **56** is mounted on top of the lower support base **46** and a lower end of the tube **61** is mounted around the support sleeve **56**. The suspension member **44** includes a transverse hole **58** defined in a periphery thereof. In assembly, the tube **61** is inserted into the suspension member **44**, and the button **60** is depressed by an inner wall of the suspension member **44** until the button **60** reaches the transverse hole **58** and extended outwardly under the action of the elastic member **62**, thereby providing a secure engagement between the suspension member **44** and the tube **61**. Detachment of the suspension member **44** and the tube **61** can be easily achieved by pushing the button **60** and pulling the tube **61** downwardly. The lower support base **46** includes an upper end securely connected to the anchor **50** by any suitable means.

The canopy **3** of the sunshade in FIG. **1** is in a fully opened status. When not in use, the user may operate the handle **30** to move the cable **32** in the releasing direction to thereby lower the anchor **50** such that the anchor **50** disengages from the anchor room **38** of the elbow **34** (FIG. **4**), and the canopy **3** collapses (FIG. **9**). The user may operate the handle **30** to move the cable **32** in the retracting direction to raise the anchor **50** until the anchor **50** enters and is thus anchored in the anchor room **38**, best shown in FIG. **3**. The anchor **50** securely engages the elbow **34** with the suspension member **44**, the purpose of which will be described later.

The canopy of the sunshade in FIG. **1** is in an upright, non-tilting position. The control sleeve **26** on the arcuate tube **24** serves as a stop for restraining the position of the arcuate tube **24**. As shown in FIG. **1**, the control sleeve **26** bears against the holding sleeve **18** when the canopy **3** is in the upright position. Referring to FIG. **5**, when adjustment of the tilting angle of the canopy **3** is required, the lever **16** is released to allow the adjusting sleeve **14** to move downwardly along the supporting rod **12**. The arcuate tube **24** (including the outer tube section **24***a* and the inner tube section **24***b*) is slid along the holding sleeve **18** until a desired tilting angle of the canopy **3** is reached for optimum shade. The lever **16** is then switched to its locked position. The pivotal connection between the holding sleeve **18** and the supporting rod **12** assists in smooth sliding movement of the whole arcuate tube **24** relative to the holding sleeve **18**. Of more importance, the anchor **50** securely engages the

suspension member **44** with the elbow **34** such that the canopy **3** can be reliably retained in a desired tilting angle relative to the vertical axis of the supporting rod **12**.

Turning to FIGS. **6** and **7**, the adjusting sleeve **14** includes an extension **22** extended outwardly and upwardly and having at least one groove **221** (two grooves **221** in this embodiment). At least one connecting rod **222** (two rods in this embodiment) has a first end pivotally connected to the extension **22** and a second end pivotally connected to the end of the outer tube section **24***a*. A positioning sleeve **223** is slidably mounted to the connecting rods **222**. When the positioning sleeve **223** is moved to a position that encloses the grooves **221** of the extension **22** of the adjusting sleeve **14**, the arcuate tube **24** is supported, and the sunshade is in an unfolded status, best shown in FIG. **6**. When not in use, the positioning sleeve **223** is moved away from the extension **22** of the adjusting sleeve **14**, as shown in FIG. **7**, such that the connecting rods **222** can be pivoted downwardly to leave the grooves **221** to a position shown in FIG. **8**. The grooves **221** may have a dimension for holding a portion of the connecting rods **222** yet allow disengagement of the connecting rods **222** from the grooves **221** by means of forcibly pivoting the connecting rods **222** about the adjusting sleeve **14**. It is appreciated that folding of the connecting rods **222** can be proceeded after the adjusting sleeve **14** is moved to its lowest position, best shown in FIG. **9**. Thus, the sunshade can be folded and occupy a smaller space when not in use, which is convenient for storage and transport

Referring to FIGS. **11–13**, the sunshade can be further folded to further reduce the volume thereof in a manner as shown in FIG. **10**. Referring to FIG. **13**, the outer tube section **24***a* includes a transverse hole **240**, and the control sleeve **26** includes a hole **268** aligned with the transverse hole **240**. An elastic element **262** has a first end securely attached to an inner periphery of the inner tube section **24***b* and a second end to which a push button **261** is attached. An end cap **264** is securely attached to the end of the inner tube section **24***b* and includes a flange **265** in sliding contact with an inner periphery of the outer tube section **24***a*. In addition, a stop **263** is securely mounted around the inner tube section **24***b*. Turning to FIG. **11**, when the arcuate tube **24** of the sunshade is in an extended status shown in FIG. **9**, the push button **261** is extended through the transverse hole **240** of the outer tube section **24***a* and the hole **268** of the control sleeve **26**; namely, the arcuate tube **24** is retained in its fully extended status by the push button **261**. Referring to FIG. **12**, when the push button **261** is pushed inward and a longitudinal force is applied to the inner tube section **24***b* (see the arrow in FIG. **13**), a dome **261**a of the push button **261** allows the push button **261** to be moved inward and thus disengaged from the transverse hole **240** of the outer tube section **24***a* and the hole **268** of the control sleeve **26**. Thus, as illustrated in FIG. **13**, the inner tube section **24***b* is retracted into the outer tube section **24***a*. Accordingly, the arcuate tube **24** can be folded to a status shown in FIG. **10**. When the inner tube section **24***b* is pulled out of the outer tube section **24***a*, the push button **261** will be extended into the transverse hole **240** of the outer tube section **24***a* and the hole **268** of the control sleeve **26** under the action of the elastic element **262** when the push button **261** reaches the level of the transverse hole **240** of the outer tube section **24***a* and the hole **268** of the control sleeve **26**. The stop **263** bears against an end face of the control sleeve **26** for preventing disengagement of the push button **261** when the arcuate tube **24** is in its fully extended status. The flange **265** of the end cap **264** provide a support for allowing stable sliding movement of the inner tube section **24***b* relative to the outer tube section **24***a*. The control sleeve **26** may include a concave surface **266** surrounding the hole **268** to allow deeper pressing action of the user's finger.

It is appreciated that the control sleeve **13** for the supporting rod **12** includes a structure identical to that of the control sleeve **26** shown in FIG. **11**. Thus, when a push button **131** (identical to push button **261**) is pushed, the upper tube section **12***b* can be retracted into the lower tube section **12***a* to a status shown in FIG. **10**. Retraction and unfolding operation of the supporting rod **12** are identical to those of the arcuate tube **24** and thus will not be described in detail to avoid redundancy.

According to the above description, it is appreciated that the tilting angle of the canopy of the sunshade of the present invention can be easily adjusted, and the canopy is reliably retained in the desired tilting position after adjustment. In addition, the whole sunshade can be further collapsed after folding the canopy, which may reduce the cost for transport. Furthermore, the canopy support frame **2** together with the canopy **3** can be disengaged from the elbow **34** when not in use.

Although the invention has been explained in relation to its preferred embodiment, it is to be understood that many other possible modifications and variations can be made without departing from the spirit and scope of the invention as hereinafter claimed.

What is claimed is:

1. A sunshade comprising:

a supporting rod having a lower end and an upper end;

an adjusting sleeve slidably mounted around the supporting rod;

a holding sleeve pivotally connected to the upper end of the supporting rod;

an arcuate tube slidably extended through the holding sleeve and including a first end and a second end;

an elbow connected to the first end of the arcuate tube and including an anchor room;

an anchor releasably engaged in the anchor room;

a canopy support frame for supporting a canopy and including a suspension member connected to the elbow, an upper support base having a plurality of ribs attached thereto for supporting a canopy, and a lower support base having a plurality of stretchers attached thereto for supporting the ribs, the lower support base being connected to the anchor;

a reel mounted to the second end of the arcuate tube and including a handle;

a cable having a first end connected to the handle and a second end connected to the anchor, the cable being movable in a retracting direction and a releasing direction;

a connecting rod connected between the second end of the arcuate tube and the adjusting sleeve;

wherein when the handle is operated to release the cable in the releasing direction, the anchor is disengaged from the anchor room of the elbow while the canopy is folded, and when the handle is operated to retract the cable in the retracting direction, the anchor is moved into the anchor room and thus engages the suspension member with the elbow when the canopy is in a fully opened status;

wherein the adjusting sleeve is slidable along the supporting rod while the arcuate tube is slidable along the holding sleeve to adjust a tilting angle of the canopy relative to the supporting rod; and

wherein the arcuate tube includes at least two telescopic tube sections to allow adjustment of an overall length of the arcuate tube.

2. The sunshade as claimed in claim **1**, wherein the arcuate tube includes a control sleeve to restrain sliding movement of the arcuate tube relative to the holding sleeve.

3. The sunshade as claimed in claim **2**, wherein the control sleeve bears against the holding sleeve when the canopy is in an upright position.

4. The sunshade as claimed in claim **3**, wherein the arcuate tube includes:

an outer tube section having a first end to which the reel is attached and a second end, the outer tube section including a transverse hole; and

an inner tube section having a first end telescopically received in the second end of the outer tube section and a second end to which the elbow is attached;

the control sleeve being mounted to the second end of the outer tube section and including a hole aligned with the transverse hole of the outer tube section;

further comprising:

an elastic element having a first end securely attached to an inner periphery of the inner tube section and a second end to which a push button is attached;

wherein when the arcuate tube is in an extended status, the push button is extended through the transverse hole of the outer tube section and the hole of the control sleeve;

wherein when the push button is pushed inward and a longitudinal force is applied to the inner tube section in a retracting direction, the inner tube section is retracted into the outer tube section.

5. The sunshade as claimed in claim **4**, wherein when a longitudinal force is applied to the inner tube section in a releasing direction, the inner tube section is pulled out of the outer tube section and the push button is extended into the transverse hole of the outer tube section and the hole of the control sleeve under the action of the elastic element when the push button reaches the level of the transverse hole of the outer tube section and the hole of the control sleeve.

6. The sunshade as claimed in claim **5**, wherein the push button includes a dome.

7. The sunshade as claimed in claim **4**, wherein the first end of the inner tube section includes an end cap securely attached thereto, the end cap including a flange in sliding contact with an inner periphery of the outer tube section.

8. The sunshade as claimed in claim **4**, further comprising a stop securely mounted around the inner tube section, wherein the stop bears against an end face of the control sleeve for preventing disengagement of the push button when the arcuate tube is in its fully extended status.

9. The sunshade as claimed in claim **7**, further comprising a stop securely mounted around the inner tube section, wherein the stop bears against an end face of the control sleeve for preventing disengagement of the push button when the arcuate tube is in its fully extended status.

10. The sunshade as claimed in claim **9**, wherein the stop and the flange assure stable sliding movement of the inner tube section relative to the outer tube section.

11. The sunshade as claimed in claim **1**, wherein the adjusting sleeve includes an extension extended outwardly and upwardly and having a groove defined therein, the connecting rod includes a first end pivotally connected to the extension and a second end pivotally connected to the second end of the arcuate tube, a portion of the connecting rod being releasably received in the groove, and a positioning sleeve being slidably mounted to the connecting rod and movable between a first position covering the groove of the extension to retain the connecting rod in place and a second position disengaged from the extension to allow pivotal movement of the connecting rod relative to the extension.

12. The sunshade as claimed in claim **1**, wherein the suspension member includes a transverse hole defined in a periphery thereof, and the upper support base includes a tube having a button mounted to an upper end thereof and biased outwardly by an elastic member, the button being releasably extended through the transverse hole of the suspension member to releasably connect the suspension member with the upper support base.

13. A sunshade comprising:

a supporting rod having a lower end and an upper end;

an adjusting sleeve slidably mounted around the supporting rod;

a holding sleeve pivotally connected to the upper end of the supporting rod;

an arcuate tube slidably extended through the holding sleeve and including a first end and a second end;

an elbow connected to the first end of the arcuate tube and including an anchor room;

an anchor releasably engaged in the anchor room;

a canopy support frame for supporting a canopy and including a suspension member connected to the elbow, an upper support base having a plurality of ribs attached thereto for supporting a canopy, and a lower support base having a plurality of stretchers attached thereto for supporting the ribs, the lower support base being connected to the anchor;

a reel mounted to the second end of the arcuate tube and including a handle;

a cable having a first end connected to the handle and a second end connected to the anchor, the cable being movable in a retracting direction and a releasing direction;

a connecting rod connected between the second end of the arcuate tube and the adjusting sleeve;

wherein when the handle is operated to release the cable in the releasing direction, the anchor is disengaged from the anchor room of the elbow while the canopy is folded, and when the handle is operated to retract the cable in the retracting direction, the anchor is moved into the anchor room and thus engages the suspension member with the elbow when the canopy is in a fully opened status;

wherein the adjusting sleeve is slidable along the supporting rod while the arcuate tube is slidable along the holding sleeve to adjust a tilting angle of the canopy relative to the supporting rod;

wherein the supporting rod includes:

a lower tube section to which the adjusting sleeve is mounted, the lower tube section including a transverse hole; and

an upper tube section having a lower end telescopically received in the lower tube section and a second end to which the holding sleeve is attached;

a control sleeve mounted to the upper end of the lower tube section, the control sleeve including a hole aligned with the transverse hole of the lower tube section; and

an elastic element having a first end securely attached to an inner periphery of the upper tube section and a second end to which a push button is attached;

wherein when the supporting rod is in an extended status, the push button is extended through the transverse hole of the lower tube section and the hole of the control sleeve;

wherein when the push button is pushed inward and a longitudinal force is applied to the upper tube section in a retracting direction, the upper tube section is retracted into the lower tube section; and

wherein the lower and upper tube sections allow adjustment of an overall length of the support rod.

14. The sunshade as claimed in claim **13**, wherein when a longitudinal force is applied to the upper tube section in a releasing direction, the upper tube section is pulled out of the lower tube section and the push button is extended into the transverse hole of the lower tube section and the hole of the control sleeve under the action of the elastic element when the push button reaches the level of the transverse hole of the lower tube section and the hole of the control sleeve.

15. The sunshade as claimed in claim **14**, wherein the push button includes a dome.

16. The sunshade as claimed in claim **13**, wherein the first end of the upper tube section includes an end cap securely attached thereto, the end cap including a flange in sliding contact with an inner periphery of the lower tube section.

17. The sunshade as claimed in claim **13**, further comprising a stop securely mounted around the upper tube section, wherein the stop bears against an end face of the control sleeve for preventing disengagement of the push button when the supporting rod is in its fully extended status.

18. The sunshade as claimed in claim **16**, further comprising a stop securely mounted around the upper tube section, wherein the stop bears against an end face of the control sleeve for preventing disengagement of the push button when the supporting rod is in its fully extended status.

19. The sunshade as claimed in claim **18**, wherein the stop and the flange assure stable sliding movement of the upper tube section relative to the lower tube section.

20. The sunshade as claimed in claim **13**, wherein the arcuate tube includes at least two telescopic tube sections to allow adjustment of an overall length of the arcuate tube.

* * * * *