US006321763B1

(12) **United States Patent**
Ma

(10) **Patent No.: US 6,321,763 B1**
(45) **Date of Patent: Nov. 27, 2001**

(54) **UMBRELLA STRUCTURE**

(76) Inventor: **Joen Shen Ma**, Fl. 12, No. 578, GuangFu S. Road, Taipei (TW)

(*) Notice: Subject to any disclaimer, the term of this patent is extended or adjusted under 35 U.S.C. 154(b) by 0 days.

(21) Appl. No.: **09/589,161**

(22) Filed: **Jun. 8, 2000**

(30) **Foreign Application Priority Data**

May 3, 2000 (TW) 089207299

(51) **Int. Cl.**[7] **A45B 25/00**; A45B 17/00
(52) **U.S. Cl.** **135/20.1**; 135/21; 135/20.3
(58) **Field of Search** 135/20.1, 21, 20.3

(56) **References Cited**

U.S. PATENT DOCUMENTS

5,116,258	*	5/1992	Vennick	135/21 X
5,735,302	*	4/1998	Saliva	135/21 X
5,785,069	*	7/1998	Glatz	135/20.3 X
5,937,882	*	8/1999	Harbaugh	135/20.3
5,960,806	*	10/1999	Steiner	135/20.1
6,014,980	*	1/2000	Glatz	135/21 X
6,196,242	*	3/2001	Xu	135/21 X

FOREIGN PATENT DOCUMENTS

0334821	*	9/1989	(EP)	135/20.1

* cited by examiner

Primary Examiner—Robert Canfield
(74) *Attorney, Agent, or Firm*—Rosenberg, Klein & Lee

(57) **ABSTRACT**

An umbrella includes a panel attached to a crown and supported by ribs. A runner is coupled to the ribs by stretchers to be movable with respect to the crown. A pole located beside the panel is arranged upright with a slide mounted thereon to be movable along the pole. An arm has an end pivoted to the slide and is further supported by a link pivoted to both the pole and the arm. A first rope to which the slide is attached is movably received in the pole and supported by an upper pulley and a crank whereby by actuating the crank the first rope moves the slide along the pole. A second rope movably received in the arm having an end fixed to the pole via a pulley fixed on the slide and an opposite end extending beyond the arm and through the crown to be fixed to the runner whereby by moving the slide along the pole, the arm is rotated between a closed position and an open position where the runner is moved toward the crown by the second rope. Spaced tabs are formed on the arm to be received in grooves defined in the crown when the arm is moved to the open positioned for securely attaching the panel to the arm thereby allowing the panel to be moved with the arm for adjusting the orientation thereof. A locking device is provided in the arm for selectively securing the second rope.

7 Claims, 8 Drawing Sheets

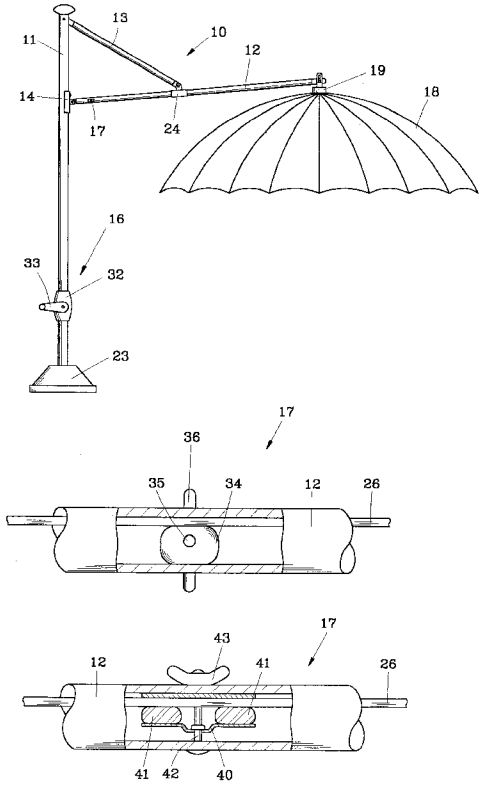

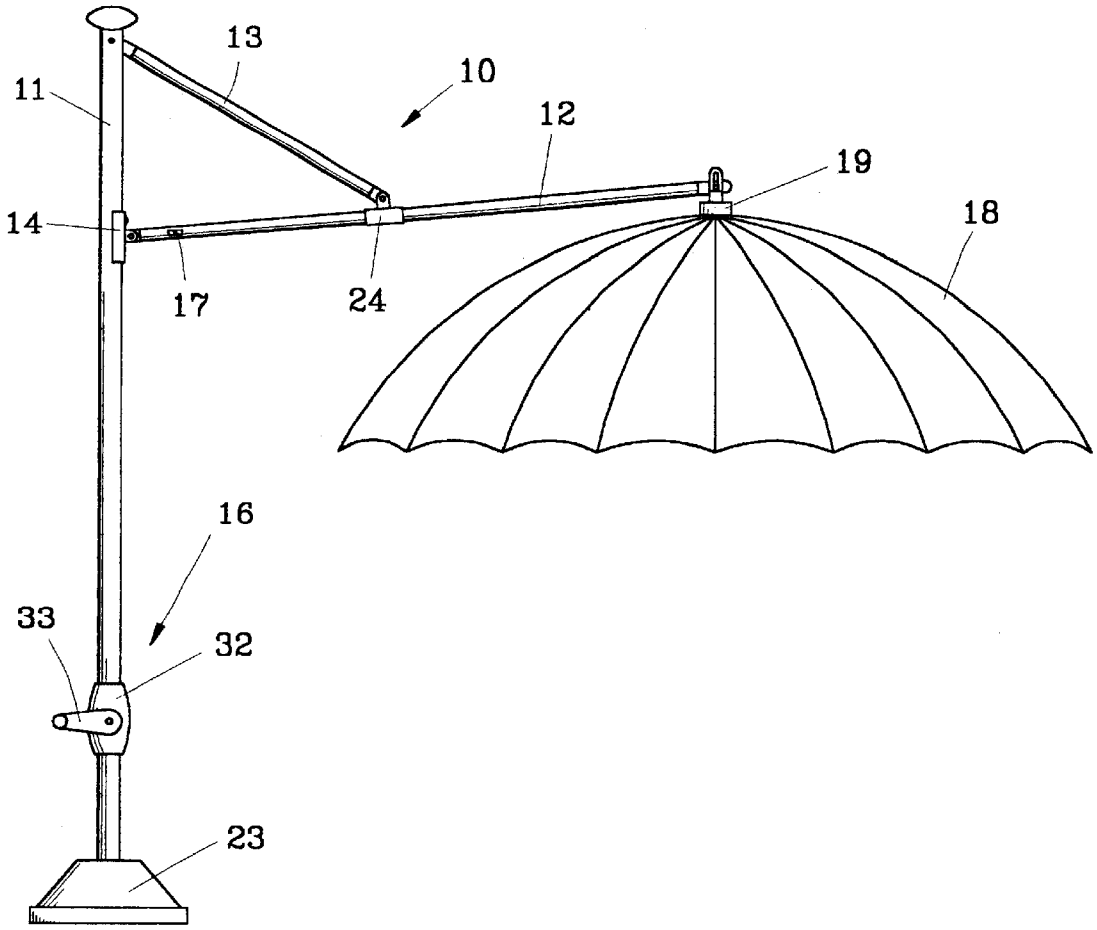

FIG.1

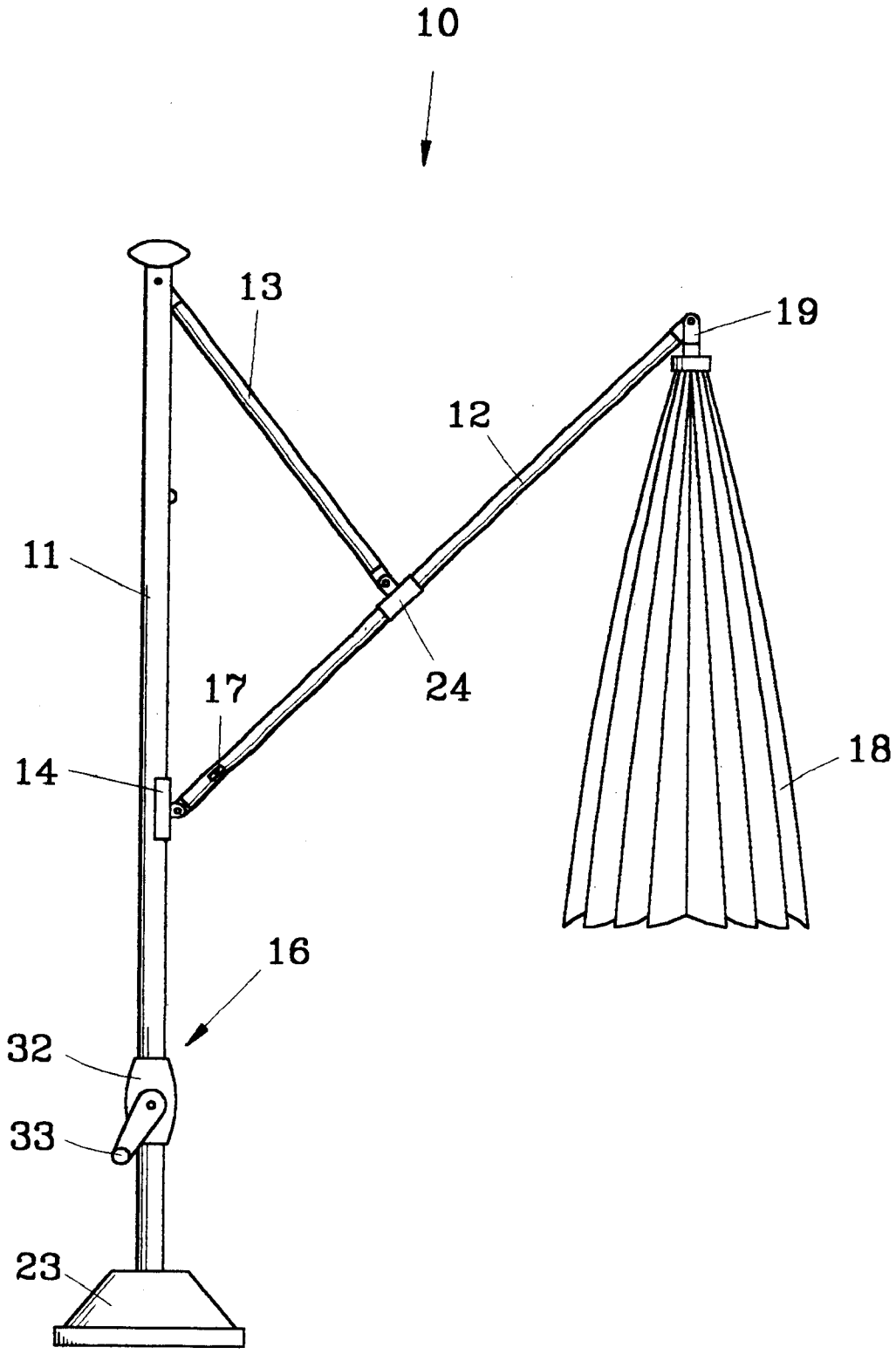

FIG.2

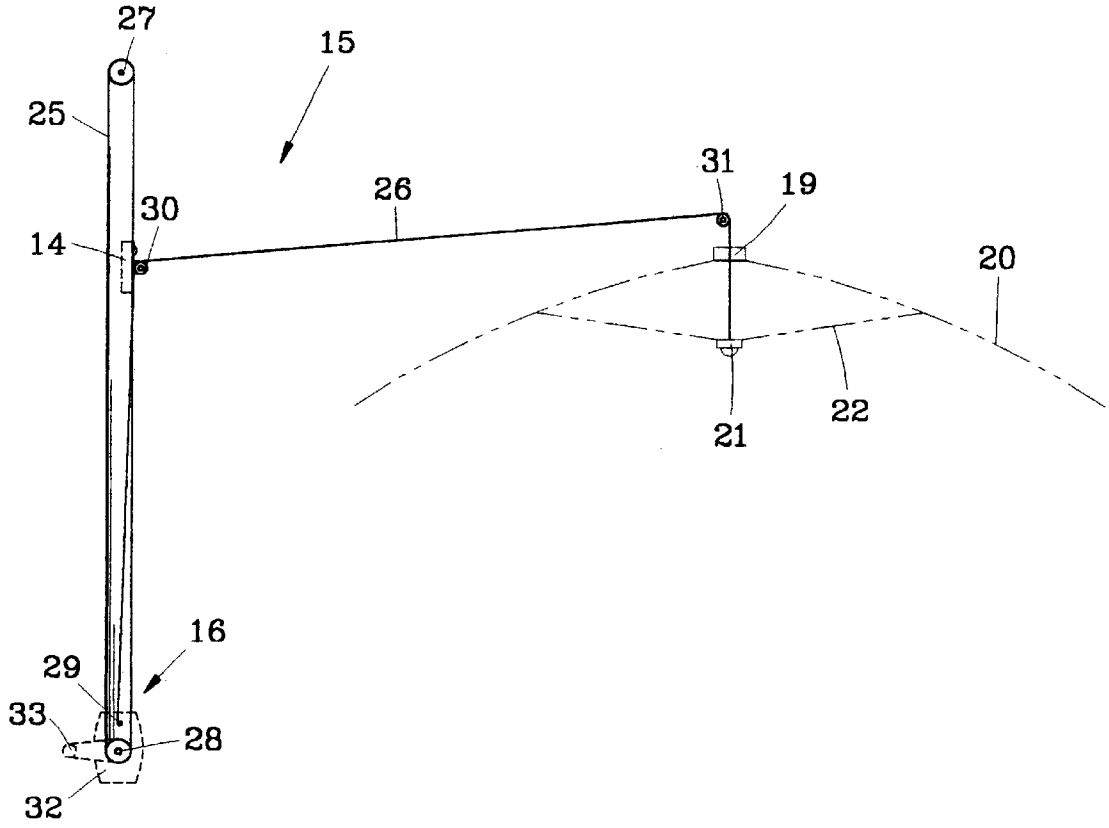

FIG.3

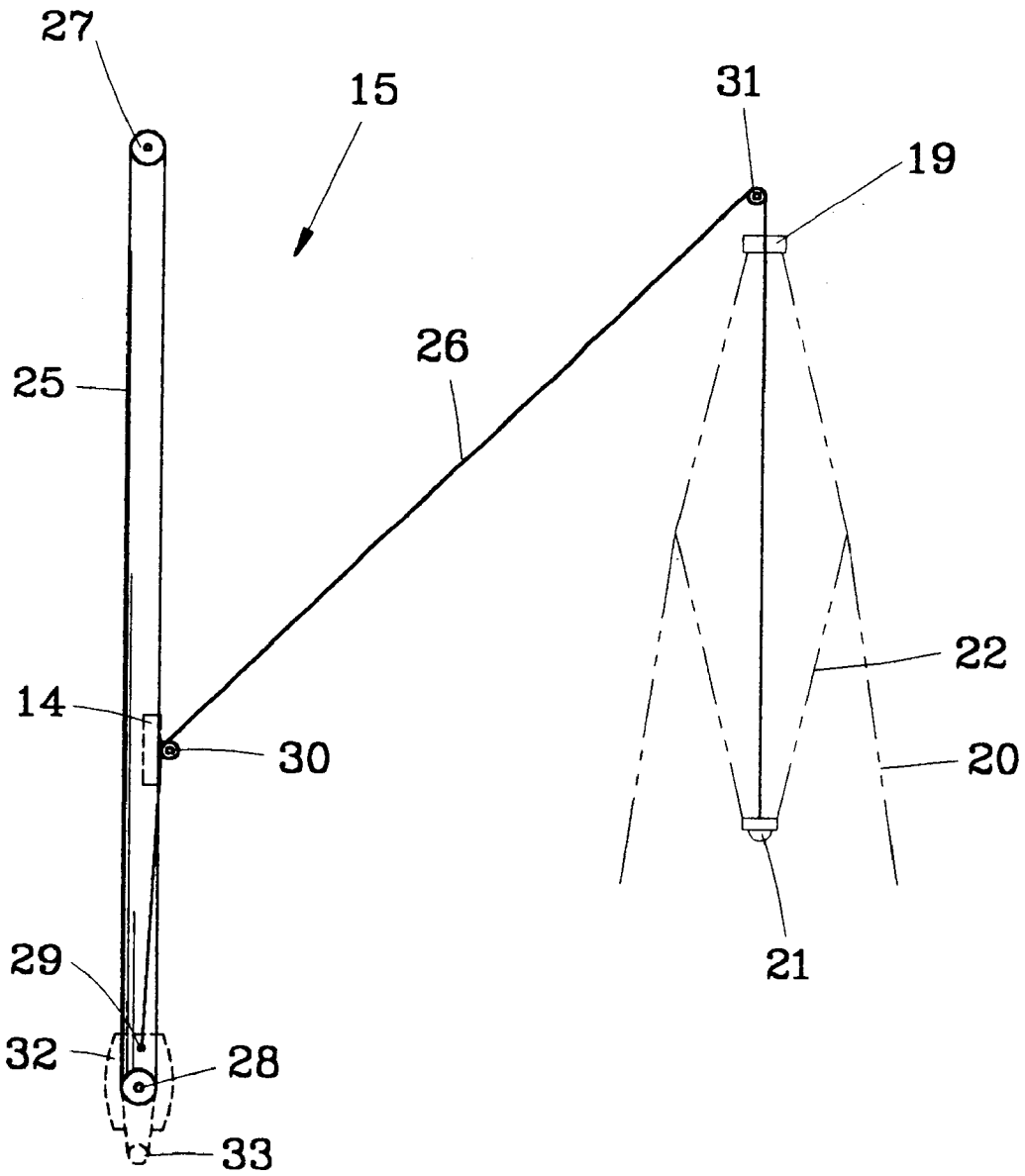

FIG.4

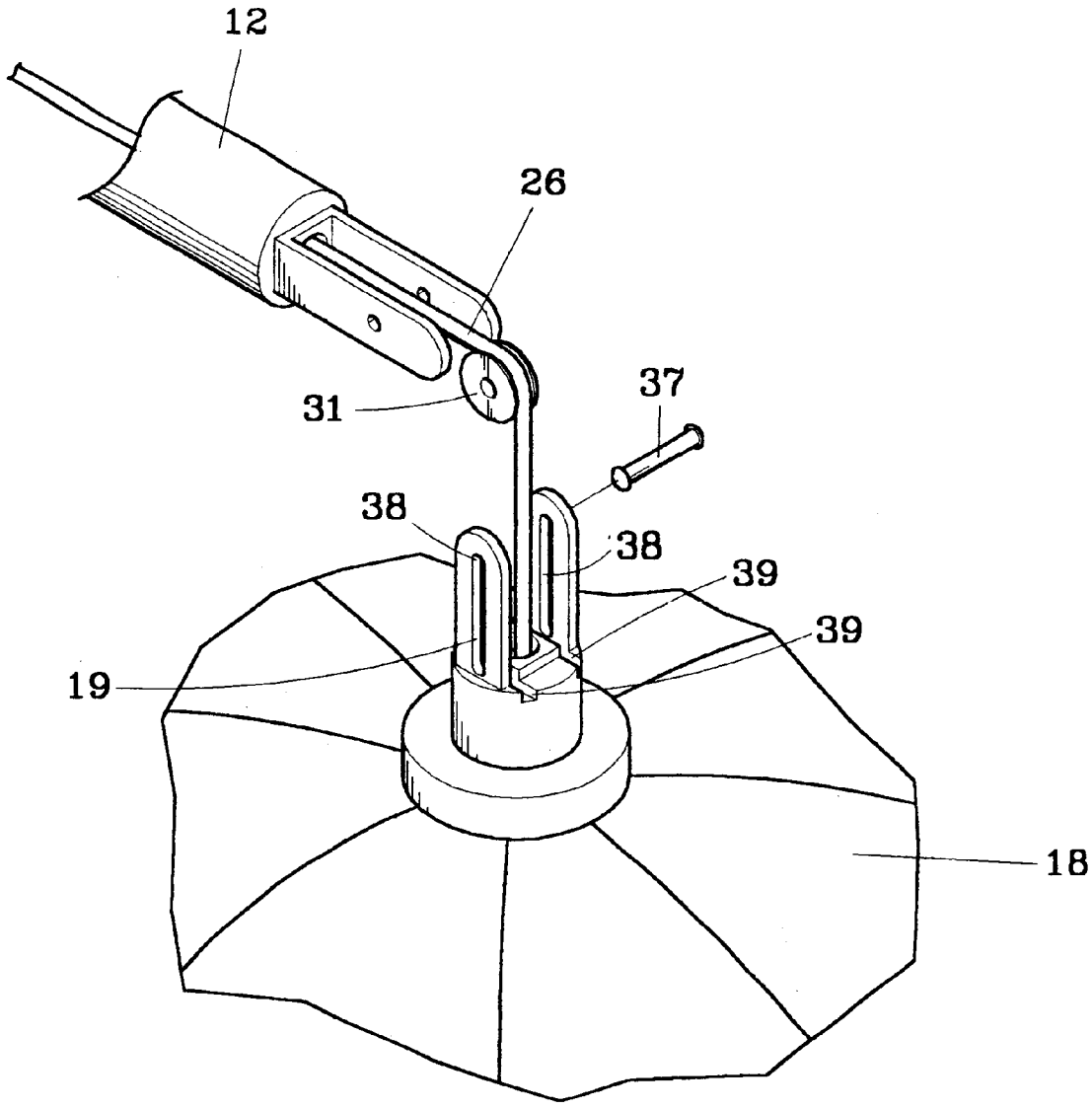

FIG.5

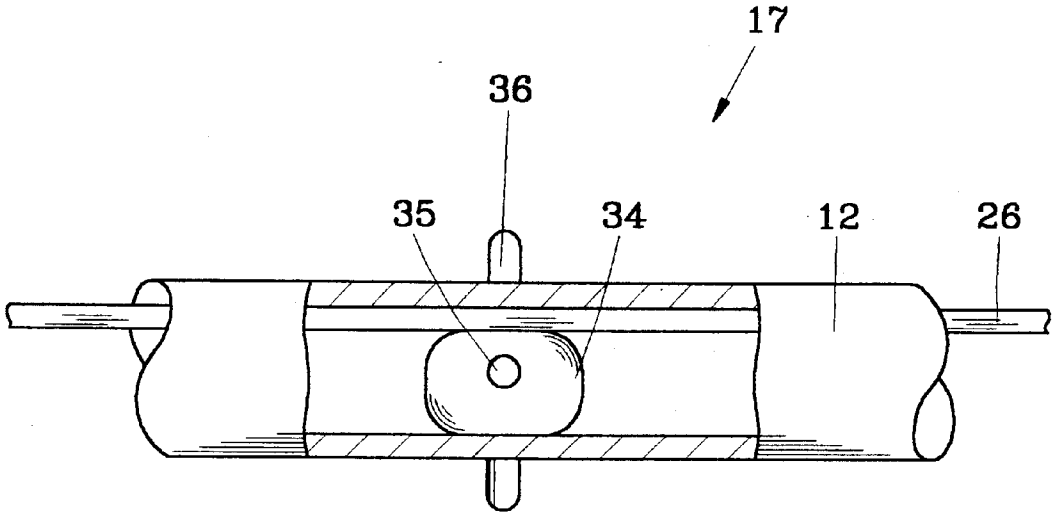

FIG.6

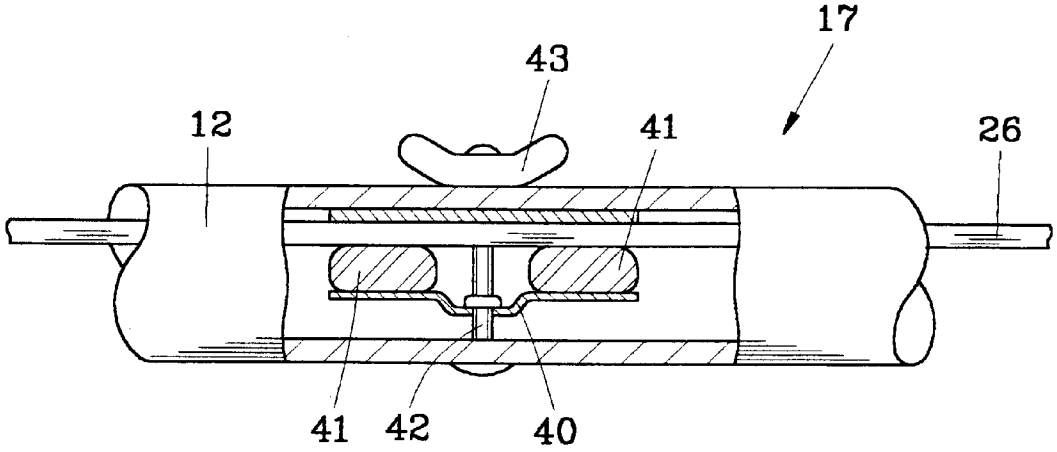

FIG.7

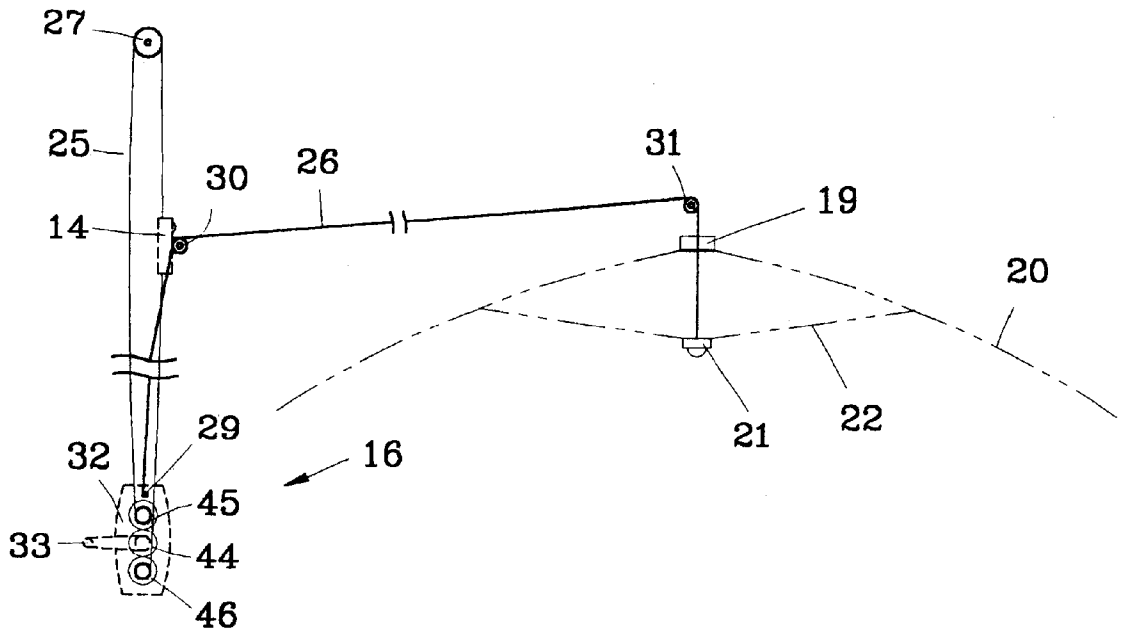

FIG.8

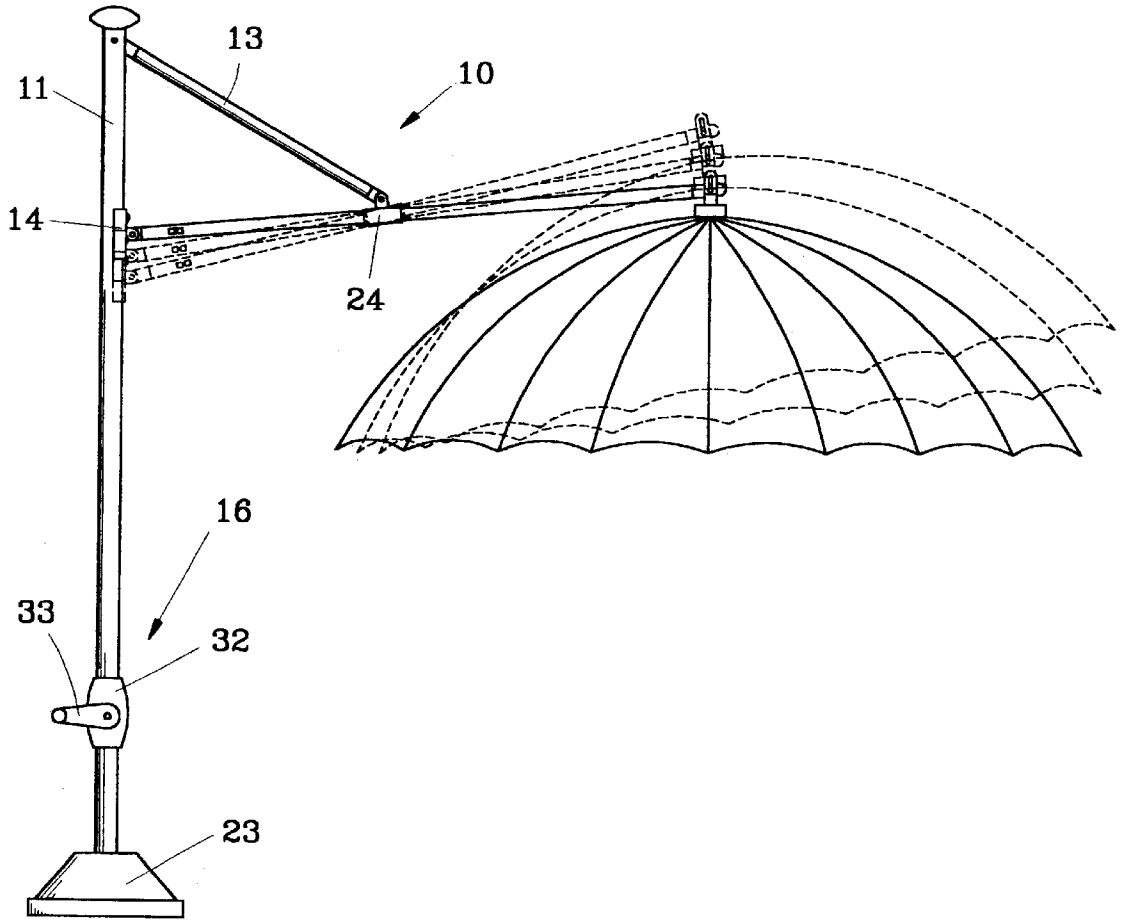

FIG.9

UMBRELLA STRUCTURE

FIELD OF THE INVENTION

The present invention generally relates to a rope-operated large-sized umbrella, such as a beach umbrella and a garden umbrella, and in particular an umbrella of the type with an orientation-adjustable umbrella panel.

BACKGROUND OF THE INVENTION

Conventional umbrellas comprise a center post on which radially extending ribs are mounted for supporting a panel. A runner is movably mounted on the center post for manual operation of opening the umbrella. For a large-sized umbrella, such as a beach umbrella and a garden umbrella, the center post occupies the centermost space and often interferes with activity occurring under the umbrella panel. Thus a full exploitation of the space covered by the panel is in general not possible.

Taiwan Patent Application No. 86202611 discloses an umbrella structure in which the panel is supported by a pole located beside the panel, rather than at a center of the panel. A rope system is adapted to control opening/closing of the panel. This structure allows a full exploitation of the space covered by the panel.

However, the panel of the above mentioned large-sized umbrella is fixed at a particular direction. Changing direction of the panel in response to the orientation of the sun is generally impossible.

Thus, it is desired to provide an umbrella structure for overcoming the above problem.

SUMMARY OF THE INVENTION

Accordingly, an object of the present invention is to provide an umbrella supported by a pole located adjacent a panel of the umbrella, the panel being operated by a rope system for opening/closing the panel in a stepless fashion.

Another object of the present invention is to provide an umbrella comprising a panel supported by ribs radially extending from a runner, the runner being coupled to a rope system controlled by a crank device, to be moved toward/away from a crown of the panel for opening/closing the umbrella.

A further object of the present invention is to provide an umbrella comprising a panel mounted to a crown, the crown being selectively and releaseably attached to an end of an arm for being rotated with the arm thereby adjusting the orientation thereof.

Yet a further object of the present invention is to provide an umbrella comprising a panel selectively and releaseably attached to an arm supported by a pole located beside the panel for being movable with the arm to adjust the orientation thereof, the panel and the arm being operated by a rope system that is controlled by a crank device.

In accordance with the present invention, there is provided an umbrella comprising a panel attached to a crown and supported by ribs. A runner is coupled to the ribs by stretchers to be movable with respect to the crown. A pole located beside the panel is arranged upright with a slide mounted thereon to be movable along the pole. An arm has an end pivoted to the slide and is further supported by a link pivoted to both the pole and the arm. A first rope, to which the slide is attached, is movably received in the pole and supported by an upper pulley and a crank, whereby by actuating the crank the first rope moves the slide along the pole. A second rope is movably received in the arm and has an end fixed to the pole via a pulley fixed on the slide. An opposite end of the second rope extends beyond the arm and through the crown to be fixed to the runner, whereby by moving the slide along the pole, the arm is rotated between a closed position and an open position where the runner is moved toward the crown by the second rope. Spaced tabs are formed on the arm to be received in grooves defined in the crown when the arm is moved to the open positioned for securely attaching the panel to the rm, to thereby allow the panel to be moved with the arm for adjusting the orientation thereof. A locking device is provided in the arm for selectively securing the second rope.

BRIEF DESCRIPTION OF THE DRAWINGS

The present invention will be apparent to those skilled in the art by reading the following description of a preferred embodiment thereof, with reference to the accompanying drawings, in which:

FIG. **1** is a side elevational view of an umbrella constructed in accordance with the present invention showing the umbrella at an open position;

FIG. **2** is similar to FIG. **1** but showing the umbrella at a closed position;

FIG. **3** is a schematic view showing a rope system of the umbrella of the present invention corresponding to the open position of FIG. **1**;

FIG. **4** is similar to FIG. **3** but corresponding to the closed position of FIG. **2**;

FIG. **5** is an exploded view of the pivotal connection between an arm and a crown of the umbrella of the present invention;

FIG. **6** is a side view, partially sectioned, of a portion of the arm showing a rope locking device of the umbrella of the present invention;

FIG. **7** is similar to FIG. **6** but showing another embodiment of the rope locking device;

FIG. **8** is similar to FIG. **3** but showing a crank device of different embodiment; and

FIG. **9** is a side elevational view of the umbrella of the present invention showing the adjustment of the orientation thereof.

DETAILED DESCRIPTION OF THE PREFERRED EMBODIMENTS

With reference to the drawings and in particular to FIGS. **1–4**, wherein an umbrella constructed in accordance with the present invention, generally designated at **10**, is shown, the umbrella **10** comprises a support pole **11** and an arm **12** movably mounted to the support pole **11** by a slide **14** and also coupled to the support pole **11** by a link **13**, slide **14** for forming a frame to support a panel assembly comprising a panel **18** supported by ribs **20** and stretchers **22**. A control rope system **15** comprises primary and secondary ropes **25** and **26** coupled to the panel assembly and operated by a crank driving device **16** for opening/closing the panel **18**.

Similar to a conventional umbrella, the ribs **20** of the umbrella **10** of the present invention radially extend from a crown **19** for supporting the panel **18**. The stretchers **22** are pivotally connected to the ribs **20** and a runner **21** that is movable with respect to the crown **18** for opening/closing the panel **18**. The panel assembly, including the panel **18**, the ribs **20**, the stretchers **22**, the crown **19** and the runner **21**, is connected to the movable arm of the support frame by the

secondary rope **26** to be supported in a raised position by the pole **11**. A remote end of the secondary rope **26** extends through a central bore (not labeled) defined in the crown **19** to be fixed to the runner **21**. Whereby, when the secondary rope **26** is pulled in a direction away from the panel **18**, the runner **21** is moved from a lower closed position (FIGS. **2** and **4**) to an upper open position (FIGS. **1** and **3**) for driving the ribs **20** and the stretchers **22** to open the panel **18** as shown in FIG. **1**.

The pole **11**, in general, stands upright with a lower end thereof supported by a base **23**. The base **23** is preferably of substantial mass for stabley supporting the umbrella

The slide **14** is attached to the primary rope **25** and slidable along the pole **11** so that when the primary rope **25** is driven by the crank driving device **16**, the slide **14** is moved along the pole **11** and thus causing the arm **12** to move with respect to the pole **11**.

The arm **12** has a proximate end pivotally connected to the slide **14** and a distal end to which the panel assembly is attached by the secondary rope **26**. A pivot joint **24** is formed on the arm **12**. The link **13** has two ends respectively pivotally connected to an upper end of the pole **11** and the pivot joint **24**. When the slide **14** is moved along the pole **11**, the arm **12** is forced to rotate about the pivot joint **24** and the pivotal connection thereof moves with the slide **14**, thereby moving between the open position (FIG. **3**) and the closed position (FIG. **4**). In the open position, a substantially right angle is formed between the pole **11** and the arm **12** (namely, the arm **12** being substantially horizontal), whereby the distal end of the arm **12** and thus the panel **18** is farthest from the pole **11**. In the closed position, an angle substantially smaller than a right angle is formed between the arm **12** and the pole **11**, whereby the distal end of the arm **12** is moved close to the pole **11**.

The pole **11**, the arm **12**, the link **13** and the slide **14** are all described in Taiwan Patent Application No. 86202611. Thus, unless required for the description of the present invention, these elements will not be further described in detail.

The pole **11** comprises an elongate tubular member having a central bore (not labeled) in which the primary rope **25** is movably received. The primary rope **25** extends over a pulley **27** mounted on the upper end of the pole **11** and has ends fixed to crank driving device **16** to be driven thereby.

The secondary rope **26** has a predetermined length. With the distal end fixed to the runner **21**, a proximate end of the secondary rope **26** is fixed to the pole **11**, preferably at a location adjacent the lower end of the pole **11**. In the embodiment illustrated, a pin **29** fixed in the pole **11** is provided to which the proximate end of the secondary rope **26** is attached.

The arm **12** is an elongate tubular member through which the secondary rope **26** extends. The secondary rope **26** further extends through the central bore of the pole **11**. In this respect, a pulley **30** is mounted at the proximate end of the arm **12** for aiding the passage of the secondary rope **26** into the pole **11**. A further pulley **31** is mounted at the distal end of the arm **12** for aiding the passage of the secondary rope **26** through the crown **19** to the runner **21**.

The crank driving device **16** is fixed to a lower portion of the pole **11** at a position readily accessible by a user for operation thereof. The crank driving device **16** comprises a casing **32** mounted to the pole **11**. An axle **28** is rotatably supported in the casing **32** and is coupled to a crank member **33** accessible by a user for rotating the axle **28**. The primary rope **25** forms a loop coupled between the axle **28** and the pulley **27**. When the crank member **33** is actuated, the primary rope **25** is driven to move between the axle **28** and the pulley **27**, which in turn drives the slide **14** to move along the pole **11**.

In the embodiment illustrated, the pin **29** for fixing the secondary rope **26** is arranged inside the casing **32** of the crank driving device **16**, but it can be arranged in other suitable positions along the pole **11**.

Referring to FIG. **5**, two spaced first tabs (not labeled) are formed on the remote end of the arm **12** with the pulley **31** rotatably supported therebetween by a pin **37**. The crown **19** forms two spaced second tabs (not labeled) defining aligned slots **38** in which the pin **37** is movably received whereby the crown **19** is movable with respect to the arm **12** between an upper, locked position and a lower, released position defined by opposite ends of the slots **38**. Two grooves **39** are defined in the crown **19** whereby when the secondary rope **26** is pulled to move the crown **19** to the locked position, the first tabs of the arm **12** are received in the grooves **39** of the crown **19**. By means of the tension of the secondary rope **26** and the reaction force between the first tabs and the grooves **39**, the panel assembly is effectively locked to the distal end of the arm **12**. The panel **18** may then be swung with the arm **12** about the pivotal connection between the arm **12** and the slide **14** to change orientation thereof, as indicated by dashed lines of FIG. **9**.

Also referring to FIG. **6**, to fix the secondary rope **26** at the tensioned condition associated with the locked condition of the crown **19**, a locking device **17** is provided inside the arm **12**. The locking device **17** may be manually actuated to engage and thus fix the secondary rope **26**. The locking device **17** comprises a locking member **34** pivotally mounted in the arm **12** by an eccentric pin **35**. The secondary rope **26** extends through a gap between the locking member **34** and an inner surface of the arm **12**. The pin **35** is coupled to a manual knob **36**. When the knob **36** is rotated by a user, the locking member **34** is moved in such a way so as to reduce the gap, and thereby pinch the secondary rope **26** between the locking member **34** and the inner surface of the arm **12**, and thus effectively lock the secondary rope **26** in the particular position.

It is apparent to those having ordinary skills to arrange the locking device **17** at any suitable location other than the arm **12**. For example, the locking device **17** may be attached to the slide **14** for fixing the secondary rope **26** with respect to the arm **12**.

Referring to FIG. **3**, when the slide **14** is driven by the movement of the primary rope **25** to slide toward the upper end of the pole **11**, the distance between the slide **14** and the pin **29** that fixes proximate end of the secondary rope **26** to the pole **11** is increased, which causes the runner **21** to move toward the crown **19** and thus open the panel **18**, as shown in FIG. **1**.

On the other hand, when the slide **14** is moved in an opposite direction, toward the lower end of the pole **11**, such releases the runner **21**. By means of a spring force provided by the stretchers **22**, the panel **18** is driven to close, as shown in FIG. **2**.

In addition, when the panel **18** is fully opened, the tabs formed on the distal end of the arm **12** are moved into the grooves **39** of the crown **19**. By means of the tension of the secondary rope **26**, the panel **18** is securely attached to the distal end of the arm **12**. The secondary rope **26** may then be fixed in position by the locking device **17**, as described above. Further driving of the primary rope **25** to move the slide **14** causes the panel **18** to rotate to a different direction, as indicated by the dashed lines shown in FIG. **9**.

Since the movement of the slide **14** is controlled by the primary rope **25** in a continuous manner, the rotation of the arm **12** with respect to the slide **14** is, in general, stepless. In other words, the panel **18** may be opened to any extent between the open position and closed position in a stepless fashion. Furthermore, the adjustment of the orientation of the panel **18** can also be achieved in a stepless fashion.

It is apparent to those skilled in the art to replace the primary rope **25** and the pulley **27** by a timing belt and the associated gear, or a chain and sprocket. Corresponding thereto, a gear or a sprocket may be mounted to the axle **28** of the crank driving device **16**, providing a more precise control of the movement of the slide **14**.

FIG. **7** shows another embodiment of the locking device **17**. The locking device of FIG. **7** comprises a support member **40** supported inside the arm **12** by a bar **42** extending beyond the arm **12** with a nut **43** attached thereto. Two locking blocks **41** are attached to the support member **40** inside the arm **12**. A gap is defined between the locking blocks **41** and the inside surface of the arm **12** through which the secondary rope **26** extends. When the nut **43** is actuated, the bar **42** drives support member **40** to force the locking blocks **41** toward the secondary rope **26**, thereby pinching the secondary rope **26** between the locking blocks **41** and the inside surface of the arm **12** and thus effectively fixing the secondary rope **26** in position. On the other hand, releasing the nut **43** allows the locking blocks **41** to move away from the secondary rope **26** and thus releasing the secondary rope **26**.

FIG. **8** shows a different embodiment of the crank driving device **16** of the present invention. The crank driving device **16** of FIG. **8** comprises a casing **32** attached to the pole **11** and a crank member **33** extending into the casing **32** with an input gear **44** fixed thereon. Two output gears **45**, **46** respectively arranged on upper and lower sides of the input gear **44** and mating with the input gear **44**. A predetermined length of each end of the primary rope **25** is fixed to and wound around a shaft of each output gear **45**, **46** whereby when the input gear **44** drives the output gears **45**, **46** to rotate in opposite directions, the primary rope **25** may be unwound from one of the output gears **45**, **46** and further wound to the other one of the output gear **45**, **46** so as to smoothly and continuously move the slide **14** along the pole **11**.

Although the present invention has been described with respect to the preferred embodiments, it is contemplated that a variety of modifications, variations and substitutions may be done without departing from the scope of the present invention that is intended to be defined by the appended claims.

What is claimed is:

1. An umbrella comprising:

a tubular pole having a lower end mounted to a base;

a slide attached to and movable along the pole;

a tubular arm having a proximate end pivotally connected to the slide and an opposite remote end;

a link having opposite ends respectively pivotally connected to the pole and the arm whereby when the slide is moved along the pole, the arm is driven to rotate about the pivotal connections with the slide and the link between an open position and a closed position;

a crank driving device mounted to the pole comprising an axle drivingly coupled to a crank member located outside the pole;

a rope system comprising a primary rope and a secondary rope, the primary rope being movably received in the pole and arranged between a first pulley and the axle of the crank driving device to be driven by the crank member, the primary rope being coupled to the slide whereby when the primary rope is actuated, the slide is moved along the pole, the secondary rope extending through the arm and having a proximate end fixed to the pole via a second pulley mounted on the slide and a remote end having a length extending beyond the remote end of the arm whereby when the slide is moved along the pole, the length of the remote end of the secondary rope extending beyond the remote end of the arm changes;

a panel means comprising a crown movable with respect to the remote end of the arm, a panel attached to the crown, ribs radially extending from the crown for supporting the panel, a runner spaced from and movable with respect to the crown and stretchers connecting the runner to the ribs, the crown defining a through hole through which the length of the remote end of the secondary rope extends for being attached to the runner whereby when the slide is moved along the pole, the length of the remote end of the secondary rope changes causing the runner to move toward/away from the crown for opening/closing the panel via the stretchers and the ribs;

means for fixing the crown to the remote end of the remote end of the arm when the arm is at the open position whereby further moving the slide in a direction consistent with movement of the arm from the closed position to the open position causes the panel means to rotate with the arm and thus adjusting orientation of the panel means; and

locking means for fixing the secondary rope at a secured position corresponding to the open position of the arm, the locking means comprising a locking block arranged inside the arm for forcibly engaging with the secondary rope and thus fixing the secondary rope.

2. The umbrella as claimed in claim **1**, wherein the remote end of the arm forms a pair of first tabs spaced from each other, a third pulley is rotatably supported between the first tabs of the arm by a pivot pin for guiding the remote end of the secondary rope toward the crown, the crown forming a pair of spaced second tabs defining aligned slots for movably receiving opposite ends of the pivot pin for guiding the movement of the crown with respect to the remote end of the arm, grooves being defined in the crown for receiving the first tabs therein when the crown is moved to the remote end of the arm thereby securely fixing the panel means to the remote end of the arm.

3. The umbrella as claimed in claim **1**, wherein the primary rope comprises a timing belt and a chain.

4. The umbrella as claimed in claim **3**, wherein the first pulley and the axle of the crank member comprise toothed wheels.

5. The umbrella as claimed in claim **1**, wherein the locking means comprises a locking member supported in the arm of an eccentric shaft coupled to a knob located outside the arm, whereby by rotating the knob, the locking member is driven by the eccentric shaft to forcibly engage the secondary rope.

6. The umbrella as claimed in claim **1**, wherein the locking means comprises support member supporting two locking blocks in the arm, a bar mounted to the support member and having an end extending beyond the arm with a nut attached thereto, whereby by rotating the nut, the locking blocks are driven by the bar to forcibly engage the secondary rope.

7. The umbrella as claimed in claim **1**, wherein the crank driving device comprises an input gear mounted to the axle and two output gears mating the input gear to be driven thereby in opposite directions, ends of the primary rope being fixed to and partially wound around shafts of the output gears whereby when the input gear is rotated by the crank member, the output gear rotate in opposite direction to respectively unwind and further wind the ends of the primary rope and thus moving the slide along the pole.

* * * * *