UNITED STATES DISTRICT COURT
NORTHERN DISTRICT OF GEORGIA
ATLANTA DIVISION

ATLEISURE, LLC	)	
	)	
Plaintiff,	)	Civil Action No. 1:20-cv-
	)	
v.	)	
	)	JURY TRIAL DEMANDED
SUNVILLA CORPORATION	)	
	)	
Defendant.	)	

COMPLAINT

Plaintiff ATLeisure, LLC ('Plaintiff' or 'ATLeisure'), and for its Complaint against Defendant Sunvilla Corporation ('Defendant') alleges as follows:

I. NATURE OF THE ACTION

1. This is an action for willful patent infringement of ATLeisure's U.S. Patent No. 8,104,492 (''492 Patent') (attached Exhibit 1). ATLeisure asserts the '492 Patent against the Defendant for making, using, offering to sell, selling, and/or importing various products for patio and outdoor umbrellas, including, but not limited to those sold under the description "SunVilla 10' Offset Umbrella" (Item no: 1396167) ('Accused Umbrellas'), or inducing others to infringe the '492 Patent.

II. JURISDICTION AND VENUE

2. ATLeisure's patent infringement claims for arise under the patent laws of the United States, Title 35 of the United States Code. Accordingly, this Court has jurisdiction over the subject matter of this Complaint under 28 U.S.C. §§ 1331 and 1338(a).

3. This Court has personal jurisdiction over the Defendant by reason of the business that it has transacted and continue to transact in this judicial district and division. In particular, Defendant has made and continue to make, have offered to sell and continue to offer to sell, have sold and continue to sell, have used and continue to use, and have imported and continue to import patio and outdoor umbrellas that infringe valid and enforceable claims of the '492 Patent.

4. The Court has personal jurisdiction over Defendant pursuant to Georgia's Long Arm Statute because Defendant has committed tortious acts within the state from which the below causes of action arise, and/or have committed tortious actions outside of Georgia with the intent to cause—and in fact caused—injury in Georgia and to Georgia, as explained in more detail below.

5. Venue is proper in this district and division pursuant to 28 U.S.C. § 1391, 28 U.S.C. § 1400, and Local Rule 3.1 B.

III. PARTIES

A. Plaintiff ATLeisure, LLC.

6. Plaintiff is a limited liability company organized under the laws of Delaware, with its principal place of business located at 1040 Boulevard SE, Suite B, Atlanta, Georgia 30312.

7. ATLeisure designs, manufactures, markets, and sells umbrellas, furniture, and fire pits for outdoor living. Specifically, ATLeisure's patio and outdoor umbrellas are designed, manufactured, sold, and distributed throughout the United States and in this judicial district and division by ATLeisure.

B. Defendant Sunvilla Corporation.

8. Upon information and belief, Defendant Sunvilla Corporation is incorporated in California, with its principle place of business located at 1116 Coiner Court, City of Industry, California 91748. Upon further information and belief, Defendant may be served through its agent for service of process, Kari Liu, at the same address.

9. Upon information and belief, Defendant does business in this district at its office located at 780 Douglas Hills Rd, Lithia Springs, Georgia 30122.

10. Upon information and belief, Defendant is in the business of designing, manufacturing, distributing, selling, marketing, and importing patio and

outdoor umbrellas.

11. Defendant is a direct competitor of ATLeisure's umbrella business.

IV. ATLEISURE® - CREATE YOUR ESCAPE®

12. Established in 2011, ATLeisure designs, manufactures, and supplies the outdoor furniture and accessories market with proprietary, innovative products. One of its primary product lines is outdoor, patio umbrellas. Its mission is to design items and collections with timeless style and quality that will help its clients "CREATE YOUR ESCAPE®."

13. Headquartered in Atlanta, Georgia, ATLeisure is a fully integrated US, European, and China Operation. It offers state-of-the-art manufacturing facilities located in Yongkang and Linhai, China. ATLeisure represents an exceptional sales and design force with a combined 50 years' experience and is committed to delivering high quality products, patented designs, and superior customer service worldwide.

14. ATLeisure furnishes its clients the ability to extend interior living to the outdoors. Its seasoned designers continually create a variety of trendsetting collections and styles to create your escape. Homeowners are no longer limited to dining sets and chaise lounges. ATLeisure offers a variety of outdoor living options consisting of comfortable deep-seating groups, classic dining, outdoor

bars, a wide selection of umbrella shade options and beach accessories. Its product lines feature extruded aluminum, all-weather wicker, steel, and other long-lasting materials maintaining both beauty and durability to last.

15. ATLeisure has positioned itself as a leader of outdoor living products with a continued commitment to "on-trend" patented designs and inventions, use of long-lasting materials and superior engineering.

16. ATLeisure owns numerous patents and trademarks in the United States and around the globe.

V. FACTUAL BACKGROUND

A. ATLeisure's U.S. Patent No. 8,104,492

17. On January 31, 2012, the United States Patent and Trademark Office duly and legally issued the '492 Patent, titled, "Adjustable Offset Umbrella."

18. ATLeisure has exclusive rights in the '492 Patent, including the right to use and enforce the patent.

B. Defendant's Accused Umbrellas

19. Upon information and belief, Defendant, either directly or through intermediaries (including distributors, retailers, and others), ships, distributes, offers for sale, sells, and advertises products within the United States, the State of Georgia, and this judicial district and division. For instance, and upon

information and belief, two such intermediaries include Costco Wholesale Corporation ('Costco') and The Home Depot, Inc. ('Home Depot').

20. Upon information and belief, Defendant's Accused Umbrellas are sold commonly under its SunVilla and Royal Garden brands, but are also sold through private label. *See, e.g.,* 10 ft. x 10 ft. Commercial Aluminum Square Offset Cantilever Outdoor Patio Umbrella in Sunbrella Cast Shale *available at* https://www.homedepot.com/p/10-ft-x-10-ft-Commercial-Aluminum-Square-Offset-Cantilever-Outdoor-Patio-Umbrella-in-Sunbrella-Cast-Shale-YJAF-819C-SCS/305961740 (last visited Nov. 3, 2020)(branded as Hampton Bay®). Upon additional information and belief, Defendant owns and uses other brands including Royal Shade and Portica.

C. Costco Wholesale Corporation - SunVilla

21. Upon information and belief, Costco makes, uses, offers to sell, sells, or imports Defendant's patio and outdoor umbrellas.

22. One of Costco's Accused Umbrellas include the "SunVilla 10' Offset Umbrella, 1396167." Exhibit 2 (Costco Accused Umbrella Listing) *available at* https://www.costco.com/sunvilla-10'-offset-umbrella.product.100536193.html (last visited Oct. 5, 2020).

23. Upon review of this Accused Umbrella and its accompanying instructions

(Exhibit 3), the Accused Umbrella features ATLeisure's technology protected by the '492 Patent. *Compare* Exhibit 1, p. 1 ('492 Patent) *with* Exhibit 3, p. 8 (SunVilla 10' Offset Umbrella Instructions), depicted below.

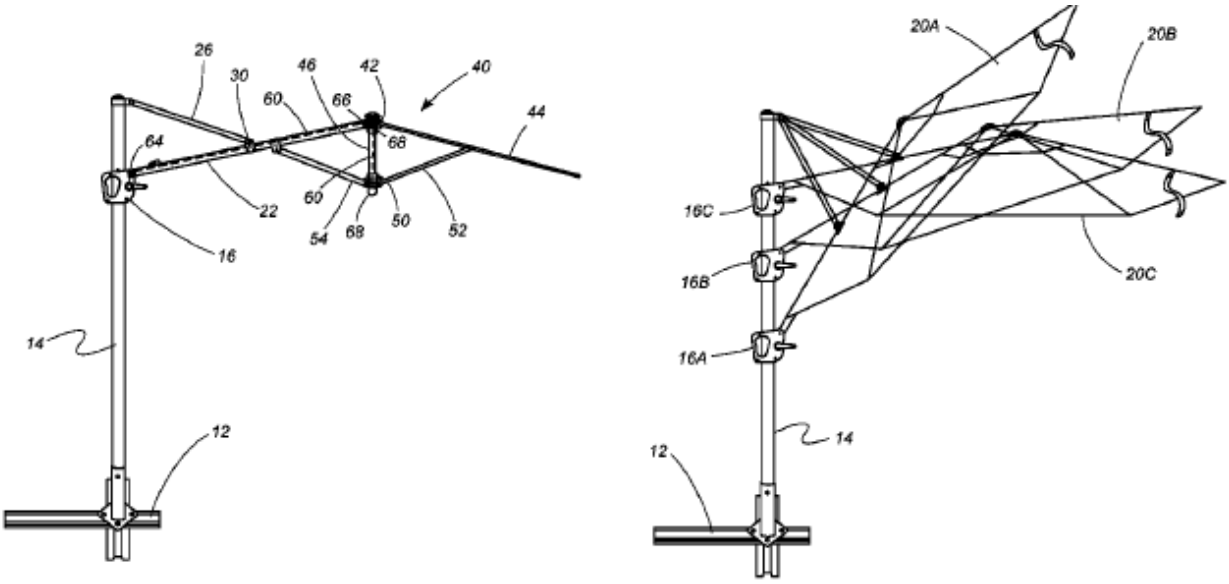

Exhibit 1, p. 1 ('492 Patent - Adjustable Offset Umbrella)

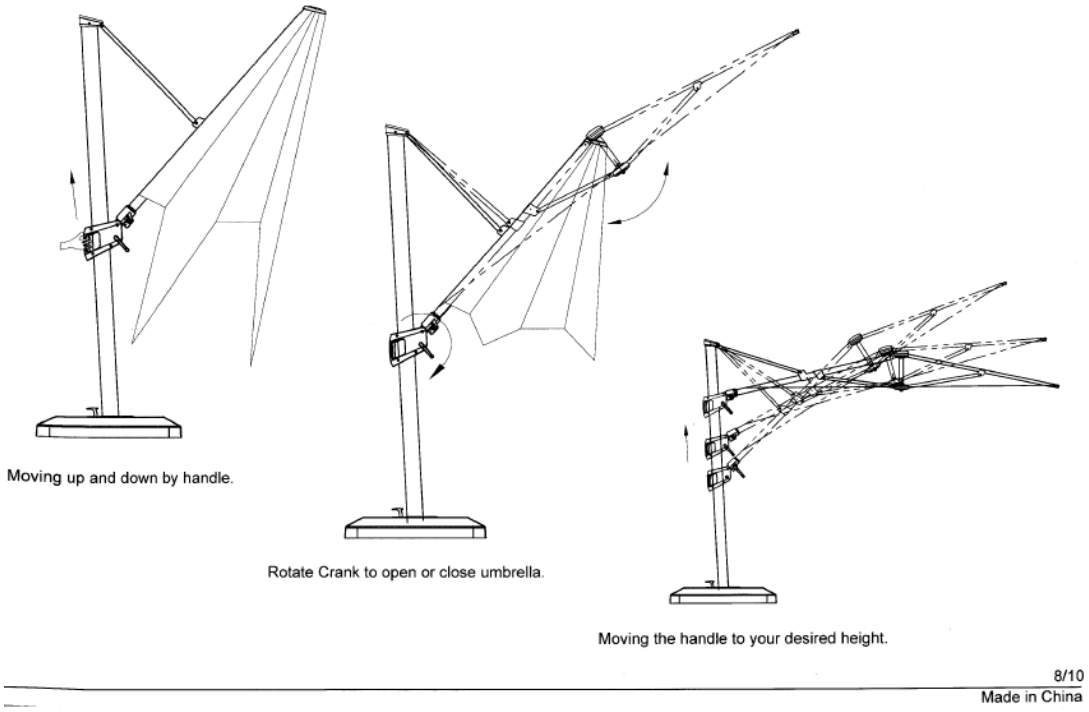

Exhibit 3, p. 8 (SunVilla 10' Offset Umbrella Instructions)

D. The Home Depot, Inc. – Royal Garden

24. Similarly, Home Depot makes, uses, offers to sell, sells, or imports Defendant's patio and outdoor umbrellas. Two of Home Depot's Accused Umbrellas include -

1. Hampton Bay 10 ft. x 10 ft. Commercial Aluminum Square Offset Cantilever Outdoor Patio Umbrella in Sunbrella Cast Shale[1] Exhibit 4 (Royal Garden 10' x 10' Offset Umbrella Instructions).
2. Hampton Bay 10 ft. x 12 ft. Aluminum Rectangle Offset Cantilever Outdoor Patio Umbrella in Cafe[2] Exhibit 5 - Royal Garden 10' x 12' Offset Umbrella Instructions.

25. Upon information and belief, Home Depot's Accused Umbrellas are private label versions of Sunvilla Corporation's Royal Garden square offset umbrella line.

E. Defendant's Patent Infringement

26. Defendant and its customers, namely Costco and Home Depot, infringe at least Claim 1 of the '492 Patent. *See, e.g.,* Exhibit 6 (Preliminary Claim

---

[1] Internet #305961740; Model # YJAF-819C-SCS *available at* https://www.homedepot.com/p/Hampton-Bay-10-ft-x-10-ft-Commercial-Aluminum-Square-Offset-Cantilever-Outdoor-Patio-Umbrella-in-Sunbrella-Cast-Shale-YJAF-819C-SCS/305961740 (last visited Feb. 13, 2020).

[2] Internet #305961738Model # YJAF-038G-Café *available at* https://www.homedepot.com/p/Hampton-Bay-10-ft-x-12-ft-Aluminum-Rectangle-Offset-Cantilever-Outdoor-Patio-Umbrella-in-Cafe-YJAF-038G-Cafe/305961738 (last visited Feb. 13, 2020).

Chart)(analyzing Costco's SunVilla Accused Umbrella against Claim 1).

27. Defendant has committed and continues to commit acts of willful patent infringement within the United States, in the State of Georgia and in this judicial district and division. For example, upon information and belief, Defendant has offered for sale and sold various patio and outdoor umbrellas, including the Accused Umbrellas to Costco. On further information and belief, Costco sells the Accused Umbrellas across the United States, including Atlanta, Georgia.

VI. COUNT I: WILLFUL INFRINGEMENT OF THE '492 PATENT

28. ATLeisure restates and realleges Paragraphs 1 to 27 as if fully stated herein.

29. Upon information and belief, Defendant manufactures, imports, offers for sale and/or sells products in the United States and in this judicial district directly infringe one or more claims of the '492 Patent as set forth in the claim chart above.

30. Defendant, in violation of 35 U.S.C. § 271, has willfully infringed and continue to infringe the '492 Patent.

31. ATLeisure, under 35 U.S.C. § 284, may recover damages adequate to compensate for the infringement of the Defendant.

32. ATLeisure has been, and continues to be, damaged and irreparably

harmed by the infringement of the Defendant, which will continue unless this Court enjoins the Defendant.

33. The infringement of the '492 Patent by the Defendant has been, and continues to be, deliberate, willful and knowing.

34. The Court should declare this an exceptional case under 35 U.S.C. § 285, entitling ATLeisure to recover treble damages and attorneys' fees.

VII. COUNT II: INDUCED INFRINGEMENT OF THE '492 PATENT

35. ATLeisure restates and realleges Paragraphs 1 to 27 as if fully stated herein.

36. Defendant, in violation of 35 US.C. § 271, has and continues to induce others, including at least Costco and Home Depot, to directly infringe the '492 Patent.

37. Defendant's customers directly infringe the '492 Patent by offering for sale and selling the Accused Umbrellas identified above, as encouraged, promoted and instructed by Defendant.

38. Upon information and belief, Defendant was aware of the '492 Patent and knew that the acts by its customers, if taken, would constitute infringement of the '492 Patent or the Defendant believed there was a high probability that the acts, if taken, would constitute infringement of the '492 Patent but deliberately

avoided confirming that belief.

39. Upon information and belief, Defendant is on notice of its infringement of one or more of the claims of the '492 Patent, yet Defendant has continued to sell products that infringe to its customers.

40. With knowledge of, or a willful blindness to, the '492 Patent, Defendant encouraged its customers to infringe the '492 Patent through offering for sale and selling its Accused Umbrellas.

41. ATLeisure, under 35 U.S.C. § 284, may recover damages adequate to compensate for the infringement of the Defendant.

42. ATLeisure has been, and continues to be, damaged and irreparably harmed by the infringement of the Defendant, which will continue unless this Court enjoins the Defendant.

43. The infringement of the '492 Patent by the Defendant has been, and continues to be, deliberate, willful, and knowing.

44. The Court should declare this an exceptional case under 35 U.S.C. § 285, entitling ATLeisure to recover treble damages and attorneys' fees.

PRAYER FOR RELIEF

ATLeisure prays for judgment in its favor and against the Defendant as follows:

(a) That the Defendant has infringed or induced the infringement of one or more claims of the '492 Patent;

(b) That the Defendant's infringement has been willful;

(c) That this case be declared an exceptional case under 35 U.S.C. § 285;

(d) That ATLeisure be awarded damages adequate to compensate ATLeisure for the Defendant's infringement of the '492 Patent, including lost profits, but in no event less than a reasonable royalty;

(e) That ATLeisure's damages be trebled;

(f) That ATLeisure be awarded its attorneys' fees and costs;

(g) That this Court enjoin the Defendant, its officers, directors, principals, agents, servants, employees, successors, assigns, affiliates, and all that are in active concert or participation with them, or any of them, from further infringement of the '492 Patent;

(h) That ATLeisure be awarded pre- and post-judgment interest on all damages;

(i) That ATLeisure be awarded all its costs and expenses in this action; and

(]) Such further and other relief as the Court may deem just and proper.

----------*Signature Page Follows*----------

JURY TRIAL DEMANDED

Pursuant to Federal Rule of Civil Procedure 38, Plaintiff hereby demands a trial by jury on all issues so triable.

By: /s/ Jeffrey T. Breloski
Jeffrey T. Breloski
Georgia Bar No. 858291
Florida Bar No. 18077
USPTO Reg. No. 60,952
E-mail: jbreloski@ATLawip.com

ATLAW*IP* LLC
1265 Stuart Ridge
Johns Creek, Georgia 30022
678.667.3491

Ryan T. Santurri
Pro Hac Vice to Be Applied
Florida Bar No. 15698
USPTO Reg. No. 61,894
Email: rsanturri@allendyer.com

ALLEN, DYER, DOPPELT + GILCHRIST, P.A.
255 South Orange Avenue, Suite 1401
Post Office Box 3791
Orlando, Florida 32801
407.841.2330

Attorneys for Plaintiff

CERTIFICATE OF COMPLIANCE

Pursuant to LR 7.1D, the undersigned counsel certify that the foregoing has been prepared in Book Antiqua 13 point, one of the four fonts and points approved by the Court in LR 5.1C.

By: /Jeffrey T. Breloski
Jeffrey T. Breloski
Georgia Bar No. 858291
Florida Bar No. 18077
USPTO Reg. No. 60,952
E-mail: jbreloski@ATLawip.com