US008535283B2

(12) **United States Patent**
Heaton et al.

(10) **Patent No.: US 8,535,283 B2**
(45) **Date of Patent: Sep. 17, 2013**

(54) **SYSTEM AND METHOD FOR APPLYING REDUCED PRESSURE AT A TISSUE SITE**

(75) Inventors: **Keith Patrick Heaton**, Poole (GB); **Ian James Hardman**, Bournemouth (GB)

(73) Assignee: **KCI Licensing, Inc.**, San Antonio, TX (US)

(*) Notice: Subject to any disclaimer, the term of this patent is extended or adjusted under 35 U.S.C. 154(b) by 276 days.

(21) Appl. No.: **12/069,262**

(22) Filed: **Feb. 8, 2008**

(65) **Prior Publication Data**

US 2008/0200905 A1 Aug. 21, 2008

Related U.S. Application Data

(60) Provisional application No. 60/900,555, filed on Feb. 9, 2007.

(51) **Int. Cl.**
A61M 27/00 (2006.01)

(52) **U.S. Cl.**
USPC **604/319**; 604/322; 604/543

(58) **Field of Classification Search**
USPC 604/313, 315, 316, 543, 540, 541, 604/328
See application file for complete search history.

(56) **References Cited**

U.S. PATENT DOCUMENTS

1,355,846	A	10/1920	Rannells	
2,547,758	A	4/1951	Keeling	
2,632,443	A	3/1953	Lesher	
2,682,873	A	7/1954	Evans et al.	
2,910,763	A	11/1959	Lauterbach	
2,969,057	A	1/1961	Simmons	
3,066,672	A	12/1962	Crosby, Jr. et al.	
3,084,691	A *	4/1963	Stoner	604/134

(Continued)

FOREIGN PATENT DOCUMENTS

AU	550575 A1	8/1982
AU	745271	4/1999

(Continued)

OTHER PUBLICATIONS

N.A. Bagautdinov, "Variant of External Vacuum Aspiration in the Treatment of Purulent Diseases of the Soft Tissues," *Current Problems in Modem Clinical Surgery: Interdepartmental Collection*, edited by V. Ye Volkov et al. (Chuvashia State University, Cheboksary, U.S.S.R. 1986);pp. 94-96.

(Continued)

Primary Examiner — Susan Su

(57) **ABSTRACT**

The illustrative embodiments described herein are directed to a manually-actuated pump and method for applying reduced pressure at a tissue site. The manually-actuated pump includes at least one variable volume chamber that is manually compressible into a plurality of positions. The manually-actuated pump includes a fixed volume chamber in communication with the at least one variable volume chamber. The manually-actuated pump also includes a filter housing having a hydrophobic filter that prevents liquid from entering the at least one variable volume chamber. The fixed volume chamber is coupled to the at least one variable volume chamber via the filter housing. The filter housing is located in between the at least one variable volume chamber and the fixed volume chamber. The fixed volume chamber has reduced pressure that is applied to the tissue site in response to a movement of the at least one variable volume chamber from a compressed position in the plurality of positions to an uncompressed position in the plurality of positions.

24 Claims, 11 Drawing Sheets

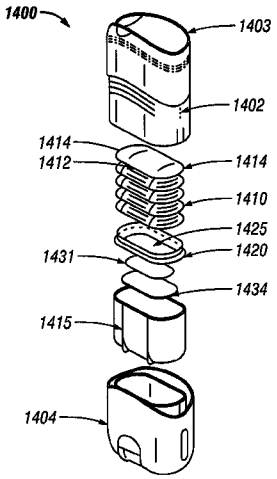

Imperative Care v. Inari Medical
US Patent 11,969,333
Imperative Care Ex. 1011

(56) **References Cited**

U.S. PATENT DOCUMENTS

3,367,332 A 2/1968 Groves
3,376,868 A 4/1968 Mondiadis
3,520,300 A 7/1970 Flower Jr.
3,568,675 A 3/1971 Harvey
3,648,692 A 3/1972 Wheeler
3,682,180 A 8/1972 McFarlane
3,742,952 A 7/1973 Magers et al.
3,774,611 A 11/1973 Tussey et al.
3,779,243 A 12/1973 Tussey et al.
3,826,254 A 7/1974 Mellor
3,875,941 A * 4/1975 Adair 604/540
4,080,970 A 3/1978 Miller
4,096,853 A 6/1978 Weigand
4,098,434 A 7/1978 Uhlig
4,132,332 A * 1/1979 Wassilieff 222/387
4,139,004 A 2/1979 Gonzalez, Jr.
4,141,361 A 2/1979 Snyder
4,165,748 A 8/1979 Johnson
4,184,510 A 1/1980 Murry et al.
4,233,969 A 11/1980 Lock et al.
4,245,630 A 1/1981 Lloyd et al.
4,256,109 A 3/1981 Nichols
4,261,363 A 4/1981 Russo
4,275,721 A 6/1981 Olson
4,278,089 A 7/1981 Huck et al.
4,284,079 A 8/1981 Adair
4,297,995 A 11/1981 Golub
4,333,468 A 6/1982 Geist
4,372,297 A 2/1983 Perlin
4,373,519 A 2/1983 Errede et al.
4,382,441 A 5/1983 Svedman
4,392,853 A 7/1983 Muto
4,392,858 A 7/1983 George et al.
4,419,097 A 12/1983 Rowland
4,460,354 A 7/1984 Weilbacher et al.
4,465,485 A 8/1984 Kashmer et al.
4,475,909 A 10/1984 Eisenberg
4,480,638 A 11/1984 Schmid
4,525,166 A 6/1985 Leclerc
4,525,374 A 6/1985 Vaillancourt
4,529,402 A * 7/1985 Weilbacher et al. 604/133
4,540,412 A 9/1985 Van Overloop
4,543,100 A 9/1985 Brodsky
4,548,202 A 10/1985 Duncan
4,551,139 A 11/1985 Plaas et al.
4,569,348 A 2/1986 Hasslinger
4,578,060 A * 3/1986 Huck et al. 604/133
4,605,399 A 8/1986 Weston et al.
4,608,041 A 8/1986 Nielsen
4,640,688 A 2/1987 Hauser
4,642,088 A * 2/1987 Gunter 604/6.15
4,643,719 A * 2/1987 Garth et al. 604/73
4,655,754 A 4/1987 Richmond et al.
4,664,652 A 5/1987 Weilbacher
4,664,662 A 5/1987 Webster
4,710,165 A 12/1987 McNeil et al.
4,733,659 A 3/1988 Edenbaum et al.
4,743,232 A 5/1988 Kruger
4,758,220 A 7/1988 Sundblom et al.
4,787,888 A 11/1988 Fox
4,798,583 A * 1/1989 Beck et al. 604/48
4,826,494 A 5/1989 Richmond et al.
4,828,546 A 5/1989 McNeil et al.
4,838,883 A 6/1989 Matsuura
4,840,187 A 6/1989 Brazier
4,863,449 A 9/1989 Therriault et al.
4,872,450 A 10/1989 Austad
4,878,901 A 11/1989 Sachse
4,897,081 A 1/1990 Poirier et al.
4,903,726 A 2/1990 Martin et al.
4,906,233 A 3/1990 Moriuchi et al.
4,906,240 A 3/1990 Reed et al.
4,919,654 A 4/1990 Kalt et al.
4,941,882 A 7/1990 Ward et al.
4,953,565 A 9/1990 Tachibana et al.
4,969,880 A 11/1990 Zamierowski
4,981,474 A 1/1991 Bopp et al.
4,985,019 A 1/1991 Michelson
5,019,059 A * 5/1991 Goldberg et al. 604/317
5,024,653 A * 6/1991 Kohnke 604/35
5,037,397 A 8/1991 Kalt et al.
5,086,170 A 2/1992 Luheshi et al.
5,092,858 A 3/1992 Benson et al.
5,100,396 A 3/1992 Zamierowski
5,102,404 A 4/1992 Goldberg et al.
5,112,323 A 5/1992 Winkler et al.
5,134,994 A 8/1992 Say
5,149,331 A 9/1992 Ferdman et al.
5,167,613 A 12/1992 Karami et al.
5,176,663 A 1/1993 Svedman et al.
5,215,522 A 6/1993 Page et al.
5,226,877 A 7/1993 Epstein
5,232,453 A 8/1993 Plass et al.
5,261,893 A 11/1993 Zamierowski
5,278,100 A 1/1994 Doan et al.
5,279,550 A 1/1994 Habib et al.
5,298,015 A 3/1994 Komatsuzaki et al.
5,304,129 A * 4/1994 Forgach 604/74
5,318,548 A * 6/1994 Filshie 604/319
5,342,329 A 8/1994 Croquevielle
5,342,376 A 8/1994 Ruff
5,344,415 A 9/1994 DeBusk et al.
5,358,494 A 10/1994 Svedman
5,437,622 A 8/1995 Carion
5,437,651 A 8/1995 Todd et al.
5,527,293 A 6/1996 Zamierowski
5,542,939 A 8/1996 Onodera et al.
5,549,584 A 8/1996 Gross
5,554,011 A 9/1996 Bales et al.
5,556,375 A 9/1996 Ewall
5,592,948 A * 1/1997 Gatten 600/576
5,607,388 A 3/1997 Ewall
5,636,643 A 6/1997 Argenta et al.
5,645,081 A 7/1997 Argenta et al.
5,645,540 A * 7/1997 Henniges et al. 604/320
5,714,696 A * 2/1998 Yeamans 73/863.84
5,718,355 A 2/1998 Garby et al.
5,819,990 A 10/1998 Cimentepe et al.
5,827,246 A 10/1998 Bowen
5,830,198 A * 11/1998 Henniges et al. 604/320
6,024,120 A 2/2000 Yam et al.
6,024,731 A 2/2000 Seddon et al.
6,071,267 A 6/2000 Zamierowski
6,135,116 A 10/2000 Vogel et al.
6,174,306 B1 1/2001 Fleischmann
6,241,747 B1 6/2001 Ruff
6,261,276 B1 * 7/2001 Reitsma 604/319
6,287,316 B1 9/2001 Agarwal et al.
6,345,623 B1 2/2002 Heaton et al.
6,485,007 B1 11/2002 Duelli
6,488,643 B1 12/2002 Tumey et al.
6,493,568 B1 12/2002 Bell et al.
6,553,998 B2 4/2003 Heaton et al.
6,626,891 B2 9/2003 Ohmstede
6,648,862 B2 11/2003 Watson
6,656,149 B2 12/2003 Ladd
6,745,765 B2 6/2004 Kullik et al.
6,814,079 B2 11/2004 Heaton et al.
6,979,324 B2 12/2005 Bybordi et al.
7,004,915 B2 2/2006 Boynton et al.
7,070,584 B2 7/2006 Johnson et al.
7,625,362 B2 * 12/2009 Boehringer et al. 604/305
8,007,257 B2 8/2011 Heaton et al.
2002/0065494 A1 5/2002 Lockwood et al.
2002/0077661 A1 6/2002 Saadat
2002/0115951 A1 8/2002 Norstrem et al.
2002/0120185 A1 8/2002 Johnson
2002/0143286 A1 10/2002 Tumey
2002/0198504 A1 12/2002 Risk, Jr. et al.
2003/0040687 A1 * 2/2003 Boynton et al. 601/6
2004/0064132 A1 4/2004 Boehringer et al.
2004/0243105 A1 * 12/2004 Swan et al. 604/543
2005/0004534 A1 1/2005 Lockwood et al.
2005/0070858 A1 3/2005 Lockwood et al.

2005/0087556	A1	4/2005	Signorini	
2005/0137539	A1	6/2005	Biggie et al.	
2005/0197639	A1	9/2005	Mombrinie	
2005/0261642	A1	11/2005	Weston	
2005/0261643	A1	11/2005	Bybordi et al.	
2006/0025727	A1	2/2006	Boehringer et al.	
2006/0216171	A1	9/2006	Hernandez	
2006/0229586	A1	10/2006	Faries, Jr.	
2007/0214692	A1	9/2007	Ferrara	
2008/0183156	A1*	7/2008	Yoo	604/541
2008/0306456	A1*	12/2008	Riesinger	604/316

FOREIGN PATENT DOCUMENTS

AU	755496		2/2002
CA	2005436		6/1990
CN	2142728	Y	9/1993
CN	1571682	A	1/2005
CN	2745582	Y	12/2005
CN	2829771	Y	10/2006
DE	26 40 413	A1	3/1978
DE	43 06 478	A1	9/1994
DE	295 04 378	U1	10/1995
EP	0100148	A1	2/1984
EP	0117632	A2	9/1984
EP	0161865	A2	11/1985
EP	0358302	A2	3/1990
EP	1018967	B1	8/2004
GB	692578		6/1953
GB	2 195 255	A	4/1988
GB	2 197 789	A	6/1988
GB	2 220 357	A	1/1990
GB	2 235 877	A	3/1991
GB	2 333 965	A	8/1999
GB	2 329 127	B	8/2000
JP	S59-19144		2/1984
JP	60050296	A	3/1985
JP	4129536		4/1992
SG	71559		4/2002
WO	WO 80/02182		10/1980
WO	WO 87/04626		8/1987
WO	WO 90/10424		9/1990
WO	WO 93/09727		5/1993
WO	WO 94/20041		9/1994
WO	WO 96/05873		2/1996
WO	WO 97/18007		5/1997
WO	WO 99/13793		3/1999
WO	WO 2006/114648	A2	11/2006
WO	WO 2007/013064	A1	2/2007
WO	WO 2007/133618	A2	11/2007
WO	WO 2009/135171	A2	11/2009

OTHER PUBLICATIONS

K.F. Jeter, T.E. Tintle, and M. Chariker, Managing Draining Wounds and Fistulae: "New and Established Methods," *Chronic Wound Care*, edited by D. Krasner (Health Management Publications, Inc., King of Prussia, PA 1990), pp. 240-246.

G. Živadinović, V. Đ ukić, Ž. Maksimović, Đ . Radak, and P. Peška, "Vacuum Therapy in the Treatment of Peripheral Blood Vessels," *Timok Medical Journal* 11 (1986), pp. 161-164.

F.E. Johnson, "An Improved Technique for Skin Graft Placement Using a Suction Drain," *Surgery, Gynecology, and Obstetrics* 159 (1984), pp. 584-585.

A.A. Safronov, Dissertation Abstract, *Vacuum Therapy of Trophic Ulcers of the Lower Leg with Simultaneous Autoplasty of the Skin* (Central Scientific Research Institute of Traumatology and Orthopedics, Moscow, U.S.S.R. 1967).

M. Schein, R. Saadia, J.R. Jamieson, and G.A.G. Decker, "The 'Sandwich Technique' in the Management of the Open Abdomen," *British Journal of Surgery* 73 (1986), pp. 369-370.

D.E. Tribble, An Improved Sump Drain-Irrigation Device of Simple Construction, *Archives of Surgery* 105 (1972) pp. 511-513.

M.J. Morykwas, L.C. Argenta, E.I. Shelton-Brown, and W. McGuirt, "Vacuum-Assisted Closure: A New Method for Wound Control and Treatment: Animal Studies and Basic Foundation," *Annals of Plastic Surgery* 38 (1997), pp. 553-562 (Morykwas I).

C.E. Tennants, "The Use of Hypermia in the Postoperative Treatment of Lesions of the Extremities and Thorax, "*Journal of the American Medical Association* 64 (1915), pp. 1548-1549.

Selections from W. Meyer and V. Schmieden, *Bier's Hyperemic Treatment in Surgery, Medicine, and the Specialties: A Manual of Its Practical Application*,(W.B. Saunders Co., Philadelphia, PA 1909), pp. 17-25, 44-64, 90-96, 167-170, and 210-211.

NPD 1000 Negative Pressure Wound Therapy System, Kalypto Medical, pp. 1-4.

Louis C. Argenta, MD and Michael J. Morykwas, PhD; "Vacuum-Assisted Closure: A New Method for Wound Control and Treatment: Clinical Experience"; Annals of Plastic Surgery, vol. 38, No. 6, Jun. 1997; pp. 563-576.

Susan Mendez-Eastmen, RN; "When Wounds Won't Heal" RN Jan. 1998, vol. 61 (1); Medical Economics Company, Inc., Montvale, NJ, USA; pp. 20-24.

James H. Blackburn, II, MD, et al; "Negative-Pressure Dressings as a Bolster for Skin Grafts"; Annals of Plastic Surgery, vol. 40, No. 5, May 1998, pp. 453-457.

John Masters; "Reliable, Inexpensive and Simple Suction Dressings"; Letter to the Editor, British Journal of Plastic Surgery, 1998, vol. 51 (3), p. 267; Elsevier Science/the British Association of Plastic Surgeons, UK.

S.E. Greer, et al "The Use of Subatmospheric Pressure Dressing Therapy to Close Lymphocutaneous Fistulas of the Groin" British Journal of Plastic Surgery (2000), 53, pp. 484-487.

George V. Letsou, MD., et al; "Stimulation of Adenylate Cyclase Activity in Cultured Endothelial Cells Subjected to Cyclic Stretch"; Journal of Cardiovascular Surgery, 31, 1990, pp. 634-639.

Orringer, Jay, et al; "Management of Wounds in Patients with Complex Enterocutaneous Fistulas"; Surgery, Gynecology & Obstetrics, Jul. 1987, vol. 165, pp. 79-80.

International Search Report for PCT International Application PCT/GB95/01983; Nov. 23, 1995.

PCT International Search Report for PCT International Application PCT/GB98/02713; Jan. 8, 1999.

PCT Written Opinion; PCT International Application PCT/GB98/02713; Jun. 8, 1999.

PCT International Examination and Search Report, PCT International Application PCT/GB96/02802; Jan. 15, 1998 & Apr. 29, 1997.

PCT Written Opinion, PCT International Application PCT/GB96/02802; Sep. 3, 1997.

Dattilo, Philip P., Jr., et al; "Medical Textiles: Application of an Absorbable Barbed Bi-directional Surgical Suture"; Journal of Textile and Apparel, Technology and Management, vol. 2, Issue 2, Spring 2002, pp. 1-5.

Kostyuchenok, B.M., et al; "Vacuum Treatment in the Surgical Management of Purulent Wounds"; Vestnik Khirurgi, Sep. 1986, pp. 18-21 and 6 page English translation thereof.

Davydov, Yu. A., et al; "Vacuum Therapy in the Treatment of Purulent Lactation Mastitis"; Vestnik Khirurgi, May 14, 1986, pp. 66-70, and 9 page English translation thereof.

Yusupov. Yu. N., et al; "Active Wound Drainage", Vestnik Khirurgi, vol. 138, Issue 4, 1987, and 7 page English translation thereof.

Davydov, Yu. A., et al; "Bacteriological and Cytological Assessment of Vacuum Therapy for Purulent Wounds"; Vestnik Khirurgi, Oct 1988, pp. 48-52, and 8 page English translation thereof.

Davydov, Yu. A., et al; "Concepts for the Clinical-Biological Management of the Wound Process in the Treatment of Purulent Wounds by Means of Vacuum Therapy"; Vestnik Khirurgi, Jul. 7, 1980, pp. 132-136, and 8 page English translation thereof.

Chariker, Mark E., M.D., et al; "Effective Management of incisional and cutaneous fistulae with closed suction wound drainage"; Contemporary Surgery, vol. 34, Jun. 1989, pp. 59-63.

Egnell Minor, Instruction Book, First Edition, 300 7502, Feb. 1975, pp. 24.

Egnell Minor: Addition to the Users Manual Concerning Overflow Protection—Concerns all Egnell Pumps, Feb. 3, 1983, pp. 2.

Svedman, P.: "Irrigation Treatment of Leg Ulcers", The Lancet, Sep. 3, 1983, pp. 532-534.

Chinn, Steven D. et al.: "Closed Wound Suction Drainage", The Journal of Foot Surgery, vol. 24, No. 1, 1985, pp. 76-81.

Arnljots, Björn et al.: "Irrigation Treatment in Split-Thickness Skin Grafting of Intractable Leg Ulcers", Scand J. Plast Reconstr. Surg., No. 19, 1985, pp. 211-213.
Svedman, P.: "A Dressing Allowing Continuous Treatment of a Biosurface", IRCS Medical Science: Biomedical Technology, Clinical Medicine, Surgery and Transplantation, vol. 7, 1979, p. 221.
Svedman, P. et al.: "A Dressing System Providing Fluid Supply and Suction Drainage Used for Continuous or Intermittent Irrigation", Annals of Plastic Surgery, vol. 17, No. 2, Aug. 1986, pp. 125-133.
International Search Report and Written Opinion date mailed Sep. 11, 2009; PCT Application No. PCT/US2009/042598.
V.A. Solovev et al., Guidelines, The Method of Treatment of Immature External Fistulas in the Upper Gastrointestinal Tract, editor-in-chief Prov. V.I. Parahonyak (S.M. Kirov Gorky State Medical Institute, Gorky, U.S.S.R. 1987) ("Solovev Guidelines").
V.A. Kuznetsov & N.a. Bagautdinov, "Vacuum and Vacuum-Sorption Treatment of Open Septic Wounds," in II All-Union Conference or Wounds and Wound Infections: Presentation Abstracts, edited by B.M. Kostyuchenok et al. (Moscow, U.S.S.R. Oct. 28-29, 1986) pp. 91-92 ("Bagautdinov II").
V.A. Solovev, Dissertation Abstract, Treatment and Prevention of Suture Failures after Gastric Resection (S.M. Kirov Gorky State Medical Institute, Gorky, U.S.S.R. 1988) ("Solovev Abstract").
PCT International Search Report for International Application No. PCT/US2008/001727 dated Jun. 30, 2008.
Restriction Requirement date mailed May 21, 2010 in U.S. Appl. No. 11/974,534.
Response to Restriction Requirement filed Jun. 21, 2010 in U.S. Appl. No. 11/974,534.
Partial Search Report date mailed Jul. 21, 2010 for PCT Application No. PCT/US2009/050126.
Non-Final Office Action date mailed Sep. 1, 2010 for U.S. Appl. No. 11/974,534.
Response filed Nov. 30, 2010 for U.S. Appl. No. 11/974,534.
Restriction Requirement date mailed Sep. 30, 2011 for U.S. Appl. No. 12/434,475.
Response filed Oct. 24, 2011 for U.S. Appl. No. 12/434,475.
Non-Final Office Action date mailed Dec. 5, 2011 for U.S. Appl. No. 12/434,579.
Non-Final Office Action date mailed Dec. 29, 2011 for U.S. Appl. No. 12/434,475.
Final Office Action date mailed Feb. 16, 2011 for U.S. Appl. No. 11/974,534.
Response filed Mar. 29, 2011 for U.S. Appl. No. 11/974,534.
Notice of Allowance date mailed Apr. 28, 2011 for U.S. Appl. No. 11/974,534.
Restriction Requirement date mailed Aug. 10, 2011 for U.S. Appl. No. 12/434,579.
Response filed Sep. 9, 2011 for U.S. Appl. No. 12/434,579.

* cited by examiner

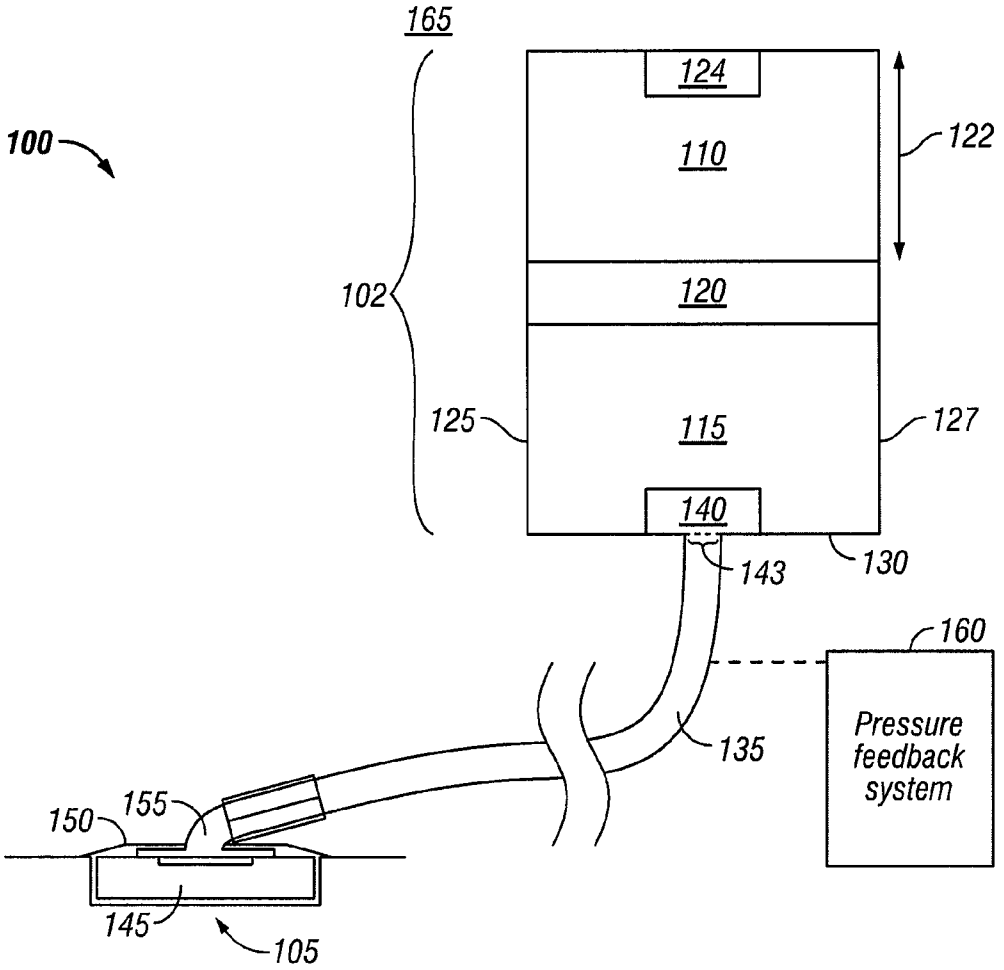
165
100
124
110
122
102
120
125
115
127
140
143
130
160
Pressure feedback system
135
150
155
145
105

FIG. 1

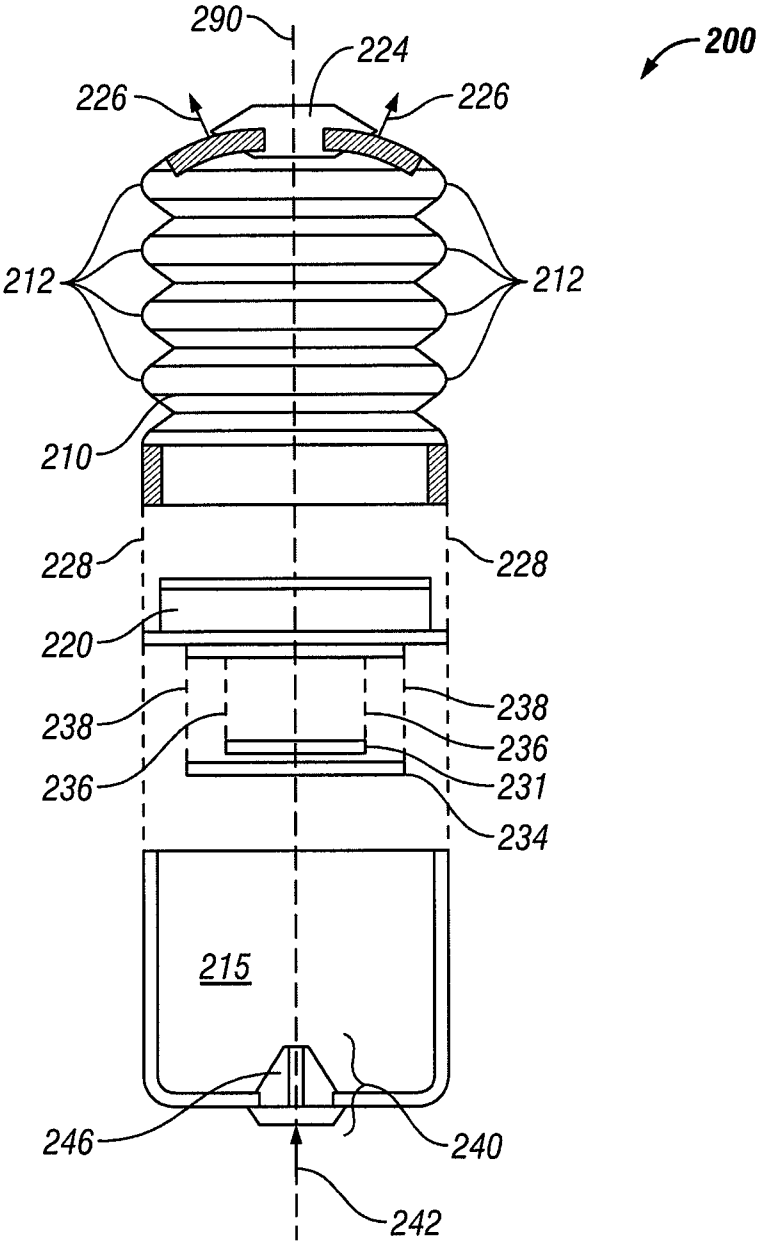
290
224
200
226
226
212
212
210
228
228
220
238
238
236
236
231
234
215
246
240
242

FIG. 2

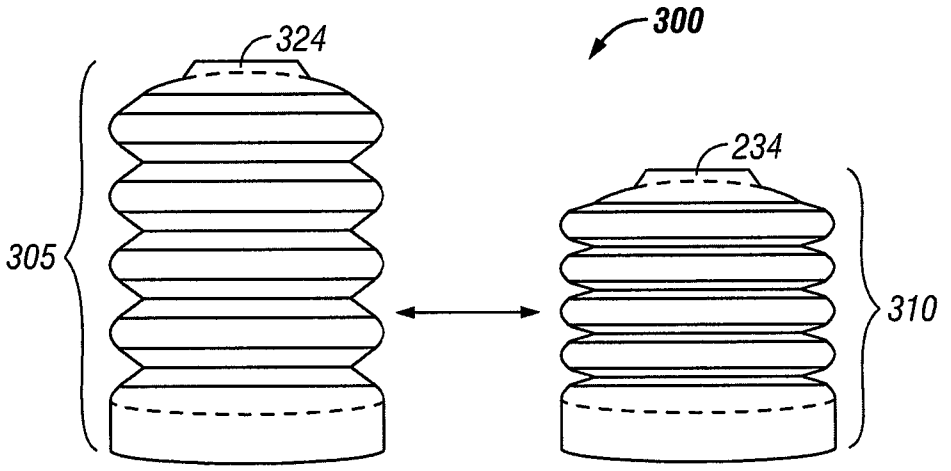

FIG. 3

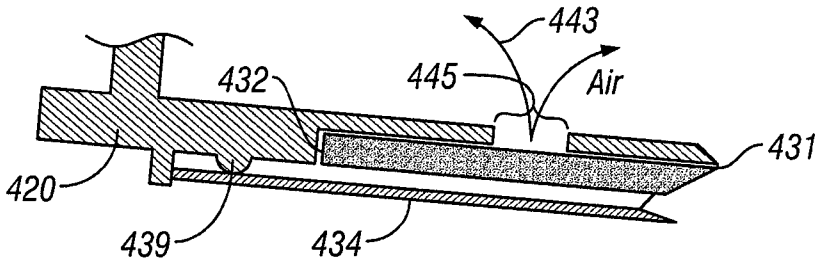

FIG. 4

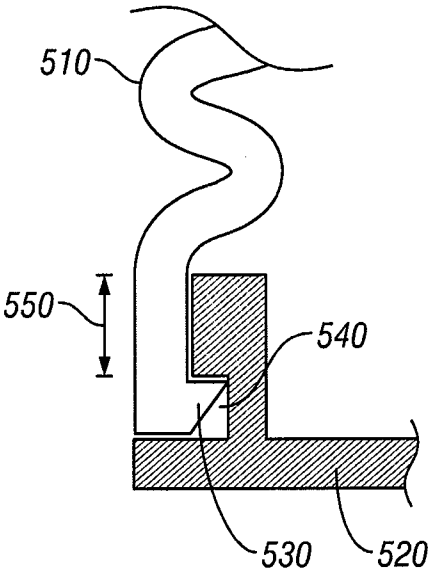

FIG. 5

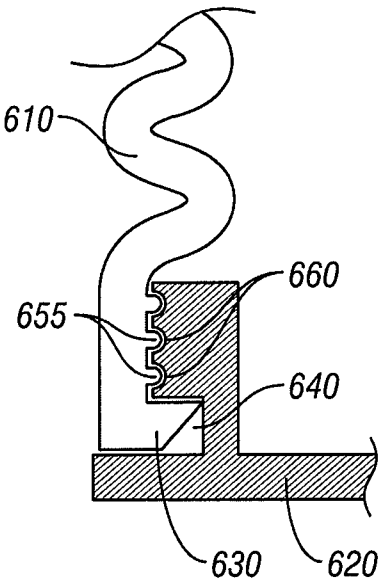

FIG. 6

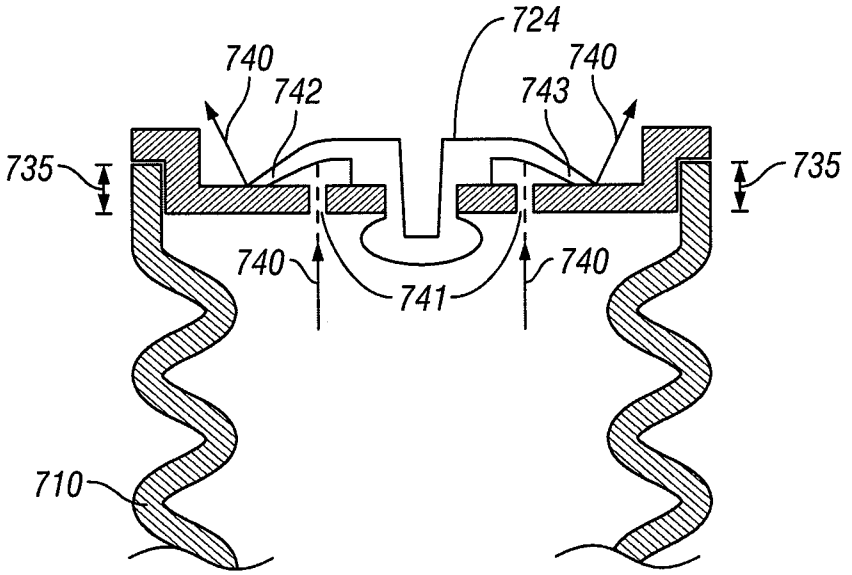

FIG. 7

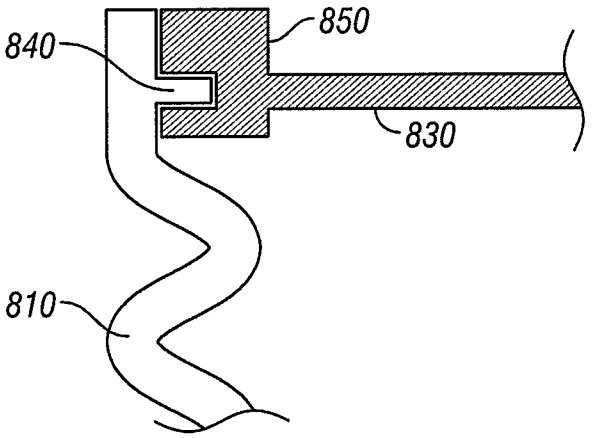

FIG. 8

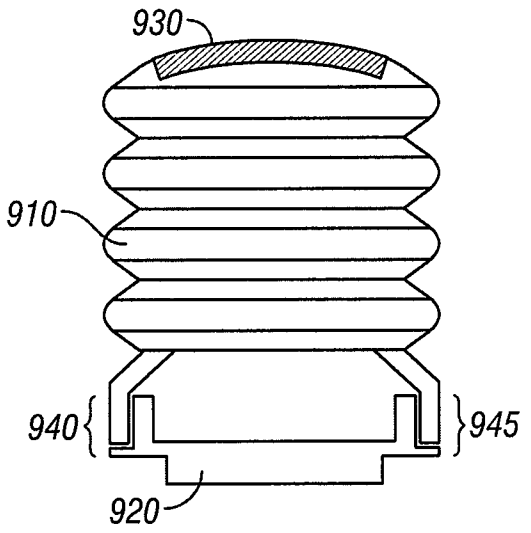
930
910
940
945
920

FIG. 9

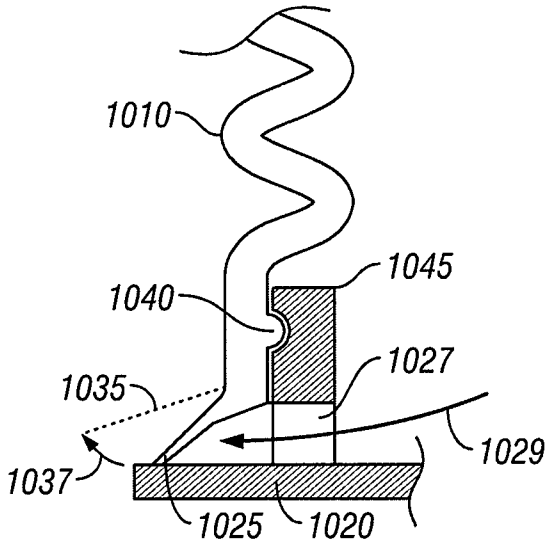
1010
1045
1040
1027
1035
1029
1037
1025
1020

FIG. 10

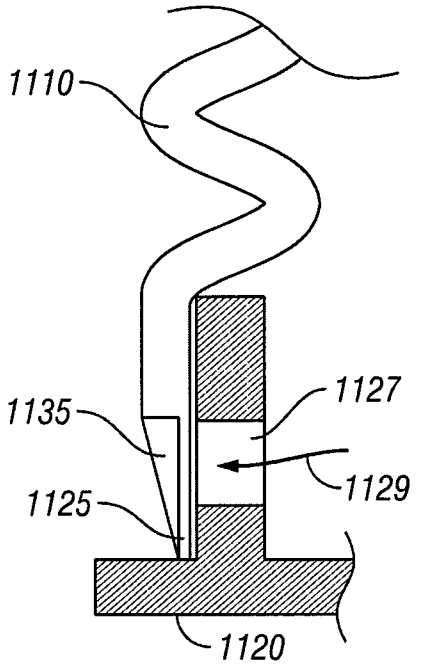

FIG. 11

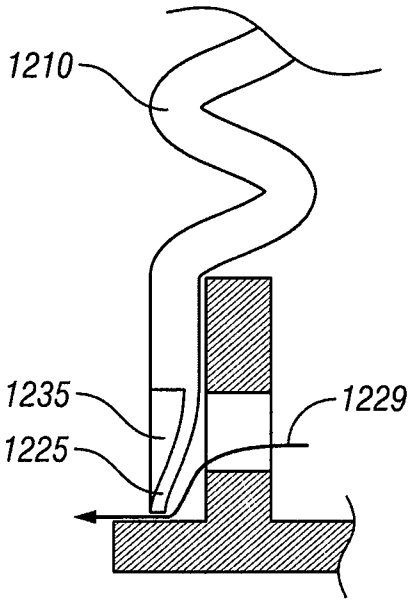

FIG. 12

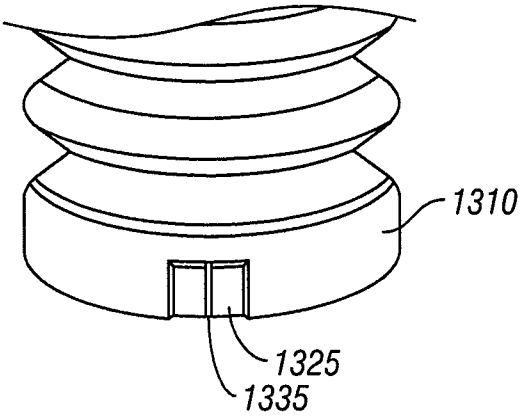
1310
1325
1335

FIG. 13

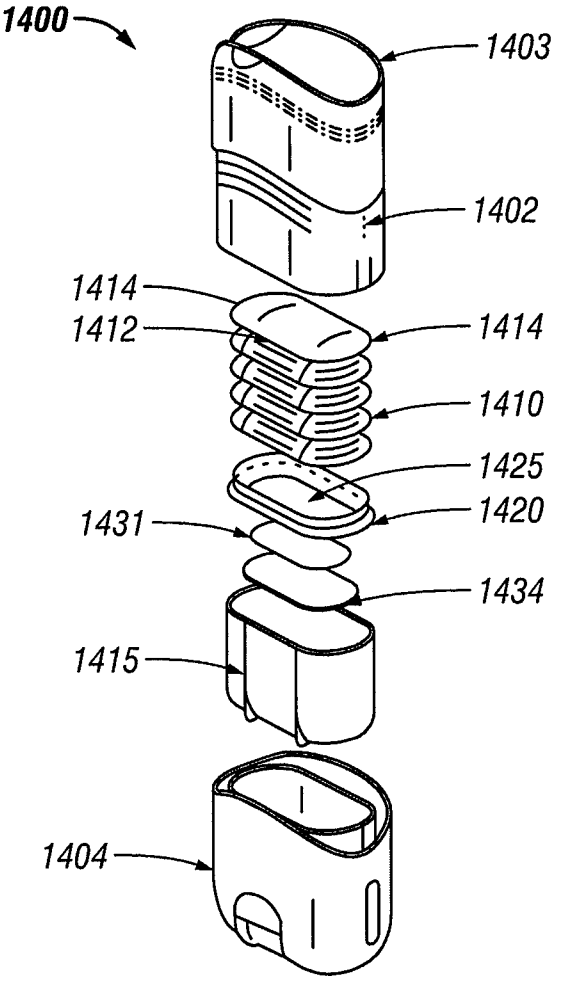
1400
1403
1402
1414
1412
1414
1410
1425
1420
1431
1434
1415
1404

FIG. 14

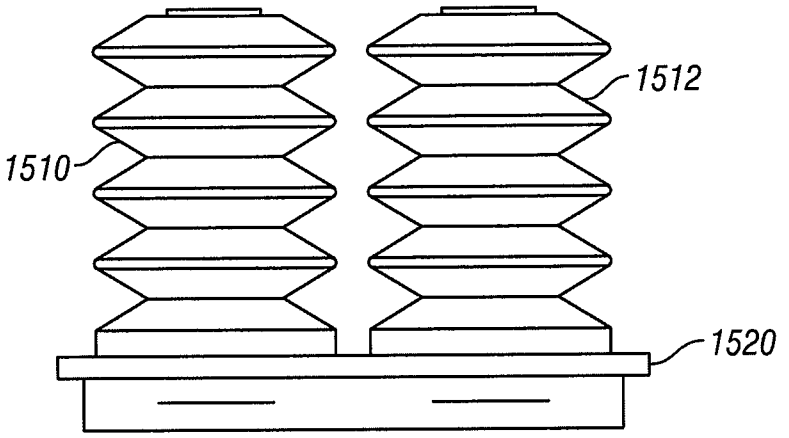

FIG. 15

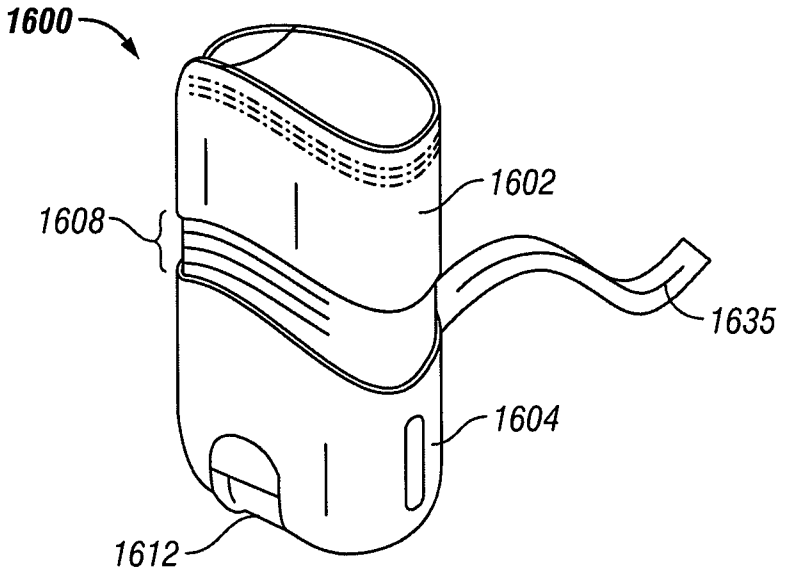

FIG. 16

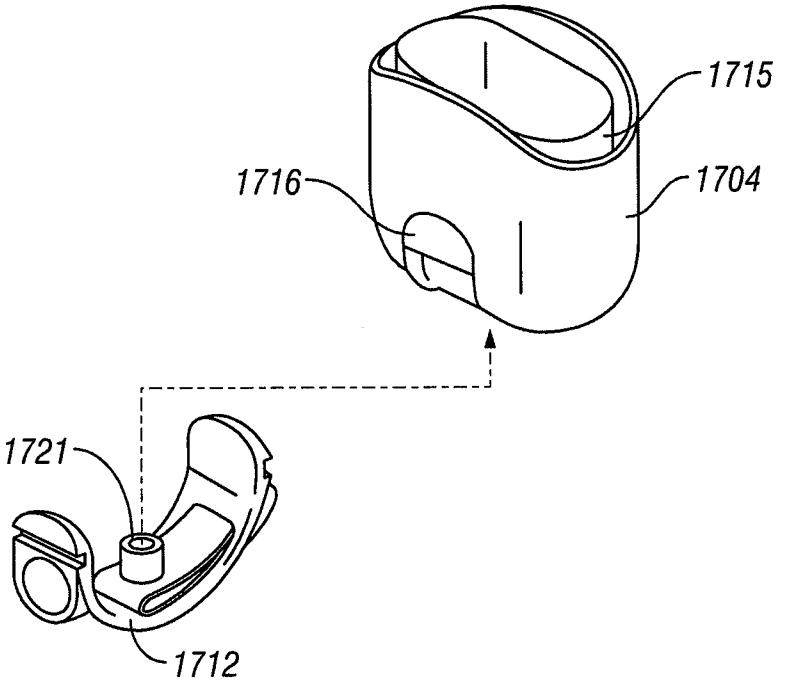

FIG. 17

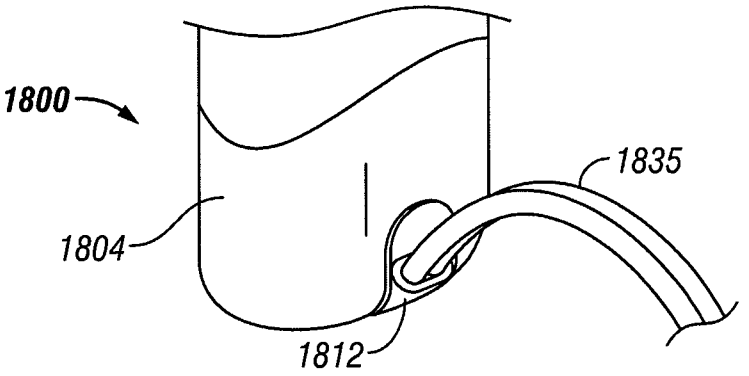

FIG. 18

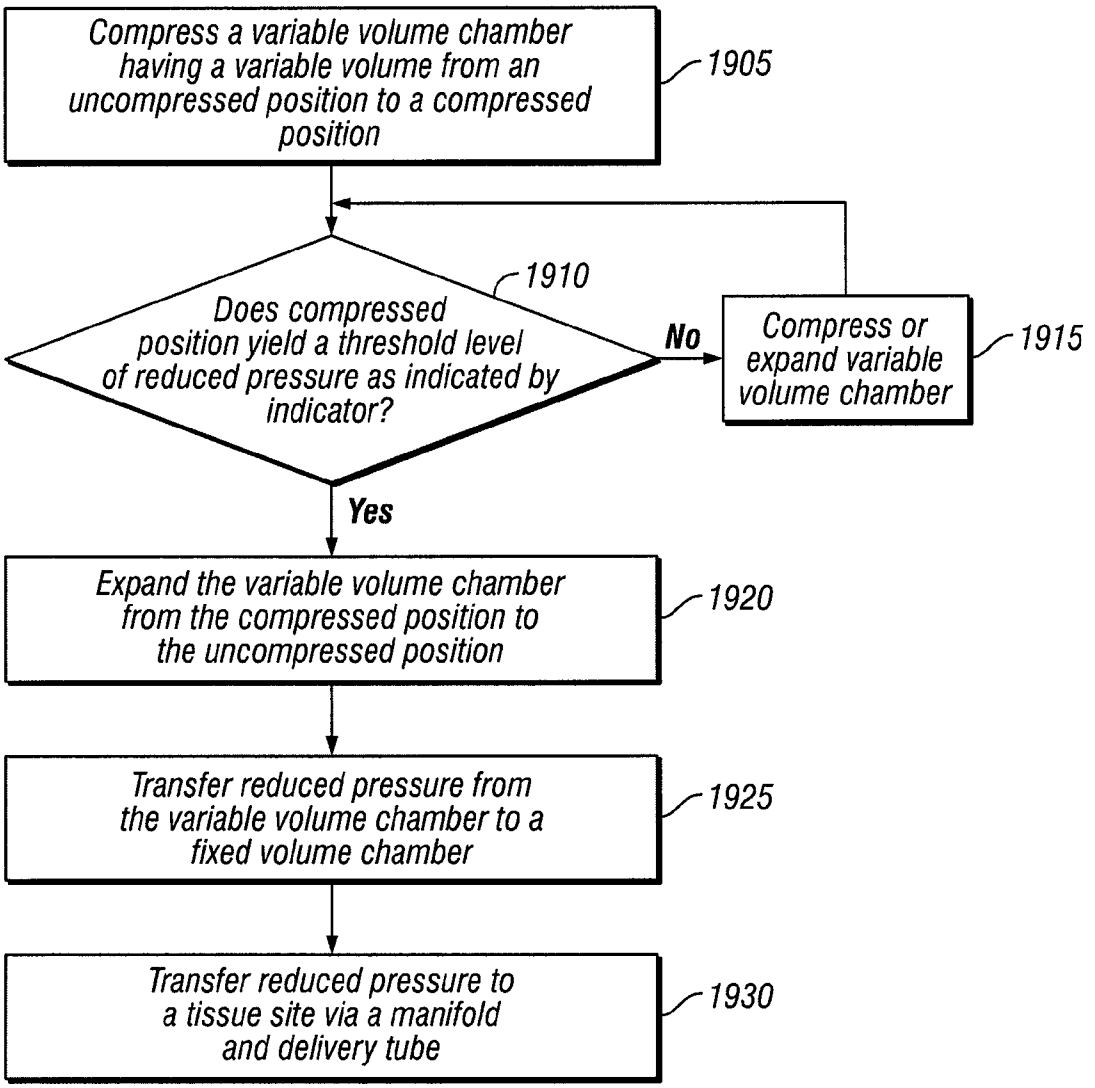
Compress a variable volume chamber having a variable volume from an uncompressed position to a compressed position
1905
Does compressed position yield a threshold level of reduced pressure as indicated by indicator?
1910
No
Compress or expand variable volume chamber
1915
Yes
Expand the variable volume chamber from the compressed position to the uncompressed position
1920
Transfer reduced pressure from the variable volume chamber to a fixed volume chamber
1925
Transfer reduced pressure to a tissue site via a manifold and delivery tube
1930

FIG. 19

SYSTEM AND METHOD FOR APPLYING REDUCED PRESSURE AT A TISSUE SITE

CROSS-REFERENCE TO RELATED APPLICATIONS

This application claims the benefit of the U.S. Provisional Application No. 60/900,555, filed Feb. 9, 2007, which is hereby incorporated by reference.

BACKGROUND OF THE INVENTION

1. Field of the Invention

The present invention relates generally to the field of tissue treatment, and more specifically to a system and method for applying reduced pressure at a tissue site.

2. Description of Related Art

Clinical studies and practice have shown that providing a reduced pressure in proximity to a tissue site augments and accelerates the growth of new tissue at the tissue site. The applications of this phenomenon are numerous, but application of reduced pressure has been particularly successful in treating wounds. The treatment of wounds using reduced pressure is sometimes referred to in the medical community as "negative pressure tissue treatment," "reduced pressure therapy," or "vacuum therapy." This type of treatment provides a number of benefits, including faster healing, and increased formulation of granulation tissue.

Reduced pressure treatment systems are often applied to large, highly exudating wounds present on patients undergoing acute or chronic care, as well as other severe wounds that are not readily susceptible to healing without application of reduced pressure. Low-severity wounds that are smaller in volume and produce less exudate have generally been treated using advanced dressings instead of reduced pressure treatment.

Currently, the use of reduced pressure treatment is not considered a viable or affordable option for low-severity wounds due to the manpower required to monitor and change system components, the requirement for trained medical personnel overseeing treatment, and the high cost of treatment. For example, the complexity of current reduced pressure treatment systems precludes a person with little or no specialized knowledge from administering such treatment to oneself or others. The size and power consumption characteristics of current reduced pressure treatment systems also limit the mobility of both the treatment system and the person to whom the treatment is being applied. Also, the high cost of current reduced pressure treatment systems can preclude the accessibility of such treatment systems to some users. Current reduced pressure treatment systems are also typically non-disposable after each treatment, and require electrical components or other powered devices in order to generate the reduced pressure used in treatment.

While reduced pressure could be applied to low-volume and low-exudating wounds using traditional reduced pressure treatment systems, a need exists for a more simple system that allows reduced pressure treatment to be administered without specialized medical training. A need further exists for a system that uses little power and is compact, allowing a user of the system to remain mobile and participate in normal day-to-day activities. Finally, a system is needed that is inexpensive so that the system can economically be used by a single patient and then disposed of following the end of treatment for that patient.

BRIEF SUMMARY OF THE INVENTION

To alleviate the existing problems with reduced pressure treatment systems, the illustrative embodiments described

herein are directed to a manually-actuated pump and method for applying reduced pressure at a tissue site. The manually-actuated pump includes at least one variable volume chamber that is manually compressible into a plurality of positions. The manually-actuated pump includes a fixed volume chamber in communication with the at least one variable volume chamber. The manually-actuated pump also includes a filter housing having a hydrophobic filter that prevents liquid from entering the at least one variable volume chamber. The fixed volume chamber is coupled to the at least one variable volume chamber via the filter housing. The filter housing is located in between the at least one variable volume chamber and the fixed volume chamber. The fixed volume chamber has reduced pressure that is applied to the tissue site in response to a movement of the at least one variable volume chamber from a compressed position in the plurality of positions to an uncompressed position in the plurality of positions.

The illustrative embodiments also provide a method for applying reduced pressure at a tissue site. The method compresses at least one variable volume chamber from an uncompressed position in a plurality of positions to a compressed position in the plurality of positions. The method, in response to expanding the at least one variable volume chamber from the compressed position to the uncompressed position, transfers reduced pressure from the at least one variable volume chamber to a fixed volume chamber via a filter housing having a hydrophobic filter that prevents liquid from entering the at least one variable volume chamber. The method applies the reduced pressure to the tissue site in response to transferring the reduced pressure from the at least one variable volume chamber to the fixed volume chamber. Other objects, features, and advantages of the invention will become apparent with reference to the drawings, detailed description, and claims that follow.

BRIEF DESCRIPTION OF THE DRAWINGS

FIG. **1** illustrates a block diagram of an apparatus for applying reduced pressure at a tissue site in accordance with an illustrative embodiment of the present invention;

FIG. **2** illustrates a perspective view of an apparatus for applying reduced pressure at a tissue site in accordance with an illustrative embodiment of the present invention;

FIG. **3** illustrates a perspective view of a compressible pump in an apparatus for applying reduced pressure at a tissue site in accordance with an illustrative embodiment of the present invention;

FIG. **4** illustrates a cross-sectional view of a filter housing in an apparatus for applying reduced pressure at a tissue site in accordance with an illustrative embodiment of the present invention;

FIG. **5** illustrates a cross-sectional view of an interlocking seal in an apparatus for applying reduced pressure at a tissue site in accordance with an illustrative embodiment of the present invention;

FIG. **6** illustrates a cross-sectional view of an interlocking seal in an apparatus for applying reduced pressure at a tissue site in accordance with an illustrative embodiment of the present invention;

FIG. **7** illustrates a cross-sectional view of an outlet valve in an apparatus for applying reduced pressure at a tissue site in accordance with an illustrative embodiment of the present invention;

FIG. **8** illustrates a cross-sectional view of a connection joint in an apparatus for applying reduced pressure at a tissue site in accordance with an illustrative embodiment of the present invention;

FIG. **9** illustrates a perspective view of outlet valves on a compressible pump in an apparatus for applying reduced pressure at a tissue site in accordance with an illustrative embodiment of the present invention;

FIG. **10** illustrates a cross-sectional view of an outlet valve in an apparatus for applying reduced pressure at a tissue site in accordance with an illustrative embodiment of the present invention;

FIG. **11** illustrates a cross-sectional view of an outlet valve in an apparatus for applying reduced pressure at a tissue site in accordance with an illustrative embodiment of the present invention;

FIG. **12** illustrates a cross-sectional view of an outlet valve in an apparatus for applying reduced pressure at a tissue site in accordance with an illustrative embodiment of the present invention;

FIG. **13** illustrates a perspective view of an outlet valve in an apparatus for applying reduced pressure at a tissue site in accordance with an illustrative embodiment of the present invention;

FIG. **14** illustrates a perspective view of an apparatus for applying reduced pressure at a tissue site in accordance with an illustrative embodiment of the present invention;

FIG. **15** illustrates a perspective view of two compressible pumps in an apparatus for applying reduced pressure at a tissue site in accordance with an illustrative embodiment of the present invention;

FIG. **16** illustrates a perspective view of an apparatus for applying reduced pressure at a tissue site in accordance with an illustrative embodiment of the present invention;

FIG. **17** illustrates a perspective view of a casing in an apparatus for applying reduced pressure at a tissue site in accordance with an illustrative embodiment of the present invention;

FIG. **18** illustrates a perspective view of a casing in an apparatus for applying reduced pressure at a tissue site in accordance with an illustrative embodiment of the present invention;

FIG. **19** illustrates a flowchart illustrating a process for applying reduced pressure at a tissue site in accordance with an illustrative embodiment of the present invention.

DETAILED DESCRIPTION OF THE ILLUSTRATIVE EMBODIMENTS

In the following detailed description of the illustrative embodiments, reference is made to the accompanying drawings that form a part hereof. These embodiments are described in sufficient detail to enable those skilled in the art to practice the invention, and it is understood that other embodiments may be utilized and that logical structural, mechanical, electrical, and chemical changes may be made without departing from the spirit or scope of the invention. To avoid detail not necessary to enable those skilled in the art to practice the embodiments described herein, the description may omit certain information known to those skilled in the art. The following detailed description is, therefore, not to be taken in a limiting sense, and the scope of the present invention is defined only by the appended claims.

The illustrative embodiments described herein provide an apparatus and method for applying reduced pressure at a tissue site. Reduced pressure generally refers to a pressure less than the ambient pressure at a tissue site that is being subjected to treatment. In most cases, this reduced pressure will be less than the atmospheric pressure of the location at which the patient is located. Although the terms "vacuum" and "negative pressure" may be used to describe the pressure applied to the tissue site, the actual pressure applied to the tissue site may be significantly less than the pressure normally associated with a complete vacuum. Consistent with this nomenclature, an increase in reduced pressure or vacuum pressure refers to a relative reduction of absolute pressure, while a decrease in reduced pressure or vacuum pressure refers to a relative increase of absolute pressure.

The manually-actuated pump includes at least one variable volume chamber that is manually compressible into a plurality of positions. The manually-actuated pump includes a fixed volume chamber in communication with the at least one variable volume chamber. The manually-actuated pump also includes a filter housing having a hydrophobic filter that prevents liquid from entering the at least one variable volume chamber. The fixed volume chamber is coupled to the at least one variable volume chamber via the filter housing. As used herein, the term "coupled" includes coupling via a separate object. For example, the fixed volume chamber may be coupled to the at least one variable volume chamber if both the fixed volume chamber and the at least one variable volume chamber are coupled to a third object, such as a filter housing. The term "coupled" also includes "directly coupled," in which case the two objects touch each other in some way. The term "coupled" also encompasses two or more components that are continuous with one another by virtue of each of the components being formed from the same piece of material.

The filter housing is located in between the at least one variable volume chamber and the fixed volume chamber. The fixed volume chamber has reduced pressure that is applied to the tissue site in response to a movement of the at least one variable volume chamber from a compressed position in the plurality of positions to an uncompressed position in the plurality of positions.

Turning now to FIG. **1**, reduced pressure treatment system **100**, which applies reduced pressure to a tissue site **105**, is shown according to an illustrative embodiment. Tissue site **105** may be the bodily tissue of any human, animal, or other organism, including bone tissue, adipose tissue, muscle tissue, dermal tissue, vascular tissue, connective tissue, cartilage, tendons, ligaments, or any other tissue. While tissue site **105** may include a wound, diseased tissue, or defective tissue, the tissue site may also be healthy tissue that is not wounded, diseased, or defective. The application of reduced pressure to tissue site **105** may be used to promote the drainage of exudate and other liquids from tissue site **105**, as well as stimulate the growth of additional tissue. In the case in which tissue site **100** is a wound site, the growth of granulation tissue and removal of exudates and bacteria promotes healing of the wound. The application of reduced pressure to non-wounded or non-defective tissue, including healthy tissue, may be used to promote the growth of tissue that may be harvested and transplanted to another tissue location.

Reduced pressure treatment system **100** includes pump **102**. Pump **102** includes a variable volume chamber **110** and fixed volume chamber **115**, which are coupled to one another via filter housing **120**. Variable volume chamber **110** has a variable volume that is affected by the compression of compressible pump along axis **122**. Variable volume chamber **110** may also be compressed along other axes.

Variable volume chamber **110** may be manually-actuated. That is, the compression of variable volume chamber **110** may be performed by any living organism. For example, variable volume chamber **110** may be manually pushed, squeezed, or otherwise compressed by a human hand, finger, or other limb. Variable volume chamber **110** may be any type

of manually-actuated chamber. For example, variable volume chamber **110** may be a compressible bellows have corrugated side walls.

In one embodiment, variable volume chamber **110** is compressible into a plurality of positions, each of which may define a different volume for variable volume chamber **110**. For example, variable volume chamber **110** may have a fully uncompressed position at which variable volume chamber **110** has the greatest volume. In this example, variable volume chamber **110** may also have a fully compressed position at which variable volume chamber **110** has the smallest volume. Variable volume chamber **110** may also have any position between the fully uncompressed position and the fully compressed position. Thus, the uncompressed and compressed positions may be any positions at or between the fully uncompressed position and the fully compressed position in which the uncompressed position has a greater volume than the compressed position.

Variable volume chamber **110** includes outlet valve **124**. Outlet valve **124** permits the passage of gas, such as air, out of variable volume chamber **110**. Outlet valve **124** also prevents gas from entering variable volume chamber **110**. This, when the volume of variable volume chamber **110** is reduced due to the compression of compressible pump from an uncompressed position to a compressed position, gas is forced out of variable volume chamber **110**. Outlet valve **124** may be any type of valve capable of permitting the passage of gas out of variable volume chamber **110** while preventing the passage of gas into variable volume chamber **110**. A non-limiting example of valve **124** is an umbrella valve, duckbill valve, ball valve, diaphragm valve, and any type of one-way valve.

Although FIG. **1** shows variable volume chamber **110** as having a single outlet valve **124**, variable volume chamber **110** may have any number of outlet valves. Also, although FIG. **1** shows outlet valve **124** at the end portion of variable volume chamber **110**, outlet valve **124** may be located on any portion of variable volume chamber **110**, such as the side walls of variable volume chamber **110**. In one embodiment, outlet valve **124** is located at an end of variable volume chamber **110** that is opposite of the end at which filter housing **120** is located. Additional details regarding outlet valve **124** will be provided in FIGS. **2**, **7**, and **9-13** below.

Pump **102** also includes fixed volume chamber **115**. Fixed volume chamber **115** is capable of containing any fluid, such as gases and liquids, as well as fluids that contain solids. For example, fixed volume chamber **115** may contain exudates from tissue site **105**. In one example, fixed volume chamber **115** has a substantially fixed volume. Fixed volume chamber **115** may be made of any material capable of providing fixed volume chamber **115** with a substantially fixed volume, including metal, plastic, or hardened rubber.

Fixed volume chamber **115** includes side walls **125** and **127**, which are coupled to end wall **130**. Side walls **125** and **127** may be contiguously formed with an end wall **130** such that no joint exists between side walls **125** and **127** and end wall **130**. In addition, side walls **125** and **127** may be welded, screwed, glued, bolted, air-lock sealed, or snapped onto end wall **130**.

Fixed volume chamber **115** is coupled to variable volume chamber **110** by filter housing **120**. Fixed volume chamber **115** and variable volume chamber **110** may be coupled to filter housing **120** in a variety of ways. For example, fixed volume chamber **115** or variable volume chamber **110** may be welded, screwed, glued, bolted, air-lock sealed, or snapped onto filter housing **120**. Fixed volume chamber **115** or variable volume chamber **110** may also be part of the same material as filter housing **120**, thereby eliminating the need for joints or seals between fixed volume chamber **115** and filter housing **120**. In another example, variable volume chamber **110** may be sealed to filter housing **120** using an interlocking seal. Additional details regarding the coupling of filter housing **120** with fixed volume chamber **115** or variable volume chamber **110** are described below in FIGS. **2**, **5**, **6**, **10-13**, and **14**.

Filter housing **120** is capable of including one or more filters. In one embodiment, filter housing **120** includes a hydrophobic filter that prevents liquid from entering variable volume chamber **110** from fixed volume chamber **115**. However, as described below, the hydrophobic filter permits the passage of air such that reduced pressure may be transferred from variable volume chamber **110** to fixed volume chamber **115**. Filter housing **120** may also include an odor filter that restrains or prevents the transmission of odor from fixed volume chamber **115** to variable volume chamber **110**. Additional details regarding the hydrophobic filter and odor filter will be provided in FIGS. **2**, **4**, and **14** below.

Fixed volume chamber **115** is coupled to delivery tube **130** via inlet valve **140**. Inlet valve **140** is located at inlet point **143**. Inlet valve **140** permits the passage of fluid, such as exudate, into fixed volume chamber **115** at inlet point **143**. Inlet valve **140** also restrains the passage of fluid out of fixed volume chamber **115** at inlet point **143**. Inlet valve **140** may be any type of valve, such as an umbrella valve, duck bill valve, or a combination thereof.

Inlet valve **124** may be located at the center of end wall **130**. Although FIG. **1** shows fixed volume chamber **115** as having a single inlet valve **140**, fixed volume chamber **115** may have any number of inlet valves. Also, although FIG. **1** shows inlet valve **140** at end wall **130** of fixed volume chamber **115**, outlet valve **140** may be located on any portion of fixed volume chamber **115**, such as side walls **125** and **127** of fixed volume chamber **115**. Additional details regarding inlet valve **140** will be provided in FIGS. **2** and **17** below.

Delivery tube **140** is any tube through which a fluid may flow. Delivery tube **135** may be made from any material, and may include one or more paths or lumens through which fluid may flow. For example, delivery tube **135** may include two lumens. In this example, one lumen may be used for the passage of exudate from tissue site **105** to fixed volume chamber **115**. The other lumen may be used to deliver fluids, such as air, antibacterial agents, antiviral agents, cell-growth promotion agents, irrigation fluids, or other chemically active agents, to tissue site **105**. The fluid source from which these deliverable fluids originate is not shown in FIG. **1**.

Delivery tube **135** may be fixedly attached to fixed volume chamber **115** at inlet point **143**. Also, delivery tube **135** may be detachable from fixed volume chamber **115** at inlet point **143**. For example, delivery tube **135** may be snapped onto fixed volume chamber **115**. Additional details regarding the coupling the delivery tube **135** to fixed volume chamber **115** will be provided in FIGS. **2** and **16-18** below.

The opposite end of delivery tube **135** is coupled to a manifold **145**. Manifold **145** may be a biocompatible, porous material that is capable of being placed in contact with tissue site **105** and distributing reduced pressure to the tissue site **105**. Manifold **145** may be made from foam, gauze, felted mat, or any other material suited to a particular biological application. Manifold **145** may include a plurality of flow channels or pathways to facilitate distribution of reduced pressure or fluids to or from the tissue site.

In one embodiment, manifold **145** is a porous foam and includes a plurality of interconnected cells or pores that act as flow channels. The porous foam may be a polyurethane, open-cell, reticulated foam such as GranuFoam manufac-

tured by Kinetic Concepts, Inc. of San Antonio, Tex. If an open-cell foam is used, the porosity may vary, but is preferably about 400 to 600 microns. The flow channels allow fluid communication throughout the portion of manifold **145** having open cells. The cells and flow channels may be uniform in shape and size, or may include patterned or random variations in shape and size. Variations in shape and size of the cells of manifold result in variations in the flow channels, and such characteristics may be used to alter the flow characteristics of fluid through manifold **145**.

In one embodiment, manifold **145** may further include portions that include "closed cells." These closed-cell portions of manifold **145** contain a plurality of cells, the majority of which are not fluidly connected to adjacent cells. Closed-cell portions may be selectively disposed in manifold **145** to prevent transmission of fluids through perimeter surfaces of manifold **145**.

Manifold **145** may also be constructed from bioresorbable materials that do not have to be removed from a patient's body following use of reduced pressure treatment system **100**. Suitable bioresorbable materials may include, without limitation, a polymeric blend of polylactic acid (PLA) and polyglycolic acid (PGA). The polymeric blend may also include without limitation polycarbonates, polyfumarates, and capralactones. Manifold **145** may further serve as a scaffold for new cell-growth, or a scaffold material may be used in conjunction with manifold **145** to promote cell-growth. A scaffold is a substance or structure used to enhance or promote the growth of cells or formation of tissue, such as a three-dimensional porous structure that provides a template for cell growth. Illustrative examples of scaffold materials include calcium phosphate, collagen, PLA/PGA, coral hydroxy apatites, carbonates, or processed allograft materials. In one example, the scaffold material has a high void-fraction (i.e. a high content of air).

Manifold **145** may be secured to tissue site **105** using sealing member **150**. Sealing member **150** may be a cover that is used to secure manifold **145** at tissue site **105**. While sealing member **150** may be impermeable or semi-permeable, in one example sealing member **150** is capable of maintaining a reduced pressure at tissue site **105** after installation of the sealing member **150** over manifold **145**. Sealing member **150** may be a flexible drape or film made from a silicone based compound, acrylic, hydrogel or hydrogel-forming material, or any other biocompatible material that includes the impermeability or permeability characteristics desired for tissue site **105**.

In one embodiment, sealing member **150** is configured to provide a sealed connection with the tissue surrounding manifold **145** and tissue site **105**. The sealed connection may be provided by an adhesive positioned along a perimeter of sealing member **150** or on any portion of sealing member **150** to secure sealing member **150** to manifold **145** or the tissue surrounding tissue site **105**. The adhesive may be pre-positioned on sealing member **150** or may be sprayed or otherwise applied to sealing member **150** immediately prior to installing sealing member **150**.

In some cases, sealing member **150** may not be required to seal tissue site **105**. For example, tissue site **105** may be capable of being "self-sealed" to maintain reduced pressure. In the case of subcutaneous and deep tissue wounds, cavities, and fistulas, maintenance of reduced pressure at tissue site **105** may be possible without the use of sealing member **150**. Since tissue often encases or surrounds these types of tissue sites, the tissue surrounding the tissue site acts effectively as a sealing member.

In one embodiment, delivery tube **135** is coupled to manifold **145** via connection member **155**. Connection member **155** permits the passage of fluid from manifold **145** to delivery tube **135**, and vice versa. For example, exudates collected from tissue site **105** using manifold **145** may enter delivery tube **135** via connection member **155**. In another embodiment, reduced pressure treatment system **100** does not include connection member **155**. In this embodiment, delivery tube **135** may be inserted directly into sealing member **150** such that an end of delivery tube **135** is adjacent to manifold **145**.

Reduced pressure treatment system **100** may also include pressure feedback system **160**. Pressure feedback system **160** may be operably associated with the other components of reduced pressure treatment system **100** to provide information to a user of reduced pressure treatment system **100** that indicates a relative or absolute amount of pressure that is being delivered to tissue site **105**. Pressure feedback system **160** allows a user to accurately track the amount of reduced pressure that is being generated by reduced pressure treatment system **100**. Non-limiting examples of pressure feedback systems include pop valves that activate when the reduced pressure rises above a selected value, low power electronic indicators powered by miniature cells, dial indicators that indicate specific pressure values that are being applied to the tissue site, deflection pop valves, polymers with various deflection characteristics, and films that move relative to one another to produce visual identifiers indicating the relative or absolute pressure values being generated by reduced pressure treatment system **100**. An example of a film-based system may include a yellow film anchored to a first part of pump **102** that is capable of movement relative to a blue film anchored to a second part. When the first and second parts are moved relative to one another to apply a reduced pressure, the yellow and blue films overlap to create a green indicator. As the pressure increases and the films move away from one another, the loss of the green color indicates that the pressure has increased (i.e. more reduced pressure needs to be applied).

Also, although pressure feedback system **160** is shown as separate from the other components of reduced pressure treatment system **100**, pressure feedback system **160** may form an integral part of any of the components of reduced pressure treatment system **100**. Additional details regarding pressure feedback system **160** will be described in FIGS. **14** and **16** below. In addition to the above-mentioned components and systems, reduced pressure treatment system **100** may include valves, regulators, switches, and other electrical, mechanical, and fluid components to facilitate administration of reduced pressure treatment to tissue site **105**.

A desiccant or absorptive material may be disposed within fixed volume chamber **115** to trap or control fluid once the fluid has been collected. In the absence of fixed volume chamber **115**, a method for controlling exudate and other fluids may be employed in which the fluids, especially those that are water soluble, are allowed to evaporate from manifold **145**.

In one embodiment, variable volume chamber **110** is moved from an uncompressed position to a compressed position, thereby decreasing the volume of variable volume chamber **110**. As a result, gas is expelled from variable volume chamber **110** through outlet valve **124**. Because gas cannot enter variable volume chamber **110** via outlet valve **124**, gas cannot enter variable volume chamber **110** from surrounding space **165**. Thus, as variable volume chamber **110** expands from the compressed position to the uncompressed position, gas is transferred from fixed volume chamber **115** to variable volume chamber **110**. The movement of variable volume

chamber **110** from a compressed position to an uncompressed position may be caused by any expansion force. In an illustrative example in which the side walls of variable volume chamber **110** are corrugated side walls, the expansion force may be caused by the tendency of the corrugations in the corrugated side walls to move away from one another and thereby return variable volume chamber **110** to the uncompressed position. The expansion force may also be caused by an independent biasing member, such as a spring or foam component, that is located within or without variable volume chamber **110**. In another example, the resiliency of non-corrugated side walls of variable volume chamber **110** may be used to move variable volume chamber **110** to an uncompressed position.

Liquid, such as exudate, is prevented from being transferred from fixed volume chamber **115** to variable volume chamber **110** by a filter, such as a hydrophobic filter, in filter housing **120**. Because fixed volume chamber **115** is sealed from surrounding space **165**, a reduced pressure is generated in fixed volume chamber **115** as variable volume chamber **110** expands from the compressed position to the uncompressed position. This reduced pressure is than transferred to tissue site **105** via delivery tube **135** and manifold **145**. This reduced pressure may be maintained at tissue site **105** using sealing member **150**.

This process of moving variable volume chamber **110** from an uncompressed to a compressed position, and vice versa, in order to achieve a reduced pressure at tissue site **105** may be repeated. In particular, variable volume chamber **110** may undergo multiple compression/expansion cycles until fixed volume chamber **115** is filled with liquid, such as exudate, from tissue site **105**. The multi-chamber configuration of pump **102**, which includes variable volume chamber **110** and fixed volume chamber **115**, permits compressible pump to be compressed regardless of the amount of liquid in fixed volume chamber **115**. As a result, the desired pressure may be achieved during the compression/expansion cycles regardless of the amount of liquid in fixed volume chamber **115**.

Turning now to FIG. **2**, pump **200**, which is a non-limiting example of pump **102** in FIG. **1**, is shown in accordance with an illustrative embodiment. Pump **200** may be used as a substitute for pump **102** in FIG. **1**.

Pump **200** includes compressible bellows **210**. Compressible bellows **210** is a non-limiting example of variable volume chamber **110** in FIG. **1**. Compressible bellows **210** may be moved into a plurality of positions, such as an uncompressed position and a compressed position. Compressible bellows **210** is formed from corrugated side walls with corrugations **212**. Corrugations **212** may move toward and away from one another, resulting in a compression and expansion of compressible bellows **210**. For example, compressible bellows **210** may move from a compressed position to an uncompressed position due to the expansion force provided by a decrease in the linear density of corrugations **212**. This expansion force may be provided by the tendency of corrugations **212** to move away from one another.

In addition, compressible bellows **210** may be composed of any material that allows the compression and expansion of compressible bellows **210**. The expansion force provided by the corrugated side walls may depend on the material from which compressible bellows **210** is composed. Thus, the amount of pressure provided by compressible bellows **210** to a tissue site, such as tissue site **105** in FIG. **1**, may also depend on the material from which compressible bellows **210** is composed. Factors that may affect the amount of pressure provided by compressible bellows **210** include material hardness, elasticity, thickness, resiliency, and permeability. A material may also be selected based on the degree of pressure decay experienced by pump **200** as compressible bellows **210** moves from a compressed position to an uncompressed position. The expansion force provided by the corrugated side walls may also depend on the design of compressible bellows **210**. The variance in cross-section of compressible bellows **210** affects the amount of obtainable reduced pressure as well as the input input pressure required to initiate compressible bellows **210**.

In one non-limiting example, compressible bellows **210** is composed of Shore 65A. Shore 65 A may be capable of providing between 125 and 150 mm Hg of pressure. These levels of pressure may also be capable of being maintained for at least six hours. For higher pressures, harder materials, such as Shore 85 A, may be used. By varying the material from which compressible bellows **210** is composed, pressures of 250 mm Hg, as well as pressures above 400 mm Hg, may by achieved using compressible bellows **210**.

Although compressible bellows **210** is shown to have a circular cross sectional shape, compressible bellows **210** may have any cross sectional shape. For example, the cross sectional shape of compressible bellows **210** may be an oval or polygon, such as a pentagon, hexagon, or octagon.

Compressible bellows **210** includes outlet valve **224**. Outlet valve **224** is a non-limiting example of outlet valve **124** in FIG. **1**. Gas exits compressible bellows **210** via outlet valve **224** in response to a movement of bellow pump **210** from an uncompressed position to a compressed position. Outlet valve **224** may be located anywhere on compressible bellows **210**. For example, outlet valve **224** may be located on an end of compressible bellows **210** that is opposite of the end at which filter housing **220** is located. Outlet valve **224** may also be centrally disposed on an end wall of compressible bellows **210**. The directional flow of the gas from compressible bellows **210** is indicated by arrows **226**. Outlet valve **224** prevents gas from entering compressible bellows **210**. In FIG. **2**, outlet valve **224** is an umbrella valve, although valve **224** may be any type of valve. Additional details regarding outlet valve **224** are described in FIG. **7** below.

As indicated by dotted lines **228**, compressible bellows **210** is coupled to filter housing **220**. Compressible bellows **210** may be welded, screwed, glued, bolted, air-lock sealed, or snapped onto filter housing **220**. Additional details regarding the coupling between compressible bellows **210** and filter housing **220** are described in FIGS. **5** and **6** below.

Filter housing **220** is a non-limiting example of filter housing **120** in FIG. **1**. Filter housing may be composed of any material, such as plastic, metal, rubber, or any other material capable of holding one or more filters. Filter housing **220** contains odor filter **231**, which is attached to filter housing **220** as indicated by dotted lines **236**. Odor filter **231** may be screwed, glued, bolted, air-lock sealed, snapped onto, or otherwise placed adjacent to filter housing **220**. Also, filter housing **220** may include a groove into which odor filter **231** is placed.

Odor filter **231** restrains or prevents the transmission of odor from fixed volume chamber **215** to compressible bellows **210**. Such odor may be the result of exudate or other liquid contained in fixed volume chamber **215**. In one embodiment, odor filter **231** is a carbon odor filter. In this embodiment, the carbon odor filter may include charcoal. Although FIG. **2** depicts odor filter **231** as a having a flattened shape, odor filter **231** may have any shape capable of restraining or preventing the transmission of odor from fixed volume chamber **215** to compressible bellows **210**. For example, odor filter **231** may have circular, ovular, or polygonal disk shape.

Filter housing **220** also includes hydrophobic filter **234**, which is attached to filter housing **220** as indicated by dotted lines **238**. Hydrophobic filter **234** may be screwed, glued, bolted, air-lock sealed, snapped onto, ultrasonically welded, or otherwise placed adjacent to filter housing **220**. In one example, odor filter **231** is sandwiched between filter housing **220** and hydrophobic filter **234**. In the example in which hydrophobic filter **234** is secured to filter housing **220**, odor filter **231** may be secured as a result of being sandwiched between filter housing **220** and hydrophobic filter **234**. Odor filter **231** and hydrophobic filter **234** may be coupled to a side of filter housing **220** that is nearer to fixed volume chamber **215**, as shown in FIG. **2**.

Hydrophobic filter **234** prevents liquid, such as exudate, from entering compressible bellows **210**. However, hydrophobic filter **234** allows the passage of gas, such as air, such that reduced pressure may be transferred from compressible bellows **210** and fixed volume chamber **215**. Hydrophobic filter **234** may be composed from any of a variety of materials, such as expanded polytetrafluoroethene.

Pump **200** includes fixed volume chamber **215**. Fixed volume chamber **215** is a non-limiting example of fixed volume chamber **115** in FIG. **1**. Fixed volume chamber **215** has a fixed volume and may contain any liquid, such as exudate from a tissue site, such as tissue site **105** in FIG. **1**. Fixed volume chamber **215** may be welded, screwed, glued, bolted, air-lock sealed, or snapped onto filter housing **220**.

Fixed volume chamber **215** includes inlet valve **240**. Inlet valve **240** is a non-limiting example of inlet valve **140** in FIG. **1**. As shown in FIG. **2**, inlet valve **240** is centrally located at an end wall of fixed volume chamber **215**. Also, inlet valve **240** and outlet valve **224** are each located along central longitudinal axis **290**, which traverses the center of pump **200**.

Any liquid, such as exudate, may flow from a manifold, such as manifold **145** in FIG. **1**, into fixed volume chamber **215** via inlet valve **240**. The flow of liquid into fixed volume chamber **215** via inlet valve **240** is indicated by arrow **242**. Inlet valve **240** also restrains or prevents the passage of liquid out of fixed volume chamber **215** at the point at which inlet valve **240** is located.

Any of a variety of valves may be used to achieve the functionality of inlet valve **240**. In one embodiment, top portion **246** of inlet valve **240** is a duck bill valve. Inlet valve **240** may also be an umbrella valve, duckbill valve, ball valve, diaphragm valve, and any type of one-way valve.

Liquid flow into fixed volume chamber **215** is caused by the reduced pressure in fixed volume chamber **215**. The reduced pressure in fixed volume chamber **215** is caused by the reduced pressure transferred from compressible bellows **210** to fixed volume chamber **215**. As compressible bellows **210** is moved from a compressed position to an uncompressed position, gas is transferred from fixed volume chamber **215** to compressible bellows **210**. As a result, reduced pressure is transferred to fixed volume chamber **215** from compressible bellows **210** in response to a movement of compressible bellows **210** from a compressed position to an uncompressed position. As compressible bellows **210** is moved from an uncompressed position to a compressed position, gas moves out of compressible bellows **210** via outlet valve **224**. Such compression/expansion cycles may be repeated to apply a desired amount of reduced pressure to a tissue site, such as tissue site **105** in FIG. **1**.

Turning now to FIG. **3**, bellows pump **300**, which is a non-limiting example of bellows pump **200** in FIG. **2**, is shown in accordance with an illustrative embodiment. In FIG. **3**, compressible bellows **300** is shown in two different positions in the range of positions that may be achieved by compressible bellows **300**. In particular, compressible bellows **300** is shown in uncompressed position **305** and compressed position **310**. Compressible bellows **300** has a greater volume in uncompressed position **305** than in compressed position **310**.

As compressible bellows **300** is compressed from uncompressed position **305** to compressed position **310**, the gas in compressible bellows **300** is expelled through outlet valve **324**, which is a non-limiting example of outlet valve **224** in FIG. **2**. The volume of compressible bellows **300** decreases during transition **315**.

As compressible bellows **300** expands from compressed position **310** to uncompressed position **305**, gas does not enter compressible bellows **300** via outlet valve **324** because outlet valve **324** allows air only to exit compressible bellows **300**. Instead, gas enters bellows pump from a fixed volume chamber, such as fixed volume chamber **215** in FIG. **2**, to which compressible bellows **300** is coupled. The volume of compressible bellows **300** increases as compressible bellows **300** expands from compressed position **310** to uncompressed position **305**.

The expansion force necessary to expand compressible bellows **300** is provided by an expansion or biasing force. The material from which compressible bellows **300** is composed is elastically deformed when compressible bellows **300** is in compressed position **310**. Elastic properties of the material from which compressible bellows **300** is composed biases the corrugations included on compressible bellows **300** to move away from one another such that compressible bellows **300** expands to uncompressed position **305**. As compressible bellows **300** expands, the sealed nature of the variable volume chamber results in a reduced pressure being created within the variable volume chamber. The reduced pressure may then be transmitted through a hydrophobic filter to a fixed volume chamber, which, in turn, transmits the reduced pressure to a tissue site.

Turning now to FIG. **4**, a portion of filter housing **420**, which is a non-limiting example of filter housing **220** in FIG. **2**, is shown in accordance with an illustrative embodiment. Odor filter **431**, which is a non-limiting example of odor filter **231** in FIG. **2**, fits onto filter housing **420** at groove **432**. Hydrophobic filter **434**, which is a non-limiting example of hydrophobic filter **234** in FIG. **2**, is ultrasonically welded to filter housing **420** at protrusion **439**. However, as described above, hydrophobic filter **234** may be coupled to filter housing **420** in a variety of ways. Odor filter **431** is sandwiched in between filter housing **420** and hydrophobic filter **434** at groove **432**, and may or may not be independently attached to filter housing **420**.

As indicated by arrows **443**, gas, such as air, is permitted to flow though hydrophobic filter **434** and odor filter **431**, via gap **445**. However, hydrophobic filter **434** prevents liquid, such as exudate, from passing through gap **445**. Also, odor filter **431** prevents odor from passing through gap **445**.

Turning now to FIG. **5**, an interlocking seal between compressible bellows **510**, which is a non-limiting example of compressible bellows **210** in FIG. **2**, and filter housing **520**, which is a non-limiting example of filter housing **220** in FIG. **2**, is shown in accordance with an illustrative embodiment. The interlocking seal shown in FIG. **5** allows compressible bellows **510** to be snapped onto filter housing **520**, while maintaining an air-tight seal for the proper operation of the reduced pressure treatment system. Compressible bellows **510** includes snap protrusion **530**. Filter housing **520** includes undercut **540** into which snap protrusion **530** may be inserted. The large area of contact between compressible bellows **510**

and filter housing **520**, as indicated by span **550**, assists in maintaining a proper seal between compressible bellows **510** and filter housing **520**.

Turning now to FIG. **6**, an interlocking seal between compressible bellows **610**, which is a non-limiting example of compressible bellows **210** in FIG. **2**, and filter housing **620**, which is a non-limiting example of filter housing **220** in FIG. **2**, is shown in accordance with an illustrative embodiment. Similar to the interlocking seal in FIG. **5**, filter housing **620** includes undercut **640** into which snap protrusion **630** of compressible bellows **610** may be inserted. However, in contrast to FIG. **5**, the illustrative embodiment of the interlocking seal in FIG. **6** shows that compressible bellows **610** includes ribs **655**. Filter housing **620** also includes indentations **660**, into which ribs **655** may be inserted. The use of interlocking ribs **655** and indentations **660** may help create a tighter seal between compressible bellows **610** and filter housing **620**.

Turning now to FIG. **7**, outlet valve **724**, which is a non-limiting example of outlet valve **224** in FIG. **2**, is shown in accordance with an illustrative embodiment. Outlet valve **724** is coupled to end wall **730** of compressible bellows **710**, which is a non-limiting example of compressible bellows **210** in FIG. **2**. End wall **730** may be made of metal, plastic, rubber, or any other material. In FIG. **7**, end wall **730** may be welded onto compressible bellows **710** at the spans indicated by spans **735**. However, end wall **730** may also be screwed, glued, bolted, air-lock sealed, or snapped onto compressible bellows **710**.

Gas, such as air, flows out of compressible bellows **710** as indicated by arrows **740**. In particular, gas flows out of compressible bellows **710** through gaps **741** and then pass through the space between outlet valve flaps **742** and **743** and end wall **730**. However, because flaps **742** and **743** are only opened by the flow of gas out of compressible bellows **710**, gas cannot enter compressible bellows **710** through outlet valve **724**. In FIG. **7**, outlet valve **724** is an umbrella valve. However, outlet valve **724** may be any valve capable of allowing gas to pass out of compressible bellows **710** while restraining or preventing gas from passing out of compressible bellows **710**.

Turning now to FIG. **8**, a connection between end wall **830**, which is a non-limiting example of end wall **730** in FIG. **7**, and compressible bellows **810**, which is a non-limiting example of compressible bellows **710** in FIG. **7**, is shown in accordance with an illustrative embodiment. In contrast to FIG. **7**, the illustrative embodiment of FIG. **8** shows protrusion **840** included on compressible bellows **810**. End wall **830** also includes indentation **850** into which protrusion **840** may be inserted. The use of protrusion **840** and indentation **850** may help create a tighter seal between compressible bellows **810** and end wall **830**, as well as help reduce the amount of welding necessary to couple compressible bellows **810** to end wall **830**.

Turning now to FIG. **9**, compressible bellows **910**, which is a non-limiting example of compressible bellows **210** in FIG. **2**, is shown in accordance with an illustrative embodiment. Compressible bellows **910** is coupled to filter housing **920**, which is a non-limiting example of filter housing **220** in FIG. **2**. In FIG. **9**, end wall **930** of compressible bellows **910** does not include an outlet valve. Instead, compressible bellows **910** includes outlet valves at the portions of compressible bellows **910** indicated by brackets **940** and **945**. In addition, compressible bellows **910** may include one or more outlet valves around the perimeter of compressible bellows **910** indicated by brackets **940** and **945**. Additional details regarding the outlet valves at the portion of compressible bellows **910** indicated by brackets **940** and **945** is described in FIGS. **10-13** below.

Turning now to FIG. **10**, an umbrella outlet valve that is part of compressible bellows **1010**, which is a non-limiting example of compressible bellows **910** in FIG. **9**, is shown in accordance with an illustrative embodiment. The outlet valve includes flap **1025**. Filter housing **1020**, which is a non-limiting example of filter housing **920** in FIG. **9**, includes gap **1027**. Upon moving compressible bellows **1010** from an uncompressed position to a compressed position, gas flows out of compressible bellows through gap **1027** as indicated by arrow **1029**. The flow of gas lifts flap **1025** into open position **1035**, as indicated by arrow **1037**, thereby allows the passage of gas out of compressible bellows **1010**. When air is not flowing out of compressible bellows **1010**, such as when compressible bellows is moving from a compressed position to an uncompressed position, flap **1025** is in contact with filter housing **1020** such that gas may not flow into compressible bellows **1010**.

In this embodiment, compressible bellows **1010** may also have protrusion **1040**, which fits into indentation **1045** of filter housing **1020**. The fitting of protrusion **1040** into indentation **1045** helps to maintain a snap fit between compressible bellows **1010** and filter housing **1020**.

Turning now to FIG. **11**, an outlet valve located on compressible bellows **1110** at the general portion of compressible bellows **1110** that contacts filter housing **1120** is shown in accordance with an illustrative embodiment. Compressible bellows **1110** is a non-limiting example of compressible bellows **910** in FIG. **9**, and filter housing **1120** is a non-limiting example of filter housing **920** in FIG. **9**.

Upon compression of compressible bellows **1110** from an uncompressed position to a compressed position, gas attempts to flow out of compressible bellows **1110** through gap **1127** as indicated by arrow **1129**. The gas encounters flap **1125**, which includes rib **1135**. The strength of rib **1135**, which may depend on the thickness or material of rib **1135**, determines the amount of force that must be exerted by the gas in order to bend flap **1125** such that air can escape compressible bellows **1110**. Thus, the strength of rib **1335** also determines the amount of pressure that is created by compressible bellows **1110**, and which is ultimately transferred to a tissue site, such as tissue site **105** in FIG. **1**.

Turning now to FIG. **12**, the outlet valve of FIG. **11** in an open position is shown in accordance with an illustrative embodiment. The flow of gas, which is indicated by arrow **1229**, has exerted sufficient force upon flap **1225** of compressible bellows **1210** such that flap **1225** has been bent to allow for the release of gas from compressible bellows **1210**. In particular, the force exerted by the flow of gas is sufficient to overcome the strengthening force of rib **1235**.

Turning now to FIG. **13**, an outlet valve located on a side wall of bellow pump **1310**, which is a non-limiting example of compressible bellows **1110** and **1210** in FIGS. **11** and **12**, respectively, is shown in accordance with an illustrative embodiment. FIG. **13** shows flap **1325**, which is a non-limiting example of flaps **1125** and **1225** in FIGS. **11** and **12**, respectively. FIG. **13** also shows rib **1335**, which is a non-limiting example of ribs **1135** and **1235** in FIGS. **11** and **12**, respectively. As described above, rib **1335** may be used to adjust the force required to open flap **1325**, thereby varying the amount of pressure that may be created by bellow pump **1310**.

Turning now to FIG. **14**, reduced pressure treatment system **1400**, which is encased by a casing having top casing portion **1402** and bottom casing portion **1404**, is shown in accordance with an illustrative embodiment. Reduced pressure treatment system **1400** includes pump **1488**, which

includes compressible bellows **1410**, filter housing **1420**, odor filter **1431**, hydrophobic filter **1434**, and variable volume chamber **1415**.

FIG. **14** shows the orientation of the different components of reduced pressure treatment system **1400** relative to one another. Compressible bellows **1410**, which is a non-limiting example of compressible bellows **210** in FIG. **2**, may be inserted into top casing portion **1402**. Top casing portion also includes grip **1403**. Grip **1403** may be composed of rubber, plastic, or any other material capable of improving tactile grip on top casing portion **1402**.

The cross sectional shape of compressible bellows **1410** is an oval. In particular, compressible bellows **1410** has an elongated middle portion **1412** and rounded end portions **1414**. The cross sectional shape of compressible bellows **1410** allows compressible bellows **1410** to fit into top casing portion **1402**. The cross sectional shape of compressible bellows **1410** may vary depending on the shape of the casing for the reduced pressure treatment system.

Compressible bellows **1410** couples to filter housing **1420**, which is a non-limiting example of filter housing **220** in FIG. **2**. Filter housing **1420** includes grid mesh **1425** through which gas may flow.

Odor filter **1431** and hydrophobic filter **1434**, which are non-limiting examples of odor filter **231** and hydrophobic filter **234** in FIG. **2**, respectively, fit into filter housing **1420** as described in the previous Figures. Fixed volume chamber **415**, which is a non-limiting example of fixed volume chamber **215** in FIG. **2**, couples to filter housing **1420**. Fixed volume chamber **415** may be inserted into bottom casing portion **1404**.

Top casing portion **1402** and bottom casing portion **1404** may be composed of any material. For example, top casing portion **1402** and bottom casing portion **1404** may be composed of materials that are suitable to protect the inner components of reduced pressure treatment system **1400**. Non-limiting examples of the material from which top casing portion **1402** and bottom casing portion **1404** may be composed include plastic, metal, or rubber.

Turning now to FIG. **15**, compressible bellows **1510** and **1512**, each of which is a non-limiting example of compressible bellows **210** in FIG. **2**, is shown in accordance with an illustrative embodiment. Compressible bellows **1510** and **1512** can replace the oval compressible bellows **1410** in FIG. **14**. Thus, compressible bellows **1510** and **1512** may be configured to be inserted into a top casing portion, such as top casing portion **1402** in FIG. **14**. Each of compressible bellows **1510** and **1512** are coupled to filter housing **1520**, which is a non-limiting example of filter housing **1420** in FIG. **14**.

The use of two compressible bellows **1510** and **1512** allows the reduced pressure treatment system in which compressible bellows **1510** and **1512** are employed to continue functioning in the event that one of the compressible bellows leaks or otherwise fails. The use of compressible bellows **1510** and **1512** may also improve manufacturing efficiency in the construction of a reduced pressure treatment system. For example, the manufacture of compressible bellows **1510** and **1512** having a circular cross-section may be easier than the manufacture of a single compressible bellows having an elongated cross section that allows the single compressible bellows to fit inside top casing portion **1402**.

Turning now to FIG. **16**, reduced pressure treatment system **1600**, which is a non-limiting example of reduced pressure treatment system **1400** in FIG. **14**, is shown in accordance with an illustrative embodiment. Reduced pressure treatment system **1600** shows reduced pressure treatment system **1400** when reduced pressure treatment system **1400** has been assembled. In reduced pressure treatment system **1600**, top and bottom casing portions **1602** and **1604** encase the various components of reduced pressure treatment system **1600**, such as a compressible bellows, filter housing, odor filter, hydrophobic filter, and fixed volume chamber. Top and bottom casing portions **1602** and **1604** are non-limiting examples of top and bottom casing portions **1402** and **1404** in FIG. **14**, respectively.

Reduced pressure treatment system **1600** also includes visual indicators **1608**. Visual indicators **1608** indicate to a user an amount of reduced pressure to be delivered to a tissue site, such as tissue site **105** in FIG. **1**. In particular, the lines of visual indicators **1608** indicate the degree to which top casing portion **1602** has been compressed relative to bottom casing portion **1604**, and therefore also indicates the degree to which the one or more compressible bellows inside top casing portion **1502** has been compressed. Using visual indicators **1608**, a user can consistently deliver a desired amount of reduced pressure to a tissue site.

Reduced pressure treatment system also includes end cap **1612**. End cap **1512** fits onto bottom casing portion **1604** and may be coupled to delivery tube **1635**, which is a non-limiting example of delivery tube **135** in FIG. **1**. Additional details regarding end cap **1512** will be described in FIGS. **17** and **18** below.

Turning now to FIG. **17**, the fitting between bottom casing portion **1704**, which is a non-limiting example of bottom casing portion **1604** in FIG. **14**, and end cap **1712**, which is a non-limiting example of end cap **1612** in FIG. **16**, is shown in accordance with an illustrative embodiment. End cap **1712** fits onto bottom casing portion **1704** at bottom casing portion end groove **1716**. End cap **1712** includes inlet valve connector **1721**, which may be coupled to an inlet valve on fixed volume chamber **1715**. Thus, liquid, such as exudate, may be delivered to fixed volume chamber **1715** through a delivery tube via inlet valve connector **1721**. End cap **1712** may be welded, screwed, glued, bolted, air-lock sealed, snapped, or otherwise coupled to bottom casing portion **1704**.

Turning now to FIG. **18**, bottom casing portion **1804**, which is a non-limiting example of bottom casing portion **1704** in FIG. **17**, is shown coupled to end cap **1812**, which is a non-limiting example of end cap **1712** in FIG. **17**, in accordance with an illustrative embodiment. In FIG. **17**, end cap **1812** is shown to be attached to bottom casing portion **1804** and delivery tube **1835**. Delivery tube **1835** is a non-limiting example of delivery tube **135** in FIG. **1**. In this illustrative embodiment of FIG. **17**, delivery tube **1835** extends upwardly toward bottom casing portion **1804** at the point at which delivery tube **1835** protrudes from end cap **1812**. This upward orientation of delivery tube **1835** may allow a user to place reduced pressure delivery system **1800** in convenient or otherwise desirable locations, such as on a clothes garment. In one example, reduced pressure treatment system **1800** may be placed in a pocket, sock, or on a belt during treatment. When used on a belt, the casing of reduced pressure treatment system **1800** may also include a belt clip.

Turning now to FIG. **19**, a process that may be implemented by a manually-actuated pump, such as pump **102** in FIG. **1** or any other illustrative embodiment of the reduced pressure treatment system described above, is shown in accordance with an illustrative embodiment.

The process compresses a variable volume chamber having a variable volume from an uncompressed position to a compressed position (step **1905**). The process determines whether the compressed position yields a threshold level of reduced pressure as indicated by an indicator, such as visual indicators **1608** in FIG. **16** (step **1910**). If the process determines that the

compressed position does not yield a threshold level of reduced pressure as indicated by an indicator, the process further compresses or expands the variable volume chamber (step **1915**). The process then returns to step **1910**.

If the process determines that the compressed position yields a threshold level of reduced pressure as indicated by an indicator, the process may then expand the variable volume chamber from the compressed position to the uncompressed position (step **1920**). The process transfers reduced pressure from the variable volume chamber to a fixed volume chamber (step **1925**). The process may then transfer the reduced pressure to a tissue site via a manifold and delivery tube (step **1930**).

The flowcharts and block diagrams in the different depicted embodiments illustrate the architecture, functionality, and operation of some possible implementations of the apparatus and methods. In some alternative implementations, the function or functions noted in the block may occur out of the order noted in the figures. For example, in some cases, two blocks shown in succession may be executed substantially concurrently, or the blocks may sometimes be executed in the reverse order, depending upon the functionality involved.

The illustrative embodiments described herein separate the chambers in which exudates and other liquids are collected from the reduced-pressure-generating chamber. Thus, the compressible pumps are capable of being re-charged (i.e. the flexible bellows can be re-depressed) even when liquids are present in the fixed volume chamber. When the fixed volume chamber becomes completely full of exudate or other liquids, the fixed volume chamber may then be emptied before additional reduced pressure may be applied by the compressible pump. Also, the illustrative embodiments, unlike traditional manually-activated systems, are capable of delivering a measured and consistent amount of pressure to a tissue site during a particular reduced pressure treatment cycle. The illustrative embodiments are further capable of consistently repeating the targeted pressure each time the compressible pump is recharged. These pressure delivery capabilities exist regardless of the orientation or location of the fixed volume chamber.

We claim:

1. A manually-actuated pump for applying reduced pressure at a tissue site, the manually-actuated pump comprising:

a casing having a top casing portion and a bottom casing portion;

at least one variable volume chamber disposed within the casing that is manually compressible into a plurality of positions;

a fixed volume chamber disposed within the casing and being in communication with the at least one variable volume chamber; and

a filter housing disposed within the casing between the fixed volume chamber and the at least one variable volume chamber, the filter housing having a hydrophobic filter that prevents liquid from entering the at least one variable volume chamber, the fixed volume chamber having reduced pressure that is applied to the tissue site in response to a movement of the at least one variable volume chamber from a compressed position in the plurality of positions to an uncompressed position in the plurality of positions;

wherein the top casing portion is configured to slide relative to the bottom casing portion as the at least one variable volume chamber moves from the compressed position to the uncompressed position.

2. The apparatus of claim **1**, wherein the filter housing includes an odor filter that restrains a transmission of odor from the fixed volume chamber to the at least one variable volume chamber.

3. The apparatus of claim **2**, wherein the odor filter is a carbon odor filter comprising charcoal.

4. The apparatus of claim **3**, wherein the hydrophobic filter and the odor filter are coupled to a side of the filter housing that is nearer to the fixed volume chamber.

5. The apparatus of claim **4**, wherein the odor filter is sandwiched between the filter housing and the hydrophobic filter.

6. The apparatus of claim **1**, wherein the at least one variable volume chamber is at least one bellows, and wherein the at least one bellows comprises at least one corrugated side wall to form at least one compressible bellows.

7. The apparatus of claim **6**, wherein the at least one corrugated side wall comprises an elastic resilient material, wherein the movement of the at least one variable volume chamber from the compressed position to the uncompressed position is caused by an expansion force, and wherein the expansion force is caused by an expansion of the at least one corrugated side wall.

8. The apparatus of claim **6**, wherein the at least one compressible bellows has an oval cross sectional shape.

9. The apparatus of claim **1**, wherein the liquid is exudate at the tissue site, further comprising:

a manifold, wherein the reduced pressure in the fixed volume chamber causes the exudate to move from the tissue site to the fixed volume chamber via the manifold.

10. The apparatus of claim **9**, wherein the fixed volume chamber further comprises:

an inlet valve at an inlet point, wherein the exudate flows from the manifold into the fixed volume chamber via the inlet valve, and wherein the inlet valve prevents the exudate from exiting the fixed volume chamber at the inlet point.

11. The apparatus of claim **10**, wherein the inlet valve is located at the center of a bottom wall of the fixed volume chamber.

12. The apparatus of claim **11**, further comprising:

a delivery tube coupling the fixed volume chamber to the manifold, wherein the exudate moves from the manifold to the fixed volume chamber through the delivery tube.

13. The apparatus of claim **12**, wherein the at least one variable volume chamber further comprises:

at least one outlet valve, wherein gas exits the at least one variable volume chamber via the at least one outlet valve in response to a second movement of the at least one variable volume chamber from the uncompressed position to the compressed position, and wherein the at least one outlet valve prevents gas from entering the at least one variable volume chamber through the at least one outlet valve.

14. The apparatus of claim **13**, wherein the at least one outlet valve and the inlet valve are located along a central longitudinal axis of the manually-actuated pump.

15. The apparatus of claim **13**, wherein the at least one outlet valve is centrally located on a top wall of the at least one variable volume chamber.

16. The apparatus of claim **13**, wherein the at least one outlet valve is located on at least one side wall of the at least one variable volume chamber.

17. The apparatus of claim **1**, wherein the at least one variable volume chamber is sealingly coupled to the filter housing by at least one interlocking seal.

18. The apparatus of claim **1**, wherein the at least one variable volume chamber has a larger volume in the uncompressed position than in the compressed position.

19. The apparatus of claim **1**, further comprising:

a pressure feedback system, wherein the pressure feedback system indicates an amount of reduced pressure being applied by the at least one variable volume chamber.

20. A manually-actuated pump for applying reduced pressure at a tissue site, the manually-actuated pump comprising:

a casing having a top casing portion and a bottom casing portion;

at least one compressible bellows positioned in the casing that is compressible into a plurality of positions, the at least one compressible bellows having at least one corrugated side wall, the at least one corrugated side wall comprising an elastic resilient material;

a fixed volume chamber positioned in the casing having an inlet valve at an inlet point, wherein exudate flows from the tissue site into the fixed volume chamber via the inlet valve, the inlet valve preventing the exudate from exiting the fixed volume chamber at the inlet point, the inlet valve being located at the center of a bottom wall of the fixed volume chamber;

a filter housing positioned in the casing and disposed between the fixed volume chamber and the at least one compressible bellows, the filter housing having a hydrophobic filter that prevents exudate from entering the at least one compressible bellows and a carbon odor filter that restrains a transmission of odor from the fixed volume chamber to the at least one compressible bellows via the filter housing, the fixed volume chamber having reduced pressure that is applied to the tissue site in response to a movement of the at least one compressible bellows from a compressed position in the plurality of positions to an uncompressed position in the plurality of positions, the movement being caused by an expansion force from the at least one corrugated side wall; and

at least one outlet valve through which gas exits the at least one compressible bellows in response to a second movement of the at least one compressible bellows from the uncompressed position to the compressed position, the at least one outlet valve preventing the gas from entering the at least one compressible bellows through the at least one outlet valve;

wherein the to casing portion is configured to slide relative to the bottom casing portion as the at least one variable volume chamber moves from the compressed position to the uncompressed position.

21. A manually-actuated pump for applying reduced pressure at a tissue site, the manually-actuated pump comprising:

at least one variable volume chamber that is manually compressible into a plurality of positions;

a fixed volume chamber in communication with the at least one variable volume chamber;

a filter housing having a hydrophobic filter that prevents liquid from entering the at least one variable volume chamber, the filter housing being located in between the at least one variable volume chamber and the fixed volume chamber, the fixed volume chamber having reduced pressure that is applied to the tissue site in response to a movement of the at least one variable volume chamber from a compressed position in the plurality of positions to an uncompressed position in the plurality of positions; and

a casing enclosing the at least one variable volume chamber, the fixed volume chamber, and the filter housing;

wherein the at least one variable volume chamber and the fixed volume chamber are directly coupled to the filter housing; and

wherein the casing has two portions configured to slide relative to each other as the at least one variable volume chamber moves from the compressed position to the uncompressed position.

22. The manually-actuated pump of claim **21**, wherein the at least one variable volume chamber further comprises:

at least one outlet valve, wherein gas exits the at least one variable volume chamber via the at least one outlet valve in response to a second movement of the at least one variable volume chamber from the uncompressed position to the compressed position, and wherein the at least one outlet valve prevents gas from entering the at least one variable volume chamber through the at least one outlet valve.

23. The manually-actuated pump of claim **21**, further comprising:

a pressure feedback system, wherein the pressure feedback system indicates an amount of reduced pressure being applied by the at least one variable volume chamber.

24. The manually-actuated pump of claim **21**, wherein the at least one variable volume chamber is at least one bellows.

* * * * *