US008157760B2

(12) **United States Patent**
Criado et al.

(10) **Patent No.: US 8,157,760 B2**
(45) **Date of Patent: Apr. 17, 2012**

(54) **METHODS AND SYSTEMS FOR ESTABLISHING RETROGRADE CAROTID ARTERIAL BLOOD FLOW**

(75) Inventors: **Enrique Criado**, Ann Arbor, MI (US); **Tony M. Chou**, Hillsborough, CA (US); **Michi E. Garrison**, Half Moon Bay, CA (US); **Gregory M. Hyde**, Menlo Park, CA (US); **Alan Schaer**, San Jose, CA (US); **Richard Renati**, Los Gatos, CA (US)

(73) Assignee: **Silk Road Medical, Inc.**, Palo Alto, CA (US)

(*) Notice: Subject to any disclaimer, the term of this patent is extended or adjusted under 35 U.S.C. 154(b) by 777 days.

(21) Appl. No.: **12/176,250**

(22) Filed: **Jul. 18, 2008**

(65) **Prior Publication Data**

US 2009/0024072 A1 Jan. 22, 2009

Related U.S. Application Data

(60) Provisional application No. 60/950,384, filed on Jul. 18, 2007, provisional application No. 61/026,308, filed on Feb. 5, 2008.

(51) **Int. Cl.**
A61M 5/00 (2006.01)
A61B 5/02 (2006.01)
A61F 2/06 (2006.01)

(52) **U.S. Cl.** **604/9**; 623/1.11; 600/504

(58) **Field of Classification Search** 604/8–9, 604/500, 507–509, 96.01, 101.01, 101.05, 604/102.02, 108; 606/191, 192, 194, 200; 623/1.11; 600/504
See application file for complete search history.

(56) **References Cited**

U.S. PATENT DOCUMENTS

4,771,777	A	9/1988	Horzewski	
4,840,690	A	6/1989	Melinyshyn	
4,865,581	A *	9/1989	Lundquist et al.	600/18
4,921,478	A	5/1990	Solano	
4,921,479	A	5/1990	Grayzel	

(Continued)

FOREIGN PATENT DOCUMENTS

EP 0 427 429 5/1991

(Continued)

OTHER PUBLICATIONS

Coppi et al. (2005). "PRIAMUS Proximal flow blockage cerebral protection during carotid stenting: Results from a multicenter Italian registry" J. Cardiovasc. Surg. 46:219-227.

(Continued)

Primary Examiner — Tatyana Zalukaeva
Assistant Examiner — Philip R Wiest
(74) *Attorney, Agent, or Firm* — Fred C. Hernandez; Mintz, Levin, Cohn, Ferris, Glovsky and Popeo, P.C.

(57) **ABSTRACT**

Interventional procedures on the carotid arteries are performed through a transcervical access while retrograde blood flow is established from the internal carotid artery to a venous or external location. A system for use in accessing and treating a carotid artery includes an arterial access device, a shunt fluidly connected to the arterial access device, and a flow control assembly coupled to the shunt and adapted to regulate blood flow through the shunt between at least a first blood flow state and at least a second blood flow state. The flow control assembly includes one or more components that interact with the blood flow through the shunt.

33 Claims, 22 Drawing Sheets

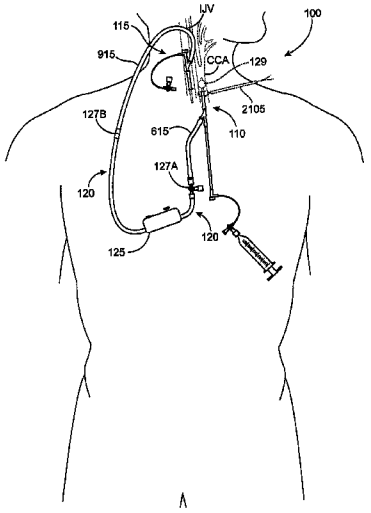

Imperative Care v. Inari Medical
US Patent 11,969,333
Imperative Care Ex. 1017

U.S. PATENT DOCUMENTS

5,135,484 A 8/1992 Wright
5,250,060 A 10/1993 Cabo
5,328,470 A 7/1994 Nabel
5,328,471 A 7/1994 Slepian
5,380,284 A 1/1995 Don Michael
5,429,605 A 7/1995 Bernd
5,769,821 A 6/1998 Abrahamson et al.
5,782,800 A 7/1998 Yoon
5,833,650 A 11/1998 Imran
5,876,367 A 3/1999 Kaganov et al.
5,895,399 A 4/1999 Barbut
5,910,154 A 6/1999 Tsugita et al.
6,090,072 A 7/2000 Kratoskia
6,146,370 A 11/2000 Barbut
6,161,547 A 12/2000 Barbut
6,165,199 A 12/2000 Barbut
6,206,868 B1 * 3/2001 Parodi 604/500
6,258,115 B1 7/2001 Dubrul
6,270,477 B1 8/2001 Bagaoisan
6,295,989 B1 10/2001 Connors, III
6,306,163 B1 10/2001 Fitz
6,312,444 B1 11/2001 Barbut
6,364,900 B1 4/2002 Heuser
6,383,172 B1 5/2002 Barbut
6,413,235 B1 7/2002 Parodi
6,423,032 B2 * 7/2002 Parodi 604/103.07
6,423,086 B1 7/2002 Barbut
6,454,741 B1 9/2002 Muni
6,464,664 B1 10/2002 Jonkman
6,471,672 B1 10/2002 Brown
6,482,172 B1 11/2002 Thramann
6,533,800 B1 3/2003 Barbut
6,540,712 B1 4/2003 Parodi
6,551,268 B1 4/2003 Kaganov et al.
6,555,057 B1 4/2003 Barbut et al.
6,558,356 B2 5/2003 Barbut
6,582,396 B1 6/2003 Parodi
6,582,448 B1 6/2003 Boyle
6,595,953 B1 7/2003 Coppi
6,595,980 B1 7/2003 Barbut
6,605,074 B2 8/2003 Zadno-Azizi et al.
6,623,471 B1 9/2003 Barbut
6,626,886 B1 9/2003 Barbut
6,632,236 B2 10/2003 Hogendijk
6,638,245 B2 10/2003 Miller
6,645,222 B1 11/2003 Parodi
6,652,480 B1 11/2003 Imran
6,663,652 B2 12/2003 Daniel
6,669,721 B1 12/2003 Bose et al.
6,682,505 B2 * 1/2004 Bates et al. 604/96.01
6,695,861 B1 2/2004 Rosenberg et al.
6,702,782 B2 3/2004 Miller
6,711,436 B1 3/2004 Duhaylongsod
6,736,790 B2 5/2004 Barbut et al.
6,755,847 B2 6/2004 Eskuri
6,764,464 B2 7/2004 McGuckin, Jr. et al.
6,783,511 B2 8/2004 Komtebedde et al.
6,830,579 B2 12/2004 Barbut
6,837,881 B1 1/2005 Barbut
6,840,949 B2 1/2005 Barbut
6,855,136 B2 2/2005 Dorros et al.
6,875,231 B2 4/2005 Anduiza et al.
6,878,140 B2 * 4/2005 Barbut 604/509
6,887,227 B1 5/2005 Barbut
6,902,540 B2 6/2005 Dorros et al.
6,905,490 B2 6/2005 Parodi
6,908,474 B2 6/2005 Hogendijk
6,929,634 B2 8/2005 Dorros et al.
6,936,060 B2 * 8/2005 Hogendijk et al. 606/200
6,958,059 B2 10/2005 Zadno-Azizi
6,979,346 B1 12/2005 Hossainy et al.
7,004,924 B1 2/2006 Brugger
7,004,931 B2 2/2006 Hogendijk
7,029,488 B2 4/2006 Schonholz et al.
7,033,344 B2 4/2006 Imran
7,048,758 B2 5/2006 Boyle
7,063,714 B2 6/2006 Dorros
7,083,594 B2 8/2006 Coppi
7,108,677 B2 9/2006 Courtney et al.
7,232,452 B2 6/2007 Adams
7,232,453 B2 6/2007 Shimon
7,367,982 B2 5/2008 Nash
7,374,560 B2 5/2008 Resseman et al.
7,374,561 B2 5/2008 Barbut
7,422,579 B2 9/2008 Wahr
7,458,980 B2 12/2008 Barbut
7,905,856 B2 3/2011 McGuckin, Jr. et al.
2001/0044598 A1 11/2001 Parodi
2001/0044634 A1 11/2001 Don Michael
2001/0049517 A1 12/2001 Zadno
2002/0052620 A1 5/2002 Barbut
2002/0052640 A1 5/2002 Bigus
2002/0068899 A1 6/2002 McGuckin et al.
2002/0087119 A1 7/2002 Parodi
2002/0128679 A1 9/2002 Turovskiy et al.
2002/0173815 A1 11/2002 Hogenkijk
2003/0040762 A1 2/2003 Dorros et al.
2003/0050600 A1 3/2003 Ressemann et al.
2003/0065356 A1 4/2003 Tsugita et al.
2003/0069468 A1 4/2003 Bolling
2003/0186203 A1 10/2003 Aboud
2003/0212304 A1 11/2003 Lattouf
2004/0116946 A1 6/2004 Goldsteen et al.
2004/0127913 A1 7/2004 Voss et al.
2004/0249435 A1 12/2004 Andreas
2005/0096726 A1 5/2005 Sequin
2005/0124973 A1 6/2005 Dorros
2005/0131453 A1 6/2005 Parodi
2005/0154344 A1 7/2005 Chang
2005/0154349 A1 7/2005 Renz et al.
2005/0228402 A1 10/2005 Hofmann
2005/0228432 A1 10/2005 Hogendijk
2005/0267323 A1 12/2005 Dorros
2005/0273051 A1 12/2005 Coppi
2006/0149350 A1 7/2006 Patel et al.
2006/0167437 A1 7/2006 Valencia
2006/0200191 A1 9/2006 Zadno-Azizi
2007/0123925 A1 5/2007 Benjamin
2007/0123926 A1 5/2007 Sater et al.
2007/0198049 A1 8/2007 Barbut
2007/0249997 A1 10/2007 Goodson et al.
2008/0140010 A1 6/2008 Kennedy et al.
2008/0200946 A1 8/2008 Braun
2008/0208329 A1 8/2008 Bishop et al.
2009/0018455 A1 1/2009 Chang
2009/0254166 A1 10/2009 Chou et al.
2010/0042118 A1 2/2010 Garrison et al.

FOREIGN PATENT DOCUMENTS

EP 1649829 4/2006
WO 95/05209 2/1995
WO 98/38930 9/1998
WO 99/45835 9/1999
WO 99/65420 12/1999
WO 00/32266 8/2000
WO WO 00/76390 12/2000
WO 02/32495 4/2002
WO 03/090831 11/2003
WO 2004/006803 1/2004
WO 2005/051206 6/2005
WO 2007/136946 11/2007
WO 2009/012473 1/2009
WO 2009/099764 8/2009
WO 2009/100210 8/2009
WO 2010/019719 2/2010

OTHER PUBLICATIONS

Adami, M.D., et al., "Use of the Parodi Anti-Embolism System in Carotid Stenting: Italian Trial Results" J Endovasc Ther 2002; 9:147-154.

Alexandrescu et al. (2006) "Filter-protected carotid stenting via a minimal cervical access with transitory aspirated reversed flow during initial passage of the target lesion" J. Endovasc. Ther. 13(2):196-204.

Bates M.D., et al. "Reversal of the Direction of Internal Carotid Artery Blood Flow by Occlusion of the Common and External Carotid Arteries in a Swine Model" Catherization and Cardiovascular Intervention 60:270-275 (2003).
Bates, M.D., et al. "Internal Carotid Artery Flow Arrest/Reversal Cerebral Protection Techniques" The West Virginal Medical Journal, Mar./Apr. 2004, vol. 99.
Bergeron et al. (1999). "Percutaneous stenting of the internal carotid artery: the European CAST I Study" J. Endovasc. Surg. 6:15-159.
Bergeron P. et al. (1996) "Recurrent Carotid Disease: Will Stents be an alternative to surgery?" J Endovasc Surg; 3: 76-79.
Chang, M.D., "Carotid Angioplasty and Stenting Using Transcervical Occlusion and Protective Shunting Via a Mini Incision in the Neck: A New Technique for Difficult Femoral Access or Filter Placement May be the Better Carotid Artery Intervention" 30th Global: Vascular and Endovascular Issues, Techniques and Horizons.
Chang, M.D., et al, "A new approach to carotid angioplasty and stenting with transcervical occlusion and protective shunting: Why it may be a better carotid artery intervention" (J Vasc Surg 2004; 39:994-1002.).
Criado et al. (1997) "Evolving indications for and early results of carotid artery stenting" Am. J. Surg.; 174:111-114.
Criado, E., J. Fontcuberta, et al. (2007). "Transcervical carotid stenting with carotid artery flow reversal: 3-year follow-up of 103 stents." J Vasc Surg 46(5): 864-9.
Criado, M.D, et al. "Transcervical Carotid Artery Angioplasty and Stenting with Carotid Flow Reversal: Surgical Technique" Ann Vasc Surg 2004; 18: 257-261.
Criado, M.D., et al. "Carotid angioplasty with internal carotid artery flow reversal is well tolerated in the awake patient" Journal of Vascular Surgery, vol. 40, No. 1.
Criado, M.D., et al. "Transcervical carotid stenting with internal carotid artery flow reversal: Feasability and preliminary results" (J Vasc Surg 2004; 40: 476-83).
Diederich et al. (2004) "First Clinical experiences with an endovascular clamping system for neuroprotection during carotid stenting" *Eur. J. Vasc. Endovasc. Surg*. 28:629-633.
Diethrich et al., (1996). "Percutaneous techniques for endoluminal carotid interventions" J. Endovasc. Surg. 3:182-202.
Gray et al. (2007) "The CAPTURE registry: Results of carotid stenting with embolic protection in the post approval setting" *Cath. Cardovasc. Interven*. 69:341-348.
Henry et al. (1999) "Carotid stenting with cerebral protection: First clinical experience using the PercuSurge GuardWire System" *J. Endovasc. Surg*. 6:321-331.
Lin et al. (2005) "Protected carotid artery stenting and angioplasty via transfemoral versus transcervical approaches" Vasc. Endovasc. Surg. 39(6):499-503.
Lo et al. (2005) "Advantages and indications of transcervical carotid artery stenting with carotid flow reversal" J. Cardovasc. Surg (Torino). 46(3):229-239.
Luebke, T et al. (2007) "Meta-analysis of randomized trials comparing carotid endarterectomy and endovascular treatment" *Eur. J. Vasc. Endovasc. Surg*. 34:470-479.
MacDonald, S. (2006) "Is there any evidence that cerebral protection is beneficial?" *J. Cardiovasc. Surg*. 47:127-36.
Mas et al. (2006) "Endarterectomy versus stenting in patients with symptomatic severe carotid stenosis" *NEJM* 355:1660-71.
Matas et al. (2007). "Transcervical carotid stenting with flow reversal protection: Experience in high-risk patients" J. Vasc. Surg. 46:49-54.
MO.MA Brochure; Proximal Flow Blockage Cerebral Protection Device—INVATEC.
MomaPresn (AET) 2002 Biamino, G; MO.MA as a distal protective device, University of Leipzig—Heart Center Department of Clinical and Interventional; Angiology Leipzig, Germany; 2002.
Ohki, M.D., et al., "Efficacy of a proximal occlusion catheter with reversal of flow in the prevention of embolic events during carotid artery stenting: An experimental analysis" (J Vasc Surg 2001; 33:504-9).
Ouriel, K., R. K. Greenberg, et al. (2001). "Hemodynamic conditions at the carotid bifurcation during protective common carotid occlusion." J Vasc Surg 34(4): 577-80.
Parodi (2005). "Is flow reversal the best method of protection during carotid stenting?" J Endovasc. Ther. 12:166-170.
Parodi et al. (2000). "Initial evaluation of carotid angioplasty and stenting with three different cerebral protection devices" J. Vasc. Surg. 32:1127-1136.
Parodi, J. C., L. M. Ferreira, et al. (2005). "Cerebral protection during carotid stenting using flow reversal." J Vasc Surg 41(3): 416-22.
Pipinos et al. (2005). "Transcervical approach with protective flow reversal for carotid angioplasty and stenting" J. Endovasc. Ther. 12:446-453.
Pipinos et al. (2006). "Transcervical carotid stenting with flow reversal for neuroprotection: Technique, results, advantages, and limitations" 14(5):243-255.
Reimers et al. (2005). "Proximal endovascular flow blockage for cerebral protection during carotid artery stenting: Results from a prospective multicenter registry" J. Endovasc. Ther. 12:156-165.
Ribo et al. (2006). "Transcranial doppler monitoring of transcervical carotid stenting with flow reversal protection: a novel carotid revascularization technique" 27:2846-2849 (originally published online Sep. 28, 2006).
Stejskal, et al., "Experience of 500 Cases of Neurophysiological Monitoring in Carotid Endarterectomy", Acta Neurochir, 2007, 149:681-689.
Stecker t al., "Stent Placement in Common Carotid and Internal Carotid Artery Stenoses with Use of an Open Transcervical Approach in a Patient with Previous Endarterectomy"; J. Vasc Intery Radiol 2002; 13:413-417.
Theron, et al. "New Triple Coaxial Catheter System for Carotid Angioplasty with Cerebral Protection" AJNR 11:869-874, Sep./Oct. 1990 0195-6108/90/1106-0869 @ American Society of Neurology.
Criado, F.J., et al., Access strategies for carotid artery intervention. J Invasive Cardiol, 2000. 12(1): p. 61-8.
Alvarez et al. (2008). "Transcervical carotid stenting with flow reversal is safe in octogenarians: A preliminary safety study" *J. Vasc. Surg*. 47:96-100.
Bergeron et al. (2008) MEET Presentation, Cannes, French Riviera "Why I do not use routine femoral access for CAS".
Diethrich, E. B. (2004). The Direct Cervical Carotid Artery Approach. Carotid Artery Stenting: Current Practice and Techniques. N. Al-Mubarak, G. S. Roubin, S. Iyer and J. Vitek. Philadephia, Lippincott Williams & Wilkins: Chapter 11. pp. 124-136.
Feldtman, R. W., C. J. Buckley, et al. (2006). "How I do it: cervical access for carotid artery stenting." *Am J Surg* 192(6): 779-81.
Goldstein (2007) "Acute Ischemic Stroke Treatment in 2007" *Circ* 116:1504-1514.
Perez-Arjona, E. A., Z. DelProsto, et al. (2004). "Direct percutaneous carotid artery stenting with distal protection: technical case report." *Neurol Res* 26(3): 338-41.
Reekers, J. A. (1998). "A balloon protection sheath to prevent peripheral embolization during aortoiliac endovascular procedures." Cardiovasc Intervent Radiol 21(5): 431-3.

* cited by examiner

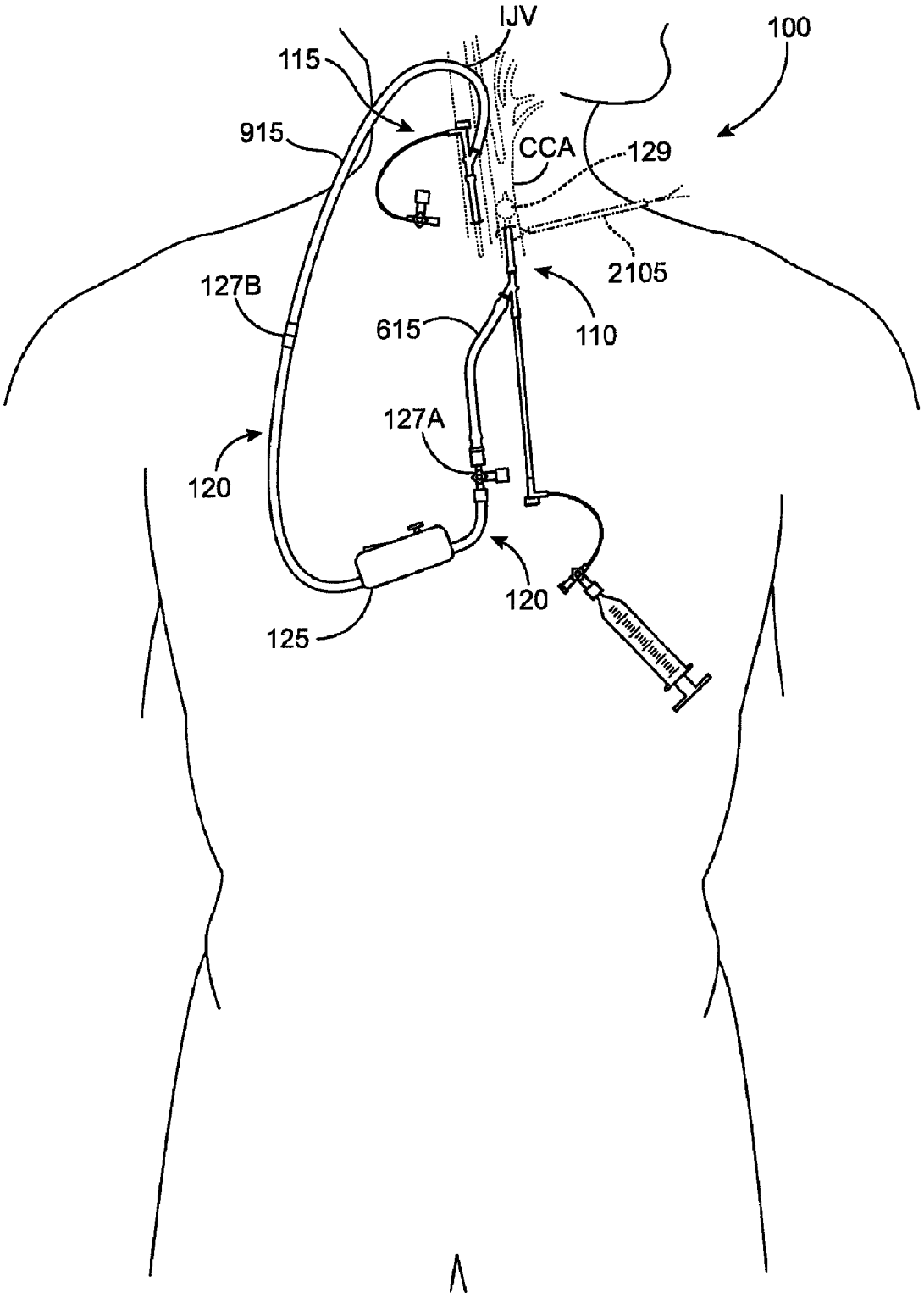

FIG. 1A

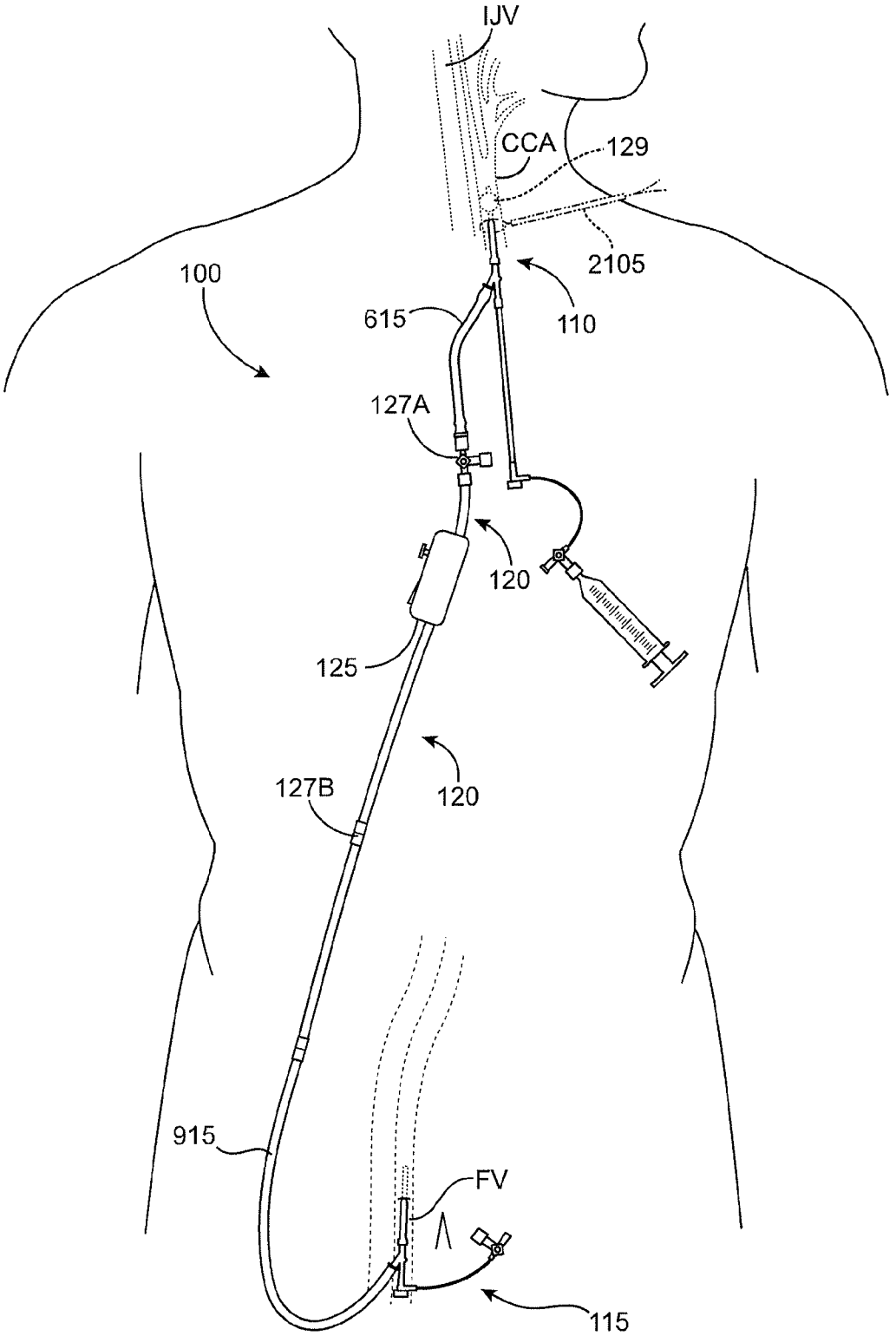

FIG. 1B

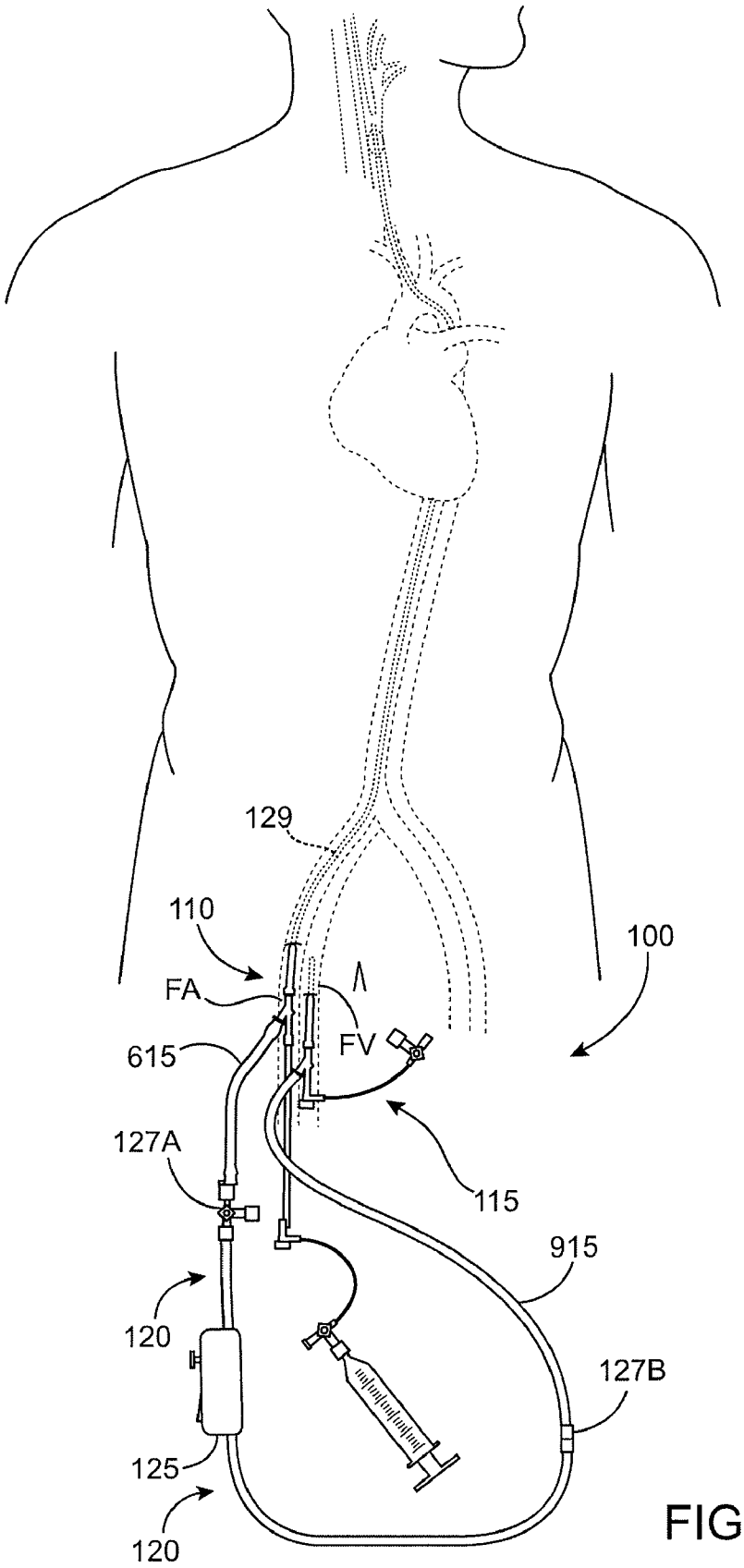

FIG. 1C

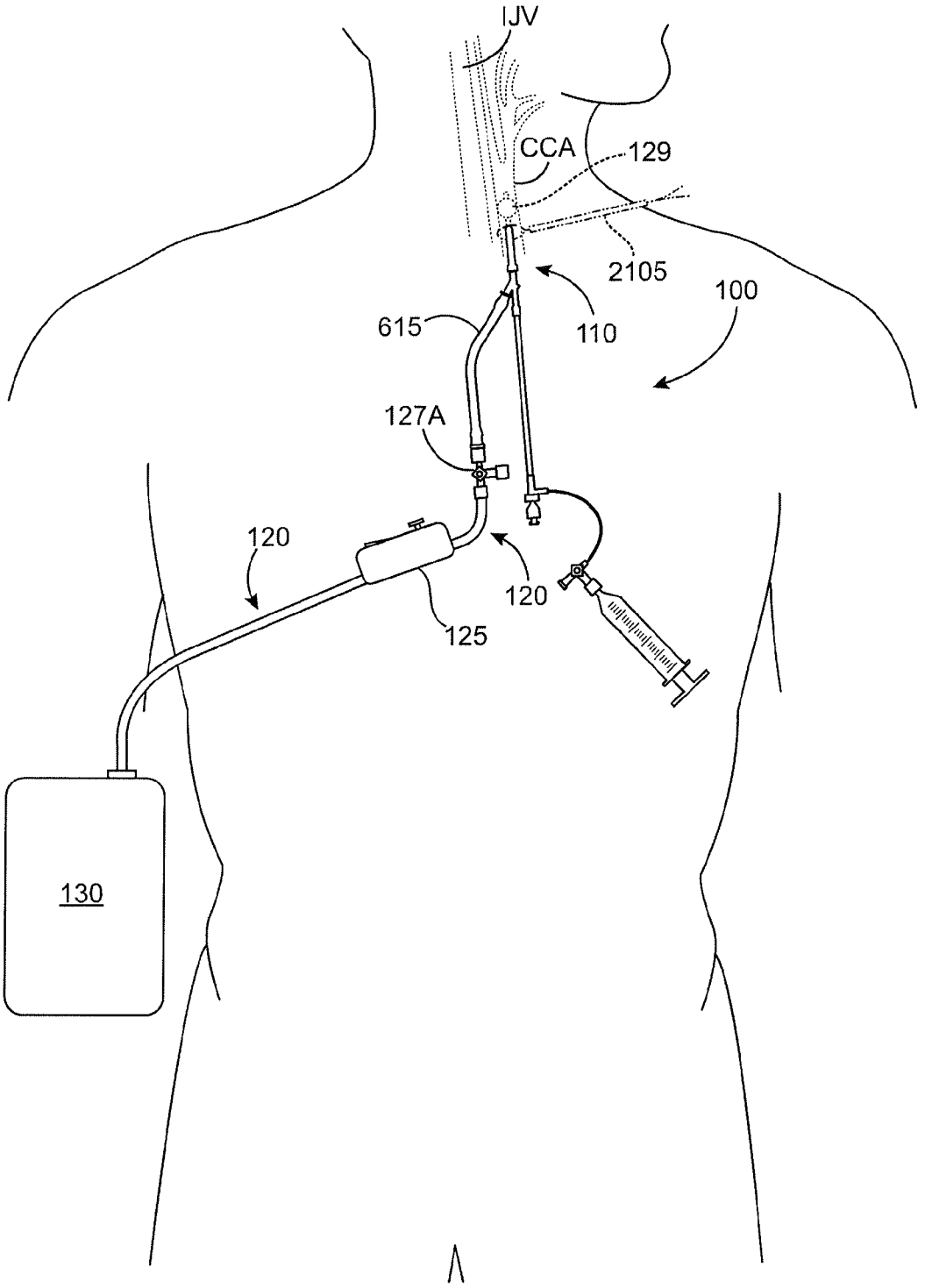

FIG. 1D

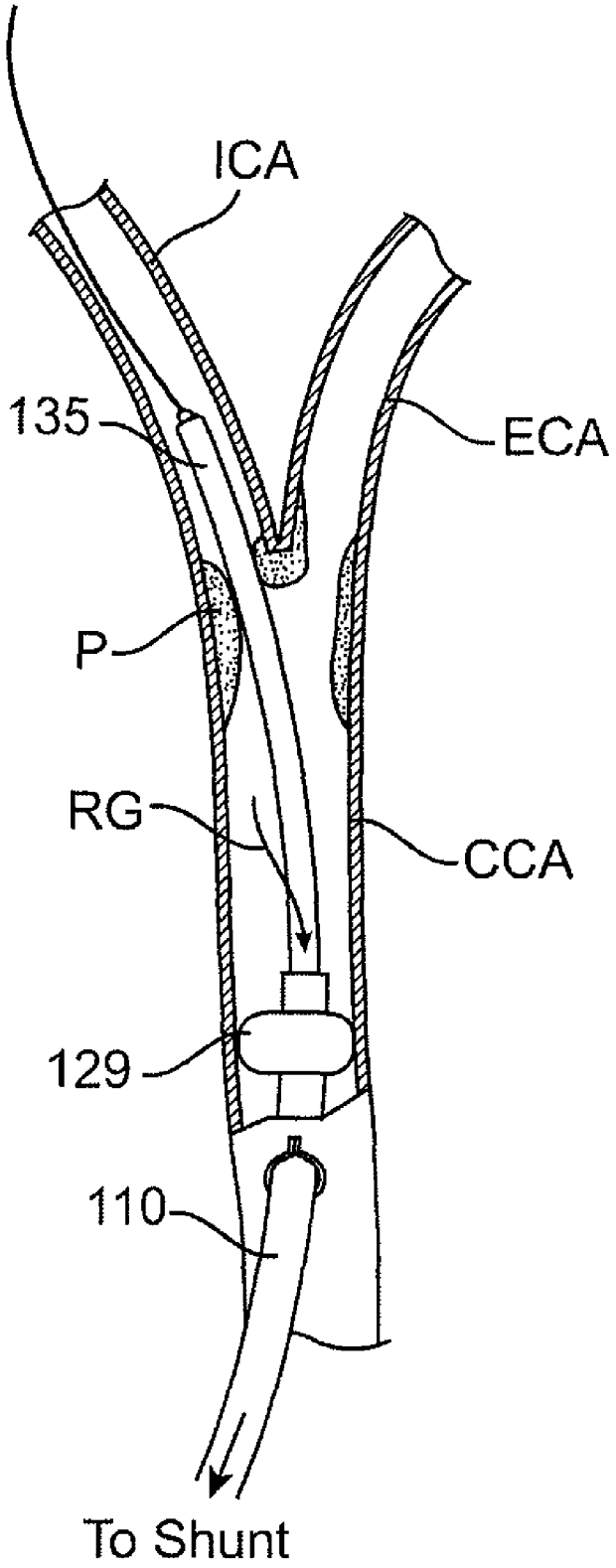

FIG. 2A

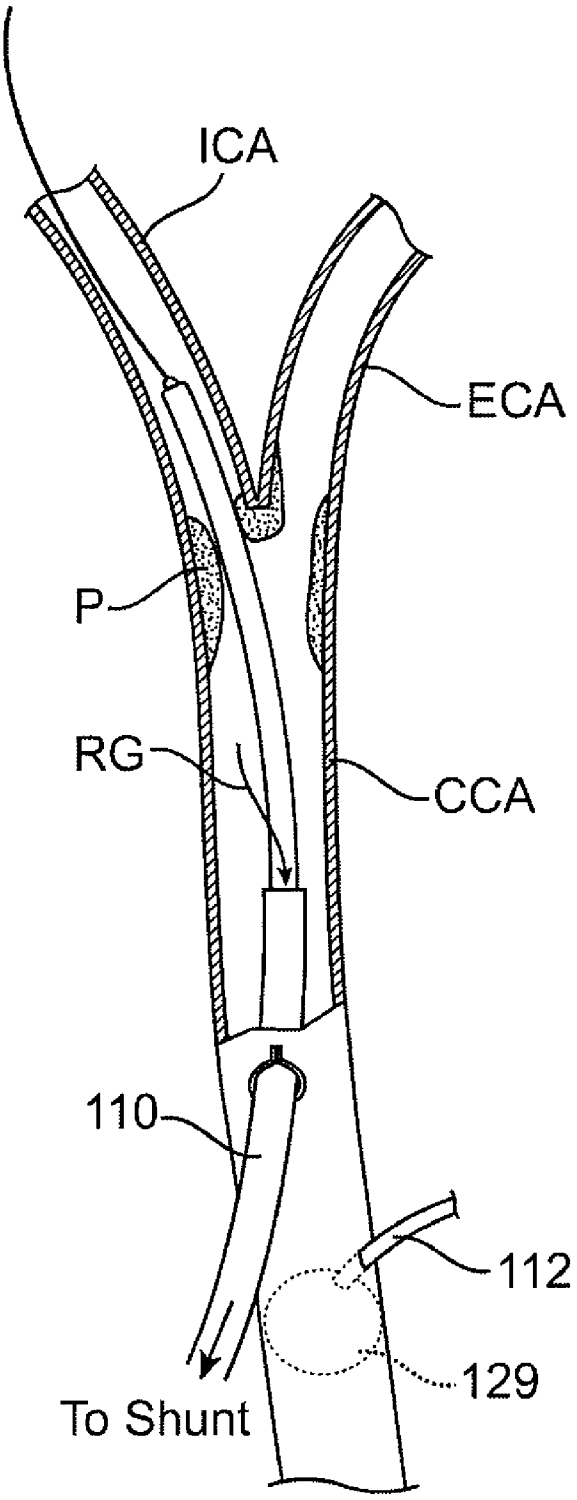

FIG. 2B

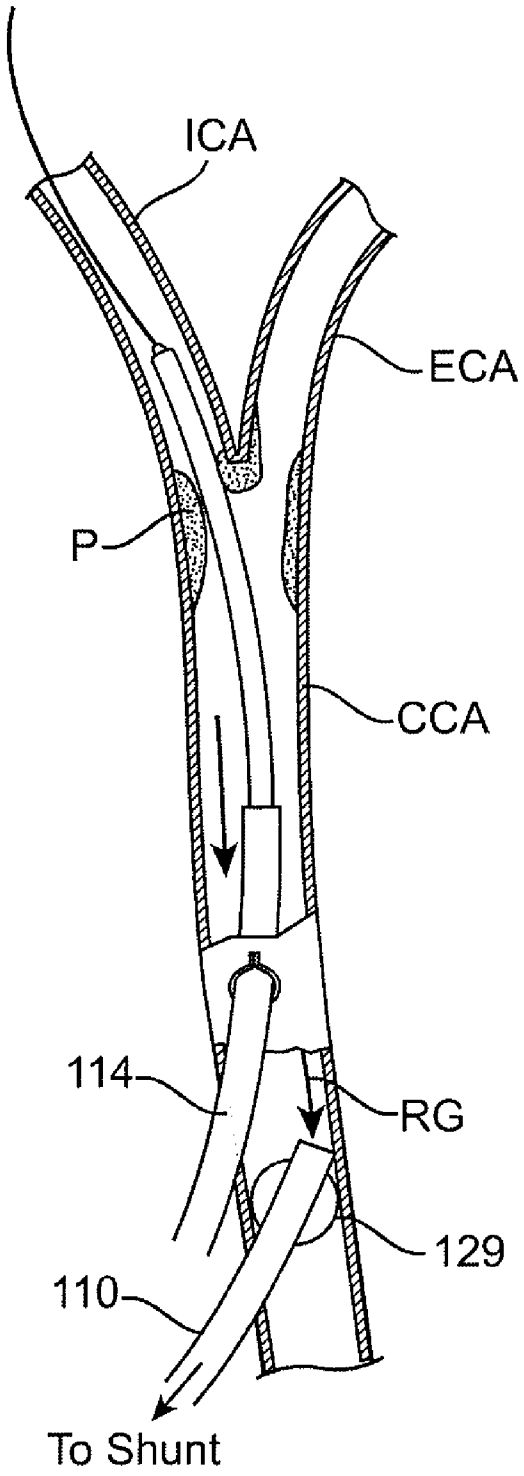

FIG. 2C

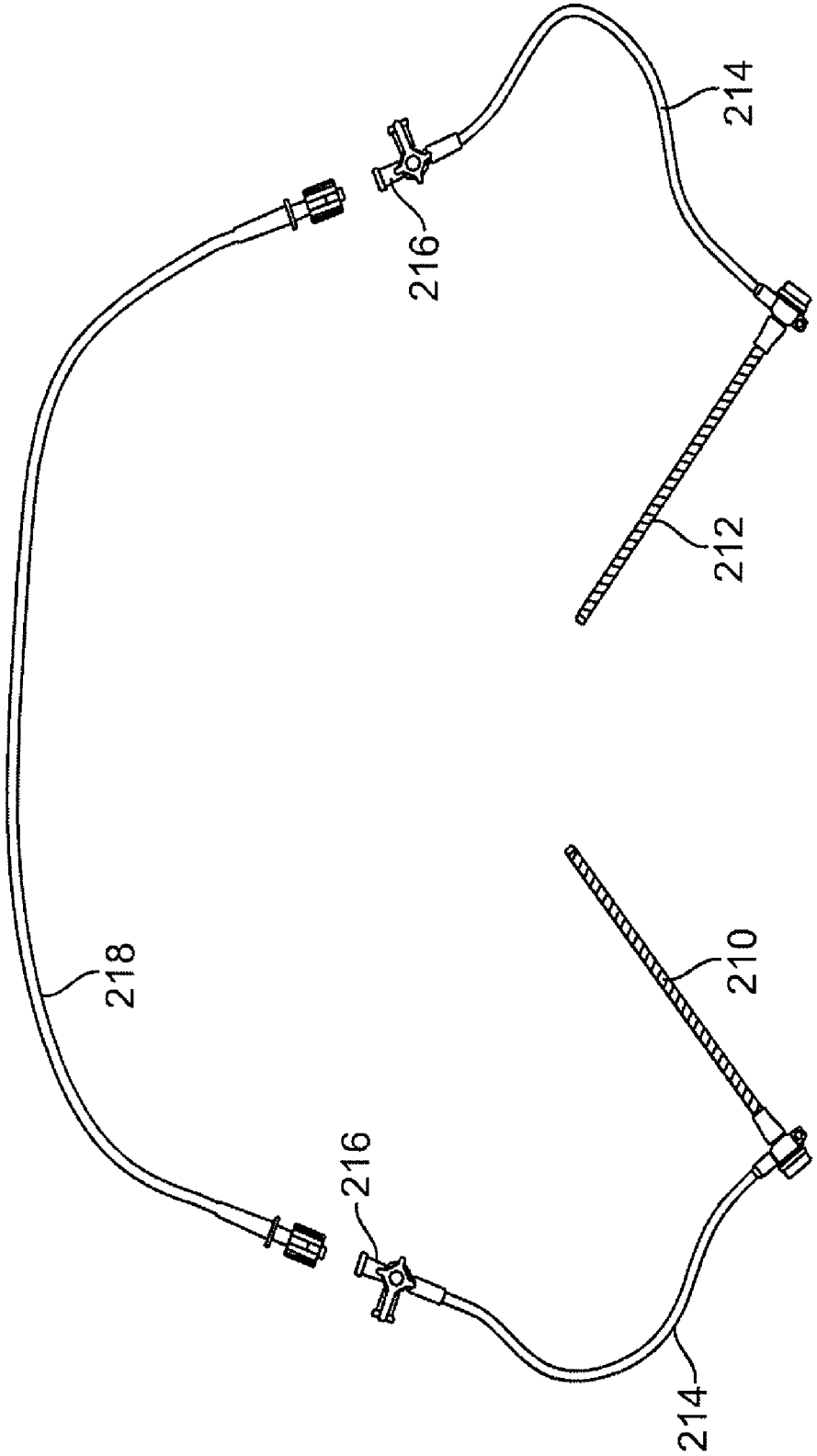

FIG. 3

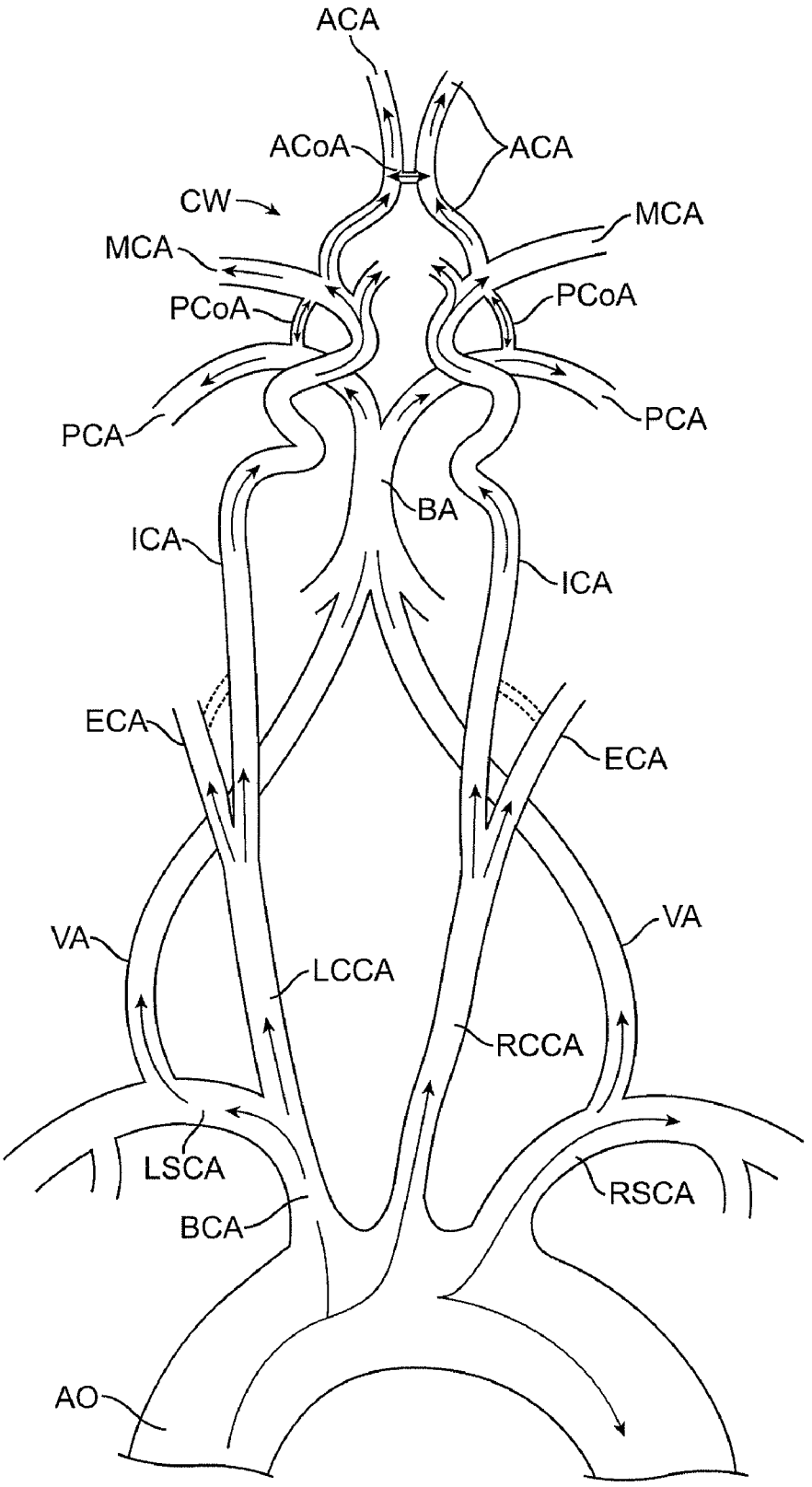
ACA
ACoA
ACA
CW
MCA
MCA
PCoA
PCoA
PCA
PCA
BA
ICA
ICA
ECA
ECA
VA
VA
LCCA
RCCA
LSCA
RSCA
BCA
AO

FIG. 4

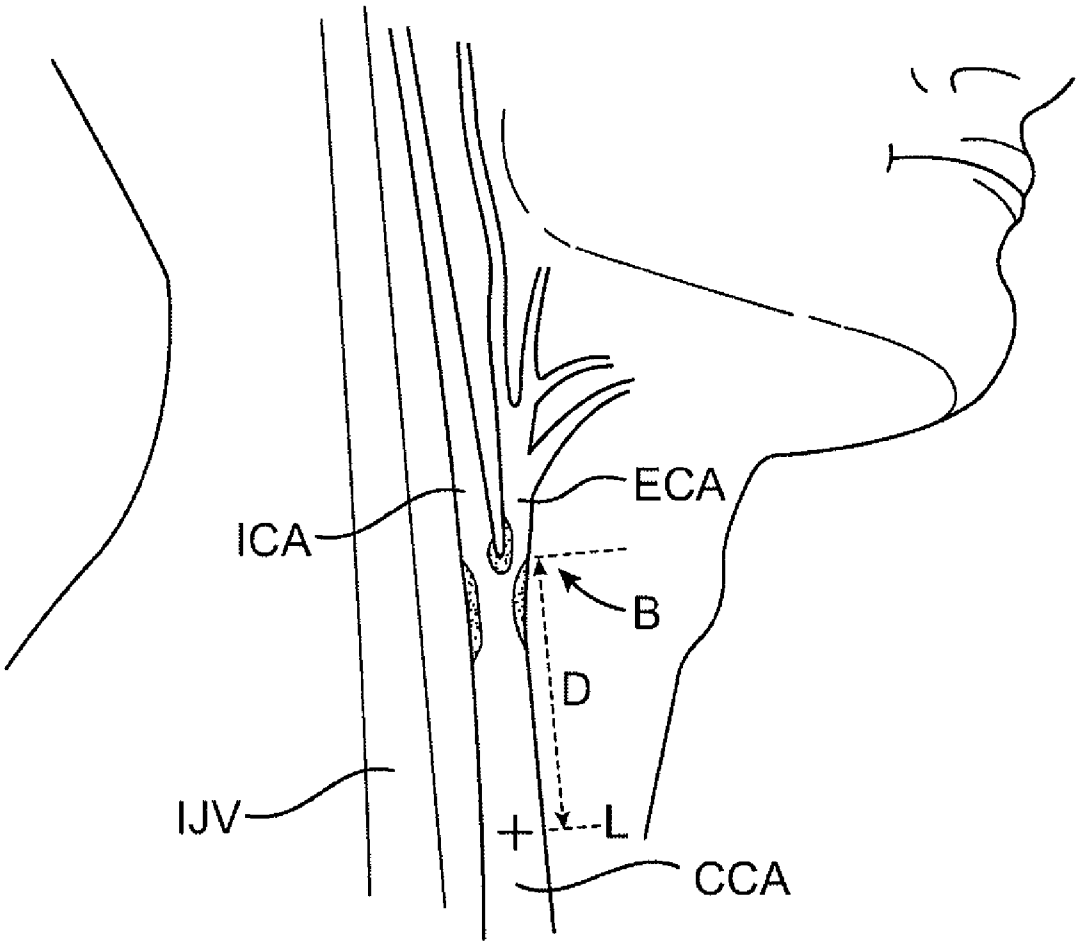

FIG. 5

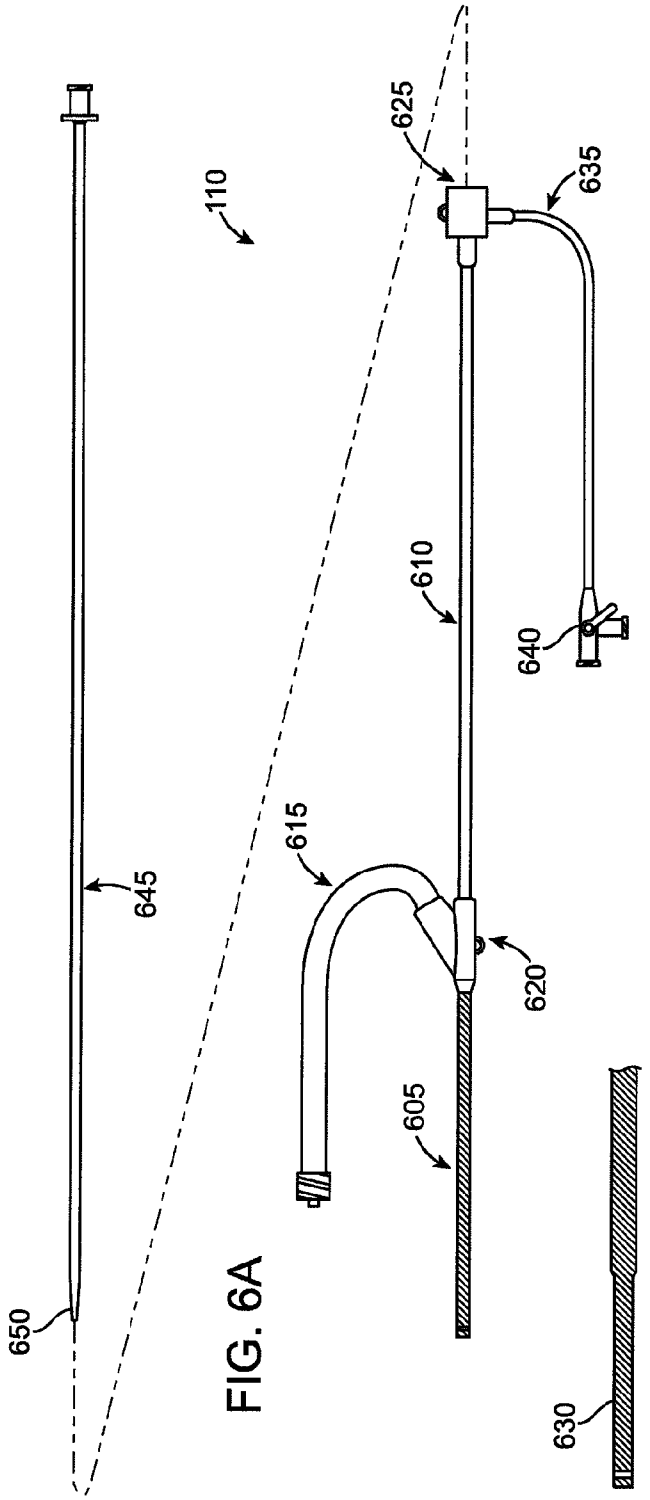

FIG. 6A

FIG. 6B

FIG. 7B

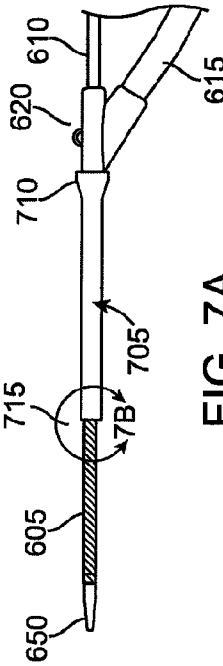

FIG. 7A

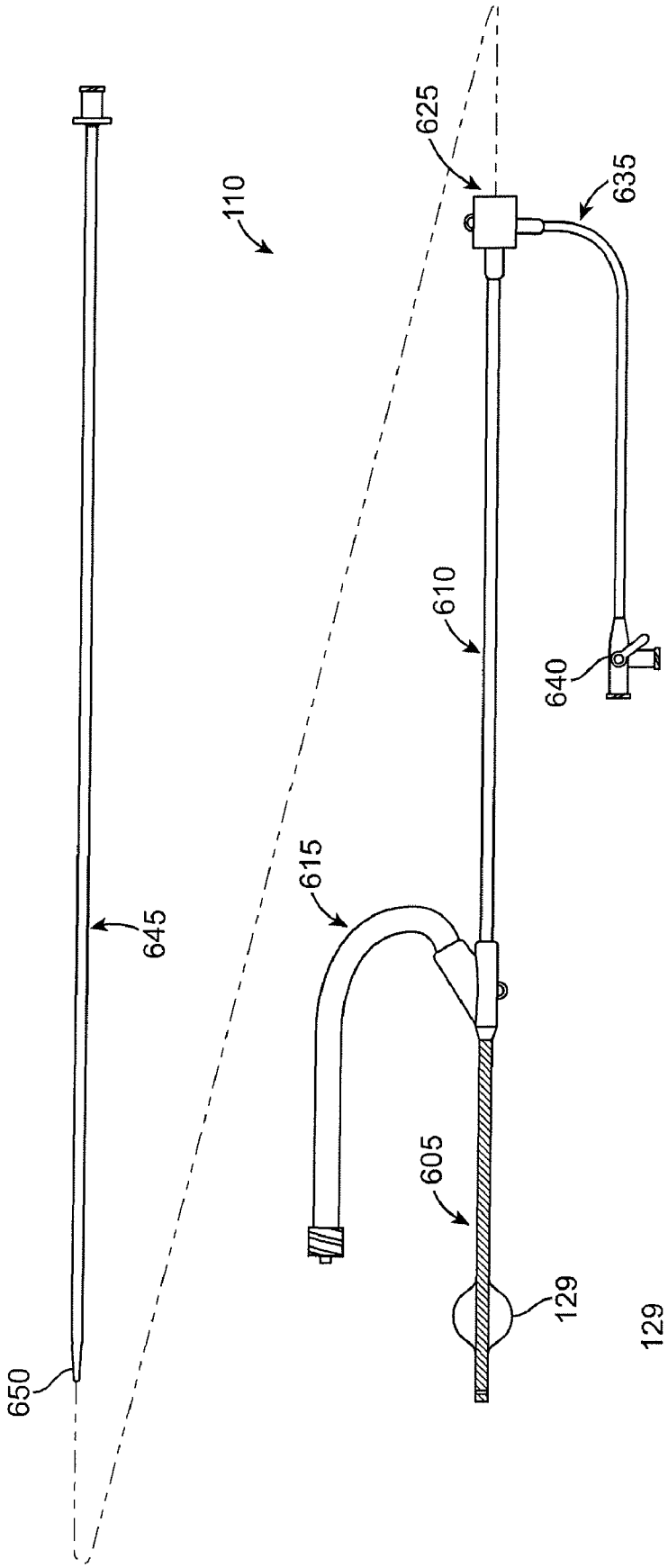

FIG. 8A

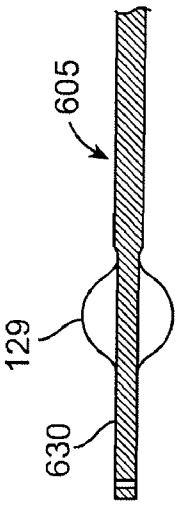

FIG. 8B

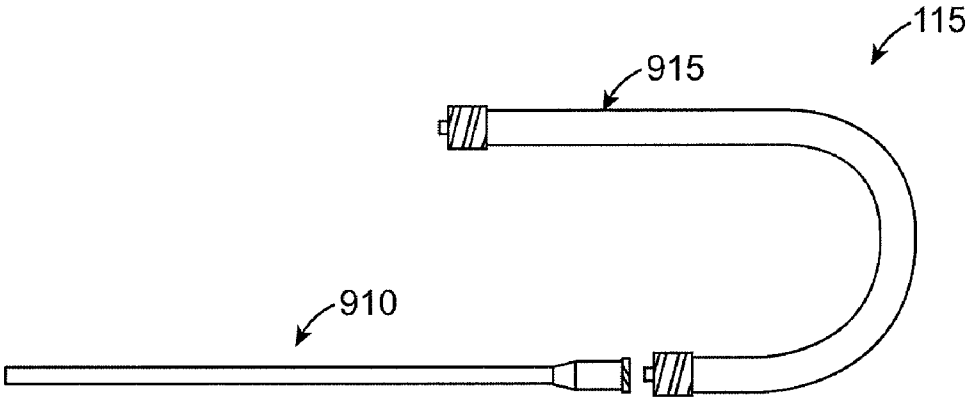

FIG. 9

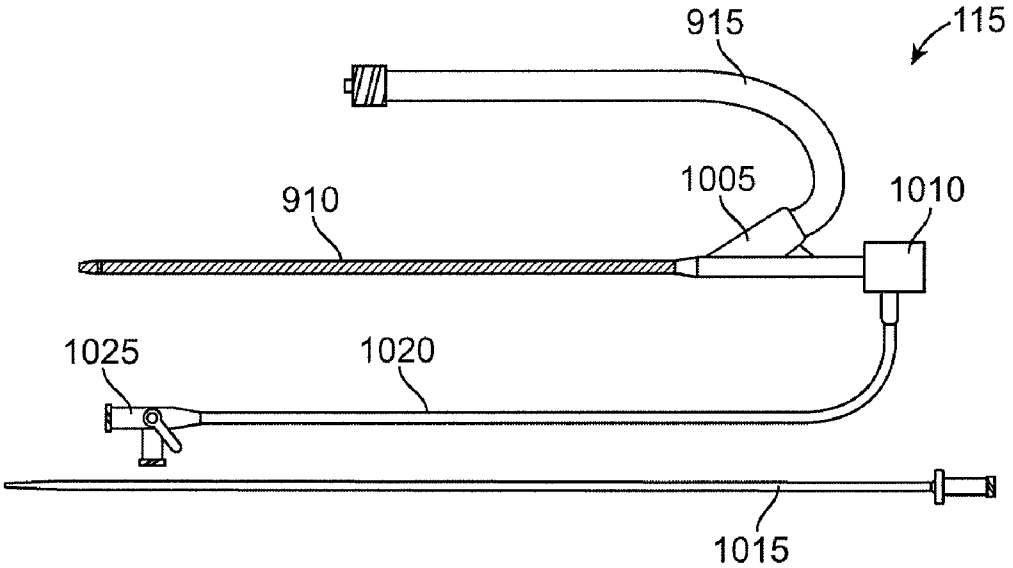

FIG. 10

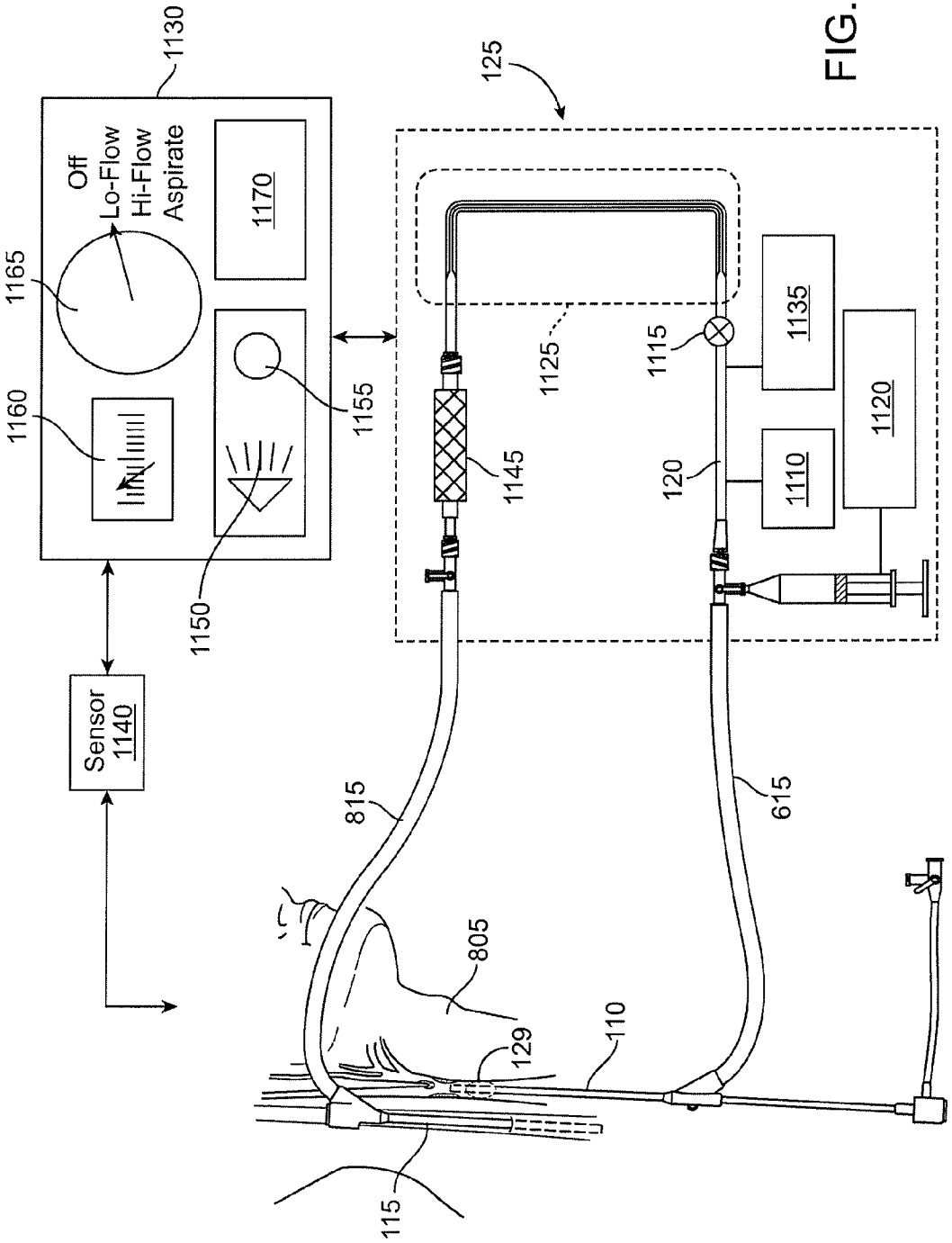
1130
Off
Lo-Flow
Hi-Flow
Aspirate
1165
1160
1170
1155
1150
Sensor
1140
125
1125
1115
1135
1120
1110
1145
120
815
805
129
110
115
615

FIG. 11

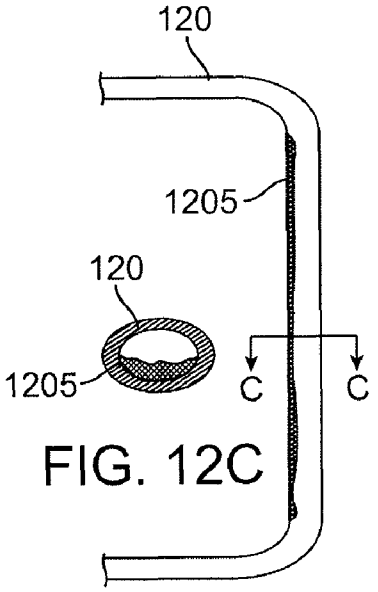

FIG. 12C

FIG. 12A

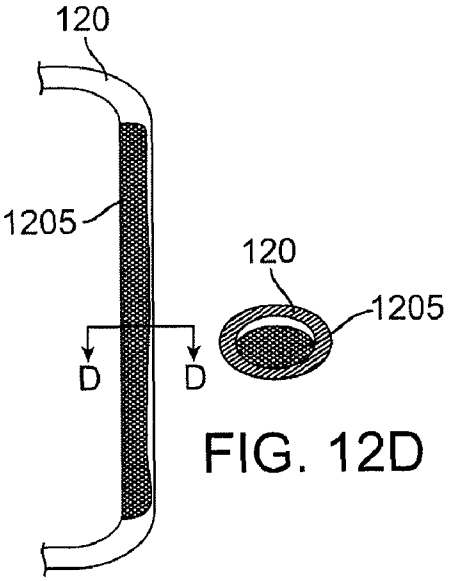

FIG. 12D

FIG. 12B

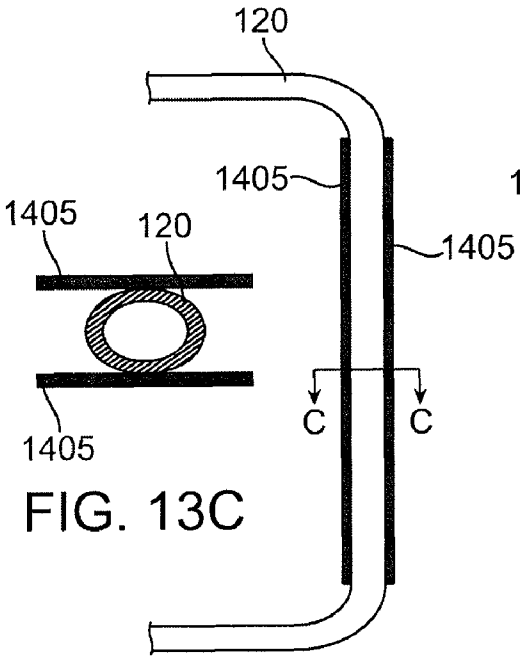

FIG. 13C

FIG. 13A

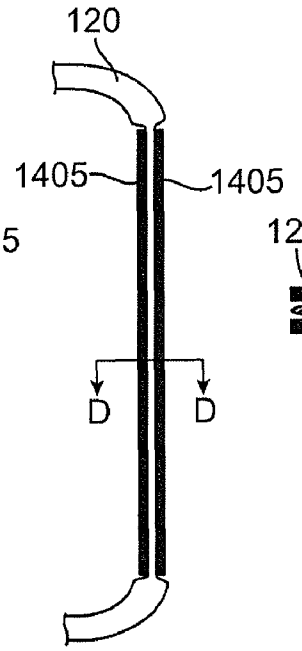

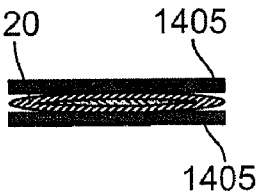

FIG. 13D

FIG. 13B

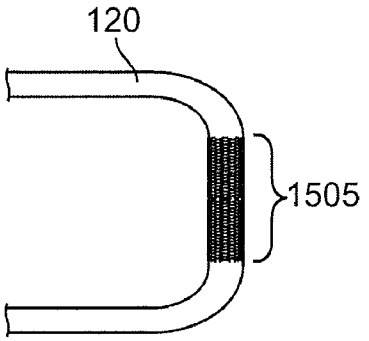

FIG. 14A

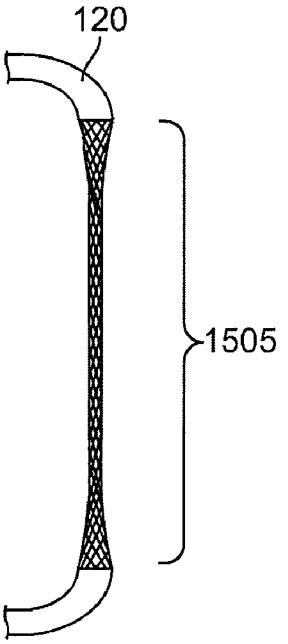

FIG. 14B

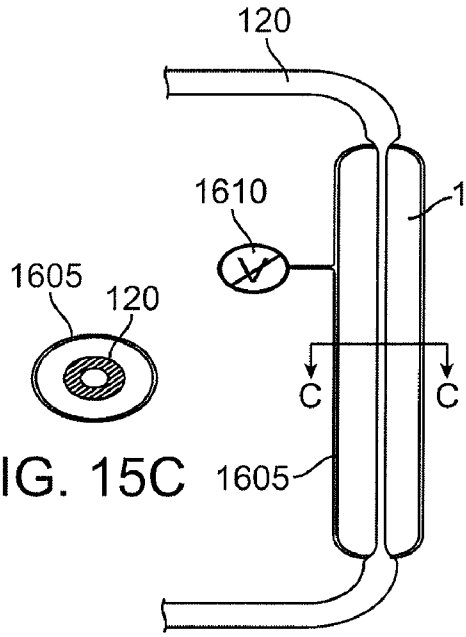

FIG. 15A

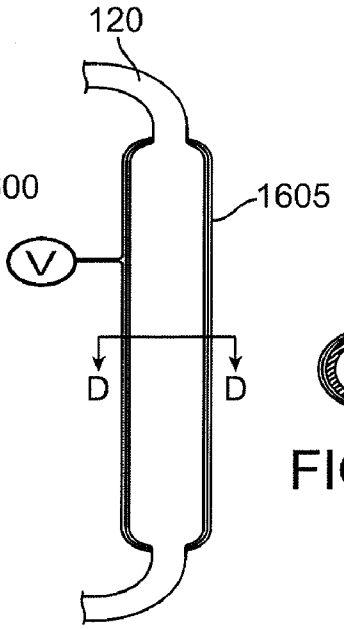

FIG. 15B

FIG. 15C

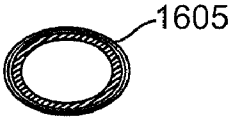

FIG. 15D

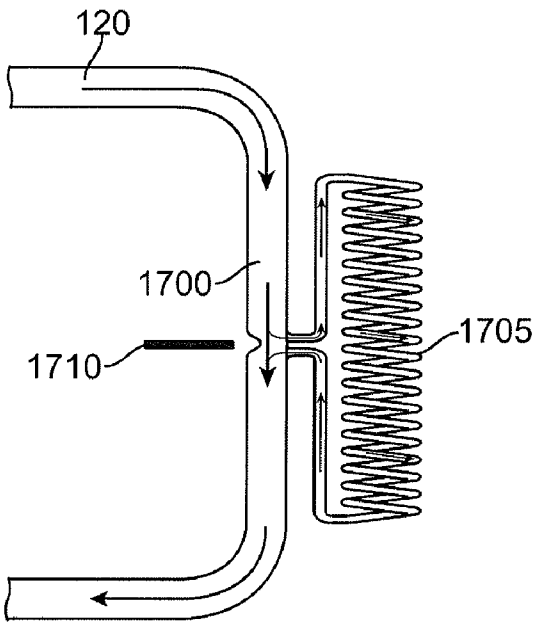

FIG. 16A

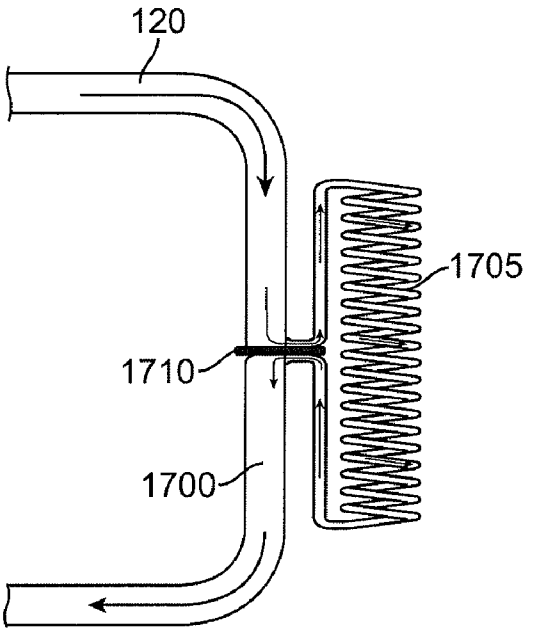

FIG. 16B

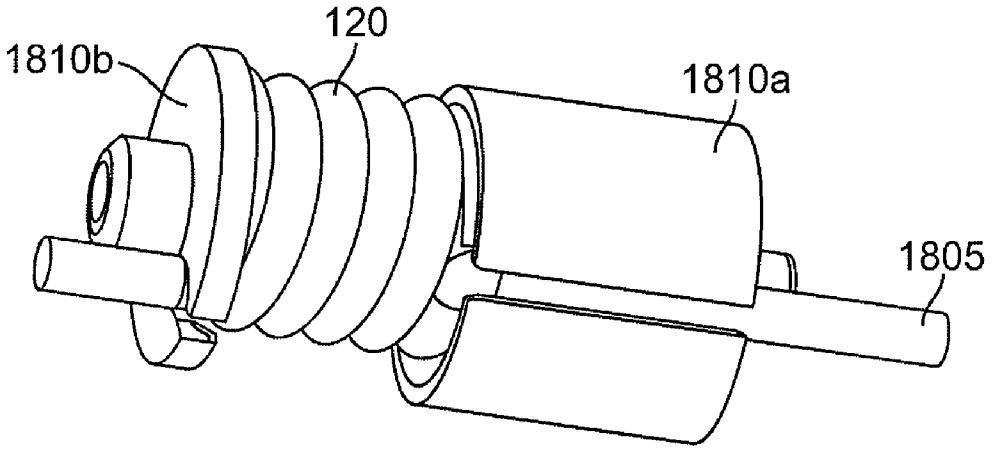

FIG. 17A

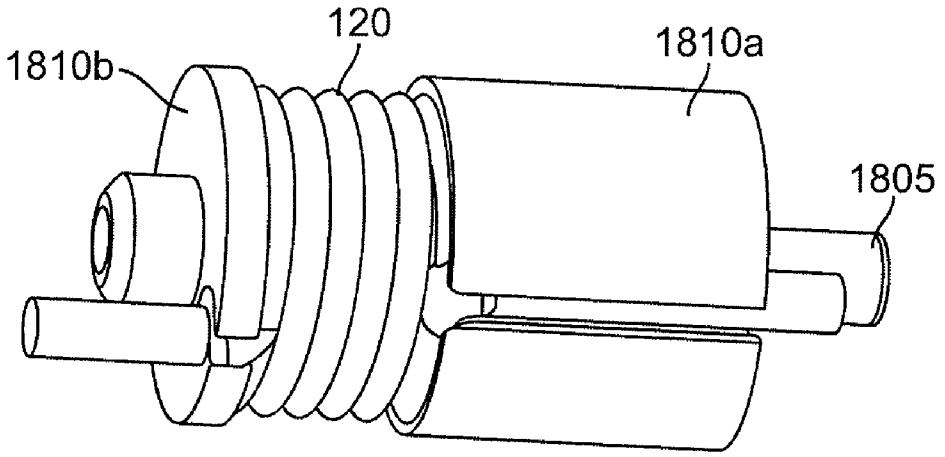

FIG. 17B

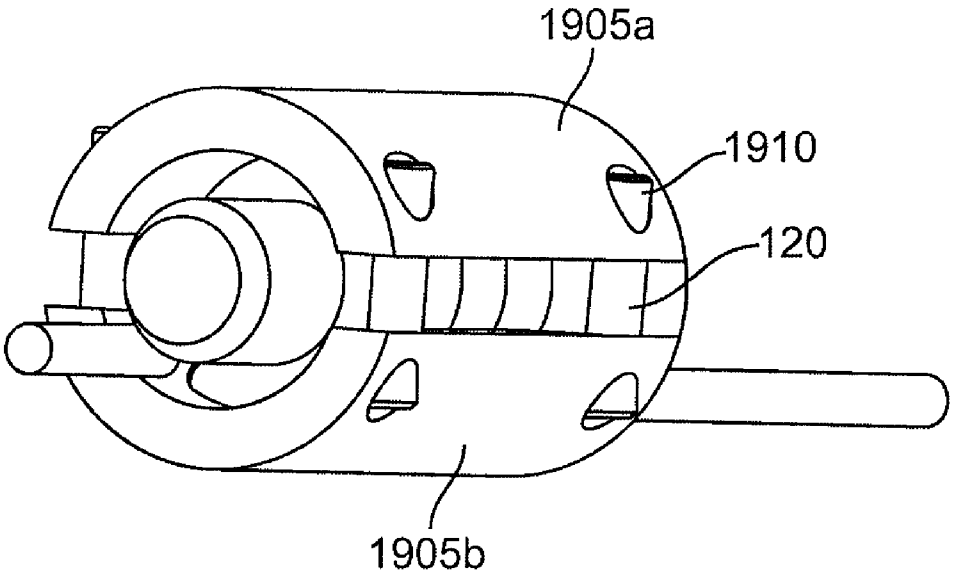

FIG. 18A

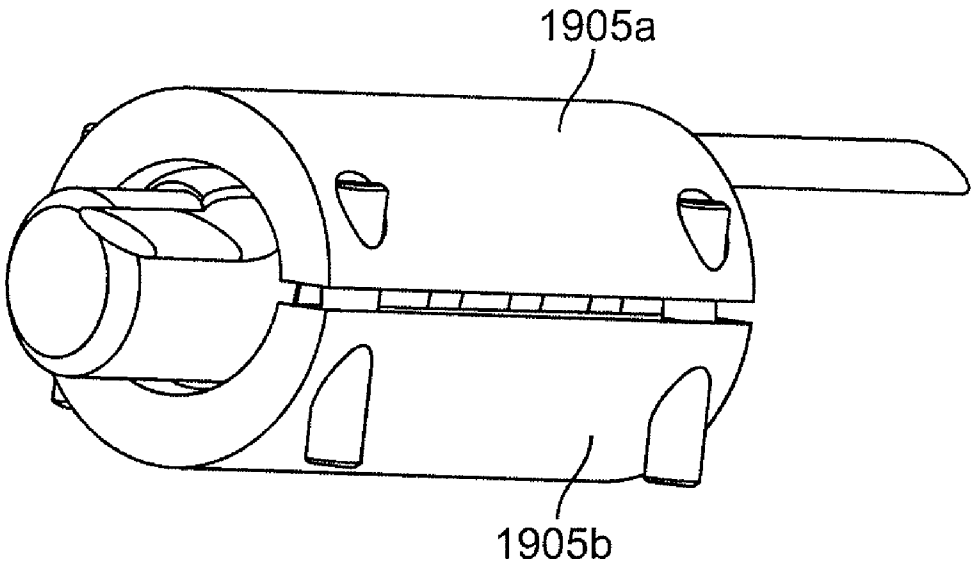

FIG. 18B

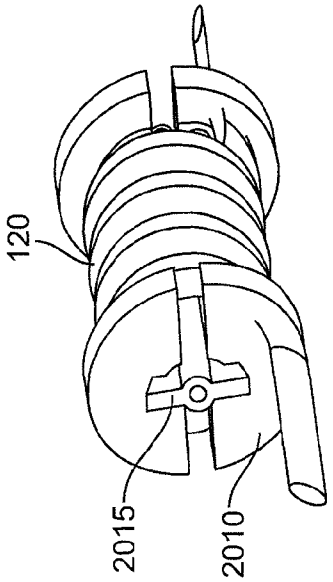

FIG. 19C

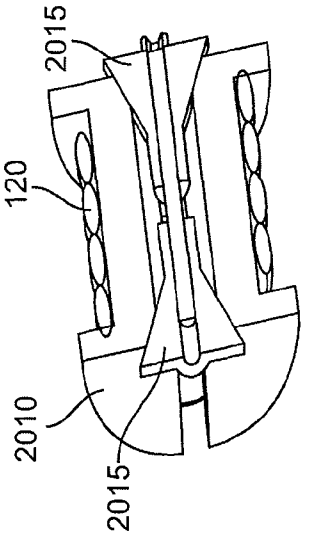

FIG. 19D

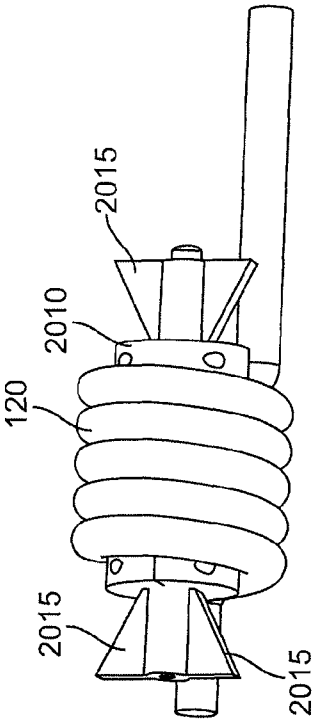

FIG. 19A

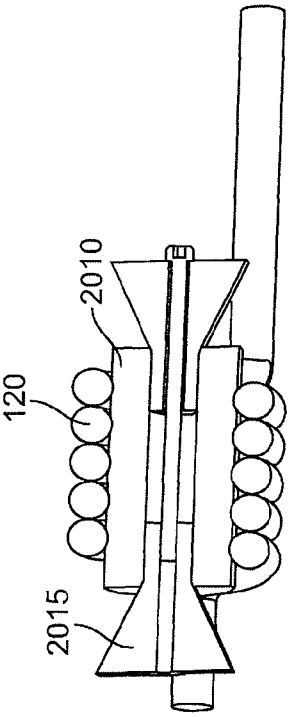

FIG. 19B

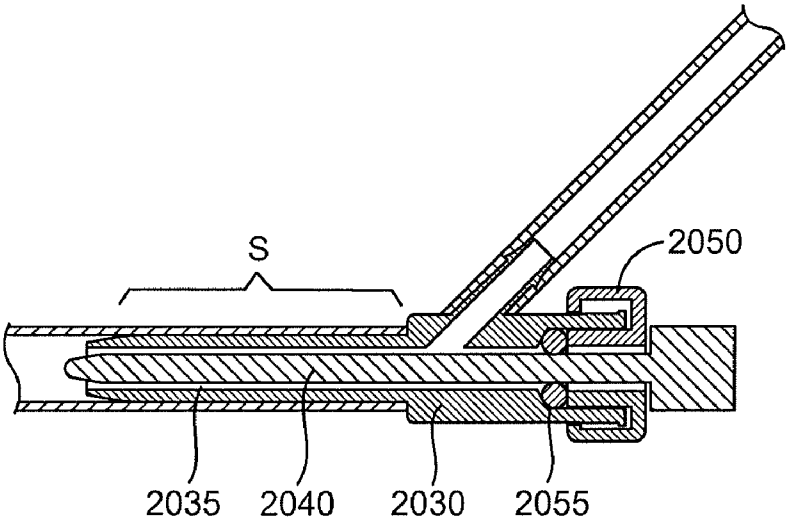

FIG. 20A

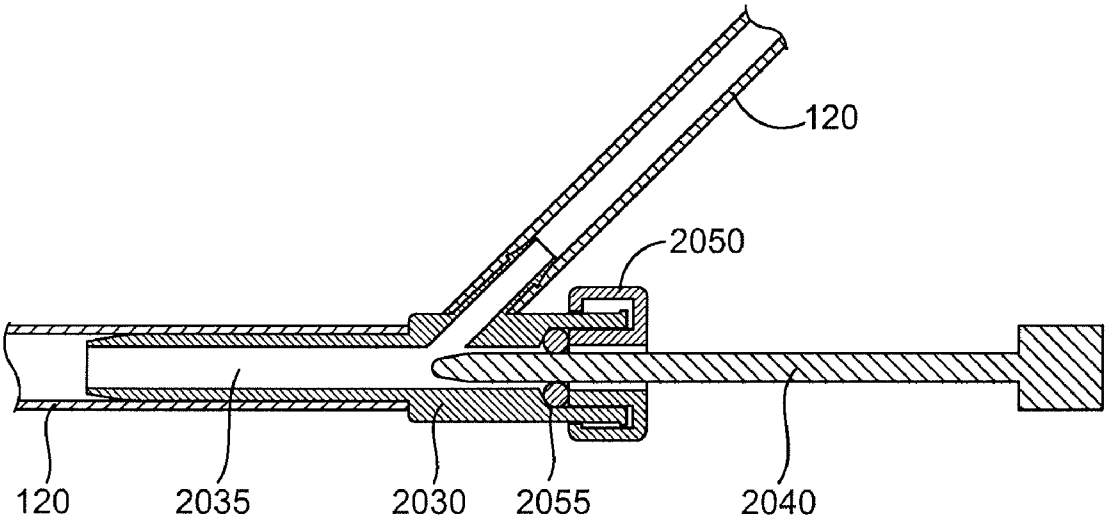

FIG. 20B

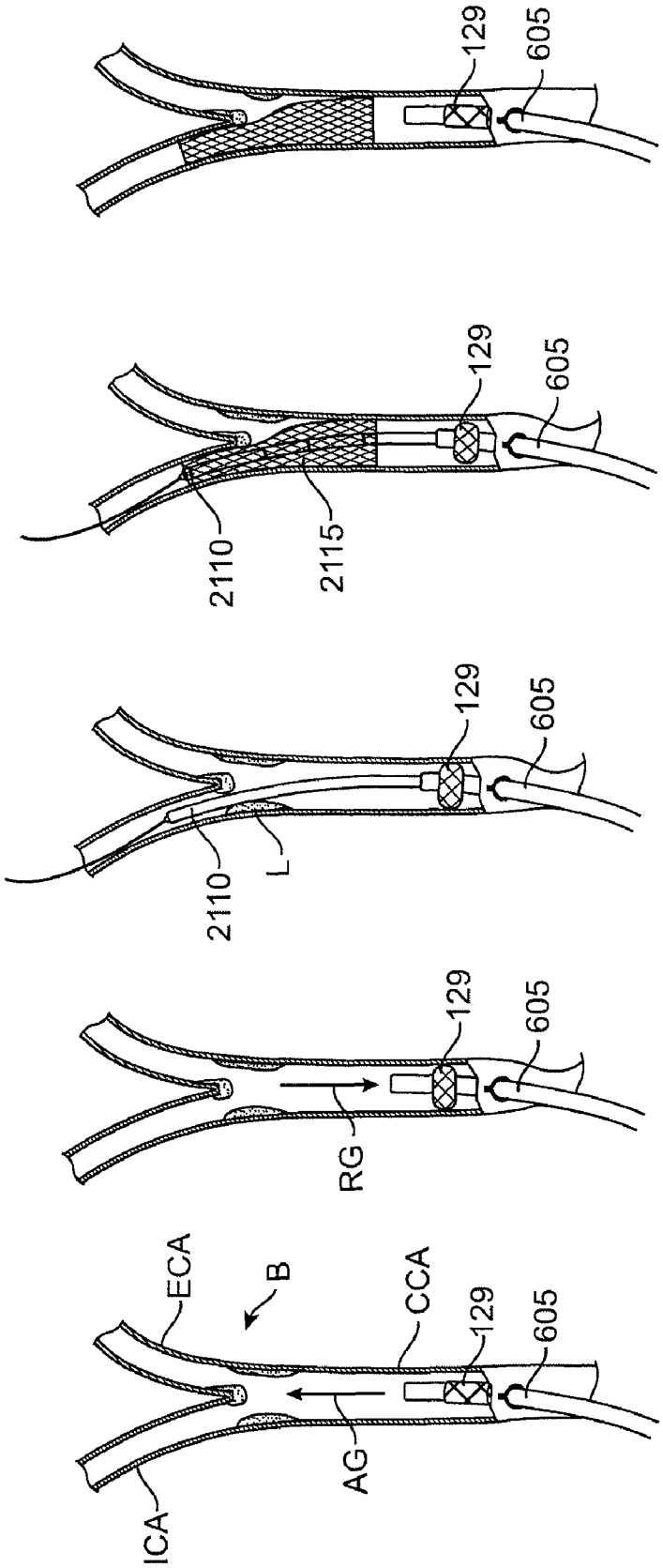

FIG. 21A

FIG. 21B

FIG. 21C

FIG. 21D

FIG. 21E

METHODS AND SYSTEMS FOR ESTABLISHING RETROGRADE CAROTID ARTERIAL BLOOD FLOW

REFERENCE TO PRIORITY DOCUMENT

This application claims priority of co pending U.S. Provisional Patent Application Ser. No. 60/950,384 filed on Jul. 18, 2007 and U.S. Provisional Patent Application Ser. No. 61/026,308 filed on Feb. 5, 2008. The disclosures of the Provisional Patent Applications are hereby incorporated by reference in their entirety.

BACKGROUND

The present disclosure relates generally to medical methods and devices. More particularly, the present disclosure relates to methods and systems for accessing the carotid arterial vasculature and establishing retrograde blood flow during performance of carotid artery stenting and other procedures.

Carotid artery disease usually consists of deposits of plaque P which narrow the junction between the common carotid artery CCA and the internal carotid artery ICA, an artery which provides blood flow to the brain (FIG. **5**). These deposits increase the risk of embolic particles being generated and entering the cerebral vasculature, leading to neurologic consequences such as transient ischemic attacks TIA, ischemic stroke, or death. In addition, should such narrowings become severe, blood flow to the brain is inhibited with serious and sometimes fatal consequences.

Two principal therapies are employed for treating carotid artery disease. The first is carotid endarterectomy CEA, an open surgical procedure which relies on occluding the common, internal and external carotid arteries, opening the carotid artery at the site of the disease (usually the carotid bifurcation where the common carotid artery CCA divides into the internal carotid artery ICA and external carotid artery ECA), dissecting away and removing the plaque P, and then closing the carotid artery. The second procedure relies on stenting of the carotid arteries, referred to as carotid artery stenting CAS, typically at or across the branch from the common carotid artery CAA into the internal carotid artery ICA, or entirely in the internal carotid artery. Usually, a self-expanding stent is introduced through percutaneous puncture into the femoral artery in the groin and up the aortic arch into the target common carotid artery CCA.

In both these approaches, the patient is at risk of emboli being released into the cerebral vasculature via the internal carotid artery ICA. The clinical consequence of emboli release into the external carotid artery ECA, an artery which provides blood to facial structures, is less significant. During CEA, the risk of emboli release into the internal carotid artery ICA is minimized by debriding and vigorously flushing the arteries before closing the vessels and restoring blood flow. During the procedure while the artery is opened, all the carotid arteries are occluded so particles are unable to enter the vasculature.

In carotid stenting CAS procedures, adjunct embolic protection devices are usually used to at least partially alleviate the risk of emboli. An example of these devices are distal filters, which are deployed in the internal carotid artery distal to the region of stenting. The filter is intended to capture the embolic particles to prevent passage into the cerebral vasculature. Such filtering devices, however, carry certain limitations. They must be advanced to the target vessel and cross the stenosis prior to deployment, which exposes the cerebral vascular to embolic showers; they are not always easy to

advance, deploy, and remove through a tight stenosis and/or a severely angulated vasculature; and finally, they only filter particles larger than the filter pore size, typically 100 to 120 μm. Also, these devices do not filter 100% of the flow due to incomplete wall opposition of the filter, and furthermore there is a risk of debris escape during filter retrieval.

Of particular interest to the present disclosure, an alternative method for reducing the risk of emboli release into the internal carotid artery ICA has been proposed for use during carotid stenting CAS procedures utilizing the concept of reversing the flow in the internal carotid artery ICA to prevent embolic debris entering the cerebral vasculature. Although a number of specific protocols have been described, they generally rely on placing a sheath via the femoral artery (transfemoral access) into the common carotid artery. Flow in the common carotid artery is occluded, typically by inflating a balloon on the distal tip of the sheath. Flow into the external carotid artery ECA may also be occluded, typically using a balloon catheter or balloon guidewire introduced through the sheath. The sheath is then connected to a venous location or to a low pressure external receptacle in order to establish a reverse or retrograde flow from the internal carotid artery through the sheath and away from the cerebral vasculature. After such reverse or retrograde flow is established, the stenting procedure may be performed with a greatly reduced risk of emboli entering the cerebral vasculature.

An alternate system which simply halts forward flow in the ICA consists of a carotid access sheath with two integral balloons: an ECA occlusion balloon at the distal tip, and a CCA occlusion balloon placed some fixed distance proximal to the ECA balloon. Between the two balloons is an opening for delivery of the interventional carotid stenting devices. This system does not reverse flow from the ICA to the venous system, but instead relies on blocking flow and performing aspiration to remove embolic debris prior to establishing forward flow in the ICA.

While such reverse or static flow protocols for performing stenting and other interventional procedures in the carotid vasculature hold great promise, such methods have generally required the manipulation of multiple separate access and occlusion components. Moreover, the protocols have been rather complicated, requiring many separate steps, limiting their performance to only the most skilled vascular surgeons, interventional radiologists and cardiologists. In addition, due to the size limitations of the femoral access, the access devices themselves provide a very high resistance to flow, limiting the amount of reverse flow and/or aspiration possible. Furthermore, the requirement to occlude the external carotid artery adds risk and complexity to the procedure. The balloon catheter for occluding the external carotid artery can become trapped in the arterial wall in cases where the stent is placed across the bifurcation from the common carotid artery to the internal carotid artery, and may cause damage to the deployed stent when it is removed.

None of the cerebral protection devices and methods described offer protection after the procedure. However, generation of embolic particles have been measured up to 48 hours or later, after the stent procedure. During CEA, flushing at the end of the procedure while blocking flow to the internal carotid artery ICA may help reduce post-procedure emboli generation. A similar flushing step during CAS may also reduce emboli risk. Additionally, a stent which is designed to improve entrapment of embolic particles may also reduce post-procedure emboli.

In addition, all currently available carotid stenting and cerebral protection systems are designed for access from the femoral artery. Unfortunately, the pathway from the femoral

artery to the common carotid artery is relatively long, has several turns which in some patients can be quite angulated, and often contains plaque and other diseases. The portion of the procedure involving access to the common carotid artery from the femoral artery can be difficult and time consuming as well as risk generating showers of embolic debris up both the target and the opposite common carotid artery and thence to the cerebral vasculature. Some studies suggest that up to half, or more, of embolic complications during CAS procedures occur during access to the CCA. None of the protocols or systems offer protection during this portion of the procedure.

Recently, a reverse flow protocol having an alternative access route to the carotid arteries has been proposed by Criado. This alternative route consists of direct surgical access to the common carotid artery CCA, called transcervical access. Transcervical access greatly shortens the length and tortuosity of the pathway from the vascular access point to the target treatment site thereby easing the time and difficulty of the procedure. Additionally, this access route reduces the risk of emboli generation from navigation of diseased, angulated, or tortuous aortic arch or common carotid artery anatomy.

The Criado protocol is described in several publications in the medical literature cited below. As shown in FIG. **3**, the Criado protocol uses a flow shunt which includes an arterial sheath **210** and a venous sheath **212**. Each sheath has a side arm **214**, terminating in a stopcock **216**. The two sheaths stopcocks are connected by a connector tubing **218**, thus completing a reverse flow shunt from the arterial sheath **210** to the venous sheath **212** The arterial sheath is placed in the common carotid artery CCA through an open surgical incision in the neck below the carotid bifurcation. Occlusion of the common carotid artery CCA is accomplished using a temporary vessel ligation, for example using a Rummel tourniquet and umbilical tape or vessel loop. The venous return sheath **212** is placed in the internal jugular vein IJV (FIG. **3**), also via an open surgical incision. Retrograde flow from the internal carotid artery ICA and the external carotid artery ECA may then be established by opening the stopcock **216**. The Criado protocol is an improvement over the earlier retrograde flow protocols since it eliminates the need for femoral access. Thus, the potential complications associated with the femoral access are completely avoided. Furthermore, the lower flow restrictions presented by the shorter access route offer the opportunity for more vigorous reverse flow rate, increasing the efficiency of embolic debris removal. Because of these reduced flow restrictions, the desired retrograde flow of the internal carotid artery ICA may be established without occluding the external carotid artery ECA, as required by the earlier protocols.

While a significant improvement over the femoral access-based retrograde flow protocols, the Criado protocol and flow shunt could still benefit from improvement. In particular, the existing arterial and venous sheaths used in the procedure still have significant flow restrictions in the side arms **214** and stopcocks **216**. When an interventional catheter is inserted into the arterial access sheath, the reverse flow circuit resistance is at a maximum. In some percentage of patients, the external carotid artery ECA perfusion pressure is greater than the internal carotid artery ICA perfusion pressure. In these patients, this differential pressure might drive antegrade flow into the ICA from the ECA. A reverse flow shunt with lower flow resistance could guarantee reversal of flow in both the ECA and ICA despite a pressure gradient from the ECA to the ICA.

In addition, there is no means to monitor or regulate the reverse flow rate. The ability to increase and/or modulate the flow rate would give the user the ability to set the reverse flow rate optimally to the tolerance and physiology of the patient and the stage of the procedure, and thus offer improved protection from embolic debris. Further, the system as described by Criado relies on manually turning one or more stopcocks to open and close the reverse flow shunt, for example during injection of contrast medium to facilitate placement of the CAS systems. Finally, the Criado protocol relies on open surgical occlusion of the common carotid artery, via a vessel loop or Rummel tourniquet. A system with means to occlude the common carotid artery intravascularly, for example with an occlusion element on the arterial access sheath, would allow the entire procedure to be performed using percutaneous techniques. A percutaneous approach would limit the size and associated complications of a surgical incision, as well as enable non-surgical physicians to perform the procedure.

For these reasons, it would be desirable to provide improved methods, apparatus, and systems for performing transcervical access, retrograde flow and flushing procedures and implantation of a carotid stent in the carotid arterial vasculature to reduce the risk of procedural and post-procedural emboli, to improve the level of hemostasis throughout the procedure, and to improve the ease and speed of carotid artery stenting. The methods, apparatus, and system should simplify the procedure to be performed by the physician as well as reduce the risk of improperly performing the procedures and/or achieving insufficient retrograde flow and flushing to protect against emboli release. The systems should provide individual devices and components which are readily used with each other and which protect against emboli-related complications. The methods and systems should also provide for convenient and preferably automatic closure of any and all arterial penetrations at the end of the procedure to prevent unintended blood loss. Additionally, the systems, apparatus, and methods should be suitable for performance by either open surgical or percutaneous access routes into the vasculature. Additionally, the methods, apparatus, and systems should enable implantation of an intravascular prosthetic implant which lowers post procedural complications. At least some of these objectives will be met by the inventions described herein below.

DESCRIPTION OF BACKGROUND ART

Methods and systems for inducing retrograde blood flow while performing interventional procedures in the carotid arteries are described in U.S. Pat. Nos. 6,413,235; 6,423,032; and 6,837,881 and printed publications US2001/0044598; 2002/0087119; and US2005/0154349. Literature publications relating to the transcervical access of the common carotid artery include: Bergeron P. et al. (1996) *J Endovasc Surg;* 3: 76-79; Diethrich E B et al. (1996) *J Endovasc Surg;* 3: 42-62; Diethrich E B et al (1996). *J Endovasc Surg;* 3: 182-202; Criado F J et al. (1997) *Am J Surg;* 174: 111-114; and Bergeron P. et al (1999). *J Endovasc Surg;* 6: 155-159. Literature relating to transcervical access with flow reversal include: Stecker M S et al. (2002), *J Vasc Interv Radiol* 2002; 13:413-417; Criado E et al. (2004) *Ann Vasc Surg.* 2004 March; 18(2):257-61; Chang D W et al. (2004) *J Vasc Surg.* 2004 May; 39(5):994-1002; Criado E et al. (2004) *J Vasc Surg.* 2004 July; 40(1):92-7; Criado E. et al. (2004) *J Vasc Surg* September; 40(3):476-83; Lo C H, Doblas M, Criado E. (2005) *J Cardiovasc Surg* (*Torino*). (2005) June; 46(3):229-39; Pipinos I L et al. (2005) *J Endovasc Ther. August;* 12(4): 446-53; Lin J C et al. (2005) *Vasc Endovascular Surg.*

November-December; 39(6):499-503; Alexandrescu V. et al. (2006) *J Endovasc Ther April;* 13(2):196-204; Ribo M et al. (2006) *Stroke*. November; 37(11):2846-9; Pipinos I L et al. (2006) *Vascular* September-October; 14(5):245-55; Matas M et al. (2007) *J Vasc Surg* July; 46(1):49-54.

SUMMARY

The disclosed methods, apparatus, and systems establish and facilitate retrograde or reverse flow blood circulation in the region of the carotid artery bifurcation in order to limit or prevent the release of emboli into the cerebral vasculature, particularly into the internal carotid artery. The methods are particularly useful for interventional procedures, such as stenting and angioplasty, atherectomy, performed through a transcervical approach or transfemoral into the common carotid artery, either using an open surgical technique or using a percutaneous technique, such as a modified Seldinger technique.

Access into the common carotid artery is established by placing a sheath or other tubular access cannula into a lumen of the artery, typically having a distal end of the sheath positioned proximal to the junction or bifurcation B (FIG. **5**) from the common carotid artery to the internal and external carotid arteries. The sheath may have an occlusion member at the distal end, for example a compliant occlusion balloon. A catheter or guidewire with an occlusion member, such as a balloon, may be placed through the access sheath and positioned in the proximal external carotid artery ECA to inhibit the entry of emboli, but occlusion of the external carotid artery is usually not necessary. A second return sheath is placed in the venous system, for example the internal jugular vein IJV or femoral vein FV. The arterial access and venous return sheaths are connected to create an external arterial-venous shunt.

Retrograde flow is established and modulated to meet the patient's requirements. Flow through the common carotid artery is occluded, either with an external vessel loop or tape, a vascular clamp, an internal occlusion member such as a balloon, or other type of occlusion means. When flow through the common carotid artery is blocked, the natural pressure gradient between the internal carotid artery and the venous system will cause blood to flow in a retrograde or reverse direction from the cerebral vasculature through the internal carotid artery and through the shunt into the venous system.

Alternately, the venous sheath could be eliminated and the arterial sheath could be connected to an external collection reservoir or receptacle. The reverse flow could be collected in this receptacle. If desired, the collected blood could be filtered and subsequently returned to the patient during or at the end of the procedure. The pressure of the receptacle could be open to zero pressure, causing the pressure gradient to create blood to flow in a reverse direction from the cerebral vasculature to the receptacle or the pressure of the receptacle could be a negative pressure.

Optionally, to achieve or enhance reverse flow from the internal carotid artery, flow from the external carotid artery may be blocked, typically by deploying a balloon or other occlusion element in the external carotid just above (i.e., distal) the bifurcation within the internal carotid artery.

Although the procedures and protocols described hereinafter will be particularly directed at carotid stenting, it will be appreciated that the methods for accessing the carotid artery described herein would also be useful for angioplasty, artherectomy, and any other interventional procedures which might be carried out in the carotid arterial system, particularly at a location near the bifurcation between the internal and external carotid arteries. In addition, it will be appreciated that some of these access, vascular closure, and embolic protection methods will be applicable in other vascular interventional procedures, for example the treatment of acute stroke.

The present disclosure includes a number of specific aspects for improving the performance of carotid artery access protocols. At least most of these individual aspects and improvements can be performed individually or in combination with one or more other of the improvements in order to facilitate and enhance the performance of the particular interventions in the carotid arterial system.

In one aspect, there is disclosed a system for use in accessing and treating a carotid artery, said system. The system comprises an arterial access device adapted to be introduced into a common carotid artery and receive blood flow from the common carotid artery; a shunt fluidly connected to the arterial access device, wherein the shunt provides a pathway for blood to flow from the arterial access device to a return site; and a flow control assembly coupled to the shunt and adapted to regulate blood flow through the shunt between at least a first blood flow state and at least a second blood flow state, wherein the flow control assembly includes one or more components that interact with the blood flow through the shunt.

In another aspect, there is disclosed a system for use in accessing and treating a carotid artery. The system comprises an arterial access device adapted to be introduced into a common carotid artery and receive blood flow from the common carotid artery; a shunt fluidly connected to the arterial access device, wherein the shunt provides a pathway for blood to flow from the arterial access device to a return site; a flow mechanism coupled to the shunt and adapted to vary the blood flow through the shunt between a first blood flow rate and a second blood flow rate; and a controller that automatically interacts with the flow mechanism to regulate blood flow through the shunt between the first blood flow rate and the second blood flow rate without requiring input from a user.

In another aspect, there is disclosed a device for use in accessing and treating a carotid artery. The device comprises a distal sheath having a distal end adapted to be introduced into the common carotid artery, a proximal end, and a lumen extending between the distal and proximal ends; a proximal extension having a distal end, a proximal end, and a lumen therebetween, wherein the distal end of the proximal extension is connected to the proximal end of the sheath at a junction so that the lumens of each are contiguous; a flow line having a lumen, said flow line connected near the junction so that blood flowing into the distal end of the sheath can flow into the lumen of the flow line; and a hemostasis valve at the proximal end of the proximal extension, said hemostasis valve being adapted to inhibit blood flow from the proximal extension while allowing catheter introduction through the proximal extension and into the distal sheath.

In another aspect, there is disclosed a method for accessing and treating a carotid artery. The method comprises forming a penetration in a wall of a common carotid artery; positioning an access sheath through the penetration; blocking blood flow from the common carotid artery past the sheath; allowing retrograde blood flow from the carotid artery into the sheath and from the sheath via a flow path to a return site; and modifying blood flow through the flow path based on feedback data.

In another aspect, there is disclosed a method for accessing and treating a carotid artery. The method comprises forming a penetration in a wall of a common carotid artery; positioning an access sheath through the penetration; blocking blood

flow from the common carotid artery past the sheath; allowing retrograde blood flow from the carotid artery into the sheath and from the sheath via a flow path to a return site; and monitoring flow through the flow path.

In another aspect, there is disclosed a method for accessing and treating a carotid artery. The method comprises: forming a penetration in a wall of a common carotid artery; positioning an arterial access sheath through the penetration; blocking blood flow from the common carotid artery past the sheath; allowing retrograde blood flow from the internal carotid artery into the sheath while the common carotid artery remains blocked; and adjusting the state of retrograde blood flow through the sheath.

In another aspect, there is disclosed a method for accessing and treating a carotid artery. The method comprises forming a penetration in a wall of a common carotid artery; positioning an arterial access sheath through the penetration; blocking blood flow from the common carotid artery past the sheath; allowing retrograde blood flow from the internal carotid artery into the sheath while the common carotid artery remains blocked; and adjusting a rate of retrograde blood flow from the sheath to as high a level as the patient will tolerate, wherein said adjusted rate is a baseline.

Other features and advantages should be apparent from the following description of various embodiments, which illustrate, by way of example, the principles of the invention.

BRIEF DESCRIPTION OF THE DRAWINGS

FIG. **1**A is a schematic illustration of a retrograde blood flow system including a flow control assembly wherein an arterial access device accesses the common carotid artery via a transcervical approach and a venous return device communicates with the internal jugular vein.

FIG. **1**B is a schematic illustration of a retrograde blood flow system wherein an arterial access device accesses the common carotid artery via a transcervical approach and a venous return device communicates with the femoral vein.

FIG. **1**C is a schematic illustration of a retrograde blood flow system wherein an arterial access device accesses the common carotid artery via a transfemoral approach and a venous return device communicates with the femoral vein.

FIG. **1**D is a schematic illustration of a retrograde blood flow system wherein retrograde flow is collected in an external receptacle.

FIG. **2**A is an enlarged view of the carotid artery wherein the carotid artery is occluded and connected to a reverse flow shunt, and an interventional device, such as a stent delivery system or other working catheter, is introduced into the carotid artery via an arterial access device.

FIG. **2**B is an alternate system wherein the carotid artery is connected to a reverse flow shunt and an interventional device, such as a stent delivery system or other working catheter, is introduced into the carotid artery via an arterial access device, and the carotid artery is occluded with a separate occlusion device.

FIG. **2**C is an alternate system wherein the carotid artery is occluded and the artery is connected to a reverse flow shunt via an arterial access device and the interventional device, such as a stent delivery system, is introduced into the carotid artery via an arterial introducer device.

FIG. **3** illustrates a prior art Criado flow shunt system.

FIG. **4** illustrates a normal cerebral circulation diagram including the Circle of Willis.

FIG. **5** illustrates the vasculature in a patient's neck, including the common carotid artery CCA, the internal carotid artery ICA, the external carotid artery ECA, and the internal jugular vein IJV.

FIG. **6**A illustrates an arterial access device useful in the methods and systems of the present disclosure.

FIG. **6**B illustrates an additional arterial access device construction with a reduced diameter distal end.

FIGS. **7**A and **7**B illustrate a tube useful with the sheath of FIG. **6**A.

FIG. **8**A illustrates an additional arterial access device construction with an expandable occlusion element.

FIG. **8**B illustrates an additional arterial access device construction with an expandable occlusion element and a reduced diameter distal end.

FIG. **9** illustrates a first embodiment of a venous return device useful in the methods and systems of the present disclosure.

FIG. **10** illustrates an alternative venous return device useful in the methods and systems of the present disclosure.

FIG. **11** illustrates the system of FIG. **1** including a flow control assembly.

FIG. **12**A-**12**D, FIGS. **13**A-**13**D, FIGS. **14**A and **14**B, FIGS. **15**A-**15**D, and FIGS. **16**A and **16**B, illustrate different embodiments of a variable flow resistance component useful in the methods and systems of the present disclosure.

FIGS. **17**A-**17**B, FIGS. **18**A-**18**B, FIGS. **19**A-**19**D, and FIGS. **20**A-**20**B illustrate further embodiments of a variable flow resistance system useful in the methods and systems of the present disclosure.

FIGS. **21**A-**21**E illustrate the exemplary blood flow paths during a procedure for implanting a stent at the carotid bifurcation in accordance with the principles of the present disclosure.

DETAILED DESCRIPTION

FIG. **1**A shows a first embodiment of a retrograde flow system **100** that is adapted to establish and facilitate retrograde or reverse flow blood circulation in the region of the carotid artery bifurcation in order to limit or prevent the release of emboli into the cerebral vasculature, particularly into the internal carotid artery. The system **100** interacts with the carotid artery to provide retrograde flow from the carotid artery to a venous return site, such as the internal jugular vein (or to another return site such as another large vein or an external receptacle in alternate embodiments.) The retrograde flow system **100** includes an arterial access device **110**, a venous return device **115**, and a shunt **120** that provides a passageway for retrograde flow from the arterial access device **110** to the venous return device **115**. A flow control assembly **125** interacts with the shunt **120**. The flow control assembly **125** is adapted to regulate and/or monitor the retrograde flow from the common carotid artery to the internal jugular vein, as described in more detail below. The flow control assembly **125** interacts with the flow pathway through the shunt **120**, either external to the flow path, inside the flow path, or both. The arterial access device **110** at least partially inserts into the common carotid artery CCA and the venous return device **115** at least partially inserts into a venous return site such as the internal jugular vein IJV, as described in more detail below. The arterial access device **110** and the venous return device **115** couple to the shunt **120** at connection locations **127***a* and **127***b*. When flow through the common carotid artery is blocked, the natural pressure gradient between the internal carotid artery and the venous system causes blood to flow in a retrograde or reverse direction RG (FIG. **2**A) from

the cerebral vasculature through the internal carotid artery and through the shunt **120** into the venous system. The flow control assembly **125** modulates, augments, assists, monitors, and/or otherwise regulates the retrograde blood flow.

In the embodiment of FIG. **1**A, the arterial access device **110** accesses the common carotid artery CCA via a transcervical approach. Transcervical access provides a short length and non-tortuous pathway from the vascular access point to the target treatment site thereby easing the time and difficulty of the procedure, compared for example to a transfemoral approach. Additionally, this access route reduces the risk of emboli generation from navigation of diseased, angulated, or tortuous aortic arch or common carotid artery anatomy. At least a portion of the venous return device **115** is placed in the internal jugular vein IJV. In an embodiment, transcervical access to the common carotid artery is achieved percutaneously via an incision or puncture in the skin through which the arterial access device **110** is inserted. If an incision is used, then the incision can be about 0.5 cm in length. An occlusion element **129**, such as an expandable balloon, can be used to occlude the common carotid artery CCA at a location proximal of the distal end of the arterial access device **110**. The occlusion element **129** can be located on the arterial access device **110** or it can be located on a separate device. In an alternate embodiment, the arterial access device **110** accesses the common carotid artery CCA via a direct surgical transcervical approach. In the surgical approach, the common carotid artery can be occluded using a tourniquet **2105**. The tourniquet **2105** is shown in phantom to indicate that it is a device that is used in the optional surgical approach.

In another embodiment, shown in FIG. **11**B, the arterial access device **110** accesses the common carotid artery CCA via a transcervical approach while the venous return device **115** access a venous return site other than the jugular vein, such as a venous return site comprised of the femoral vein FV. The venous return device **115** can be inserted into a central vein such as the femoral vein FV via a percutaneous puncture in the groin.

In another embodiment, shown in FIG. **1**C, the arterial access device **110** accesses the common carotid artery via a femoral approach. According to the femoral approach, the arterial access device **110** approaches the CCA via a percutaneous puncture into the femoral artery FA, such as in the groin, and up the aortic arch AA into the target common carotid artery CCA. The venous return device **115** can communicate with the jugular vein JV or the femoral vein FV.

FIG. **1**D shows yet another embodiment, wherein the system provides retrograde flow from the carotid artery to an external receptacle **130** rather than to a venous return site. The arterial access device **110** connects to the receptacle **130** via the shunt **120**, which communicates with the flow control assembly **125**. The retrograde flow of blood is collected in the receptacle **130**. If desired, the blood could be filtered and subsequently returned to the patient. The pressure of the receptacle **130** could be set at zero pressure (atmospheric pressure) or even lower, causing the blood to flow in a reverse direction from the cerebral vasculature to the receptacle **130**. Optionally, to achieve or enhance reverse flow from the internal carotid artery, flow from the external carotid artery can be blocked, typically by deploying a balloon or other occlusion element in the external carotid artery just above the bifurcation with the internal carotid artery. FIG. **1**D shows the arterial access device **110** arranged in a transcervical approach with the CCA although it should be appreciated that the use of the external receptacle **130** can also be used with the arterial access device **110** in a transfemoral approach.

With reference to the enlarged view of the carotid artery in FIG. **2**A, an interventional device, such as a stent delivery system **135** or other working catheter, can be introduced into the carotid artery via the arterial access device **110**, as described in detail below. The stent delivery system **135** can be used to treat the plaque P such as to deploy a stent into the carotid artery. The arrow RG in FIG. **2**A represents the direction of retrograde flow.

FIG. **2**B shows another embodiment, wherein the arterial access device **110** is used for the purpose of creating an arterial-to-venous shunt as well as introduction of at least one interventional device into the carotid artery. A separate arterial occlusion device **112** with an occlusion element **129** can be used to occlude the common carotid artery CCA at a location proximal to the distal end of the arterial access device **110**.

FIG. **2**C shows yet another embodiment wherein the arterial access device **110** is used for the purpose of creating an arterial-to-venous shunt as well as arterial occlusion using an occlusion element **129**. A separate arterial introducer device can be used for the introduction of at least one interventional device into the carotid artery at a location distal to the arterial access device **110**.

Description Of Anatomy

Collateral Brain Circulation

The Circle of Willis CW is the main arterial anastomatic trunk of the brain where all major arteries which supply the brain, namely the two internal carotid arteries (ICAs) and the vertebral basilar system, connect. The blood is carried from the Circle of Willis by the anterior, middle and posterior cerebral arteries to the brain. This communication between arteries makes collateral circulation through the brain possible. Blood flow through alternate routes is made possible thereby providing a safety mechanism in case of blockage to one or more vessels providing blood to the brain. The brain can continue receiving adequate blood supply in most instances even when there is a blockage somewhere in the arterial system (e.g., when the ICA is ligated as described herein). Flow through the Circle of Willis ensures adequate cerebral blood flow by numerous pathways that redistribute blood to the deprived side.

The collateral potential of the Circle of Willis is believed to be dependent on the presence and size of its component vessels. It should be appreciated that considerable anatomic variation between individuals can exist in these vessels and that many of the involved vessels may be diseased. For example, some people lack one of the communicating arteries. If a blockage develops in such people, collateral circulation is compromised resulting in an ischemic event and potentially brain damage. In addition, an autoregulatory response to decreased perfusion pressure can include enlargement of the collateral arteries, such as the communicating arteries, in the Circle of Willis. An adjustment time is occasionally required for this compensation mechanism before collateral circulation can reach a level that supports normal function. This autoregulatory response can occur over the space of 15 to 30 seconds and can only compensate within a certain range of pressure and flow drop. Thus, it is possible for a transient ischemic attack to occur during the adjustment period. Very high retrograde flow rate for an extended period of time can lead to conditions where the patient's brain is not getting enough blood flow, leading to patient intolerance as exhibited by neurologic symptoms or in some cases a transient ischemic attack.

FIG. **4** depicts a normal cerebral circulation and formation of Circle of Willis CW. The aorta AO gives rise to the brachiocephalic artery BCA, which branches into the left com-

mon carotid artery LCCA and left subclavian artery LSCA. The aorta AO further gives rise to the right common carotid artery RCCA and right subclavian artery RSCA. The left and right common carotid arteries CCA gives rise to internal carotid arteries ICA which branch into the middle cerebral arteries MCA, posterior communicating artery PcoA, and anterior cerebral artery ACA. The anterior cerebral arteries ACA deliver blood to some parts of the frontal lobe and the corpus striatum. The middle cerebral arteries MCA are large arteries that have tree-like branches that bring blood to the entire lateral aspect of each hemisphere of the brain. The left and right posterior cerebral arteries PCA arise from the basilar artery BA and deliver blood to the posterior portion of the brain (the occipital lobe).

Anteriorly, the Circle of Willis is formed by the anterior cerebral arteries ACA and the anterior communicating artery ACoA which connects the two ACAs. The two posterior communicating arteries PCoA connect the Circle of Willis to the two posterior cerebral arteries PCA, which branch from the basilar artery BA and complete the Circle posteriorly.

The common carotid artery CCA also gives rise to external carotid artery ECA, which branches extensively to supply most of the structures of the head except the brain and the contents of the orbit. The ECA also helps supply structures in the neck and face.

Carotid Artery Bifurcation

FIG. **5** shows an enlarged view of the relevant vasculature in the patient's neck. The common carotid artery CCA branches at bifurcation B into the internal carotid artery ICA and the external carotid artery ECA. The bifurcation is located at approximately the level of the fourth cervical vertebra. FIG. **5** shows plaque P formed at the bifurcation B.

As discussed above, the arterial access device **110** can access the common carotid artery CCA via a transcervical approach. Pursuant to the transcervical approach, the arterial access device **110** is inserted into the common carotid artery CCA at an arterial access location L, which can be, for example, a surgical incision or puncture in the wall of the common carotid artery CCA. There is typically a distance D of around 5 to 7 cm between the arterial access location L and the bifurcation B. When the arterial access device **110** is inserted into the common carotid artery CCA, it is undesirable for the distal tip of the arterial access device **110** to contact the bifurcation B as this could disrupt the plaque P and cause generation of embolic particles. In order to minimize the likelihood of the arterial access device **110** contacting the bifurcation B, in an embodiment only about 2-4 cm of the distal region of the arterial access device is inserted into the common carotid artery CCA during a procedure.

The common carotid arteries are encased on each side in a layer of fascia called the carotid sheath. This sheath also envelops the internal jugular vein and the vagus nerve. Anterior to the sheath is the sternocleidomastoid muscle. Transcervical access to the common carotid artery and internal jugular vein, either percutaneous or surgical, can be made immediately superior to the clavicle, between the two heads of the sternocleidomastoid muscle and through the carotid sheath, with care taken to avoid the vagus nerve.

At the upper end of this sheath, the common carotid artery bifurcates into the internal and external carotid arteries. The internal carotid artery continues upward without branching until it enters the skull to supply blood to the retina and brain. The external carotid artery branches to supply blood to the scalp, facial, ocular, and other superficial structures. Intertwined both anterior and posterior to the arteries are several facial and cranial nerves. Additional neck muscles may also overlay the bifurcation. These nerve and muscle structures can be dissected and pushed aside to access the carotid bifurcation during a carotid endarterectomy procedure. In some cases the carotid bifurcation is closer to the level of the mandible, where access is more challenging and with less room available to separate it from the various nerves which should be spared. In these instances, the risk of inadvertent nerve injury can increase and an open endarterectomy procedure may not be a good option.

Detailed Description of Retrograde Blood Flow System

As discussed, the retrograde flow system **100** includes the arterial access device **110**, venous return device **115**, and shunt **120** which provides a passageway for retrograde flow from the arterial access device **110** to the venous return device **115**. The system also includes the flow control assembly **125**, which interacts with the shunt **120** to regulate and/or monitor retrograde blood flow through the shunt **120**. Exemplary embodiments of the components of the retrograde flow system **100** are now described.

Arterial Access Device

FIG. **6**A shows an exemplary embodiment of the arterial access device **110**, which comprises a distal sheath **605**, a proximal extension **610**, a flow line **615**, an adaptor or Y-connector **620**, and a hemostasis valve **625**. The distal sheath **605** is adapted to be introduced through an incision or puncture in a wall of a common carotid artery, either an open surgical incision or a percutaneous puncture established, for example, using the Seldinger technique. The length of the sheath can be in the range from 5 to 15 cm, usually being from 10 cm to 12 cm. The inner diameter is typically in the range from 7 Fr (1 Fr=0.33 mm), to 10 Fr, usually being 8 Fr. Particularly when the sheath is being introduced through the transcervical approach, above the clavicle but below the carotid bifurcation, it is desirable that the sheath **605** be highly flexible while retaining hoop strength to resist kinking and buckling. Thus, the distal sheath **605** can be circumferentially reinforced, such as by braid, helical ribbon, helical wire, or the like. In an alternate embodiment, the distal sheath is adapted to be introduced through a percutaneous puncture into the femoral artery, such as in the groin, and up the aortic arch AA into the target common carotid artery CCA

The distal sheath **605** can have a stepped or other configuration having a reduced diameter distal region **630**, as shown in FIG. **6**B, which shows an enlarged view of the distal region **630** of the sheath **605**. The distal region **630** of the sheath can be sized for insertion into the carotid artery, typically having an inner diameter in the range from 2.16 mm (0.085 inch) to 2.92 mm (0.115 inch) with the remaining proximal region of the sheath having larger outside and luminal diameters, with the inner diameter typically being in the range from 2.794 mm (0.110 inch) to 3.43 mm (0.135 inch). The larger luminal diameter of the proximal region minimizes the overall flow resistance of the sheath. In an embodiment, the reduced-diameter distal section **630** has a length of approximately 2 cm to 4 cm. The relatively short length of the reduced-diameter distal section **630** permits this section to be positioned in the common carotid artery CCA via the transcervical approach with reduced risk that the distal end of the sheath **605** will contact the bifurcation B. Moreover, the reduced diameter section **630** also permits a reduction in size of the arteriotomy for introducing the sheath **605** into the artery while having a minimal impact in the level of flow resistance.

With reference again to FIG. **6**A, the proximal extension **610** has an inner lumen which is contiguous with an inner lumen of the sheath **605**. The lumens can be joined by the Y-connector **620** which also connects a lumen of the flow line **615** to the sheath. In the assembled system, the flow line **615** connects to and forms a first leg of the retrograde shunt **120**

(FIG. **1**). The proximal extension **610** can have a length sufficient to space the hemostasis valve **625** well away from the Y-connector **620**, which is adjacent to the percutaneous or surgical insertion site. By spacing the hemostasis valve **625** away from a percutaneous insertion site, the physician can introduce a stent delivery system or other working catheter into the proximal extension **610** and sheath **605** while staying out of the fluoroscopic field when fluoroscopy is being performed.

A flush line **635** can be connected to the side of the hemostasis valve **625** and can have a stopcock **640** at its proximal or remote end. The flush-line **635** allows for the introduction of saline, contrast fluid, or the like, during the procedures. The flush line **635** can also allow pressure monitoring during the procedure. A dilator **645** having a tapered distal end **650** can be provided to facilitate introduction of the distal sheath **605** into the common carotid artery. The dilator **645** can be introduced through the hemostasis valve **625** so that the tapered distal end **650** extends through the distal end of the sheath **605**, as best seen in FIG. **7**A. The dilator **645** can have a central lumen to accommodate a guide wire. Typically, the guide wire is placed first into the vessel, and the dilator/sheath combination travels over the guide wire as it is being introduced into the vessel.

Optionally, a tube **705** may be provided which is coaxially received over the exterior of the distal sheath **605**, also as seen in FIG. **7**A. The tube **705** has a flared proximal end **710** which engages the adapter **620** and a distal end **715**. Optionally, the distal end **715** may be beveled, as shown in FIG. **7**B. The tube **705** may serve at least two purposes. First, the length of the tube **705** limits the introduction of the sheath **605** to the exposed distal portion of the sheath **605**, as seen in FIG. **7**A. Second, the tube **705** can engage a pre-deployed puncture closure device disposed in the carotid artery wall, if present, to permit the sheath **605** to be withdrawn without dislodging the closure device.

The distal sheath **605** can be configured to establish a curved transition from a generally anterior-posterior approach over the common carotid artery to a generally axial luminal direction within the common carotid artery. The transition in direction is particularly useful when a percutaneous access is provided through the common carotid wall. While an open surgical access may allow for some distance in which to angle a straight sheath into the lumen of the common carotid artery, percutaneous access will generally be in a normal or perpendicular direction relative to the access of the lumen, and in such cases, a sheath that can flex or turn at an angle will find great use.

The sheath **605** can be formed in a variety of ways. For example, the sheath **605** can be pre-shaped to have a curve or an angle some set distance from the tip, typically 2 to 3 cm. The pre-shaped curve or angle can typically provide for a turn in the range from 20° to 90°, preferably from 30° to 70°. For initial introduction, the sheath **605** can be straightened with an obturator or other straight or shaped instrument such as the dilator **645** placed into its lumen. After the sheath **605** has been at least partially introduced through the percutaneous or other arterial wall penetration, the obturator can be withdrawn to allow the sheath **605** to reassume its pre-shaped configuration into the arterial lumen.

Other sheath configurations include having a deflection mechanism such that the sheath can be placed and the catheter can be deflected in situ to the desired deployment angle. In still other configurations, the catheter has a non-rigid configuration when placed into the lumen of the common carotid artery. Once in place, a pull wire or other stiffening mechanism can be deployed in order to shape and stiffen the sheath into its desired configuration. One particular example of such a mechanism is commonly known as "shape-lock" mechanisms as well described in medical and patent literature.

Another sheath configuration comprises a curved dilator inserted into a straight but flexible sheath, so that the dilator and sheath are curved during insertion. The sheath is flexible enough to conform to the anatomy after dilator removal.

In an embodiment, the sheath has built-in puncturing capability and atraumatic tip analogous to a guide wire tip. This eliminates the need for needle and wire exchange currently used for arterial access according to the micropuncture technique, and can thus save time, reduce blood loss, and require less surgeon skill.

FIG. **8**A shows another embodiment of the arterial access device **110**. This embodiment is substantially the same as the embodiment shown in FIG. **6**A, except that the distal sheath **605** includes an occlusion element **129** for occluding flow through, for example the common carotid artery. If the occluding element **129** is an inflatable structure such as a balloon or the like, the sheath **605** can include an inflation lumen that communicates with the occlusion element **129**. The occlusion element **129** can be an inflatable balloon, but it could also be an inflatable cuff, a conical or other circumferential element which flares outwardly to engage the interior wall of the common carotid artery to block flow therepast, a membrane-covered braid, a slotted tube that radially enlarges when axially compressed, or similar structure which can be deployed by mechanical means, or the like. In the case of balloon occlusion, the balloon can be compliant, non-compliant, elastomeric, reinforced, or have a variety of other characteristics. In an embodiment, the balloon is an elastomeric balloon which is closely received over the exterior of the distal end of the sheath prior to inflation. When inflated, the elastomeric balloon can expand and conform to the inner wall of the common carotid artery. In an embodiment, the elastomeric balloon is able to expand to a diameter at least twice that of the non-deployed configuration, frequently being able to be deployed to a diameter at least three times that of the undeployed configuration, more preferably being at least four times that of the undeployed configuration, or larger.

As shown in FIG. **8**B, the distal sheath **605** with the occlusion element **129** can have a stepped or other configuration having a reduced diameter distal region **630**. The distal region **630** can be sized for insertion into the carotid artery with the remaining proximal region of the sheath **605** having larger outside and luminal diameters, with the inner diameter typically being in the range from 2.794 mm (0.110 inch) to 3.43 mm (0.135 inch). The larger luminal diameter of the proximal region minimizes the overall flow resistance of the sheath. In an embodiment, the reduced-diameter distal section **630** has a length of approximately 2 cm to 4 cm. The relatively short length of the reduced-diameter distal section **630** permits this section to be positioned in the common carotid artery CCA via the transcervical approach with reduced risk that the distal end of the sheath **605** will contact the bifurcation B.

FIG. **2**B shows an alternative embodiment, wherein the occlusion element **129** can be introduced into the carotid artery on a second sheath **112** separate from the distal sheath **605** of the arterial access device **110**. The second or "proximal" sheath **112** can be adapted for insertion into the common carotid artery in a proximal or "downward" direction away from the cerebral vasculature. The second, proximal sheath can include an inflatable balloon **129** or other occlusion element, generally as described above. The distal sheath **605** of the arterial access device **110** can be then placed into the common carotid artery distal of the second, proximal sheath

and generally oriented in a distal direction toward the cerebral vasculature. By using separate occlusion and access sheaths, the size of the arteriotomy needed for introducing the access sheath can be reduced.

FIG. **2**C shows yet another embodiment of a two arterial sheath system, wherein the interventional devices are introduced via an introducer sheath **114** separate from the distal sheath **605** of the arterial device **110**. A second or "distal" sheath **114** can be adapted for insertion into the common carotid artery distal to the arterial access device **110**. As with the previous embodiment, the use of two separate access sheaths allows the size of each arteriotomy to be reduced.

Venous Return Device

Referring now to FIG. **9**, the venous return device **115** can comprise a distal sheath **910** and a flow line **915**, which connects to and forms a leg of the shunt **120** when the system is in use. The distal sheath **910** is adapted to be introduced through an incision or puncture into a venous return location, such as the jugular vein or femoral vein. The distal sheath **910** and flow line **915** can be permanently affixed, or can be attached using a conventional luer fitting, as shown in FIG. **9**. Optionally, as shown in FIG. **10**, the sheath **910** can be joined to the flow line **915** by a Y-connector **1005**. The Y-connector **1005** can include a hemostasis valve **1010**, permitting insertion of a dilator **1015** to facilitate introduction of the venous return device into the internal jugular vein or other vein. As with the arterial access dilator **645**, the venous dilator **1015** includes a central guide wire lumen so the venous sheath and dilator combination can be placed over a guide wire. Optionally, the venous sheath **910** can include a flush line **1020** with a stopcock **1025** at its proximal or remote end.

In order to reduce the overall system flow resistance, the arterial access flow line **615** (FIG. **6**A) and the venous return flow line **915**, and Y-connectors **620** (FIG. **6**A) and **1005**, can each have a relatively large flow lumen inner diameter, typically being in the range from 2.54 mm (0.100 inch) to 5.08 mm (0.200 inch), and a relatively short length, typically being in the range from 10 cm to 20 cm. The low system flow resistance is desirable since it permits the flow to be maximized during portions of a procedure when the risk of emboli is at its greatest. The low system flow resistance also allows the use of a variable flow resistance for controlling flow in the system, as described in more detail below. The dimensions of the venous return sheath **910** can be generally the same as those described for the arterial access sheath **605** above. In the venous return sheath, an extension for the hemostasis valve **1010** is not required.

Retrograde Shunt

The shunt **120** can be formed of a single tube or multiple, connected tubes that provide fluid communication between the arterial access catheter **110** and the venous return catheter **115** to provide a pathway for retrograde blood flow therebetween. As shown in FIG. **1**A, the shunt **120** connects at one end (via connector **127***a*) to the flow line **615** of the arterial access device **110**, and at an opposite end (via connector **127***b*) to the flow line **915** of the venous return catheter **115**.

In an embodiment, the shunt **120** can be formed of at least one tube that communicates with the flow control assembly **125**. The shunt **120** can be any structure that provides a fluid pathway for blood flow. The shunt **120** can have a single lumen or it can have multiple lumens. The shunt **120** can be removably attached to the flow control assembly **125**, arterial access device **110**, and/or venous return device **115**. Prior to use, the user can select a shunt **120** with a length that is most appropriate for use with the arterial access location and venous return location. In an embodiment, the shunt **120** can include one or more extension tubes that can be used to vary the length of the shunt **120**. The extension tubes can be modularly attached to the shunt **120** to achieve a desired length. The modular aspect of the shunt **120** permits the user to lengthen the shunt **120** as needed depending on the site of venous return. For example, in some patients, the internal jugular vein IJV is small and/or tortuous. The risk of complications at this site may be higher than at some other locations, due to proximity to other anatomic structures. In addition, hematoma in the neck may lead to airway obstruction and/or cerebral vascular complications. Consequently, for such patients it may be desirable to locate the venous return site at a location other than the internal jugular vein IJV, such as the femoral vein. A femoral vein return site may be accomplished percutaneously, with lower risk of serious complication, and also offers an alternative venous access to the central vein if the internal jugular vein IJV is not available. Furthermore, the femoral venous return changes the layout of the reverse flow shunt such that the shunt controls may be located closer to the "working area" of the intervention, where the devices are being introduced and the contrast injection port is located.

In an embodiment, the shunt **120** has an internal diameter of 4.76 mm (3/16 inch) and has a length of 40-70 cm. As mentioned, the length of the shunt can be adjusted.

Flow Control Assembly—Regulation and Monitoring of Retrograde Flow

The flow control assembly **125** interacts with the retrograde shunt **120** to regulate and/or monitor the retrograde flow rate from the common carotid artery to the venous return site, such as the internal jugular vein, or to the external receptacle **130**. In this regard, the flow control assembly **125** enables the user to achieve higher maximum flow rates than existing systems and to also selectively adjust, set, or otherwise modulate the retrograde flow rate. Various mechanisms can be used to regulate the retrograde flow rate, as described more fully below. The flow control assembly **125** enables the user to configure retrograde blood flow in a manner that is suited for various treatment regimens, as described below.

In general, the ability to control the continuous retrograde flow rate allows the physician to adjust the protocol for individual patients and stages of the procedure. The retrograde blood flow rate will typically be controlled over a range from a low rate to a high rate. The high rate can be at least two fold higher than the low rate, typically being at least three fold higher than the low rate, and often being at least five fold higher than the low rate, or even higher. In an embodiment, the high rate is at least three fold higher than the low rate and in another embodiment the high rate is at least six fold higher than the low rate. While it is generally desirable to have a high retrograde blood flow rate to maximize the extraction of emboli from the carotid arteries, the ability of patients to tolerate retrograde blood flow will vary. Thus, by having a system and protocol which allows the retrograde blood flow rate to be easily modulated, the treating physician can determine when the flow rate exceeds the tolerable level for that patient and set the reverse flow rate accordingly. For patients who cannot tolerate continuous high reverse flow rates, the physician can chose to turn on high flow only for brief, critical portions of the procedure when the risk of embolic debris is highest. At short intervals, for example between 15 seconds and 1 minute, patient tolerance limitations are usually not a factor.

In specific embodiments, the continuous retrograde blood flow rate can be controlled at a base line flow rate in the range from 10 ml/min to 200 ml/min, typically from 20 ml/min to 100 ml/min. These flow rates will be tolerable to the majority of patients. Although flow rate is maintained at the base line flow rate during most of the procedure, at times when the risk

of emboli release is increased, the flow rate can be increased above the base line for a short duration in order to improve the ability to capture such emboli. For example, the retrograde blood flow rate can be increased above the base line when the stent catheter is being introduced, when the stent is being deployed, pre- and post-dilatation of the stent, removal of the common carotid artery occlusion, and the like.

The flow rate control system can be cycled between a relatively low flow rate and a relatively high flow rate in order to "flush" the carotid arteries in the region of the carotid bifurcation prior to reestablishing antegrade flow. Such cycling can be established with a high flow rate which can be approximately two to six fold greater than the low flow rate, typically being about three fold greater. The cycles can typically have a length in the range from 0.5 seconds to 10 seconds, usually from 2 seconds to 5 seconds, with the total duration of the cycling being in the range from 5 seconds to 60 seconds, usually from 10 seconds to 30 seconds.

FIG. **11** shows an example of the system **100** with a schematic representation of the flow control assembly **125**, which is positioned along the shunt **120** such that retrograde blood flow passes through or otherwise communicates with at least a portion of the flow control assembly **125**. The flow control assembly **125** can include various controllable mechanisms for regulating and/or monitoring retrograde flow. The mechanisms can include various means of controlling the retrograde flow, including one or more pumps **1110**, valves **1115**, syringes **1120** and/or a variable resistance component **1125**. The flow control assembly **125** can be manually controlled by a user and/or automatically controlled via a controller **1130** to vary the flow through the shunt **120**. For example, varying the flow resistance, the rate of retrograde blood flow through the shunt **120** can be controlled. The controller **1130**, which is described in more detail below, can be integrated into the flow control assembly **125** or it can be a separate component that communicates with the components of the flow control assembly **125**.

In addition, the flow control assembly **125** can include one or more flow sensors **1135** and/or anatomical data sensors **1140** (described in detail below) for sensing one or more aspects of the retrograde flow. A filter **1145** can be positioned along the shunt **120** for removing emboli before the blood is returned to the venous return site. When the filter **1145** is positioned upstream of the controller **1130**, the filter **1145** can prevent emboli from entering the controller **1145** and potentially clogging the variable flow resistance component **1125**. It should be appreciated that the various components of the flow control assembly **125** (including the pump **1110**, valves **1115**, syringes **1120**, variable resistance component **1125**, sensors **1135**/**1140**, and filter **1145**) can be positioned at various locations along the shunt **120** and at various upstream or downstream locations relative to one another. The components of the flow control assembly **125** are not limited to the locations shown in FIG. **11**. Moreover, the flow control assembly **125** does not necessarily include all of the components but can rather include various sub-combinations of the components. For example, a syringe could optionally be used within the flow control assembly **125** for purposes of regulating flow or it could be used outside of the assembly for purposes other than flow regulation, such as to introduce fluid such as radiopaque contrast into the artery in an antegrade direction via the shunt **120**.

Both the variable resistance component **1125** and the pump **1110** can be coupled to the shunt **120** to control the retrograde flow rate. The variable resistance component **1125** controls the flow resistance, while the pump **1110** provides for positive displacement of the blood through the shunt **120**. Thus, the pump can be activated to drive the retrograde flow rather than relying on the perfusion stump pressures of the ECA and ICA and the venous back pressure to drive the retrograde flow. The pump **1110** can be a peristaltic tube pump or any type of pump including a positive displacement pump. The pump **1110** can be activated and deactivated (either manually or automatically via the controller **1130**) to selectively achieve blood displacement through the shunt **120** and to control the flow rate through the shunt **120**. Displacement of the blood through the shunt **120** can also be achieved in other manners including using the aspiration syringe **1120**, or a suction source such as a vacutainer, vaculock syringe, or wall suction may be used. The pump **1110** can communicate with the controller **1130**.

One or more flow control valves **1115** can be positioned along the pathway of the shunt. The valve(s) can be manually actuated or automatically actuated (via the controller **1130**). The flow control valves **1115** can be, for example one-way valves to prevent flow in the antegrade direction in the shunt **120**, check valves, or high pressure valves which would close off the shunt **120**, for example during high-pressure contrast injections (which are intended to enter the arterial vasculature in an antegrade direction).

The controller **1130** communicates with components of the system **100** including the flow control assembly **125** to enable manual and/or automatic regulation and/or monitoring of the retrograde flow through the components of the system **100** (including, for example, the shunt **120**, the arterial access device **110**, the venous return device **115** and the flow control assembly **125**). For example, a user can actuate one or more actuators on the controller **1130** to manually control the components of the flow control assembly **125**. Manual controls can include switches or dials or similar components located directly on the controller **1130** or components located remote from the controller **1130** such as a foot pedal or similar device. The controller **1130** can also automatically control the components of the system **100** without requiring input from the user. In an embodiment, the user can program software in the controller **1130** to enable such automatic control. The controller **1130** can control actuation of the mechanical portions of the flow control assembly **125**. The controller **1130** can include circuitry or programming that interprets signals generated by sensors **1135**/**1140** such that the controller **1130** can control actuation of the flow control assembly **125** in response to such signals generated by the sensors.

The representation of the controller **1130** in FIG. **11** is merely exemplary. It should be appreciated that the controller **1130** can vary in appearance and structure. The controller **1130** is shown in FIG. **11** as being integrated in a single housing. This permits the user to control the flow control assembly **125** from a single location. It should be appreciated that any of the components of the controller **1130** can be separated into separate housings. Further, FIG. **11** shows the controller **1130** and flow control assembly **125** as separate housings. It should be appreciated that the controller **1130** and flow control regulator **125** can be integrated into a single housing or can be divided into multiple housings or components.

Flow State Indicator(s)

The controller **1130** can include one or more indicators that provides a visual and/or audio signal to the user regarding the state of the retrograde flow. An audio indication advantageously reminds the user of a flow state without requiring the user to visually check the flow controller **1130**. The indicator(s) can include a speaker **1150** and/or a light **1155** or any other means for communicating the state of retrograde flow to the user. The controller **1130** can communicate with

one or more sensors of the system to control activation of the indicator. Or, activation of the indicator can be tied directly to the user actuating one of the flow control actuators **1165**. The indicator need not be a speaker or a light. The indicator could simply be a button or switch that visually indicates the state of the retrograde flow. For example, the button being in a certain state (such as a pressed or down state) may be a visual indication that the retrograde flow is in a high state. Or, a switch or dial pointing toward a particular labeled flow state may be a visual indication that the retrograde flow is in the labeled state.

The indicator can provide a signal indicative of one or more states of the retrograde flow. In an embodiment, the indicator identifies only two discrete states: a state of "high" flow rate and a state of "low" flow rate. In another embodiment, the indicator identifies more than two flow rates, including a "high" flow rate, a "medium" flow rate, and a "low" rate. The indicator can be configured to identify any quantity of discrete states of the retrograde flow or it can identify a graduated signal that corresponds to the state of the retrograde flow. In this regard, the indicator can be a digital or analog meter **1160** that indicates a value of the retrograde flow rate, such as in ml/min or any other units.

In an embodiment, the indicator is configured to indicate to the user whether the retrograde flow rate is in a state of "high" flow rate or a "low" flow rate. For example, the indicator may illuminate in a first manner (e.g., level of brightness) and/or emit a first audio signal when the flow rate is high and then change to a second manner of illumination and/or emit a second audio signal when the flow rate is low. Or, the indicator may illuminate and/or emit an audio signal only when the flow rate is high, or only when the flow rate is low. Given that some patients may be intolerant of a high flow rate or intolerant of a high flow rate beyond an extended period of time, it can be desirable that the indicator provide notification to the user when the flow rate is in the high state. This would serve as a fail safe feature.

In another embodiment, the indicator provides a signal (audio and/or visual) when the flow rate changes state, such as when the flow rate changes from high to low and/or vice-versa. In another embodiment, the indicator provides a signal when no retrograde flow is present, such as when the shunt **120** is blocked or one of the stopcocks in the shunt **120** is closed.

Flow Rate Actuators

The controller **1130** can include one or more actuators that the user can press, switch, manipulate, or otherwise actuate to regulate the retrograde flow rate and/or to monitor the flow rate. For example, the controller **1130** can include a flow control actuator **1165** (such as one or more buttons, knobs, dials, switches, etc.) that the user can actuate to cause the controller to selectively vary an aspect of the reverse flow. For example, in the illustrated embodiment, the flow control actuator **1165** is a knob that can be turned to various discrete positions each of which corresponds to the controller **1130** causing the system **100** to achieve a particular retrograde flow state. The states include, for example, (a) OFF; (b) LO-FLOW; (c) HI-FLOW; and (d) ASPIRATE. It should be appreciated that the foregoing states are merely exemplary and that different states or combinations of states can be used. The controller **1130** achieves the various retrograde flow states by interacting with one or more components of the system, including the sensor(s), valve(s), variable resistance component, and/or pump(s). It should be appreciated that the controller **1130** can also include circuitry and software that regulates the retrograde flow rate and/or monitors the flow rate such that the user wouldn't need to actively actuate the controller **1130**.

The OFF state corresponds to a state where there is no retrograde blood flow through the shunt **120**. When the user sets the flow control actuator **1165** to OFF, the controller **1130** causes the retrograde flow to cease, such as by shutting off valves or closing a stop cock in the shunt **120**. The LO-FLOW and HI-FLOW states correspond to a low retrograde flow rate and a high retrograde flow rate, respectively. When the user sets the flow control actuator **1165** to LO-FLOW or HI-FLOW, the controller **1130** interacts with components of the flow control regulator **125** including pump(s) **1110**, valve(s) **1115** and/or variable resistance component **1125** to increase or decrease the flow rate accordingly. Finally, the ASPIRATE state corresponds to opening the circuit to a suction source, for example a vacutainer or suction unit, if active retrograde flow is desired.

The system can be used to vary the blood flow between various states including an active state, a passive state, an aspiration state, and an off state. The active state corresponds to the system using a means that actively drives retrograde blood flow. Such active means can include, for example, a pump, syringe, vacuum source, etc. The passive state corresponds to when retrograde blood flow is driven by the perfusion stump pressures of the ECA and ICA and possibly the venous pressure. The aspiration state corresponds to the system using a suction source, for example a vacutainer or suction unit, to drive retrograde blood flow. The off state corresponds to the system having zero retrograde blood flow such as the result of closing a stopcock or valve. The low and high flow rates can be either passive or active flow states. In an embodiment, the particular value (such as in ml/min) of either the low flow rate and/or the high flow rate can be predetermined and/or pre-programmed into the controller such that the user does not actually set or input the value. Rather, the user simply selects "high flow" and/or "low flow" (such as by pressing an actuator such as a button on the controller **1130**) and the controller **1130** interacts with one or more of the components of the flow control assembly **125** to cause the flow rate to achieve the predetermined high or low flow rate value. In another embodiment, the user sets or inputs a value for low flow rate and/or high flow rate such as into the controller. In another embodiment, the low flow rate and/or high flow rate is not actually set. Rather, external data (such as data from the anatomical data sensor **1140**) is used as the basis for affects the flow rate.

The flow control actuator **1165** can be multiple actuators, for example one actuator, such as a button or switch, to switch state from LO-FLOW to HI-FLOW and another to close the flow loop to OFF, for example during a contrast injection where the contrast is directed antegrade into the carotid artery. In an embodiment, the flow control actuator **1165** can include multiple actuators. For example, one actuator can be operated to switch flow rate from low to high, another actuator can be operated to temporarily stop flow, and a third actuator (such as a stopcock) can be operated for aspiration using a syringe. In another example, one actuator is operated to switch to LO-FLOW and another actuator is operated to switch to HI-FLOW. Or, the flow control actuator **1165** can include multiple actuators to switch states from LO-FLOW to HI-FLOW and additional actuators for fine-tuning flow rate within the high flow state and low flow state. Upon switching between LO-FLOW and HI-FLOW, these additional actuators can be used to fine-tune the flow rates within those states. Thus, it should be appreciated that within each state (i.e. high flow state and low flow states) a variety of flow rates can be

dialed in and fine-tuned. A wide variety of actuators can be used to achieve control over the state of flow.

The controller **1130** or individual components of the controller **1130** can be located at various positions relative to the patient and/or relative to the other components of the system **100**. For example, the flow control actuator **1165** can be located near the hemostasis valve where any interventional tools are introduced into the patient in order to facilitate access to the flow control actuator **1165** during introduction of the tools. The location may vary, for example, based on whether a transfemoral or a transcervical approach is used, as shown in FIG. **1** A-C. The controller **1130** can have a wireless connection to the remainder of the system **100** and/or a wired connection of adjustable length to permit remote control of the system **100**. The controller **1130** can have a wireless connection with the flow control regulator **125** and/or a wired connection of adjustable length to permit remote control of the flow control regulator **125**. The controller **1130** can also be integrated in the flow control regulator **125**. Where the controller **1130** is mechanically connected to the components of the flow control assembly **125**, a tether with mechanical actuation capabilities can connect the controller **1130** to one or more of the components. In an embodiment, the controller **1130** can be positioned a sufficient distance from the system **100** to permit positioning the controller **1130** outside of a radiation field when fluoroscopy is in use.

The controller **1130** and any of its components can interact with other components of the system (such as the pump(s), sensor(s), shunt, etc) in various manners. For example, any of a variety of mechanical connections can be used to enable communication between the controller **1130** and the system components. Alternately, the controller **1130** can communicate electronically or magnetically with the system components. Electro-mechanical connections can also be used. The controller **1130** can be equipped with control software that enables the controller to implement control functions with the system components. The controller itself can be a mechanical, electrical or electro-mechanical device. The controller can be mechanically, pneumatically, or hydraulically actuated or electromechanically actuated (for example in the case of solenoid actuation of flow control state). The controller **1130** can include a computer, computer processor, and memory, as well as data storage capabilities.

Sensor(s)

As mentioned, the flow control assembly **125** can include or interact with one or more sensors, which communicate with the system **100** and/or communicate with the patient's anatomy. Each of the sensors can be adapted to respond to a physical stimulus (including, for example, heat, light, sound, pressure, magnetism, motion, etc.) and to transmit a resulting signal for measurement or display or for operating the controller **1130**. In an embodiment, the flow sensor **1135** interacts with the shunt **120** to sense an aspect of the flow through the shunt **120**, such as flow velocity or volumetric rate of blood flow. The flow sensor **1135** could be directly coupled to a display that directly displays the value of the volumetric flow rate or the flow velocity. Or the flow sensor **1135** could feed data to the controller **1130** for display of the volumetric flow rate or the flow velocity.

The type of flow sensor **1135** can vary. The flow sensor **1135** can be a mechanical device, such as a paddle wheel, flapper valve, rolling ball, or any mechanical component that responds to the flow through the shunt **120**. Movement of the mechanical device in response to flow through the shunt **120** can serve as a visual indication of fluid flow and can also be calibrated to a scale as a visual indication of fluid flow rate. The mechanical device can be coupled to an electrical component. For example, a paddle wheel can be positioned in the shunt **120** such that fluid flow causes the paddle wheel to rotate, with greater rate of fluid flow causing a greater speed of rotation of the paddle wheel. The paddle wheel can be coupled magnetically to a Hall-effect sensor to detect the speed of rotation, which is indicative of the fluid flow rate through the shunt **120**.

In an embodiment, the flow sensor **1135** is an ultrasonic or electromagnetic flow meter, which allows for blood flow measurement without contacting the blood through the wall of the shunt **120**. An ultrasonic or electromagnetic flow meter can be configured such that it does not have to contact the internal lumen of the shunt **120**. In an embodiment, the flow sensor **1135** at least partially includes a Doppler flow meter, such as a Transonic flow meter, that measures fluid flow through the shunt **120**. It should be appreciated that any of a wide variety of sensor types can be used including an ultrasound flow meter and transducer. Moreover, the system can include multiple sensors.

The system **100** is not limited to using a flow sensor **1135** that is positioned in the shunt **120** or a sensor that interacts with the venous return device **115** or the arterial access device **110**. For example, an anatomical data sensor **1140** can communicate with or otherwise interact with the patient's anatomy such as the patient's neurological anatomy. In this manner, the anatomical data sensor **1140** can sense a measurable anatomical aspect that is directly or indirectly related to the rate of retrograde flow from the carotid artery. For example, the anatomical data sensor **1140** can measure blood flow conditions in the brain, for example the flow velocity in the middle cerebral artery, and communicate such conditions to a display and/or to the controller **1130** for adjustment of the retrograde flow rate based on predetermined criteria. In an embodiment, the anatomical data sensor **1140** comprises a transcranial Doppler ultrasonography (TCD), which is an ultrasound test that uses reflected sound waves to evaluate blood as it flows through the brain. Use of TCD results in a TCD signal that can be communicated to the controller **1130** for controlling the retrograde flow rate to achieve or maintain a desired TCD profile. The anatomical data sensor **1140** can be based on any physiological measurement, including reverse flow rate, blood flow through the middle cerebral artery, TCD signals of embolic particles, or other neuromonitoring signals.

In an embodiment, the system **100** comprises a closed-loop control system. In the closed-loop control system, one or more of the sensors (such as the flow sensor **1135** or the anatomical data sensor **1140**) senses or monitors a predetermined aspect of the system **100** or the anatomy (such as, for example, reverse flow rate and/or neuromonitoring signal). The sensor(s) feed relevant data to the controller **1130**, which continuously adjusts an aspect of the system as necessary to maintain a desired retrograde flow rate. The sensors communicate feedback on how the system **100** is operating to the controller **1130** so that the controller **1130** can translate that data and actuate the components of the flow control regulator **125** to dynamically compensate for disturbances to the retrograde flow rate. For example, the controller **1130** may include software that causes the controller **1130** to signal the components of the flow control assembly **125** to adjust the flow rate such that the flow rate is maintained at a constant state despite differing blood pressures from the patient. In this embodiment, the system **100** need not rely on the user to determine when, how long, and/or what value to set the reverse flow rate in either a high or low state. Rather, software in the controller **1130** can govern such factors. In the closed loop system, the controller **1130** can control the components of the flow con-

trol assembly **125** to establish the level or state of retrograde flow (either analog level or discreet state such as high, low, baseline, medium, etc.) based on the retrograde flow rate sensed by the sensor **1135**.

In an embodiment, the anatomical data sensor **1140** (which measures a physiologic measurement in the patient) communicates a signal to the controller **1130**, which adjusts the flow rate based on the signal. For example the physiological measurement may be based on flow velocity through the MCA, TCD signal, or some other cerebral vascular signal. In the case of the TCD signal, TCD may be used to monitor cerebral flow changes and to detect microemboli. The controller **1130** may adjust the flow rate to maintain the TCD signal within a desired profile. For example, the TCD signal may indicate the presence of microemboli ("TCD hits") and the controller **1130** can adjust the retrograde flow rate to maintain the TCD hits below a threshold value of hits. (See, Ribo, et al., "Transcranial Doppler Monitoring of Transcervical Carotid Stenting with Flow Reversal Protection: A Novel Carotid Revascularization Technique", *Stroke* 2006, 37, 2846-2849; Shekel, et al., "Experience of 500 Cases of Neurophysiological Monitoring in Carotid Endarterectomy", *Acta Neurochir,* 2007, 149:681-689, which are incorporated by reference in their entirety.

In the case of the MCA flow, the controller **1130** can set the retrograde flow rate at the "maximum" flow rate that is tolerated by the patient, as assessed by perfusion to the brain. The controller **1130** can thus control the reverse flow rate to optimize the level of protection for the patient without relying on the user to intercede. In another embodiment, the feedback is based on a state of the devices in the system **100** or the interventional tools being used. For example, a sensor may notify the controller **1130** when the system **100** is in a high risk state, such as when an interventional catheter is positioned in the sheath **605**. The controller **1130** then adjusts the flow rate to compensate for such a state.

The controller **1130** can be used to selectively augment the retrograde flow in a variety of manners. For example, it has been observed that greater reverse flow rates may cause a resultant greater drop in blood flow to the brain, most importantly the ipsilateral MCA, which may not be compensated enough with collateral flow from the Circle of Willis. Thus a higher reverse flow rate for an extended period of time may lead to conditions where the patient's brain is not getting enough blood flow, leading to patient intolerance as exhibited by neurologic symptoms. Studies show that MCA blood velocity less than 10 cm/sec is a threshold value below which patient is at risk for neurological blood deficit. There are other markers for monitoring adequate perfusion to the brains, such as EEG signals. However, a high flow rate may be tolerated even up to a complete stoppage of MCA flow for a short period, up to about 15 seconds to 1 minute.

Thus, the controller **1130** can optimize embolic debris capture by automatically increasing the reverse flow only during limited time periods which correspond to periods of heightened risk of emboli generation during a procedure. These periods of heightened risk include the period of time while an interventional device (such as a dilatation balloon for pre or post stenting dilatation or a stent delivery device) crosses the plaque P. Another period is during an interventional maneuver such as deployment of the stent or inflation and deflation of the balloon pre- or post-dilatation. A third period is during injection of contrast for angiographic imaging of treatment area. During lower risk periods, the controller can cause the reverse flow rate to revert to a lower, baseline level. This lower level may correspond to a low reverse flow rate in the ICA, or even slight antegrade flow in those patients with a high ECA to ICA perfusion pressure ratio.

In a flow regulation system where the user manually sets the state of flow, there is risk that the user may not pay attention to the state of retrograde flow (high or low) and accidentally keep the circuit on high flow. This may then lead to adverse patient reactions. In an embodiment, as a safety mechanism, the default flow rate is the low flow rate. This serves as a fail safe measure for patient's that are intolerant of a high flow rate. In this regard, the controller **1130** can be biased toward the default rate such that the controller causes the system to revert to the low flow rate after passage of a predetermined period of time of high flow rate. The bias toward low flow rate can be achieved via electronics or software, or it can be achieved using mechanical components, or a combination thereof. In an embodiment, the flow control actuator **1165** of the controller **1130** and/or valve(s) **1115** and/or pump(s) **1110** of the flow control regulator **125** are spring loaded toward a state that achieves a low flow rate. The controller **1130** is configured such that the user may over-ride the controller **1130** such as to manually cause the system to revert to a state of low flow rate if desired.

In another safety mechanism, the controller **1130** includes a timer **1170** (FIG. **11**) that keeps time with respect to how long the flow rate has been at a high flow rate. The controller **1130** can be programmed to automatically cause the system **100** to revert to a low flow rate after a predetermined time period of high flow rate, for example after 15, 30, or 60 seconds or more of high flow rate. After the controller reverts to the low flow rate, the user can initiate another predetermined period of high flow rate as desired. Moreover, the user can override the controller **1130** to cause the system **100** to move to the low flow rate (or high flow rate) as desired.

In an exemplary procedure, embolic debris capture is optimized while not causing patient tolerance issues by initially setting the level of retrograde flow at a low rate, and then switching to a high rate for discreet periods of time during critical stages in the procedure. Alternately, the flow rate is initially set at a high rate, and then verifying patient tolerance to that level before proceeding with the rest of the procedure. If the patient shows signs of intolerance, the retrograde flow rate is lowered. Patient tolerance may be determined automatically by the controller based on feedback from the anatomical data sensor **1140** or it may be determined by a user based on patient observation. The adjustments to the retrograde flow rate may be performed automatically by the controller or manually by the user. Alternately, the user may monitor the flow velocity through the middle cerebral artery (MCA), for example using TCD, and then to set the maximum level of reverse flow which keeps the MCA flow velocity above the threshold level. In this situation, the entire procedure may be done without modifying the state of flow. Adjustments may be made as needed if the MCA flow velocity changes during the course of the procedure, or the patient exhibits neurologic symptoms.

Exemplary Mechanisms to Regulate Flow

The system **100** is adapted to regulate retrograde flow in a variety of manners. Any combination of the pump **1110**, valve **1115**, syringe **1120**, and/or variable resistance component **1125** can be manually controlled by the user or automatically controlled via the controller **1130** to adjust the retrograde flow rate. Thus, the system **100** can regulate retrograde flow in various manners, including controlling an active flow component (e.g., pump, syringe, etc.), reducing the flow restriction, switching to an aspiration source (such as a pre-set VacLock syringe, Vacutainer, suction system, or the like), or any combination thereof.

In the situation of FIG. **1**D where an external receptacle or reservoir is used, the retrograde flow may be augmented in various manners. The reservoir has a head height comprised of the height of the blood inside the reservoir and the height of the reservoir with respect to the patient. Reverse flow into the reservoir may be modulated by setting the reservoir height to increase or decrease the amount of pressure gradient from the CCA to the reservoir. In an embodiment, the reservoir is raised to increase the reservoir pressure to a pressure that is greater than venous pressure. Or, the reservoir can be positioned below the patient, such as down to a level of the floor, to lower the reservoir pressure to a pressure below venous or atmospheric pressure.

The variable flow resistance in shunt **120** may be provided in a wide variety of ways. In this regard, flow resistance component **1125** can cause a change in the size or shape of the shunt to vary flow conditions and thereby vary the flow rate. Or, the flow resistance component **1125** can re-route the blood flow through one or more alternate flow pathways in the shunt to vary the flow conditions. Some exemplary embodiments of the flow resistance component **1125** are now described.

As shown in FIGS. **12**A, **12**B, **12**C, and **12**D, in an embodiment the shunt **120** has an inflatable bladder **1205** formed along a portion of its interior lumen. As shown in FIGS. **12**A and **12**C, when the bladder **1205** is deflated, the inner lumen of the shunt **120** remains substantially unrestricted, providing for a low resistance flow. By inflating the bladder **1205**, however, as shown in FIGS. **12**B and **12**D, the flow lumen can be greatly restricted, thus greatly increasing the flow resistance and reducing the flow rate of atrial blood to the venous vasculature. The controller **1130** can control inflation/deflation of the bladder **1205** or it can be controlled manually by the user.

Rather than using an inflatable internal bladder, as shown in FIGS. **12**A-**12**D, the cross-sectional area of the lumen in the shunt **120** may be decreased by applying an external force, such as flattening the shunt **120** with a pair of opposed plates **1405**, as shown in FIGS. **13**A-**13**D. The opposed plates are adapted to move toward and away from one another with the shunt **120** positioned between the plates. When the plates **1405** are spaced apart, as shown in FIGS. **13**A and **13**C, the lumen of the shunt **120** remains unrestricted. When the plates **1405** are closed on the shunt **120**, as shown in FIGS. **13**B and **13**D, in contrast, the plates **1405** constrict the shunt **120**. In this manner, the lumen remaining in shunt **120** can be greatly decreased to increase flow resistance through the shunt. The controller **1130** can control movement of the plates **1405** or such movement can be controlled manually by the user.

Referring now to FIGS. **14**A and **14**B, the available cross-sectional area of the shunt **120** can also be restricted by axially elongating a portion **1505** of the shunt **120**. Prior to axial elongation, the portion **1505** will be generally unchanged, providing a full luminal flow area in the portion **1505**, as shown in FIG. **14**A. By elongating the portion **1505**, however, as shown in FIG. **14**B, the internal luminal area of the shunt **120** in the portion **1505** can be significantly decreased and the length increased, both of which have the effect of increasing the flow resistance. When employing axial elongation to reduce the luminal area of shunt **120**, it will be advantageous to employ a mesh or braid structure in the shunt at least in the portion **1505**. The mesh or braid structure provides the shunt **120** with a pliable feature that facilitates axial elongation without breaking. The controller **1130** can control elongation of the shunt **120** or such it can be controlled manually by the user.

Referring now to FIGS. **15**A-**15**D, instead of applying an external force to reduce the cross-sectional area of shunt **120**, a portion of the shunt **120** can be made with a small diameter to begin with, as shown in FIGS. **15**A and **15**C. The shunt **120** passes through a chamber **1600** which is sealed at both ends. A vacuum is applied within the chamber **1600** exterior of the shunt **120** to cause a pressure gradient. The pressure gradient cause the shunt **120** to increase in size within the chamber **120**, as shown in FIGS. **12**B and **12**D. The vacuum may be applied in a receptacle **1605** attached to a vacuum source **1610**. Conversely, a similar system may be employed with a shunt **120** whose resting configuration is in the increased size. Pressure may be applied to the chamber to shrink or flatten the shunt to decrease the flow resistance. The controller **1130** can control the vacuum or it can be controlled manually by the user.

As yet another alternative, the flow resistance through shunt **120** may be changed by providing two or more alternative flow paths. As shown in FIG. **16**A, the flow through shunt **120** passes through a main lumen **1700** as well as secondary lumen **1705**. The secondary lumen **1705** is longer and/or has a smaller diameter than the main lumen **1700**. Thus, the secondary lumen **1705** has higher flow resistance than the main lumen **1700**. By passing the blood through both these lumens, the flow resistance will be at a minimum. Blood is able to flow through both lumens **1700** and **1705** due to the pressure drop created in the main lumen **1700** across the inlet and outlet of the secondary lumen **1705**. This has the benefit of preventing stagnant blood. As shown in FIG. **16**B, by blocking flow through the main lumen **1700** of shunt **120**, the flow can be diverted entirely to the secondary lumen **1705**, thus increasing the flow resistance and reducing the blood flow rate. It will be appreciated that additional flow lumens could also be provided in parallel to allow for a three, four, or more discrete flow resistances. The shunt **120** may be equipped with a valve **1710** that controls flow to the main lumen **1700** and the secondary lumen **1705** with the valve **1710** being controlled by the controller **1130** or being controlled manually by the user. The embodiment of FIGS. **16**A and **16**B has an advantage in that this embodiment in that it does not require as small of lumen sizes to achieve desired retrograde flow rates as some of the other embodiments of variable flow resistance mechanisms. This is a benefit in blood flow lines in that there is less chance of clogging and causing clots in larger lumen sizes than smaller lumen sizes.

The shunt **120** can also be arranged in a variety of coiled configurations which permit external compression to vary the flow resistance in a variety of ways. Arrangement of a portion of the shunt **120** in a coil contains a long section of the shunt in a relatively small area. This allows compression of a long length of the shunt **120** over a small space. As shown in FIGS. **17**A and **17**B, a portion of the shunt **120** is wound around a dowel **1805** to form a coiled region. The dowel **1805** has plates **1810***a* and **1810***b* which can move toward and away from each other in an axial direction. When plates **1810***a* and **1810***b* are moved away from each other, the coiled portion of the shunt **105** is uncompressed and flow resistance is at a minimum. The shunt **120** is large diameter, so when the shunt is non-compressed, the flow resistance is low, allowing a high-flow state. To down-regulate the flow, the two plates **1810***a* and **1810***b* are pushed together, compressing the coil of shunt **120**. By moving the plates **1810***a* and **1810***b* together, as shown in FIG. **17**B, the coiled portion of the shunt **120** is compressed to increase the flow resistance. The controller **1130** can control the plates or they can be controlled manually by the user.

A similar compression apparatus is shown in FIGS. **18**A and **18**B. In this configuration, the coiled shunt **120** is encased between two movable cylinder halves **1905***a* and **1905***b*. The halves **1905***a* and **1905***b* can slide along dowel pins **1910** to move toward and away from one another. When the cylinder halves **1905** are moved apart, the coiled shunt **120** is uncompressed and flow resistance is at a minimum. When the cylinder halves **1905** are brought together, the coiled shunt **120** is compressed circumferentially to increase flow resistance. The controller **1130** can control the halves **1905** or they can be controlled manually by the user.

As shown in FIGS. **19**A through **19**D, the shunt **120** may also be wound around an axially split mandrel **2010** having wedge elements **2015** on opposed ends. By axially translating wedge elements **2015** in and out of the split mandrel **2010**, the split portions of the mandrel are opened and closed relative to one another, causing the coil of tubing to be stretched (when the mandrel portions **2010** are spread apart, FIG. **19**C, **19**D) or relaxed (when the mandrel portions **2010** are closed, FIG. **19**A, **19**B.) Thus, when the wedge elements **2015** are spaced apart, as shown in FIGS. **19**A and **19**B, the outward pressure on the shunt **120** is at a minimum and the flow resistance is also at a minimum. By driving the wedge elements **2015** inwardly, as shown in FIGS. **19**C and **19**D, the split mandrel halves **2020** are forced apart and the coil of shunt **120** is stretched. This has the dual effect of decreasing the cross sectional area of the shunt and lengthening the shunt in the coiled region, both of which lead to increased flow resistance.

FIGS. **20**A and **20**B show an embodiment of the variable resistance component **1125** that uses a dowel to vary the resistance to flow. A housing **2030** is inserted into a section of the shunt **120**. The housing **2030** has an internal lumen **2035** that is contiguous with the internal lumen of the shunt **120**. A dowel **2040** can move into and out of a portion of the internal lumen **2035**. As shown in FIG. **20**A, when the dowel **2040** is inserted into the internal lumen **2035**, the internal lumen **2035** is annular with a cross-sectional area that is much smaller than the cross-sectional area of the internal lumen **2035** when the dowel is not present. Thus, flow resistance increases when the dowel **2040** is positioned in the internal lumen **2035**. The annular internal lumen **2035** has a length S that can be varied by varying the portion of the dowel **2040** that is inserted into the lumen **2035**. Thus, as more of the dowel **2040** is inserted, the length S of the annular lumen **2035** increases and vice-versa. This can be used to vary the level of flow resistance caused by the presence of the dowel **2040**.

The dowel **2040** enters the internal lumen **2035** via a hemostasis valve in the housing **2030**. A cap **2050** and an O-ring **2055** provide a sealing engagement that seals the housing **2030** and dowel **2040** against leakage. The cap **2050** may have a locking feature, such as threads, that can be used to lock the cap **2050** against the housing **2030** and to also fix the position of the dowel **2040** in the housing **2040**. When the cap **2050** is locked or tightened, the cap **2050** exerts pressure against the O-ring **2055** to tighten it against the dowel **2040** in a sealed engagement. When the cap **2050** is unlocked or untightened, the dowel **2040** is free to move in and out of the housing **2030**.

Exemplary Methods of Use

Referring now to FIGS. **21**A-**21**E, flow through the carotid artery bifurcation at different stages of the methods of the present disclosure will be described. Initially, as shown in FIG. **21**A, the distal sheath **605** of the arterial access device **110** is introduced into the common carotid artery CCA. As mentioned, entry into the common carotid artery CCA can be via a transcervical or transfemoral approach. After the sheath **605** of the arterial access device **110** has been introduced into the common carotid artery CCA, the blood flow will continue in antegrade direction AG with flow from the common carotid artery entering both the internal carotid artery ICA and the external carotid artery ECA, as shown in FIG. **21**A.

The venous return device **115** is then inserted into a venous return site, such as the internal jugular vein IJV (not shown in FIGS. **21**A-**21**E). The shunt **120** is used to connect the flow lines **615** and **915** of the arterial access device **110** and the venous return device **115**, respectively (as shown in FIG. **1**A). In this manner, the shunt **120** provides a passageway for retrograde flow from the atrial access device **110** to the venous return device **115**. In another embodiment, the shunt **120** connects to an external receptacle **130** rather than to the venous return device **115**, as shown in FIG. **1**C.

Once all components of the system are in place and connected, flow through the common carotid artery CCA is stopped, typically using the occlusion element **129** as shown in FIG. **21**B. The occlusion element **129** is expanded at a location proximal to the distal opening of the sheath **605** to occlude the CCA. Alternately, the tourniquet **2105** (FIG. **1**A) or other external vessel occlusion device can be used to occlude the common carotid artery CCA to stop flow therethrough. In an alternative embodiment, the occlusion element **129** is introduced on second occlusion device **112** separate from the distal sheath **605** of the arterial access device **110**, as shown in FIG. **2**B. The ECA may also be occluded with a separate occlusion element, either on the same device **110** or on a separate occlusion device.

At that point retrograde flow RG from the external carotid artery ECA and internal carotid artery ICA will begin and will flow through the sheath **605**, the flow line **615**, the shunt **120**, and into the venous return device **115** via the flow line **915**. The flow control assembly **125** regulates the retrograde flow as described above. FIG. **21**B shows the occurrence of retrograde flow RG. While the retrograde flow is maintained, a stent delivery catheter **2110** is introduced into the sheath **605**, as shown in FIG. **21**C. The stent delivery catheter **2110** is introduced into the sheath **605** through the hemostasis valve **615** and the proximal extension **610** (not shown in FIGS. **21**A-**21**E) of the arterial access device **110**. The stent delivery catheter **2110** is advanced into the internal carotid artery ICA and a stent **2115** deployed at the bifurcation B, as shown in FIG. **21**D.

The rate of retrograde flow can be increased during periods of higher risk for emboli generation for example while the stent delivery catheter **2110** is being introduced and optionally while the stent **2115** is being deployed. The rate of retrograde flow can be increased also during placement and expansion of balloons for dilatation prior to or after stent deployment. An atherectomy can also be performed before stenting under retrograde flow.

Still further optionally, after the stent **2115** has been expanded, the bifurcation B can be flushed by cycling the retrograde flow between a low flow rate and high flow rate. The region within the carotid arteries where the stent has been deployed or other procedure performed may be flushed with blood prior to reestablishing normal blood flow. In particular, while the common carotid artery remains occluded, a balloon catheter or other occlusion element may be advanced into the internal carotid artery and deployed to fully occlude that artery. The same maneuver may also be used to perform a post-deployment stent dilatation, which is typically done currently in self-expanding stent procedures. Flow from the common carotid artery and into the external carotid artery may then be reestablished by temporarily opening the occluding means present in the artery. The resulting flow will thus be able to flush the common carotid artery which saw slow, turbulent, or stagnant flow during carotid artery occlusion

into the external carotid artery. In addition, the same balloon may be positioned distally of the stent during reverse flow and forward flow then established by temporarily relieving occlusion of the common carotid artery and flushing. Thus, the flushing action occurs in the stented area to help remove loose or loosely adhering embolic debris in that region.

Optionally, while flow from the common carotid artery continues and the internal carotid artery remains blocked, measures can be taken to further loosen emboli from the treated region. For example, mechanical elements may be used to clean or remove loose or loosely attached plaque or other potentially embolic debris within the stent, thrombolytic or other fluid delivery catheters may be used to clean the area, or other procedures may be performed. For example, treatment of in-stent restenosis using balloons, atherectomy, or more stents can be performed under retrograde flow In another example, the occlusion balloon catheter may include flow or aspiration lumens or channels which open proximal to the balloon. Saline, thrombolytics, or other fluids may be infused and/or blood and debris aspirated to or from the treated area without the need for an additional device. While the emboli thus released will flow into the external carotid artery, the external carotid artery is generally less sensitive to emboli release than the internal carotid artery. By prophylactically removing potential emboli which remain, when flow to the internal carotid artery is reestablished, the risk of emboli release is even further reduced. The emboli can also be released under retrograde flow so that the emboli flows through the shunt **120** to the venous system, a filter in the shunt **120**, or the receptacle **130**.

After the bifurcation has been cleared of emboli, the occlusion element **129** or alternately the tourniquet **2105** can be released, reestablishing antegrade flow, as shown in FIG. **21**E. The sheath **605** can then be removed.

A self-closing element may be deployed about the penetration in the wall of the common carotid artery prior to withdrawing the sheath **605** at the end of the procedure. Usually, the self-closing element will be deployed at or near the beginning of the procedure, but optionally, the self-closing element could be deployed as the sheath is being withdrawn, often being released from a distal end of the sheath onto the wall of the common carotid artery. Use of the self-closing element is advantageous since it affects substantially the rapid closure of the penetration in the common carotid artery as the sheath is being withdrawn. Such rapid closure can reduce or eliminate unintended blood loss either at the end of the procedure or during accidental dislodgement of the sheath. In addition, such a self-closing element may reduce the risk of arterial wall dissection during access. Further, the self-closing element may be configured to exert a frictional or other retention force on the sheath during the procedure. Such a retention force is advantageous and can reduce the chance of accidentally dislodging the sheath during the procedure. A self-closing element eliminates the need for vascular surgical closure of the artery with suture after sheath removal, reducing the need for a large surgical field and greatly reducing the surgical skill required for the procedure.

The disclosed systems and methods may employ a wide variety of self-closing elements, typically being mechanical elements which include an anchor portion and a self-closing portion. The anchor portion may comprise hooks, pins, staples, clips, tine, suture, or the like, which are engaged in the exterior surface of the common carotid artery about the penetration to immobilize the self-closing element when the penetration is fully open. The self-closing element may also include a spring-like or other self-closing portion which, upon removal of the sheath, will close the anchor portion in order to draw the tissue in the arterial wall together to provide closure. Usually, the closure will be sufficient so that no further measures need be taken to close or seal the penetration. Optionally, however, it may be desirable to provide for supplemental sealing of the self-closing element after the sheath is withdrawn. For example, the self-closing element and/or the tissue tract in the region of the element can be treated with hemostatic materials, such as bioabsorbable polymers, collagen plugs, glues, sealants, clotting factors, or other clot-promoting agents. Alternatively, the tissue or self-closing element could be sealed using other sealing protocols, such as electrocautery, suturing, clipping, stapling, or the like. In another method, the self-closing element will be a self-sealing membrane or gasket material which is attached to the outer wall of the vessel with clips, glue, bands, or other means. The self-sealing membrane may have an inner opening such as a slit or cross cut, which would be normally closed against blood pressure. Any of these self-closing elements could be designed to be placed in an open surgical procedure, or deployed percutaneously.

In another embodiment, carotid artery stenting may be performed after the sheath is placed and an occlusion balloon catheter deployed in the external carotid artery. The stent having a side hole or other element intended to not block the ostium of the external carotid artery may be delivered through the sheath with a guidewire or a shaft of an external carotid artery occlusion balloon received through the side hole. Thus, as the stent is advanced, typically by a catheter being introduced over a guidewire which extends into the internal carotid artery, the presence of the catheter shaft in the side hole will ensure that the side hole becomes aligned with the ostium to the external carotid artery as the stent is being advanced. When an occlusion balloon is deployed in the external carotid artery, the side hole prevents trapping the external carotid artery occlusion balloon shaft with the stent which is a disadvantage of the other flow reversal systems. This approach also avoids "jailing" the external carotid artery, and if the stent is covered with a graft material, avoids blocking flow to the external carotid artery.

In another embodiment, stents are placed which have a shape which substantially conforms to any preexisting angle between the common carotid artery and the internal carotid artery. Due to significant variation in the anatomy among patients, the bifurcation between the internal carotid artery and the external carotid artery may have a wide variety of angles and shapes. By providing a family of stents having differing geometries, or by providing individual stents which may be shaped by the physician prior to deployment, the physician may choose a stent which matches the patient's particular anatomy prior to deployment. The patient's anatomy may be determined using angiography or by other conventional means. As a still further alternative, the stent may have sections of articulation. These stents may be placed first and then articulated in situ in order to match the angle of bifurcation between a common carotid artery and internal carotid artery. Stents may be placed in the carotid arteries, where the stents have a sidewall with different density zones.

In another embodiment, a stent may be placed where the stent is at least partly covered with a graft material at either or both ends. Generally, the stent will be free from graft material and the middle section of the stent which will be deployed adjacent to the ostium to the external carotid artery to allow blood flow from the common carotid artery into the external carotid artery.

In another embodiment, a stent delivery system can be optimized for transcervical access by making them shorter and more rigid than systems designed for transfemoral

access. These changes will improve the ability to torque and position the stent accurately during deployment. In addition, the stent delivery system can be designed to align the stent with the ostium of the external carotid artery, either by using the external carotid occlusion balloon or a separate guide wire in the external carotid artery, which is especially useful with stents with sideholes or for stents with curves, bends, or angulation where orientation is critical.

In certain embodiments, the shunt is fixedly connected to the arterial access sheath and the venous return sheath so that the entire assembly of the replaceable flow assembly and sheaths may be disposable and replaceable as a unit. In other instances, the flow control assembly may be removably attached to either or both of the sheaths.

In an embodiment, the user first determines whether any periods of heightened risk of emboli generation may exist during the procedure. As mentioned, some exemplary periods of heightened risk include (1) during periods when the plaque P is being crossed by a device; (2) during an interventional procedure, such as during delivery of a stent or during inflation or deflation of a balloon catheter or guidewire; (3) during injection or contrast. The foregoing are merely examples of periods of heightened risk. During such periods, the user sets the retrograde flow at a high rate for a discreet period of time. At the end of the high risk period, or if the patient exhibits any intolerance to the high flow rate, then the user reverts the flow state to baseline flow. If the system has a timer, the flow state automatically reverts to baseline flow after a set period of time. In this case, the user may re-set the flow state to high flow if the procedure is still in a period of heightened embolic risk.

In another embodiment, if the patient exhibits an intolerance to the presence of retrograde flow, then retrograde flow is established only during placement of a filter in the ICA distal to the plaque P. Retrograde flow is then ceased while an interventional procedure is performed on the plaque P. Retrograde flow is then re-established while the filter is removed. In another embodiment, a filter is places in the ICA distal of the plaque P and retrograde flow is established while the filter is in place. This embodiment combines the use of a distal filter with retrograde flow.

Although embodiments of various methods and devices are described herein in detail with reference to certain versions, it should be appreciated that other versions, embodiments, methods of use, and combinations thereof are also possible. Therefore the spirit and scope of the appended claims should not be limited to the description of the embodiments contained herein.

The invention claimed is:

1. A method for accessing and treating a carotid artery, comprising:

forming a transcervical incision in a neck of a patient;

forming a penetration in a wall of a common carotid artery via the transcervical incision, the penetration being located at distance of around 5 cm to 7 cm below a bifurcation location where the patient's common carotid artery bifurcates into an internal carotid artery and external carotid artery;

positioning an arterial access sheath through the transcervical incision and the penetration, wherein the arterial access sheath has a working length of 5 cm to 15 cm;

inserting no more than the working length of the arterial access sheath into the common carotid artery;

blocking blood flow from the common carotid artery past the sheath;

allowing retrograde blood flow from the internal carotid artery into the sheath and into a shunt from the sheath while the common carotid artery remains blocked; and

adjusting the state of retrograde blood flow through the shunt.

2. A method as in claim **1**, wherein adjusting the state of retrograde blood flow comprises changing from a passive flow state to an active flow state.

3. A method as in claim **1**, wherein adjusting the state of retrograde blood flow comprises changing the flow rate from a passive low flow state to a passive high flow state.

4. A method as in claim **3**, wherein the rate is controlled over a range from a low rate to a high rate, where the high rate is at least three fold higher than the low rate.

5. A method as in claim **3**, wherein the high rate is at least three fold higher than the low rate.

6. A method as in claim **3**, wherein the high rate is at least five fold higher than the low rate.

7. A method as in claim **1**, wherein adjusting the state of retrograde blood flow comprises changing the flow rate from a passive low flow state to an active high flow state.

8. A method as in claim **1**, wherein adjusting the state of retrograde blood flow comprises changing the flow rate from a passive low flow state to a state where blood flow through the shunt is aspirated.

9. A method as in claim **1**, wherein adjusting comprises adjusting flow resistance from the arterial access sheath to a return site, wherein the flow resistance within the shunt is adjusted using a flow control element attached directly to the shunt.

10. A method as in claim **9**, wherein the resistance is adjusted causing blood to flow through a flow resistance element coupled to the shunt.

11. A method as in claim **1**, wherein adjusting comprises actively pumping blood from the arterial access sheath to a venous return site.

12. A method as in claim **1**, wherein retrograde flow is controlled at a baseline low flow rate in the range from 10 ml/min to 200 ml/min during a majority of a procedure.

13. A method as in claim **1**, wherein the retrograde flow is increased to a higher rate when there is an increased risk of emboli release.

14. A method as in claim **1**, wherein the procedure comprises stenting of the internal carotid artery and the flow rate is increased during at least one of when a stent delivery catheter is introduced to the carotid artery, when the stent is deployed in the carotid artery, when the stent delivery catheter is removed from the carotid artery, or when the common carotid artery occlusion is released.

15. A method as in claim **1**, wherein the flow rate is increased manually by the user.

16. A method as in claim **1**, wherein the flow rate is increased automatically.

17. A method as in claim **1**, further comprising measuring the retrograde flow rate, wherein the continuous retrograde flow rate is controlled based on the measured flow rate.

18. A method as in claim **1**, wherein the rate of retrograde flow is cycled between a lower flow rate and a higher flow rate to dislodge emboli from the common and external carotid arteries.

19. A method for accessing and treating a carotid artery, comprising:

forming a penetration in a wall of a common carotid artery;

positioning an arterial access sheath through the penetration;

blocking blood flow from the common carotid artery past the sheath;

allowing retrograde blood flow from the internal carotid artery into the sheath and into a shunt from the sheath while the common carotid artery remains blocked; and

adjusting the state of retrograde blood flow through the shunt, wherein adjusting comprises adjusting flow resistance from the arterial access sheath to a return site by causing blood to flow through a flow resistance element coupled to the shunt, wherein the flow resistance element comprises two or more parallel flow paths of the shunt and a valve to open or close one or more of the flow paths to selectively direct blood flow through one or more of the flow paths.

20. A method as in claim **19**, wherein the parallel flow paths include a main flow path and a secondary flow path, and wherein the secondary flow path has a higher resistance to blood flow than the main flow path.

21. A method as in claim **20**, wherein the secondary flow path is longer than the main flow path.

22. A method as in claim **20**, wherein the secondary flow path has a smaller diameter than the main flow path.

23. A method as in claim **20**, wherein the valve is configured to block blood flow through the main flow path of the shunt such that blood flow through the shunt is diverted entirely to the secondary flow path thereby increasing the flow resistance and reducing the blood flow rate through the shunt.

24. A method as in claim **19**, further comprising a controller that can be actuated by a user to control the valve.

25. A method as in claim **24**, wherein the flow resistance element and the controller are integrated into a single housing.

26. A method as in claim **19**, wherein retrograde flow is controlled at a baseline low flow rate in the range from 10 ml/min to 200 ml/min during a majority of a procedure.

27. A method as in claim **19**, wherein the retrograde flow is increased to a higher rate when there is an increased risk of emboli release.

28. A method as in claim **19**, wherein the procedure comprises stenting of the internal carotid artery and the flow rate is increased during at least one of when a stent delivery catheter is introduced to the carotid artery, when the stent is deployed in the carotid artery, when the stent delivery catheter is removed from the carotid artery, or when the common carotid artery occlusion is released.

29. A method as in claim **19**, wherein the flow rate is increased manually by the user.

30. A method as in claim **19**, wherein the flow rate is increased automatically.

31. A method as in claim **19**, further comprising measuring the retrograde flow rate, wherein the continuous retrograde flow rate is controlled based on the measured flow rate.

32. A method as in claim **19**, wherein the rate of retrograde flow is cycled between a lower flow rate and a higher flow rate to dislodge emboli from the common and external carotid arteries.

33. A method for accessing and treating a carotid artery, comprising:

forming a transcervical incision in a neck of a patient;

forming a penetration in a wall of a common carotid artery;

inserting a distal section of the arterial access sheath through the transcervical incision and the penetration, wherein the arterial access sheath includes a removable stopper member that covers a portion of the distal section of the sheath such that a portion of the distal section of the sheath is covered by the stopper member and a portion of the distal section of the sheath is exposed, wherein the stopper member, when coupled to the sheath, limits insertion of the sheath into the carotid artery to the exposed portion;

inserting no more than the exposed portion of the sheath into the common carotid artery;

blocking blood flow from the common carotid artery past the sheath;

allowing retrograde blood flow from the internal carotid artery into the sheath and into a shunt from the sheath while the common carotid artery remains blocked; and

adjusting the state of retrograde blood flow through the shunt using a flow control element attached directly to the shunt.

* * * * *