US008075510B2

(12) **United States Patent**
Aklog et al.

(10) **Patent No.: US 8,075,510 B2**
(45) **Date of Patent: Dec. 13, 2011**

(54) **SYSTEMS AND METHODS FOR REMOVING UNDESIRABLE MATERIAL WITHIN A CIRCULATORY SYSTEM**

(75) Inventors: **Lishan Aklog**, Scottsdale, AZ (US); **Michael Glennon**, Norwell, MA (US)

(73) Assignee: **Vortex Medical, Inc.**, Norwell, MA (US)

(*) Notice: Subject to any disclaimer, the term of this patent is extended or adjusted under 35 U.S.C. 154(b) by 515 days.

(21) Appl. No.: **12/187,121**

(22) Filed: **Aug. 6, 2008**

(65) **Prior Publication Data**

US 2009/0163846 A1 Jun. 25, 2009

Related U.S. Application Data

(60) Provisional application No. 61/015,301, filed on Dec. 20, 2007.

(51) **Int. Cl.**
A61M 37/00 (2006.01)
A61M 29/00 (2006.01)
A61M 1/00 (2006.01)

(52) **U.S. Cl.** **604/6.11**; 604/6.09; 604/5.01; 604/103.07; 604/319; 606/200

(58) **Field of Classification Search** 604/4.01, 604/5.01, 6.09, 6.11, 6.16, 96.01, 103.07, 604/319; 606/200
See application file for complete search history.

(56) **References Cited**

U.S. PATENT DOCUMENTS

5,158,533	A	10/1992	Strauss et al.	604/4
5,188,618	A	2/1993	Thomas	604/267
6,083,239	A	7/2000	Addis	606/200
6,206,868	B1	3/2001	Parodi	604/500
6,364,896	B1	4/2002	Addis	606/200
6,413,235	B1	7/2002	Parodi	604/104
6,423,032	B2	7/2002	Parodi	604/103.07
6,500,191	B2	12/2002	Addis	606/200
6,540,712	B1	4/2003	Parodi et al.	604/6.14
6,719,717	B1	4/2004	Johnson et al.	604/9
6,852,280	B2	2/2005	Vijay	
6,905,490	B2	6/2005	Parodi	604/509
6,908,474	B2	6/2005	Hogendijk et al.	606/200

(Continued)

FOREIGN PATENT DOCUMENTS

WO WO 99/45835 9/1999

OTHER PUBLICATIONS

F.A.S.T. Funnel Catheter Proximal Occlusion Embolectomy/ Thrombectomy System, Genesis Medical Interventional.

(Continued)

Primary Examiner — Leslie Deak
(74) *Attorney, Agent, or Firm* — Greenberg Traurig, LLP; Chinh H. Pham

(57) **ABSTRACT**

A system for removing undesirable material from vessels and from chambers within the heart is provided. The system includes a suction cannula for removing the undesirable material from a site of interest within a patient. A filter device may be provided for capturing the undesirable material and removing it from the fluid flow. The system also includes pump for generating the necessary suction force through the suction cannula to dislodge the undesirable material from the site of interest and for generating a sufficient driving force to direct the fluid flow downstream within the system. The system further includes a reinfusion cannula for introducing fluid removed from the site of interest back into a patient. A method for removing undesirable material from vessels and from heart chambers is also provided.

67 Claims, 11 Drawing Sheets

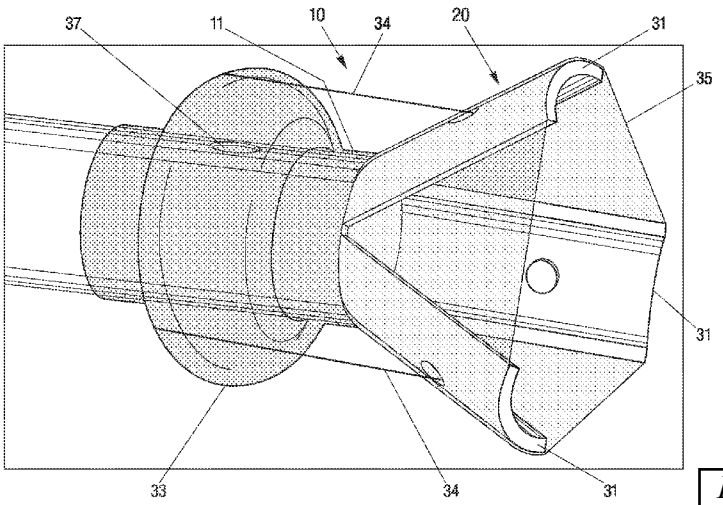

Imperative Care v. Inari Medical
US Patent 11,969,333
Imperative Care Ex. 1019

U.S. PATENT DOCUMENTS

6,936,060	B2	8/2005	Hogendijk et al.	606/200
6,946,099	B2	9/2005	Vijay et al.	
6,960,222	B2	11/2005	Vo et al.	606/200
7,118,585	B2	10/2006	Addis	606/200
7,223,253	B2	5/2007	Hogendijk	604/6.12
7,229,402	B2	6/2007	Diaz et al.	600/17
7,374,560	B2	5/2008	Ressemann et al.	604/509
7,799,046	B2	9/2010	White et al.	
2001/0049486	A1	12/2001	Evans et al.	604/4.01
2002/0058964	A1	5/2002	Addis	606/200
2002/0165574	A1	11/2002	Ressemann et al.	604/194
2003/0093112	A1	5/2003	Addis	606/200
2008/0041516	A1	2/2008	Chiu et al.	156/173

OTHER PUBLICATIONS

PCT International Search Report based on PCT/US2008/072352 dated Nov. 4, 2008.

Greenfield et al., *Transvenous Removal of Pulmonary Emboli by Vacuum-Cup Catheter Technique*, Journal of Surgical Research, vol. 9, No. 6, (Jun. 1969) pp. 347-352.

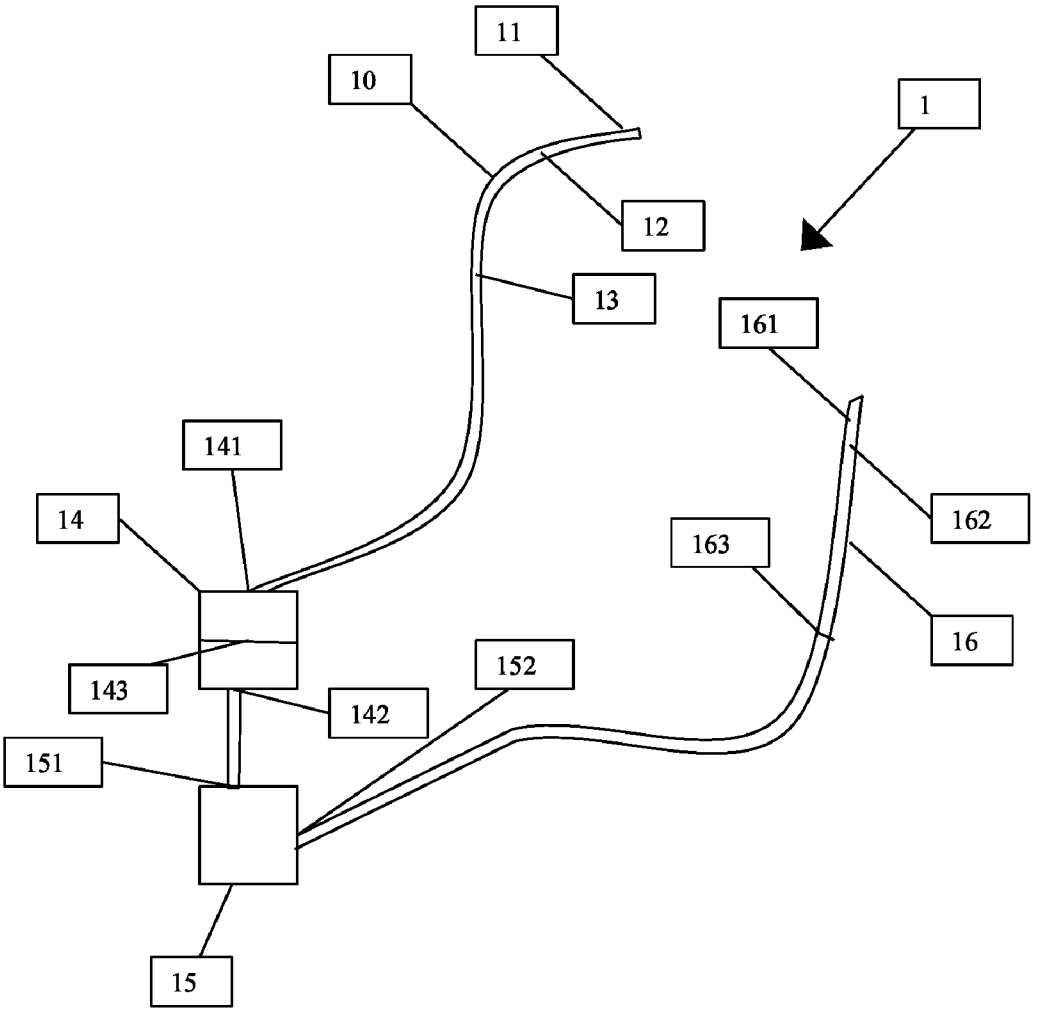

Fig. 1

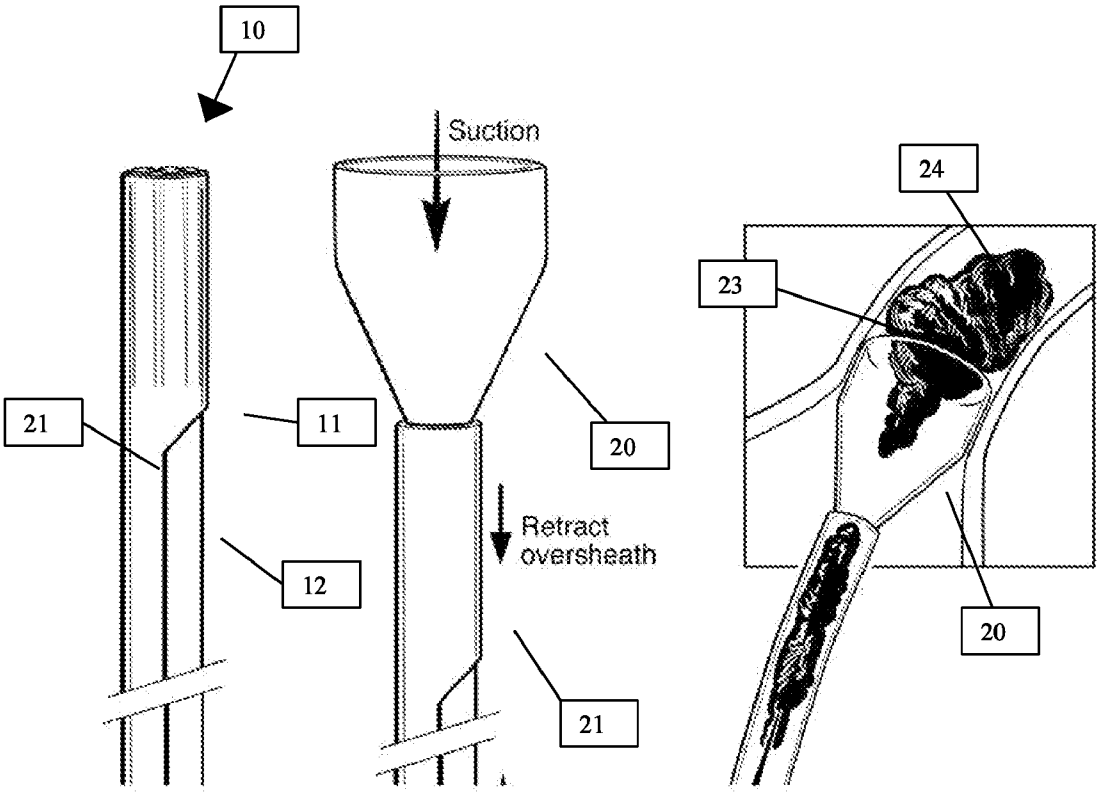

Fig. 2A Fig. 2B Fig. 2C

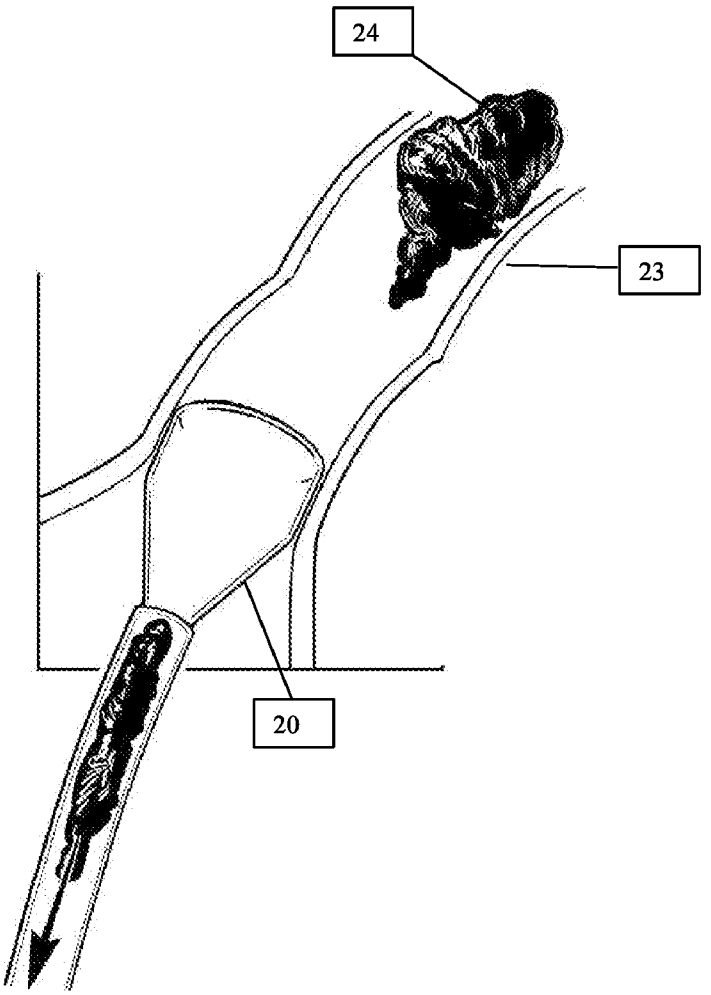

Fig. 2D

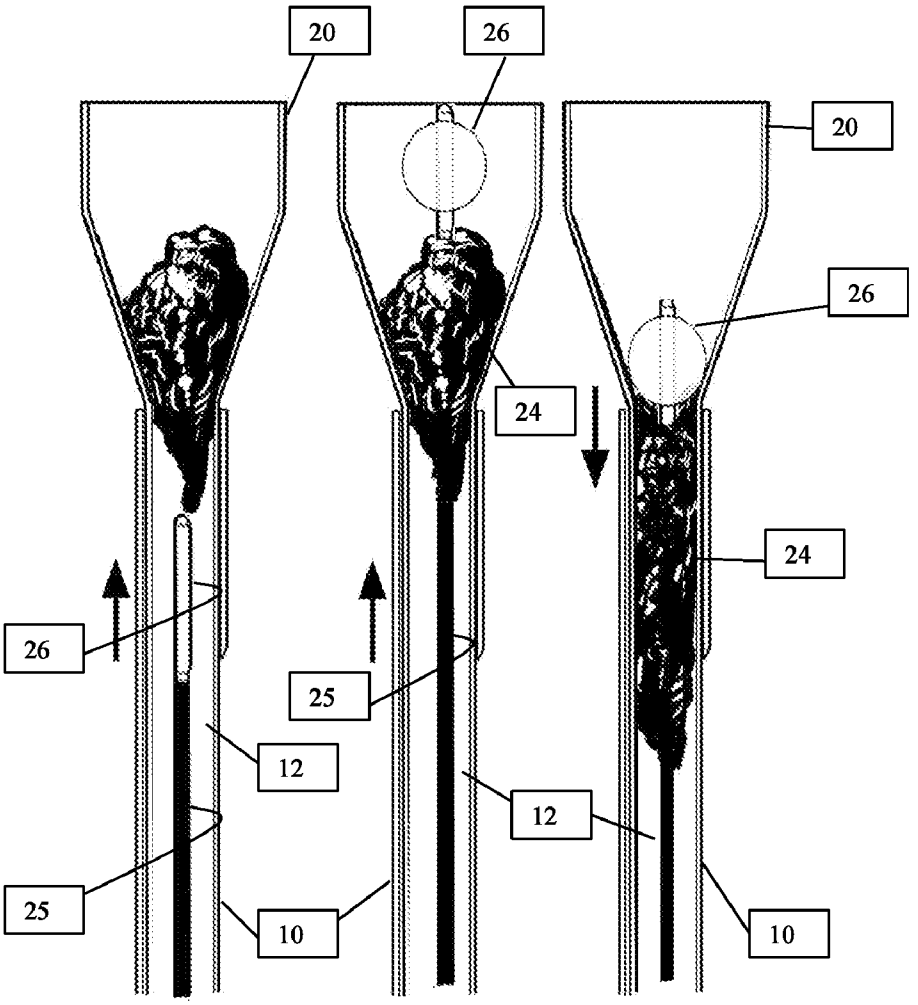

Cross section of catheter with eccentric balloon

Fig. 2E Fig. 2F Fig. 2G

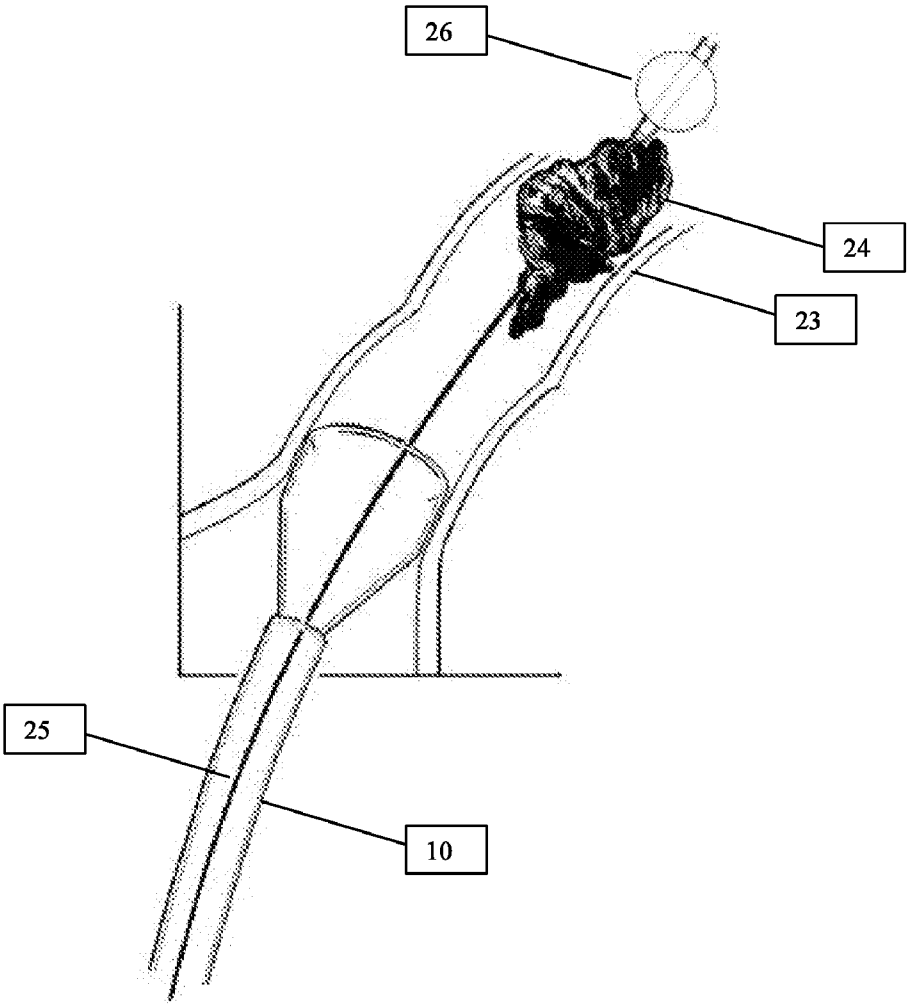

Fig. 2H

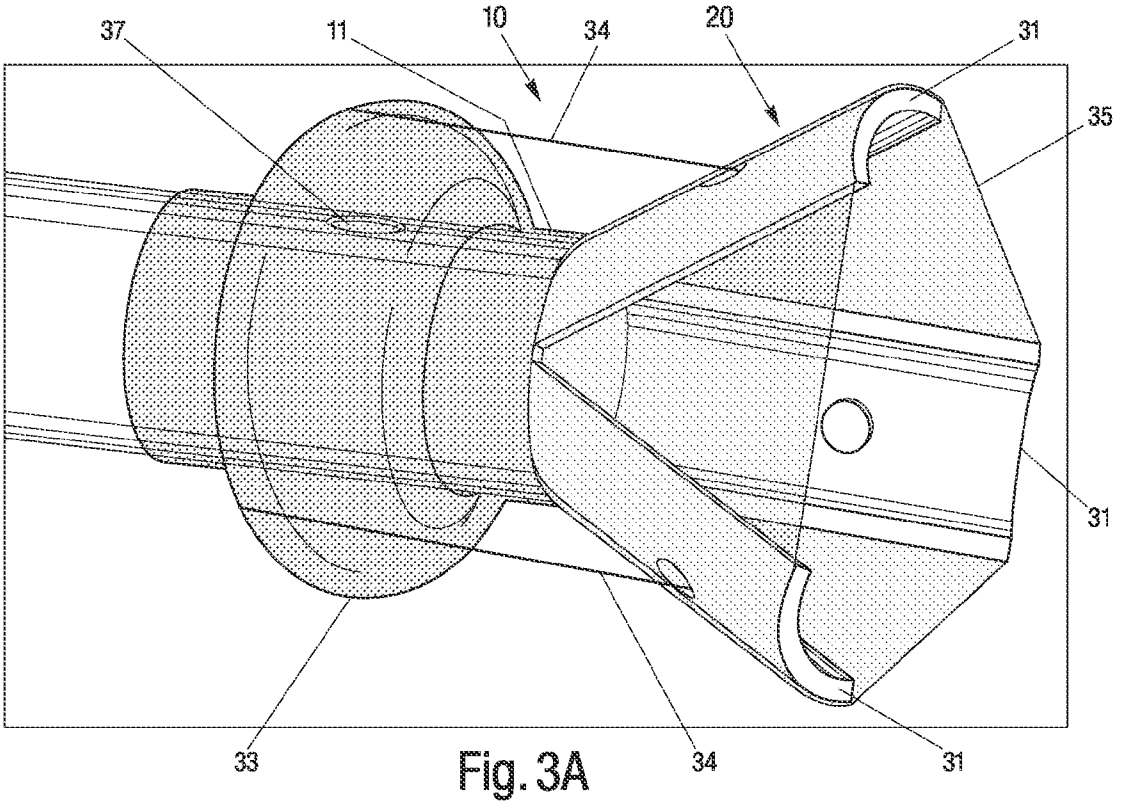

Fig. 3A

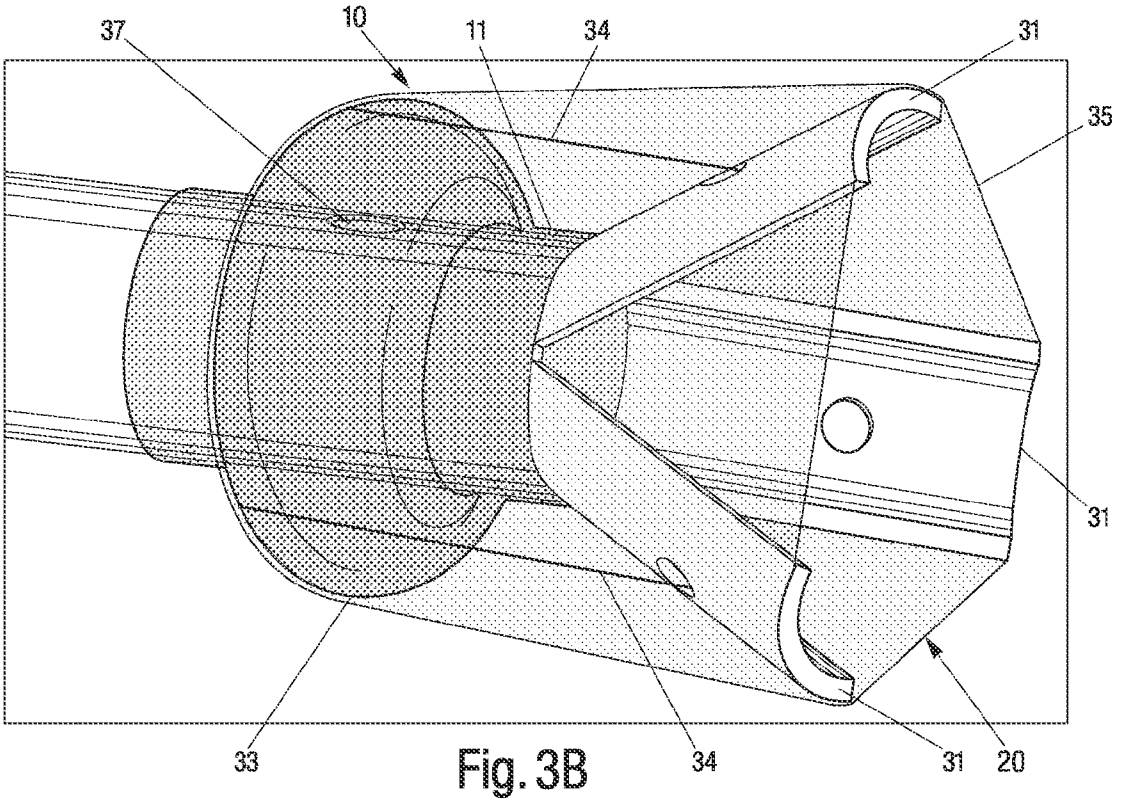

Fig. 3B

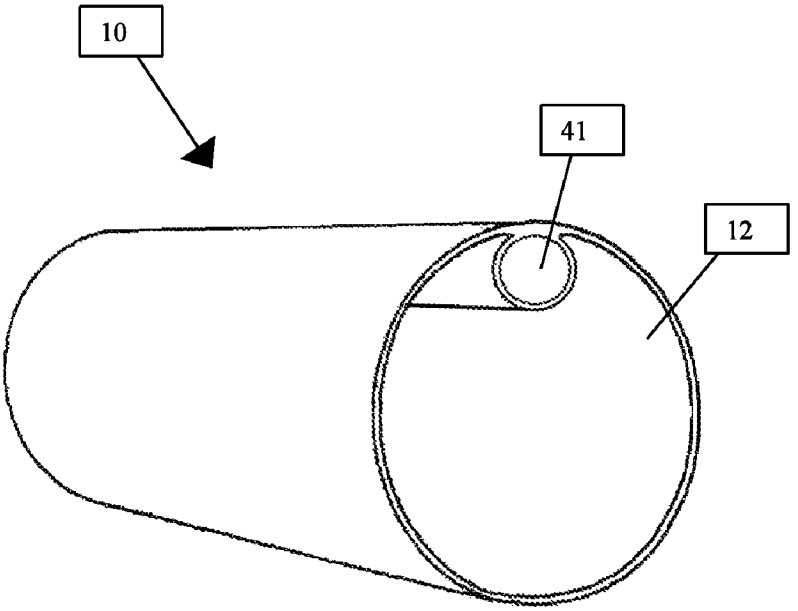

Fig. 4A

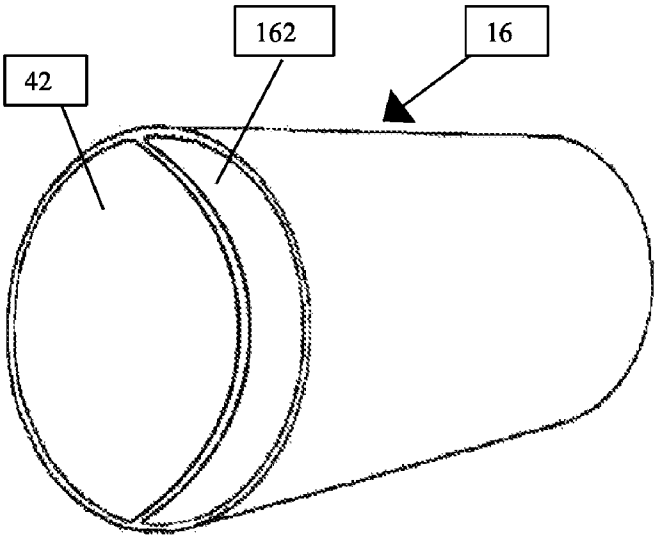

Fig. 4B

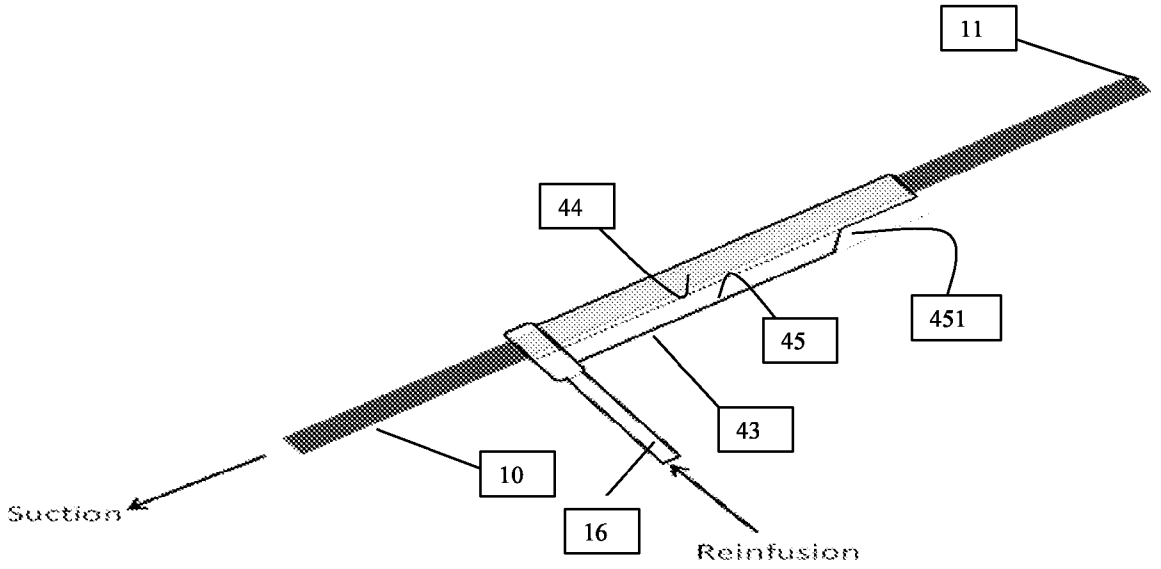
11
44
451
45
43
10
16
Suction
Reinfusion

Fig. 4C

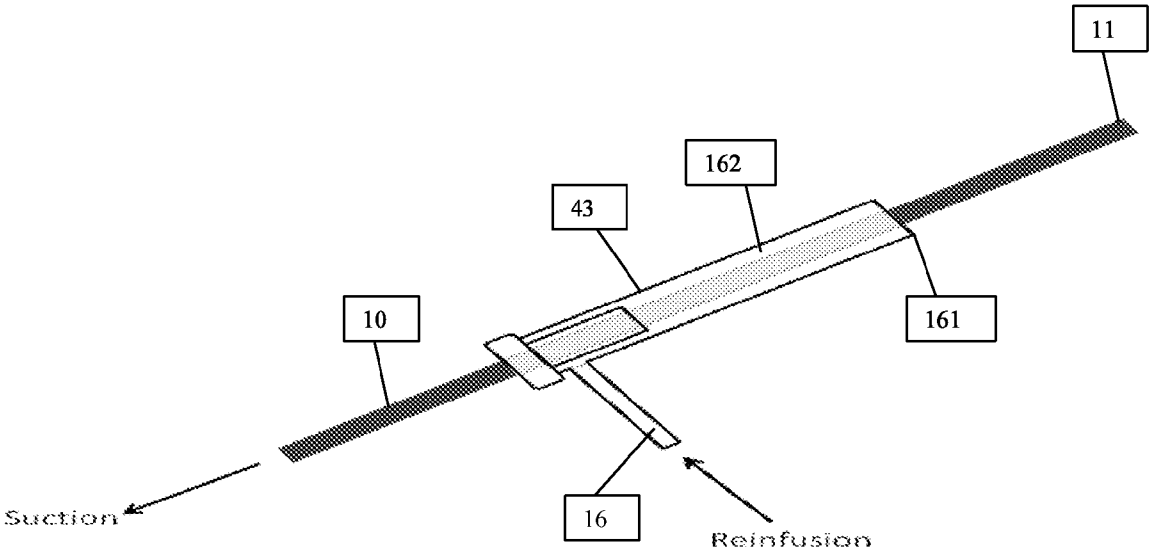
11
162
43
10
161
16
Suction
Reinfusion

Fig. 4D

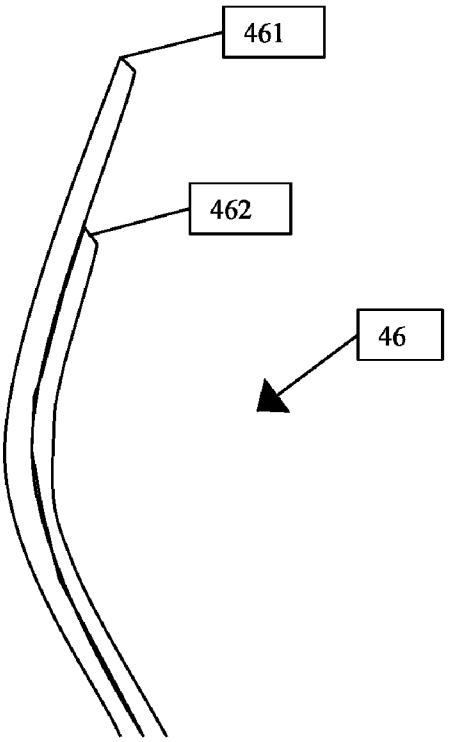

Fig. 4E

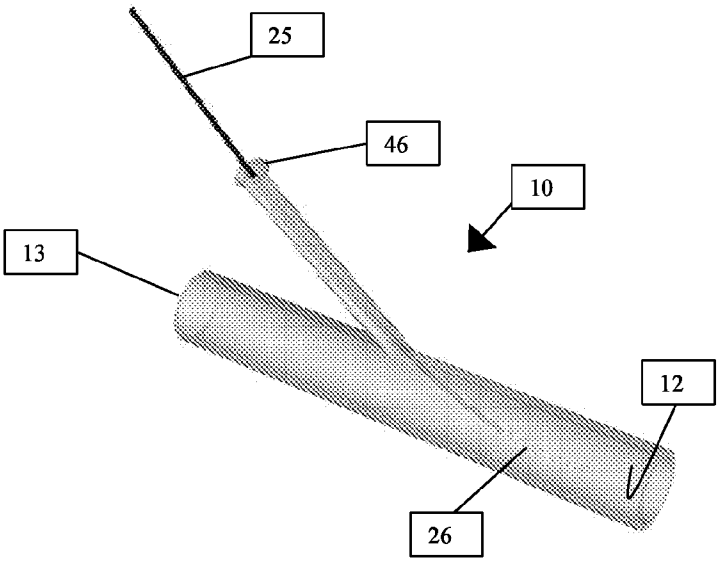

Fig. 5

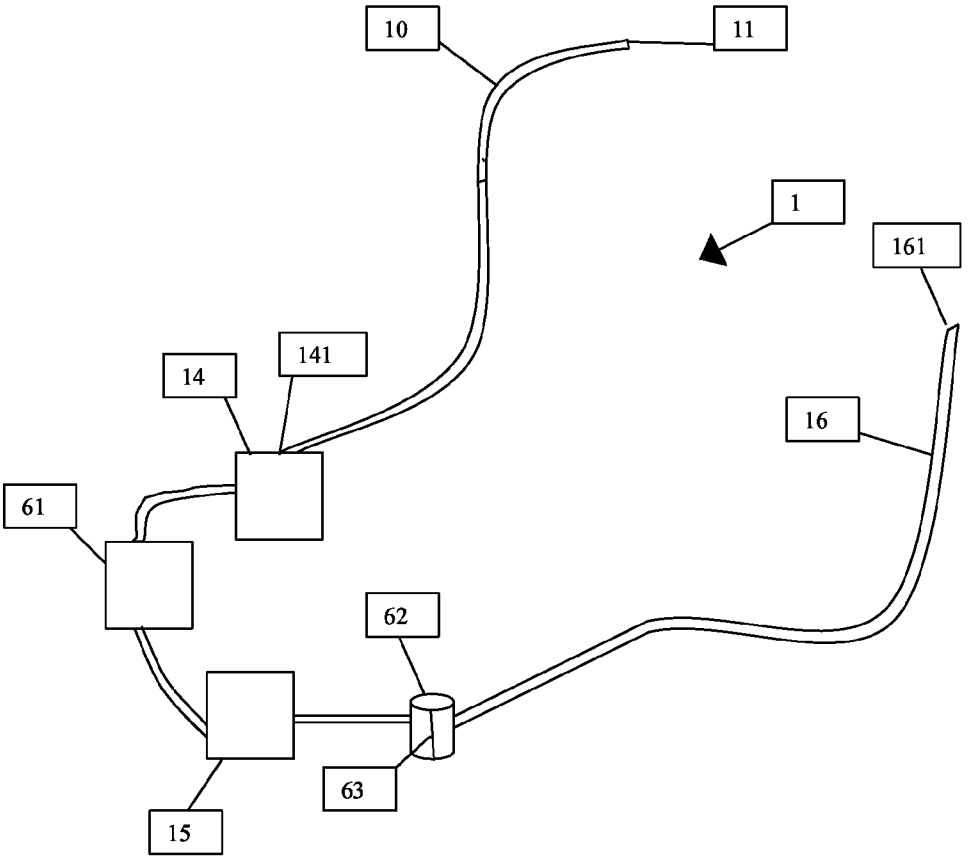

Fig. 6

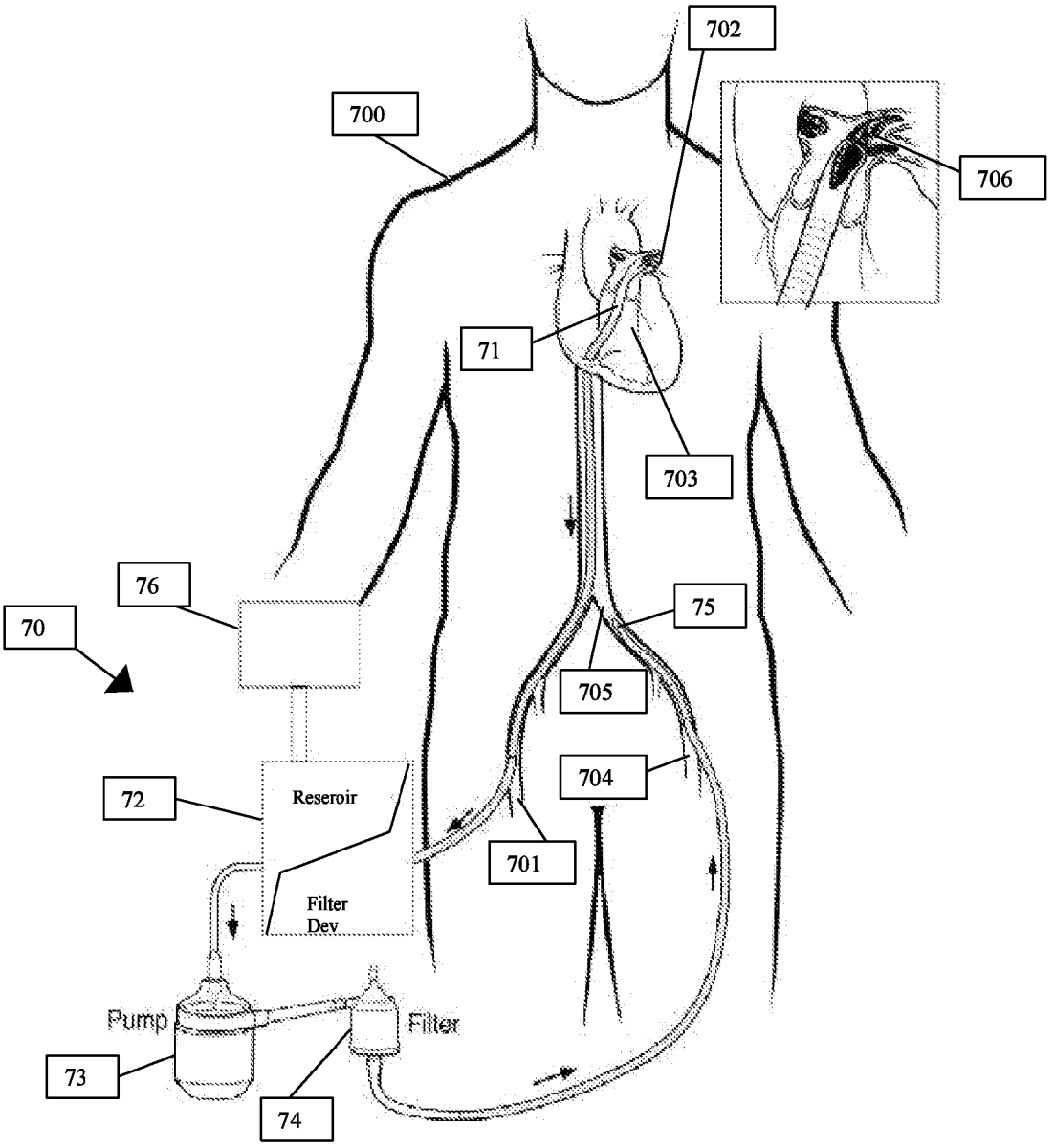
702
700
706
71
703
76
75
70
705
704
72
Reseroir
701
Filter
Dev
Pump
Filter
73
74

Fig. 7

SYSTEMS AND METHODS FOR REMOVING UNDESIRABLE MATERIAL WITHIN A CIRCULATORY SYSTEM

RELATED U.S. APPLICATION(S)

This application claims priority to U.S. Provisional Application Ser. No. 61/015,301 filed on Dec. 20, 2007, which application is hereby incorporated herein by reference.

TECHNICAL FIELD

The present invention relates to systems and methods for removing undesirable materials from a site of interest within the circulatory system. More particularly, the present invention relates to systems and methods for removing substantially en bloc clots, thrombi, and emboli, among others, from within heart chambers, as well as medium to large vessels, while reinfusing fluid removed from the site of interest back into the patient to minimize fluid loss.

BACKGROUND ART

Many of the most common and deadly diseases afflicting mankind result from or in the presence of undesirable material, most notably blood clots, in the blood vessels and heart chambers. Examples of such diseases include myocardial infarction, stroke, pulmonary embolism, deep venous thrombosis, atrial fibrillation, infective endocarditis, etc. The treatment of some of these conditions, which involve smaller blood vessels, such as myocardial infarction and stroke, has been dramatically improved in recent years by targeted mechanical efforts to remove blood clots from the circulatory system. Other deadly conditions, which involve medium to large blood vessels or heart chambers, such as pulmonary embolism (½ million deaths per year) or deep venous thrombosis (2-3 million cases per year) have not benefited significantly from such an approach. Present treatment for such conditions with drugs or other interventions is not sufficiently effective. As a result, additional measures are needed to help save lives of patients suffering from these conditions.

The circulatory system can be disrupted by the presence of undesirable material, most commonly blood clots, but also tumor, infective vegetations, and foreign bodies, etc. Blood clots can arise spontaneously within the blood vessel or heart chamber (thrombosis) or be carried through the circulation from a remote site and lodge in a blood vessel (thromboemboli).

In the systemic circulation, this undesirable material can cause harm by obstructing a systemic artery or vein. Obstructing a systemic artery interferes with the delivery of oxygen-rich blood to organs and tissues (arterial ischemia) and can ultimately lead to tissue death or infarction. Obstructing a systemic vein interferes with the drainage of oxygen-poor blood and fluid from organs and tissues (venous congestion) resulting in swelling (edema) and can occasionally lead to tissue infarction.

Many of the most common and deadly human diseases are caused by systemic arterial obstruction. The most common form of heart disease, such as myocardial infarction, results from thrombosis of a coronary artery following disruption of a cholesterol plaque. The most common causes of stroke include obstruction of a cerebral artery either from local thrombosis or thromboemboli, typically from the heart. Obstruction of the arteries to abdominal organs by thrombosis or thromboemboli can result in catastrophic organ injury, most commonly infarction of the small and large intestine.

Obstruction of the arteries to the extremities by thrombosis or thromboemboli can result in gangrene.

In the systemic venous circulation, undesirable material can also cause serious harm. Blood clots can develop in the large veins of the legs and pelvis, a common condition known as deep venous thrombosis (DVT). DVT arises most commonly when there is a propensity for stagnated blood (long-haul air travel, immobility) and clotting (cancer, recent surgery, especially orthopedic surgery). DVT causes harm by (1) obstructing drainage of venous blood from the legs leading to swelling, ulcers, pain and infection and (2) serving as a reservoir for blood clot to travel to other parts of the body including the heart, lungs (pulmonary embolism) and across a opening between the chambers of the heart (patent foramen ovale) to the brain (stroke), abdominal organs or extremities.

In the pulmonary circulation, the undesirable material can cause harm by obstructing pulmonary arteries, a condition known as pulmonary embolism. If the obstruction is upstream, in the main or large branch pulmonary arteries, it can severely compromise total blood flow within the lungs and therefore the entire body, resulting in low blood pressure and shock. If the obstruction is downstream, in large to medium pulmonary artery branches, it can prevent a significant portion of the lung from participating in the exchange of gases to the blood resulting low blood oxygen and build up of blood carbon dioxide. If the obstruction is further downstream, it can cut off the blood flow to a smaller portion of the lung, resulting in death of lung tissue or pulmonary infarction.

The presence of the undesirable material within the heart chambers can cause harm by obstructing flow or by serving as a reservoir for emboli to other organs in the body. The most common site for obstruction within the heart is in the heart valves. Infective vegetations, a condition known as endocarditis, can cause partial obstruction to flow across a valve before destroying the valve. Patients with prosthetic valves, especially mechanical valves, are particularly prone to valve thrombosis and obstruction. The heart chambers are the most common source of emboli (cardioemboli) to the systemic circulation, including stroke. Emboli tend to arise from areas that are prone to stagnation of blood flow under pathologic conditions. The left atrial appendage in patients with atrial fibrillation is prone to thrombosis, as well as the left ventricular apex in patients with acute myocardial infarction or dilated cardiomyopathy. Infected vegetations or thrombi on the heart valves are also common sources of emboli. Undesirable material such as blood clots and infected vegetations can reside in the chambers of the right heart (atrium and ventricle), often associated with prosthetic material such as pacemaker leads or long-term indwelling catheters.

The most effective treatment for conditions resulting from the presence of blood clots or other undesirable materials within the circulation is, of course, to stabilize or eliminate the material before it has embolized. Alternatively, if obstruction to flow has already occurred but before the obstruction has caused permanent harm (infarction, shock, death), the material can be eliminated by utilizing biologic or mechanical means.

Biologic treatments involve the delivery of agents to the material, which either dissolve the material or, at a minimum, stabilize it until the body can eliminate it. In the case of infective vegetations, antimicrobial agents can, over time, decrease the chances of embolization. In the case of blood clots, the agents include 1) anticoagulant agents (heparin, warfarin, etc.) which prevent propagation of blood clots; and 2) more potent thrombolytic agents (streptokinase, urokinase, tPA, etc,) which actively dissolve clots. The agents are

usually delivered systemically, i.e., into a peripheral or central vein and allowed to circulate throughout the body. Thrombolytic agents can also be delivered through a catheter directly to the blood clot which can increase its effectiveness by increasing local concentrations but this does not completely eliminate the absorption into systemic circulation throughout the body.

Thrombolytic agents have been shown to increase survival in patients with hemodynamically significant pulmonary embolism as documented by echocardiographic evidence of right ventricular strain. The use of thrombolytic agents is the standard of care in this subgroup of patients with a high 20-25% early mortality. They are commonly used in to dissolve clots in other blood vessels including arteries to heart, abdominal organs and extremities.

There are two primary disadvantages to thrombolytic agents. First, every cell in the body is exposed to the agent which can lead to serious and often life threatening bleeding complications in remote areas such as the brain and stomach. The risk of major bleeding complications can be as high as 25% and the risk of often fatal bleeding into the brain can go up to 3%. Second, blood clots undergo a process called organization where the soft gel-like red/purple clot is transformed into a firmer, whitish clot by the cross-linking of proteins such as fibrin. Organized clots are much less amenable to treatment with thrombolytic agents. Thromboemboli, such as pulmonary emboli, can contain a significant amount of organized clot since the thrombus frequently developed at its original site (e.g., the deep veins of the legs) over a long period of time prior to embolizing to the remote site (e.g., the lungs).

Mechanical treatments involve the direct manipulation of the material to eliminate the obstruction. This can involve aspiration, maceration, and compression against the vessel wall, or other types of manipulation. The distinct advantage of mechanical treatment is that it directly attacks the offending material and eliminates the vascular obstruction independent of the specific content of the offending material. Mechanical treatments, if feasible, can usually prove to be superior to biologic treatments for vascular obstruction. Procedural success rates tend to be higher. The best example of this advantage is in the treatment of acute myocardial infarction. Although thrombolytic therapy has had a major impact on the management of patient with myocardial infarction, this option is now relegated to a distant second choice. The clear standard of care today for an acute myocardial infarction is an emergency percutaneous coronary intervention during which the coronary artery obstruction is relieved by aspiration, maceration or balloon compression of the offending thrombus. This mechanical approach has been shown to decrease the amount of damaged heart tissue and improve survival relative to the thrombolytic biological approach.

Mechanical treatment, however, has played a limited role in the removal of blood clots found in larger blood vessels such as pulmonary arteries and heart chambers. Surgical pulmonary embolectomy involves opening the pulmonary artery and removing the offending clot under direct vision. This operation has been performed for nearly 100 years, but did not become practical until the introduction of the heart lung machine. Even then, it was generally relegated to a salvage procedure in moribund patients in whom all other options had been exhausted because of the inherent danger in the surgery and the recovery period. While surgical pulmonary embolectomy is very effective in completely evacuating pulmonary emboli whether soft-fresh and firm-organized clot, it is an invasive procedure.

Recent data has shown that the early outcomes with surgical pulmonary embolectomy are excellent, at least as good as thrombolytic treatment, as long as the procedure is performed in a timely fashion before the patient becomes very ill or suffers a cardiac arrest. The long term outcomes of patients surviving surgical pulmonary embolectomy have always been very good. Although these data have generated a renewed interest in performing surgical pulmonary embolectomy, its use remains limited because of the invasiveness of the procedure. Although minimally invasive approaches have been described, the standard procedure requires a 20-25 cm incision through the sternal bone and placing the patient on cardiopulmonary bypass (the heart-lung machine).

Catheter-based removal of blood clots from larger blood vessels (e.g., pulmonary arteries) and heart chambers has had limited success, at least compared to smaller blood vessels (e.g., coronary arteries). Catheter pulmonary embolectomy, where the pulmonary emboli are removed percutaneously using one of several techniques, has been around for nearly 30 years but few patients currently receive these therapies. These techniques can be subdivided into three categories. With fragmentation thrombectomy, the clot is broken into smaller pieces, most of which migrate further downstream, decreasing the central obstruction but resulting in a "no-reflow" phenomenon. It is sometimes used in combination with thrombolytics which preclude their use as an alternative to thrombolytics. With the rheolytic thrombectomy, high velocity saline jets create a Venturi effect and draw the fragments of the clot into the catheter. Finally the aspiration techniques draw the clot into a catheter via suction. With a Greenfield embolectomy, the catheter with the attached clot is repeatedly drawn out of the vein. All of these techniques rely on catheters which are small compared to the size of the clots and blood vessels. Their limited success is likely related to their inability to achieve a complete en-bloc removal of the material without fragmentation.

The experience with catheter-based treatment of deep venous thrombus has also had limited success. The operator must use relatively small catheters to remove or break up large amounts of well embedded clot. This procedure is therefore time-consuming, inefficient and ultimately not very effective in removal of the whole clot.

It is clear that all of the therapeutic options available to patients with clot or other undesirable material in medium or large blood vessels, such as those with pulmonary embolism, have serious limitations. Anticoagulation only limits propagation of clot, it does not remove it. Thrombolytic therapy is not targeted, carries a real risk of major bleeding, and is not very effective in firm/organized clots. Catheter embolectomy uses technology developed for small blood vessels, does not scale well to material residing in medium and large vessels or heart chambers, and thus is not very effective. Surgical embolectomy is highly effective but highly invasive. There is a real need for a direct mechanical treatment that is as effective as surgical embolectomy but can be performed using endovascular techniques.

Current efforts to apply existing catheter embolectomy technologies to medium to large blood vessels and heart chambers encounter at least two obstacles: fragmentation and excessive blood loss. Techniques which depend on fragmentation of the material tend to be inefficient and ineffective in medium to large blood vessels and heart chambers because the flow of blood will carry a significant portion of the fragmented material away before it can be captured in the catheter. On the other hand, techniques which depend on aspiration of undesirable material will result in excessive blood loss as the size of the catheter increases.

A need therefore exists for a system and method to endovascularly remove undesirable material residing in medium

to large blood vessels and heart chambers with minimal fragmentation and without excessive blood loss.

SUMMARY OF THE INVENTION

The present invention relates generally to systems and methods for removing undesirable material residing in vessels, such as blood vessels, or within chambers of the heart. More specifically, the subject invention relates to systems and methods for using a cannula to remove substantially en bloc, from a site of obstruction or interest, an undesirable material, such as blood clots, embolisms and thromboembolisms, without significant fragmentation and without excessive fluid loss. In addition, the systems and methods of the present invention may simultaneously reinfuse aspirated (i.e., removed) and filtered fluid, such as blood, back into the patient on a substantially continuous basis to minimize any occurrences of fluid loss and/or shock. The subject invention may be particularly useful, but may not be limited to, the removal of blood clots, tumors, infective vegetations and foreign bodies from medium to large blood vessels and heart chambers.

In one embodiment, a system for removing an undesirable material from within a vessel is provided. The system includes a first cannula having a distal end and an opposing proximal end. The distal end of the first cannula, in an embodiment, may include or may be deployable to a diameter relatively larger than that of the proximal end. The first cannula may be designed for maneuvering within the vessel to a site of interest, such that an undesirable material can be captured substantially en bloc through the distal end and removed along the first cannula away from the site. The system may also include a pump, in fluid communication with the proximal end of the first cannula, so as to provide a sufficient suction force for removing the undesirable material from the site of interest. The system may further include a second cannula in fluid communication with the pump, so that fluid removed from the site of interest by the first cannula can be directed along the second cannula and reinfused through a distal end of the second cannula. In one embodiment, the distal end of the second cannula may be situated in spaced relation to the distal end of the first cannula. The system may also be provided with a filter device positioned in fluid communication with the first cannula. The filter device, in an embodiment, may act to entrap or capture the undesirable material and remove it from the fluid flow. The system may further be provided with a reservoir in fluid communication with the filter device. The reservoir may act to transiently collect fluid being directed from the filter device and to provide a source of fluid for reinfusion by the second cannula. A second filter may also be included in fluid communication between the pump and the second cannula, so as to remove, prior to reinfusion, any debris that may have escaped from the filter device from the fluid flow.

In another embodiment, there is provided a method for removing an undesirable material from within a vessel. The method includes initially maneuvering a first cannula having a distal end and an opposing proximal end to a site of interest within the vessel, such that the distal end of the first cannula is positioned adjacent the undesirable material. Next, a second cannula, in fluid communication with the first cannula, may be positioned such that its distal end can be situated in spaced relation to the distal end of the first cannula. Thereafter, a suction force may be provided through the distal end of the first cannula to the site of interest, so as to remove, through the distal end of the first cannula, the undesirable material substantially en bloc from the site of interest. Subsequently, any fluid removed along with the undesirable material may be reinfused, through the distal end of the second cannula, to a location in spaced relation from the distal end of the first cannula. The suction and reinfusion of blood can occur, in an embodiment, continuously for a desired duration to minimize fluid loss in the patient. Alternatively, the step of suctioning an undesirable material can occur at an intermittent pulse for a desired duration following reinfusion of the removed fluid.

In a further embodiment, an apparatus for removing an undesirable material from within a vessel is provided. The apparatus includes an elongated tube having a distal end through which an undesirable material can be captured, a pathway extending along the tube to provide a passage for transporting the undesirable material from the distal end, and a proximal end in opposing relations to the distal end through which the undesirable material can exit. The apparatus also includes a funnel situated at the distal end of the tube, and designed for deployment between an flared open position and a collapsed closed position, so as to better engage and capture the undesirable material. The apparatus further includes a mechanism positioned about a distal portion of the tube, which mechanism, upon actuation, can deploy the funnel between the closed position and the open position. In one embodiment, the funnel includes a plurality of strips, with each strip being pivotally coupled at one end to the distal end of the tube. The funnel may also include a substantially impermeable membrane extending across a space between adjacent strips, such that the membrane, in connection with the strips define the shape of the funnel. The mechanism, in an embodiment, includes a balloon positioned circumferentially about the tube at a location proximal to the funnel, and an attachment mechanism provided with one end attached to the funnel and an opposite end attached to the balloon. By design, upon expansion of the balloon, the attachment mechanism can pull on the funnel to deploy it into a flared open position. The apparatus may also include a jacket positioned circumferentially about the distal end of the tube, and extending from the funnel to the balloon to protect the vessel from potential irritation that may be caused by the balloon and the strips defining the funnel. As the jacket may be attached to the funnel and the balloon, in one embodiment, the jacket may act as the mechanism for deploying the funnel into a flared open position upon expansion of the balloon.

BRIEF DESCRIPTION OF THE DRAWINGS

These and other features and advantages of the present invention will become more apparent from the following detailed descriptions taken in conjunction with the accompanying drawings wherein like reference characters denote corresponding parts throughout the several views.

FIG. **1** illustrates system for removing an undesirable material from within a vessel in accordance with one embodiment of the present invention.

FIGS. **2**A-H illustrate a distal end of a suction cannula in operation in connection with the system shown in FIG. **1**.

FIGS. **3**A-B illustrate an alternate distal end of a suction cannula used in connection with the system shown in FIG. **1**.

FIGS. **4**A-E illustrate a variety of cannulas for use in connection with the system shown in FIG. **1**.

FIG. **5** illustrates a port through which another device may be introduced within a suction cannula used in connection with the system shown in FIG. **1**.

FIG. **6** illustrates a system for removing an undesirable material from within a vessel in accordance with another embodiment of the present invention.

FIG. **7** illustrates a system of the present invention being deployed within a patient for removing an undesirable material from a site of interest.

DETAILED DESCRIPTION OF SPECIFIC EMBODIMENTS

As noted above, existing catheter techniques may not be effective in removing undesirable material, such as clots, from medium and large size blood vessels or from heart chambers, because these catheters tend to be small relative to the material to be removed. As a result, the material often needs to be fragmented in order to fit within the catheter. However, with fragmentation, the chances of the fragments being carried away in the bloodstream increases, resulting in downstream obstruction. If the catheter is enlarged to accommodate the larger structure and material, such a catheter may aspirate an unacceptable volume of blood, resulting in excessive fluid loss and/or shock in the patient.

The present invention overcomes the deficiencies of existing devices and techniques and can act to remove substantially en bloc (i.e., wholly or entirely) undesirable material, such as thrombi and emboli, from the vasculature, including medium to large size blood vessels, and from heart chambers. Vessels from which the undesirable material may be removed, in accordance with an embodiment of the present invention, include, for example, those within the pulmonary circulation (e.g., pulmonary arteries), systemic venous circulation (e.g., vena cavae, pelvic veins, leg veins, neck and arm veins) or arterial circulation (e.g., aorta or its large and medium branches). The heart chambers may be, for example, in the left heart (e.g., the left ventricular apex and left atrial appendage), right heart (e.g., right atrium and right ventricle), or on its valves. The present invention can also act to remove tumors, infective vegetations and other foreign.

Although reference is made to medium and large vessels, it should be appreciated that the systems and methods, hereinafter disclosed, can be scaled and adapted for use within smaller vessels within the body, if desired.

Referring now to FIG. **1**, there is illustrated a system **1** for removing an undesirable material, substantially en bloc, from an obstruction site or site of interest within the vasculature, and for reinfusion of fluid removed (i.e., suctioned or aspirated) from the site of interest back into a patient, in order to minimize fluid loss within the patient. System **1**, in an embodiment, may be provided with a first or suction cannula **10** for capturing and removing en bloc the undesirable material from the site of interest, such as that within a blood vessel or a heart chamber. Cannula **10**, in an embodiment, may be an elongated tube and may include a distal end **11** through which the undesirable material can be captured and removed. Cannula **10** may also include a lumen or pathway **12** extending along a body portion of cannula **10**. Pathway **12**, in one embodiment, provides a passage along which the captured material and aspirated circulatory fluid, such as blood, that may be captured therewith may be transported and directed away from the site of interest. Cannula **10** may further include a proximal end **13** in opposing relations to the distal end **11**, and through which the captured material may exit from the cannula **10**.

Since cannula **10** may be designed for introduction into the vasculature, for instance, through a peripheral blood vessel, and may need to subsequently be maneuvered therealong to the site of interest, cannula **10**, in an embodiment, may be made from a pliable material. In addition, as cannula **10** may be used to introduce a suction force to the site of interest for capturing the undesirable material, cannula **10** may be made from a sufficiently stiff material or may be reinforced with a sufficiently stiff material, so as not to collapse under a suction force. In one embodiment, cannula **10** may be constructed from a biocompatible material, such as polyvinyl chloride, polyethylene, polypropylene, polyurethane, polyether block amide (Pebax®), silicone, or a combination thereof.

In certain instances, it may be desirable to maneuver cannula **10** to the site of interest using image guidance, for example, using fluoroscopy or echocardiography. In order to permit cannula **10** to be visualized, cannula **10**, in an embodiment, may also include a radioopaque material or any material capable of being visualized.

To better engage and capture the undesirable material substantially en bloc and without significant fragmentation, the distal end **11** of cannula **10** may be designed to have a diameter that can be relatively larger than that of the proximal end **13**. In one embodiment, as illustrated in FIGS. **2**A-D, distal end **11** of cannula **10** may be in the shape of a funnel **20**, and may be provided with a diameter, for example, approximately at least three times that of pathway **12**. Of course, depending on the surgical procedure being implemented, the ratio between the diameter of funnel **20** and pathway **12** can be varied, if so desired. Funnel **20**, with its design, may be placed directly at a site of interest **23** to engage undesirable material **24** (FIG. **2**C), or spatially away from the site of interest **23** to capture the undesirable material **24** (FIG. **2**D). In a situation where the distal end **11** may be situated spatially away from the site of interest, by providing distal end **11** with funnel **20**, a vortex effect may be generated during suctioning to better direct the undesirable material into the funnel **20**. It is believed that fluid flowing into funnel **20** can often exhibit a laminar flow circumferentially along the interior surface of the funnel **20** to generate a vortex flow into the distal end **11** of suction cannula **10**. Thus, in the presence of a vortex flow, such a flow can act to direct the undesirable material toward the distal end **11** to allow the material to subsequently be pulled into the distal end by suctioning.

To provide a funnel shaped distal end, cannula **10** may include, in an embodiment, a sheath **21** circumferentially situated about distal end **11** of cannula **10**. Sheath **21**, as illustrated, may be designed to slide toward as well as away from the distal end **11** of cannula **10**. In that way, when the distal end **11** is positioned at the site of interest **23**, and sheath **21** is retracted (i.e., slid away from the distal end **11**), funnel **20** may be exposed and expanded into the desired shape in order to engage undesirable material **24**. To collapse funnel **20**, sheath **21** may be advanced toward the distal end **11** and over the funnel **20**. Thereafter, cannula **10** may be maneuvered from the site of interest **23**.

In order to enhance capture and removal of the undesirable material **24**, looking now at FIGS. **2**E-G, cannula **10** may be designed to allow introduction of a catheter **25** with balloon **26** to the site of interest. In an example where the undesirable material **24** may be entrapped within funnel **20**, catheter **25** with balloon **26** may be directed along the lumen or pathway **12** of cannula **10** and into funnel **20**. Once catheter **25** has been advanced past the undesirable material **24** within funnel **20**, balloon **26** may be inflated to a size sufficient to pull on the undesirable material entrapped within funnel **20**. As balloon **26** is pulled down the funnel **20** towards pathway **12**, balloon **26** can dislodge the entrapped material and can eventually partially or substantially occlude a pathway **12**, distal to the undesirable material **24**, which in essence occludes the fluid communication between cannula **10** and the vessel. The suction force within pathway **12**, as a result, can be enhanced to better remove the undesirable material. Similarly, as shown in FIG. **2**H, in a situation where undesirable material **24** may be

firmly lodged in the vessel at the site of interest **23** and the suction applied by cannula **10**, spatially situated away from the site of interest **23**, may insufficient to dislodge the undesirable material **24**, catheter **25** and balloon **26** may be advanced past the distal end of cannula **10** and past the undesirable material **24** at the site of interest **23**. Once past the undesirable material **24** the balloon **26** may be inflated and as balloon is withdrawn back towards the distal end **11** of cannula **10**, it can dislodge the undesirable material and allow the suction to draw it into the distal end of cannula **10**. Of course, this approach can also be applied when cannula **10** is situated directly at the site of interest **23** and the suction force may be insufficient to dislodge the undesirable material **24**.

In another embodiment, looking now at FIGS. **3**A-B, funnel **20** located at distal end **11** of cannula **10** may be created by providing a plurality of independent strips **31**, each coupled at one end to distal end **11** of cannula **10**. In the embodiment shown in FIG. **3**A, three strips **31** are illustrated. However, it should be appreciated that two or more strips **31** may be used, if so desired. Strips **31**, in an embodiment, may be designed to pivot between a closed position, where strips **31** may be substantially adjacent one another, and an open position, where strips may be flared into a funnel **20**, shown in FIG. **3**A. To deploy strips **31**, and thus funnel **20**, between an open and closed position, cannula **10** may include a balloon **33** positioned circumferentially about cannula **10** and proximal to strips **31**. In addition, an attachment mechanism, such as a string **34** or any similar mechanisms (e.g., rod, chain etc.), may be provided for each of the strips **31**, with one end attached to one strip **31** and an opposite end attached to balloon **33**. In this way, when balloon **33** is inflated and expands radially, balloon **33** may pull on each attachment mechanism **34**, so as to deploy strips **31** into a flared open position. Balloon **33**, in one embodiment, may be inflated through opening **37** through the use of any fluid, including water, air, or radioopaque contrast material. It should be noted that securing of the attachment mechanism to the strips **31** and balloon **33** can be accomplished using any methods or mechanisms known in the art. For instance, adhesives, knots, or soldering etc. may be used. Moreover, to the extent desired, strips **33** and balloon **31** may be designed to expand to a diameter larger than that of the vessel within which cannula **10** is being deployed. In that way, cannula **10** may be securely positioned at the site of interest for removal of the undesirable material substantially en bloc.

To better capture the undesirable material and direct it into the cannula **10**, a membrane **35** may be placed across a space between adjacent strips **31** when the strips **31** are in the open position. In one embodiment, a continuous membrane **35** may be used to circumferentially stretch across each of the space between adjacent strips **31**. Membrane **35** may also act to enhance suction at the site of interest, as it can cover up any open space between the strips **31**. To that end, membrane **35**, in an embodiment, may be made from a non-permeable material. It should be appreciated that membrane **35** and strips **31**, as illustrated, together define funnel **20** at distal end **11** of cannula **10**.

Furthermore, to protect the vessel from irritation or damage that may be caused by the presence of balloon **33** and/or strips **31**, jacket **36**, as shown in FIG. **3**B, may be provided circumferentially about the distal **11** of cannula **10**. In an embodiment, jacket **36** may extend substantially from a tip of each strip **31** to balloon **33**. Jacket **36**, however, can be affixed anywhere along each strip **31**, if necessary. Since jacket **36** attaches at one end to strips **31** and at an opposite end to balloon **33**, jacket **36**, in an embodiment, may be used instead of attachment mechanism **34** to deploy strips **31** into an open position when balloon **33** is expanded. Of course, jacket **36** may also be used in conjunction with attachment mechanism **34** to deploy strips **31** into an open position. Furthermore, in one embodiment, jacket **36** may be lengthened, so that the end connected to strips **31** may instead be pulled over strips **31**, into funnel **20**, and attached substantially to a base of each strips **31** (i.e., base of funnel **20**). With such a design, membrane **35** may not be necessary, as jacket **36** may serve the purpose of membrane **35** to cover the space between each of strips **31**. In such an embodiment, at least that portion of jacket **36** extending over strips **31** and into the base funnel **20** can be impermeable.

In certain instances, balloon **33** may act to enhance the suction force being applied at the site of interest when removing the undesirable material. For instance, when cannula **10** is deployed downstream of the undesirable material, rather than substantially adjacent to the undesirable material, within a vessel having a venous circulation (i.e., flow toward the heart), balloon **33**, when expanded radially, can substantially occlude the vessel, such that collateral fluid flow within the vessel can be minimized, thereby increasing the suction force that can be applied to the undesirable material. Additionally, the occlusion of such a vessel by balloon **33** can better direct the material being removed into the funnel **20** and prevent the material from being carried by the flow of blood past the funnel.

Alternatively, when cannula **10** is deployed upstream of the undesirable material within a vessel having an arterial circulation (i.e., flow away from the heart), rather than substantially adjacent to the undesirable material, balloon **33**, when expanded radially, can substantially occlude the vessel, such that pressure being exerted on the downstream material by the fluid flow can be lessened. By lessening the pressure on the material to be removed, the suction force being applied at the site of interest can act to remove the material more easily.

As suction cannula **10** may be made from a pliable material, in order to efficiently direct it along a vessel to the site of interest, cannula **10** may be reinforced with wire or other material to optimize maneuverability within the vessel without kinking. Referring now to FIG. **4**A, suction cannula **10** may, in addition to pathway **12**, be provided with one or more additional pathway or lumen **41**. In this multi-lumen design, pathway **12** may act, as noted above, to provide a passage along which the captured material may be transported and directed away from the site of interest. Lumen **41**, on the other hand, can provide a passage along which a fluid can be directed to inflate balloon **33** through opening **37** (FIGS. **3**A-B). In certain embodiments, lumen **41** may also be used to accommodate other devices, such as other catheters or surgical instruments, for use in connection with a variety of purposes. For example, a device may be inserted and advanced along lumen **41** through the distal end **11** of suction cannula **10** to dislodge the undesirable material. An angiography catheter can be inserted and advanced along lumen **41** through the distal end **11** of suction cannula **10** to perform an angiogram to confirm the location of the undesirable material or confirm that it has been successfully removed. A balloon embolectomy catheter can be inserted along lumen **41** toward the distal end **11** of suction cannula **10** to remove any material which may have clogged the cannula or past the any undesirable material firmly lodged in the vessel to draw it into the cannula. Although illustrated with such a multi-lumen design, any other multi-lumen design may be possible.

To introduce other devices, such as catheter **25** with balloon **26**, into lumen **41** or pathway **12**, cannula **10** may be provided with a port **51**, as shown in FIG. **5**, located at the proximal end **13** of cannula **10**. It should be appreciated that

in the embodiment where cannula **10** has only pathway **12** (i.e., single lumen cannula), port **51** may similarly be provided at the proximal end **13** of cannula **10** to allow the introduction of other devices into pathway **12**.

Cannula **10** of the present invention may be of any sufficient size, so long as it can be accommodated within a predetermined vessel, such as a medium to large size blood vessel. The size of cannula **10** may also be determined by the size of the undesirable material to be removed, so long as the undesirable material can be removed substantially en bloc without significant fragmentation. In one embodiment, suction cannula **10** may be designed to remove at least 10 cm^3 of undesirable material substantially en bloc. Of course, cannula **10** can be scaled and adapted for use within smaller vessels in the body and for removing a relatively smaller volume or amount undesirable material, if so desired.

Looking again at FIG. **1**, system **1** can also include filter device **14** in fluid communication with the proximal end **13** of cannula **10**. Filter device **14**, in one embodiment, may include an inlet **141** through which fluid removed from the site of interest along with the captured undesirable material can be directed from cannula **10**. Filter device **14** may also include an outlet **142** through which filtered fluid from within device **14** may be directed downstream of system **1**. To prevent the undesirable material captured from the site of interest from moving downstream of system **1**, filter device **14** may further include a permeable sheet **143** positioned within the fluid flow between the inlet **141** and the outlet **142**.

Permeable sheet **143**, in an embodiment, may include a plurality of pores sufficiently sized, so as to permit fluid from the site of interest to flow therethrough, while preventing any undesirable material captured from the site of interest from moving downstream of system **1**. Examples of permeable sheet **143** includes coarse netting, fine netting, a screen, a porous filter, a combination thereof, or any other suitable filter material capable of permitting fluid to flow through while impeding movement of the captured undesirable material. It should be noted that, rather than just one, a plurality of permeable sheets **143** may be used. Alternatively, one permeable sheet **143** may be folded to provide multiple surfaces, similar to an accordion, for use in connection with filter device **14**. By using a plurality of permeable sheets **143** or by folding sheet **143**, the number of filtration surfaces through which the fluid must flow increases to enhance filtration and further minimize any occurrence of any undesirable material from moving downstream of system **1**.

Although a permeable sheet **143** is described, it should be appreciated that filter device **14** may be of provided with any design capable of entrapping the undesirable material, while allowing fluid to move therethrough. To that end, filter device **14** may include a mechanical trap to remove the undesirable material from the fluid flow. Such a mechanical trap may be any trap known in the art and may be used with or without permeable sheet **143**.

Still looking at FIG. **1**, system **1** may also be provided with a pump **15** designed to generate negative pressure, so as to create a necessary suction force through cannula **10** to pull any undesirable material from the site of interest. In one embodiment, pump **15** may include an intake port **151** in fluid communication with outlet **142** of filter device **14**. Intake port **151**, as illustrated, may be designed to receive filtered fluid from filter device **14**. Pump **15** may also be designed to generate the positive pressure, so as to create a necessary driving force to direct fluid through exit port **152** and downstream of system **1** for reinfusion of fluid removed from the site of interest back into the body. In an embodiment, the suction force and the drive force may be generated by pump **15** simultaneously and may take place continuously or intermittently for a set duration. Pump **15**, as it should be appreciated, may be any commercially available pump, including those for medical applications and those capable of pumping fluids, such as blood. Examples of such a pump includes a kinetic pump, such as a centrifugal pump, and an active displacement pump, such as a rollerhead pump.

In an alternate embodiment, an independent vacuum device (not shown), may be provided for generating the necessary suction force at the site of interest, while a pump **15** may act to generate the necessary driving force for reinfusion purposes. In such an embodiment, pump **15** may be in fluid communication with the filter device **14**, while the vacuum device may be in fluid communication with suction cannula **10** upstream to the filter device **14**. The independent pump **15** and vacuum device may operate intermittently for a set duration, and if desired, either the vacuum device or pump **15** may operate continuously, while the other operates intermittently.

Downstream of pump **15**, system **1** may further include a second or reinfusion cannula **16** in fluid communication with the exit port **152** of pump **15**. Reinfusion cannula **16**, in an embodiment, may be designed to permit filtered fluid, directed from filter device **14** by way of pump **15**, to be reinfused back into a patient at a desired site. To that end, reinfusion cannula **16** may be designed for placement within the same or different vessel within which suction cannula **10** may be located.

Reinfusion cannula **16**, in one embodiment, may be an elongated tube and includes a distal end **161** through which cleansed or filtered fluid can be reinfused back into the body. In an embodiment, distal end **161** of reinfusion cannula **16** may be designed so that it can be situated in spaced relation to the distal end **11** of the suction cannula **10** when system **1** is in operation. Reinfusion cannula **16** may also include a lumen or pathway **162** extending along its body portion to provide a passage along which the filtered fluid, such as blood, may be transported to a reinfusion site. Reinfusion cannula **16** may further include a proximal end **163** in opposing relations to the distal end **161**, and through which the filtered fluid from pump **15** may enter into the cannula **16**.

Furthermore, similar to suction cannula **10**, since reinfusion cannula **16** may be designed for introduction into the vasculature, and may need to be maneuvered therealong, reinfusion cannula **16**, in one embodiment, may be made from a pliable material. In one embodiment, reinfusion cannula **16** may be constructed from a biocompatible material, such as polyvinyl chloride, polyethylene, polypropylene, polyurethane, Pebax®, silicone, or a combination thereof. In certain instances, it may be desirable to maneuver reinfusion cannula **16** to the reinfusion site using image guidance, for example, using fluoroscopy or echocardiography. To permit reinfusion cannula **16** to be visualized, reinfusion cannula **16**, in an embodiment, may also be made to include a radioopaque material.

Since reinfusion cannula **16** may be made from a pliable material, in order to efficiently direct it along a vessel to the reinfusion site, reinfusion cannula **16** may be reinforced to optimize maneuverability within the vessel without kinking. Moreover as shown in FIG. **4**B, reinfusion cannula **16** may be provided with one or more additional lumens. With a multi-lumen design, lumen **162**, as noted above, may act to provide a passage along which the filtered fluid may be transported and directed to the reinfusion site. Lumen **42**, on the other hand, can provide a passage through which a guide wire can be inserted to assist in the guiding the reinfusion cannula **16** to the reinfusion site, or through which other instruments and devices may be inserted for various surgical procedures. With

such a multi-lumen design, reinfusion cannula **16** can serve as an introducer sheath by providing lumen **42** through which these instruments can pass, while filtered blood can be reinfused through lumen **162**. Although illustrated with such a multi-lumen design, any other multi-lumen design may be possible.

Although illustrated as a separate component from suction cannula **10**, in certain embodiments, the reinfusion cannula **16** may be designed to be substantially integral with suction cannula **10**. In one embodiment, as illustrated in FIG. **4**C, reinfusion cannula **16** may be incorporated as part of a double or multi-lumen introducer sheath **43** for insertion into the same vessel within which the suction cannula **10** may be situated. In particular, suction cannula **10** may be inserted and maneuvered through one lumen **44** of sheath **43**, while reinfusion cannula **16** may be in fluid communication with lumen **45** of sheath **43**. In such an embodiment, lumen **45** may include a distal end **451** in spaced relations to the distal end **11** of cannula **10**, so that cleansed or filtered fluid may be introduced to the reinfusion site away from the site of interest where the distal end **11** of cannula **10** may be positioned.

Alternatively, as illustrated in FIG. **4**D, reinfusion cannula **16** may be incorporated as part of a double or multi-lumen introducer sheath **43** where the reinfusion cannula **16** and the suction cannula **10** may be concentrically aligned along a shared axis A. In the embodiment shown in FIG. **4**D, reinfusion cannula **16** may have a diameter that can be relatively larger than that of suction cannula **10**. To that end, reinfusion cannula **16** can accommodate suction cannula **10** within pathway **162** of the reinfusion cannula **16**, and allow suction cannula **10** to extend from within pathway **162**, such that the distal end **11** of suction cannula **10** may be positioned in spaced relations relative to the distal end **161** of reinfusion cannula **16**. The spaced relations between distal end **161** and distal end **11** allows filtered fluid to be introduced to the reinfusion site away from the site of interest, where the removal of the undesirable material may be occurring.

In another embodiment, reinfusion cannula **16** and suction cannula **10** can be integrated into a single multi-lumen suction-reinfusion cannula **46**, as shown in FIG. **4**E. In the embodiment shown in FIG. **4**E, multi-lumen cannula **46** may include a distal suction port **461** through which undesirable material from the site of interest can be removed, and a proximal reinfusion port **462** through which cleansed or filtered fluid may be reinfused back into the body. The spaced relations between the suction port **461** and reinfusion port **462** allows filtered fluid to be introduced to the reinfusion site away from the site of interest where the removal of the undesirable material may be occurring.

In an embodiment, the size of the reinfusion cannula, whether independent from the suction cannula, part of a multi-lumen introducer sheath, part of a multi-lumen combined suction-reinfusion cannula, or in concentric alignment with the suction cannula, may be designed so that it can handle a relatively rapid reinfusion of large volumes of fluid by pump **15**.

With reference now to FIG. **6**, system **1** may also include a reservoir **61**. Reservoir **61**, in one embodiment, may be situated in fluid communication between filter device **14** and pump **15**, and may act to transiently collect fluid filtered from the site of interest, prior to the filtered fluid being directed into reinfusion cannula **16**. By providing a place to transiently collect fluid, reservoir **61** can allow the rate of suctioning (i.e., draining, aspirating) to be separated from rate of reinfusing. Typically, the rate of reinfusion occurs at substantially the same rate of suctioning, as the volume of fluid suctioned from the site of interest gets immediately directed along the system **1** and introduced right back to the reinfusion site in a patient. However, the availability of a volume of transiently collected fluid in reservoir **61** now provides a source from which the amount or volume of fluid being reinfused back into the patient can be adjusted, for example, to be less than that being suctioned from the site of interest, as well as the rate at which fluid can be reinfused back into the patient, for example, at a relatively slower rate in comparison to the rate of suctioning. Of course, if so desired or necessary, the reinfusion rate and volume can be adjusted to be higher, relative to the rate and volume of suction.

In accordance with one embodiment of the present invention, reservoir **61** may be a closed or an open container, and may be made from a biocompatible material. In an embodiment where reservoir **61** may be a closed container, system **1**, likewise, will be a closed system. As a result, pump **15** may be used as both a suction source and a driving force to move fluid from the site of interest to the reinfusion site. In such an embodiment, pump **15** can generate a suction force independently of or alternately with a driving force to allow reservoir **61** collect filtered fluid from filter device **14**. In one embodiment, pump **15** may be provided with a gauge in order to measure a rate of flow of the fluid being reinfused.

Alternatively, where reservoir **61** may be an open container, reservoir **61**, in such an embodiment, may be designed to accommodate both a volume of fluid, typically at the bottom of reservoir **61**, and a volume of air, typically at the top of reservoir **61**, to provide an air-fluid interface within reservoir **61**. As a result, using pump **15** in fluid communication with reservoir **61** may not provide the needed driving force and/or suction force to adequately remove the undesirable material and to subsequent reinfuse fluid back into a patient. To address this, system **1**, in an embodiment, may include a separate and independent vacuum source, in fluid communication with the volume of air at the top of reservoir **61**, for providing the necessary suction force from the top area of reservoir **61** where air exists, through filter device **14**, through the distal end **11** of cannula **10**, and to the site of interest. A port provided above the fluid level within reservoir **61** may be provided to allow the independent vacuum source to be in fluid communication with the volume of air within reservoir **61**. Pump **15**, on the other hand, may be in fluid communication with the volume of fluid within reservoir **61**, and may act to generate the necessary driving force for reinfusion purposes.

It should be appreciated that although shown as separate components, to the extent desired, reservoir **61** and filter device **14** may be combined as a single unit.

Still referring to FIG. **6**, system **1** may further include a second filter device **62** positioned in fluid communication between pump **15** and reinfusion cannula **16**. Second filter device **62** may act to remove any debris or material (e.g., ranging from smaller than microscopic in size to relatively larger) that may have escaped and moved downstream from filter device **14**, so that the fluid may be substantially cleansed prior to reinfusion. In an embodiment, second filter device **62** may include a porous membrane **63** whose pores may be measurably smaller than that in filter device **14**, but still capable of allowing fluid to flow therethrough.

Since fluid such as blood needs to be filtered through system **1**, it should be noted that system **1** and its components may be made from a biocompatible material to minimize any adverse reaction when fluid removed from the site of interest gets reinfused back into the body.

In operation, system **1** of the present invention may be introduced into the vasculature, preferably through a peripheral blood vessel, to remove undesirable material, such as a

clot, emboli, or thrombi, substantially en bloc and without significant fragmentation, and subsequently reinfusing fluid removed from the site of interest back into a patient. In particular, system **1** and its components disclosed above can collectively form a substantially closed circuit through which fluid and an undesirable material from a site of interest can be removed by suction, cleared of the undesirable material, filtered to remove any additional debris, and actively introduced back into a patient at a reinfusion site.

With reference now to FIG. **7**, there is shown one embodiment of the system of the present invention being utilized for removal of an undesirable material within a patient **700**. System **70**, as illustrated, includes a suction cannula **71**, filter device **72**, pump **73**, second filter device **74** and reinfusion cannula **75**. It should be appreciated that depending on the procedure and to the extent desired, system **70** may not need all of the components shown, or may need other components in addition to those shown.

In general the method of the present invention, in one embodiment, includes, initially accessing a first blood vessel **701** either by surgical dissection or percutaneously with, for instance, a needle and guide wire. The first blood vessel through which suction cannula **71** may be inserted into patient **700** can be, in an embodiment, any blood vessel that can be accessed percutaneously or by surgical dissection such as femoral vein, femoral artery or jugular vein. Next, suction cannula **71** may be inserted into the first blood vessel **701** over the guide wire, and advanced toward a site of interest **702**, for instance, in a second vessel or a heart chamber **703** where an undesirable material **706** may be residing. The second blood vessel or heart chamber, in an embodiment, can be the main pulmonary artery, branch pulmonary arteries, inferior vena cavae, superior vena cavae, deep veins of the pelvic, legs, arms or neck, aorta, or any other medium to large blood vessel for which the use of a cannula is suitable for removing undesirable material without causing undesirable damage to the blood vessel. In addition, the advancement of suction cannula **71** may be gauged or documented by fluoroscopic angiography, echocardiography or other suitable imaging modality.

In the case of pulmonary embolism, the suction cannula **71** may normally be introduced through the femoral, jugular or subclavian vein. Alternatively, the suction cannula **71** may be introduced, if desired, directly into the cardiac chambers using a minimally invasive surgical or endoscopic, thoracoscopic, or pericardioscopic approach.

Thereafter, a third blood vessel **704** may be accessed either by surgical dissection or percutaneously with, for example, a needle and guide wire. Subsequently, reinfusion cannula **75** may be inserted into the third blood vessel **703** using an open or over the guide wire technique. The third blood vessel through which the reinfusion cannula **75** may be inserted, in one embodiment, can be any large vein, such as the femoral vein or jugular vein. Reinfusion cannula **75** may then be advanced toward a reinfusion site, for example, within a fourth blood vessel **705**. The fourth blood vessel, in one embodiment, can be the femoral vein, iliac vein, inferior vena cava, superior vena cava or right atrium.

Once reinfusion cannula **75** is in place and components of system **70** have connected, pump **73** may be activated, and suction cannula **71** may then be placed against and in substantial engagement with the undesirable material **706** at the site of interest **702** for removal by suctioning through the suction cannula **71**. The undesirable material **706** and circulatory fluid removed from the site of interest **702** may thereafter be directed along suction cannula **71** into filter device **72** where the undesirable material **706** can be entrapped and removed from the fluid flow. The resulting filtered fluid may next be directed downstream by way of pump **73** into the second filter device **74**, where any debris or material (e.g., ranging from smaller than microscopic in size to relatively larger) that may have escaped and moved downstream from filter device **74** can be further captured and removed from the fluid flow prior to reinfusion. The resulting cleansed fluid may then be directed into the reinfusion cannula **75** and introduced back into the patient **700**.

It should be appreciated that in certain instances, prior to connecting the suction cannula **71** and the reinfusion cannula **75**, system **70** may need to be primed with fluid to minimize or eliminate any air and/or air bubbles from the system prior to the initiation of suction and reinfusion. To that end, the suction cannula **71** and reinfusion cannula **75** can be primed separately with fluid or by allowing blood to backfill the cannulae after insertion. The remaining components of the system **70** including all tubing, the filter device **72**, the pump **73** and any other components of system **70** may also need to be primed with fluid prior to connecting them to the cannulae. In one embodiment, this can be achieved by temporarily connecting these components in fluid communication with other as a closed circuit and infusing fluid through a port, similar to port **51** in FIG. **5**, while providing another port through which air can be displaced.

Once these components have been fully primed with fluid, the circuit can be detached and connected to the primed suction cannula **71** and reinfusion cannula **75** in the appropriate configuration. Examples of a priming fluid include crystalloid, colloid, autologous or heterologous blood, among others.

During operation, pump **73**, in one embodiment, may remain activated so that suction and continuous reinfusion of blood can occur continuously for a desired duration or until the removal of the undesirable material has been confirmed, for instance, by visualizing the captured undesirable material in the filter device **72**. Alternatively pump **73** can be activated intermittently in short pulses, either automatically or manually by an operator (e.g., surgeon, nurse or any operating room attendant), for a desired duration or until the removal of the undesirable material has been confirmed by visualization of the material within filter device **72**.

It should be appreciated that since suction cannula **71** may be deployed within any vessel within patient **700**, depending on the procedure, in addition to being placed substantially directly against the undesirable material at the site of interest, suction cannula **71** may be deployed at a location distant from the site of interest where direct engagement with the undesirable material may not be possible or desired.

In a situation where the suction cannula **71** is positioned within a vessel exhibiting a venous flow and at a distant location from the undesirable material, it may be desirable to place the distal end of suction cannula **71** downstream of the undesirable material, so that the fluid flow can push the undesirable material from the site of interest into suction cannula **71** during suction. To the extent there may be some difficulties with suctioning the undesirable material from its location, if necessary, a catheter may be deployed through suction cannula **71** and to the site of interest, where the undesirable material may be dislodged location for subsequent removal.

On the other hand, when suction cannula **71** is positioned within a vessel exhibiting arterial flow and at a distant location from the undesirable material, it may be necessary to place the distal end of suction cannula **71** upstream of the undesirable material for the purposes of removal, even though the undesirable material must move against the fluid flow in order to enter into the suction cannula **71**. In such a situation, since the fluid flow in the vessel tends to exert a pressure

against the undesirable material at the site of interest, and thus may make the undesirable material difficult to remove, suction cannula **71** may include a flow occlusion mechanism, similar to balloon **33** shown in FIG. **3**. When expanded radially, the mechanism can substantially occlude the vessel, such that pressure being exerted on the downstream material by the fluid flow can be lessened. By lessening the pressure on the undesirable material to be removed, the suction force being applied at the site of interest can act to remove the material more easily. Again, if necessary, a catheter may be deployed through suction cannula **71** and to the site of interest, where the undesirable material may be dislodged or drawn back into the cannula to facilitate its removal.

The method of the present invention may also utilize a fluid reservoir, similar to reservoir **61** shown in FIG. **6**, in connection with system **70**. Such a reservoir may be placed in fluid communication between filter device **72** and pump **73**. The reservoir, in an embodiment, may be an independent reservoir or may be integrated with filter device **72** as a single unit, similar to that shown in FIG. **7**. By utilizing a reservoir, a volume of transiently collected fluid may be used to independently control the rate or volume of suctioning (i.e., draining, aspirating) and/or the rate or volume of reinfusion.

In an embodiment where the reservoir may be an open container, it should be appreciated that system **70** may not be a substantially closed system. As a result, rather than utilizing a pump that can generate both a suction and a driving force for a closed system, an independent vacuum device **76** may be employed to generate the necessary suction force, from the top of the reservoir where a volume of air exists, for removal of the undesirable material, while independent pump **73** may be employed to generate the necessary driving force, from the bottom of the reservoir where a volume of aspirated fluid exists, for reinfusion.

The method of the present invention may also utilize a suction cannula **71** with a deployable funnel tip, similar to funnel **20** in FIG. **2** or in FIG. **3**. In such an embodiment, the funnel may be deployed after suction cannula **71** has been positioned adjacent the site of interest. Thereafter, once the suction force has been activated, the funnel may be advanced to engage the undesirable material for removal. The funnel may remain deployed while the suction force is activated, and through multiple cycles, if necessary, until the undesirable material can be removed. Subsequently, the funnel may be retracted in order to reposition or remove suction cannula **71**.

The method of the present invention may further utilize reinfusion cannula **75** that has been incorporated into an introducer sheath, such as sheath **43** as a multi-lumen cannula (FIG. **4**C) or as one which concentrically aligns the suction cannula and reinfusion cannula (FIG. **4**D). In this embodiment, the sheath/reinfusion cannula **75** may initially be inserted into a first blood vessel. Suction cannula **71** may then be inserted into the introducer lumen of the sheath/reinfusion cannula **75**, and the assembly advanced together to a site of interest in a second blood vessel or heart chamber.

The method of the present invention may also further utilize a combined multi-lumen suction/reinfusion cannula, similar to cannula **46** shown in FIG. **4**E. In such an embodiment, the combined suction/reinfusion cannula may initially be inserted into a first blood vessel to a location where its distal suction lumen can be placed adjacent the site of interest within a second blood vessel, while its proximal located reinfusion lumen can be positioned at an appropriately spaced location from the suction lumen.

The method of the present invention may, in an embodiment, be employed to remove a plurality of undesirable materials, for instance, within the same vessel or its branches, from multiple vessels within the same vascular bed (e.g. left and right pulmonary arteries), from different vascular beds (e.g. pulmonary artery and iliofemoral veins), or a combination thereof. In such an embodiment, after the first undesirable material has been removed, the suction force may be deactivated. The next undesirable material to be removed may then be located, for example, using an appropriate imaging modality. Suction cannula **71** may thereafter be advanced to the location of this second undesirable material, and the suction force reactivated as above until this second undesirable material may be removed. The cycle may be repeated until each undesirable material at the various identified locations has been removed. Once all undesirable material has been removed, an appropriate procedure to prevent the development of or migration of new material, such as placement of an inferior vena cava filter, may be performed.

The method of the present invention may also be employed in combination with a balloon embolectomy catheter or other devices suitable for dislodging clots or other undesirable material from a cannula or a vessel. For example, should an undesirable material be lodged within suction cannula **71**, a balloon catheter can be inserted through, for instance, a side port, similar to port **51** in FIG. **5**, of suction cannula **71** and advanced past the lodged undesirable material. The balloon catheter may subsequently be inflated distal to the undesirable material. Once inflated, the suction force may be activated and the inflated catheter withdrawn along the suction cannula **71** to dislodge the undesirable material its location of obstruction. In a situation where the undesirable material may be adherent to a vessel wall, or for some other reason cannot be dislodged by simply applying suction to the site of interest, the balloon catheter can be inserted through the side port of suction cannula **71**, advanced past a distal end of cannula **71**, and past the adherent undesirable material. The balloon catheter may then be inflated distal to the undesirable material. Once inflated, the suction force may be activated and the inflated catheter withdrawn along the suction cannula **71**. As it is withdrawn, the balloon catheter can act to drag the undesirable material into suction cannula **71**.

The method of the present invention may further be employed in combination with a distal protection device (not shown), such as a netting device, designed to be positioned downstream of the undesirable material, when removal may be performed within a vessel having arterial flow. In particular, with suction cannula **71** positioned upstream of the undesirable material, the netting device may be inserted through a side port in suction cannula **71**, advanced past the undesirable material to a downstream location. The netting device may then be deployed to an open position approximating the diameter of the vessel. The deployed netting device may then act to entrap any material that may be dislodged from the site of interest and pushed downstream by the fluid flow. In the absence of the netting device, a dislodged material may be pushed downstream and may be lodged in a more life threatening location.

It is evident from the above description that the systems, including the various components, and methods of the present invention can act to remove clots and other types of undesirable material from the circulation, particularly from medium to larger vessels and heart chambers. Important to achieving this includes the ability of the operator to perform substantially en bloc removal of the undesirable material without significant fragmentation from the site of interest. Such a protocol may only be achieved previously with invasive, open surgery. In addition, by providing a system with components to permit aspirated fluid from the site of interest to be reinfused back to the patient, the system of the present invention

allows a sufficiently and relatively large suction cannula to be employed for the removal of a relatively large undesirable material **15** in substantially one piece, without fragmentation. Furthermore, by providing a definitive mechanical treatment to the problem, the systems and methods of the present invention provide an attractive alternative to treatments, such as thrombolysis, which may not be an option or may be ineffective for many patients, and which may carry a significant risk of major complications. As such, the systems and methods of the present invention now provide a significant contribution to the field of cardiovascular medicine and surgery, particularly thromboembolic disease.

Although references have been made in connection with surgical protocols, it should be appreciated that the systems and methods of the present invention may be adapted for use in connection with non-surgical protocols, and in connection with any vessel capable of permitting fluid flow therethrough and capable of being obstructed. For instance, the system of the present invention may be adapted for use in connection with clearing obstructed oil pipelines, water pipes, and air ducts, among others.

While the present invention has been described with reference to certain embodiments thereof, it should be understood by those skilled in the art that various changes may be made and equivalents may be substituted without departing from the true spirit and scope of the invention. In addition, many modifications may be made to adapt to a particular situation, indication, material and composition of matter, process step or steps, without departing from the spirit and scope of the present invention. All such modifications are intended to be within the scope of the claims appended hereto.

What is claimed is:

1. A system for removing an undesirable material from within a vessel, the system comprising:

a first cannula having a pathway extending therethrough, an expandable distal end, and an opposing proximal end, the first cannula designed for maneuvering within a vessel to a site of interest, such that when expanded a size difference between the distal end and the pathway provides a ratio sufficient to provide a vortex flow to be generated through the distal end, so that the undesirable material can be captured substantially en bloc through the distal end and removed along the first cannula away from the site;

a pump, in fluid communication with the proximal end of the first cannula, to provide a sufficient suction force for generating a vortex flow through the expanded distal end to permit removing the undesirable material en bloc from the site of interest; and

a second cannula in fluid communication with the pump while being in fluid communication with the proximal end of the first cannula, and being designed to have its distal end situated in spaced relation to the distal end of the first cannula, such that fluid removed from the site of interest by the first cannula can be directed along the second cannula and reinfused through the distal end of the second cannula.

2. A system as set forth in claim **1**, wherein the first cannula is designed to remove the undesirable material from one of a medium size blood vessel, a large size blood vessel, or a heart chamber.

3. A system as set forth in claim **1**, wherein the first cannula is designed to remove the undesirable material without substantial fragmentation.

4. A system as set forth in claim **1**, wherein the distal end of the first cannula includes a diameter that is relatively larger than that of the proximal end of the first cannula.

5. A system as set forth in claim **4**, wherein the distal end of the first cannula can occlude fluid flow adjacent the site of interest in order to enhance the suction force applied to the undesirable material.

6. A system as set forth in claim **1**, wherein the distal end of the first cannula is deployable to expand from a first diameter to a relatively larger second diameter.

7. A system as set forth in claim **6**, wherein the distal end of the first cannula is funnel shape.

8. A system as set forth in claim **6**, wherein the distal end of the first cannula includes a mechanism for substantially occluding fluid flow adjacent the site of interest, in order to enhance suction force being applied to the undesirable material.

9. A system as set forth in claim **1**, wherein the first cannula is made from a radioopaque material to permit visualization of the cannula for image guidance purposes.

10. A system as set forth in claim **1**, wherein the first cannula is made from a material sufficiently pliable to permit maneuvering of the cannula within the vessel.

11. A system as set forth in claim **1**, wherein the first cannula is made from a material sufficiently strong, so as to not collapse under suction.

12. A system as set forth in claim **1**, wherein the first cannula is reinforced to prevent kinking.

13. A system as set forth in claim **1**, wherein the first cannula is constructed of a material including one of polyvinyl chloride, polyethylene, polypropylene, polyurethane, polyether block amide, silicone, or a combination thereof.

14. A system as set forth in claim **1**, wherein the first cannula includes a side port to permit introduction of other instruments or devices into the first cannula.

15. A system as set forth in claim **1**, wherein the first cannula includes multiple lumens.

16. A system as set forth in claim **1**, wherein the pump can simultaneously generate a negative pressure to create a suction force necessary to pull the undesirable material into the first cannula and a positive pressure to create a driving force necessary to reinfuse fluid through the second cannula.

17. A system as set forth in claim **1**, wherein the pump can intermittently generate one of a negative pressure to create a suction force necessary to pull the undesirable material into the first cannula and a positive pressure to create a driving force necessary to reinfuse fluid through the second cannula.

18. A system as set forth in claim **1**, wherein the second cannula is made from a material sufficiently pliable to permit maneuvering of the cannula within a vessel.

19. A system as set forth in claim **1**, wherein the second cannula includes a side port to permit introduction of other instruments or devices into the second cannula.

20. A system as set forth in claim **1**, wherein the second cannula includes multiple lumens.

21. A system as set forth in claim **1**, wherein the second cannula and the first cannula are integral in an assembly and include respective distal ends that are in spaced relation relative to one another.

22. A system as set forth in claim **1**, wherein the second cannula is integrated as part of an introducer sheath through which the first cannula can be advanced such that the respective distal ends of the second cannula and the first cannula are in spaced relation relative to one another.

23. A system as set forth in claim **1**, further including a filter device in fluid communication with the first cannula for entrapping the undesirable material as it exits from the first cannula and removing it from the fluid flow.

24. A system as set forth in claim **23**, wherein the filter device includes a permeable sheet capable of permitting fluid

directed from the first cannula to flow therethrough, while impeding the undesirable material from flowing downstream within the system.

25. A system as set forth in claim **1**, further including a reservoir in fluid communication with the filter device for collecting fluid being directed from the filter device and providing a source of fluid for reinfusion by the second cannula.

26. A system as set forth in claim **1**, further including a reservoir and a filter device as an integral unit.

27. A system as set forth in claim **1**, further including a second filter positioned in fluid communication between the pump and the second cannula for removing undesirable debris from the fluid flow prior to reinfusion by the second cannula.

28. A system as set forth in claim **1**, wherein the undesirable material captured from the site of interest includes one of a clot, a thrombus, an embolus, a tumor, an infective vegetation, and a foreign body.

29. A system as set forth in claim **1**, wherein the fluid removed from the site of interest includes blood.

30. A method for removing an undesirable material from within a vessel, the method comprising:

maneuvering a first cannula having a pathway extending therethrough, an expandable distal end, and an opposing proximal end to a site of interest within a vessel in a patient, such that the distal end of the first cannula is positioned adjacent the undesirable material;

expanding the distal end of the first cannula to a diameter measurably larger than that of the pathway so that such a size difference allows a vortex flow to be generated through the distal end;

positioning a second cannula, in fluid communication with the first cannula, such that its distal end is situated in spaced relation to the distal end of the first cannula;

while the first cannula and second cannula are in fluid communication, providing a suction force to generate a vortex flow, through the expanded distal end of the first cannula, to the site of interest, to remove the undesirable material en bloc from the site of interest through the distal end of the first cannula; and

reinfusing, through the distal end of the second cannula, any fluid removed along with the undesirable material to a location in spaced relation from the distal end of the first cannula.

31. A method as set forth in claim **30**, wherein, in the step of maneuvering, the vessel includes one of a medium size blood vessel, a large size blood vessel, or a heart chamber.

32. A method as set forth in claim **30**, wherein, in the step of maneuvering, the distal end of the first cannula includes a diameter that is relatively larger than that of the proximal end of the first cannula.

33. A method as set forth in claim **30**, wherein the step of maneuvering includes substantially occluding fluid flow within the vessel adjacent the distal end of the first cannula, so as to enhance the suction force applied to the undesirable material.

34. A method as set forth in claim **33**, wherein the step of occluding occurs within a vessel exhibiting venous circulation.

35. A method as set forth in claim **33**, wherein the step of occluding occurs within a vessel exhibiting arterial circulation.

36. A method as set forth in claim **30**, wherein the step of maneuvering includes expanding, at the site of interest, the distal end of the first cannula from a first diameter to a relatively larger second diameter.

37. A method as set forth in claim **30**, wherein the step of positioning includes one of placing the distal end of the second cannula within the same vessel as that of the distal end of the first cannula, placing the distal end of the second cannula within a different vessel as that of the distal end of the first cannula, or placing the distal end of the second cannula in spaced relation to the distal end of the first cannula.

38. A method as set forth in claim **30**, wherein the step of providing includes generating the suction force and a driving force for reinfusion from one source.

39. A method as set forth in claim **30**, wherein the step of providing includes generating the suction force and a driving force for reinfusion from different sources.

40. A method as set forth in claim **30**, wherein the step of providing includes removing the undesirable material without substantial fragmentation.

41. A method as set forth in claim **30**, wherein the step of providing includes removing at least 10 cm^3 of the undesirable material without substantial fragmentation.

42. A method as set forth in claim **30**, wherein the step of providing includes entrapping, downstream of the proximal end of the first cannula and towards a source for the suction force, the undesirable material so as to remove it from the fluid flow.

43. A method as set forth in claim **42**, wherein in the step of entrapping includes permitting fluid flow to continue into the second cannula, while impeding movement of the undesirable material toward the second cannula.

44. A method as set forth in claim **42**, further including capturing undesirable debris downstream of the entrapped undesirable material but before to the second cannula, so as to remove the debris from the fluid flow prior to reinfusing.

45. A method as set forth in claim **30**, wherein the step of reinfusing includes collecting fluid directed from the proximal end of the first cannula and using the collected fluid as a source of fluid for reinfusion.

46. A method as set forth in claim **30**, wherein prior to providing a suction force, the method includes priming the circuit with fluid to minimize presence unwanted air being introduced into the patient.

47. A method as set forth in claim **30**, wherein the undesirable material being removed from the site of interest includes one of a clot, a thrombus, an embolus, a tumor, an infective vegetation, and a foreign body.

48. A method as set forth in claim **30**, wherein, in the step of reinfusing, the fluid removed from the site of interest includes blood.

49. A method as set forth in claim **30**, wherein the step of reinfusing includes introducing a sufficient amount of fluid back into the patient, so as to minimize fluid loss in the patient.

50. A method for removing an undesirable material from within a vessel, the method comprising:

identifying in a patient a site of interest within a vessel having an undesirable material to be removed therefrom;

maneuvering to the site of interest a pathway along which the undesirable material can be directed away from the site of interest;

expanding a distal end of the pathway to a diameter measurably larger than that of the pathway so that such a size difference allows a vortex flow to be generated through the distal end;

applying a suction force through the expanded distal end of the pathway to the site of interest, such that a vortex flow is generated into the pathway and that the undesirable material is pulled into the pathway by the vortex flow and away from the site of interest;

entrapping the undesirable material after it has exited the pathway, so as to remove the material from the fluid flow; and

while suctioning fluid into the pathway, continuously introducing the fluid flow back into the patient at a location in spaced relation to the site of interest, so as to minimize fluid loss in the patient.

51. An apparatus for removing an undesirable material from within a vessel, the apparatus comprising:

an elongated tube having a distal end through which an undesirable material can be captured, a pathway extending along the tube to provide a passage for transporting the undesirable material from the distal end, and a proximal end in opposing relations to the distal end through which the undesirable material can exit;

a funnel situated at the distal end of the tube, and designed for deployment between a collapsed closed position and an flared open position, so as to better engage and capture the undesirable material, the funnel when in the flared position has a diameter measurably larger than that of the pathway, such that a size difference between the funnel and the pathway provides a ratio sufficient to allow a vortex flow to be generated through the funnel to permit en bloc removal of the undesirable material through the funnel;

a balloon positioned circumferentially about the tube at a location proximal to the funnel; and

an attachment mechanism attached at one end to the funnel and at an opposite end to the balloon, so that upon expansion of the balloon, the mechanism can pull on the funnel to deploy it into a flared open position.

52. An apparatus as set forth in claim **51**, wherein the tube is made from a material sufficiently pliable to permit maneuvering of the cannula within the vessel.

53. An apparatus as set forth in claim **51**, wherein the tube is made from a material sufficiently strong, so as to not collapse under suction.

54. An apparatus as set forth in claim **51**, wherein the tube includes a side port to permit introduction of other instruments or devices into the first cannula.

55. An apparatus as set forth in claim **51**, wherein the tube includes multiple lumens.

56. An apparatus as set forth in claim **51**, wherein the funnel includes a plurality of strips, each pivotally coupled at one end to the distal end of the tube.

57. An apparatus as set forth in claim **56**, wherein the funnel includes a substantially impermeable membrane extending across a space between adjacent strips.

58. An apparatus as set forth in claim **51**, wherein the balloon is designed to also occlude the vessel within which the apparatus is situated upon expansion of the balloon.

59. An apparatus as set forth in claim **51**, wherein the attachment mechanism includes one of a string, a rod, a chain, or other similar mechanisms.

60. An apparatus for removing an undesirable material from within a vessel, the apparatus comprising:

an elongated tube having a distal end through which an undesirable material can be captured, a pathway extending along the tube to provide a passage for transporting the undesirable material from the distal end, and a proximal end in opposing relations to the distal end through which the undesirable material can exit;

a funnel situated at the distal end of the tube, and designed for deployment between a collapsed closed position and an flared open position, so as to better engage and capture the undesirable material;

a balloon positioned circumferentially about a distal portion of the tube at a location proximal to the funnel; and

a jacket provided circumferentially about the distal end of the tube, and extending from the funnel to the balloon, so that upon expansion of the balloon, the jacket can pull on the funnel to deploy it into a flared open position.

61. An apparatus as set forth in claim **60**, wherein the jacket acts as the mechanism for deploying the funnel into a flared open position upon expansion of the balloon.

62. An apparatus as set forth in claim **60**, wherein the jacket extends into the funnel and is attached to a base of the funnel, so as to act as a membrane defining the funnel.

63. An apparatus for removing an undesirable material from within a vessel, the apparatus comprising:

an elongated tube having a distal end through which an undesirable material can be captured, a pathway extending along the tube to provide a passage for transporting the undesirable material from the distal end, and a proximal end in opposing relations to the distal end through which the undesirable material can exit;

a funnel situated at the distal end of the tube, and designed for deployment between a collapsed closed position and an flared open position, so as to better engage and capture the undesirable material;

a balloon positioned circumferentially about the tube at a location proximal to the funnel; and

an attachment mechanism attached at one end to the funnel and at an opposite end to the balloon, so that upon expansion of the balloon, the mechanism can pull on the funnel to deploy it into a flared open position;

wherein the mechanism includes a sheath designed to slide toward and away from the distal end of the tube.

64. An apparatus as set forth in claim **63**, wherein the sheath, when actuated to slide away from the distal end tube, exposes the funnel to permit the funnel to be deployed into the flared open position.

65. An apparatus as set forth in claim **63**, wherein the sheath, when actuated to slide toward the distal end of the tube, covers up the funnel to permit the funnel to be deployed into a collapsed closed position.

66. A system for removing an undesirable material from within a vessel, the system comprising:

a first cannula having a pathway extending therethrough, an expandable distal end, and an opposing proximal end, the first cannula designed for maneuvering within a vessel to a site of interest, such that when expanded a size difference between the distal end and the pathway provides a ratio sufficient to allow a vortex flow to be generated through the distal end, so that the undesirable material can be captured substantially en bloc through the distal end and removed along the first cannula away from the site;

a second cannula in fluid communication with the first cannula and having its distal end situated in spaced relation to the distal end of the first cannula, such that fluid removed from the site of interest by the first cannula can be directed along the second cannula and reinfused through the distal end of the second cannula; and

a pump, in fluid communication with the proximal end of the first cannula, to provide a sufficient suction force for generating a vortex flow through the expanded distal end to permit removing the undesirable material from the site of interest, while in fluid communication with the second cannula, to provide a sufficient continuous reinfusion force so as to reintroduce the fluid flow removed from the site of interest.

67. A method for removing an undesirable material from within a vessel, the method comprising:

maneuvering a first cannula having a pathway extending therethrough, an expandable distal end, and an opposing proximal end to a site of interest within a vessel in a patient, such that the distal end of the first cannula is positioned adjacent the undesirable material;

expanding the distal end of the first cannula to a diameter measurably larger than that of the pathway so that such a size difference allows a vortex flow to be generated through the distal end;

positioning a second cannula, in fluid communication with the first cannula, such that its distal end is situated in spaced relation to the distal end of the first cannula;

providing a suction force to generate a vortex flow, through the expanded distal end of the first cannula, to the site of interest, so as to remove the undesirable material en bloc from the site of interest through the distal end of the first cannula; and

while providing the suction force to the first cannula, continuously imparting a reinfusion force, through the distal end of the second cannula, so that any fluid removed along with the undesirable material by the first cannula can be reintroduced by the second cannula to a location in spaced relation from the distal end of the first cannula.

* * * * *