Trials@uspto.gov
571-272-7822

Paper 15
Date: December 11, 2025

UNITED STATES PATENT AND TRADEMARK OFFICE

BEFORE THE PATENT TRIAL AND APPEAL BOARD

IMPERATIVE CARE, INC.,
Petitioner,

v.

INARI MEDICAL, INC.,
Patent Owner.

IPR2025-01025
Patent 11,974,910 B2

Before JEFFREY N. FREDMAN, ERIC C. JESCHKE, and TIMOTHY G. MAJORS, *Administrative Patent Judges.*

MAJORS, *Administrative Patent Judge*.

DECISION
Granting Institution of *Inter Partes* Review
35 U.S.C. § 314

Imperative Care v. Inari Medical
IPR2025-01021
Imperative Care Ex. 1060

I. INTRODUCTION

Imperative Care, Inc. ("Petitioner") filed a Petition (Paper 2, "Pet.") requesting *inter partes* review of claims 1–8, 11–15, and 18–20 of U.S. Patent No. 11,974,910 B2 (Ex. 1001, "the '910 patent"). Pet. 1, 21. Inari Medical, Inc. ("Patent Owner") filed a Preliminary Response (Paper 8, "Prelim. Resp."). With our permission, Petitioner filed a Reply to Patent Owner's Preliminary Response (Paper 13, "Prelim. Reply") and Patent Owner filed a Preliminary Sur-reply (Paper 14, "Prelim. Sur-reply").

Under 35 U.S.C. § 314(a), an *inter partes* review may not be instituted unless it is determined that there is a reasonable likelihood that the petitioner will prevail with respect to at least one of the claims challenged in the petition. For reasons explained below, we conclude that Petitioner shows a reasonable likelihood that it will prevail with respect to at least one of the '910 patent's challenged claims. We institute *inter partes* review on all challenged claims and on all asserted grounds. *See SAS Inst. Inc. v. Iancu*, 584 U.S. 357, 362–63 (2018); 37 C.F.R. § 42.108(a) ("When instituting *inter partes* review, the Board will authorize the review to proceed on all of the challenged claims and on all grounds of unpatentability asserted for each claim.").

Findings and conclusions at this stage are preliminary and based on the current record. Any final decision will be based on a full trial record.

II. BACKGROUND

A. Real Parties-in-Interest

Petitioner identifies itself as the real party-in-interest. Pet. 85. Patent Owner identifies itself as the real party-in-interest, and notes that it is a wholly-owned subsidiary of Stryker Corporation. Paper 3, 2.

B. Related Matters

The parties identify the following lawsuit involving assertion of the ’910 patent (and additional patents): *Inari Medical Inc. v. Imperative Care, Inc.*, No. 24-cv-3117 (N.D. Cal.).[1] Pet. 86; Paper 3, 2.

The parties further inform us that, in the above-noted lawsuit, the district court recently denied Patent Owner’s motion for a preliminary injunction. Prelim. Reply 1 (citing Ex. 1056 (Order denying motion for preliminary injunction)). In its order, the court found that Petitioner had raised “substantial questions as to the validity” of the ’910 patent’s claims based on some of the same prior art (i.e., Garrison combined with Laub) asserted in this IPR. Ex. 1056, 17–22 (finding Patent Owner “has not shown that these [validity] challenges lack substantial merit”). Petitioner argues the court’s order confirms the merits of Petitioner’s challenge to the claims in this IPR, while Patent Owner argues the order is irrelevant because it is based on different evidence under a different standard. Prelim. Reply 1–2; Prelim. Sur-Reply 1–2. Although we have considered the court’s denial of the motion for preliminary injunction, our decision to institute trial is based on the argument and record before us. And, in any event, we perceive no inconsistency between the court’s determination and our decision here that would warrant a further explanation at this time.

The parties also identify related matters before the Board. Pet. 86–87 (listing matters including, *inter alia*, IPR2024-01157 and IPR2024-01257);

---

[1] Patent Owner further states that *Inari Medical, Inc. v. Inquis Medical, Inc.*, No. 24-1023-CFC (D. Del.) involves several other patents that “are not related by priority to the involved ’910 Patent but may involve related issues.” Paper 3, 2.

Paper 3, 2–3.[2] *Id.* One day before the filing of the present Petition, Petitioner also filed a Petition in IPR2025-01021 ("the 1021 IPR") challenging claims of U.S. Patent No. 11,969,333 ("the '333 patent"), and we institute trial in the 1021 IPR concurrent with this Decision.[3]

Patent Owner further identifies numerous other patents and patent applications as related by priority to the '910 patent. Paper 3, 4.

C. The '910 Patent (Ex. 1001)

The '910 patent is titled "System for Treating Embolism and Associated Devices and Methods." Ex. 1001, code (54). The patent issued May 7, 2024, from an application filed June 27, 2023. *Id.* at codes (22), (45). The earliest application to which the '910 patent claims priority is a provisional application filed August 13, 2018. *Id.* at code (60).

According to the '910 patent, the "present technology relates generally to systems, methods, and devices for the intravascular treatment of emboli and/or thrombi within a blood vessel of a human patient." *Id.* at 1:23–26. Furthermore, "some embodiments of the present technology relate to systems for releasing stored vacuum pressure to aspirate clot material from a blood vessel." *Id.* at 1:26–28.

As background, the '910 patent explains that "[t]hromboembolic events are characterized by an occlusion of a blood vessel," which can lead to disorders "such as stroke, pulmonary embolism, heart attack, [and]

---

[2] We previously instituted trial in five related cases (IPR2024-01157; IPR2025-00156; IPR2025-00289; IPR2025-00728; IPR2025-00989). Those cases remain pending. We denied institution in IPR2025-01257.

[3] The '333 and '910 patents issued from sibling continuation applications, sharing the same parent (Application No. 18/167,757). Ex. 1001, code (63).

peripheral thrombosis." *Id.* at 1:32–35. Such "disorders are a major cause of morbidity and mortality." *Id.* at 1:35–37.

Thromboembolic events may develop in arterial or venous circulation. When an artery is occluded by a clot, tissue ischemia may lead to tissue infarction and even death unless "the flow of blood is reestablished rapidly." *Id.* at 1:38–44. "In the venous circulation, occlusive material can also cause serious harm," such as "deep vein thrombosis (DVT)," a condition where clots develop in the large veins of the legs or pelvis, obstructing blood drainage, leading to swelling, ulcers, pain, and infection. *Id.* at 1:45–53. Clots related to DVT can also "travel to other parts of the body including the heart, lungs, brain (stroke)." *Id.* at 1:53–56. In addition, "[i]n the pulmonary circulation, the undesirable [clot] material can cause harm by obstructing pulmonary arteries—a condition known as pulmonary embolism [(PE)]." *Id.* at 1:57–59. Such obstructions can, for example, restrict the lungs from exchanging gases with the blood "resulting in low blood oxygen and buildup of blood carbon dioxide." *Id.* at 1:59–67.

The '910 patent states that there "are many existing techniques to reestablish blood flow through an occluded vessel." *Id.* at 2:1–2. According to the patent, such techniques include, embolectomies (surgical excision of a clot), balloon angioplasty (percutaneous inflation of a balloon to dilate a stenosis in a vessel), and use of thrombolytic agents to dissolve clots. *Id.* at 2:2–32. However, the patent states, "there exists a need for improved systems and methods for embolic extraction." *Id.* at 2:45–46.

Figure 11 of the '910 patent is reproduced below, with annotations provided by Petitioner.

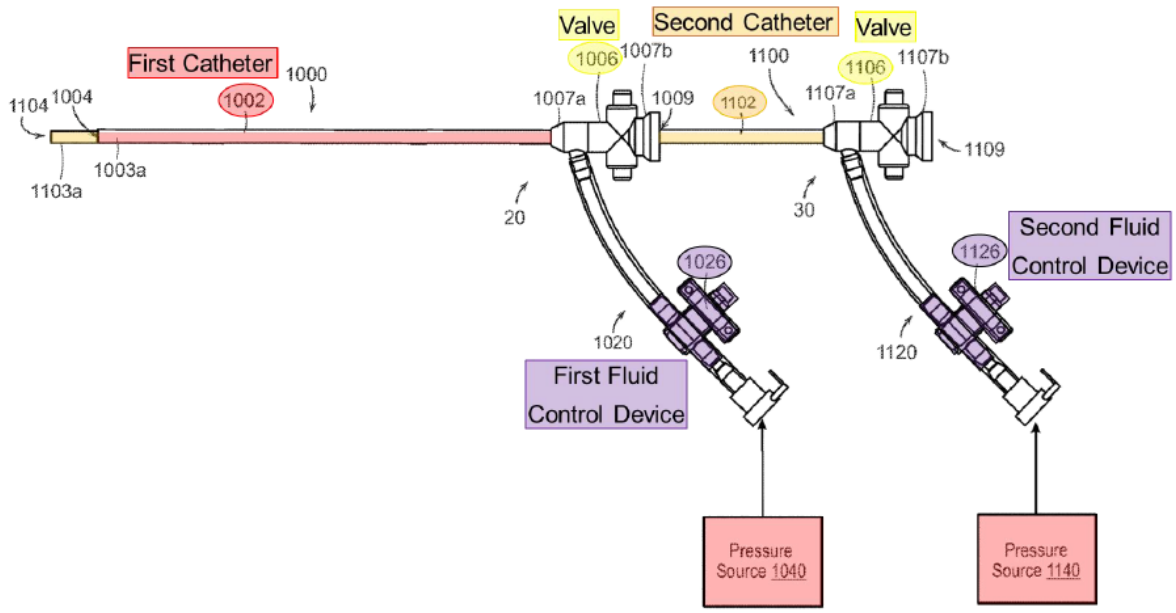

FIG. 11

Pet. 2 (reproducing Fig. 11 of the '910 patent with annotations); *see also* Prelim. Resp. 12 (similar annotation to Fig. 11). Figure 11 above is a schematic side view of an exemplary clot removal system described in the '910 patent. Ex. 1001, 3:27–30, 20:54–21:61 (describing embodiments of telescoping clot removal systems and methods of clot removal); Fig. 11. The depicted system includes a first catheter subsystem (1000) comprising a first catheter (1002), a first valve (1006), a first tubing subsystem (1020), a first fluid control device (1026), and a first pressure source (1040). *Id.* at 20:66–21:5. Likewise, Figure 11 includes a second catheter subsystem (1100) with a second catheter (1102), second valve (1106), second fluid control device (1126), and a second pressure source (1140). *Id.* at 21:5–12.

As shown, "the second catheter 1102 has a smaller cross-sectional dimension (e.g., diameter) than the first catheter 1002 so that the second catheter . . . can be inserted through the first valve 1006 and into the lumen 1004 of the first catheter." *Id.* at 21:28–32. "In some embodiments, the

second catheter 1102 can have a size of 16 French or smaller and the first catheter 1002 can have a size of 20 French or greater." *Id.* at 21:37–40.

The '910 patent explains that the system's fluid control devices can be, for example, a stopcock. *See, e.g.*, Ex. 1001, 21:2–12; *see also id.* at 6:6–47 (disclosing fluid control device may be, for example, a stopcock or a clamp that "is externally operable by a user to regulate the flow of fluid therethrough and, specifically, from the lumen . . . of the catheter . . . to the pressure source"). The patent states that the pressure source may comprise a "pump" or a "syringe." *Id.* at 7:33–41 ("In general, the pressure source can be any suitable source or combination of sources for generating and/or storing negative pressure."). And, the '910 patent states, the system's valves may be hemostasis valves like described in U.S. Application No. 16/117,519 (Ex. 1021 in this proceeding), which application the patent states is "incorporated herein by reference in its entirety." *Id.* at 5:56–61.

The '910 patent explains that a system, like that depicted in Figure 11, may be used to remove a clot from within a blood vessel (e.g., a pulmonary blood vessel). *See, e.g.*, *id.* at 21:62–23:47, Fig. 12 (flow diagram of process). That process may include, *inter alia*, the following steps: positioning the first catheter intravascularly within a patient; advancing the second catheter through the first catheter to a position near the clot material in the patient's blood vessel; coupling a pressure source to the second catheter via a fluid control device; activating the pressure source to generate a vacuum while the fluid control device is closed; opening the fluid control device to apply the vacuum to the second catheter and thereby aspirate clot material into the second catheter; retracting the second catheter and repeating as needed. *Id.* at Fig. 12; *see also id.* at Figs. 13A–C (stepwise illustration of a portion of a clot being aspirated into the second catheter).

D. Illustrative Claims

Petitioner challenges claims 1–8, 11–15, and 18–20. Claims 1 and 11 are the challenged independent claims. Claim 1 is illustrative and reads:

> 1. A clot treatment system for treating clot material comprising a pulmonary embolism in a vasculature of a patient, comprising:
>
> a first clot aspiration assembly, including:
>
> a first catheter;
>
> a first pressure source; and
>
> a first fluid control device between the first catheter and the first pressure source, wherein the first fluid control device is movable between (a) a first position in which the first pressure source is fluidly disconnected from the first catheter and (b) a second position in which the first pressure source is fluidly connected to the first catheter,
>
> wherein the first pressure source is configured to generate vacuum pressure while the first fluid control device is in a first position, and
>
> wherein upon movement of the first fluid control device from the first position to the second position, the vacuum pressure is applied to the first catheter to generate a suction at a distal portion of the first catheter; and
>
> a second clot aspiration assembly, including:
>
> a second catheter advanceable through the first catheter, wherein the second catheter has a distal portion, wherein the second catheter has a size of 16 French or greater, and wherein the second catheter is shaped to be intravascularly advanced through the vasculature of the patient such that the distal portion of the second catheter is positioned proximate to the pulmonary embolism;
>
> a second pressure source; and
>
> a second fluid control device between the second catheter and the second pressure source, wherein the second fluid control device is movable between (a) a first position in which the second pressure source if fluidly disconnected from the second catheter and

> (b) a second position in which the second pressure source is fluidly connected to the second catheter,
>
> wherein the second pressure source is configured to generate vacuum pressure while the second fluid control device is in the first position, and
>
> wherein, upon movement of the second fluid control device from the first position to the second position, the vacuum pressure is applied to the second catheter to generate suction at the distal portion of the second catheter to aspirate blood and at least a portion of the pulmonary embolism into the second catheter.

Ex. 1001, 35:52–36:34. Independent claim 11 is similar to claim 1, but omits the recitations of a "first fluid control device" and the two wherein clauses related to the "first clot aspiration assembly." *Id.* at 37:5–38.

To illustrate the subject matter of some of the challenged dependent claims, claim 3 depends from claim 1 and adds "the first catheter has a size of 24 French, and . . . the size of the second catheter has is [*sic*] 16 French." *Id.* at 36:38–40. Claim 5 depends from claim 1 and adds that "the first pressure source and the second pressure source comprise an electric pump." *Id.* at 36:43–45.

E. Prior Art and Asserted Grounds

Petitioner asserts that claims 1–8, 11–15, and 18–20 are unpatentable based on the following grounds:

Grounds	Claims Challenged	35 U.S.C. §[4]	Reference(s)/Basis
1	1–6, 8, 11–15, 18–20	103	Garrison,[5] Laub[6]
2	1–6, 8, 11–15, 18–20	103	Garrison, Aklog[7]
3	1–6, 8, 11–15, 18–20	103	Garrison, Laub, Aklog
4	6, 7, 20	103	Garrison, Laub, Hartley[8]
5	6, 7, 20	103	Garrison, Aklog, Hartley
6	6, 7, 20	103	Garrison, Laub, Aklog, Hartley
7	3, 12, 18	103	Garrison, Laub, Pasha[9]

[4] The Leahy-Smith America Invents Act ("AIA"), Pub. L. No. 112–29, 125 Stat. 284, 285–88 (2011), revised 35 U.S.C. §§ 102, 103 effective March 16, 2013. Based on the uncontested assertion that August 13, 2018, is the earliest possible priority date for the '910 patent, we apply the AIA versions of §§ 102 and 103 in this Decision. Pet. 18.

[5] Garrison, US 2015/0173782 A1, published June 25, 2015 (Ex. 1006 ("Garrison")).

[6] Laub, US 2017/0043066 A1, published Feb. 16, 2017 (Ex. 1012 ("Laub")).

[7] Aklog, US 8,734,374 B2, issued May 27, 2014 (Ex. 1005 ("Aklog")).

[8] Hartley, US 2003/0116731 A1, published June 26, 2003 (Ex. 1008 ("Hartley")).

[9] Ahmed K. Pasha *et al.*, *Successful management of acute massive pulmonary embolism using Angiovac suction catheter technique in a hemodynamically unstable patient*, Cardiovascular Revascularization Medicine 15, 240–243 (2014) (Ex. 1049 ("Pasha")).

8	3, 12, 18	103	Garrison, Aklog, Pasha
9	3, 12, 18	103	Garrison, Laub, Aklog, Pasha

Petitioner also relies on testimony from Troy L. Thornton (Ex. 1003) and Dr. Aquilla S. Turk, III (Ex. 1022) in support of its challenge. Patent Owner provides responsive testimony from Brian Brown. Ex. 2003.

III. ANALYSIS

A. Legal Standards

"In an [*inter partes* review], the petitioner has the burden from the onset to show with particularity why the patent it challenges is unpatentable." *Harmonic Inc. v. Avid Tech., Inc.*, 815 F.3d 1356, 1363 (Fed. Cir. 2016) (citing 35 U.S.C. § 312(a)(3)).

A claim is unpatentable under 35 U.S.C. § 103 if the differences between the claimed invention and the prior art are such that the claimed invention as a whole would have been obvious at the time the invention was made[10] to a person having ordinary skill in the relevant art. *KSR Int'l Co. v. Teleflex Inc.*, 550 U.S. 398, 406 (2007). The question of obviousness is resolved on the basis of underlying factual determinations including: (1) the scope and content of the prior art; (2) any differences between the claimed subject matter and the prior art; (3) the level of ordinary skill in the art; and

[10] The AIA revised § 103 such that obviousness is assessed "before the effective filing date of the claimed invention," but *KSR* and other obviousness precedents cited herein remain applicable despite this change in the timing of the obviousness inquiry.

(4) secondary considerations (i.e., objective indicia) of nonobviousness when presented.[11] *Graham v. John Deere Co.*, 383 U.S. 1, 17–18 (1966).

To show unpatentability based on a combination of teachings, "[a]n obviousness determination [also] requires finding both that a skilled artisan would have been motivated to combine the teachings of the prior art references to achieve the claimed invention, and that the skilled artisan would have had a reasonable expectation of success in doing so." *CRFD Rsch., Inc. v. Matal*, 876 F.3d 1330, 1340 (Fed. Cir. 2017) (internal quotation marks omitted).

B. Level of Ordinary Skill in the Art

Petitioner proposes that the person of ordinary skill in the art ("POSA") "would have had an undergraduate degree in mechanical engineering or a related engineering discipline and 2-4 years of catheter design experience and, where necessary, would have consulted with a physician regarding the methods of treatment." Pet. 18 (citing Ex. 1003 ¶¶ 35–36).

Patent Owner states that Petitioner's proposed definition is "insufficient" but does not, in its Preliminary Response, explain why it is "insufficient" or propose a definition of its own. Prelim. Resp. 18 (citing Ex. 2003 ¶ 47).[12] Instead, in advancing Patent Owner's counterarguments,

---

[11] Petitioner states that it is not aware of any objective indicia of nonobviousness (Pet. 85), and Patent Owner does not provide argument about any objective indicia.

[12] Mr. Brown opines that a POSA, whether an engineer or a clinician, would have had experience with "thrombectomy" devices and/or procedures. Ex. 2003 ¶ 47. But, like Patent Owner, Mr. Brown applies Petitioner's definition and does not explain why his articulation of the POSA's

"Patent Owner applies Petitioner's definition." *Id.* For this Decision, we apply Petitioner's POSA definition, which appears to be reasonable and consistent with the prior art.

C. Claim Construction

In an IPR, we construe claims using the same claim construction standard used in a civil action before the courts under 35 U.S.C. § 282(b), including construing claim language in accordance with its ordinary and customary meaning as understood by the POSA, in view of the patent's specification and considering the patent's prosecution history. 37 C.F.R. § 42.100(b). We need only construe terms where the parties dispute a term's meaning and only to the extent needed to resolve the controversy. *Realtime Data, LLC v. Iancu*, 912 F.3d 1368, 1375 (Fed. Cir. 2019).

Petitioner contends that the term "filament" in dependent claim 7 means at least "one or more threads, lines, cords, ropes, ribbons, flat wires, sheets, or tapes." Pet. 19–20. Patent Owner notes its disagreement with Petitioner's interpretation of the term "filament" in related proceedings (e.g., IPR2025-00289) but contends that the Board need not construe that term (or any other term of the '910 patent) to resolve the issues presently in dispute in this case. Prelim. Resp. 18–19 n.3.

There is no apparent need to further construe any terms of the '910 patent's challenged claims at this stage. For example, there is no dispute that Hartley teaches a "filament" as claimed. Pet. 78–80 (citing Hartley's hemostasis valve and "string" feature that, when pulled, constricts a lumen and creates a seal, as meeting claim 7's "filament" limitation).

---

qualifications should change the result. Patent Owner may, if it chooses, develop argument in its papers about the POSA level at trial.

D. Asserted References

Petitioner asserts, and Patent Owner does not dispute, that each of Garrison, Laub, Aklog, Hartley, and Pasha are prior art under 35 U.S.C. § 102(a)(1). Pet. 21–22. Because the disputed issues at this stage relate primarily to the combination of Garrison with Laub and/or Aklog, the summary below focuses on those references.

1. Garrison (Ex. 1006)

Garrison is a published U.S. patent application, which published June 25, 2015. Ex. 1006, code (43). Garrison relates generally to medical devices and methods for treating ischemic stroke. *Id.* ¶¶ 2–3 (explaining that "[a]cute ischemic stroke is the sudden blockage of adequate blood flow to a section of the brain, usually caused by a thrombus or other emboli lodging or forming in one of the blood vessels supplying the brain"), ¶ 4 (explaining, as background, that endovascular treatment of stroke often involves delivery of thrombolytic agents and/or interventional thrombectomy to remove blockages).

Garrison explains that interventions in the cerebral or intracranial vasculature often have special access challenges. *Id.* ¶ 42. For example, according to Garrison, most interventional procedures use a transfemoral access to the carotid or vertebral artery and the "access route is long, often tortuous." *Id.* Moreover, "cerebral vessels are usually more delicate and prone to perforation than coronary or other peripheral vasculature." *Id.* Such challenges, Garrison explains, can make it more difficult to quickly access and restore blood perfusion to the cerebral vasculature. *Id.* ¶¶ 43–44. Garrison describes "methods and devices that optimize clot aspiration through either transfemoral or transcarotid access approaches." *Id.* ¶ 48.

An exemplary clot treatment system is shown below in Garrison's Figure 33 (including Petitioner's annotations).

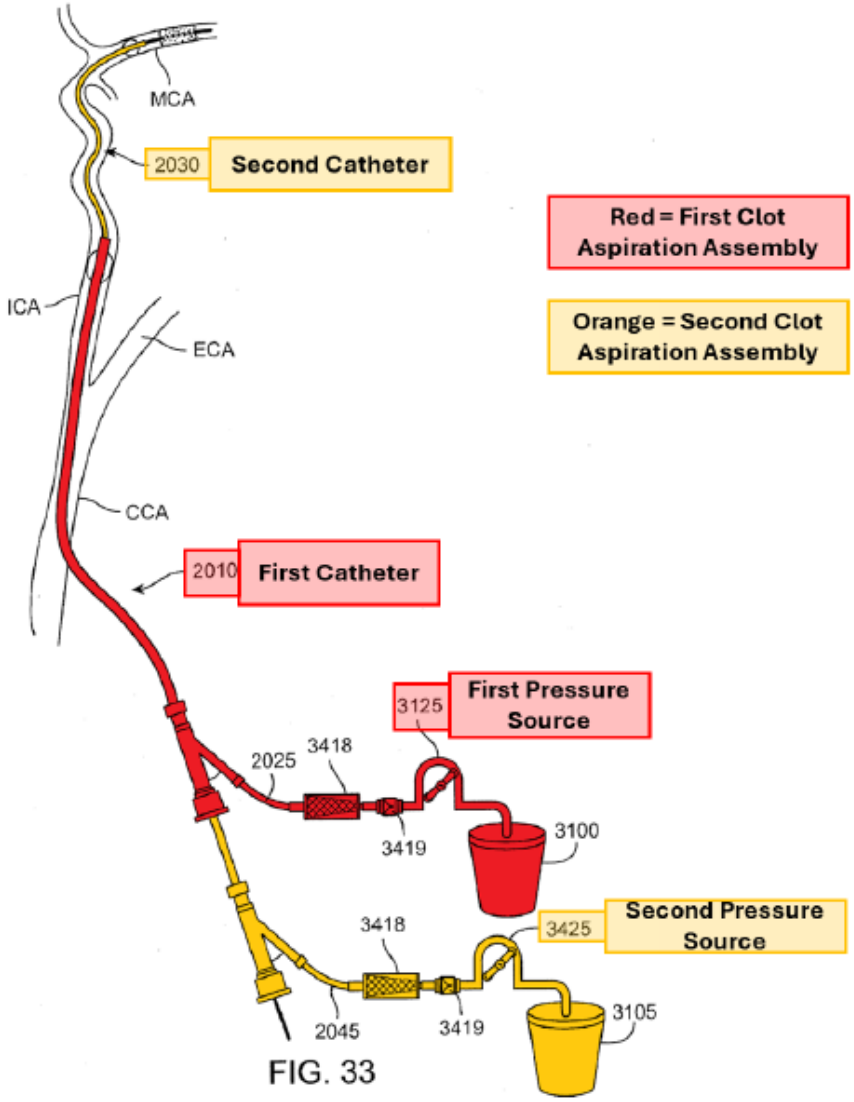

Pet. 3 (citing Ex. 1006, Fig. 33 (annotated by Petitioner)). Figure 33 of Garrison, above, is a schematic side view of an illustrative embodiment for treating an artery with active aspiration. Ex. 1006 ¶ 29; *see also id.* ¶¶ 130–142 (describing exemplary embodiments of aspiration and flow control). In the system shown above, and focusing on the features colored red, arterial access device 2010 (labeled "First Catheter") is fluidly connected via flow line 2025 to filter 3418 and an aspiration source 3125 (labeled "First

Pressure Source"). *Id.* ¶ 131. Likewise, focusing on the features colored yellow, catheter 2030 (labeled "Second Catheter") is inserted through the "First Catheter" and is fluidly connected via flow line 2045 to an additional filter 3418 and aspiration source 3425 (labeled "Second Pressure Source").

In a variation of Figure 33's embodiment, Garrison depicts an embodiment where the "First Catheter" and the "Second Catheter" are connected to a single aspiration source. In that embodiment, shown in Figure 34 below (annotated by Petitioner), a valve is added that can control the connections between the catheters and the aspiration source.

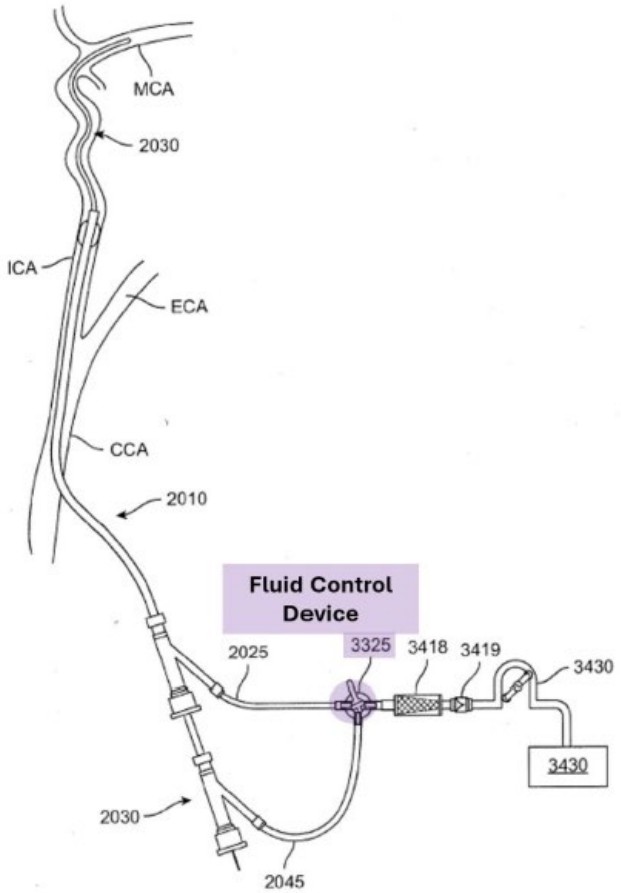

FIG. 34

Pet. 4 (citing Ex. 1006 ¶ 132, Fig. 34). Figure 34 is a schematic side view of an embodiment of a clot treatment system depicted in Garrison, and shows a valve 3325 (labeled "Fluid Control Device") disposed in fluid connection

with flow lines 2025 and 2045 and between the catheter and an aspiration source 3430. According to Garrison, the "valve may enable one device, the other device, both devices, or neither device to be connected to the aspiration source at any given time." Ex. 1006 ¶ 132 (disclosing the valve "may be a 3-way or 4-way stopcock" or "may be a flow controller with a simple actuation" that selects the desired configuration); *see also id.* ¶ 133 (describing flow controller variants).

Continuing, Garrison teaches that "[t]he active source of aspiration may be an aspiration pump, a regular or locking syringe, a hand-held aspirator, hospital suction, or the like." *Id.* ¶ 134. For example, Garrison discloses that:

> In one embodiment, a locking syringe (for example a VacLock Syringe) is attached to the flow controller and the plunger is pulled back into a locked position by the user while the connection to the flow line is closed prior to the thrombectomy step of the procedure. During the procedure when the tip of the aspiration device (either the arterial access device or the catheter) is near or at the face of the occlusion, the user may open the connection to the aspiration syringe. This would enable the maximum level of aspiration in a rapid fashion with one user, something that is currently not possible with existing technologies.

Id.

Garrison discloses that a "disadvantage" of current sources of aspiration is that blood received into an external reservoir or syringe is "generally discarded at the end of the procedure, and as such represents blood loss from the patient." *Id.* ¶ 135. According to Garrison, when blood has been exposed to air or static for a period of time, there is a risk of thrombus formation or damage to the blood cells. *Id.* ("Usually, aspirated blood is not returned to the patient to avoid risk of thromboembolism").

Nonetheless, Garrison then describes an exemplary aspiration pump that is "configured not to harm blood cells and which may be configured to return blood to the central venous system in real time during the procedure, so there is no reservoir in which the blood remains static." *Id.* ¶ 136, Fig. 36.

2. Laub (Ex. 1012)

Laub is a published U.S. patent application, which published February 16, 2017. Ex. 1012, code (43). Laub relates to systems for removing material, including thrombi, from a patient's body. *Id.* ¶ 2 (describing "unwanted material such as emboli, thrombi, tumors, or debris"). In embodiments, Laub's systems comprise a "steerable catheter." *Id.*; *see also id.* ¶ 4 (explaining that clots in the arteries can lead, for example, to possible migration to the brain and stroke, and clots in the veins can migrate to the lungs resulting in a potentially fatal pulmonary embolism).

Laub states that its systems are suitable for "thrombectomy and/or embolectomy procedures" in the patient's vasculature. *Id.* ¶ 5. Such systems may be used for, for example, "remov[ing] clots from patients suffering from or at risk of pulmonary embolism." *Id.* Further, Laub discloses, "[i]n some embodiments, the system is further configured to return aspirated blood to the patient which, for example, allows for greater suction pressures and/or flow rates according to certain embodiments." *Id.*

An annotated version of Laub's Figure 1A is reproduced below.

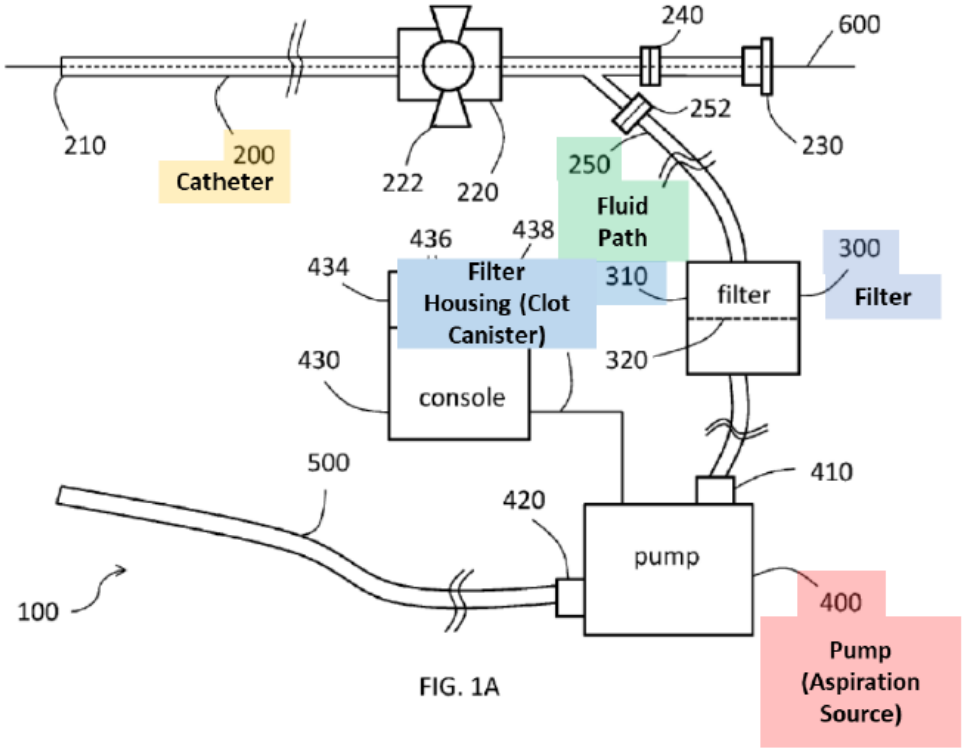

Pet. 6 (citing Ex. 1012, Fig. 1A (with Petitioner's annotations)). Figure 1A above is a side view of a system described in Laub for removing clots from a patient's body. Ex. 1012 ¶ 11. The system 100 includes, among other features, an aspiration catheter 200 (labeled "Catheter" and colored yellow) in fluid connection with fluid path 250 (colored green) and filter 300 (labeled "Filter Housing (Clot Canister)" and colored blue). *Id.* ¶ 24. Downstream from the fluid path and filter is a pump 400 (labeled "Pump (Aspiration Source)" and colored red), which pump is shown with an inlet port 410 and an outlet port 420. *Id.* A return catheter 500 is included in the system shown above and is fluidly connected to the pump's outlet port, which return catheter may be used to send blood expelled from the outlet port back to the patient for reinfusion. *Id.*

Laub teaches that the aspiration catheter, in embodiments, may have a French size of between 5 French and 20 French. *Id.* ¶ 28 (disclosing "[i]n some embodiments, aspiration catheter 200 has a French size of at least 16 Fr" and "[i]n certain preferred embodiments, aspiration catheter has a French size of equal to or greater than 10 Fr to allow for aspiration of large thrombi and/or other solid materials from the patient").

Laub teaches that the pump "is configured to create a suction force to drive system 100 during use" and that such pump may include "a centrifugal pump" or other pumps known in the art. *Id.* ¶ 41 (noting the pump may be "a rotary pump, peristaltic pump, roller pump, or other form of pump known in the art"); *see also id.* ¶¶ 42–44 (disclosing exemplary negative pressures (e.g., 0–400 mmHg) and flow rates (e.g., 100–6000 mL/min) that may be produced by the pump). Laub discloses that the pump may, in embodiments, be configured to "generate a positive pressure at discharge port 420 such that the aspirated blood received through inlet port 410 is expelled through discharge port 420 during use." *Id.* ¶ 45. Moreover, according to Laub:

> In certain embodiments, reinfusing the patient's blood continuously during aspiration allows for greater suction pressure and/or flow rates (e.g., 2-4 L/min) which can assist in dislodging and removing larger clots and/or tumors than would otherwise be possible. Without returning the blood back to the patient, such high flow rates could quickly result in exsanguination of the patient.

Id. (noting that blood may be further filtered of debris or undesired material before being returned to the patient).

3. Aklog (Ex. 1005)

Aklog is a U.S. patent that issued May 27, 2014. Ex. 1005, code (45). Aklog relates generally to "systems and methods for removing undesirable material from a site of interest within the circulatory system" and, more

specifically, to removing "clots, thrombi, and emboli" from the medium to large vessels of the body, while reinfusing fluid removed from the site of interest back into the patient to minimize fluid loss. *Id.* at 1:17–24.

According to Aklog, "[v]essels from which the undesirable material may be removed, in accordance with an embodiment of the present invention, include, for example, those within the pulmonary circulation (e.g., pulmonary arteries)." *Id.* at 7:32–35. Aklog discloses that undesirable material may also be removed from, for example, the venous circulation in the legs or pelvis. *Id.* at 7:35–37; *see also id.* at 2:7–10 (explaining that DVT arises from clots that develop in the large veins of the legs or pelvis). Moreover, Aklog discloses that, "[a]lthough reference is made to medium and large vessels, it should be appreciated that the systems and methods . . . can be scaled and adapted for use within the smaller vessels within the body, if desired." *Id.* at 7:43–46.

Aklog's Figure 7 is reproduced below, with Petitioner's annotations.

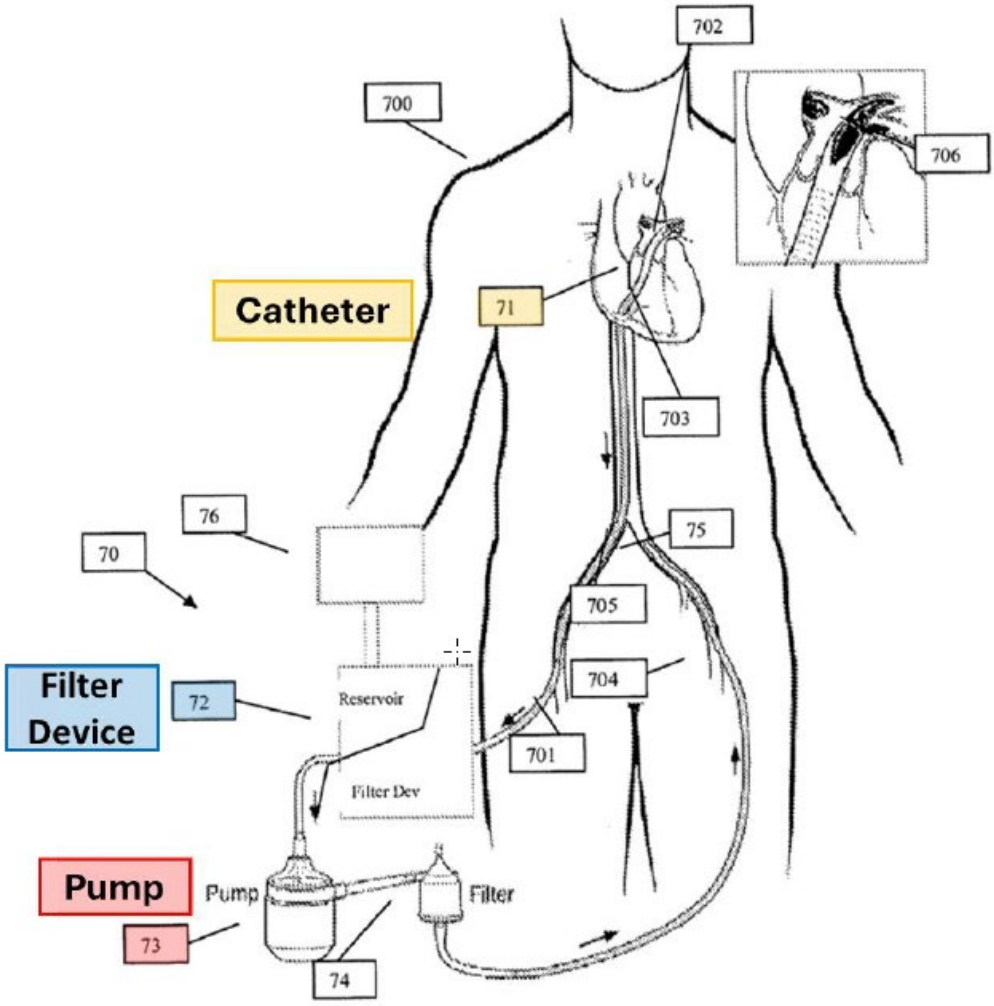

Fig. 7

Pet. 7 (citing Ex. 1005, Fig. 7). Figure 7, reproduced above, is an illustrated view of an embodiment of Aklog's system 70 deployed within a patient 700 for removing undesirable (e.g., clot) material 706 from a site of interest 702. Ex. 1005, 15:18–16:17 ("In the case of pulmonary embolism, the suction cannula 71 may normally be introduced through the femoral, jugular or subclavian vein"). The system includes suction cannula 71 (labeled "Catheter" and colored yellow), which is fluidly connected to a filter device 72 (colored blue) and a pump 73 (colored red). *Id.* The depicted system

also includes a second filter device 74 downstream from the pump and a reinfusion cannula 75 for returning aspirated and cleansed blood to the patient. *Id.* at 15:66–16:17.

Aklog discloses that the cannula "may be of any sufficient size, so long as it can be accommodated within a predetermined vessel, such as a medium to large size blood vessel." *Id.* at 11:12–23 (noting the size of the cannula may also be determined based on the size of the material to be removed, and, "[o]f course, cannula . . . can be scaled and adapted for use within smaller vessels in the body and for removing a relatively smaller volume or amount [of] undesirable material, if so desired").

Aklog teaches that the pump may be designed to "generate negative pressure, so as to create a necessary suction force through cannula 10 to pull any undesirable material from the site of interest," and "may also be designed to generate the positive pressure, so as to create a necessary driving force to direct fluid" through an exit port of the pump "for reinfusion of fluid removed." *Id.* at 11:65–12:5. Further, Aklog explains, the pump "may be any commercially available pump, including those for medical applications and those capable of pumping fluids, such as blood. Examples . . . include[] a kinetic pump, such as a centrifugal pump, and an active displacement pump, such as a rollerhead pump." *Id.* at 12:9–14.

E. Alleged Obviousness over Garrison in Combination with Laub and/or Aklog (Grounds 1–3)

Our analysis below focuses on Petitioner's contentions and Patent Owner's counterargument for the asserted obviousness of claim 1 over the combination of Garrison with Laub and/or Aklog. As a brief overview, Petitioner contends that Garrison teaches or suggests an aspiration system with nearly all the features of claim 1, except that Garrison does not describe

using its system to treat a pulmonary embolism or using a second catheter in the second clot aspiration assembly with a size as large as that claimed ("16 French or greater"). Pet. 22–57. Petitioner contends, however, that both Laub and Aklog teach treating pulmonary embolisms with similar clot aspiration systems, using larger-sized aspiration catheters (e.g., 16 French), and that it would have been obvious for the POSA to have modified Garrison's systems to increase the sizes of the respective catheters and to treat and remove pulmonary embolisms (or other clots residing in larger blood vessels). *Id.* Patent Owner counters that Petitioner's challenge is flawed because Garrison allegedly does not disclose the "fluid control device[s]" configured to "generate vacuum pressure" as recited in claim 1. Prelim. Resp. 33–37. Moreover, Patent Owner argues that a POSA would not have modified Garrison's systems as proposed because, for example, increasing the diameter of the catheters without returning aspirated blood to the patient (which Patent Owner contends Laub and Aklog say is necessary) would be dangerous. *Id.* Those contentions and counterargument, addressed in more detail below, represent the issues in material dispute at this stage.

1. Petitioner's Contentions on Claim 1

Petitioner contends that Garrison in view of Laub and/or Aklog would have rendered obvious claim 1's preamble reciting "a clot treatment system for treating clot material comprising a pulmonary embolism in a vasculature of a patient," if that preamble is limiting. Pet. 23–34. According to Petitioner, Garrison describes systems (such as shown in Figures 33 and 34) that aspirate (i.e., suction) clots in a patient's vasculature. *Id.* Petitioner contends that Laub and Aklog describe similar systems, having, *inter alia*, aspiration catheters, in-line fluid pathways, filters, and aspiration pumps. *Id.* at 23–25 (comparing illustrative systems of Garrison, Laub, and Aklog);

Ex. 1003 ¶¶ 67–86 (same). And, Petitioner contends, the process for suctioning blood clots from a patient's vasculature is generally similar even when clots are located in different parts of the body. Ex. 1022 ¶¶ 21–22 (testifying the "general procedure for aspirating a blood clot from a blood vessel is similar regardless of whether the physician is removing the clot from the brain, lungs, legs, or any other part of the body").

Petitioner argues that, although Garrison focuses on removing clots in the cerebral vasculature, a POSA would have found it obvious to use and optimize Garrison's system to treat pulmonary embolism (PE) based on Laub and Aklog, which describe treating PE and suggest that larger catheters may, if needed, be used for that purpose. *See, e.g.*, Pet. 24–25 (citing Ex. 1012, Fig. 1A, ¶ 5; Ex. 1005, Fig. 1, 7:32–37, 15:27–53). Petitioner, with the supporting testimony of Mr. Thornton and Dr. Turk, argues that it would have been routine for a POSA to use aspiration systems designed for one part of the vasculature in a different part of the vasculature, and to optimize the size of the catheters as appropriate. *Id.* at 27–28 (citing, e.g., Ex. 1003 ¶¶ 74–78, 84–86; Ex. 1022 ¶¶ 26–37). According to Petitioner, this is evidenced in the prior art and even acknowledged in the '910 patent. *Id.* at 27–28 (citing Ex. 1020,[13] 1 as describing catheter systems that treat cerebral clots and PE; citing the patent's disclosure that the system can be used to treat PE and DVT, or adapted to treat cerebral embolisms (Ex. 1001, 4:51–58)), 31–32 (citing, e.g., Ex. 1005, 7:43–46 (teaching Aklog's system for treating larger vessels can be "scaled and adapted" for use in smaller vessels, if desired)).

[13] Brady, WO 2018/019829 A1, published February 1, 2018 (Ex. 1020).

Furthermore, Petitioner contends that, although Garrison describes catheters with smaller diameters and enhanced flexibility, those catheter systems would be suitable for use in larger blood vessels for treating PE. Pet. 30–31 (citing Garrison as teaching catheters ranging from 6–10 Fr, and comparing to aspiration systems that treat PEs or DVTs with catheter sizes from 5–12 Fr). Insofar as Garrison teaches that cerebral clots can be more difficult to remove due to "special access challenges" in harder-to-reach or more delicate vessels of the brain, Petitioner and Dr. Turk explain that those challenges are not prevalent when treating clots in the larger vessels of the body, which Petitioner argues supports that a POSA would have reasonably expected success in adapting Garrison's system to treat PEs. *Id.* (citing Ex. 1022 ¶¶ 33–37 (testifying, *inter alia*, that "while a catheter designed to treat PE and DVT may not be configured to reach a clot in the cerebral vasculature due to size or stiffness, a catheter designed to treat cerebral occlusions could reach a clot in the peripheral vasculature or lungs")).

Turning to claim 1's recited first and second "clot aspiration" assembl[ies]," Petitioner contends that Garrison teaches or suggests a system with those features. Pet. 34–57. For example, Petitioner cites Garrison's Figure 33 as including first and second catheters and first and second pressure sources in fluid communication with the respective first and second catheters. *See, e.g.*, Pet. 34–35 (annotating Fig. 33 and citing Garrison's teaching (Ex. 1006 ¶ 134) that the source of aspiration "may be an aspiration pump, a regular or locking syringe, a hand-held aspirator, hospital suction, or the like," which Petitioner contends "are all 'pressure sources'" (citing Ex. 1003 ¶ 89)). For the recited first and second "fluid control device[s]," Petitioner cites Garrison's teaching that a valve, such as valve 3325 (e.g., stopcock) or a flow controller (e.g., as described in Ex. 1006 ¶ 133) can be

disposed between the catheters and the pressure source(s). Pet. 37 ("Both the stopcock and flow controller are fluid control devices because they regulate whether fluid can flow through flow lines 2025 and 2045 to the pressure source."); Ex. 1003 ¶ 91 (explaining how a user controls fluid flow by turning the handle of the stopcock to open or close the valve).

Although Garrison's Figure 33 does not depict an alleged "fluid control device," and Figure 34 depicts only a single valve/stopcock that connects both flow lines 2025 and 2045, controlling access to a single pressure source, Petitioner contends it would have been obvious to use a valve (i.e., fluid control device) on each line when two separate pressure sources are included. Pet. 50–54. Petitioner's modification of the systems depicted in Garrison's Figures 33 and 34 is shown below.

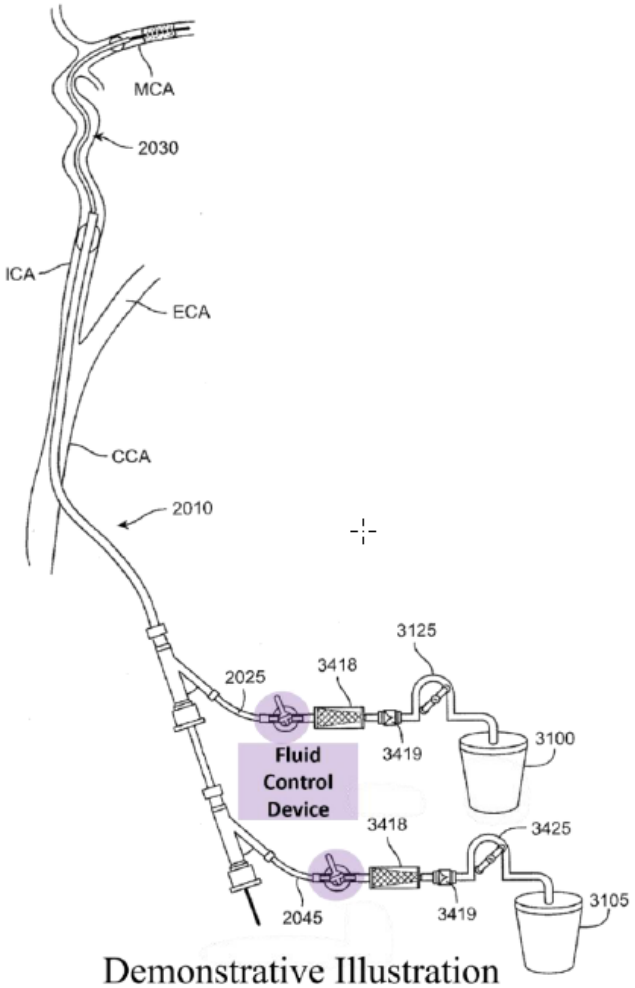

Demonstrative Illustration
Modified FIG. 33

Pet. 51 (modified version of Fig. 33). The "Demonstrative Illustration" above modifies Garrison's Figure 33 to include two valves (e.g., like the valve shown in Garrison's Figure 34) on each of flow lines 2025 and 2025. As shown, each valve is colored purple and labeled "Fluid Control Device."

According to Petitioner, a POSA would have been motivated to add a fluid control valve (e.g., stopcock 3325) on each line to allow for "the maximum level of aspiration in a rapid fashion" (as allegedly disclosed in Garrison and discussed in more detail below). Pet. 51–52 (citing Ex. 1003 ¶ 114); *see also id.* at 35–39 (Ex. 1003 ¶¶ 90–95). Petitioner also argues a POSA would have been motivated to position two valves in line as shown

because it "allows the physician to effectively control suction through the catheters" and places the valves "close to the portion of the catheter being held by the physician so it would make operation simple." Pet. 52 (Ex. 1003 ¶¶ 114–115). Moreover, Petitioner contends, this modification "would have given physicians more flexibility when using the device" and, "[b]y incorporating two fluid control devices (e.g., stopcocks) . . . , the user could control these independent pressure sources separately." *Id.* (noting that the pressure sources could be of different types, such as a syringe and pump, or provide different amounts or types of suction); *see also id.* at 53 (arguing connecting two valves to the tubing would have been a "simple modification" using conventional parts (e.g., Luer-type connectors)).

Claim 1 further requires that each of the "first pressure source" and the "second pressure source" "is configured to generate vacuum pressure while the [respective first or second] fluid control device is in the first [(i.e., closed)] position," and "upon movement of the [respective first or second] fluid control device from the first position to the second [(i.e., open)] position," the vacuum pressure is applied and generates suction at the distal portion of the respective first or second catheter. *See supra* Section II.D.

Petitioner contends that Garrison renders obvious these limitations. Pet. 37–39 (addressing generation and application of vacuum pressure in first clot aspiration assembly), 54–57 (addressing generation and application of vacuum pressure in the second clot aspiration assembly). Petitioner cites Garrison's teaching that, for example, a locking syringe can be used as the pressure source to generate a vacuum in the flow line "while the connection to the flow line is closed prior to the thrombectomy step" and that, once the end of the catheter is placed near the clot, "the user may open the connection to the aspiration syringe" to "enable the maximum level of aspiration in a

rapid fashion." *See, e.g.*, *id.* at 37–38 (citing and quoting Ex. 1006 ¶ 134). According to Petitioner, although Garrison expressly describes "using a flow controller and syringe" in this embodiment, a POSA would have understood that the generation and application of a vacuum pressure would work similarly if a stopcock and pump were used as the respective fluid control devices and pressure sources. *See, e.g.*, Pet. 38–39 (citing a similar example in Garrison (Ex. 1006 ¶ 129) where a stopcock is used in lieu of a flow controller), 55 (citing Ex. 1003 ¶¶ 94–95, 120–123 (testifying "[i]f the fluid control device disclosed in Figure 34 were incorporated into both flow lines in the embodiment in Figure 33, moving either of the fluid control devices [(e.g., stopcocks)] to the second [(open)] would have this same impact")); Prelim. Reply 3–5 (arguing Patent Owner incorrectly seeks to limit Garrison's rapid aspiration technique to only the use of a syringe as the pressure source).

Lastly, as to claim 1's recitation that the "second catheter . . . has a size of 16 French or greater," Petitioner argues that increasing the size of the catheters of Garrison would have been obvious over Laub and/or Aklog. Pet. 42–48; Ex. 1003 ¶¶ 99–109. Petitioner cites, for example, Laub's teaching that, in embodiments, "aspiration catheter . . . has a French size of at least 16 Fr" and Aklog's teaching that the "[c]annula . . . may be of any sufficient size, so long as it can be accommodated within a predetermined vessel, such as a medium to large vessel." Pet. 42–43 (citing Ex. 1012 ¶ 28; Ex. 1005, 11:12–14). According to Petitioner, a POSA would have had reasons to upsize Garrison's second catheter to 16 French or greater, to the extent necessary, for removing clots in larger vessels of the body (such as for treating PE). *Id.* at 45–46 (arguing a POSA would have reasonably expected success in upsizing Garrison's catheters from ~ 8–10 French to 16

French or larger). Petitioner argues that increasing catheter size or other characteristics would have been routine for medical device engineers and, further, that the art presumes POSAs would have had the requisite skill to use the size appropriate for the particular application. *Id.* (citing Ex. 1003 ¶¶ 105–108; Ex. 1012 ¶ 28 (listing a range of suitable sizes from 5–20 Fr)).

Having considered Petitioner's argument and evidence, as well as Patent Owner's counterarguments (which are unavailing at this stage as explained in Section III.E.2 below), we find that Petitioner has established that it is reasonably likely to succeed in showing that the combination of Garrison, Laub, and/or Aklog teaches or suggests all the limitations of claim 1's system and that a POSA would have combined the art's teachings as proposed with a reasonable expectation of success. Based on the preliminary record, Petitioner persuades us that a POSA would have had reasons for adding a stopcock (or similar flow controller valve) between the respective catheters and pressure sources as suggested by Garrison. *See, e.g.*, Ex. 1006 ¶¶ 130–134; Ex. 1003 ¶¶ 114–118. Moreover, Petitioner persuades us that Garrison's system, modified as proposed, would be configured to allow a user to close the valve while a pressure source (e.g., a pump) creates a negative pressure and vacuum between the closed valve and pump's inlet, which vacuum could be rapidly applied to a distal portion of the catheter upon opening the valve to facilitate clot aspiration. Pet. 37–39, 54–57; Ex. 1003 ¶¶ 93–95, 119–123. As for the proposed upsizing of Garrison's catheters to be 16 French or larger for use in larger vessels, the record at this stage suggests that would have been a routine and obvious change. *See, e.g.*, Ex. 1005, 11:12–23 (teaching catheters may be "any sufficient size" and can be "scaled and adapted" according to the vessels and clots being targeted for removal); Ex. 1022 ¶¶ 24–32 (testifying that it was

known among clinicians that aspiration catheter systems for one part of the vasculature may be used in other parts, and routinely adapted (e.g., resizing of catheters) if needed).

2. Patent Owner's Counterarguments on Claim 1

Patent Owner argues that Petitioner's combination of Garrison with Laub and/or Aklog "do[es] not disclose or render obvious multiple key limitations." Prelim. Resp. 38. According to Patent Owner, Petitioner "mixes and matches" embodiments of Garrison in an effort to show that Garrison renders obvious claim 1's recited first and second "fluid control device[s]" and "pressure source[s]" that are configured to "generate" and release a vacuum pressure when the fluid control devices are, respectively, closed and opened. *Id.* at 38–45 (noting, e.g., that Garrison's Figure 33 does not include any "fluid control devices" and Figure 34 includes only a single 3-way stopcock); Prelim. Sur-reply 2–3.

This argument is unpersuasive on the present record. We see no flaw in Petitioner's alleged mixing and matching of embodiments of Garrison—all of which are addressed in a relatively short section of Garrison describing "Exemplary Embodiments of Aspiration and Flow Control." Ex. 1006 ¶¶ 130–142. Indeed, these disclosures in Garrison suggest that features of those embodiments may be combined. *See, e.g.*, *id.* ¶ 130 (stating, "[d]escribed herein are aspiration and flow control elements configured to be used with an arterial access device, a guide catheter, and/or a catheter of the disclosed system" and "[a]ny or all of the arterial access device 2010 and the catheter 2030 may be connected to sources of passive or active aspiration . . . on the devices"); *see also id.* ¶ 134 (describing an exemplary connection

between a locking syringe and "the flow controller," which flow controller and variants is described in more detail in paragraph 133).[14]

Patent Owner further argues that Petitioner and its expert are "incorrect" that incorporating two separate valves into the system depicted in Garrison's Figure 33 would provide the physician with more flexibility. Prelim. Resp. 45–46. According to Patent Owner, a user could just directly control the pressure sources (e.g., turn on/off), and adding valves on each line would only complicate the system. *Id.* (citing Ex. 2003 ¶ 76).

This argument is unavailing. Petitioner explains, with the supporting testimony of Mr. Thornton, that including two valves and positioning them on the fluid lines as proposed involves a simple modification and would have placed the valves closer to the operative site for ease of use by the operating physician. Ex. 1003 ¶¶ 114, 117. That a POSA would not see a potential benefit in providing means to control each flow line (separate from, for example, directly turning the pressure sources on or off at the pressure source) is also undermined by Garrison. *See, e.g.*, Ex. 1006 ¶ 133 (describing the use of an in-line flow controller that may allow a single operator to control each of multiple flow lines (with, for example simple slider buttons or switches that allow for control of the level and source of aspiration), which controller is distinct from the aspiration sources), Fig. 35;

[14] Garrison also broadly suggests that "[c]ertain features that are described in this specification in the context of separate embodiments can also be implemented in combination in a single embodiment" and "various features that are described in the context of a single embodiment can also be implemented in multiple embodiments separately or in any suitable sub-combination." Ex. 1006 ¶ 175.

see also id. ¶ 132 (disclosing stopcocks and flow controllers as alternatives for controlling fluid flow in aspiration lines).

Patent Owner also argues that a POSA would not have been motivated to add a 3-way or 4-way stopcock on each flow line (as alleged "fluid control devices" cited by Petitioner) in the system depicted in Garrison's Figure 33. Prelim. Resp. 48–51 (citing Ex. 2003 ¶¶ 80–81). If, Patent Owner explains, a 3-way stopcock would have been added to two portions of tubing—rather than three portions of tubing—one port of the stopcock would always be open and exposed to the surrounding environment. *Id.* And, when this stopcock was placed into fluid connection with a pressure source and actuated, air would be sucked into the unconnected port and "be reinfused into the patient in real-time causing a dangerous and potentially deadly air embolism." *Id.*

We acknowledge Patent Owner's argument insofar as it seizes on Petitioner's assertion that "the same valve" in Garrison's Figure 34 could be used in a modified system of Garrison's Figure 33. Prelim. Resp. 48 (citing Pet. 51); Ex. 1006, Fig. 34 (depicting valve 3325 as an apparent 3-way stopcock, connecting three tubing sections). Nonetheless, the obviousness analysis presumes that the POSA is one of "ordinary creativity, not an automaton." *KSR*, 550 U.S. at 421. As one of ***skill***, the POSA would not simply have used a stopcock with an open port that would allow air to be sucked into the system (or blood to spill out of it). But that does not mean that a skilled artisan would have forgone the use of Garrison's stopcocks altogether. We reject the premise of Patent Owner's argument to the contrary. *In re Sovish*, 769 F.2d 738, 743 (Fed. Cir. 1985) (rejecting an argument that "presumes stupidity rather than [ordinary] skill"). As Petitioner contends, stopcocks are well-known and simple mechanical

structures, Garrison describes 3-way or 4-way stopcocks as exemplary, and, even if a 3-way stopcock was used to connect only two tubing sections, a POSA would have readily understood how to prevent air ingress, such as by capping the unused port. Prelim. Reply 7 (citing Ex. 1006 ¶ 132; Ex. 1003 ¶ 135).[15]

Patent Owner argues that, contrary to Petitioner's assertions, adding two valves to the system depicted in Garrison's Figure 33 would not achieve the "the maximum level of aspiration in a rapid fashion." Prelim. Resp. 51–54. According to Patent Owner, Garrison's disclosure on generation of vacuum pressure while a flow controller is closed and then releasing that pressure by opening the flow controller to "enable the maximum level of aspiration in a rapid fashion" is limited to Garrison's use of a syringe as the pressure source. *Id.* at 51–52 (citing Ex. 1006 ¶ 134). But, Patent Owner contends, Garrison's Figure 33 shows a peristaltic pump—not a syringe—as the pressure source. *Id.* at 53–55. Patent Owner argues that Petitioner ignores "fundamental difference[s]" between a syringe and a peristaltic pump, which allegedly lacks a fixed volume that is evacuated like a syringe and would not generate a vacuum as claimed. *Id.* (citing, e.g., Ex. 2003 ¶¶ 84–85 (testifying that, with a peristaltic pump, any "maximum level of aspiration" is dictated by the pump's rotational speed).

The merits of Patent Owner's argument about whether Garrison's pumps would generate a vacuum pressure as claimed will be best assessed

[15] Garrison also evidences that 2-way stopcocks (or at least stopcocks where no port is left open to the environment) were known and contemplates their use between a catheter and pressure source. *See, e.g.*, Ex. 1006 ¶ 129 (describing setup for testing aspiration rates where a stopcock is connected in line between a catheter and a locking syringe); Pet. 38–39.

on a full record at trial. As an initial matter, claim 1 does not recite a "maximum level of aspiration in a rapid fashion." At most, Patent Owner's argument (if accepted) may weaken some of Petitioner's reasoning for modifying Garrison's systems.

In any event, we are at this stage unpersuaded that a pump would not, when a fluid control valve is closed, generate a vacuum pressure and operate in the manner claimed. *See, e.g.*, Ex. 1003 ¶¶ 94–95 (testifying that a stopcock and aspiration pump would generate a vacuum). Garrison does not disclose that only syringes have such capability, and Garrison teaches, in the same paragraph where the cited "maximum level of aspiration in a rapid fashion" appears, that several alternative aspiration sources may be used in its systems ("active source[s] of aspiration may be an aspiration pump, a regular or locking syringe, a hand-held aspirator, hospital suction, or the like"). Ex. 1006 ¶ 134. Garrison's disclosure is, thus, not limited to use of syringes or even peristaltic pumps (as allegedly depicted in Figure 33). We also note (as pointed out by Petitioner) that the '910 patent indicates that ***both*** pumps and syringes generate and store negative/vacuum pressure in an aspiration system.[16] Ex. 1001, 7:28–41, dependent claim 5 (pressure sources comprise "an electric pump"); Prelim. Reply 5. That a skilled artisan would have understood that both syringes and pumps, like disclosed in Garrison, can generate a vacuum pressure to permit rapid aspiration of clots also finds further evidentiary support in Dr. Turk's testimony that he and fellow

[16] The '910 patent indicates that a negative relative pressure is a vacuum. *See, e.g.*, Ex. 1001, 6:57–60 ("The pressure source . . . is configured to generate (e.g., form, create, charge, build-up, etc.) a ***vacuum*** (***e.g., negative relative pressure***) and store the vacuum for subsequent application to the catheter subsystem[.]") (emphasis added).

surgeons have used pumps and syringes for that purpose since the early 2010s. Ex. 1022 ¶ 23.

Patent Owner argues that a POSA would not have been motivated to increase the size of Garrison's catheters to a size of 16 French or greater as allegedly disclosed in Laub and/or Aklog because doing so would have been dangerous to the patient. Prelim. Resp. 57–64. According to Patent Owner, with larger-diameter catheters (e.g., 10 French or larger) aimed at removing larger clots, significantly higher volumes of blood may be withdrawn during aspiration and, unless such blood is returned to the patient, they may bleed out or go into shock—particularly with systems that withdraw blood continuously and at high flow rates. *Id.* at 59–60. Patent Owner contends that both Laub and Aklog recognize the need to return aspirated blood to the patient. *Id.* at 59–62 (citing, e.g., Ex. 1005, 5:19–23, 7:23–26; Ex. 1012 ¶¶ 28, 45). The thrust of Patent Owner's argument, however, is that Garrison's systems (like shown in Figures 33 and 34) are "not suitable for returning blood" and, therefore, Garrison's systems would not be changed to use larger-sized catheters absent a means of returning aspirated blood to the patient. Prelim. Resp. 62–65 (citing Ex. 1006 ¶ 135; Ex. 2003 ¶¶ 91–97).

Patent Owner's arguments do not undermine Petitioner's challenge at this stage. We include the following preliminary observations: (1) Garrison teaches that blood may be returned to the patient and describes an exemplary pump that may be useful for doing so (*see, e.g.*, Ex. 1006 ¶ 136, Fig. 36)[17];

[17] Patent Owner argues that the pump of Garrison shown in Figure 36 is configured to provide for continuous, real-time aspiration and reinfusion of blood to the patient and, thus, is incompatible with a modification that would pause such continuous operation to allow a vacuum pressure to be generated

(2) although Garrison notes "disadvantages" with some aspiration sources, such as peristaltic pumps that may damage blood cells, or syringes when blood is received into an external reservoir and remains static over time (increasing a risk of thrombus formation), such "disadvantages" should be considered in context of the other cited art—Laub and Aklog, for example, teach that aspirated blood (including blood aspirated with conventional pumps, like centrifugal or peristaltic pumps) can safely be returned to the patient (Ex. 1012 ¶ 41; Ex. 1005, 12:9–14); (3) Laub and Aklog do not require continuous aspiration—their systems can run continuously or intermittently (*see, e.g.*, Ex. 1005, 12:6–9); (4) although Laub indicates that "[i]n certain embodiments, reinfusing the patient's blood continuously" at high flow rates can help dislodge clots (Ex. 1012 ¶ 45), we are persuaded at present that a POSA would have seen a benefit in a system that enabled an intermittent and rapid burst of suction pressure like provided in Petitioner's modified system of Garrison; and (5) the valve closure and vacuum generation would seem to be a temporary step to enable a rapid burst of suction—without blood being withdrawn from the patient during this brief window—so we are skeptical that potential blood loss or thrombus formation would have been a concern sufficient to discourage the proposed modification. Prelim. Reply 6 (asserting once Garrison's valve in the modified system is opened it could run continuously). The parties may consider further developing the trial record to address the above issues.

Lastly, Patent Owner argues that modifying Garrison's aspiration system to increase the size of its catheters to treat PE as proposed by

---

and to provide for a short burst of aspiration. Prelim. Resp. 65–68. We will revisit this argument, if preserved by Patent Owner at trial, on a full record.

Petitioner would render Garrison unsuitable for its intended purpose of treating cerebral clots. Prelim. Resp. 68–72. According to Patent Owner, upsizing Garrison's catheters from 8 French to 16 French would increase the cross-sectional area of the catheter by roughly four times. *Id.* at 70–71 (citing Ex. 2003 ¶ 103 (explaining that 1 French equals ~ 1/3 mm) and providing calculations). With this increased size, Patent Owner argues that the catheters could no longer safely fit within the cerebral vasculature to access clots residing in, for example, the middle cerebral artery (MCA). *Id.* at 70–71 (arguing (with citation to Ex. 2004, 5–7) a POSA would have understood the mean diameter of the MCA to be 2.55 ± 0.42 mm).

We acknowledge Patent Owner's argument and, based on this preliminary record, do not disagree that a catheter of 16 French or larger would not likely be considered for removing clots in the smaller vessels of the brain. A 16 French catheter's diameter would be ~ 5.3 mm and it is not evident how that could safely be used in, for example, the MCA having a diameter of ~ 2.5 mm. Nevertheless, the record here consistently reflects that skilled artisans would have considered the size of the catheters used relative to the size of the blood vessel and clot targeted to be a routinely optimizable variable. *See, e.g.*, Ex. 1005, 11:12–23 (catheter "may be of any sufficient size, so long as it can be accommodated within a predetermined vessel"); Ex. 1003 ¶¶ 71, 105–107 (testifying POSAs routinely optimized catheter size for different sized vasculatures). Aklog, although focused on removing larger clots from larger vessels, teaches that, "[o]f course, cannula . . . can be scaled and adapted for use within smaller vessels in the body and for removing relatively smaller volume or amount of undesirable material, if so desired." Ex. 1005, 11:20–23. We do not see why the converse would have been any less obvious—i.e., that smaller catheters (like exemplified in

Garrison) could have been and would have been made larger for removing undesirable material (e.g., larger clots) in larger blood vessels. Evidence here suggests such a modification would have been squarely within the capabilities of the POSA and more than just a hypothetical possibility. *See, e.g.*, Ex. 1003 ¶¶ 71, 105–107; Ex. 1023 ¶¶ 27–37 (citing "real-world" development of aspiration systems involving upsizing of cerebral applications to treat peripheral applications).[18]

3. Conclusion

For the reasons above and based on the record at this stage, we find Petitioner has met its institution burden, and established that it is reasonably likely to prevail in showing that at least claim 1 is unpatentable over the combination of Garrison with Laub and/or Aklog.

F. Other Grounds (Grounds 4–9)

Petitioner's other grounds challenge various dependent claims and rely on the further addition of features taught or suggested in Hartley and/or Pasha to the combination of Garrison with Laub and/or Aklog. *See, e.g.*, Pet. 75–82 (asserting that it would have been obvious to use Hartley's hemostasis valve in a modified aspiration system of Garrison). Patent Owner provides no counterargument against Grounds 4–9 beyond its counterargument for Grounds 1–3. Prelim. Resp. 73. That counterargument is unavailing at this preliminary stage as we explained above.

---

[18] Patent Owner cites the Examiner's conclusion during prosecution that "[i]t would be unreasonable to modify the clot treatment system of Garrison to be used for pulmonary embolisms." Prelim. Resp. 72–73 (citing Ex. 1002, 49). Yet the Examiner never explained why this would have been "unreasonable" and, based on the record here, it appears upsizing/downsizing of catheters within an aspiration system to optimize for different parts of the vasculature would have involved no more than the routine work of the POSA.

IV. CONCLUSION

Based on this preliminary record, we determine that Petitioner has shown a reasonable likelihood that it will prevail with respect to at least one of the claims challenged in the Petition. We institute trial on all challenged claims under the grounds raised in the Petition. *PGS Geophysical AS v. Iancu*, 891 F.3d 1354, 1360 (Fed. Cir. 2018) (explaining that institution of *inter partes* review "require[s] a simple yes-or-no institution choice . . . embracing all challenges included in the petition"); 37 C.F.R. § 42.108(a).

Any argument not raised in a Patent Owner Response to the Petition, or as permitted in another manner during trial, shall be deemed forfeited and/or waived even if asserted in the Preliminary Response. *In re Google Tech. Holdings LLC*, 980 F.3d 858, 862–64 (Fed. Cir. 2020) (holding an argument forfeited when not timely raised before the Board); *In re NuVasive, Inc.*, 842 F.3d 1376, 1380–81 (Fed. Cir. 2016) (holding Patent Owner waived an argument addressed in the Preliminary Response by not raising the same argument in the Patent Owner Response).

V. ORDER

In consideration of the foregoing, it is hereby:

ORDERED that, pursuant to 35 U.S.C. § 314(a), *inter partes* review of all challenged claims of the ’910 patent is instituted on the grounds of unpatentability set forth in the Petition; and

FURTHER ORDERED that, pursuant to 35 U.S.C. § 314(a) and 37 C.F.R. § 42.4, notice is given of institution of trial commencing on the entry date of this Decision.

FOR PETITIONER:

Joshua J. Stowell
Brian C. Barnes
Joseph R. Re
KNOBBE, MARTENS, OLSON & BEAR, LLP
2jys@knobbe.com
2bcb@knobbe.com
2jrr@knobbe.com

FOR PATENT OWNER:

Joseph Hamilton
Paul Parker
Matthew Williams
PERKINS COIE LLP
hamilton-ptab@perkinscoie.com
parker-ptab@perkinscoie.com
williams-ptab@perkinscoie.com