US 20040092962A1

(19) United States

(12) Patent Application Publication

Thornton et al.

(10) Pub. No.: US 2004/0092962 A1

(43) Pub. Date: May 13, 2004

(54) MULTI-CATHETER STEERABLE GUIDING SYSTEM AND METHODS OF USE

(75) Inventors: **Troy L. Thornton**, San Francisco, CA (US); **Brian B. Martin**, Boulder Creek, CA (US); **Amy R. Raatikka**, San Francisco, CA (US); **Yen C. Liao**, San Mateo, CA (US); **William D. Kolosi**, San Francisco, CA (US); **Pedro Lucatero**, East Palo Alto, CA (US)

Correspondence Address:
TOWNSEND AND TOWNSEND AND CREW, LLP
TWO EMBARCADERO CENTER
EIGHTH FLOOR
SAN FRANCISCO, CA 94111-3834 (US)

(73) Assignee: **EVALVE, INC., a Delaware Corporation**, Redwood City, CA

(21) Appl. No.: **10/441,508**

(22) Filed: **May 19, 2003**

Related U.S. Application Data

(63) Continuation-in-part of application No. 09/894,463, filed on Jun. 27, 2001, which is a continuation-in-part of application No. 09/544,930, filed on Apr. 7, 2000, now Pat. No. 6,629,534.

(60) Provisional application No. 60/128,690, filed on Apr. 9, 1999.

Publication Classification

(51) **Int. Cl.**[7] **A61B 17/10**

(52) **U.S. Cl.** **606/139**

(57) **ABSTRACT**

Devices, systems, methods and kits are provided for endoscopically accessing a body cavity and providing a directed pathway toward a target tissue within the cavity. The directed pathway is provided by a multi-catheter guiding system which is positioned in a desired configuration, generally directed toward the target tissue. Interventional devices may then be passed through the guiding system to the target tissue. Depending on the location of the target tissue and the desired angle of approach, the guiding system may be required to maintain one or more curves in one or more planes to properly direct the interventional devices. The multi-catheter guiding system of the present invention comprises an outer guiding catheter and a coaxially positioned inner guiding catheter, each of which independently form curvatures so that together the curves properly direct the interventional device.

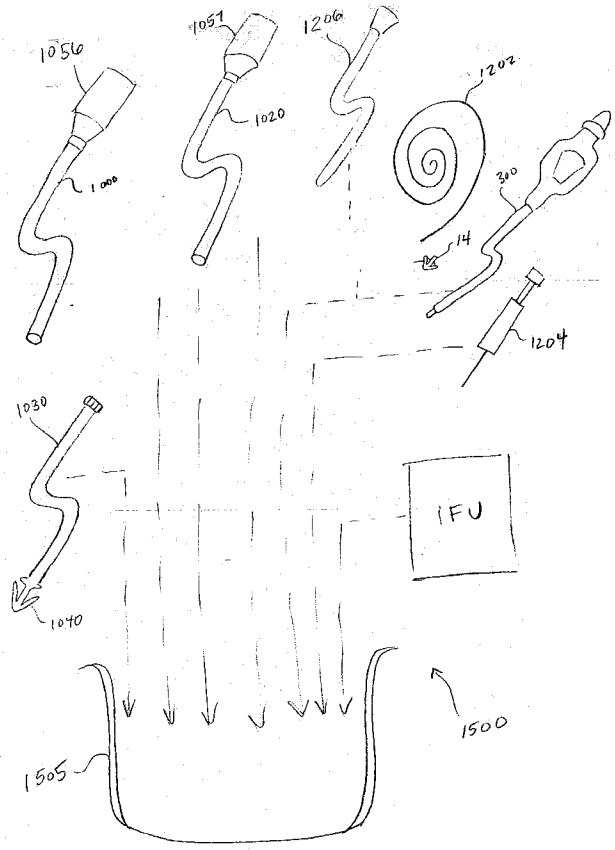

Imperative Care v. Inari Medical
IPR2025-01021
Imperative Care Ex. 1079

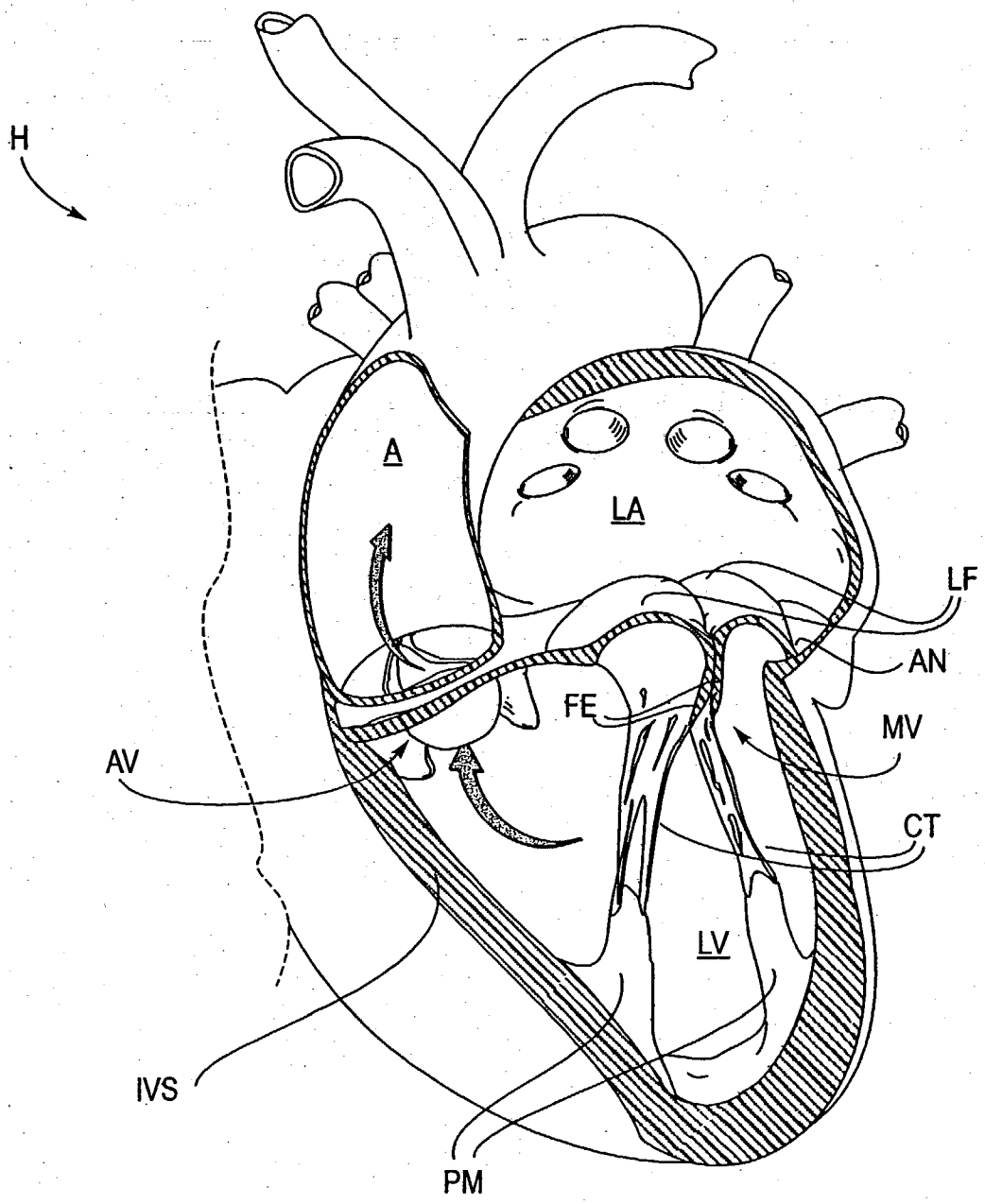

Fig. 1

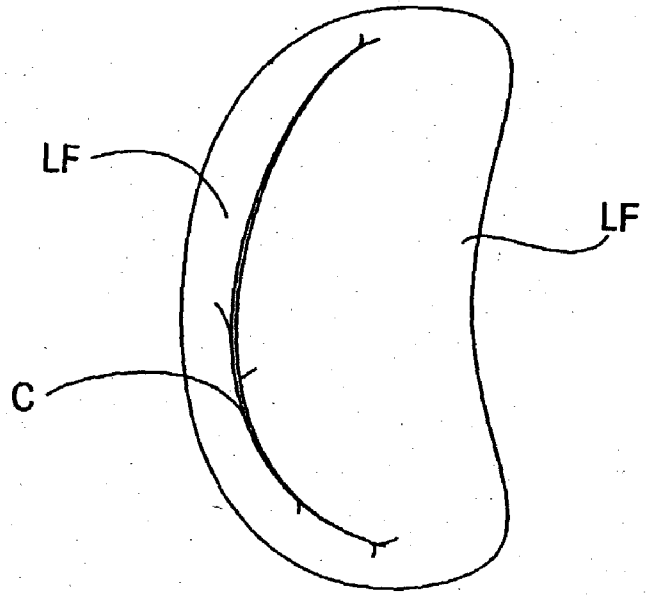

Fig. 2A

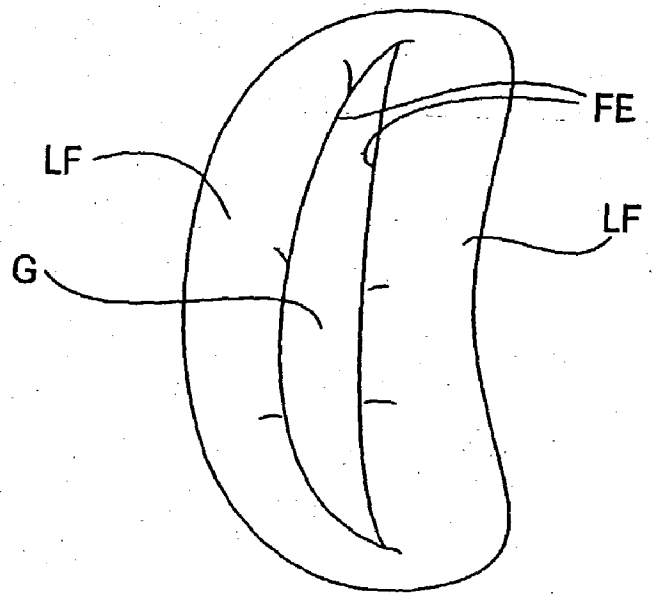

Fig. 2B

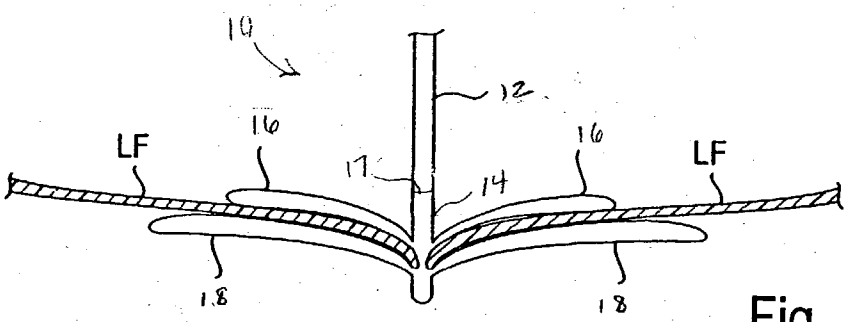

Fig. 3A

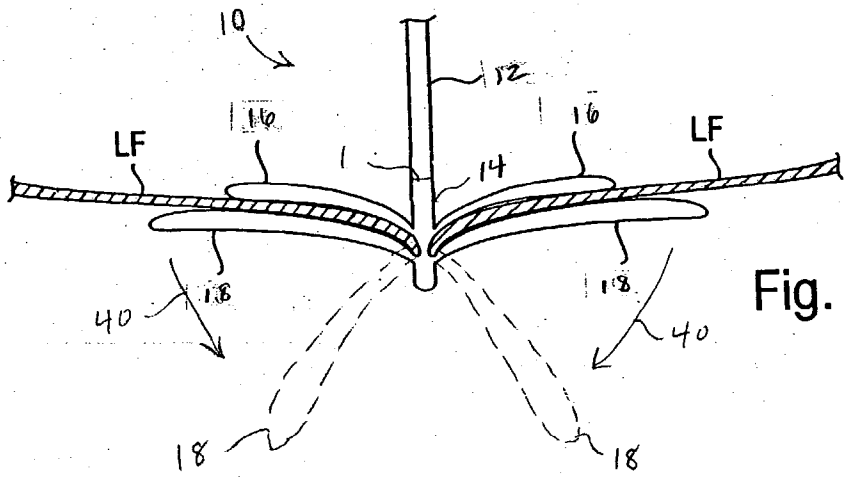

Fig. 3B

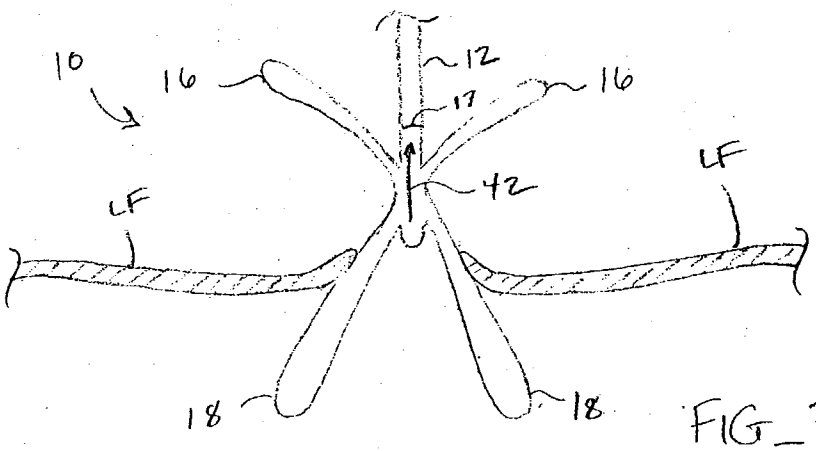

FIG_3C

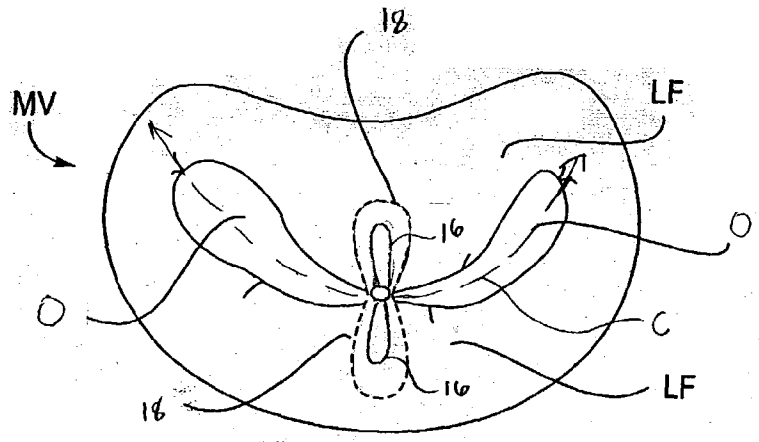

FIG_4

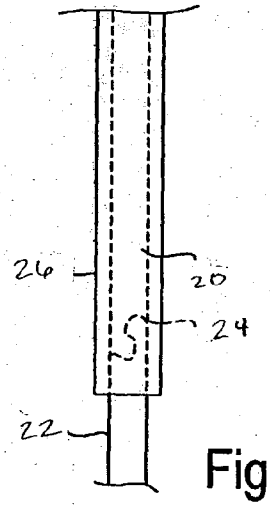

Fig. 5A

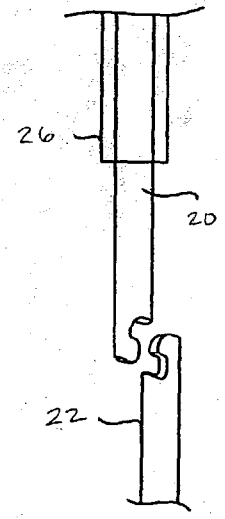

Fig. 5B

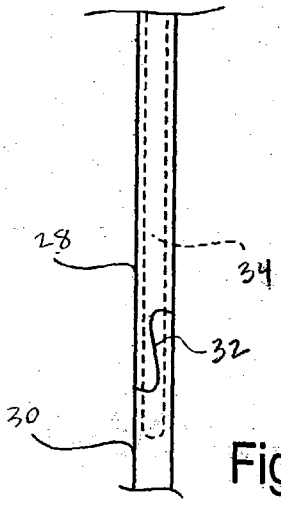

Fig. 6A

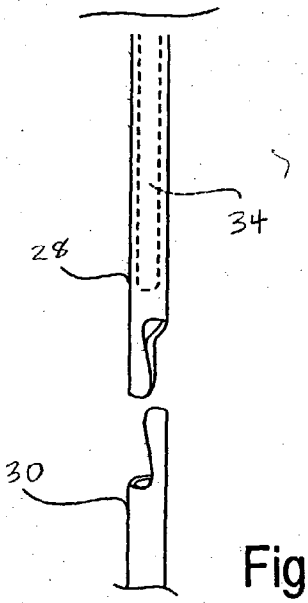

Fig. 6B

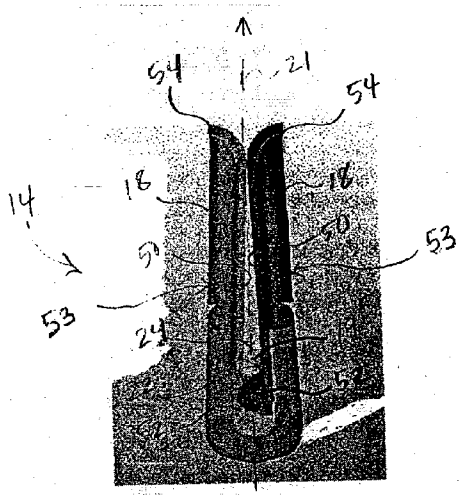

FIG_7A

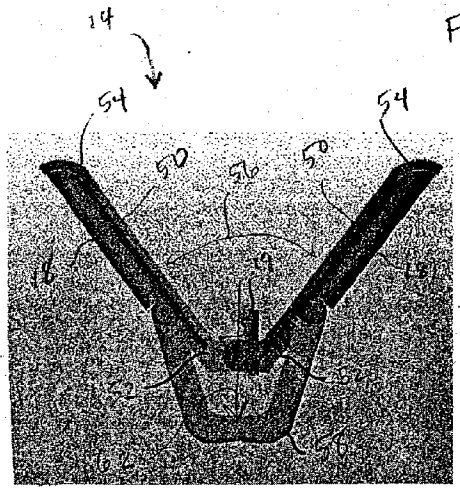

FIG_7B

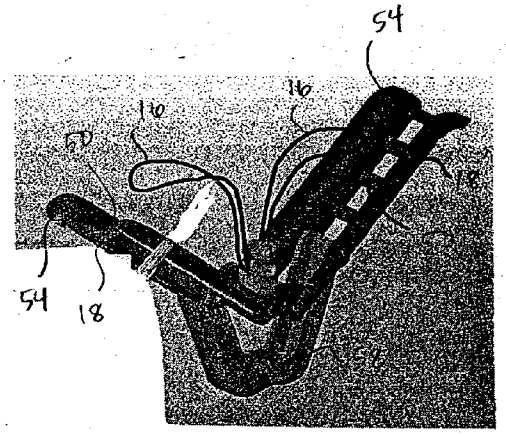

FIG_7C

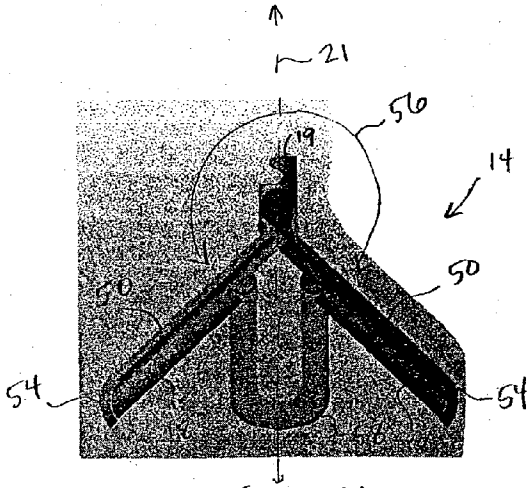

FIG_7D

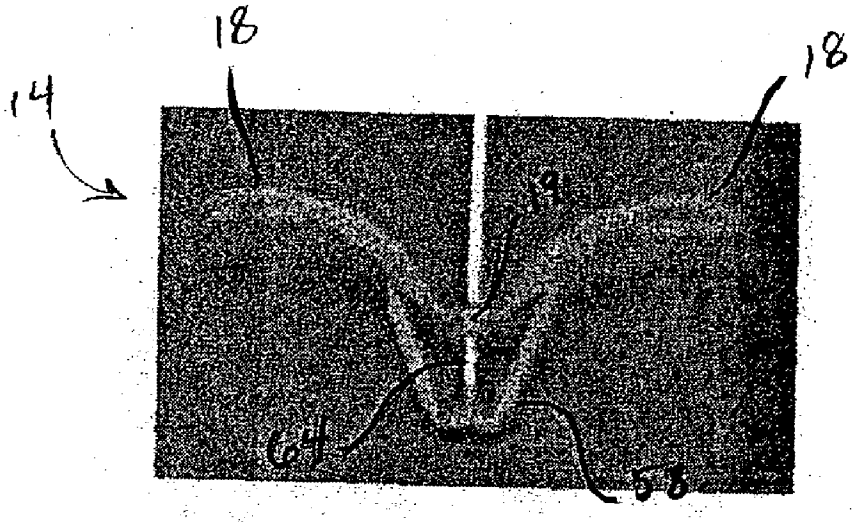

FIG. 8A

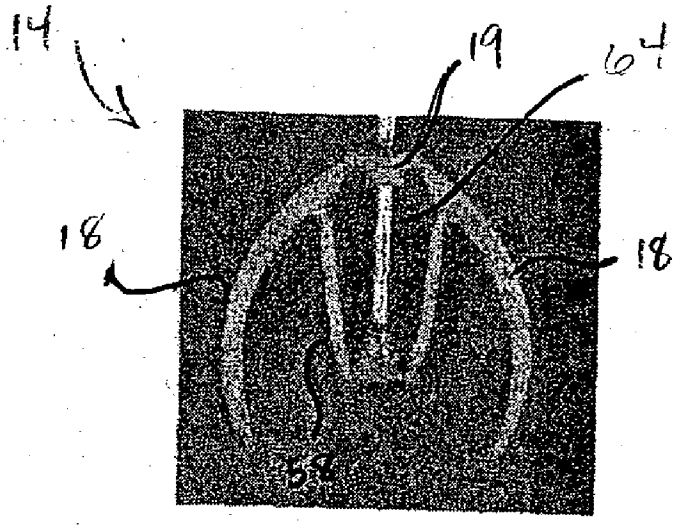

FIG. 8B

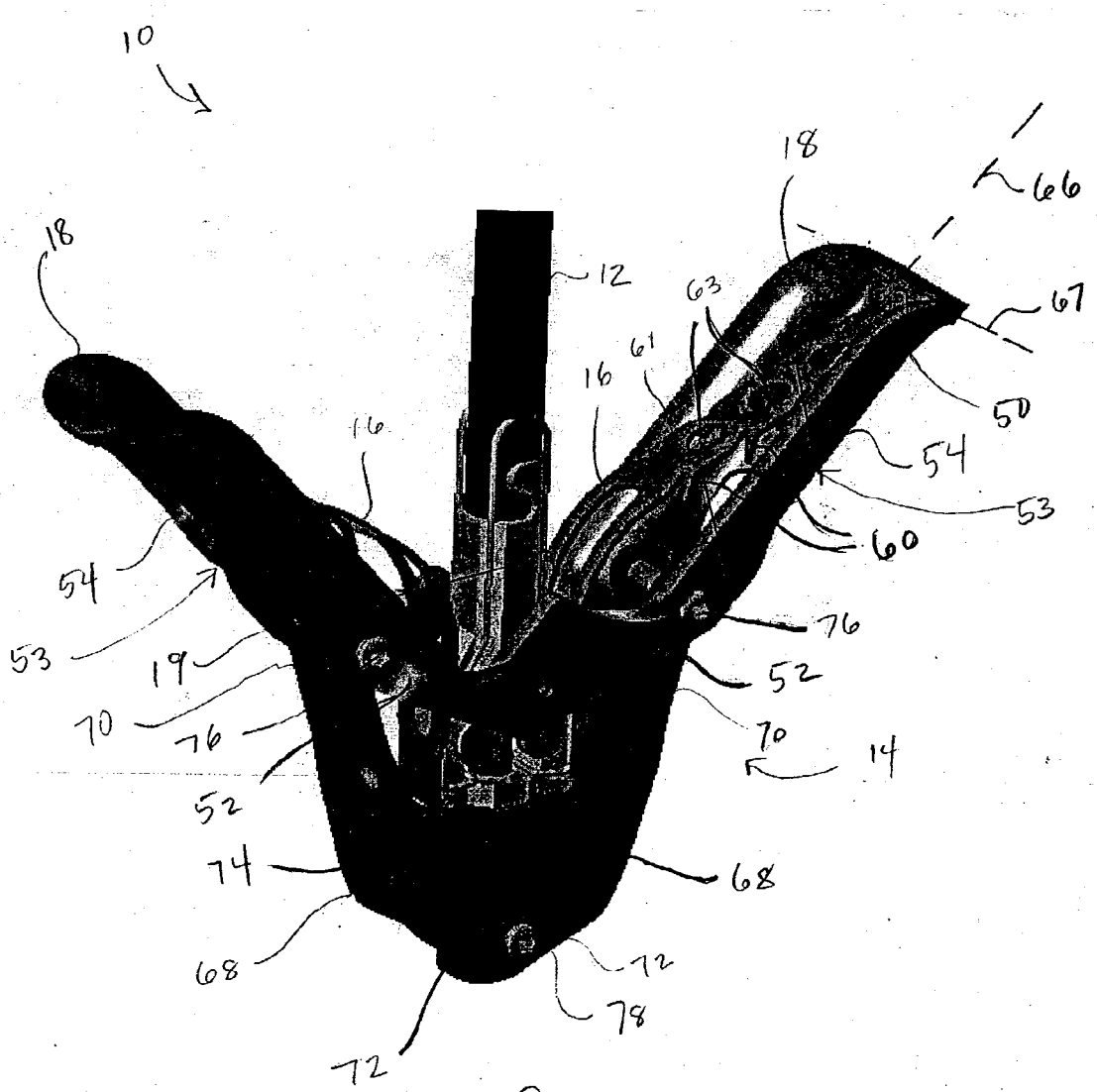
10
18
18
12
63
61
16
16
66
67
50
54
53
60
76
52
70
14
54
53
19
70
76
52
74
68
68
72
78
72

FIG-9

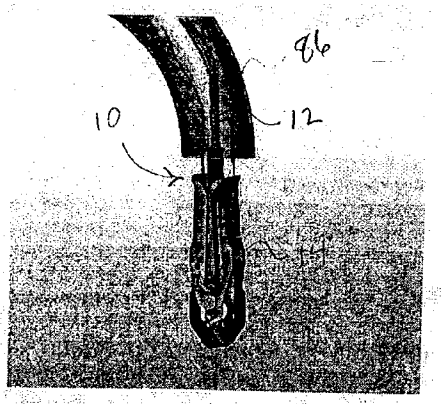

FIG_10A

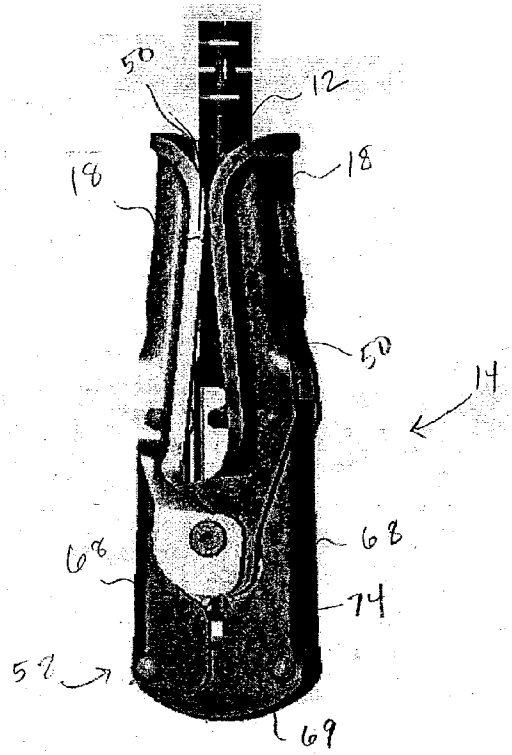

FIG_10B

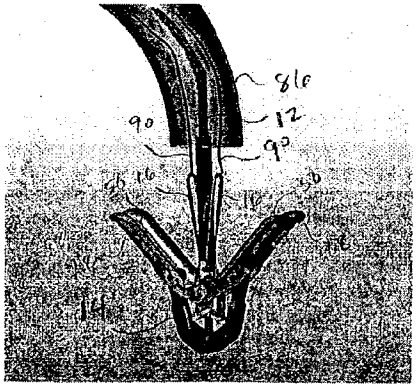

FIG_11A

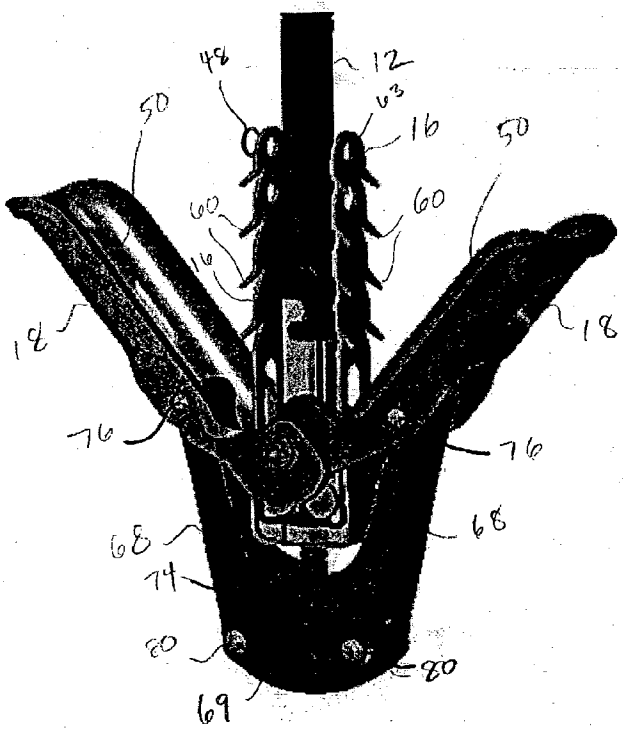

FIG_11B

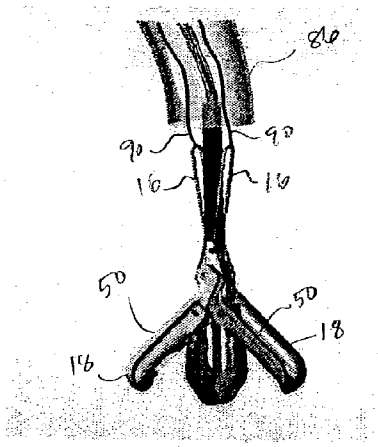

FIG-12A

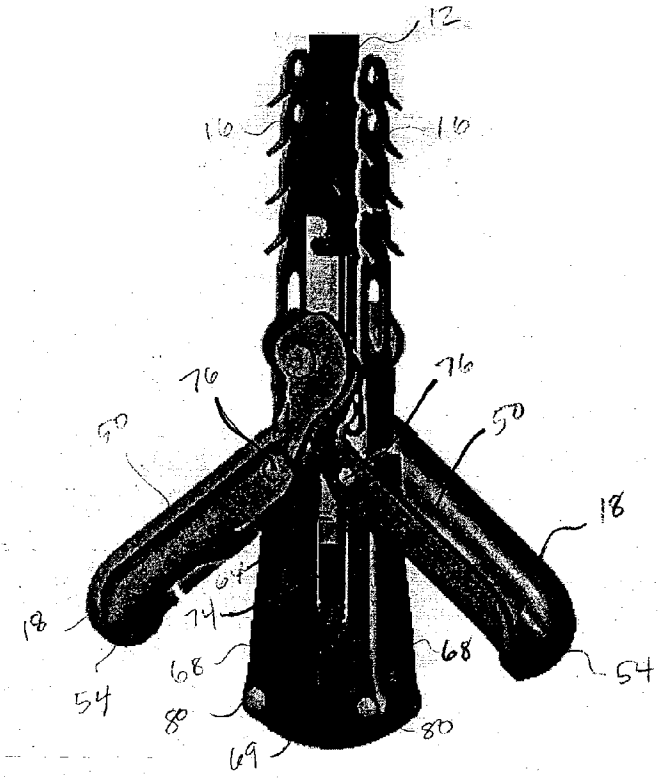

FIG-12B

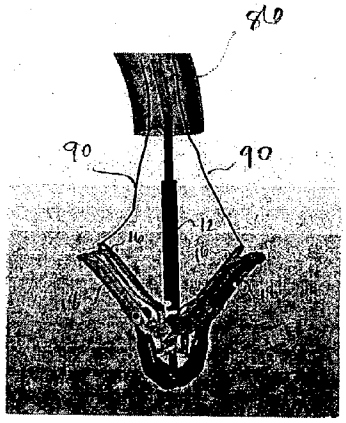

FIG-13A

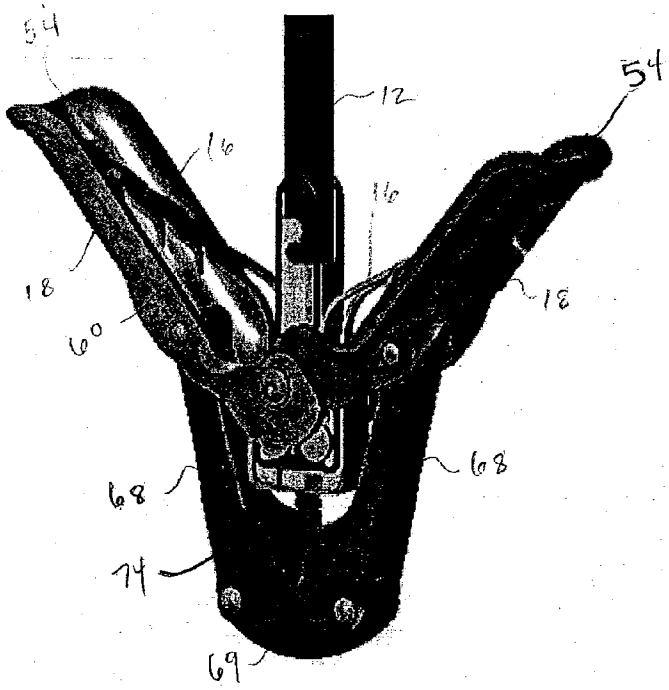

FIG-13B

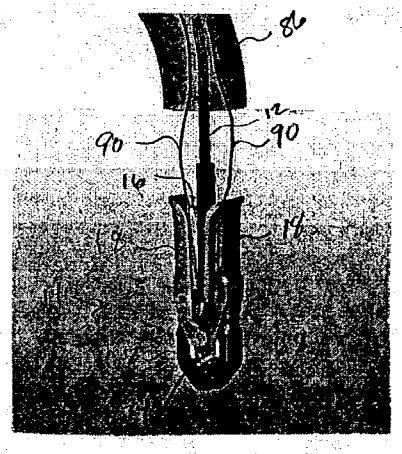

FIG_14

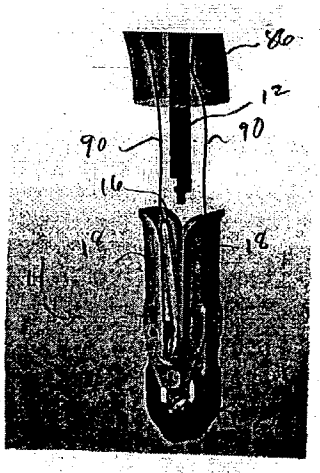

FIG_15

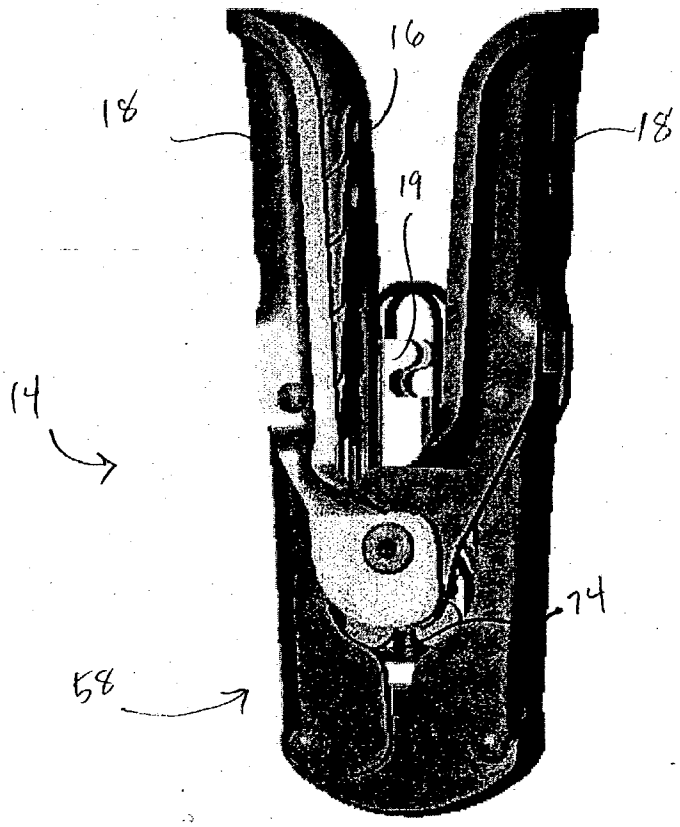

FIG_16

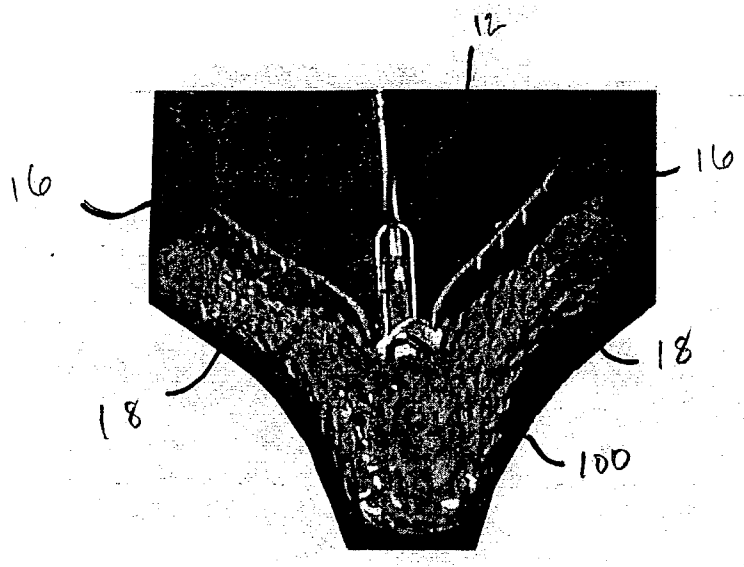

FIG-17A

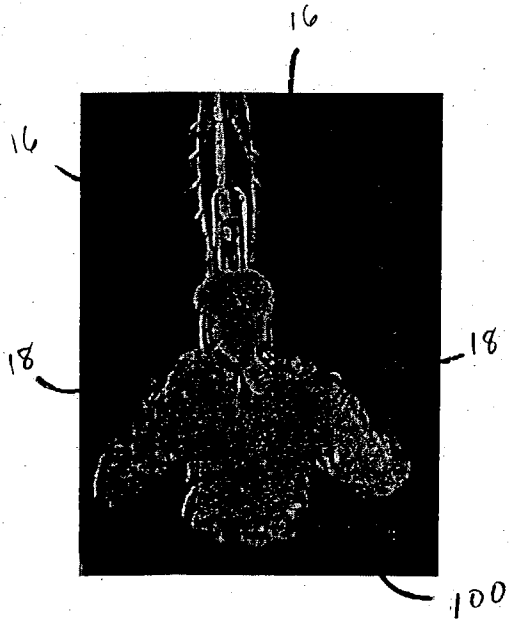

FIG-17B

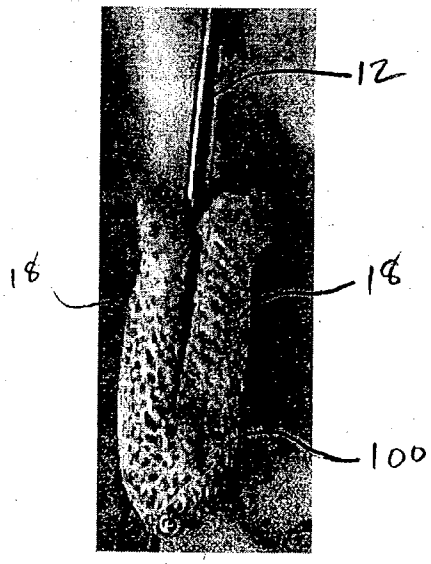

FIG-17C

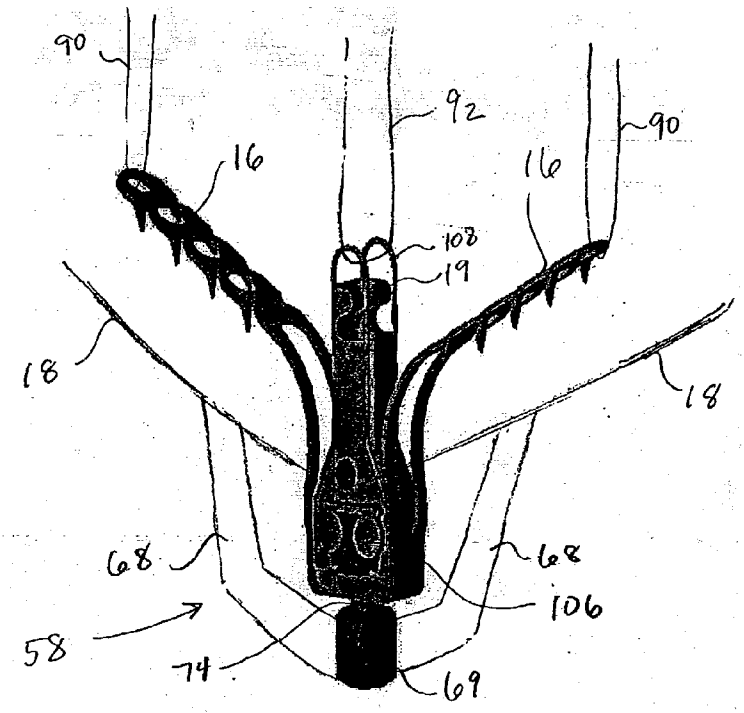
90
92
90
16
16
108
19
18
18
68
68
106
58
74
69

FIG-18

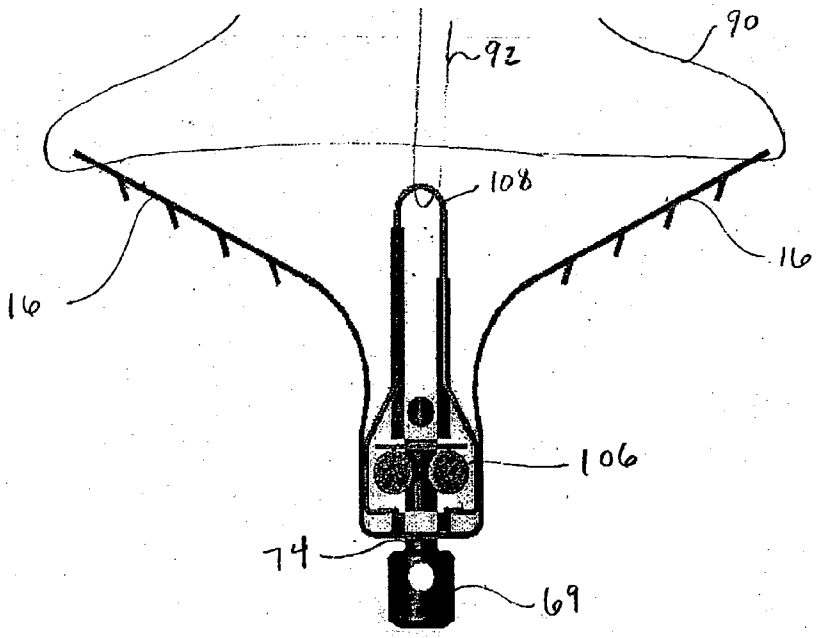
92
90
108
16
16
106
74
69

FIG-19

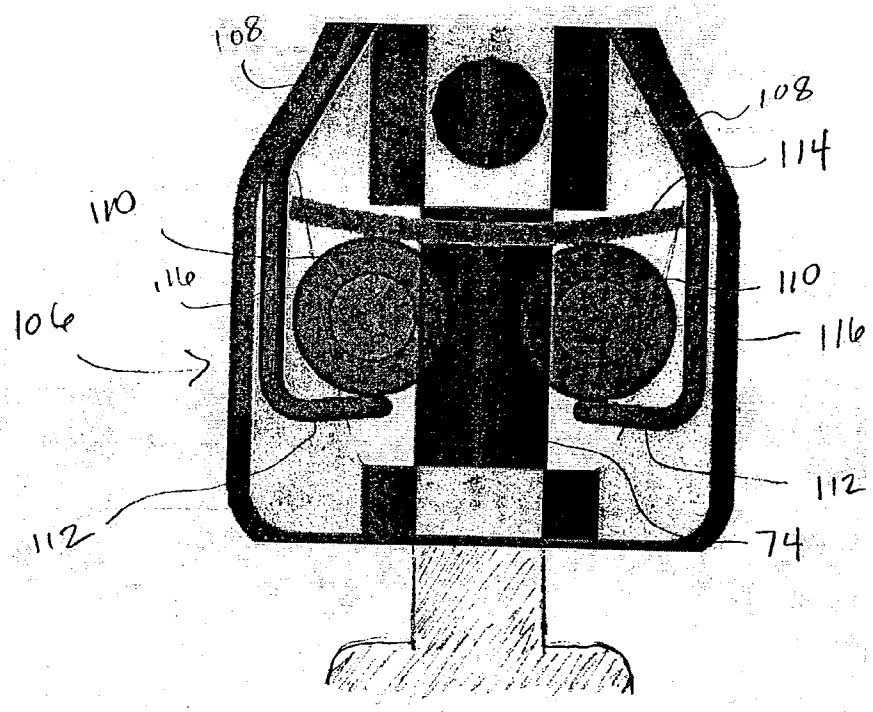
108
108
114
110
110
116
116
106
112
112
74

FIG-20

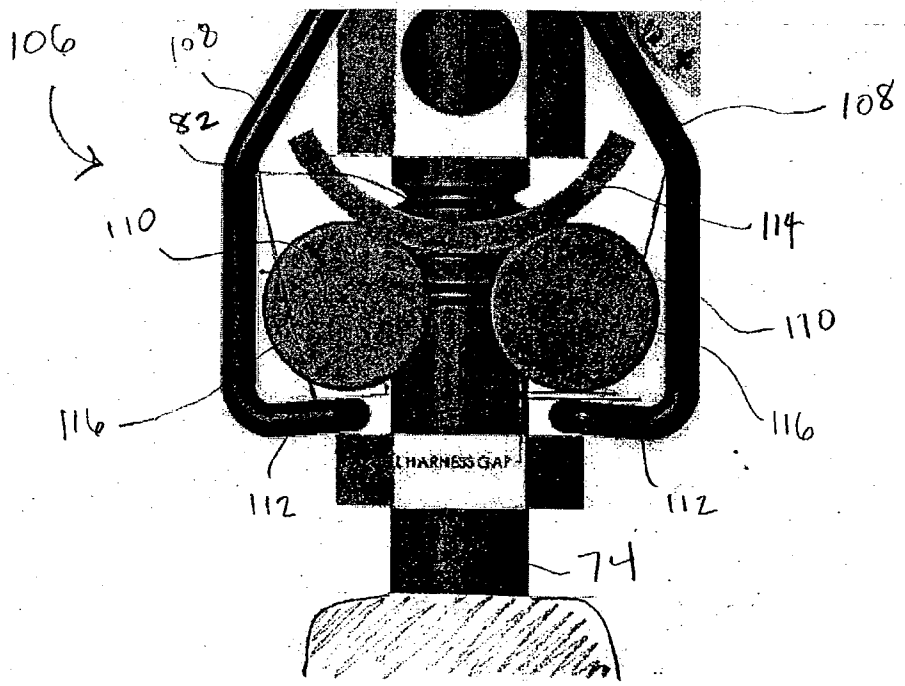
106
108
108
82
114
110
110
116
116
HARNESS GAP
112
112
74

FIG-21

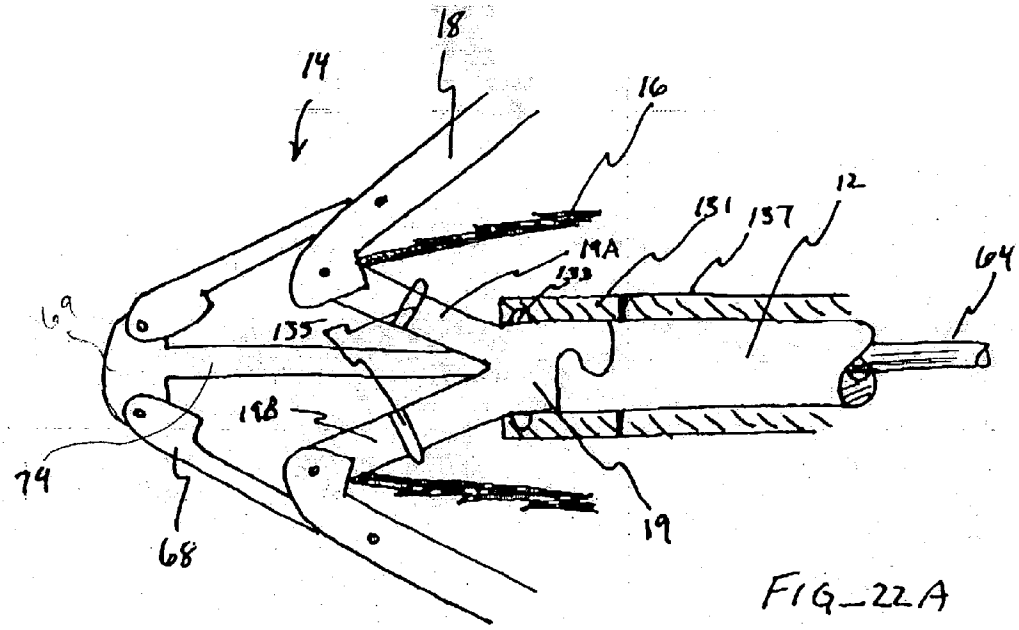

FIG_22A

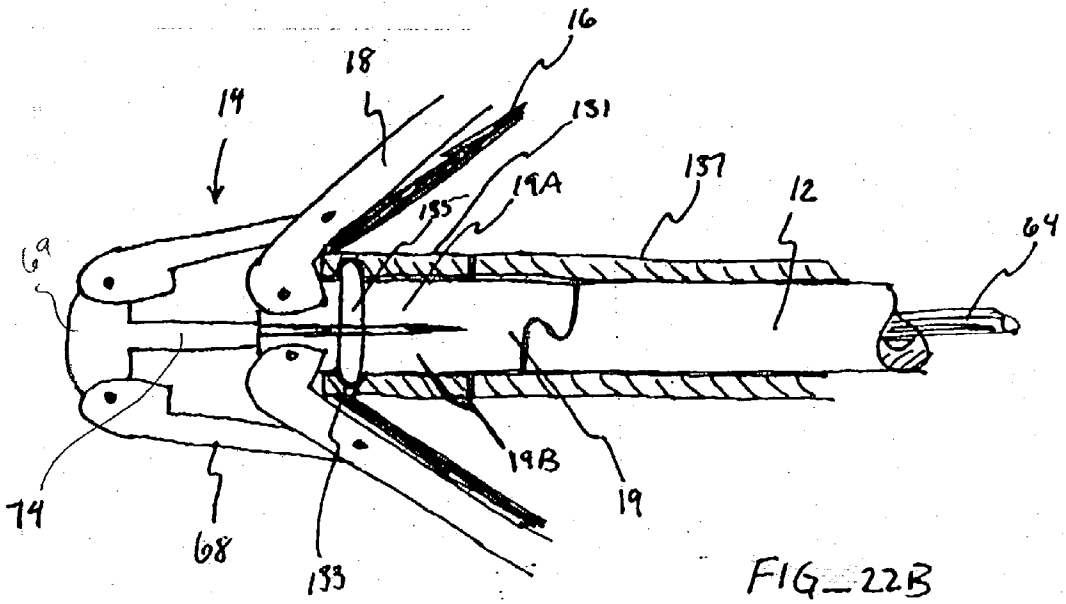

FIG_22B

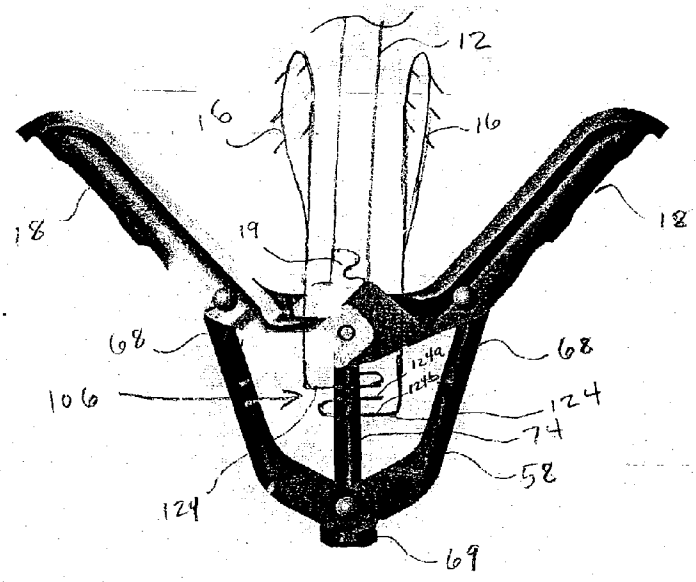

FIG. 23

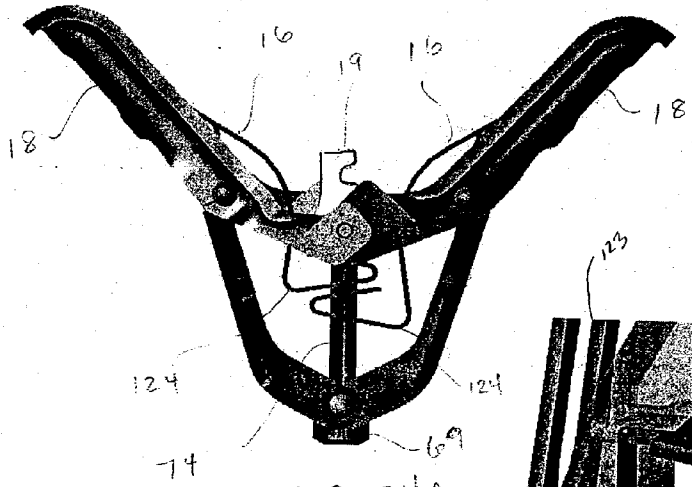

FIG. 24A

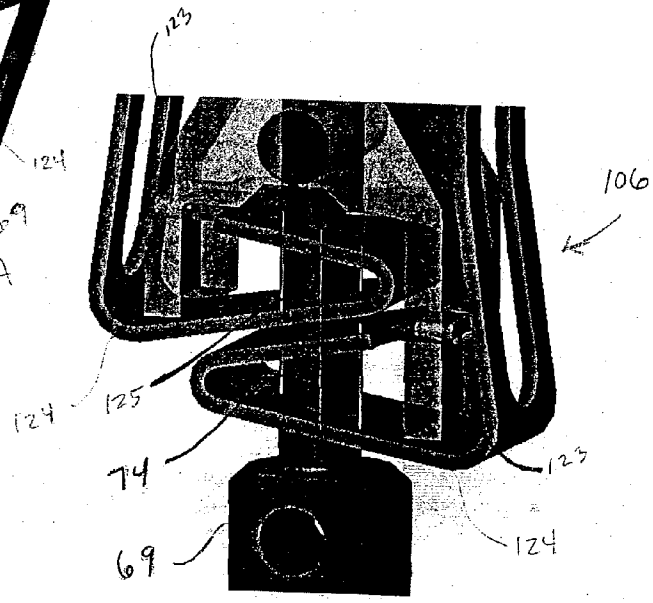

FIG. 24B

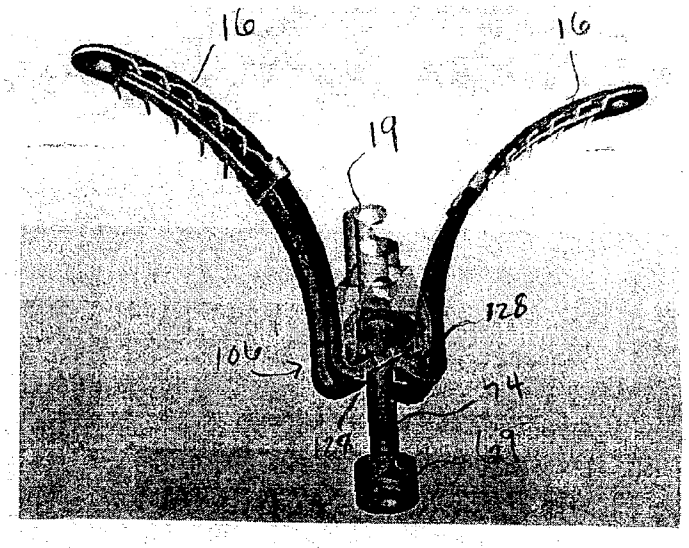

FIG_25

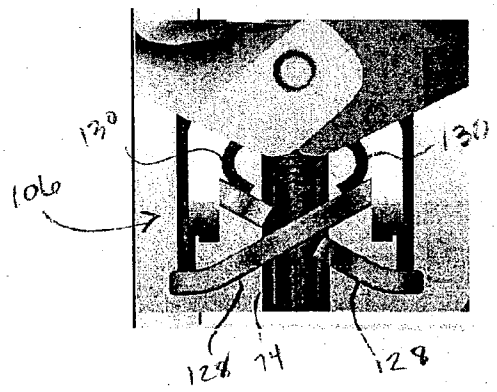

FIG_26A

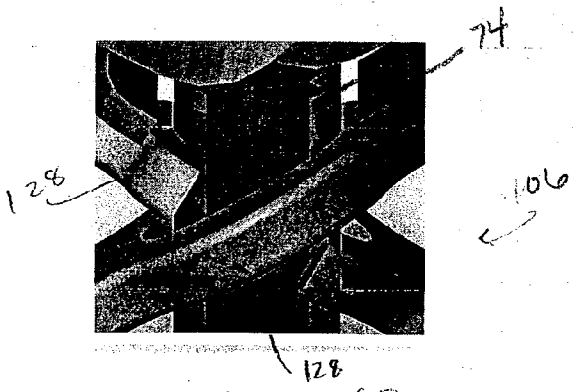

FIG_26B

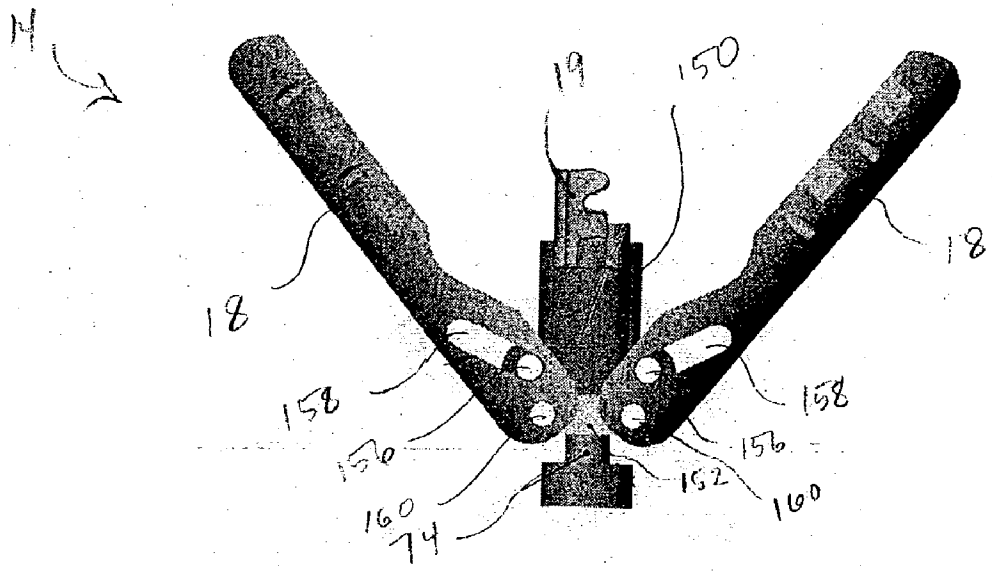
14
19
150
18
18
158
158
156
156
152
160
160
74

FIG-27

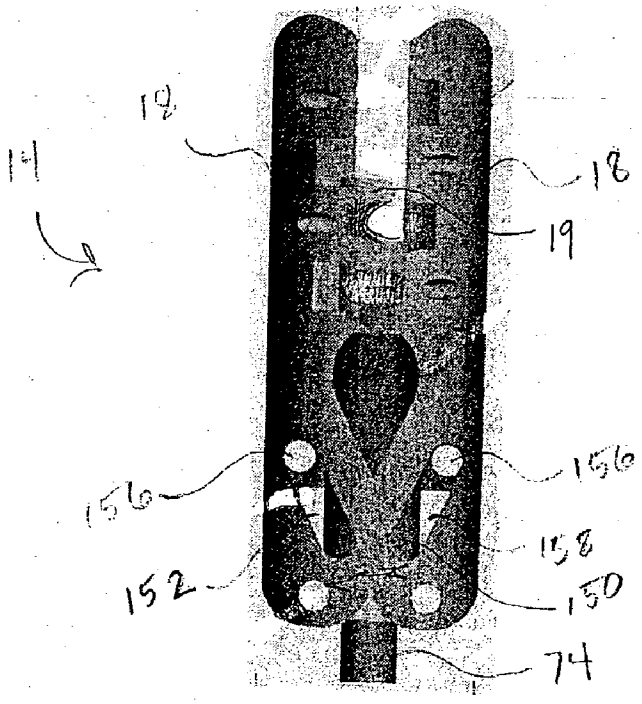
18
14
18
19
156
156
158
152
150
74

FIG-28

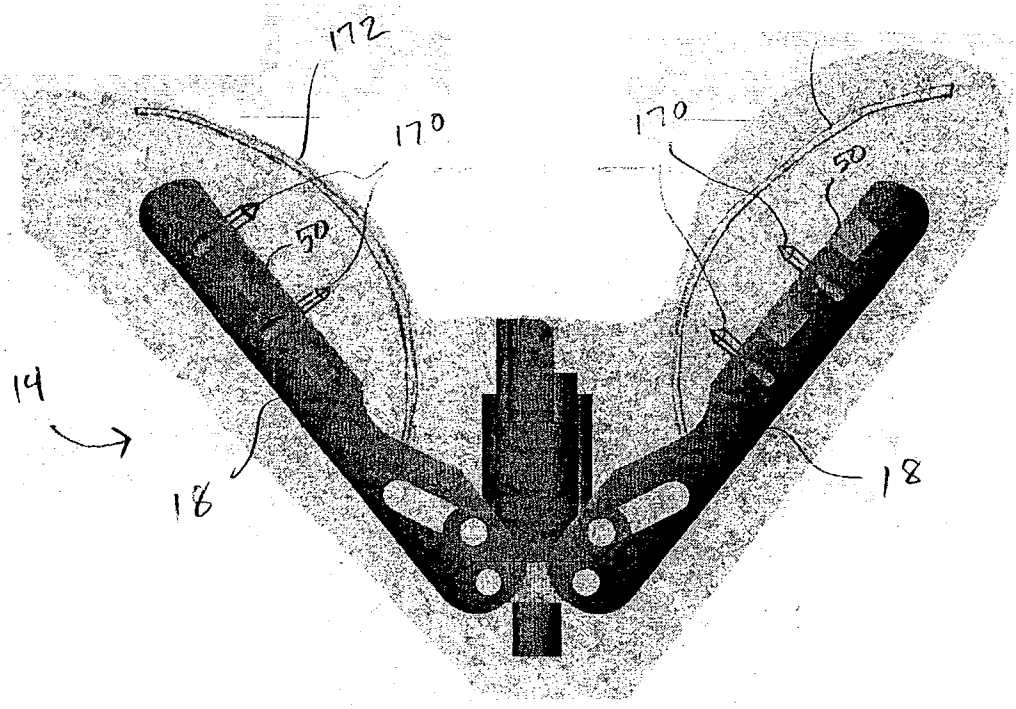

FIG_29

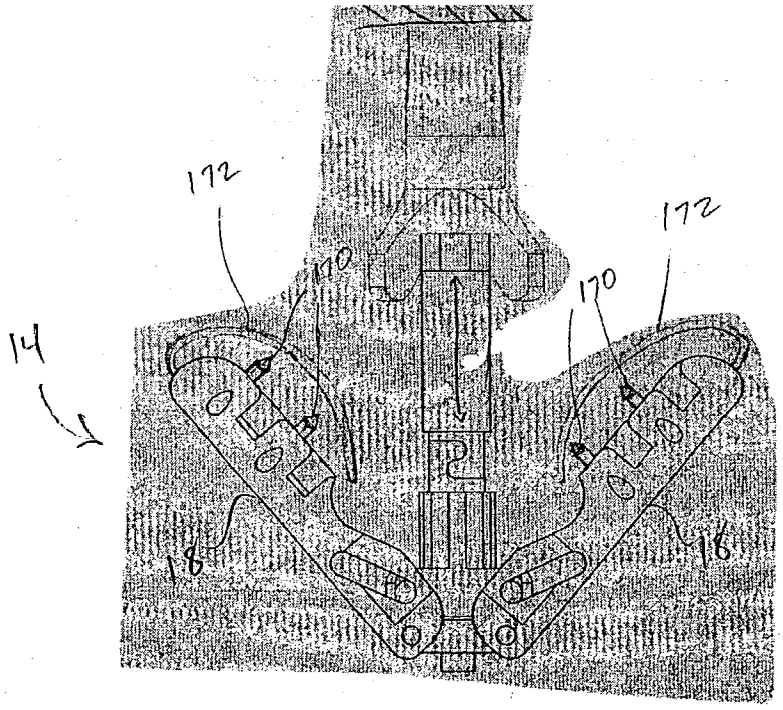

FIG_30

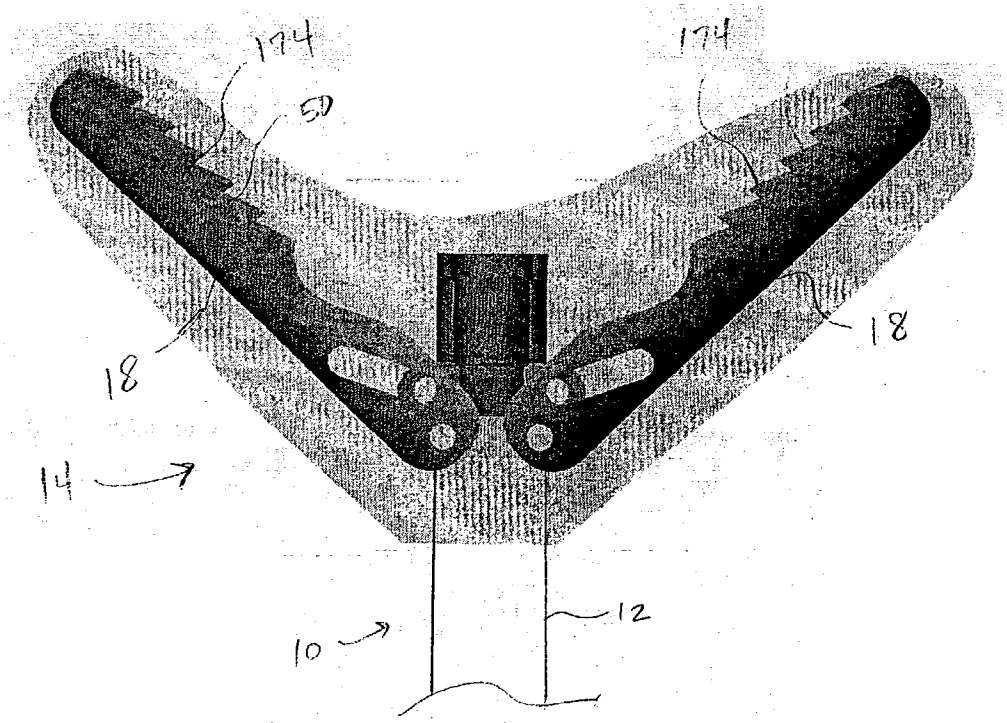
174
174
50
18
18
14
10
12

FIG_31

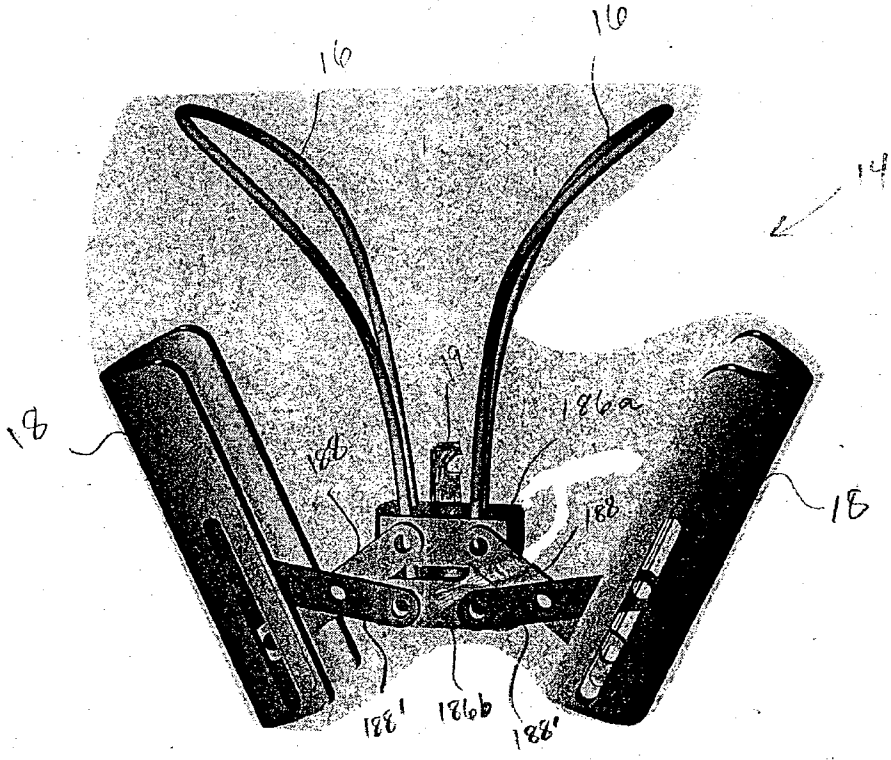
16
16
14
18
18
19
186a
188
188
188'
186b
188'

FIG_32

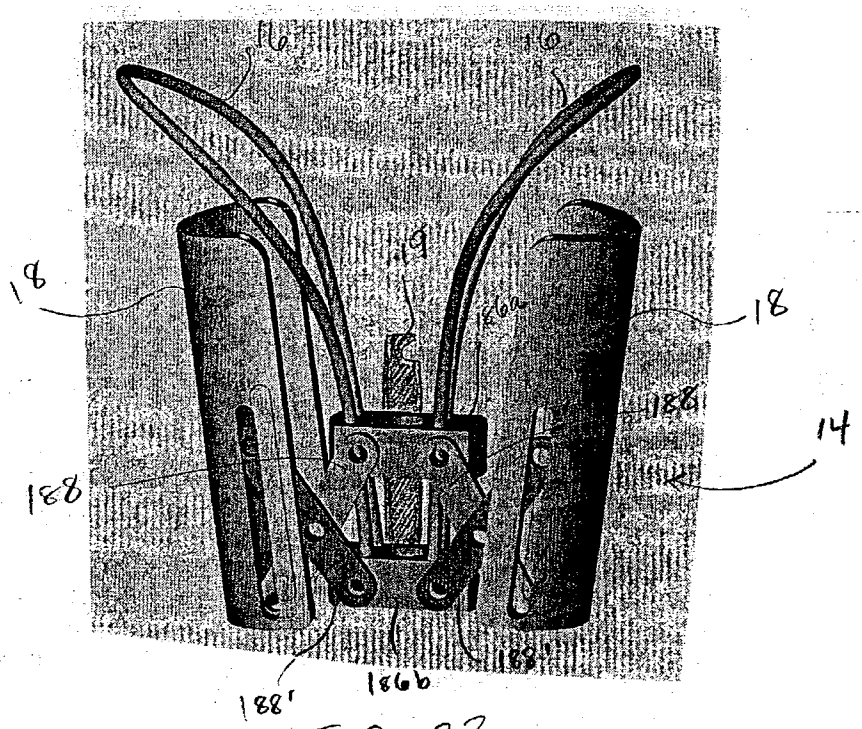

FIG_33

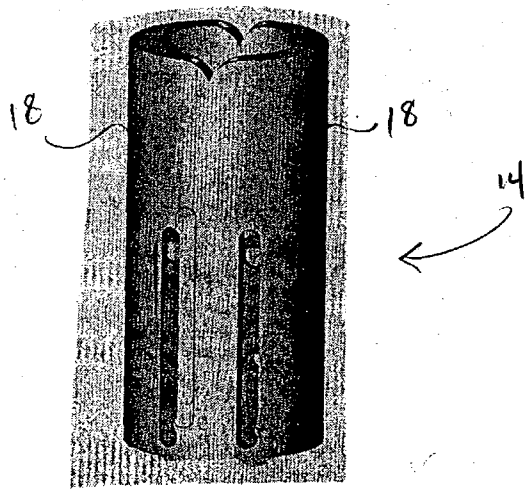

FIG_34

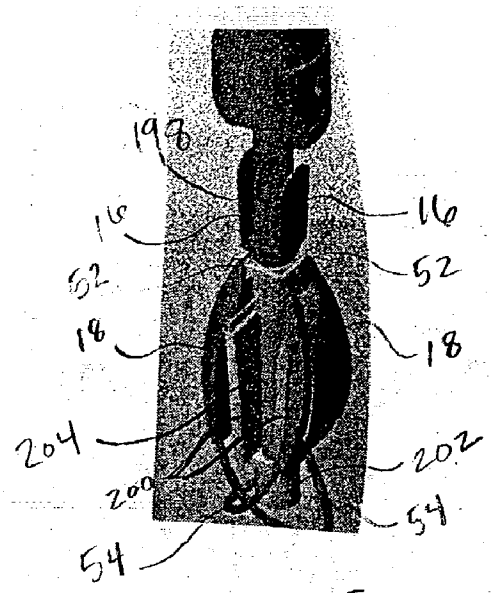
198
16
16
52
52
18
18
204
202
200
54
54

FIG_35

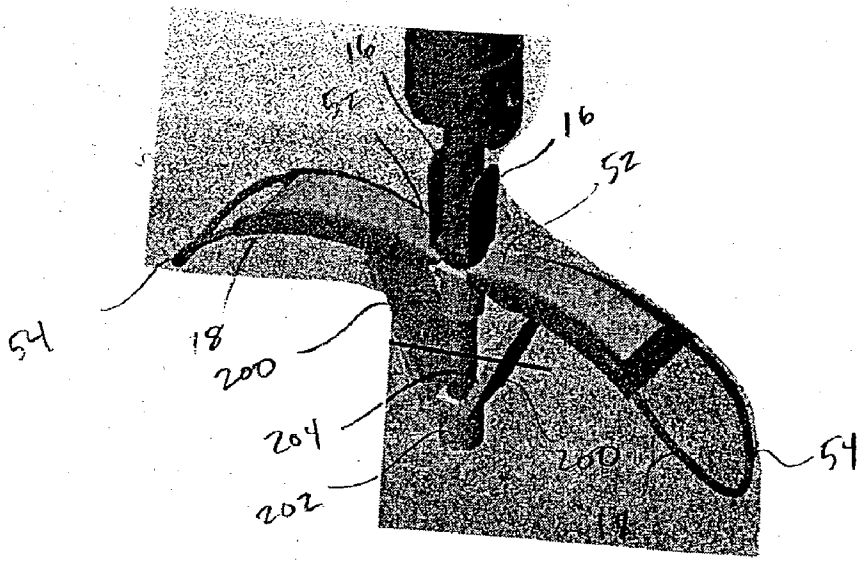
16
52
16
52
54
18
200
204
202
200
54

FIG_36

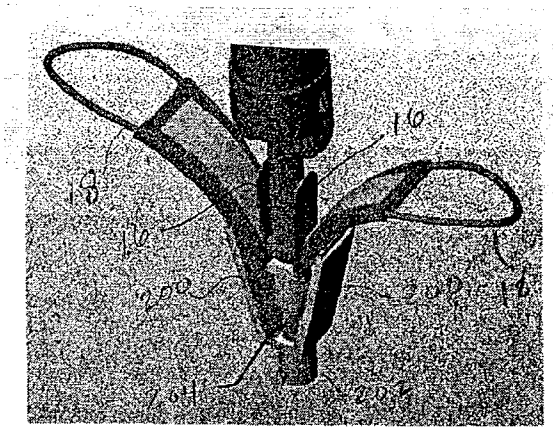

FIG_37

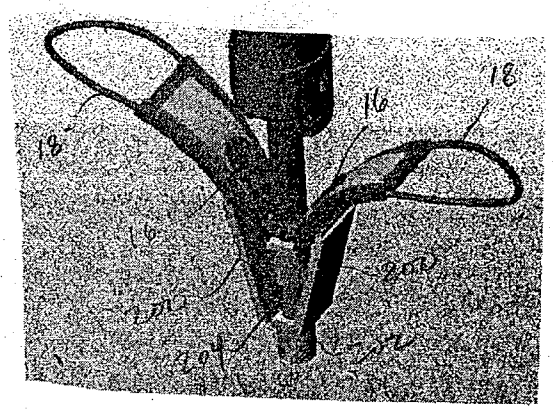

FIG_38

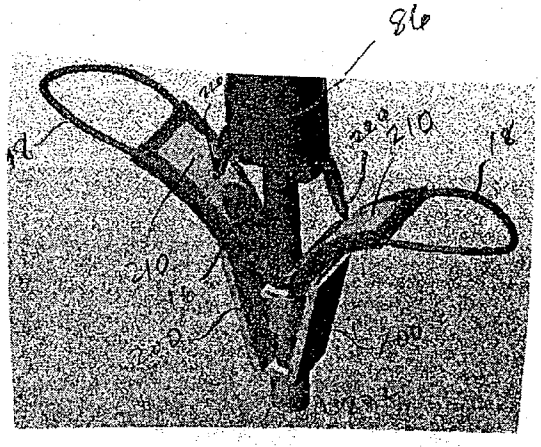

FIG_39

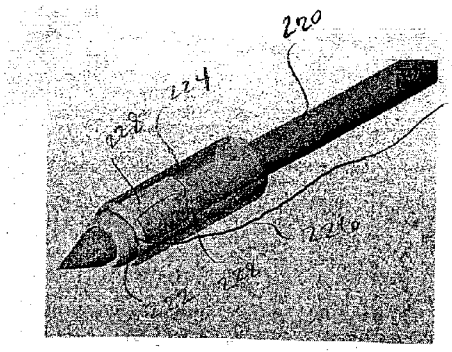

FIG_40A

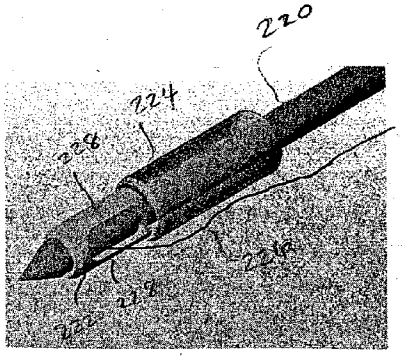

FIG_40B

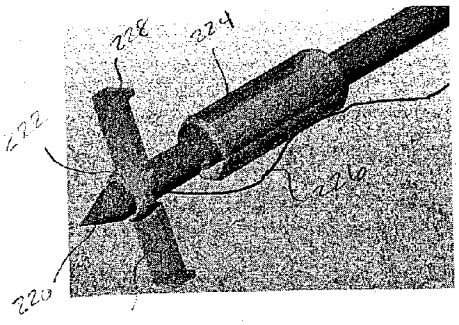

FIG_40C

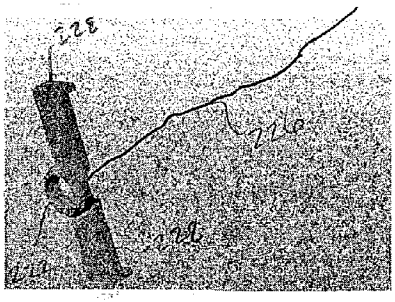

FIG_40D

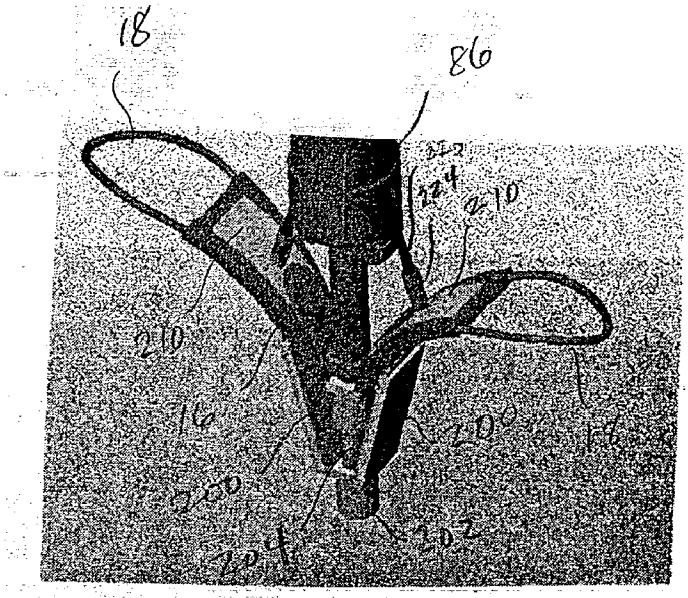
18
86
224
210
210
16
200
16
200
204
202

FIG-41

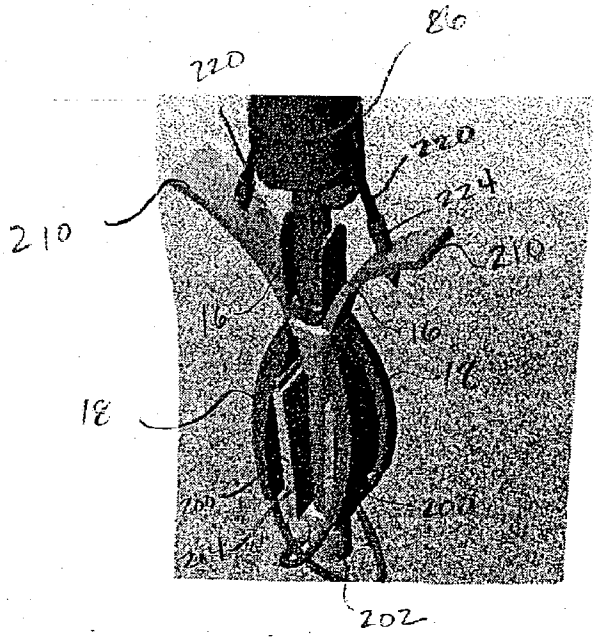
86
220
220
224
210
210
16
16
18
18
200
200
202

FIG-42

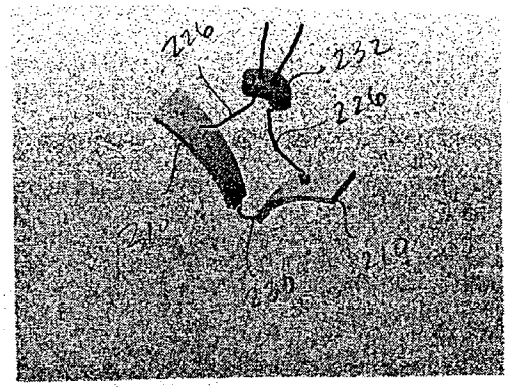

FIG_43A

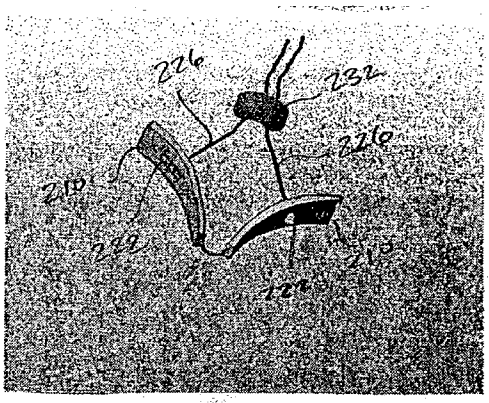

FIG_43B

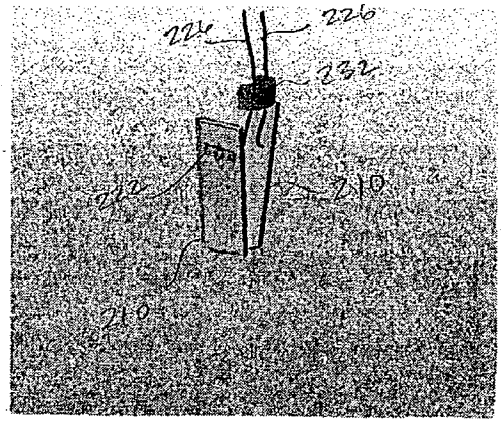

FIG_43C

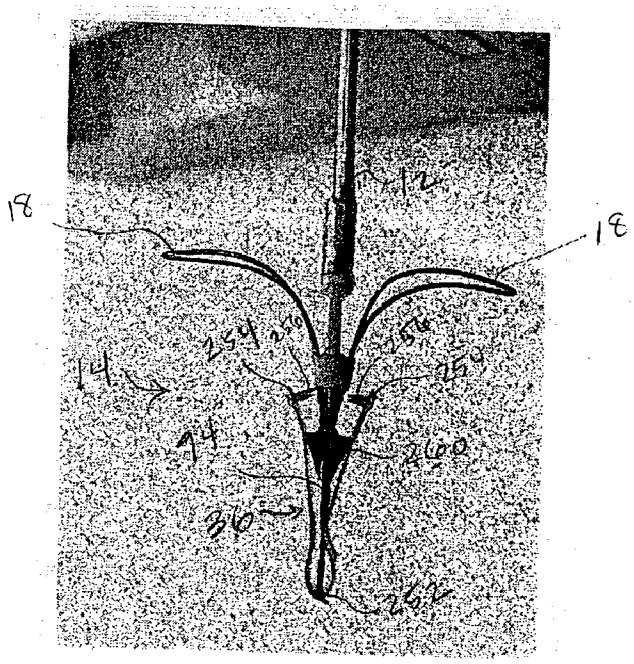

FIG-44A

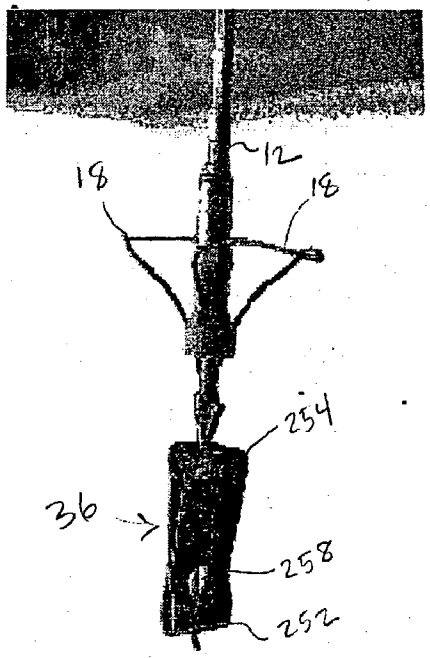

FIG-44B

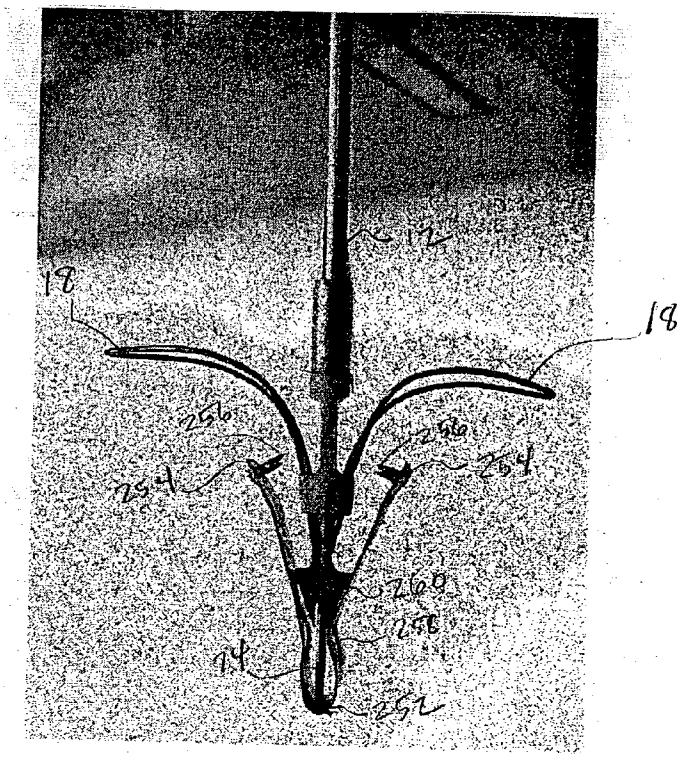
12
18
18
256
256
254
254
260
256
14
252

FIG_45

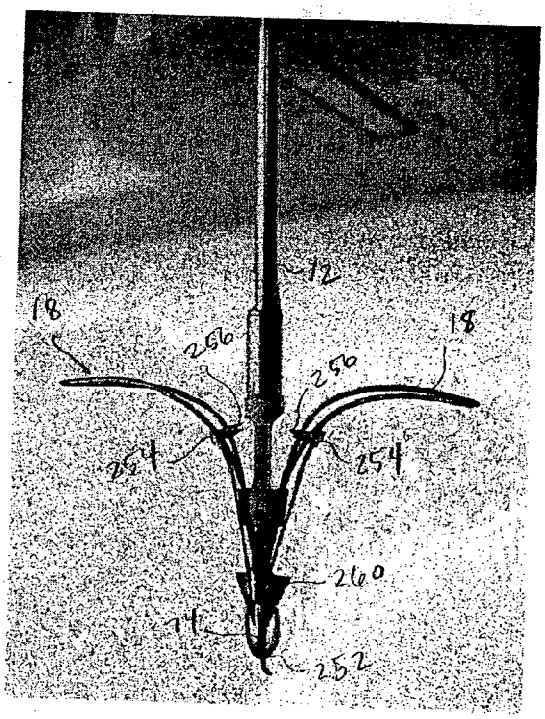
12
18
18
256
256
254
254
260
14
252

FIG_46

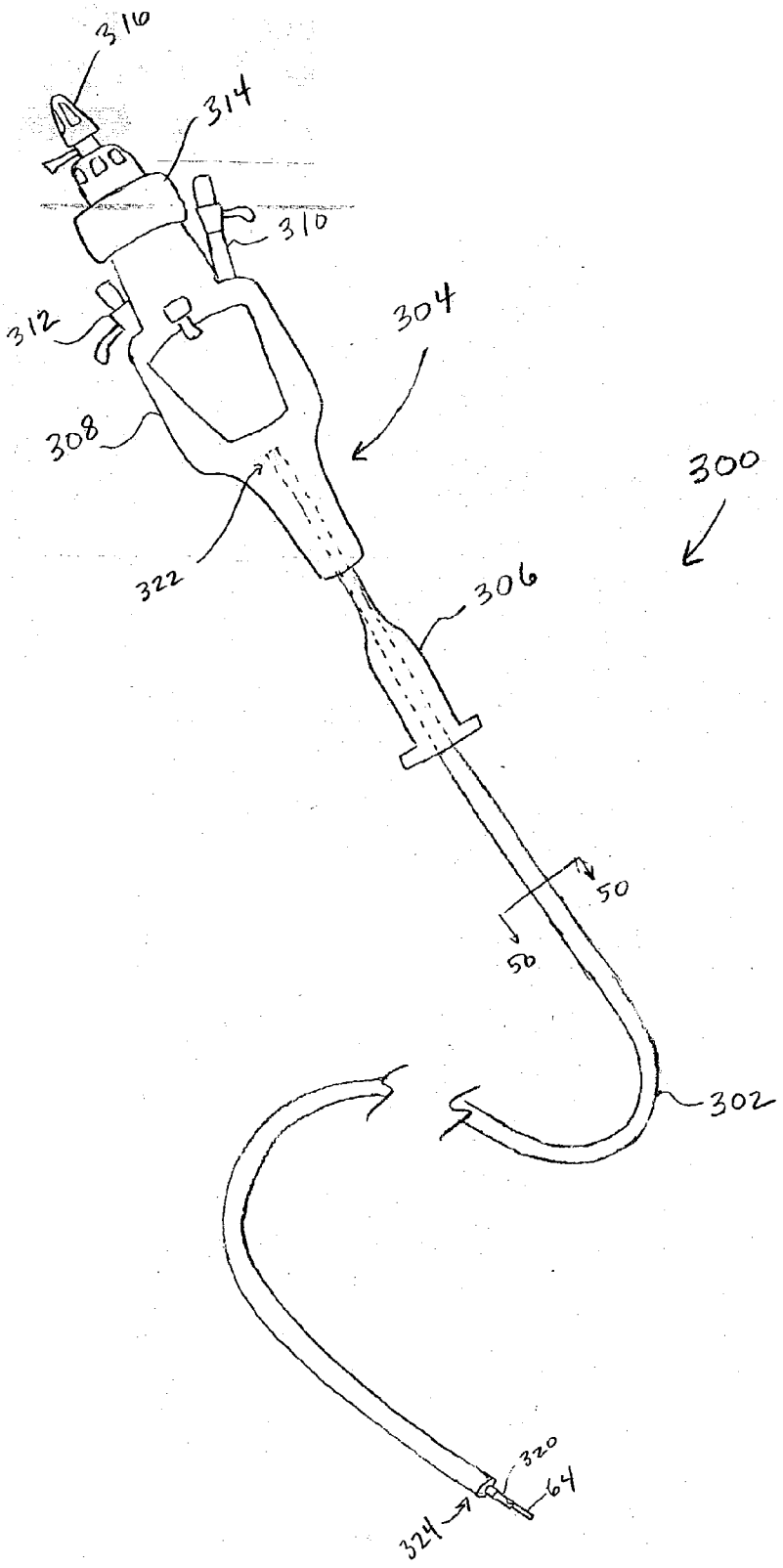

FIG_41

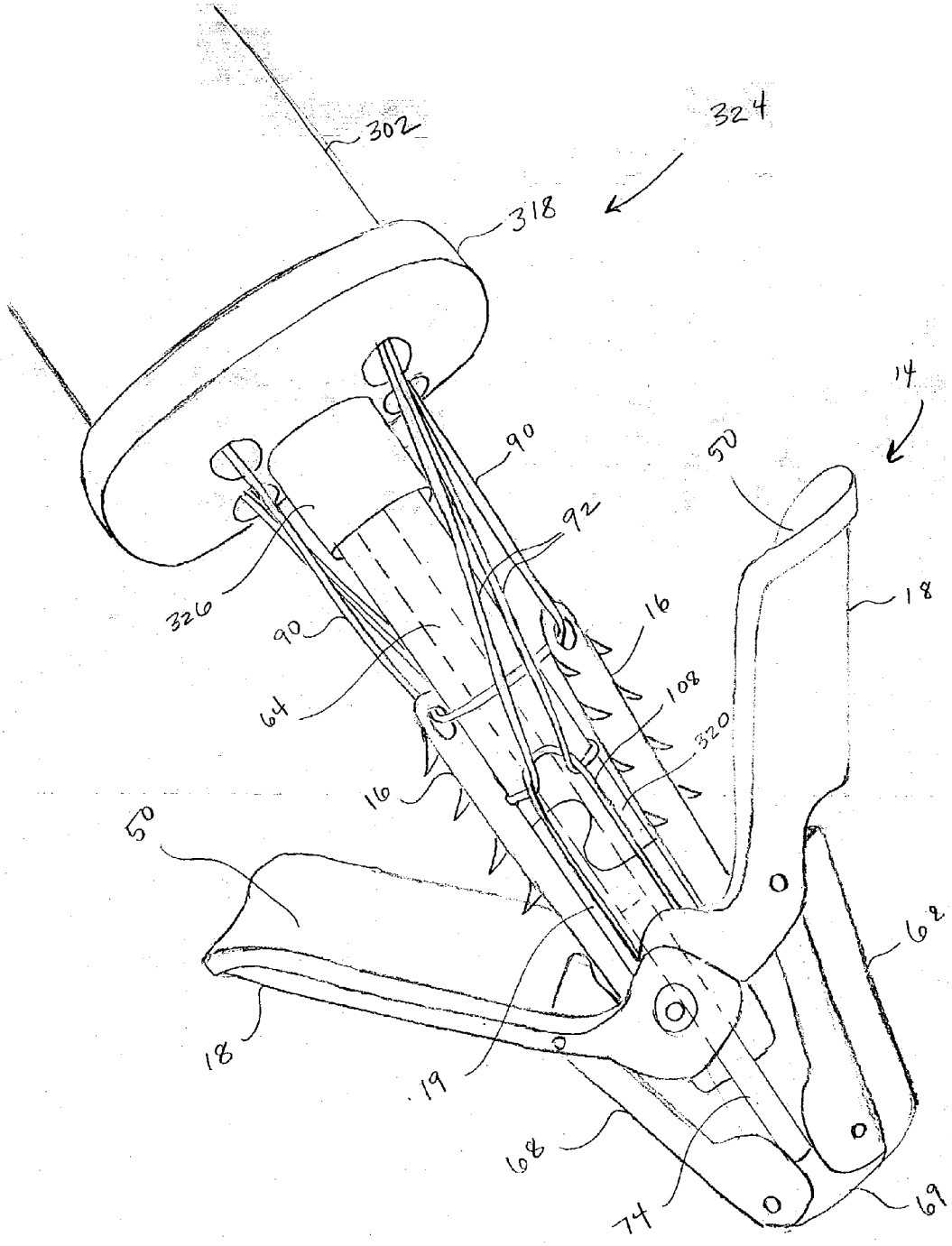
302
324
318
14
90
50
92
18
326
90
16
64
108
320
16
50
62
18
19
68
74
69

FIG-48

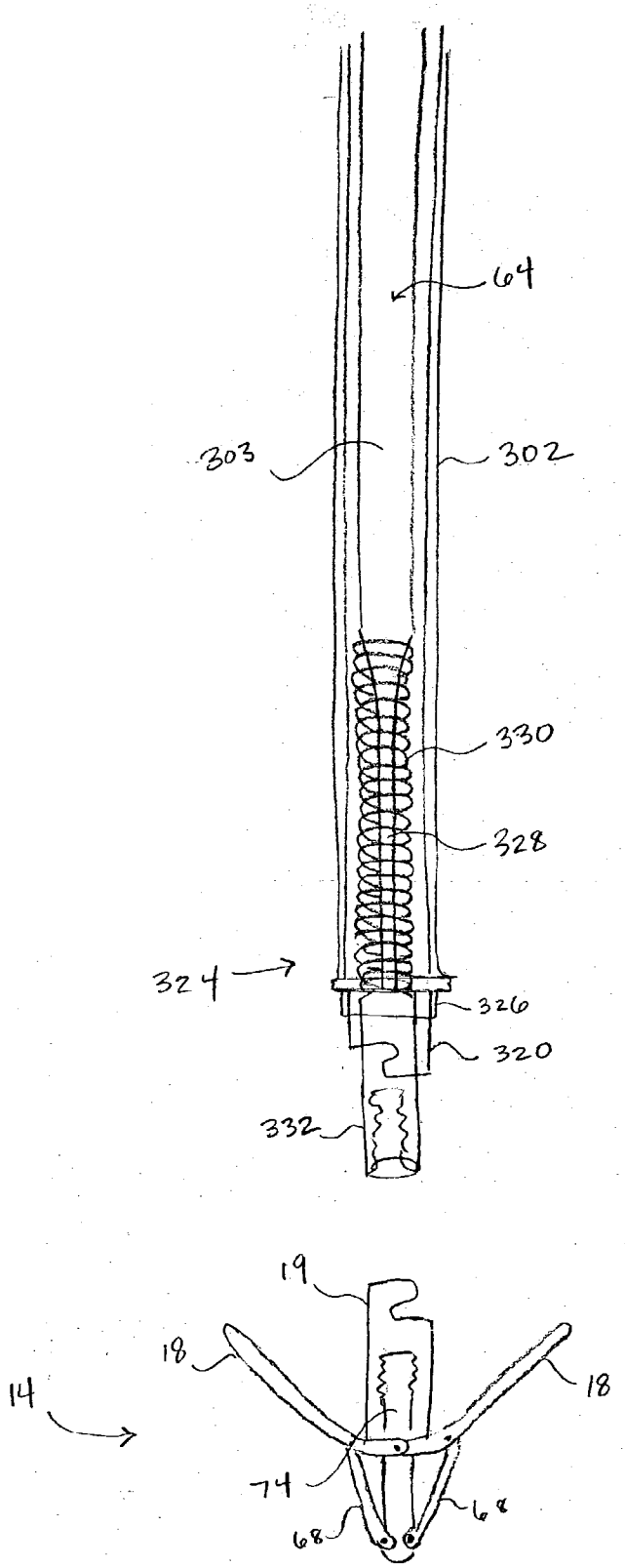

FIG_49

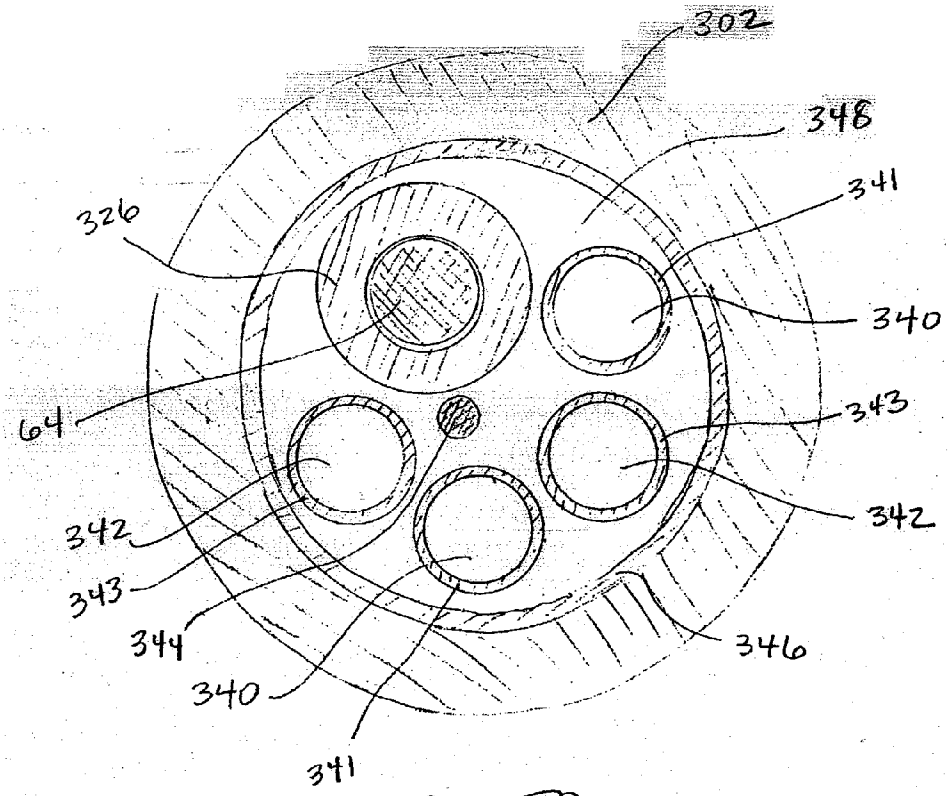

FIG_50

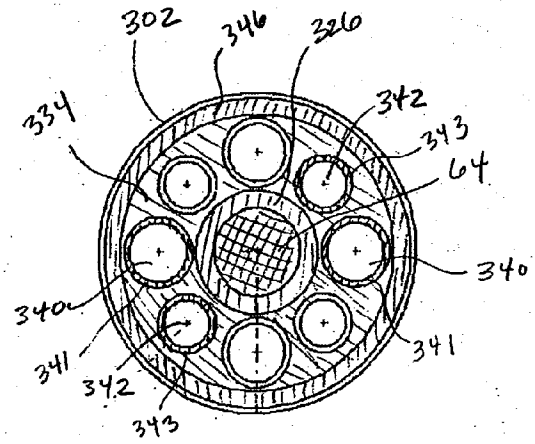

FIG_51

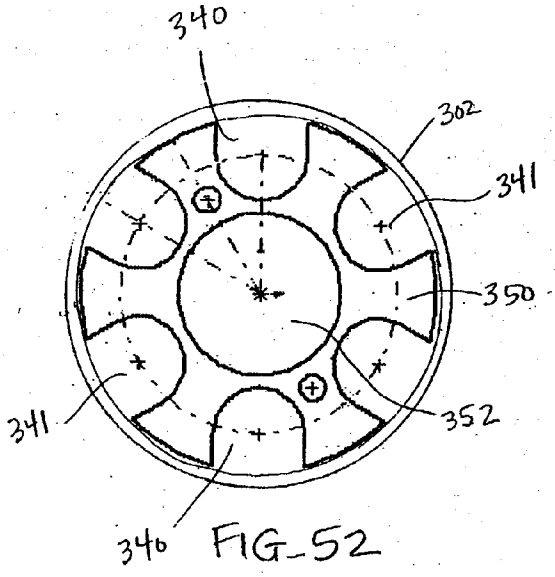

FIG_52

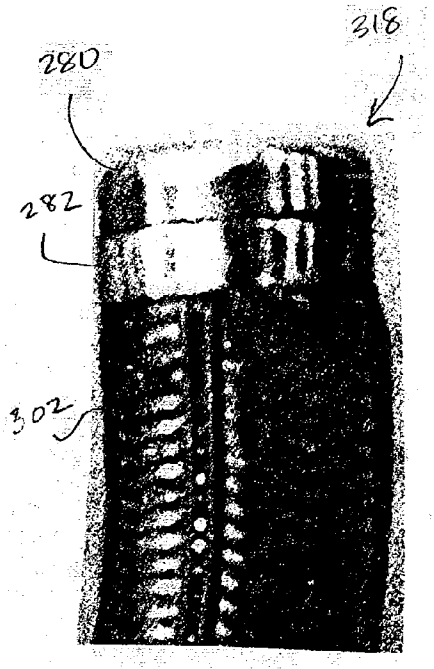

FIG_52A

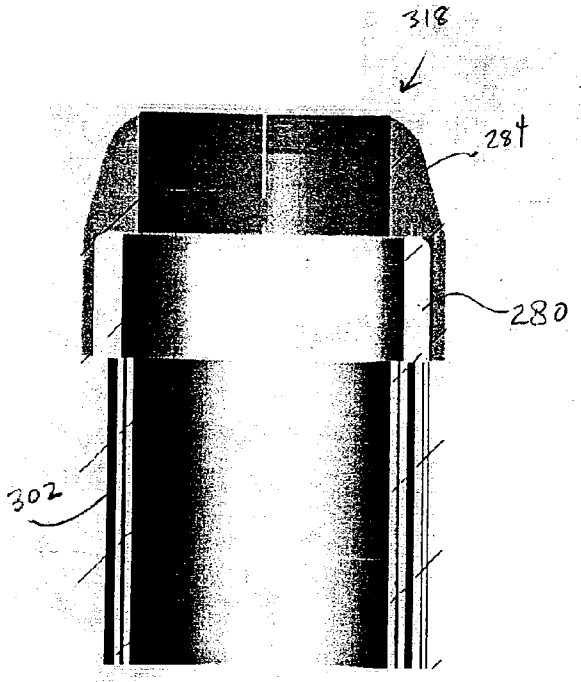

FIG_52B

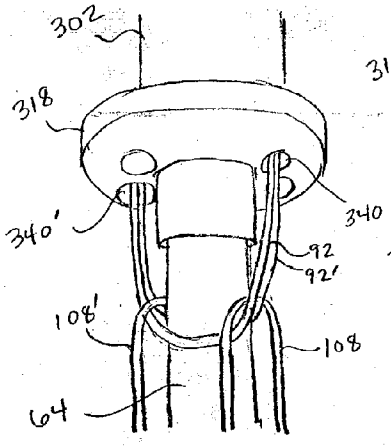

FIG_53A

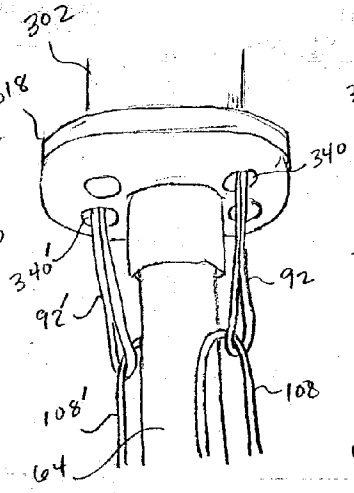

FIG_53B

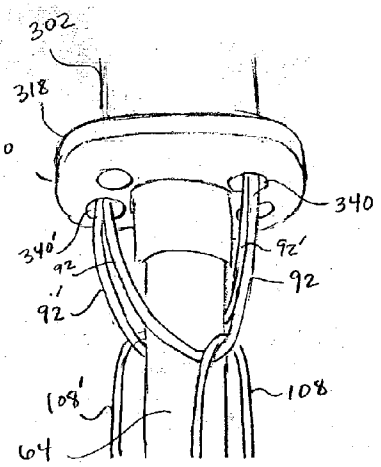

FIG_53C

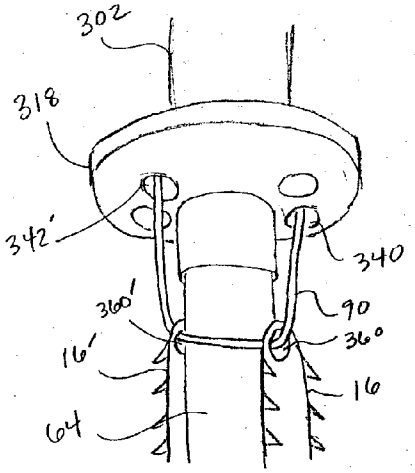

FIG_54A

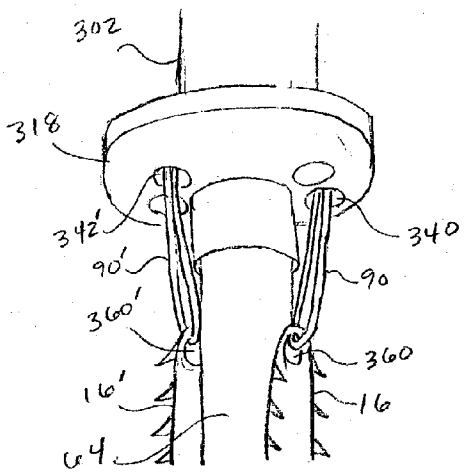

FIG_54B

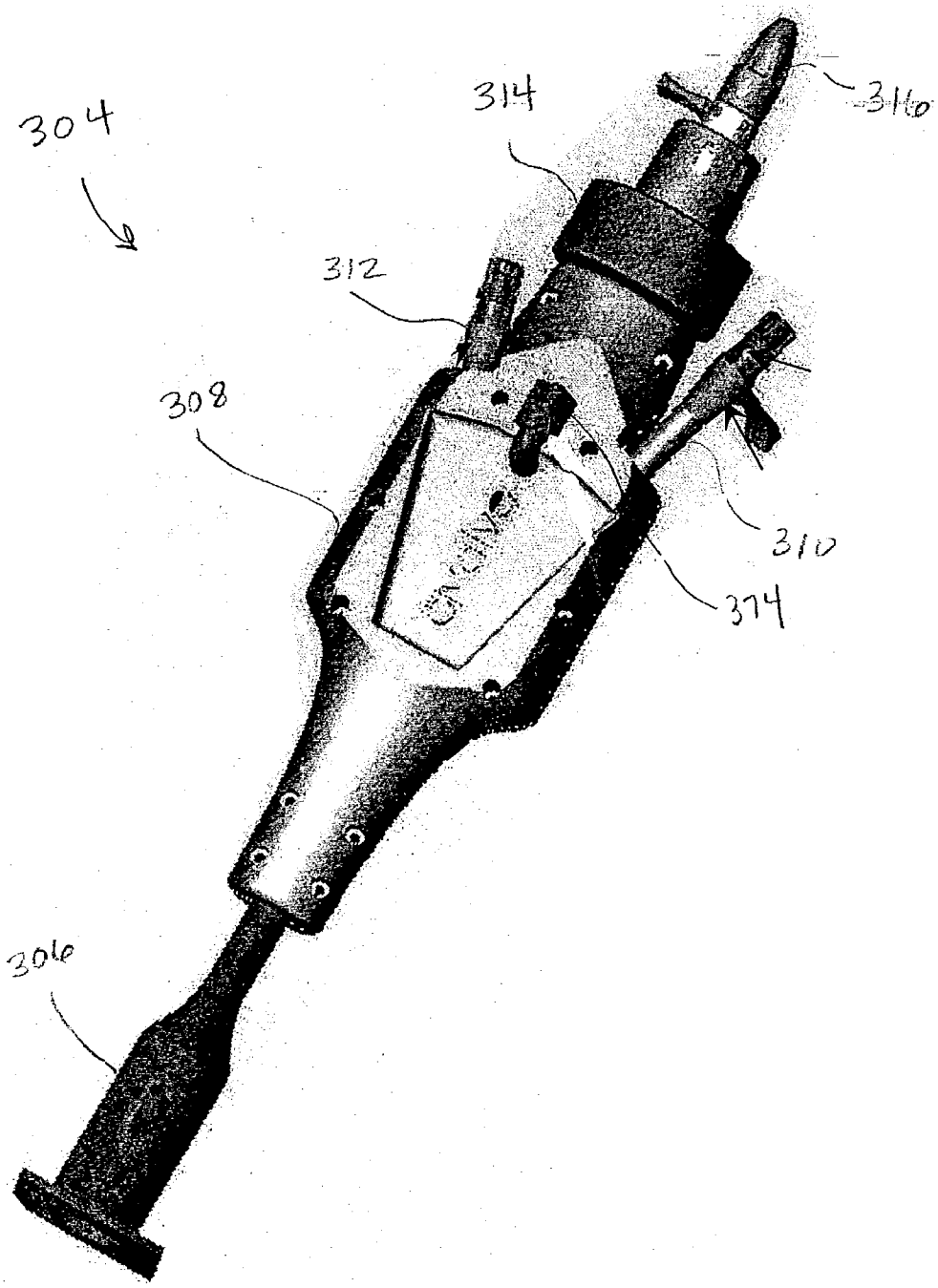

FIG_55

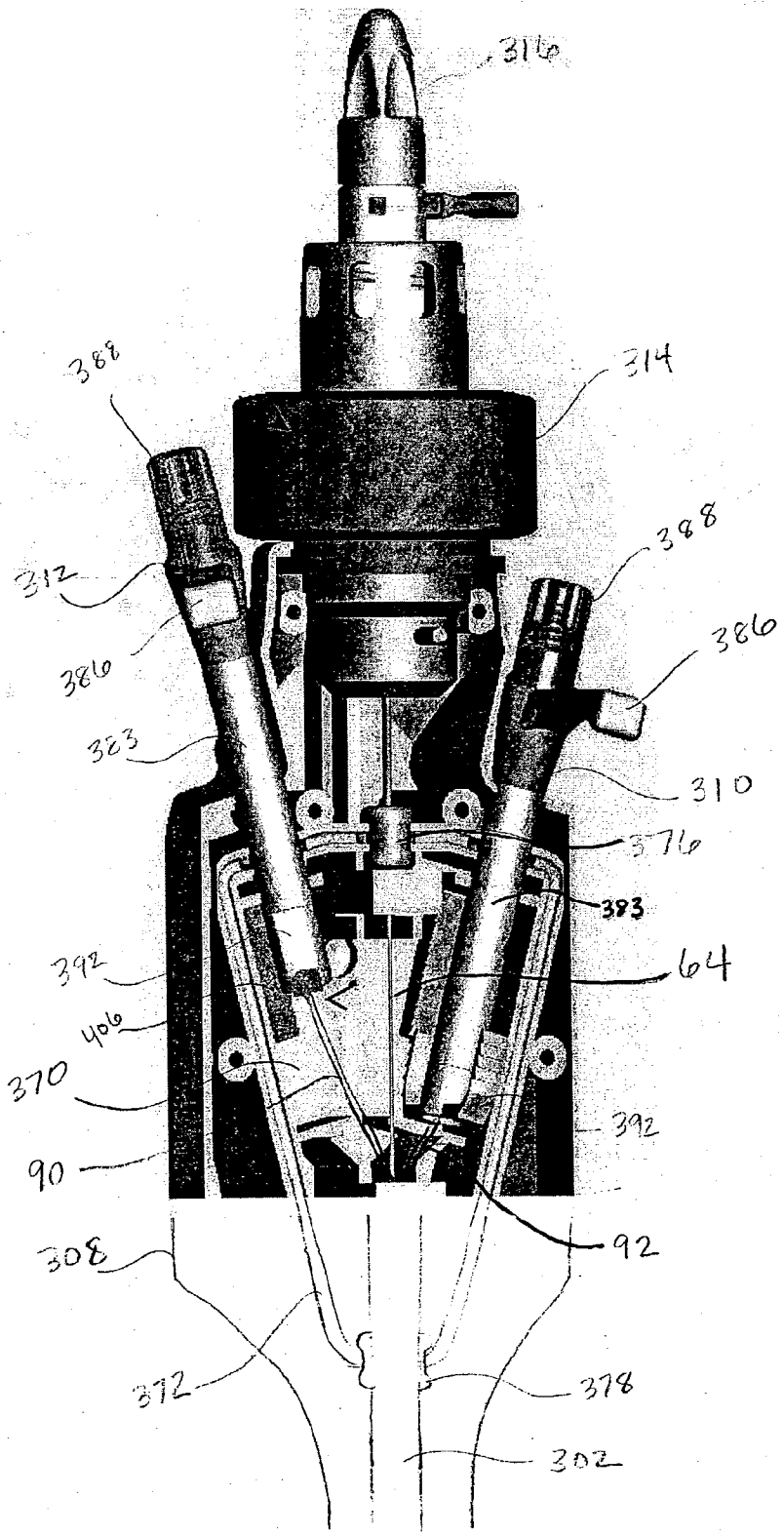
316
314
388
388
312
386
386
323
310
376
393
392
64
406
370
392
90
92
308
372
378
302

FIG_56

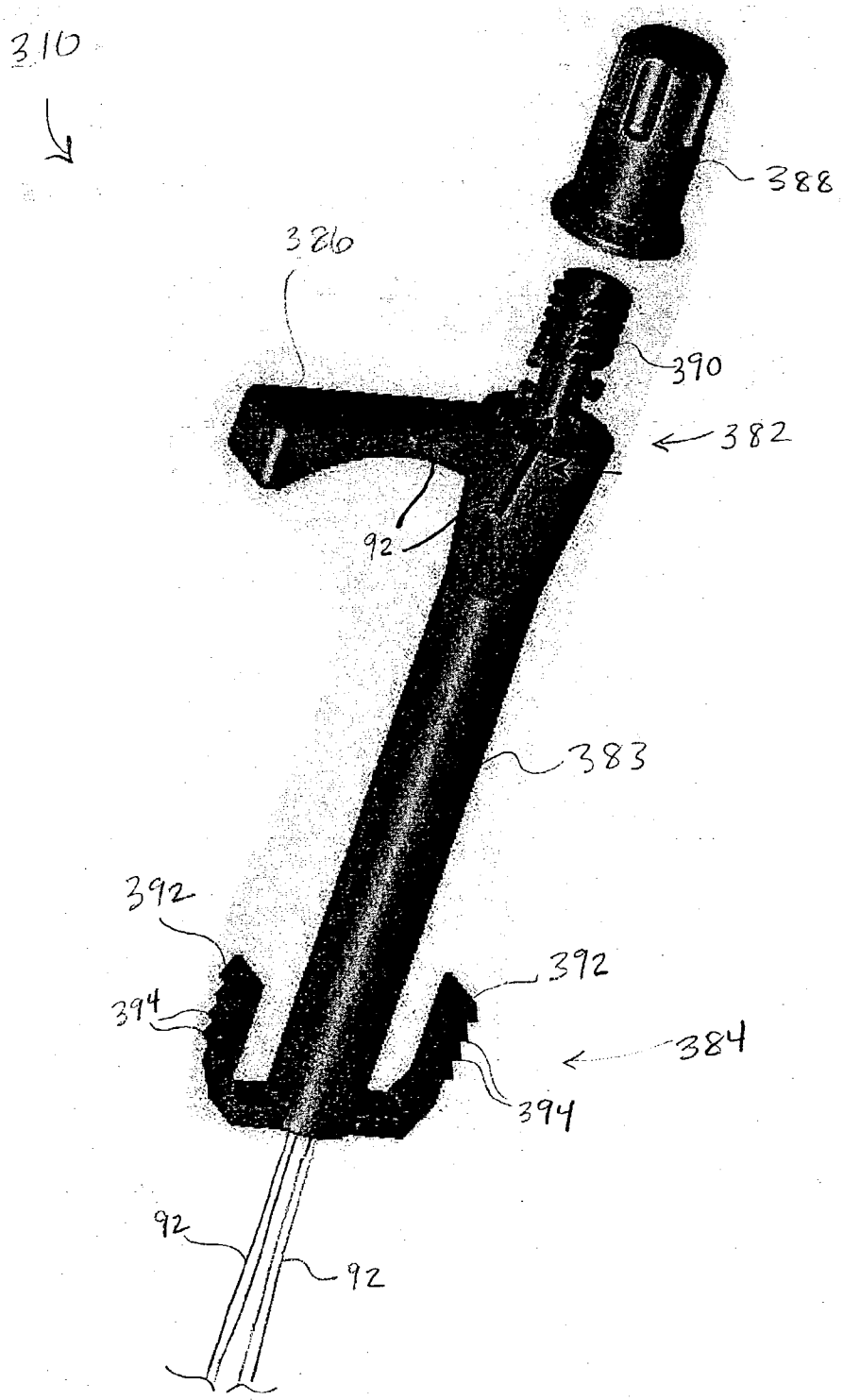

FIG_57

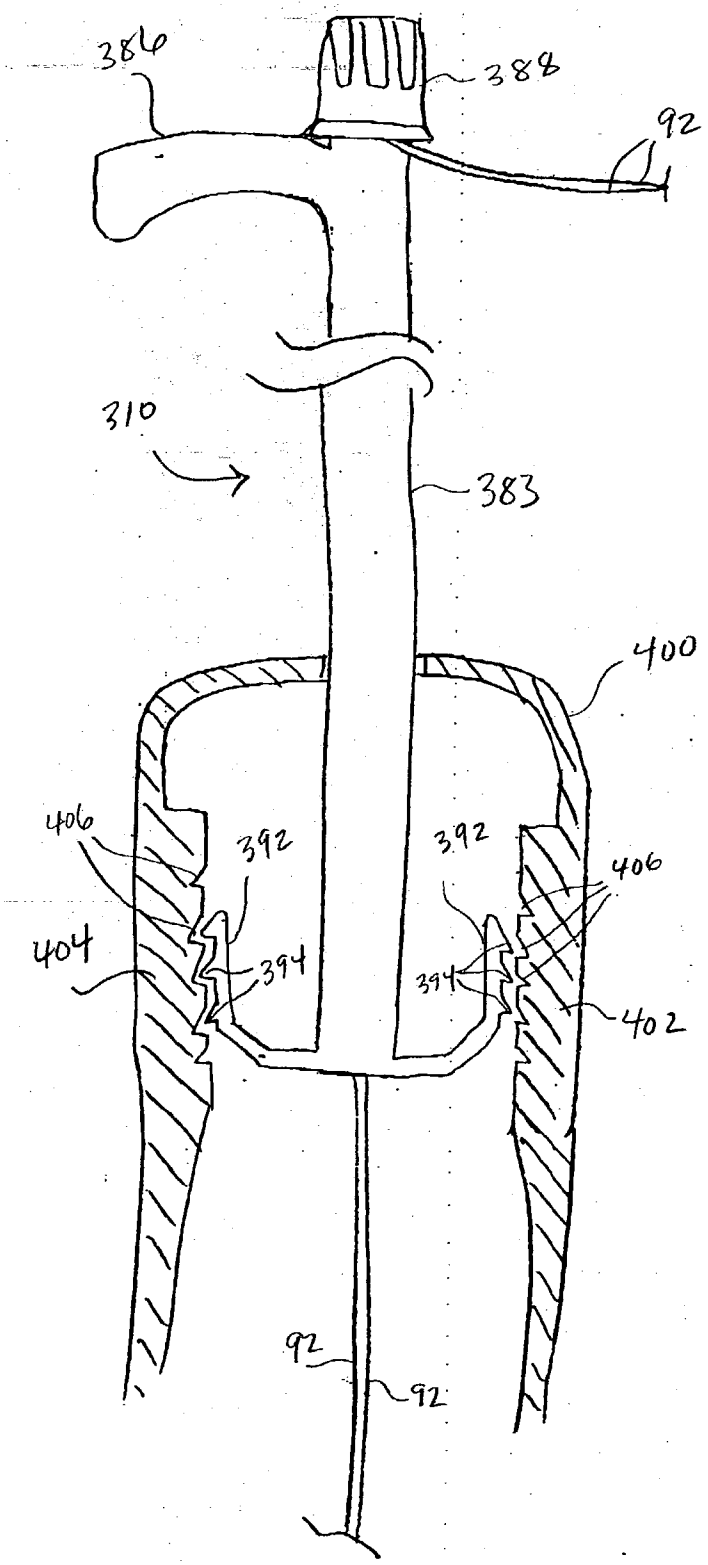

FIG_57A

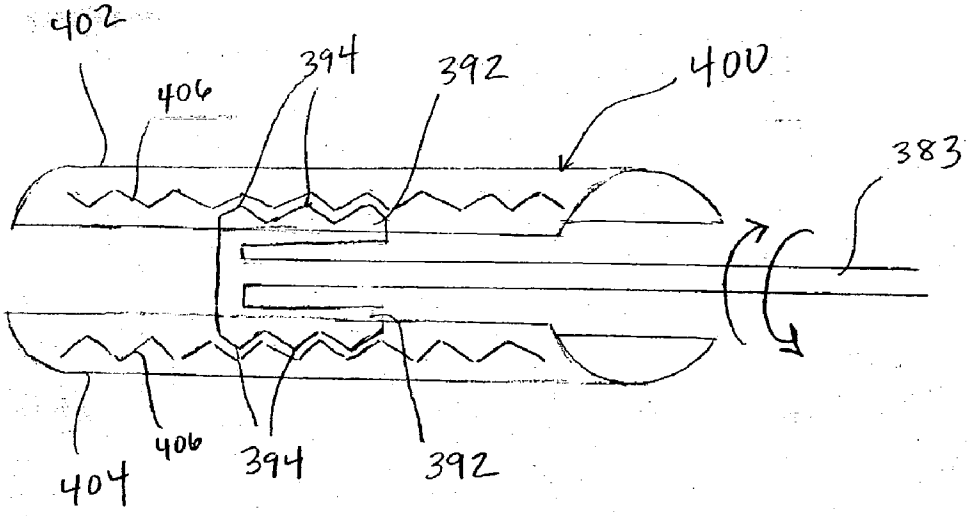

FIG_58A

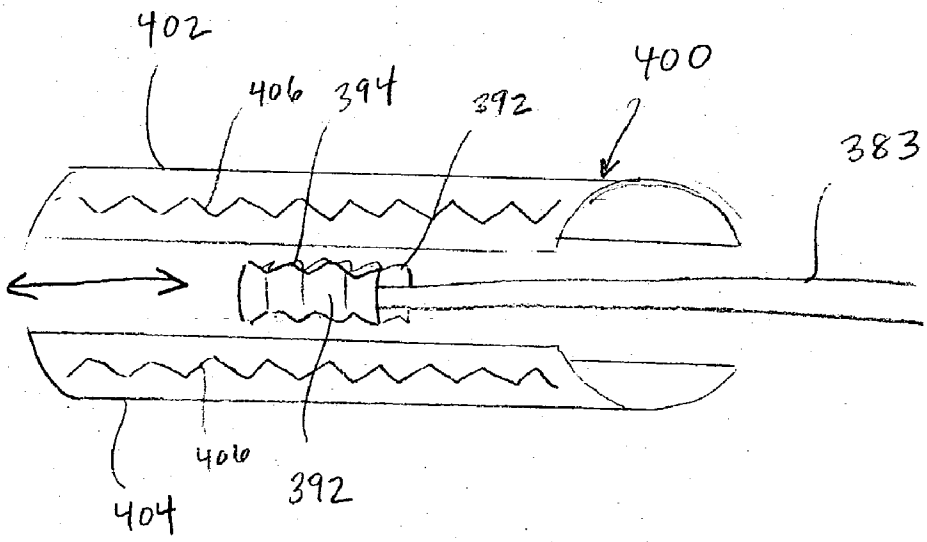

FIG_58B

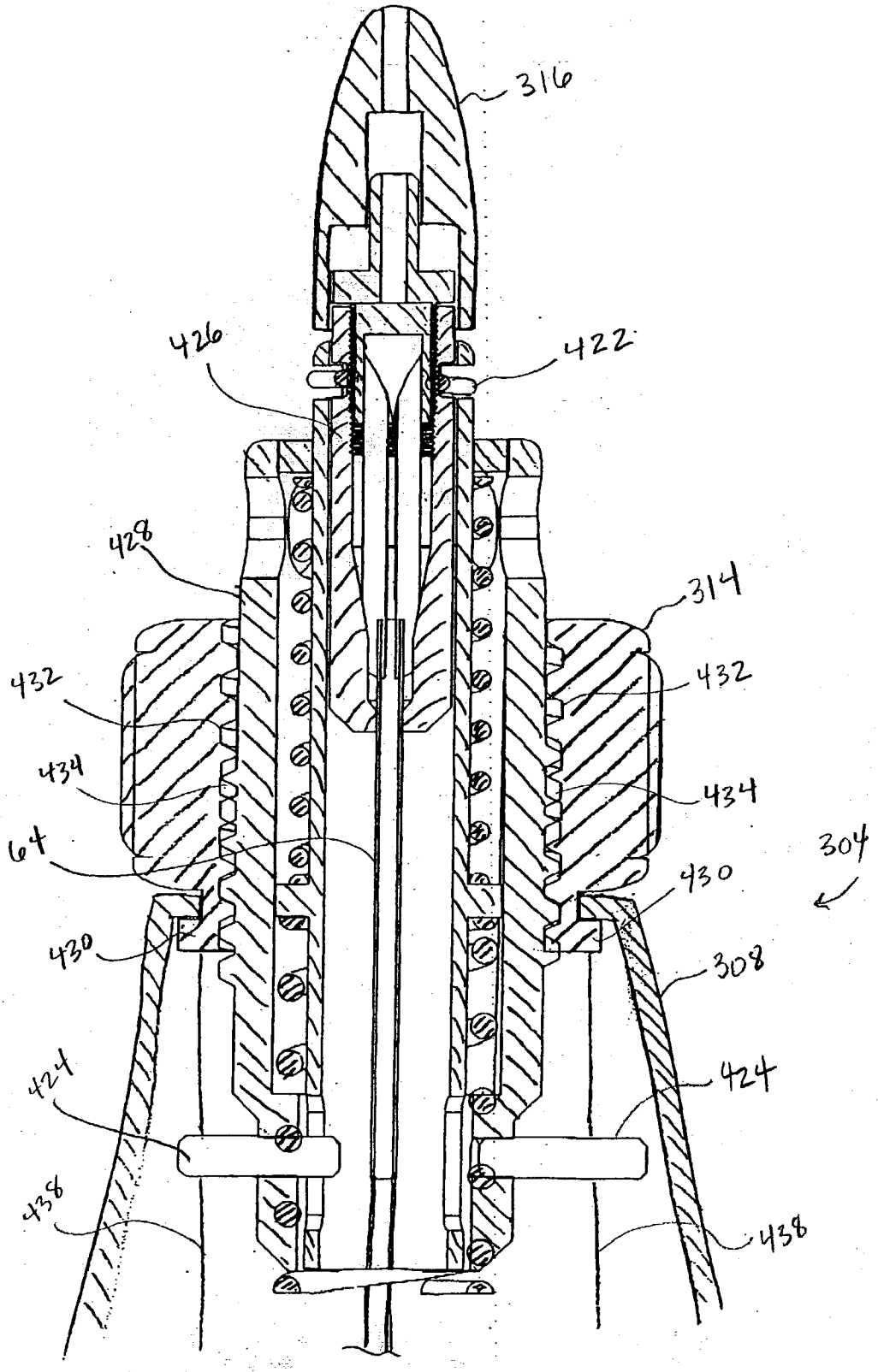
316
426
422
428
314
432
432
434
434
64
304
430
430
308
424
424
438
438

FIG_59

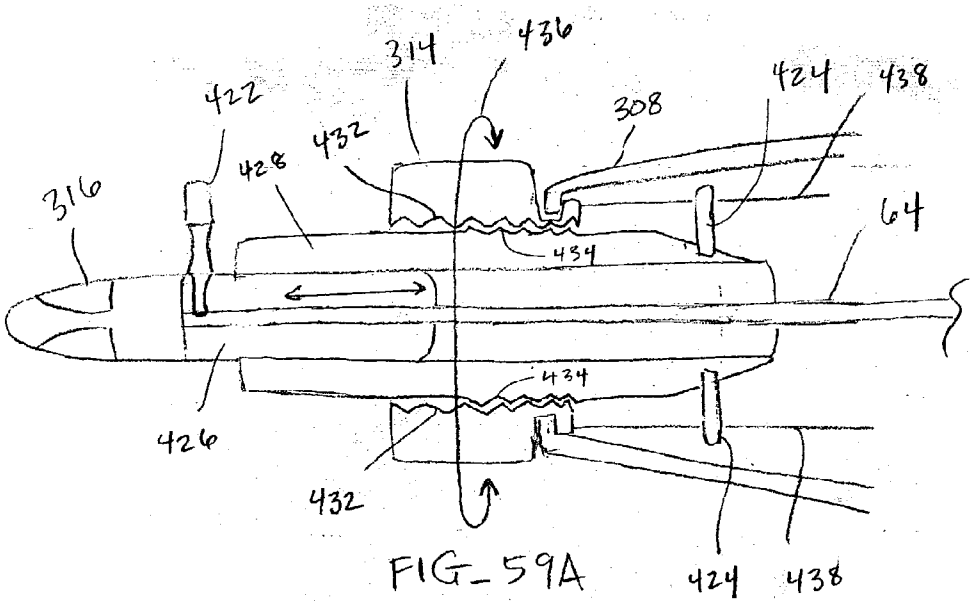

FIG_59A

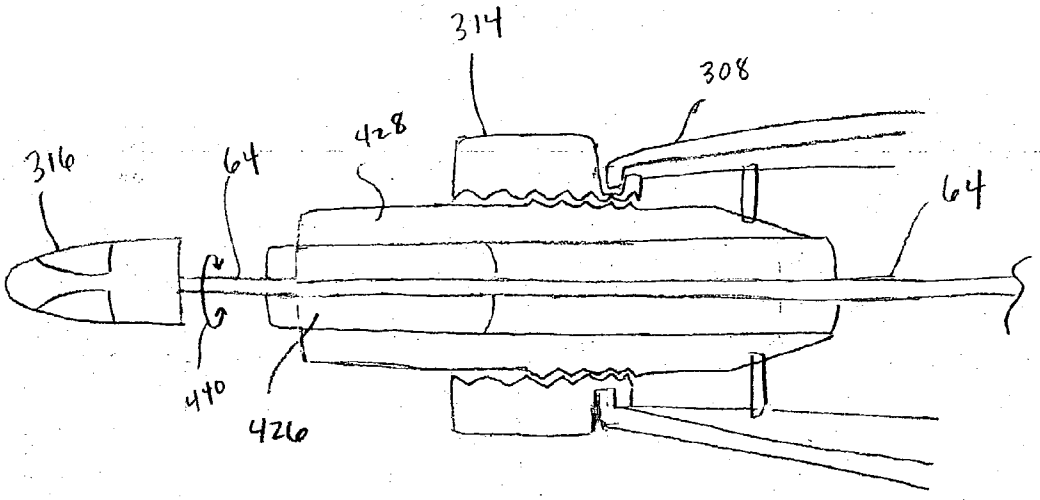

FIG_59B

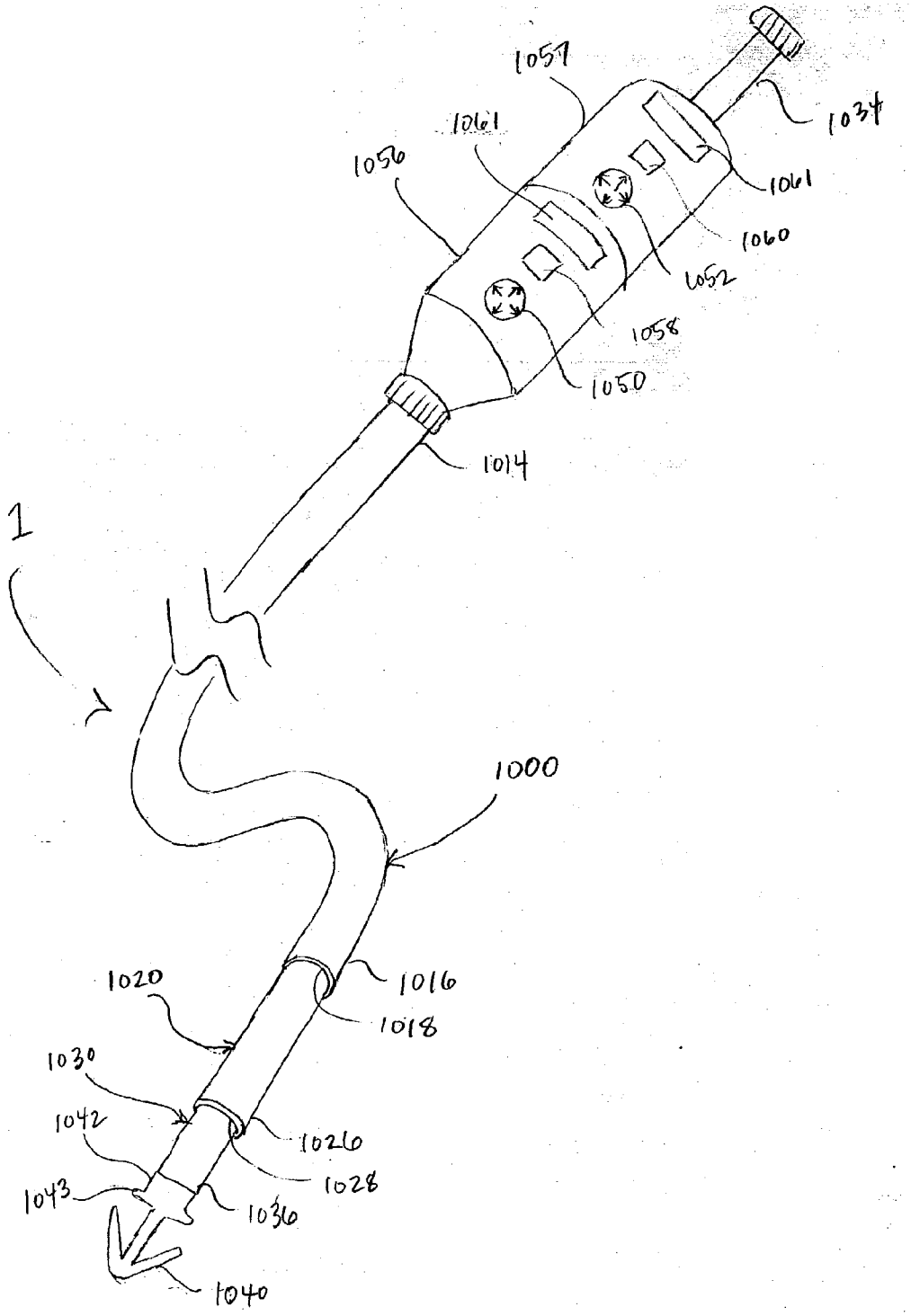
1057
1061
1034
1056
1061
1060
1052
1058
1050
1014
1
1000
1020
1016
1018
1030
1042
1026
1028
1043
1036
1040

FIG_60

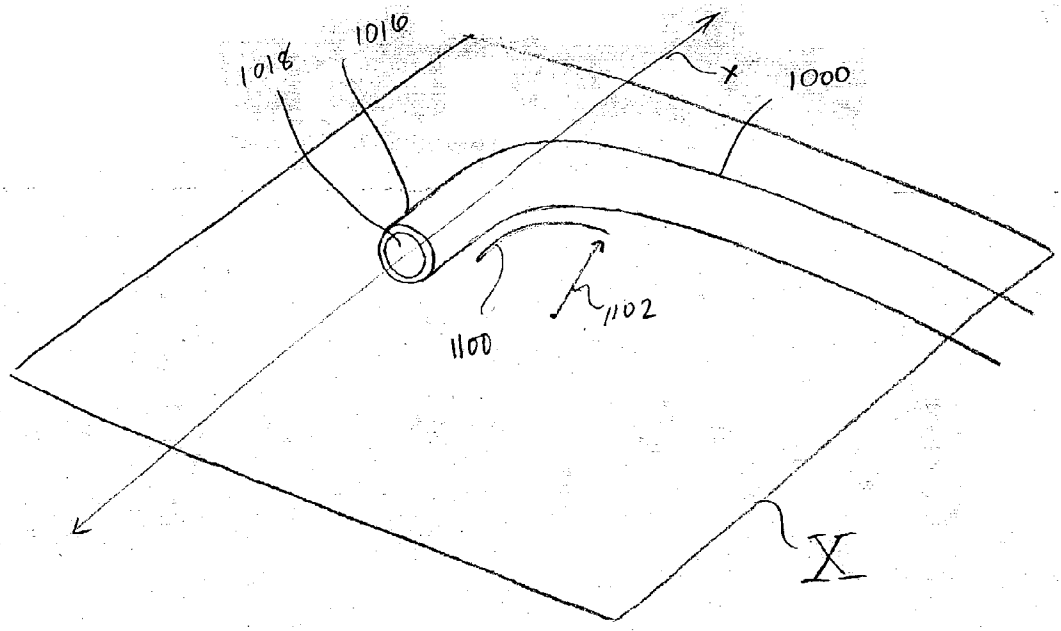

FIG_61A

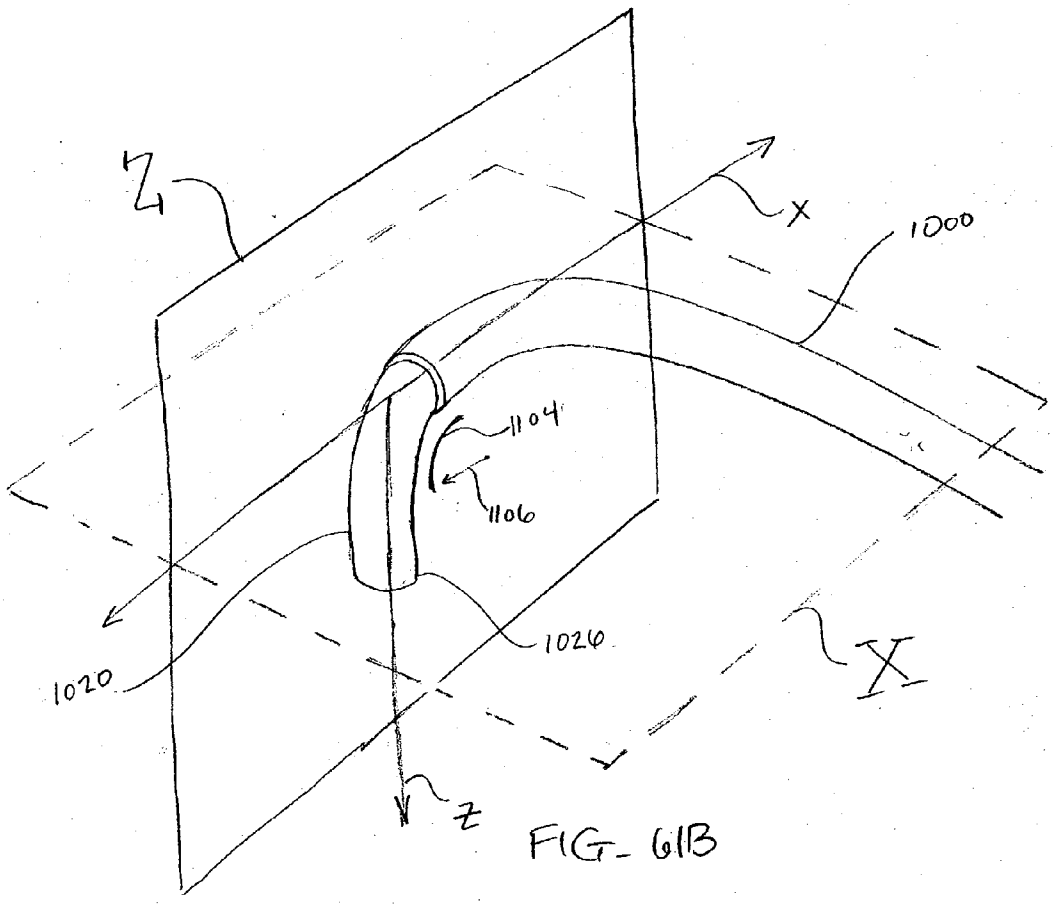

FIG_61B

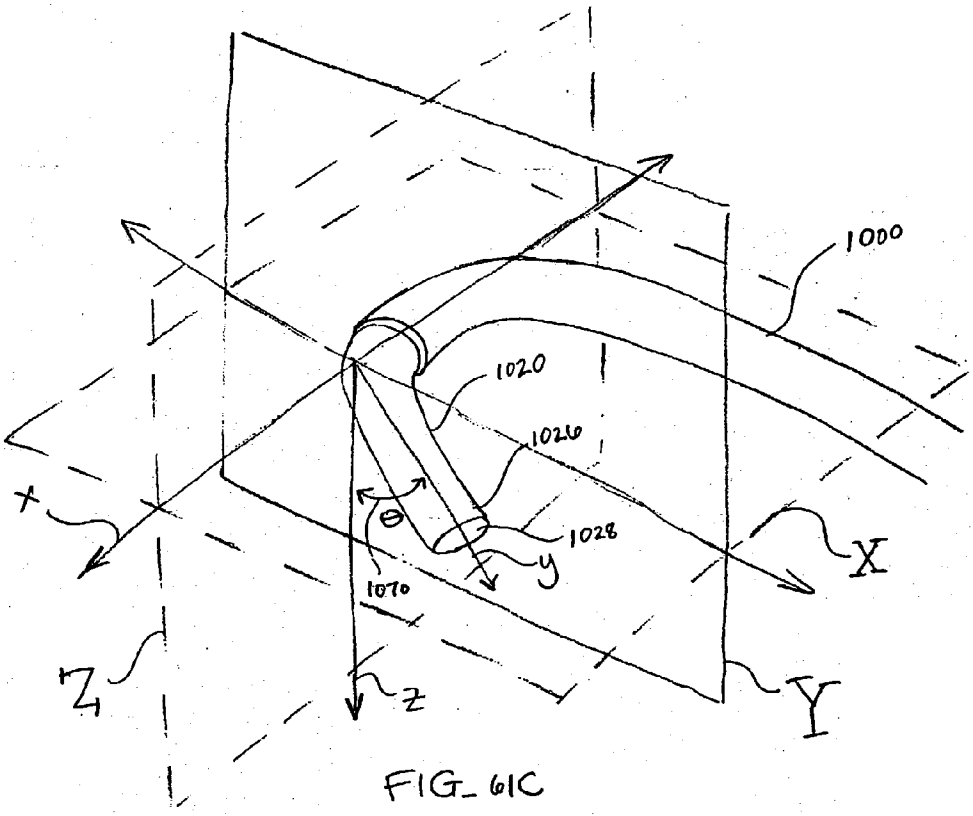

FIG_61C

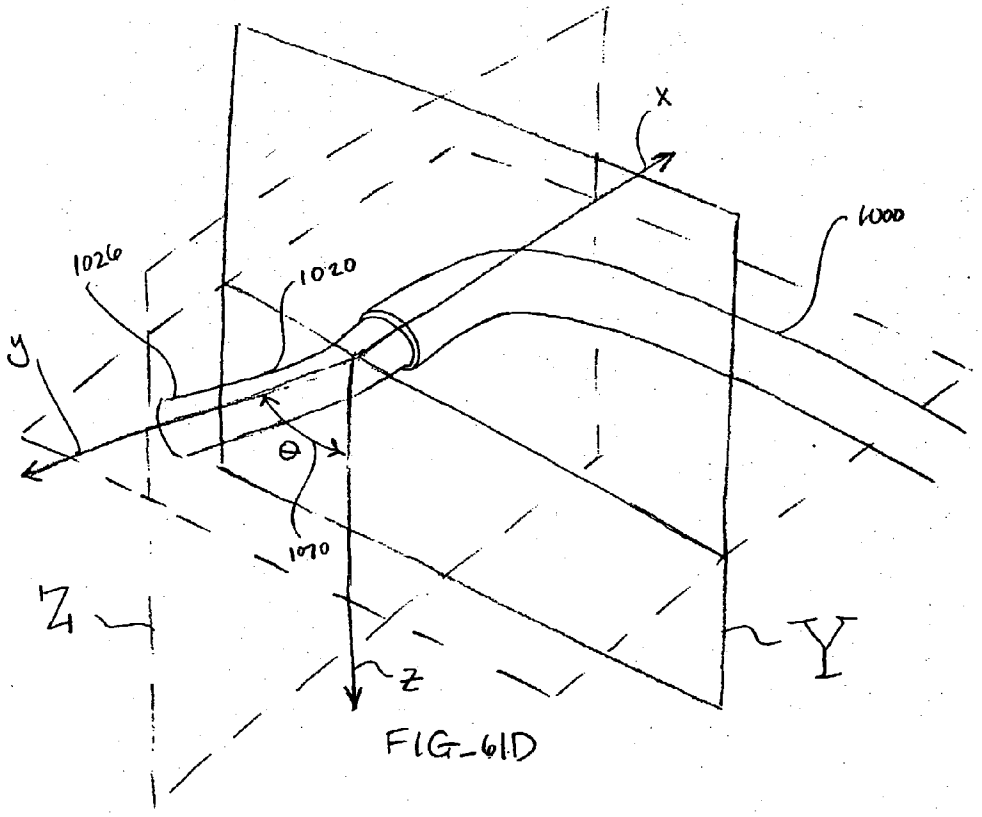

FIG_61D

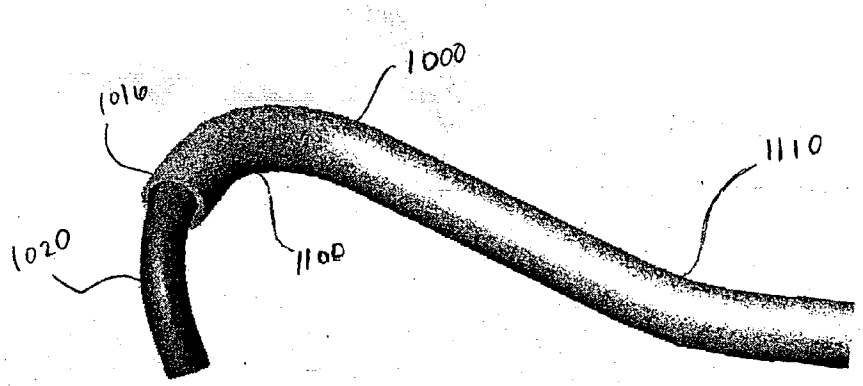

FIG_62A

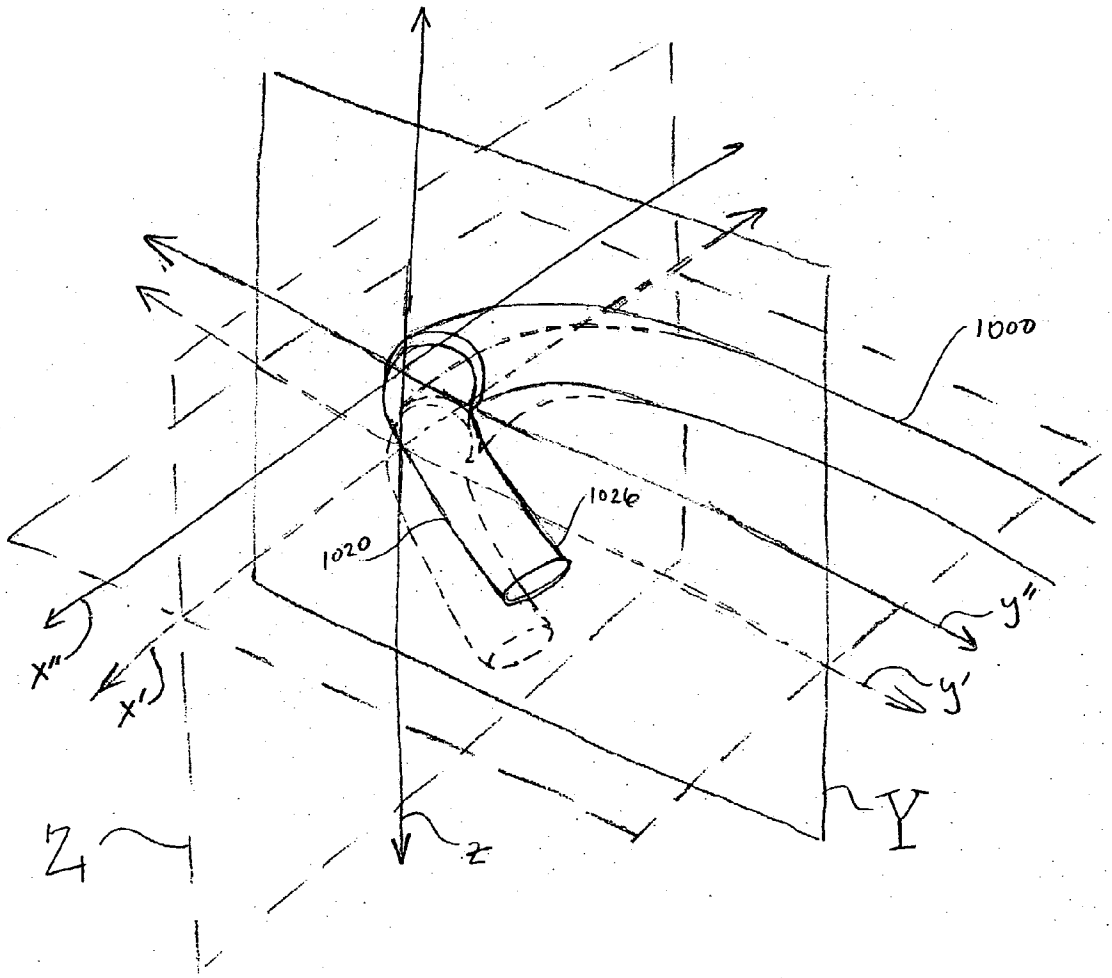

FIG_62B

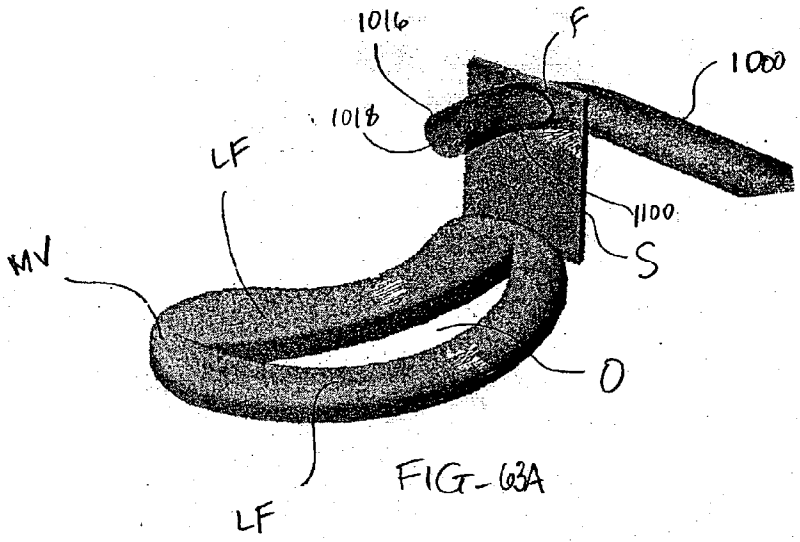

FIG-63A

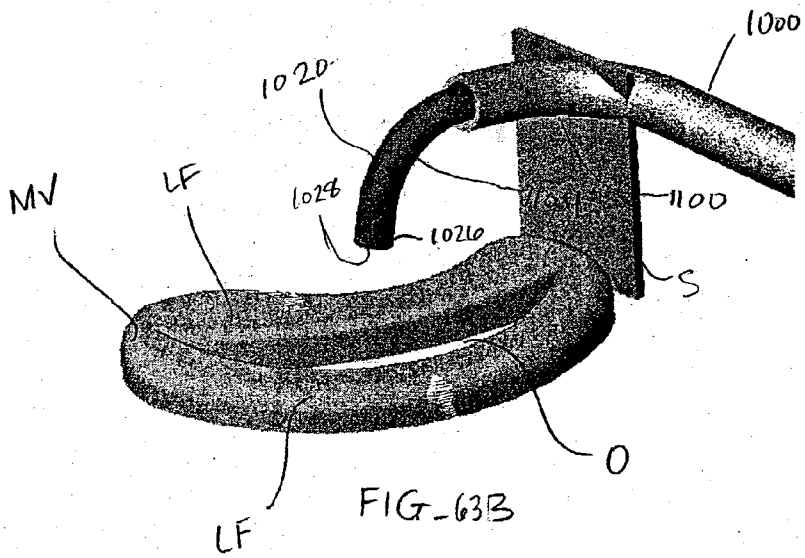

FIG-63B

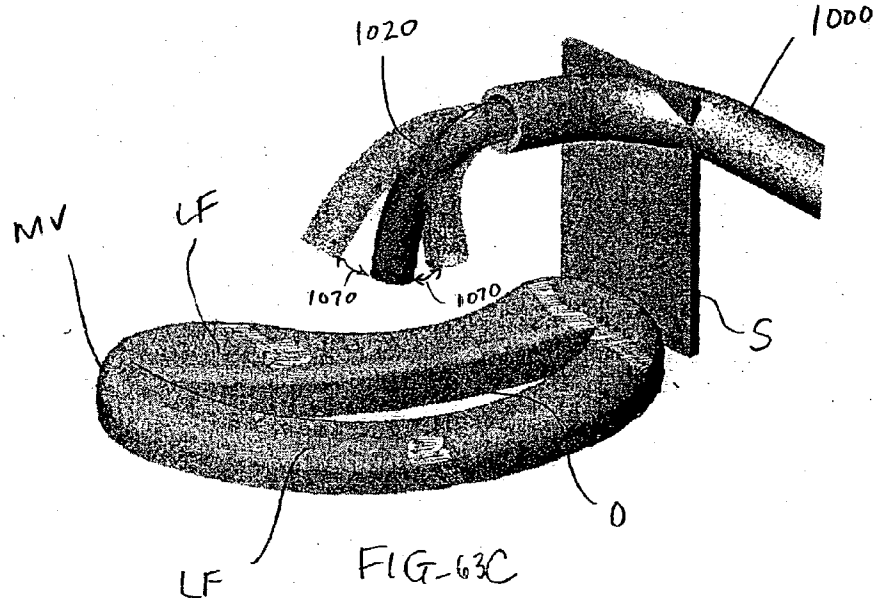

FIG-63C

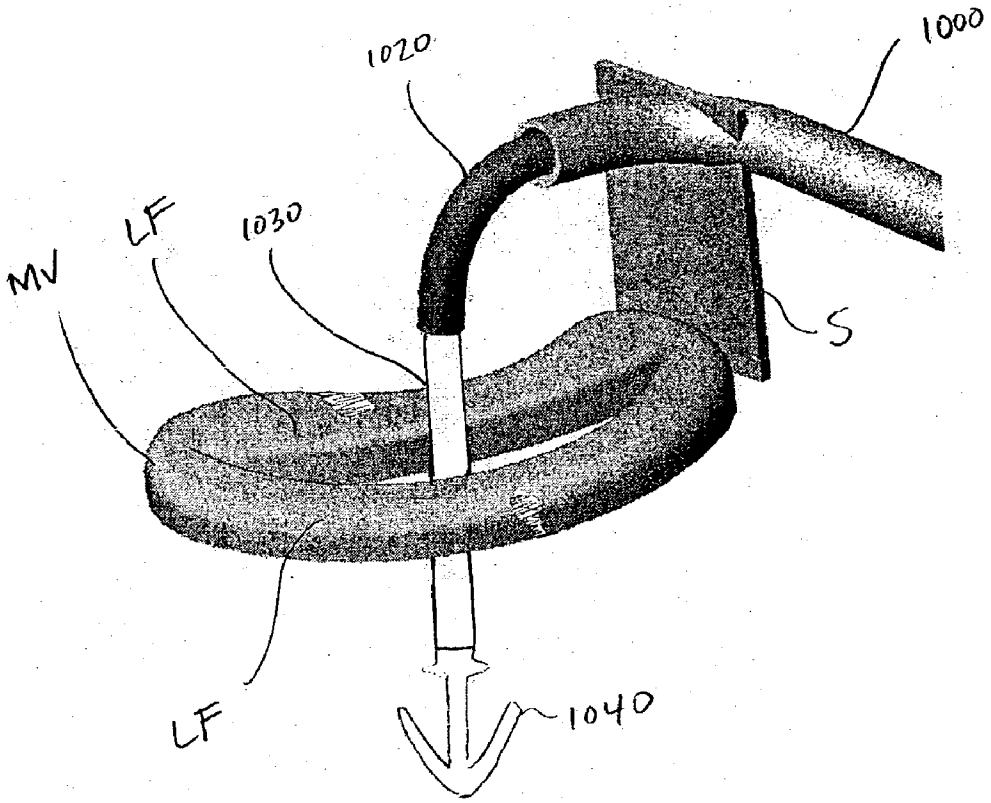

FIG-63D

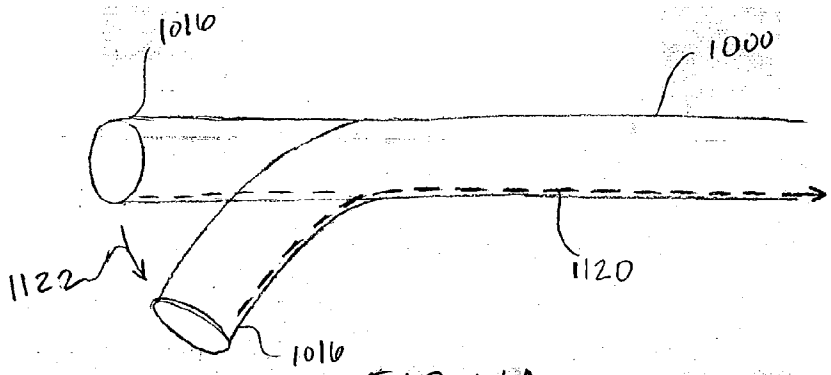

FIG_64A

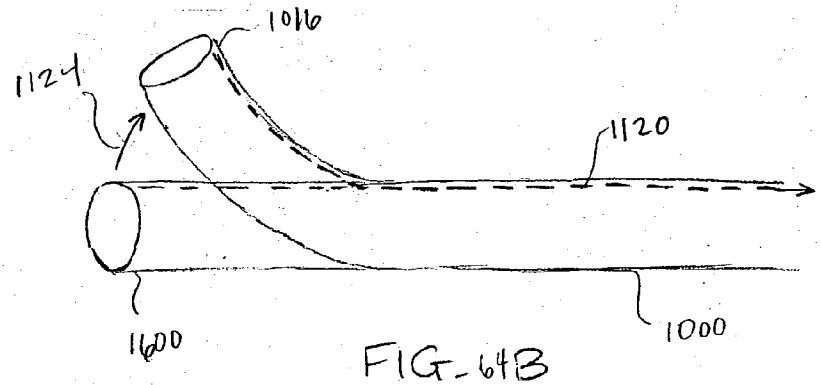

FIG_64B

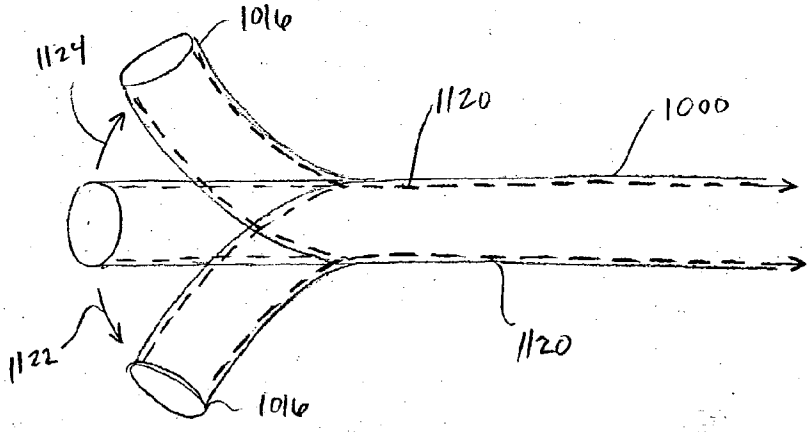

FIG_64C

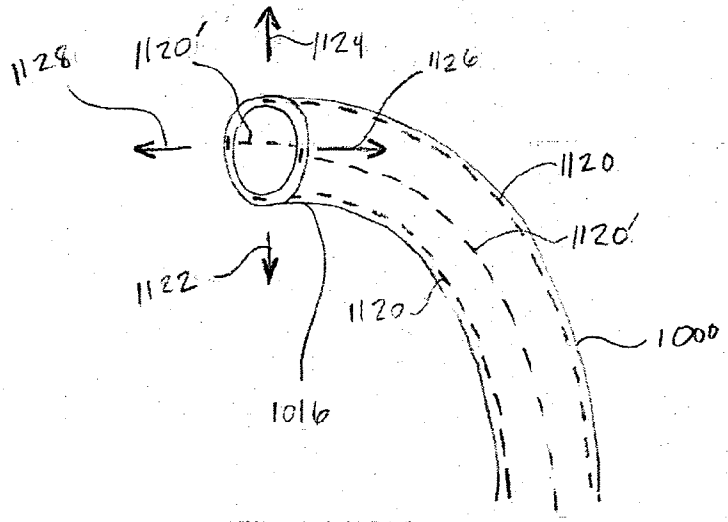

FIG_64D

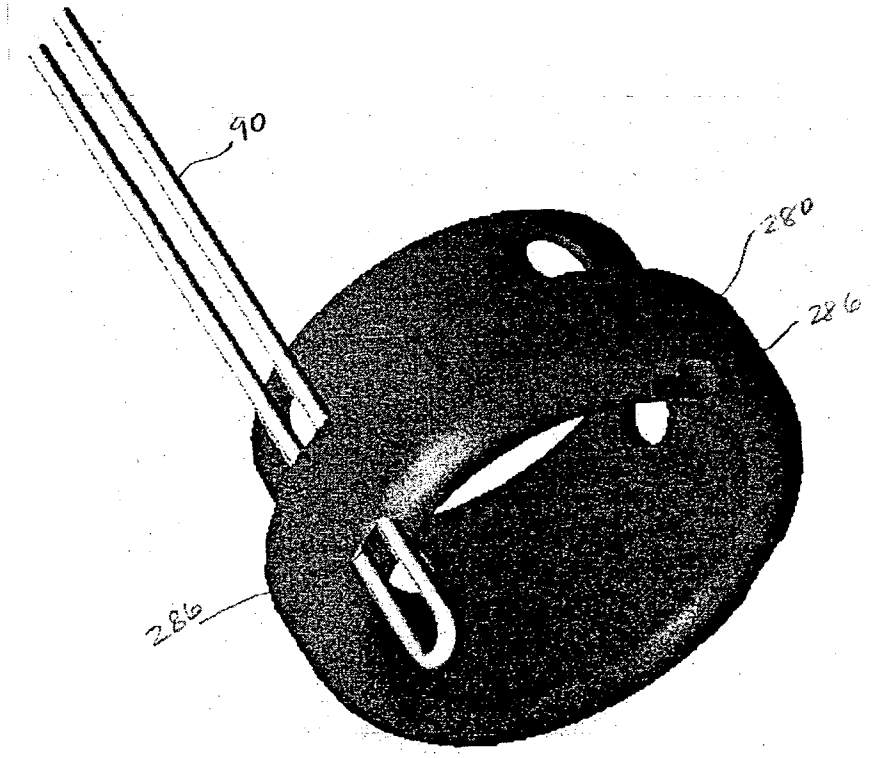

FIG_64E

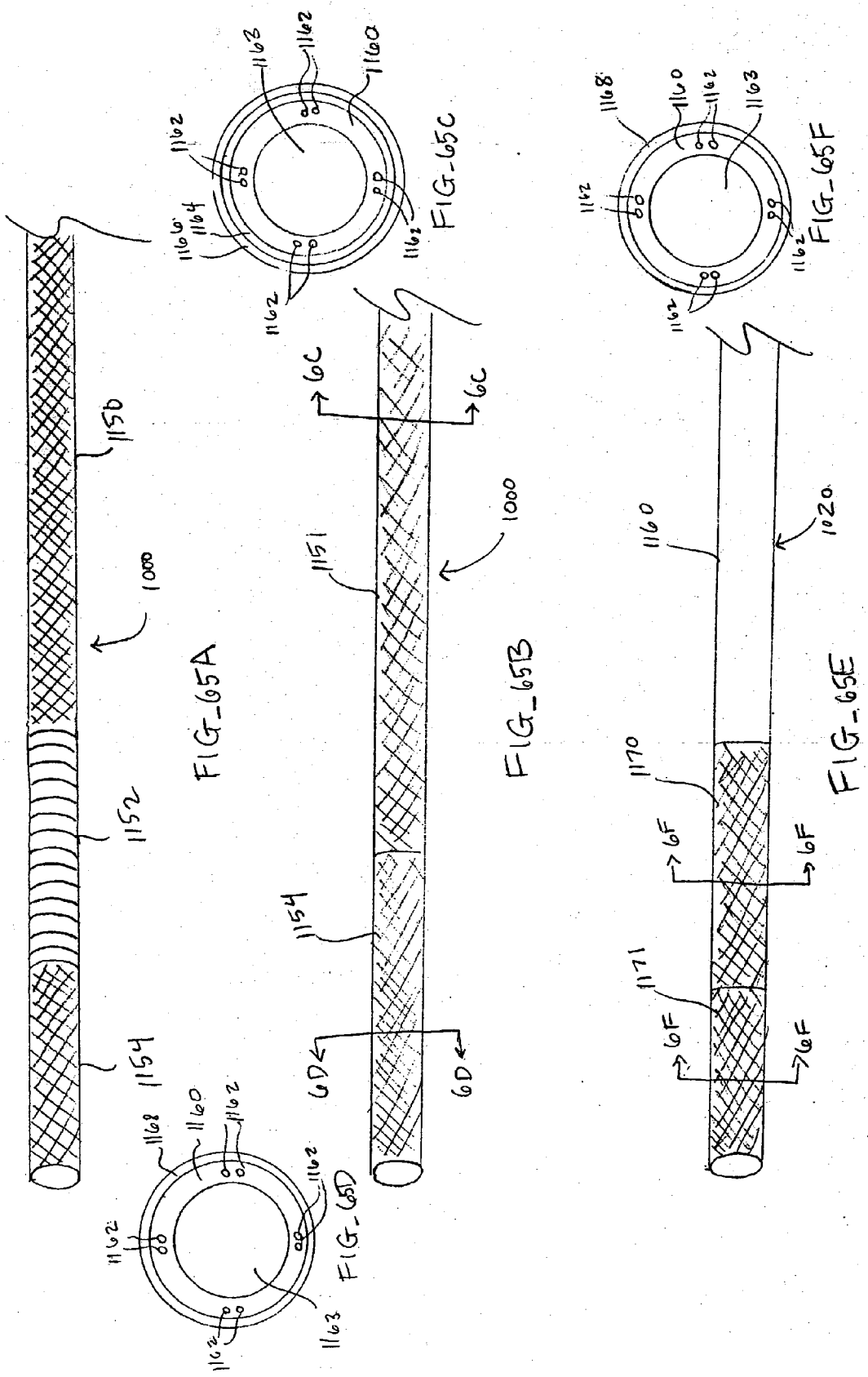

FIG_65A

FIG_65B

FIG_65C

FIG_65D

FIG_65E

FIG_65F

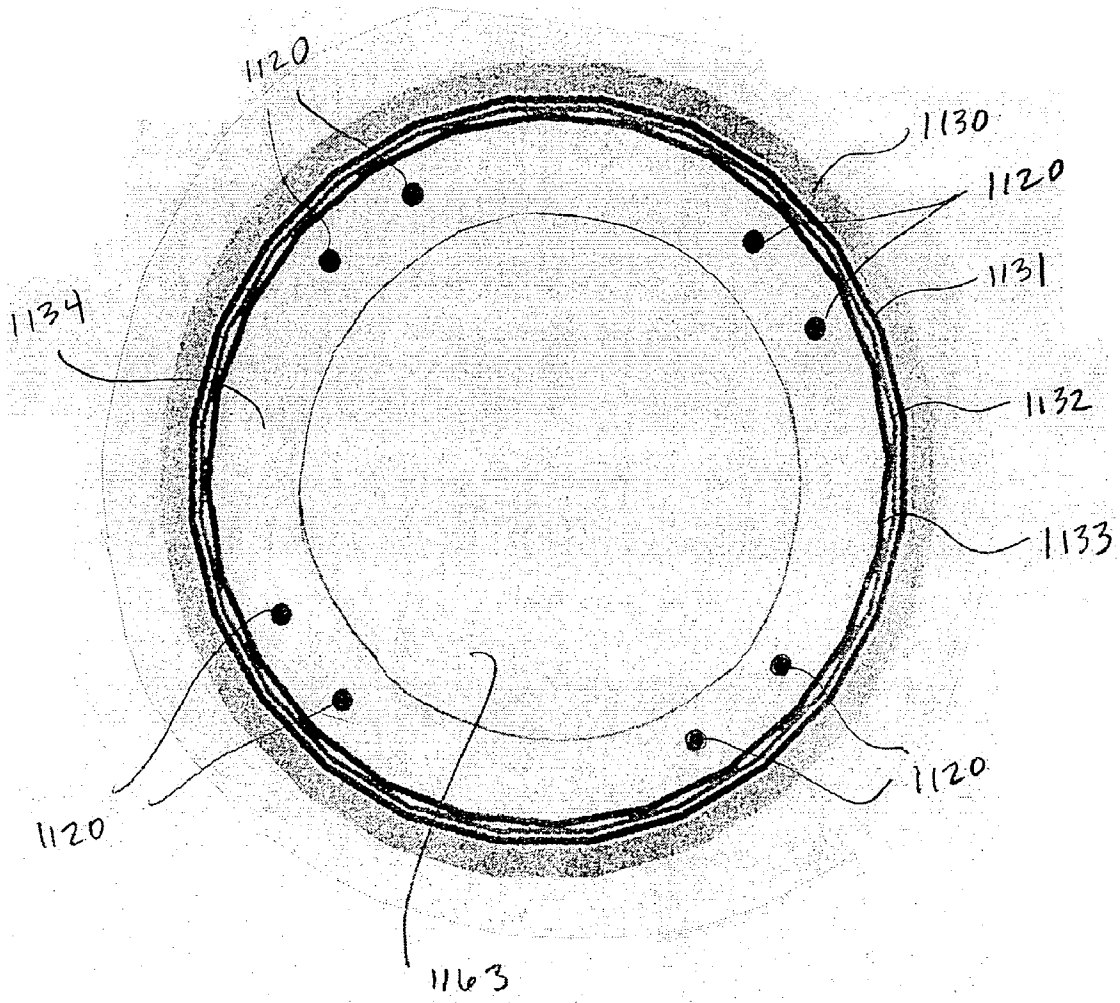

FIG_65G

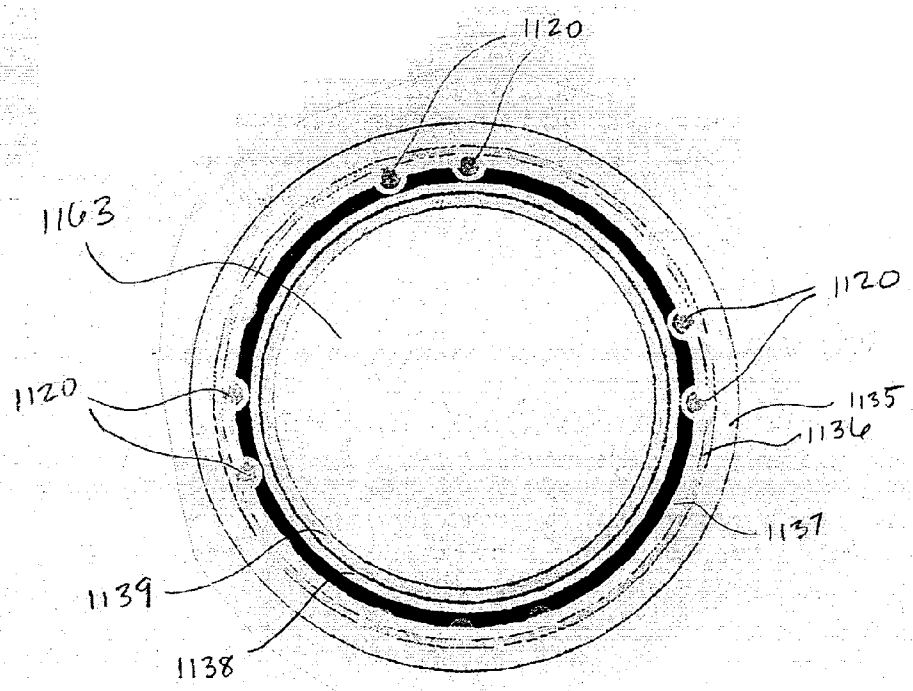

FIG_65H

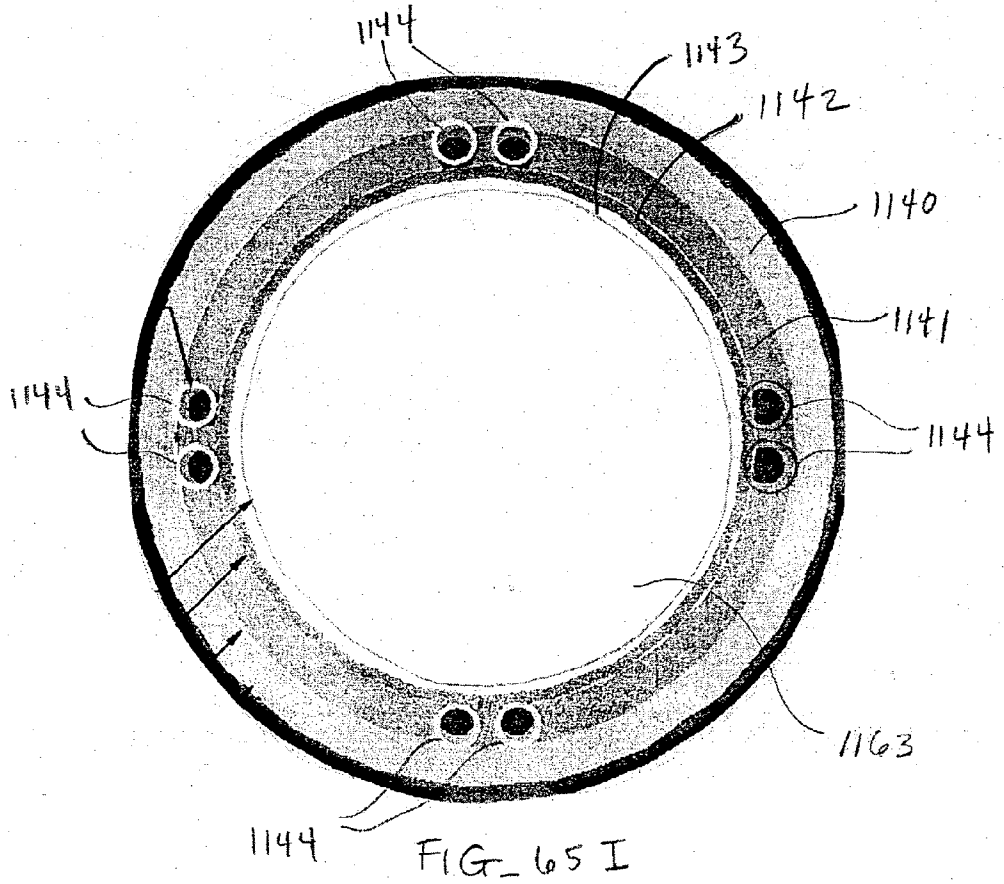

FIG_65I

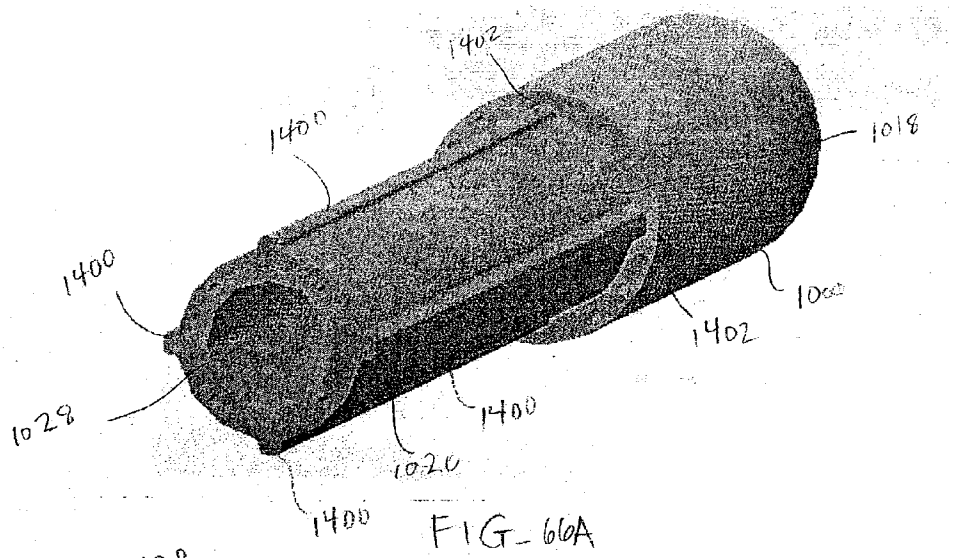

FIG_66A

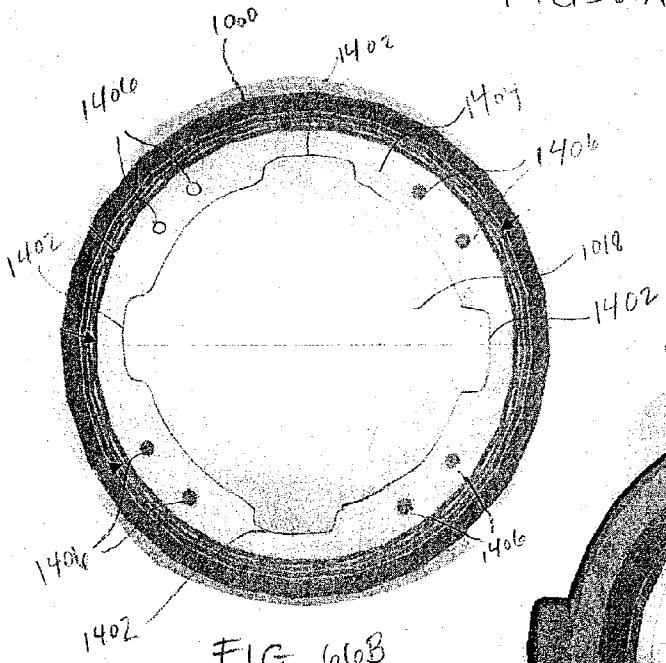

FIG_66B

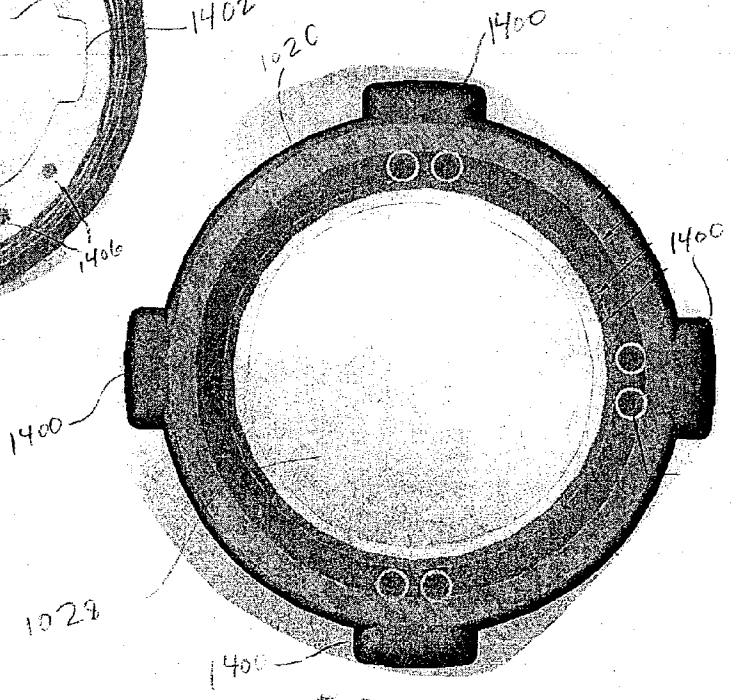

FIG_66C

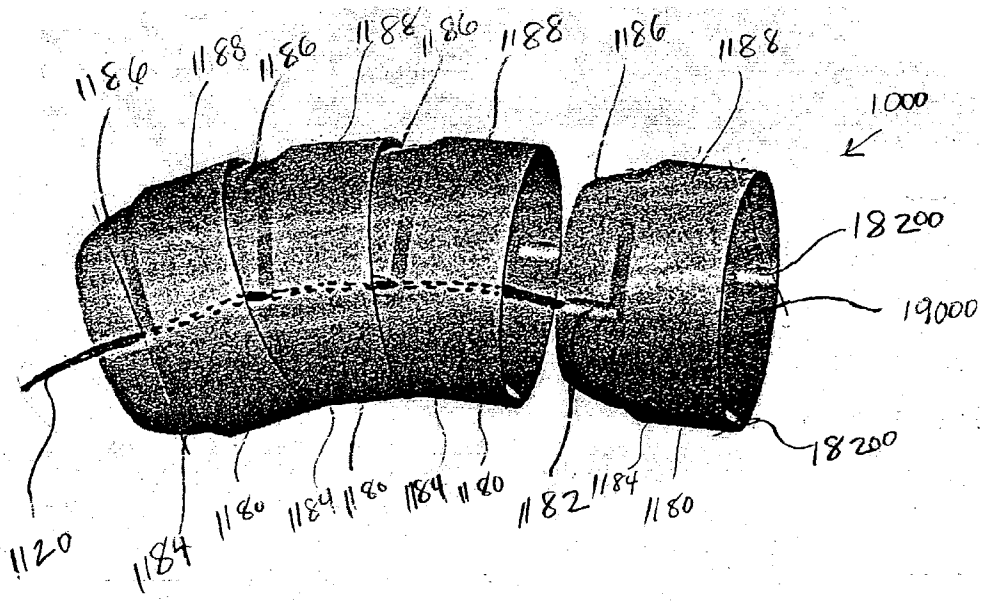

FIG_67A

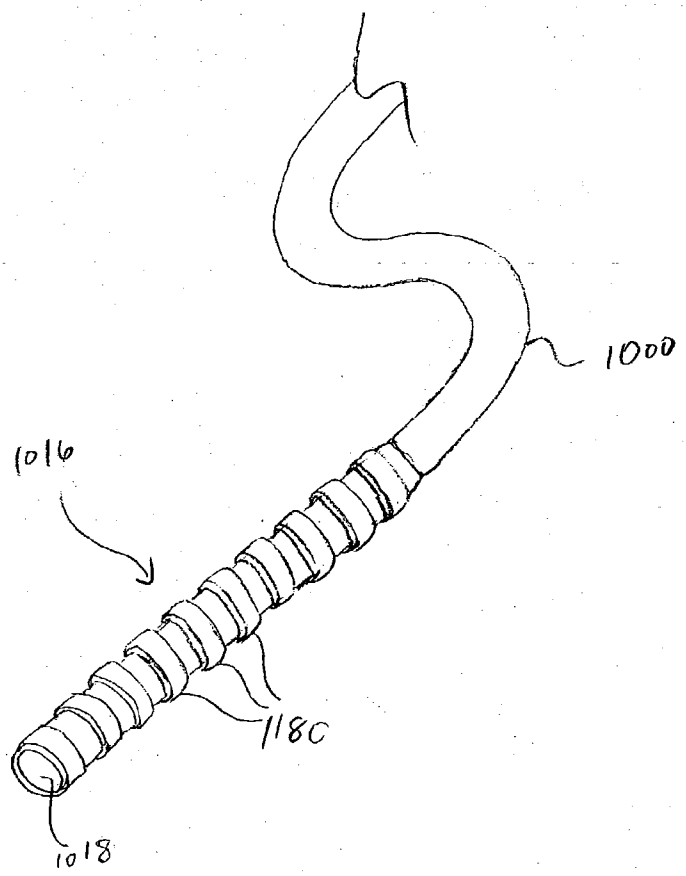

FIG_67B

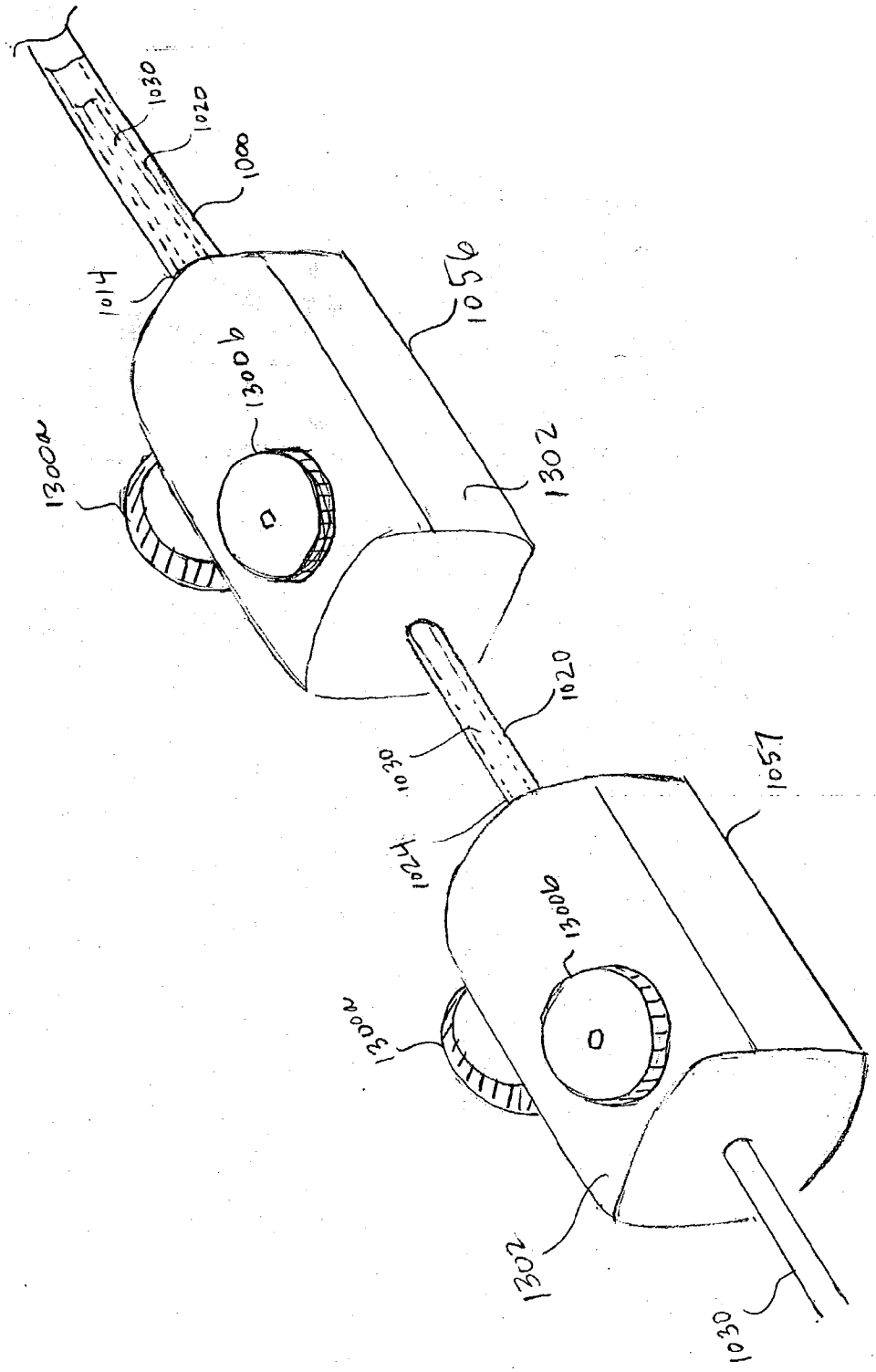
1030
1020
1000
1014
1059
1300b
1300a
1302
1020
1030
1024
1057
1300b
1300a
1302
1030

FIG. 68

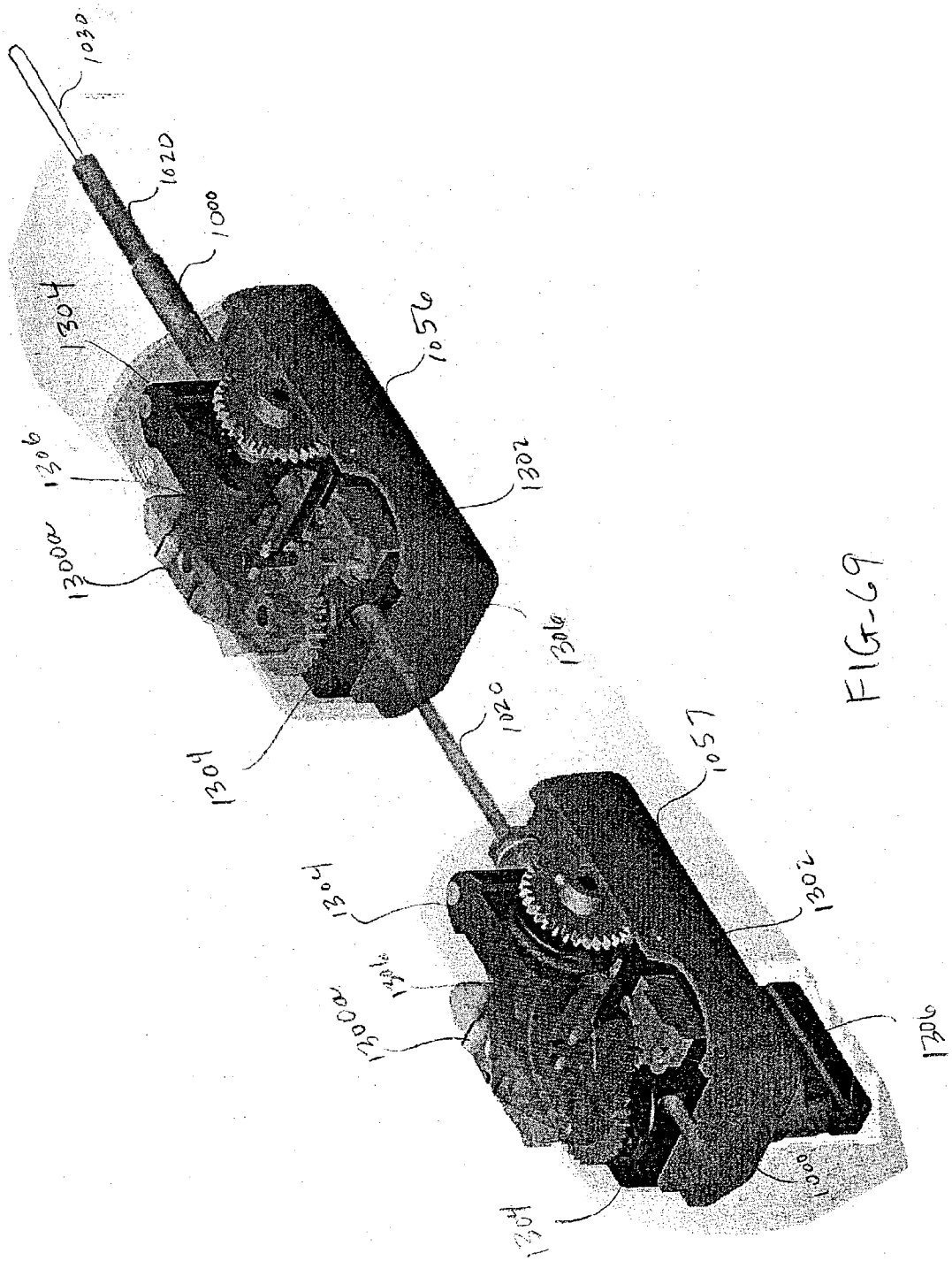
1030
1020
1000
1304
1306
1300a
1304
1056
1302
1306
1020
1304
1306
1300a
1304
1057
1302
1306
1000

FIG-69

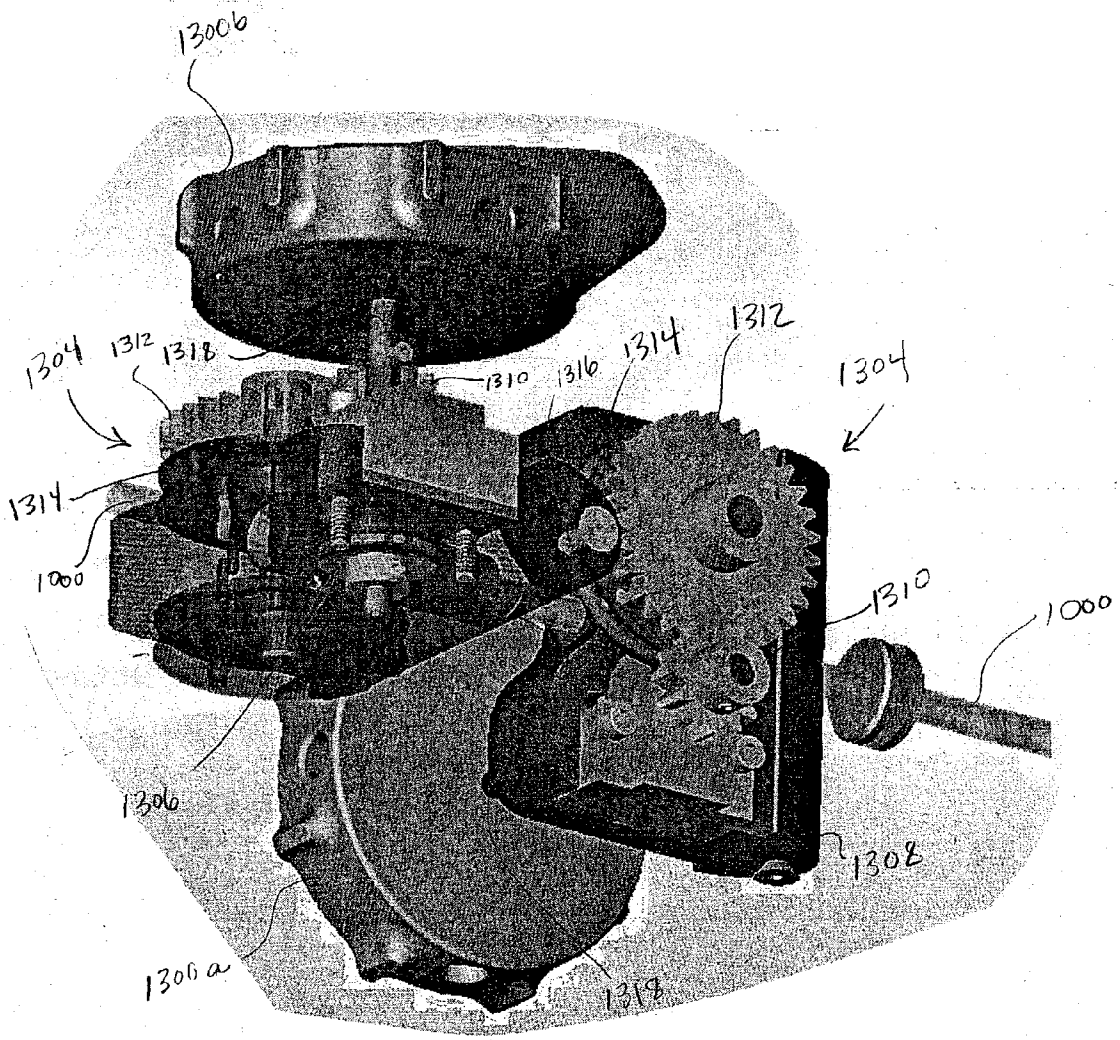
1300b
1304
1312
1318
1310
1316
1314
1312
1304
1314
1000
1310
1000
1306
1308
1300a
1318

FIG_70

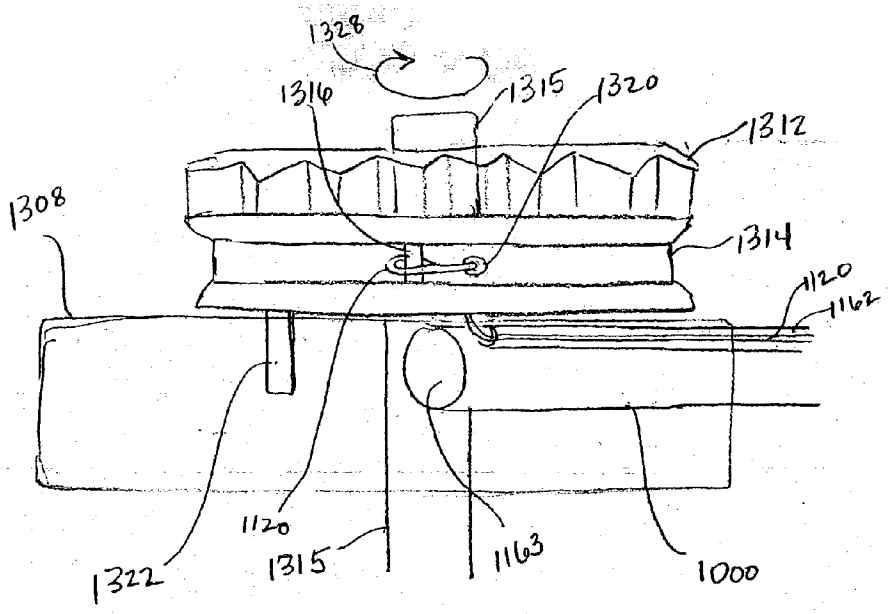

FIG_71.

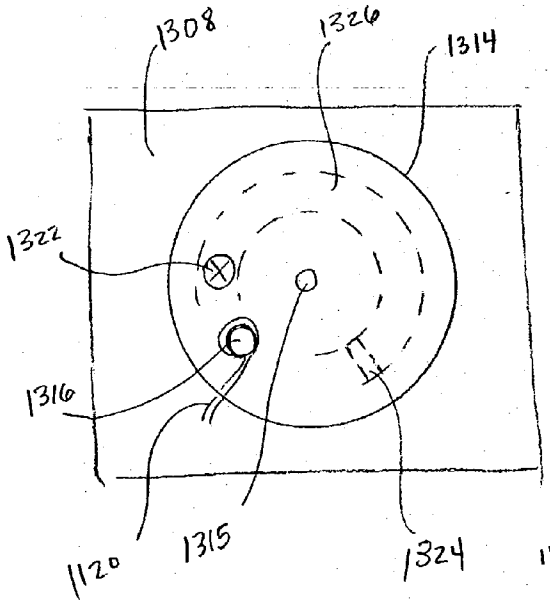

FIG_72A

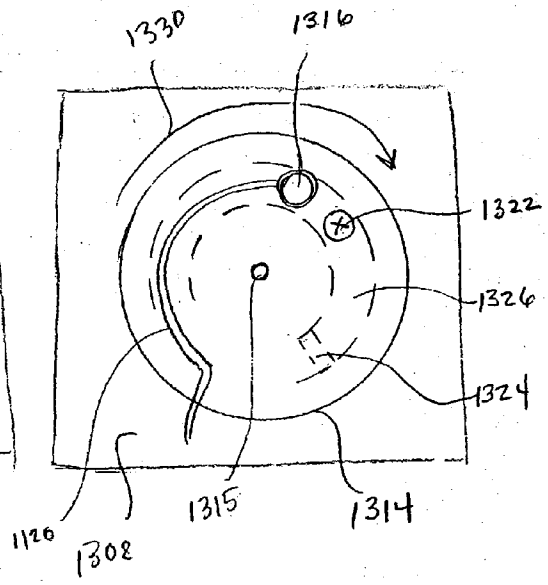

FIG_72B

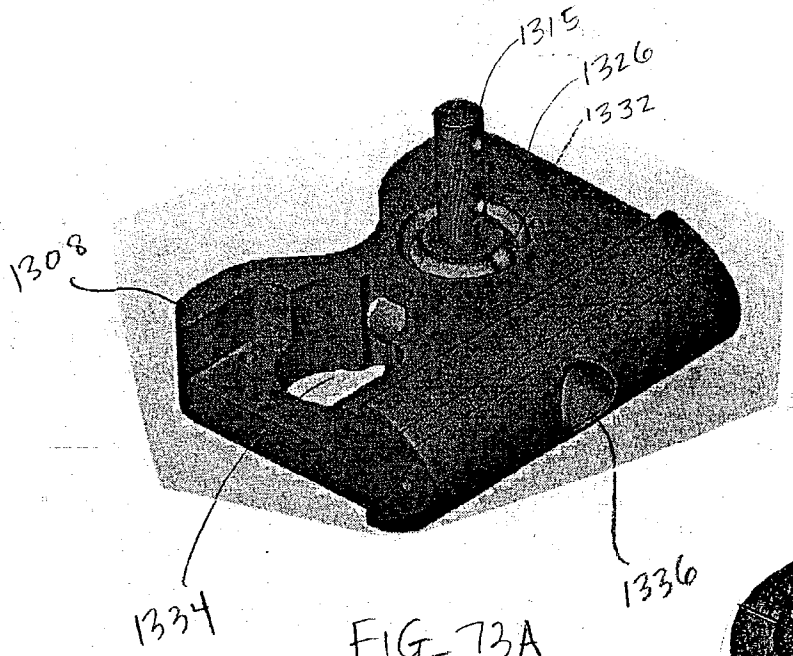

FIG-73A

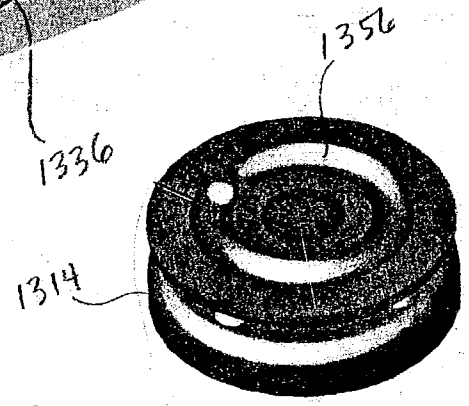

FIG-73C

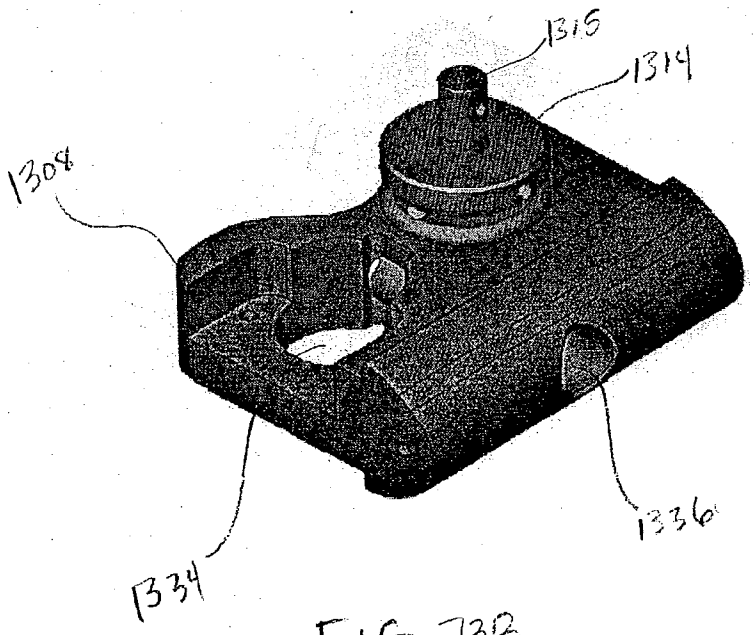

FIG-73B

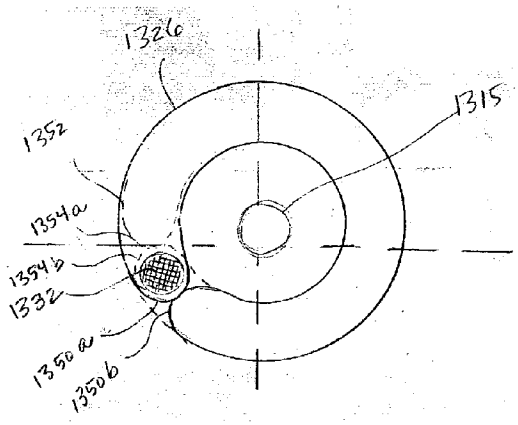

FIG_74A

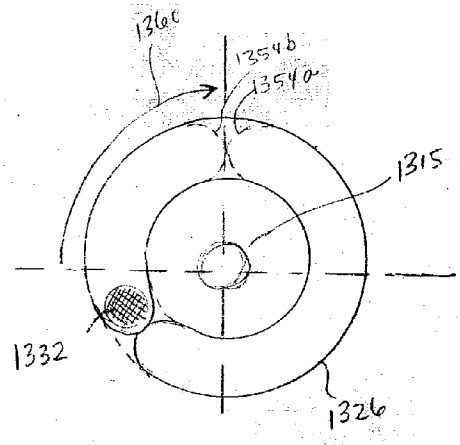

FIG_74B

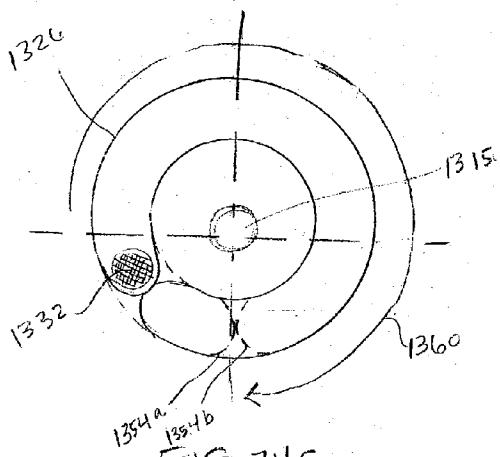

FIG_74C

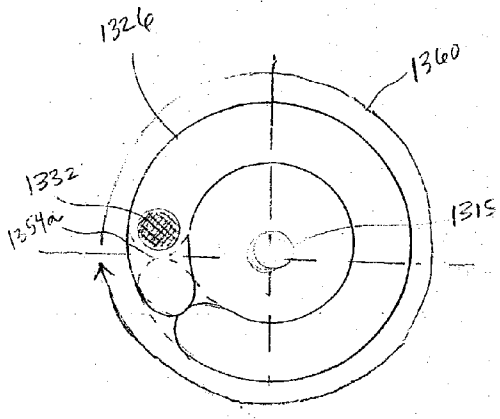

FIG_74D

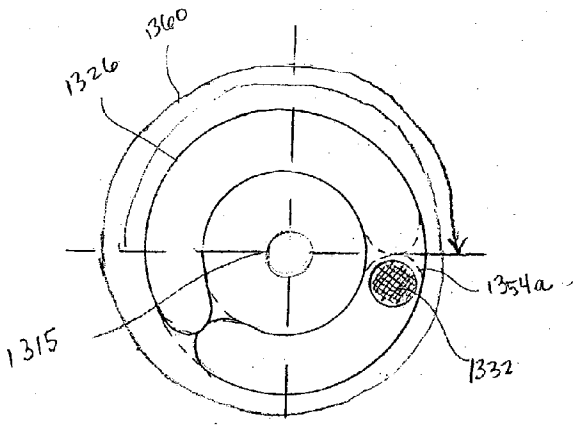

FIG_74E

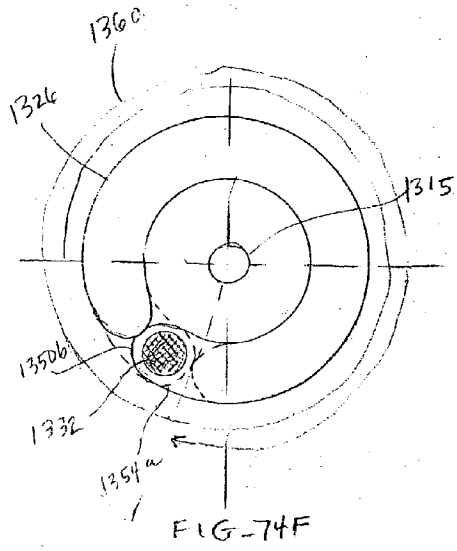

FIG_74F

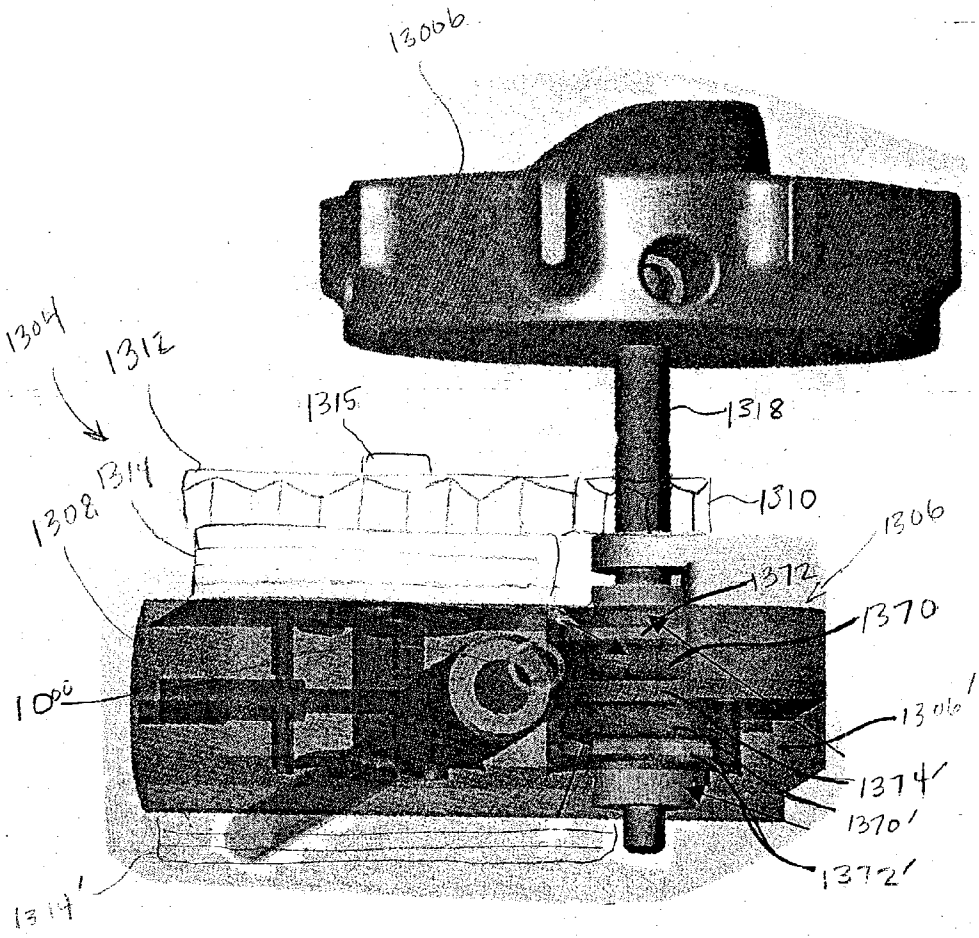
1306b
1304
1312
1315
1318
1314
1310
1308
1306
1372
1370
1306'
1374'
1370'
1372'
1314'

FIG-75

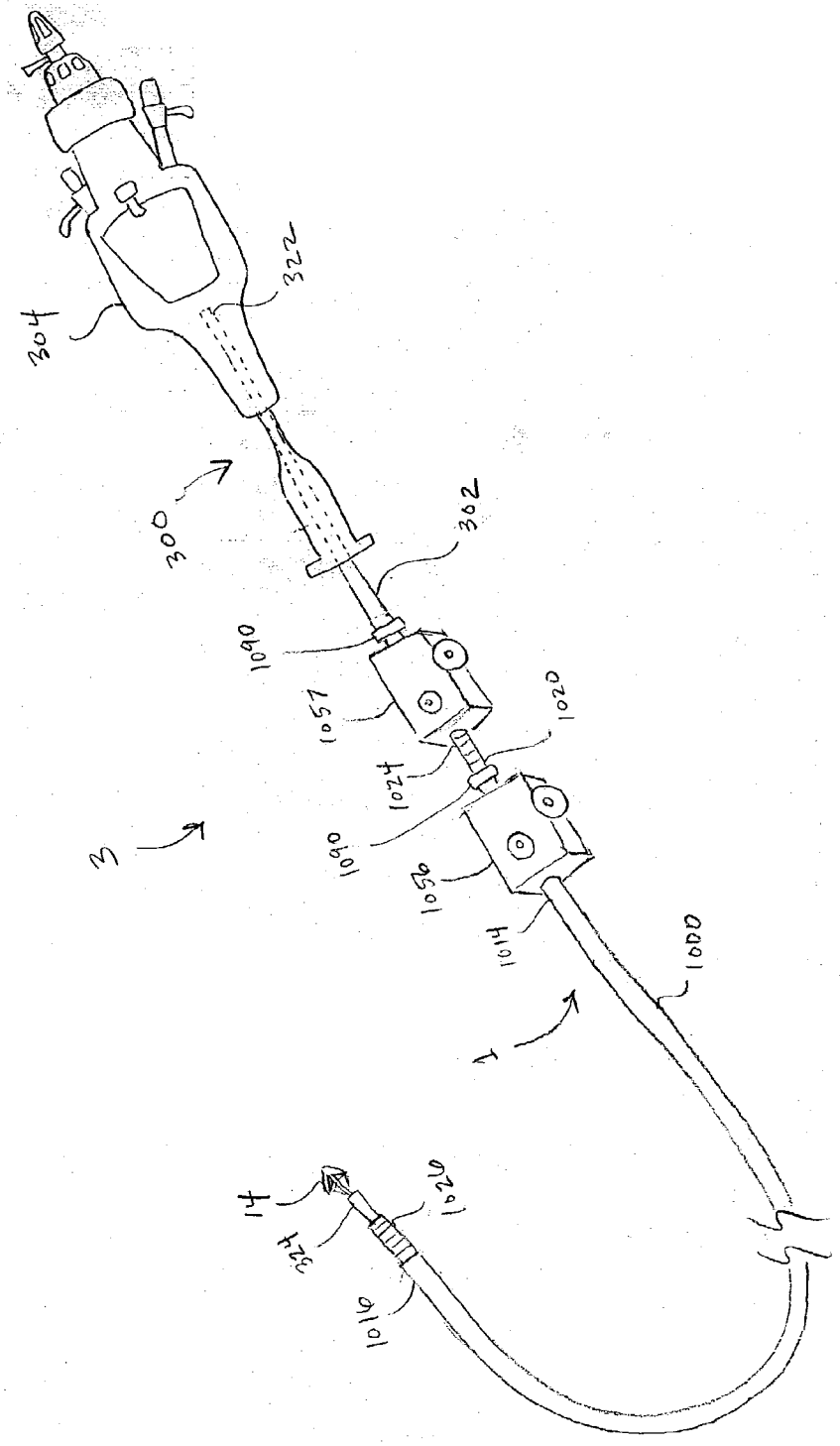
304
322
300
302
1090
1057
1020
1024
1090
1056
1014
1000
3
1
14
324
1026
1016

FIG_76

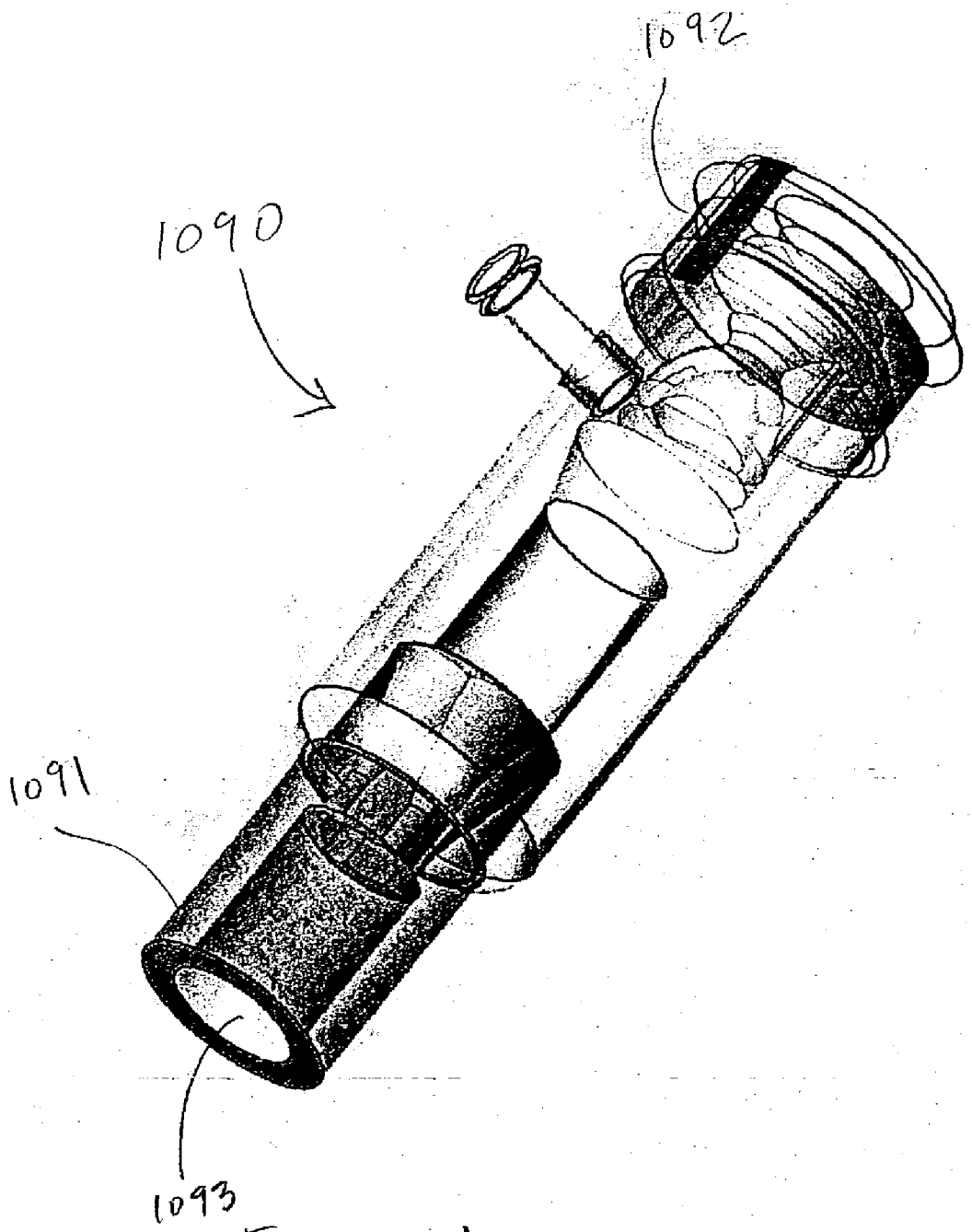

FIG_76A

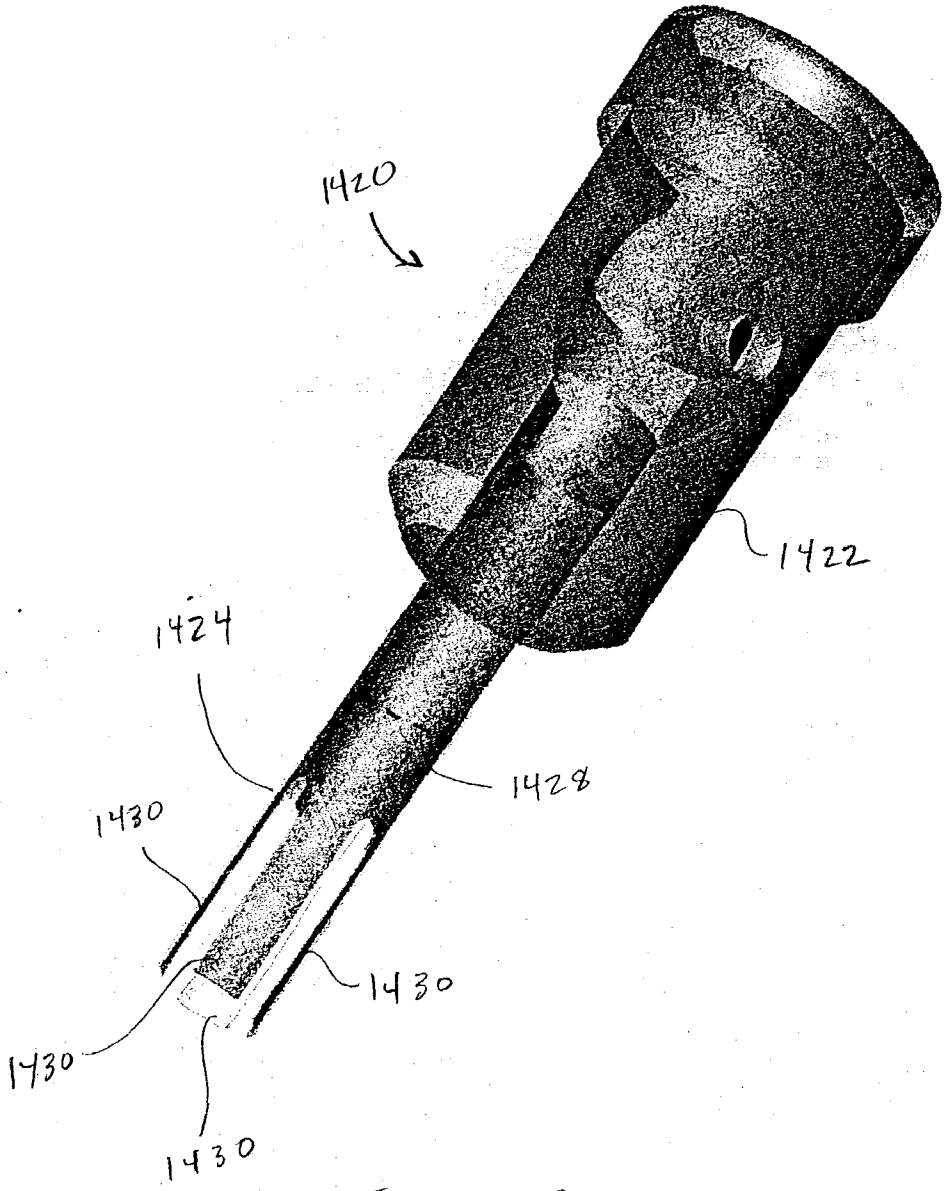

FIG. 76B

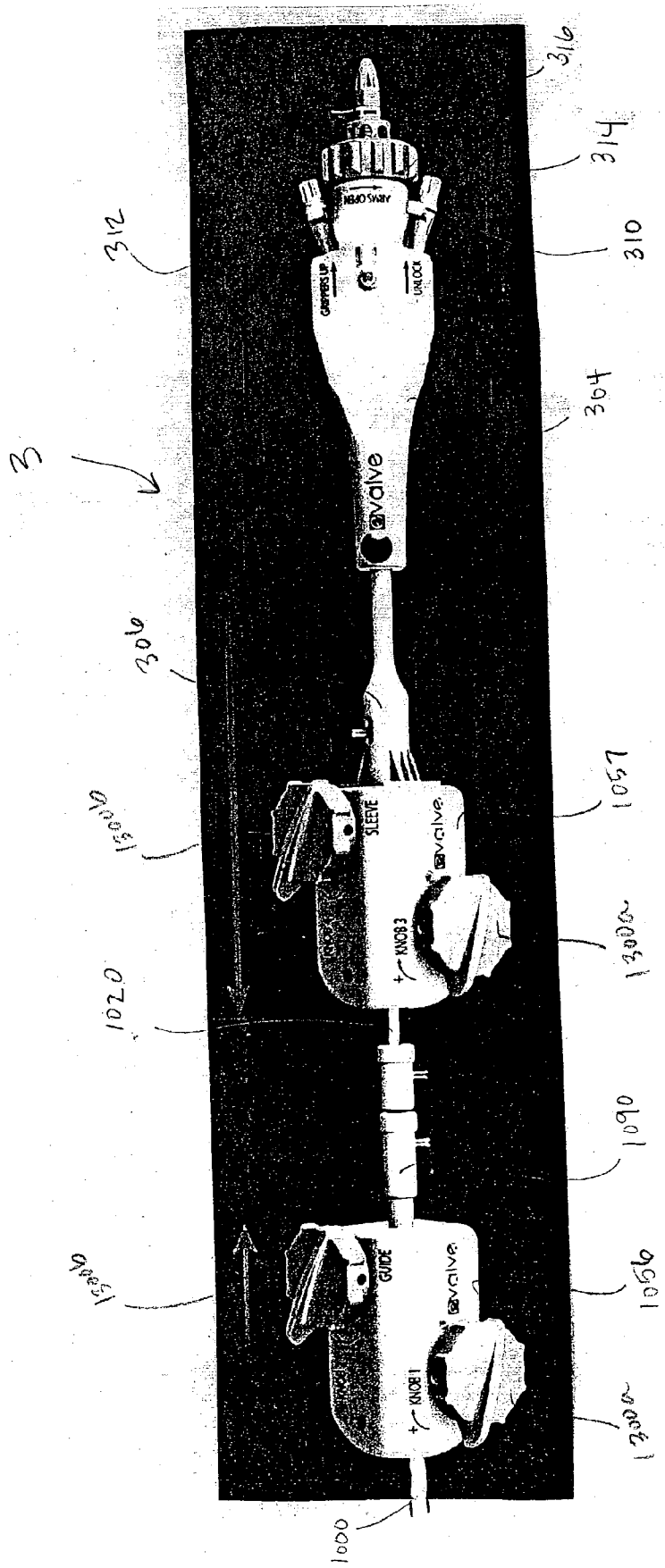
316
314
312
310
304
3
306
1057
1300b
1300a
1020
1090
1056
1300b
1300a
1000
ARMS OPEN
GRIPPERS UP
UNLOCK
valve
SLEEVE
KNOB 3
GUIDE
KNOB 1

FIG_77

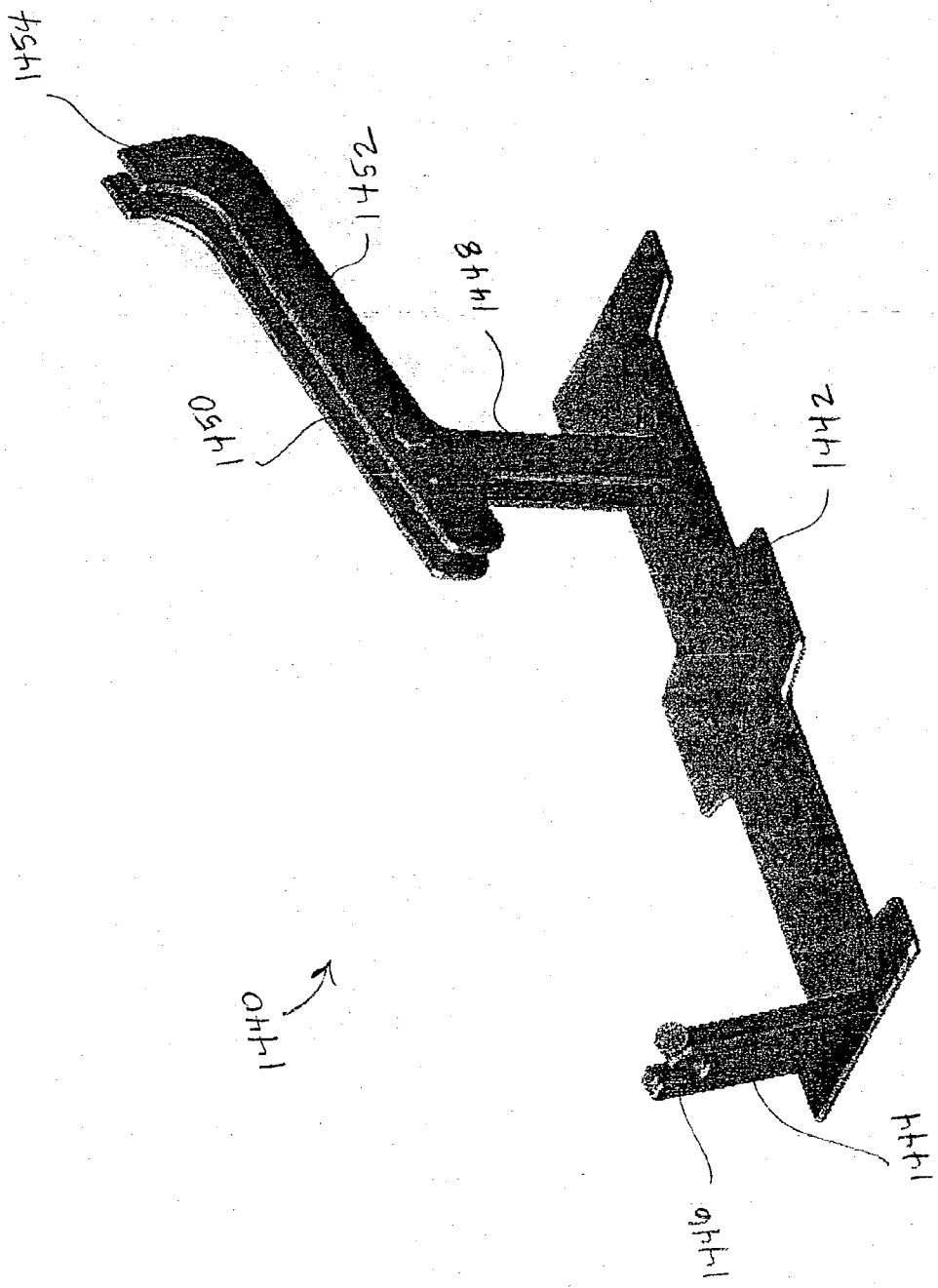

FIG-78

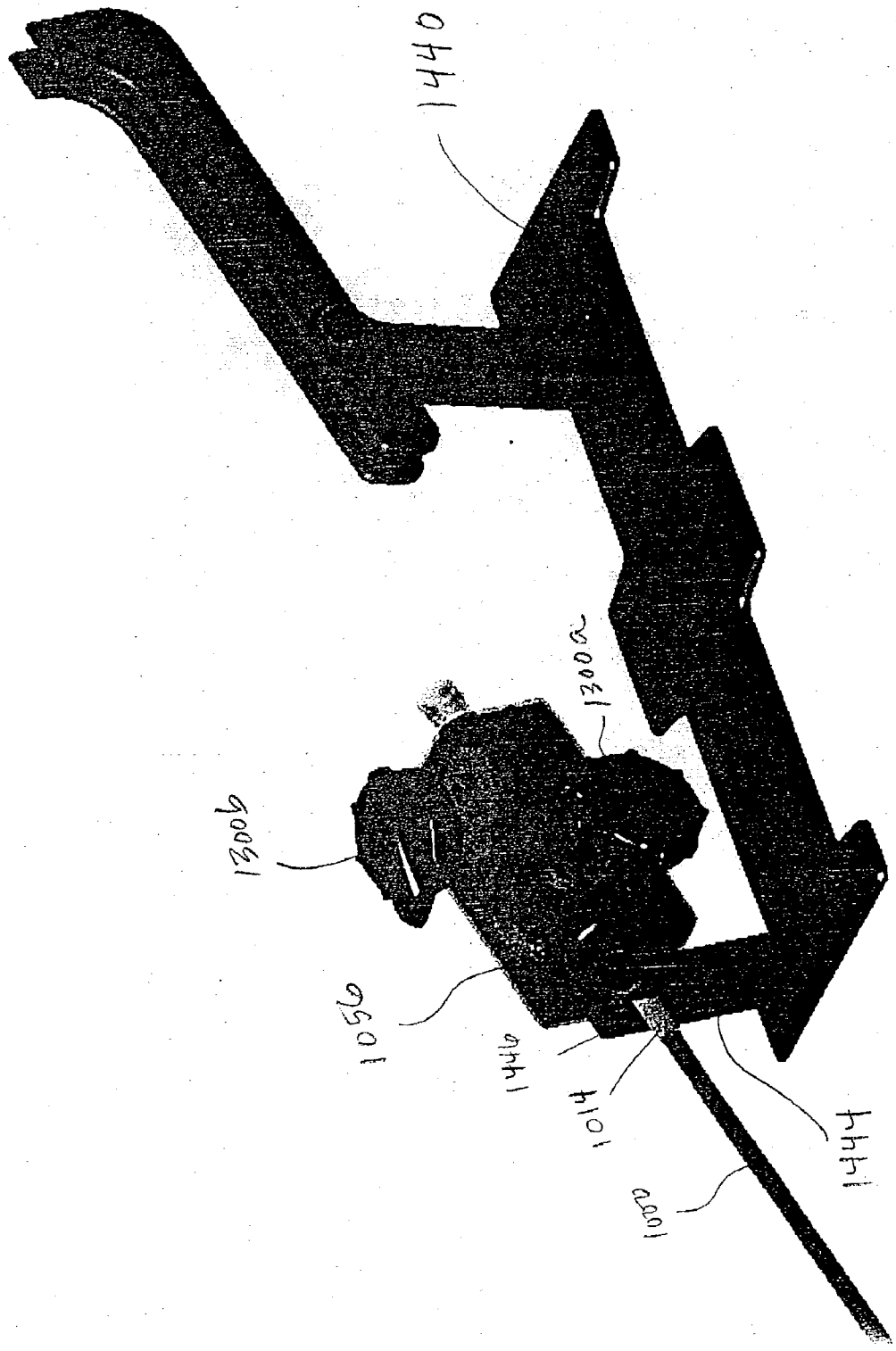

FIG-79

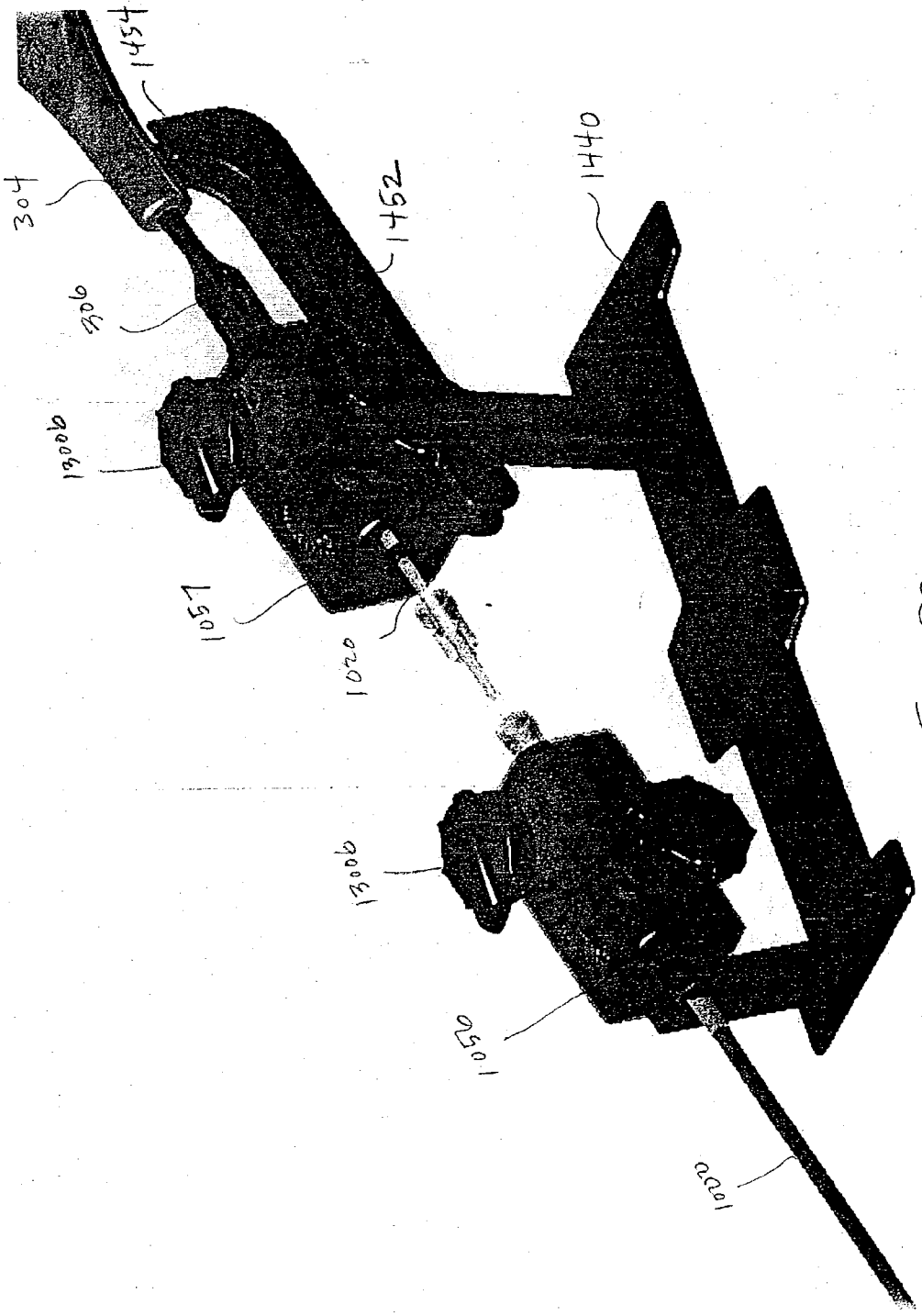

FIG_80

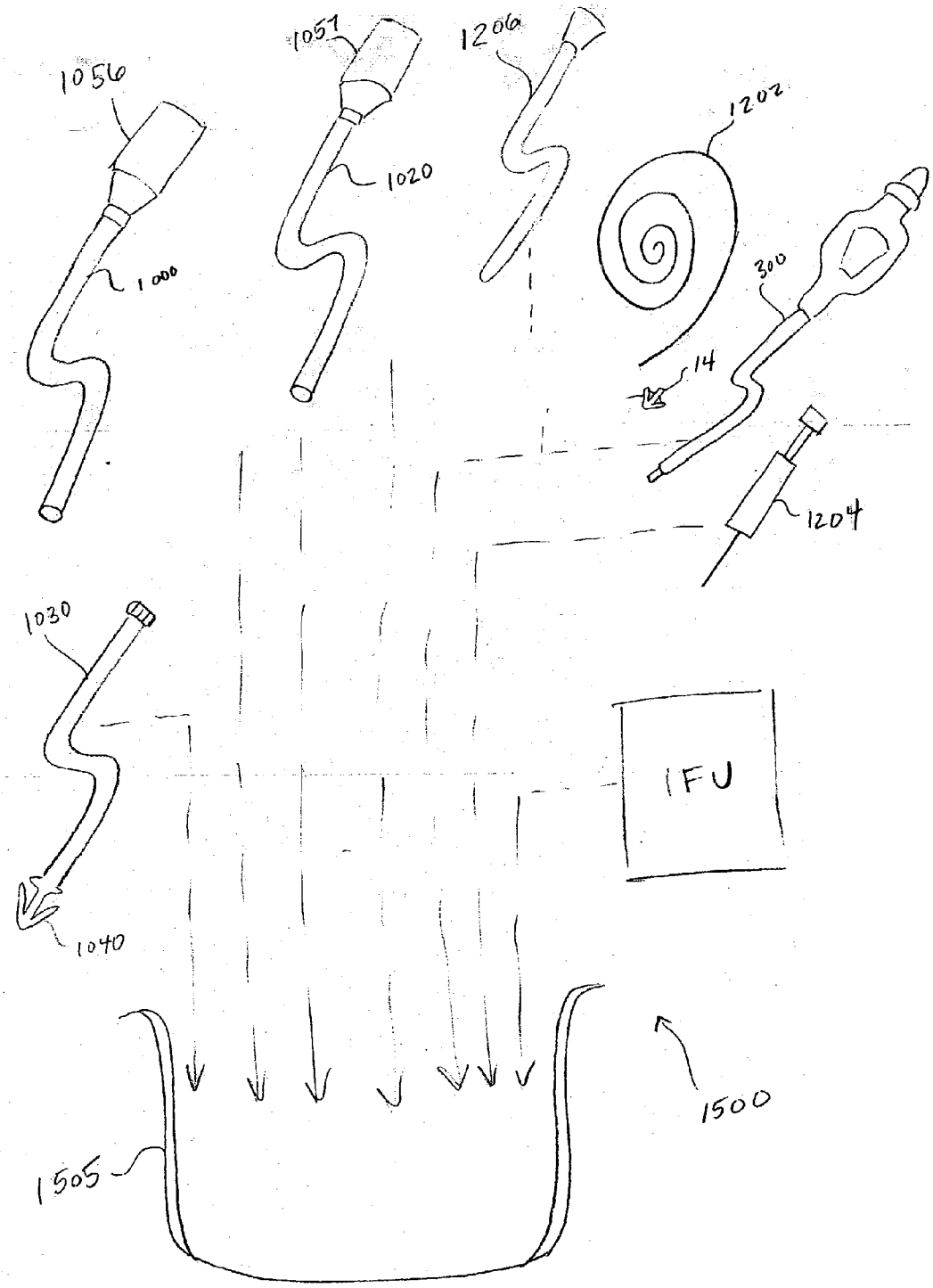
1056
1051
1206
1202
1020
1000
300
14
1204
1030
IFU
1040
1500
1505

FIG_81

MULTI-CATHETER STEERABLE GUIDING SYSTEM AND METHODS OF USE

CROSS-REFERENCES TO RELATED APPLICATIONS

[0001] This application is a continuation-in-part of, and claims the benefit of priority from co-pending U.S. patent application Ser. No. 09/894463, filed Jun. 27, 2001, which is a continuation-in-part of co-pending U.S. patent application Ser. No. 09/544,930, filed Apr. 7, 2000, which claims the benefit of prior Provisional Application No. 60/128,690, filed on Apr. 9, 1999 under 37 CFR §1.78(a), the full disclosures of which are hereby incorporated herein by reference. This application is related to U.S. patent application Ser. No. _____ (Attorney Docket No. 020489-001200US), U.S. patent application Ser. No. _____ (Attorney Docket No. 020489-001400US), and U.S. patent application Ser. No. _____ (Attorney Docket No. 020489-001700US), all of which are filed on the same day as the instant application, the full disclosures of which are incorporated herein by reference.

STATEMENT AS TO RIGHTS TO INVENTIONS MADE UNDER FEDERALLY SPONSORED RESEARCH OR DEVELOPMENT

[0002] NOT APPLICABLE

REFERENCE TO A "SEQUENCE LISTING," A TABLE, OR A COMPUTER PROGRAM LISTING APPENDIX SUBMITTED ON A COMPACT DISK.

[0003] NOT APPLICABLE

BACKGROUND OF THE INVENTION

[0004] 1. Field of the Invention.

[0005] The present invention relates to a guiding system for accessing a body cavity and directing the passage of devices therethrough into the cavity. Particularly, the present invention relates to a multi-catheter steerable guiding system which directs the devices into the cavity in a desired orientation. In some embodiments, the present invention relates to endoluminally or transthoracically accessing an atrium of the heart to direct an interventional catheter toward a cardiac valve.

[0006] To access a target location within the human body from a remote location, a catheter is typically passed through one or more body lumens, such as through the vascular system, to the target location. When the vascular system is used, the catheter is inserted into an artery or vein percutaneously or through a relatively small incision in the patient's body. The catheter is then threaded through the patient's system of blood vessels to reach the desired target area. Often a pathway is created through the vasculature to the target location with the use of an introducer sheath. The sheath is slipped over a dilator or obturator which is advanced to the target location. The dilator or obturator is then removed and the sheath remains in place for use as a conduit for a variety of medical devices to access the target location. Such devices may include surgical instruments, fiber optic cables for visualization, lasers, electronic devices, or sensors capable of monitoring physiological parameters in situ to name a few. Although such access reduces the need for traditional invasive surgery, challenges arise related to control, manipulation, and positioning of instruments near the target location, particularly within a target body cavity.

[0007] Since cavities comprise open spaces, a device advanced to the cavity will typically protrude into the cavity at the angle in which it entered. If the target tissue is not within this pathway, the device will need to be steered toward the target tissue. If more than one device is used during a procedure, each device will need to be steered and repositioned when used. This increases the time and cost of the procedure and also the risk of misalignment.

[0008] For example, to gain access to the left atrium of the heart, the catheter and/or access sheath may be tracked from a puncture in the femoral vein, through the inferior vena cava, into the right atrium and through a puncture in the intra-atrial septum to the left atrium. This pathway may then be used to access the mitral valve which lies between the left atrium and the left ventricle. Since the mitral valve is located below the point of entry into the left atrium, devices which are inserted will need to be directed downward after entry, toward the mitral valve. In addition, devices used for applying interventional therapies to the mitral valve may require precise alignment with the valve commissures, leaflets, or coaptation line to perform the procedure. The devices may also be directed through the valve chordae or papillary muscles, for example, for interventional therapy to the mitral valve. When such procedures require the use of more than one instrument, each instrument would be dependent upon proper positioning in relation to the valve. This would require that positioning or steering mechanisms be built into each instrument and each instrument would be required to be properly positioned when introduced. This adds cost, complexity, and time to the overall procedure.

[0009] In other examples, the catheter and/or access sheath may also be tracked from a puncture in the femoral vein through the intra-atrial septum to the left atrium. This pathway may be used to access the left atrium for ablation of the atrium wall or ablation around the pulmonary veins. Such interventional therapies would require precise alignment with target areas for proper ablation placement. It may further be appreciated that alternative access routes may be desired to alternative body cavities. In any case, many of the same obstacles are encountered.

[0010] To overcome some of these challenges, pre-shaped access sheaths have been developed to direct instruments that are passed therethrough. For example, an access sheath having a pre-shaped curve at its distal end has been developed to both assist in negotiating twists and branches common in a patient's arterial or venous system and to maintain a shape once positioned within a target cavity. Since the pre-shaped curve is fixed into the access sheath at the time of manufacture, the radius, extent of the curvature and overall shape generally cannot be altered. Due to anatomical variations, extensive pre-surgical planning would be necessary to determine the correct curvature of the access sheath. Such tailoring would be prohibitively complex and a single predicted curvature would most likely still require additional repositioning once inside the body. Continuously replacing the single pre-shaped access catheter in hopes of obtaining the proper curvature would be expensive and time consuming, possibly placing the patient at additional risk.

[0011] Further, some steerable guide catheters and delivery catheters have been developed to more effectively navigate through the tortuous pathways of some body lumens, particularly the vascular system. However, navigation through such lumens typically only requires steering the catheter tip toward a particular branch at a bifurcation, a relatively simple maneuver. Such steerability, basically the ability to form a single curvature, is generally inadequate for accessing and directing the catheter toward a target in a cavity. In particular, when targeting the mitral valve within the cavity of the left atrium or left ventricle, many more variables are present, such as the type of approach, the variability of anatomy and the various targets associated with the mitral valve, such as various points on the leaflets, the commissures, the free edges, the chordae tendinae, etc. These variables increase the need for a steerable guide catheter that can provide a higher degree of articulation than a single curve catheter or a catheter which does not provide compound curves in an adjustable manner.

[0012] For these reasons, it would be desirable to provide an access or guiding system having an adjustable distal end which is capable of being positioned within a target body cavity in a desired orientation. The system should have a large lumen diameter to accommodate the passage of a variety of devices, should have good wall strength to avoid kinking or collapse when bent around tight curves, and should have good column, tensile, and torsional strength to avoid deformation when the devices are passed through the lumen and torqued or translated. The steering mechanisms should provide for a high degree of controlled deflection at the distal end of the system but should not take up significant lumen area to allow for passage of interventional devices. Further, the system should be positionable in a manner which allows compound curves to be formed, for example curvature within more than one plane. Such manipulation should allow fine control over the distal end to accommodate anatomical variations within the same type of body cavity and for use in different types of body cavities.

[0013] 2. Description of the Background Art

[0014] Hermann et al. (U.S. Pat. No. 5,843,031) describes a large-diameter introducer sheath having a hemostasis valve and a removable steering mechanism. The steering mechanism is described to be within an obturator which is positioned within the sheath during positioning and is then removable. Adair (U.S. Pat. No. 5325,845) describes a steerable sheath having an articulatable member which is deformable to allow articulation. Kordis (U.S. Pat. No. 5,636,634) describes a sheath which is positioned by a separate, dedicated steering catheter.

[0015] A number of the other references refer to guidewires or catheters which themselves are steerable by means of wires. For example, Stevens-Wright et al. (U.S. Pat. No. 5,462,527) describes a handle which applies tension selectively to two or four pull cables to steer an attached catheter. Stevens-Wright et al. (U.S. Pat. No. 5,715,817) further describes improvements in actuating the tip of the catheter described in Stevens-Wright et al. '527.

[0016] Hammerslag (U.S. Pat. No. 5,108,368) describes a steerable guidewire or catheter wherein the tip is deflectable through a full 360 degree range of motion by means of axially moveable deflection wires extending throughout. Hammerslag (U.S. Pat. No. 5,820,592) describes a guide catheter through which a torque control wire or a deflection wire extends. Manipulating an actuator controls the wire to steer or aim the guide catheter. Savage (U.S. Pat. No. 5,368,564) and Savage et al. (U.S. Pat. No. 5,507,725) also describe a steerable catheter having wire members extending through the catheter wall to manipulate the tip.

[0017] Likewise, the following also provide variations of the steerable catheters which utilize wires for manipulation: Accisano, III (U.S. Pat. No. 5,571,085), Krauter (U.S. Pat. No. 5,359,994), West et al. (U.S. Pat. No. 5,318,525), Nardeo (Pub. No. US 2001/0037084 Al), Bumbalough (U.S. Pat. No. 6,267,746), Webster, Jr. (U.S. Pat. No. 6,123,699), Lundquist et al. (U.S. Pat. No. 5,195,968) and Lundquist et al. (U.S. Pat. No. 6,033,378). Falwell et al. (U.S. Pat. No. 6,319,250) describes a catheter having any suitable steering mechanism known in the art.

BRIEF SUMMARY OF THE INVENTION

[0018] The present invention provides devices, systems, methods and kits for accessing a body cavity and providing a directed pathway toward a target tissue within the cavity. The directed pathway is provided by a multi-catheter guiding system which is positioned in a desired configuration, generally directed toward the target tissue. Devices may then be passed through the guiding system to the target tissue. Depending on the location of the target tissue and the desired angle of approach, the guiding system may be required to maintain one or more curves in one or more planes to properly direct the devices. The multi-catheter guiding system of the present invention comprises an outer guiding catheter and a coaxially positioned inner guiding catheter, each of which independently form curvatures so that together the curves properly direct the device. In addition, the guiding system may have one or more locking features to hold the guiding catheters in the desired configuration.

[0019] In a first aspect of the present invention, a multi-catheter guiding system is provided for accessing the body cavity. The multi-catheter guiding system comprises an outer guiding catheter having a proximal end, a distal end and a central lumen therethrough and an inner guiding catheter also having a proximal end, a distal end and a central lumen therethrough. The inner guiding catheter is positionable at least partially within the central lumen of the outer guiding catheter, typically so that the distal end of the inner guiding catheter extends beyond the distal end of the outer guiding catheter.

[0020] The distal ends of both guiding catheters are sized appropriately for the intended method of approaching the body cavity. The body cavity may be approached laparoscopically, thorascopically, endoscopically, percutaneously or by any suitable method. Typically, the distal end is passable through a body lumen, such as a blood vessel within the vascular system. This is particularly the case when approaching a chamber of the heart. Other body lumens may include, for example, the esophagus for approaching the stomach or the rectum for approaching the gastrointestinal system. In other instances, the distal end is passable directly through body tissues, such as in a direct access procedure to the heart. The central lumen extends through the length of the shaft and is sized for passage of device, such as a catheter or tool, therethrough. To accommodate a variety of devices, the central lumen is generally relatively large in comparison to the total cross section of the shaft.

[0021] The outer guiding catheter and inner guiding catheter are each capable of forming a curve. Generally, the curve of the outer guiding catheter differs from that of the inner guiding catheter so that together the curves form a compound curve. In some embodiments, the outer guiding catheter is capable of forming a primary curve near its distal end and the inner guiding catheter is capable of forming a secondary curve near its distal end. Typically, the primary curve and secondary curve lie in different planes, and in some embodiments the curves lie in substantially orthogonal planes. Often the primary curve has a radius of curvature in the range of 0.125 in. to 1.000 in. and the secondary curve often has a radius of curvature in the range of 0.050 in. to 0.750 in.

[0022] Additionally, in some embodiments, the inner guiding catheter is moveable through an angle "theta." The secondary curve and the angle theta may lie in different planes, and these planes may be substantially orthogonal. In some embodiments, the primary curve, secondary curve and the angle theta each lie in different planes, sometimes in substantially orthogonal planes. The angle theta may be in the range of −180° to +180°, typically in the range of −90° to +90°, possibly in the range of −60° to +60°, −45° to +45°, or −30° to +30° or less. Likewise, in some embodiments, the outer guiding catheter is capable of forming an additional curve near its distal end. This additional curve provides lift to its distal end and therefore to the distal end of the inner guiding catheter. The additional curve and the primary curve may lie in different planes, and these planes may be substantially orthogonal.

[0023] The curves of the inner and outer guiding catheter may be formed by any suitable means. In some embodiments, one or more of the curves are preset so that the curve is formed by shape memory. For example, the outer guiding catheter may be comprised of a flexible polymer material in which a curve is preset by heating. When the guiding catheter is loaded on a guidewire, dilator, obturator or introductory device, the flexible guiding catheter follows the shape or path of the introductory device for proper positioning within the body. When the introductory device is pulled back and/or removed, the guiding catheter resumes the shape memory configuration which was preset into the catheter.

[0024] Alternatively, the curves may be formed or enhanced with the use of one or more steering mechanisms. In some embodiments, the steering mechanism comprises at least one pullwire attached to one of the guiding catheters, wherein actuation of the steering mechanism applies tension to the at least one pullwire whereby the curve is formed. The pullwires can extend through the central lumen or through individual lumens in the wall of the guiding catheter. It may be appreciated that more than one pullwire may extend through any given lumen. The presence of each pullwire allows curvature of the catheter in the direction of the pullwire. For example, when pulling or applying tension to a pullwire extending along one side of the catheter, the catheter will bend, arc or form a curvature toward that side. To then straighten the catheter, the tension may be relieved for recoiling effects or tension may be applied to a pullwire extending along the opposite side of the catheter. Therefore, pullwires are often symmetrically placed along the sides of the catheter.

[0025] Thus, in some embodiments at least two pullwires are attached in diametrically opposed locations wherein applying tension to one of the pullwires curves the catheter in one direction and applying tension to the pullwire attached in the diametrically opposed location curves the catheter in another direction opposite to the one direction. The diametrically opposed pullwires may be considered a set. Any number of sets may be present in a catheter to provide unlimited directions of curvature. In some embodiments, the steering mechanism comprises at least four pullwires wherein two of the at least four pullwires are attached to the guiding catheter in diametrically opposed locations and another two of the at least four pullwires are attached to the guiding catheter in diametrically opposed locations. In other words, the catheter may include two sets of pullwires, each set functioning in an opposing manner as described. When the two sets of pullwires are positioned so that each pullwire is 90 degrees apart, the catheter may be curved so that the distal end is directed from side to side and up and down. In other embodiments, the steering mechanism comprises at least three pullwires, each pullwire symmetrically positioned approximately 120 degrees apart. When tension is applied to any of the pullwires individually, the catheter is curved in the direction of the pullwire under tension. When tension is applied to two pullwires simultaneously, the catheter is curved in a direction between the pullwires under tension. Additional directions may also be achieved by various levels of tension on the pullwires. It may be appreciated that any number, combination and arrangement of pullwires may be used to direct the catheters in any desired direction.

[0026] In some embodiments, a portion of one of the guiding catheters comprises a series of articulating members. In this case, the at least one pullwire is attached to one of the articulating members so that the curve is formed by at least some of the articulating members. Each pullwire is attached to the catheter at a location chosen to result in a particular desired curvature of the catheter when tension is applied to the pullwire. For example, if a pullwire is attached to the most distal articulating member in the series, applying tension to the pullwire will compress the articulating members proximal to the attachment point along the path of the pullwire. This results in a curvature forming in the direction of the pullwire proximal to the attachment point. It may be appreciated that the pullwires may be attached to any location along the catheter and is not limited to attachment to articulating members. Typically, the articulating members comprise interfitting domed rings but may have any suitable shape.

[0027] It may be appreciated that curves in the inner and outer guiding catheters may be formed by any combination of mechanisms. For example, the outer guiding catheter may form a curve by shape memory while the inner guiding catheter forms a curve by actuation of a steering mechanism. Alternatively, the outer guiding catheter may form a curve by actuation of a steering mechanism while the inner guiding catheter forms a curve by shape memory. Or, both the curves in the outer and inner guiding catheter may be formed by shape memory or both may be formed by actuation of steering mechanisms. Still further, in the outer guiding catheter, the primary curve and the additional curve each may be formed by different mechanisms. Likewise, in the inner guiding catheter, the secondary curve and the movement through the angle theta may be achieved by different

mechanisms. However, typically the same steering mechanism forms each of the curves or movements in a single guiding catheter.

[0028] The steering mechanisms may be actuated by manipulation of actuators located on a handle. The handle is connected with the proximal end of the outer guiding catheter and/or the inner guiding catheter and remains outside of the body. The actuators may have any suitable form, including buttons, levers, knobs, switches, toggles, dials, or thumbwheels, to name a few. When pullwires are used, each actuator may apply tension to an individual pullwire or to a set of pullwires. Generally, a different actuator is used to form each curvature, such as the primary curvature and secondary curvature, and to cause movement through the angle theta. The handle may also include a locking actuator to actuate a locking mechanism.

[0029] Locking holds the catheters in the curved positions. By such locking, the multi-catheter guiding system is maintained in position while devices are passed therethrough. The system will retain sufficient rigidity to deflect and guide a non-steerable interventional device through its central lumen and direct the device to the body cavity, particularly to the target tissue within the body cavity. In some embodiments, the locking feature comprises sufficient friction between articulating members so that the members are held in place. In other embodiments, the locking feature comprises a locking mechanism which includes a mechanism for holding at least one of the pullwires in the tensioned position. By holding more pullwires in place, the ability to maintain the arrangement is increased. Therefore, some locking mechanisms will hold all of the pullwires in a tensioned position. Generally, the outer guiding catheter and the inner guiding catheter are separately lockable.

[0030] Although only a few types of curves have been described in relation to the guiding catheters, it may be appreciated that any number of curves or shapes may be formed. In addition, pre-formed curves may also be provided throughout a portion of the catheter which are manipulable with the use of steering mechanisms. Further, any number of curves or shapes may be pre-formed throughout portions of the catheter other than the portion of the catheter which is steerable.

[0031] In a third aspect of the present invention, methods of accessing a body cavity are provided. In some embodiments, the method includes positioning an outer guiding catheter having a proximal end, distal end and central lumen therethrough so that the distal end is at least partially within the body cavity, forming a primary curve in the distal end of the outer guiding catheter, advancing an inner guiding catheter through the central lumen of the outer guiding catheter and forming a secondary curve in the inner guiding catheter which differs from the primary curve. As mentioned previously, the primary curve and secondary curves may lie in different planes, particularly in substantially orthogonal planes. Further, the inner guiding catheter may be moved through an angle theta. Often the secondary curve and the angle theta lie in different planes and sometimes in substantially orthogonal planes. And, the primary curve, secondary cure and angle theta may each lie in different planes, such as substantially orthogonal planes. In other embodiments, the method further includes forming an additional curve in the outer guiding catheter. Again, the additional curve and the primary curve may lie in different planes, such as substantially orthogonal planes.

[0032] The methods of the present invention include forming the curves by a variety of methods. In some embodiments, forming the curve is achieved by allowing the guiding catheter to resume a shape memory configuration. Alternatively or in addition, in some embodiments, forming the curve is achieved by actuating a steering mechanism. When the steering mechanism comprises at least one pullwire, actuation of the steering mechanism comprises applying tension to the at least one pullwire.

[0033] The multi-catheter guiding system may be used to access any suitable body cavity. Although the guiding system can be used to access any body cavity through any pathway, such as laparoscopically, thoroscopically, endoscopically or percutaneously, the system may be particularly useful for accessing one or more chambers of the heart. The chambers of the heart provide access to many tissues which may be targeted for treatment, such as valves, chordae tendinae, papillary muscles, the Purkinje system and coronary arteries, to name a few. When targeting the mitral valve, the left atrium may be accessed to approach the valve from above. To accomplish this, the system may be advanced through the vasculature to the right atrium and passed through the intra-atrial septum to the left atrium. It may be appreciated that the mitral valve may alternatively be approached from below or from the ventricular side by accessing the left ventricle. This is typically achieved by advancing the system through the vasculature to the aorta and into the left ventricle. By any approach, combination of the curvatures of the outer guide catheter and the inner guide catheters direct the distal end the multi-catheter guiding system toward the target tissue, in this example the mitral valve. A catheter or device may then be passed through the central lumen of the inner guiding catheter toward the mitral valve for desired repair of the valve.

[0034] As described previously, the multi-catheter guiding system may include any number of curves or shapes to properly direct the system toward the target tissue. When targeting the mitral valve via the right atrium, the distal end of the system extends into the open space of the right atrium. To direct the distal tip of the system toward the mitral valve, the distal tip may be moved laterally, vertically, or angularly, to name a few, as described above. For example, the outer guiding catheter may include a primary curve in a primary plane parallel to the valve surface. This moves its distal tip laterally in relation to the valve. The inner guiding catheter is positioned at least partially within the outer guiding catheter and has a secondary curve in a secondary plane; typically the secondary plane is different from the primary plane and optionally substantially orthogonal to the primary plane. This moves its distal tip vertically and angularly, directing its central lumen toward or away from the valve along the secondary plane. The inner guiding catheter may further include positioning through an angle theta. This moves the distal end of the inner guiding catheter vertically and angularly through a plane which differs from the secondary plane. Consequently, its central lumen can be directed toward or away from the valve along a theta plane which is different than the secondary plane and the primary plane. Thus, curvature of the guiding system, due to pre-curvatures and/or steering, directs the guiding system

toward the target tissue. Such control is useful for targeting various tissues from various approaches through variable anatomy.

[0035] It may be appreciated that the multi-catheter guiding system may alternatively comprise an outer guiding catheter and an inner guiding catheter as described above, however wherein the inner guiding catheter further comprises a built-in device for delivery to the target tissue. In such embodiments, the outer guiding catheter has the same form and function as described above. And, again, the inner guiding catheter is positionable at least partially within the central lumen of the outer guiding catheter so that the distal end of the inner guiding catheter extends beyond the distal end of the outer guiding catheter. The inner guiding catheter is capable of performing the same curvatures as described above. However, rather than having a central lumen for passing through tools and devices, the inner guiding catheter has a tool or device disposed at its distal end.

[0036] In addition, the invention provides devices, systems and methods for tissue approximation and repair at treatment sites. The devices, systems and methods of the invention will find use in a variety of therapeutic procedures, including endovascular, minimally-invasive, and open surgical procedures, and can be used in various anatomical regions, including the abdomen, thorax, cardiovascular system, heart, intestinal tract, stomach, urinary tract, bladder, lung, and other organs, vessels, and tissues. The invention is particularly useful in those procedures requiring minimally-invasive or endovascular access to remote tissue locations, where the instruments utilized must negotiate long, narrow, and tortuous pathways to the treatment site. In addition, many of the devices and systems of the invention are adapted to be reversible and removable from the patient at any point without interference with or trauma to internal tissues.

[0037] In preferred embodiments, the devices, systems and methods of the invention are adapted for fixation of tissue at a treatment site. Exemplary tissue fixation applications include cardiac valve repair, septal defect repair, vascular ligation and clamping, laceration repair and wound closure, but the invention may find use in a wide variety of tissue approximation and repair procedures. In a particularly preferred embodiment, the devices, systems and methods of the invention are adapted for repair of cardiac valves, and particularly the mitral valve, as a therapy for regurgitation. The invention enables two or more valve leaflets to be coapted using an "edge-to-edge" or "bow-tie" technique to reduce regurgitation, yet does not require open surgery through the chest and heart wall as in conventional approaches. Using the devices, systems and methods of the invention, the mitral valve can be accessed from a remote surgical or vascular access point and the two valve leaflets may be coapted using endovascular or minimally invasive approaches. While less preferred, in some circumstances the invention may also find application in open surgical approaches as well. According to the invention, the mitral valve may be approached either from the atrial side (antegrade approach) or the ventricular side (retrograde approach), and either through blood vessels or through the heart wall.

[0038] The devices, systems and methods of the invention are centered on variety of devices which may be used individually or in a variety of combinations to form interventional systems. In preferred embodiments, the interventional system includes the multi-catheter guiding system, a delivery catheter and an interventional device. Each of these components will be discussed herein.

[0039] In an exemplary embodiment, the invention provides a fixation device having a pair of distal elements (or fixation elements), each distal element having a free end and an engagement surface for engaging the tissue, wherein the distal elements are moveable between a first position for capturing the tissue and a second position for fixing the tissue. Preferably, the engagement surfaces are spaced apart in the first position and are closer together and generally face toward each other in the second position. The fixation device is preferably delivered to a target location in a patient's body by a delivery catheter having an elongated shaft, a proximal end and a distal end, the delivery catheter being configured to be positioned at the target location from a remote access point such as a vascular puncture or cut-down or a surgical penetration. In a preferred embodiment, the target location is a valve in the heart. Additional aspects of fixation devices usable in the system of the invention are described in copending application Ser. No. _____, Attorney Docket No. 020489-001400US, filed on the same day as the present application, which has been incorporated herein by reference.

[0040] The fixation device is preferably delivered with the distal elements in a delivery position configured to minimize the profile of the device. When approaching the mitral valve from the atrial side, some embodiments of the fixation device allow the device to be delivered with the free ends of the distal elements pointing in a generally proximal direction forming an angle of less than about 90°, preferably less than about 20°, relative to the longitudinal axis of the delivery device shaft. In this position the engagement surfaces are facing generally toward each other, being disposed at an angle of less than about 180°, and preferably less than about 40°, relative to each other. For ventricular approaches, in the delivery position the free ends of the distal elements are pointing in a generally distal direction and form an angle of less than about 90°, preferably less than about 20° relative to the longitudinal axis of the delivery device shaft. In this position, the engagement surfaces are facing generally toward each other, usually being disposed at an angle of less than about 180°, and preferably less than about 90°, relative to each other. Alternatively, in some ventricular approaches, it may be preferred to have the free ends of the fixation elements pointing in a generally proximal direction and the engagement surfaces facing away from each other in the delivery position.

[0041] In order to provide for the reversibility and removability of the devices and systems of the invention, the distal elements preferably are movable to an inverted position that minimizes entanglement and interferences with surrounding tissues should the device be desired to be withdrawn. In mitral repair applications, this is particularly important due to the presence of chordae tendonae, valve leaflets and other tissues with which devices may become entangled. For approaches from the atrial side of the mitral valve, in the inverted position, the free ends will be pointing in a generally distal direction relative to the catheter shaft and the engagement surfaces will be facing generally away from each other, usually being disposed at an angle of more than

about 180°, and preferably more than 270°, relative to each other. For ventricular approaches to the valve, in the inverted position the free ends will be pointing in a distal direction relative to the catheter shaft and the engagement surfaces will be facing generally toward each other, usually being disposed at an angle of less than about 180°, and preferably less than 90°, relative to each other.

[0042] In the open position the engagement surfaces of the distal elements preferably form an angle of up to 180° relative to each other so as to maximize the area in which to capture the valve leaflets or other target tissue. The distal elements are preferably movable to a closed position in which the engagement surfaces engage each other or form an angle as small as 0° relative to each other. The distal elements are configured to be adjusted to and left permanently in any of various positions between the open and closed positions to allow for fixation of tissues of various thickness, geometry, and spacing.

[0043] In a preferred embodiment, the fixation device of the invention will further include at least one proximal element (or gripping element). Each proximal element and distal element will be movable relative to each other and configured to capture tissue between the proximal element and the engagement surface of the distal element. Preferably, the distal elements and proximal elements are independently movable but in some embodiments may be movable with the same mechanism. The proximal element may be preferably biased toward the engagement surface of the fixation element to provide a compressive force against tissue captured therebetween.

[0044] In another aspect, the invention provides a fixation device for engaging tissue comprising a coupling member configured for coupling a catheter and a pair of distal elements connected to the coupling member, each distal element having an engagement surface for engaging the tissue. The distal elements are moveable between an open position wherein the distal elements extend radially outwardly facing the engagement surfaces toward a first direction, and an inverted position wherein the distal elements have rotated away from the first direction facing the engagement surfaces radially outwardly.

[0045] In a further aspect, the distal elements of the invention are adapted to receive a suture passed through the target tissue. For example, implant pledgets may be detachably mounted to the distal elements so as to be positionable against a surface of tissue engaged by the distal elements. A suture may then be passed through the tissue and implant pledget, which are supported by the distal element. The implant pledgets are then detached from the distal elements, which may be withdrawn from the site, and the suture is tensioned and secured to the target tissue. The delivery catheter, in this embodiment, will further include a movable fixation tool or penetration element for penetrating the target tissue and the implant pledget. A suture is coupled to the penetration element and preferably an anchor is attached to the suture. The penetration element is movable relative to the catheter to penetrate the target tissue and the implant pledget, bringing with it the suture and anchor. The anchor is configured to deploy into an expanded configuration so as to securely engage the implant pledget opposite the target tissue, retaining the suture therein. For the mitral valve, an implant pledget and suture may be similarly deployed in both leaflets, and the sutures secured to one another to coapt the leaflets. Thus, in this embodiment, the distal elements are used to deliver implant pledgets and secure them to the target tissue, but are not themselves deployed at the site as in other embodiments. However, following deployment of the implant pledgets and associated sutures, the distal elements must be withdrawn from the body. For this purpose, the distal elements are movable to an inverted position like the embodiments described above to facilitate withdrawing the device without interference or injury to surrounding tissues.

[0046] In some applications such as the repair of the mitral valve, the fixation device is adapted to be detached from the delivery catheter and left permanently in the patient. In such applications, it is often desirable to promote tissue growth around the fixation device. For this purpose, some or all of the components of the fixation device are preferably covered with a covering or coating to promote tissue growth. In one embodiment, a biocompatible fabric cover is positioned over the distal elements and/or the proximal elements. The cover may optionally be impregnated or coated with various therapeutic agents, including tissue growth promoters, antibiotics, anti-clotting, blood thinning, and other agents. Alternatively or in addition, some or all of the fixation element and/or covering may be comprised of a bioerodable, biodegradable or bioabsorbable material so that it may degrade or be absorbed by the body after the repaired tissues have grown together.

[0047] The distal elements and proximal elements will be configured to provide high retention force so that the fixation device remains securely fastened to the target tissue throughout the cardiac cycle. At the same time, the distal and proximal elements will be configured to minimize trauma to the tissue engaged by them. This allows the fixation device to be removed from the tissue after initial application without creating clinically significant injury to the tissue. In order to enhance retention without creating significant trauma, the proximal elements and/or the distal elements may have friction-enhancing features on their surfaces that engage the target tissue. Such friction-enhancing features may include barbs, bumps, grooves, openings, channels, surface roughening, coverings, and coatings, among others. Optionally, magnets may be present in the proximal and/or distal elements. Preferably the friction-enhancing features and the magnets will be configured to increase the retention force of the distal and proximal elements on the tissue, while not leaving significant injury or scarring if the device is removed.

[0048] The distal and proximal elements may further have a shape and flexibility to maximize retention force and minimize trauma to the target tissue. In a preferred embodiment, the engagement surfaces of the distal elements have a concave shape configured to allow the proximal elements, along with the target tissue, to be nested or recessed within the distal elements. This increases the surface area of the tissue engaged by the distal elements and creates a geometry of tissue engagement that has a higher retention force than a planar engagement surface. To minimize trauma, the longitudinal edges as well as the free ends of the distal elements are preferably curved outwardly away from the engagement surface so that these edges present a rounded surface against the target tissue. The distal elements and/or the proximal elements may also be flexible so that they

deflect to some degree in response to forces against the tissue engaged thereby, reducing the chances that the tissue will tear or bruise in response to such forces.

[0049] The fixation device will include an actuation mechanism for moving the distal elements between the open, closed, and inverted positions. A variety of actuation mechanisms may be used. In an exemplary embodiment, a coupling member connects the fixation device to the delivery catheter, and a stud is slidably coupled to the coupling member. In a "push to close/pull to open" embodiment, the distal elements are pivotably coupled to the stud and the actuation mechanism comprises a pair of link members connected between the distal elements and the coupling member, whereby sliding the stud relative to the coupling member pivots the distal elements inwardly or outwardly into the various positions. Alternatively, in a "push to open/pull to close" embodiment, the distal elements are pivotably coupled to the coupling member and the links connected between the distal elements and the stud.

[0050] The fixation device of the invention preferably includes a coupling member that is detachably connectable to the delivery catheter. The coupling member may have various constructions, but in an exemplary embodiment comprises an outer member having an axial channel, the outer member being coupled to one of either the distal elements or the actuation mechanism. An inner member extends slidably through the axial channel and is coupled to the other of either the distal elements or the actuation mechanism. The delivery catheter will be configured to detachably connect to both the inner member and the outer member. In one embodiment, the delivery catheter has a tubular shaft and an actuator rod slidably disposed in the tubular shaft. The junction of the outer member with the tubular shaft comprises a joining line, which may have a variety of shapes including sigmoid curves. The actuator rod extends from the delivery catheter through the axial channel in the outer member to maintain its connection with the tubular shaft. The actuator rod may be connected to the inner member by various connection structures, including threaded connections. By detachment of the actuator rod from the inner member and retraction of the actuator rod back into the tubular shaft, the outer member is released from the tubular shaft to allow deployment of the fixation device.

[0051] In a preferred embodiment, the fixation device further includes a locking mechanism that maintains the distal elements in a selected position relative to each other. Because the ideal degree of closure of the fixation device may not be known until it is actually applied to the target tissue, the locking mechanism is configured to retain the distal elements in position regardless of how open or closed they may be. While a variety of locking mechanisms may be used, in an exemplary embodiment the locking mechanism comprises a wedging element that is movable into frictional engagement with a movable component of the fixation device to prevent further movement of the distal elements. In embodiments utilizing the actuation mechanism described above, the component with which the wedging element engages may be the coupling member or the stud slidably coupled thereto. In one embodiment the stud passes through an aperture in the coupling member that has a sloping sidewall, and the wedging element comprises a barbell disposed between the sidewall and the stud.

[0052] The fixation device preferably also includes an unlocking mechanism for releasing the locking mechanism, allowing the distal elements and proximal elements to move. In one embodiment, the unlocking mechanism comprises a harness coupled to the wedging element of the locking mechanism to reduce frictional engagement with the movable component of the fixation device. In an exemplary embodiment, the harness is slidably coupled to the coupling member and extends around the wedging element of the locking mechanism, whereby the harness can be retracted relative to the coupling member to disengage the wedging element from the stud.

[0053] In a further aspect, the invention provides an interventional system comprising a tubular guide having a proximal end, a distal end and a channel therebetween, the distal end of the tubular guide being deflectable about a first axis; a delivery catheter positionable through the channel, the delivery catheter having a flexible shaft with a proximal end, a distal end, a lumen therebetween, and an actuation element movably disposed in the lumen; and a fixation device having a coupling member releasably coupled to the distal end of the shaft, a first distal element movably coupled to the coupling member, and a first proximal element movable relative to the distal element, the first distal element being releasably coupled to the actuation element and movable therewith, the first distal element and the first proximal element being adapted to engage tissue therebetween.

[0054] The delivery device of the invention is adapted to allow the user to deliver the fixation device to the target site from a remote access point, whether through endovascular or surgical approaches, align the device with the target tissue, and to selectively close, open, invert, lock or unlock the distal element. In some embodiments, the delivery device will have a highly flexible, kink resistant, torsionally stiff shaft with minimal elongation and high compressive strength. The delivery device will also have the movable components and associated actuators to move the distal elements between the open, closed, and inverted positions, to move the proximal elements into engagement with the target tissue, to unlock the locking mechanism, and to detach the distal element from the delivery catheter. In a preferred embodiment, the delivery device comprises a delivery catheter having an elongated shaft which has an inner lumen. The distal end of the shaft is configured for detachable connection to the coupling member of the fixation device. An actuator rod is slidably disposed in the inner lumen and is adapted for detachable coupling to the stud or other component of the fixation device that moves the distal elements. A plurality of tubular guides, preferably in the form of metallic or polymeric coils, extend through the inner lumen of the shaft and are typically fixed to the shaft near its proximal and distal ends but are unrestrained therebetween, providing a highly flexible and kink-resistant construction. Lines for actuating the proximal elements and the unlocking mechanism of the fixation device extend through these tubular guides and are detachably coupled to the proximal element and unlocking mechanisms. These and other aspects of delivery catheters suitable for use in the present invention are described in copending application Ser. No. _____ Attorney Docket No. 020489-001700US, filed on the same day as the present application, which has been incorporated herein by reference.

[0055] The delivery catheter may additionally include a tether that is detachably coupled to a portion of the fixation device for purposes of retrieval of the device following detachment from the delivery catheter. The tether may be a separate flexible filament extending from the delivery catheter to the fixation device, but alternatively may be a line coupled to either the unlocking mechanism or the proximal element and used also for actuating those components. In either case, the tether will be detachable from the fixation device so that it may be detached once the device has been deployed successfully.

[0056] The system of the invention may additionally include a guide that facilitates introduction and navigation of the delivery catheter and fixation device to the target location. The guide is preferably tubular with a channel extending between its proximal and distal ends in which the delivery catheter and fixation device may be slidably positioned. The distal end of the guide is steerable, usually being deflectable about at least one axis, and preferably about two axes. The guide will have a size, material, flexibility and other characteristics suitable for the application in which it is being used. For mitral valve repair, the guide is preferably configured to be introduced in a femoral vein and advanced through the inferior vena cava into the heart, across a penetration in the interatrial septum, and into alignment with the mitral valve in the left atrium. Alternatively, the guide may be configured for introduction in a femoral, axillary, or brachiocephalic artery and advancement through the aorta and aortic valve into the ventricle where it is steered into alignment with the mitral valve. In a further alternative, the guide may be configured for introduction through a puncture or incision in the chest wall and through an incision in the wall of the heart to approach the mitral valve.

[0057] In an exemplary embodiment, the guide comprises the multi-catheter guiding system which has two components, including an inner tubular member or inner guide catheter and an outer tubular member or outer guide catheter. The inner tubular member has a distal end deflectable about a first axis. The outer tubular member has a distal end deflectable about a second axis. Further, the inner tubular member may be rotatable relative to the outer tubular member about its longitudinal axis. Mobility in additional directions and about additional axes may optionally be provided.

[0058] The invention further provides methods of performing therapeutic interventions at a tissue site. In one embodiment, the method includes the steps of advancing an interventional tool having a proximal end, a distal end and a fixation device near the distal end to a location within a patient's body, wherein the fixation device includes a pair of distal elements each having a free end and an engagement surface; moving the distal elements to an open position wherein the free ends are spaced apart; positioning the distal elements such that the engagement surfaces engage tissue at the tissue site; and detaching the fixation device from the interventional tool. Preferably, the method further includes the step of inverting the distal elements to an inverted position wherein the free ends point generally in a distal direction. In some embodiments, the engagement surfaces will face generally away from each other in the inverted position, while in other embodiments, the engagement surfaces will face generally toward each other in the inverted position.

[0059] In an exemplary embodiment, the tissue site comprises first and second leaflets, and the step of moving the distal elements comprises coapting the leaflets. The leaflets may be part of a variety of tissue structures, but are preferably part of a cardiac valve such as the mitral valve. In antegrade approaches, the step of advancing will usually include inserting the fixation device through a valve annulus, e.g. from an atrium of the heart to a ventricle of the heart. In such approaches, the method may further include a step of withdrawing the fixation device through the valve annulus with the fixation device in the inverted position. Retrograde approaches are also provided, in which the step of advancing will include the step of passing the fixation device through a ventricle of the heart into an atrium of the heart. The step of advancing may further comprise transluminally positioning the fixation device through a blood vessel into the heart, and may include inserting the fixation device through an interatrial septum of the heart. Alternatively, the step of advancing may comprise inserting the device through a surgical penetration in a body wall.

[0060] The method may further include moving the distal elements to a closed position after the step of positioning, the free ends of the distal element being closer together in the closed position with the engagement surfaces facing generally toward each other. In addition, the method may include a step of deploying a proximal element on the fixation device toward each engagement surface to as to capture tissue therebetween. Before the step of inverting, the proximal elements are retracted away from the engagement surfaces. The method optionally includes a step of locking the distal elements in a desired position, and may further include a step of unlocking the distal elements so that they are movable again.

[0061] In a further aspect, a method according to the invention comprises advancing a catheter having a proximal end, a distal end and a fixation device near the distal end to a location within a body, wherein the fixation device includes a pair of distal elements each having an engagement surface; moving the distal elements to an open position wherein the distal elements extend radially outwardly facing the engagement surfaces toward a direction other than radially outwardly; and moving the distal elements to an inverted position wherein the engagement surfaces face radially outwardly.

[0062] In still another aspect, the invention provides a method for fixing tissues together comprising advancing a catheter having a proximal end, a distal end and a fixation device disposed near the distal end to a location near the tissues, wherein the fixation device includes a pair of distal elements each having a removable implant pledget; moving the distal elements so that each implant pledget engages one of the tissues; penetrating each tissue and engaged implant pledget and passing a tie therethrough; fastening the ties to fix the tissues together; and removing the fixation device leaving the implant pledget in place.

[0063] In an additional aspect of the invention, kits for performing an intervention at a tissue site in a patient's body include a fixation device and Instructions for Use setting forth the steps of using the fixation device according to the methods of the invention. The fixation device may be as described in any of the various examples set forth herein. The kits may further include a delivery tool or catheter for

delivering the fixation device to the tissue site, as well as a tubular guide through which the delivery tool or catheter may be positioned.

[0064] Other objects and advantages of the present invention will become apparent from the detailed description to follow, together with the accompanying drawings.

BRIEF DESCRIPTION OF THE DRAWINGS

[0065] **FIG. 1** illustrates the left ventricle and left atrium of the heart during systole.

[0066] **FIG. 2A** illustrates free edges of leaflets in normal coaptation, and **FIG. 2B** illustrates the free edges in regurgitative coaptation.

[0067] FIGS. **3A-3C** illustrate grasping of the leaflets with a fixation device, inversion of the distal elements of the fixation device and removal of the fixation device, respectively.

[0068] **FIG. 4** illustrates the position of the fixation device in a desired orientation relative to the leaflets.

[0069] FIGS. **5A-5B**, **6A-6B** illustrate exemplary embodiments of coupling mechanisms of the instant application.

[0070] FIGS. **7A-7D** illustrate an embodiment of a fixation device in various positions.

[0071] FIGS. **8A-8B** illustrate an embodiment of the fixation device wherein some or all of the components are molded as one part.

[0072] **FIG. 9** illustrates another embodiment of the fixation device of the present invention.

[0073] FIGS. **10A-10B**, **11A-11B**, **12A-12B**, **13A-13B**, **14-16** illustrate embodiments of a fixation device in various possible positions during introduction and placement of the device within the body to perform a therapeutic procedure.

[0074] FIGS. **17A-17C** illustrate a covering on the fixation device wherein the device is in various positions.

[0075] **FIG. 18** illustrates an embodiment of the fixation device including proximal elements and a locking mechanism.

[0076] **FIG. 19** provides a cross-sectional view of the locking mechanism of **FIG. 18**.

[0077] FIGS. **20-21** provide a cross-sectional view of the locking mechanism in the unlocked and locked positions respectively.

[0078] FIGS. **22A-22B** illustrate a variation of the fixation device to facilitate capture of more widely-separated leaflets or other tissue flaps.

[0079] FIGS. **23**, **24A-24B** illustrate another embodiment of a locking mechanism.

[0080] FIGS. **25**, **26A-26B** illustrate yet another embodiment of a locking mechanism.

[0081] FIGS. **27-28** illustrate an additional embodiment of the fixation device wherein separation of couplers rotate the distal elements around pins.

[0082] FIGS. **29-30** illustrate the fixation device of FIGS. **27-28** with additional features such as barbs and bumpers.

[0083] **FIG. 31** illustrates an embodiment of the fixation device having engagement surfaces with a serrated edge and wherein the fixation device is mounted for a ventricular approach to a mitral valve.

[0084] FIGS. **32-34** illustrate an additional embodiment of the fixation device which allows tissue to be grasped between the distal elements and the proximal elements while in an arrangement wherein the distal elements are parallel to each other.

[0085] FIGS. **35-39**, **40A-40D**, **41-42**, **43A-43C** illustrate another embodiment of the fixation device wherein the fixation device includes distal elements having implant pledgets.

[0086] FIGS. **44A-44B**, **45-46** illustrate another embodiment of the fixation device wherein the distal elements are comprised of a semi-rigid material having a folded shape.

[0087] **FIG. 47** is a perspective view of an embodiment of a delivery catheter for a fixation device.

[0088] **FIG. 48** illustrates an embodiment of a fixation device coupled to the distal end of a delivery catheter.

[0089] **FIG. 49** illustrates a portion of the shaft of a delivery catheter and a fixation device which is coupleable with the catheter.

[0090] FIGS. **50-52** are cross-sectional views of embodiments of the shaft of the delivery catheter.

[0091] FIGS. **52A-52B** illustrate embodiments of the nose of the shaft of the delivery catheter.

[0092] FIGS. **53A-53C** illustrate various arrangements of lock lines engaging release harnesses of a locking mechanism.

[0093] FIGS. **54A-54B** illustrate various arrangements of proximal element lines engaging proximal elements of a fixation device.

[0094] **FIG. 55** illustrates an embodiment of the handle of the delivery catheter.

[0095] **FIG. 56** is a cross-sectional view of the main body of the handle.

[0096] **FIG. 57** illustrates an embodiment of a lock line handle.

[0097] **FIG. 57A** illustrates the lock line handle of **FIG. 57** positioned within a semi-tube which is disposed within the sealed chamber.

[0098] FIGS. **58A-58B** illustrate a mechanism for applying tension to lock lines.

[0099] FIGS. **59**, **59A-59B** illustrate features of the actuator rod control and handle.

[0100] **FIG. 60** is a perspective view of an embodiment of a multi-catheter guiding system of the present invention, and an interventional catheter positioned therethrough.

[0101] **FIG. 61A** illustrates a primary curvature in an outer guide catheter.

[0102] **FIG. 61B** illustrates a secondary curvature in an inner guide catheter.

[0103] FIGS. **61**C-**61**D illustrate example movement of an inner guide catheter through angle thetas.

[0104] **FIG. 62A** is a perspective side view of a multi-catheter guiding system having an additional curve in the outer guide catheter.

[0105] **FIG. 62B** illustrates lifting of the outer guide catheter due to the additional curve of **FIG. 62A**.

[0106] FIGS. **63**A-**63**D illustrate a method of using the multi-catheter guiding system for accessing the mitral valve.

[0107] FIGS. **64**A-**64**D illustrate curvature of a guide catheter of the present invention by the actuation of one or more pullwires.

[0108] **FIG. 64E** illustrates attachment of a pullwire to a tip ring.

[0109] FIGS. **65**A-**65**I illustrate embodiments of the present invention comprising sections constructed with the inclusion of braiding or coil.

[0110] FIGS. **66**A-**66**C illustrate a keying feature of the present invention.

[0111] FIGS. **67**A-**67**B are perspective views of a guide catheter including a series of articulating members.

[0112] **FIG. 68** illustrates embodiments of the handles.

[0113] **FIG. 69** illustrates the handles of **FIG. 68** with a portion of the housing removed.

[0114] **FIG. 70** illustrates steering mechanisms within a handle.

[0115] **FIG. 71** illustrates attachment of a pullwire to a disk.

[0116] FIGS. **72**A-**72**B illustrate a hard stop peg restricting rotation of a disk.

[0117] FIGS. **73**A-**73**C illustrates a portion of a hard stop gear assembly.

[0118] FIGS. **74**A-**74**F illustrate a ball restricting rotation of a disk.

[0119] **FIG. 75** illustrates an embodiment of a friction assembly.

[0120] **FIG. 76** illustrates an embodiment of an interventional system of the present invention.

[0121] **FIG. 76A** illustrates an embodiment of a hemostatic valve for use with the present invention.

[0122] **FIG. 76B** illustrates an embodiment of a fixation device introducer.

[0123] **FIG. 77** illustrates another embodiment of an interventional system of the present invention.

[0124] FIGS. **78-80** illustrate an embodiment of a stabilizer base for use with the present invention.

[0125] **FIG. 81** illustrates a kit constructed in accordance with the principles of the present invention

DETAILED DESCRIPTION OF THE INVENTION

[0126] I. Cardiac Physiology

[0127] The left ventricle LV of a normal heart H in systole is illustrated in **FIG. 1**. The left ventricle LV is contracting and blood flows outwardly through the tricuspid (aortic) valve AV in the direction of the arrows. Back flow of blood or "regurgitation" through the mitral valve MV is prevented since the mitral valve is configured as a "check valve" which prevents back flow when pressure in the left ventricle is higher than that in the left atrium LA. The mitral valve MV comprises a pair of leaflets having free edges FE which meet evenly to close, as illustrated in **FIG. 1**. The opposite ends of the leaflets LF are attached to the surrounding heart structure along an annular region referred to as the annulus AN. The free edges FE of the leaflets LF are secured to the lower portions of the left ventricle LV through chordae tendinae CT (referred to hereinafter as the chordae) which include plurality of branching tendons secured over the lower surfaces of each of the valve leaflets LF. The chordae CT in turn, are attached to the papillary muscles PM which extend upwardly from the lower portions of the left ventricle and intraventricular septum IVS.

[0128] A number of structural defects in the heart can cause mitral valve regurgitation. Regurgitation occurs when the valve leaflets do not close properly allowing leakage from the ventricle into the atrium. As shown in **FIG. 2**A, the free edges of the anterior and posterior leaflets normally meet along a line of coaptation C. An example of a defect causing regurgitation is shown in **FIG. 2B**. Here an enlargement of the heart causes the mitral annulus to become enlarged, making it impossible for the free edges FE to meet during systole. This results in a gap G which allows blood to leak through the valve during ventricular systole. Ruptured or elongated chordae can also cause a valve leaflet to prolapse since inadequate tension is transmitted to the leaflet via the chordae. While the other leaflet maintains a normal profile, the two valve leaflets do not properly meet and leakage from the left ventricle into the left atrium will occur. Such regurgitation can also occur in patients who have suffered ischemic heart disease where the left ventricle does not contract sufficiently to effect proper closure.

[0129] II. General Overview

[0130] The present invention provides methods and devices for grasping, approximating and fixating tissues such as valve leaflets to treat cardiac valve regurgitation, particularly mitral valve regurgitation. The present invention also provides features that allow repositioning and removal of the device if so desired, particularly in areas where removal may be hindered by anatomical features such as chordae CT. Such removal would allow the surgeon to reapproach the valve in a new manner if so desired.

[0131] Grasping will preferably be atraumatic providing a number of benefits. By atraumatic, it is meant that the devices and methods of the invention may be applied to the valve leaflets and then removed without causing any significant clinical impairment of leaflet structure or function. The leaflets and valve continue to function substantially the same as before the invention was applied. Thus, some minor penetration or denting of the leaflets may occur using the invention while still meeting the definition of "atraumatic".

This enables the devices of the invention to be applied to a diseased valve and, if desired, removed or repositioned without having negatively affected valve function. In addition, it will be understood that in some cases it may be necessary or desirable to pierce or otherwise permanently affect the leaflets during either grasping, fixing or both. In some of these cases, grasping and fixation may be accomplished by a single device. Although a number of embodiments are provided to achieve these results, a general overview of the basic features will be presented herein. Such features are not intended to limit the scope of the invention and are presented with the aim of providing a basis for descriptions of individual embodiments presented later in the application.

[**0132**] The devices and methods of the invention rely upon the use of an interventional tool that is positioned near a desired treatment site and used to grasp the target tissue. In endovascular applications, the interventional tool is typically an interventional catheter. In surgical applications, the interventional tool is typically an interventional instrument. In preferred embodiments, fixation of the grasped tissue is accomplished by maintaining grasping with a portion of the interventional tool which is left behind as an implant. While the invention may have a variety of applications for tissue approximation and fixation throughout the body, it is particularly well adapted for the repair of valves, especially cardiac valves such as the mitral valve. Referring to **FIG. 3**A, an interventional tool **10**, having a delivery device, such as a shaft **12**, and a fixation device **14**, is illustrated having approached the mitral valve MV from the atrial side and grasped the leaflets LF. The mitral valve may be accessed either surgically or by using endovascular techniques, and either by a retrograde approach through the ventricle or by an antegrade approach through the atrium, as described above. For illustration purposes, an antegrade approach is described.

[**0133**] The fixation device **14** is releasably attached to the shaft **12** of the interventional tool **10** at its distal end. When describing the devices of the invention herein, "proximal" shall mean the direction toward the end of the device to be manipulated by the user outside the patient's body, and "distal" shall mean the direction toward the working end of the device that is positioned at the treatment site and away from the user. With respect to the mitral valve, proximal shall refer to the atrial or upstream side of the valve leaflets and distal shall refer to the ventricular or downstream side of the valve leaflets.

[**0134**] The fixation device **14** typically comprises proximal elements **16** (or gripping elements) and distal elements **18** (or fixation elements) which protrude radially outward and are positionable on opposite sides of the leaflets LF as shown so as to capture or retain the leaflets therebetween. The proximal elements **16** are preferably comprised of cobalt chromium, nitinol or stainless steel, and the distal elements **18** are preferably comprised of cobalt chromium or stainless steel, however any suitable materials may be used. The fixation device **14** is coupleable to the shaft **12** by a coupling mechanism **17**. The coupling mechanism **17** allows the fixation device **14** to detach and be left behind as an implant to hold the leaflets together in the coapted position.

[**0135**] In some situations, it may be desired to reposition or remove the fixation device **14** after the proximal elements **16**, distal elements **18**, or both have been deployed to capture the leaflets LF. Such repositioning or removal may be desired for a variety of reasons, such as to reapproach the valve in an attempt to achieve better valve function, more optimal positioning of the device **14** on the leaflets, better purchase on the leaflets, to detangle the device **14** from surrounding tissue such as chordae, to exchange the device **14** with one having a different design, or to abort the fixation procedure, to name a few. To facilitate repositioning or removal of the fixation device **14** the distal elements **18** are releasable and optionally invertible to a configuration suitable for withdrawal of the device **14** from the valve without tangling or interfering with or damaging the chordae, leaflets or other tissue. **FIG. 3B** illustrates inversion wherein the distal elements **18** are moveable in the direction of arrows **40** to an inverted position. Likewise, the proximal elements **16** may be raised, if desired. In the inverted position, the device **14** may be repositioned to a desired orientation wherein the distal elements may then be reverted to a grasping position against the leaflets as in **FIG. 3A**. Alternatively, the fixation device **14** may be withdrawn (indicated by arrow **42**) from the leaflets as shown in **FIG. 3C**. Such inversion reduces trauma to the leaflets and minimizes any entanglement of the device with surrounding tissues. Once the device **14** has been withdrawn through the valve leaflets, the proximal and distal elements may be moved to a closed position or configuration suitable for removal from the body or for reinsertion through the mitral valve.

[**0136**] **FIG. 4** illustrates the position of the fixation device **14** in a desired orientation in relation to the leaflets LF. This is a short-axis view of the mitral valve MV from the atrial side, therefore, the proximal elements **16** are shown in solid line and the distal elements **18** are shown in dashed line. The proximal and distal elements **16**, **18** are positioned to be substantially perpendicular to the line of coaptation C. The device **14** may be moved roughly along the line of coaptation to the location of regurgitation. The leaflets LF are held in place so that during diastole, as shown in **FIG. 4**, the leaflets LF remain in position between the elements **16**, **18** surrounded by openings **0** which result from the diastolic pressure gradient. Advantageously, leaflets LF are coapted such that their proximal or upstream surfaces are facing each other in a vertical orientation, parallel to the direction of blood flow through mitral valve MV. The upstream surfaces may be brought together so as to be in contact with one another or may be held slightly apart, but will preferably be maintained in the vertical orientation in which the upstream surfaces face each other at the point of coaptation. This simulates the double orifice geometry of a standard surgical bow-tie repair. Color Doppler echo will show if the regurgitation of the valve has been reduced. If the resulting mitral flow pattern is satisfactory, the leaflets may be fixed together in this orientation. If the resulting color Doppler image shows insufficient improvement in mitral regurgitation, the interventional tool **10** may be repositioned. This may be repeated until an optimal result is produced wherein the leaflets LF are held in place.

[**0137**] Once the leaflets are coapted in the desired arrangement, the fixation device **14** is then detached from the shaft **12** and left behind as an implant to hold the leaflets together in the coapted position. As mentioned previously, the fixation device **14** is coupled to the shaft **12** by a coupling mechanism **17**. FIGS. **5**A-**5**B, **6**A-**6**B illustrate exemplary embodiments of such coupling mechanisms. **FIG. 5A** shows

an upper shaft **20** and a detachable lower shaft **22** which are interlocked at a joining line or mating surface **24**. The mating surface **24** may have any shape or curvature which will allow or facilitate interlocking and later detachment. A snuggly fitting outer sheath **26** is positioned over the shafts **20**, **22** to cover the mating surface **24** as shown. **FIG. 5B** illustrates detachment of the lower shaft **22** from the upper shaft **20**. This is achieved by retracting the outer sheath **26**, so that the mating surface **24** is exposed, which allows the shafts **20**, **22** to separate.

[**0138**] Similarly, **FIG. 6A** illustrates a tubular upper shaft **28** and a detachable tubular lower shaft **30** which are interlocked at a mating surface **32**. Again, the mating surface **32** may have any shape or curvature which will allow or facilitate interlocking and later detachment. The tubular upper shaft **28** and tubular lower shaft **30** form an outer member having an axial channel. A snuggly fitting rod **34** or inner member is inserted through the tubular shafts **28**, **30** to bridge the mating surface **32** as shown. **FIG. 6B** illustrates detachment of the lower shaft **30** from the upper shaft **28**. This is achieved by retracting the rod **34** to a position above the mating surface **32** which in turn allows the shafts **28**, **30** to separate. Other examples of coupling mechanisms are described and illustrated in copending U.S. patent application Ser. No. 09/894,493 (Attorney Docket No. 020489-000400), incorporated herein by reference for all purposes.

[**0139**] In a preferred embodiment, mating surface **24** (or mating surface **32**) is a sigmoid curve defining a male element and female element on upper shaft **20** (or upper shaft **28**) which interlock respectively with corresponding female and male elements on lower shaft **22** (or lower shaft **30**). Typically, the lower shaft is the coupling mechanism **17** of the fixation device **14**. Therefore, the shape of the mating surface selected will preferably provide at least some mating surfaces transverse to the axial axis of the a mechanism **19** to facilitate application of compressive and tensile forces through the coupling mechanism **17** to the fixation device **14**, yet causing minimal interference when the fixation device **14** is to be released from the upper shaft.

[**0140**] III. Fixation Device

[**0141**] A. Introduction and Placement of Fixation Device

[**0142**] The fixation device **14** is delivered to the valve or the desired tissues with the use of a delivery device. The delivery device may be rigid or flexible depending on the application. For endovascular applications, the delivery device comprises a flexible delivery catheter which will be described in later sections. Typically, however, such a catheter comprises a shaft, having a proximal end and a distal end, and a fixation device releasably attached to its distal end. The shaft is usually elongate and flexible, suitable for intravascular introduction. Alternatively, the delivery device may comprise a shorter and less flexible interventional instrument which may be used for trans-thoracic surgical introduction through the wall of the heart, although some flexibility and a minimal profile will generally be desirable. A fixation device is releasably coupleable with the delivery device as illustrated in **FIG. 3A**. The fixation device may have a variety of forms, a few embodiments of which will be described herein.

[**0143**] FIGS. **7A-7D** illustrate an embodiment of a fixation device **14** in various positions or configurations. **FIG. 7A** illustrates the fixation device **14** in a closed configuration for delivery through the patient's vasculature and, in this example, through the mitral valve. The fixation device **14** includes a coupling member **19** which allows detachment of the fixation device **14** for implantation. In this example, the coupling member **19** is shown to include the lower shaft **22** and mating surface **24** of FIGS. **5A-5B**, and therefore the coupling member **19** would function similarly as described above. The fixation device **14** also includes a pair of opposed distal elements **18**, each distal element **18** having an engagement surface **50** facing inwardly toward the opposed distal element **18** in the closed configuration. Distal elements **18** preferably comprise elongate arms **53**, each arm having a proximal end **52** rotatably connected to the coupling member **19** and a free end **54**. Suitable connections for arms **53** to coupling member **19** include pins, living hinges, or other known rotational connection mechanisms. In the closed configuration of **FIG. 7A**, free ends **54** point in a first direction such that the arms **53** and engagement surfaces **50** are nearly parallel to each other and to an axis **21**, and preferably are angled slightly inwardly toward each other. In a preferred embodiment, when tissue is not present between arms **53**, the arms **53** may be closed until free ends **54** either touch each other or engage shaft **12** when fixation device **14** is attached thereto, thereby minimizing the profile of the fixation device **14** for passage through a delivery device.

[**0144**] FIGS. **7B-7C** illustrate the fixation device **14** in an open position wherein the engagement surfaces **50** are disposed at a separation angle **56** apart, wherein the separation angle **56** is typically up to approximately 180 degrees, preferably up to 90-180 degrees, and arms **53** are disposed generally symmetrically relative to axis **21**. The arms **53** may be moveable to the open position by a variety of actuation mechanisms. For example, a plunger or actuator rod may be advanced through the coupling member **19**, as indicated by arrow **62**, so as to engage a spring or spring loaded actuation mechanism **58** which is attached to the distal elements **18**. By exerting a force against the actuation mechanism **58**, the distal elements **18** are rotated relative to coupling member **19**. The distal elements **18** may be held in this open position by the actuator rod against the resistance provided by the spring of the actuation mechanism **58** which biases the distal elements **18** toward the closed position of **FIG. 7A** when the distal elements **18** are less than 180 degrees apart. The spring loading of the actuation mechanism **58** resists outward movement of the actuation mechanism **58** and urges the device **14** towards the closed position.

[**0145**] In this embodiment, proximal elements **16** comprise resilient loop-shaped wire forms biased outwardly and attached to the coupling member **19** so as to be biased to an open position shown in **FIG. 7C** but moveable rotationally inwardly when arms **53** are closed. The wire forms may be flexible enough to be rigidly attached to coupling member **19** and resiliently deflectable inwardly, or they may be attached by a rotational coupling such as a pin or living hinge. In use, leaflets LF are positioned between the proximal elements **16** and distal elements **18**. Once, the leaflets LF are positioned between the proximal and distal elements **16**, **18**, the distal elements **18** may be closed, compressing the leaflets between engagement surfaces **50** and proximal elements **18**. Depending upon the thickness of the leaflets, the arrangements of the leaflets, the position of the fixation device on the leaflets and other factors, the arms **53** may be maintained in the open position of **FIG. 7B**, moved to the

fully closed position of **FIG. 7A**, or placed in any of various positions in between so as to coapt the leaflets LF and hold them in the desired position with the desired degree of force. In any case, the fixation device **14** will remain in place as an implant following detachment from the delivery catheter.

[**0146**] In some situations, as previously mentioned, it may be desirable to reopen the fixation device **14** following initial placement. To reopen the device **14**, the actuator rod may be readvanced or reinserted through the coupling member **19** and readvanced to press against the actuation mechanism **58**, as previously indicated by arrow **62** in **FIG. 7B**. Again, such advancement applies a force against the actuation mechanism **58** in the manner described above thus moving arms **53** outwardly to release force against leaflets and move engagement surfaces **50** away from proximal elements **16**. The leaflets are then free to move relative to fixation device **14**. The fixation device **14** may then be repositioned as desired and the actuator rod retracted to reclose the distal elements **18** to coapt the leaflets.

[**0147**] Under some circumstances, it may be further desirable to withdraw the fixation device **14** back through the valve or completely from the patient following initial insertion through the valve. Should this be attempted with the clip in the closed or open positions illustrated in FIGS. **7A-7C**, there may be a risk that arms **53** could interfere or become entangled with the chordae, leaflets or other tissues. To avoid this, the fixation element **14** is preferably adapted for inversion of arms **53** so that free ends **54** point in a second direction, opposite to the first direction in which the free ends **54** pointed in the closed position, each arm **53** forming an obtuse angle relative to axis **21** as illustrated in **FIG. 7D**. The arms **53** may be rotated so that the engagement surfaces **50** are disposed at a separation angle **56** of up to 360 degrees, and preferably at least up to 270 degrees. This may be accomplished by exerting a force against actuation mechanism **58** with a push rod or plunger extending through coupling member **19** as described above. In this embodiment, once the distal elements **18** have rotated beyond 180 degrees apart, the spring loading of the actuation mechanism **58** biases the distal elements **18** toward the inverted position. The spring loading of the actuation mechanism **58** resists outward movement of the actuation mechanism **58** and urges the device **14** towards the inverted position.

[**0148**] With arms **53** in the inverted position, engagement surfaces **50** provide an atraumatic surface deflect tissues as the fixation device is withdrawn. This allows the device to be retracted back through the valve annulus without risk of injury to valvular and other tissues. In some cases, once the fixation device **14** has been pulled back through the valve, it will be desirable to return the device to the closed position for withdrawal of the device from the body (either through the vasculature or through a surgical opening).

[**0149**] The embodiment illustrated in FIGS. **7A-7D** is assembled from separate components composed of biocompatible materials. The components may be formed from the same or different materials, including but not limited to stainless steel or other metals, Elgiloyg, nitinol, titanium, tantalum, metal alloys or polymers. Additionally, some or all of these components may be made of bioabsorbable materials that will be absorbed by surrounding tissues or will dissolve into the bloodstream following implantation. It has been found that in mitral valve repair applications the fixation devices of the invention are completely surrounded by tissue within a few months of implantation, after which the devices could dissolve or be absorbed without negative impact to the repair.

[**0150**] In a further embodiment, some or all of the components may be molded as one part, as illustrated in FIGS. **8A-8B**. Here, the coupling member **19**, distal elements **18** and actuation mechanism **58** of the fixation device **14** are all molded from a polymer material as one moveable piece. **FIG. 8A** shows the fixation device **14** in the open position. Advancement of an actuator rod **64** rotates the distal elements **18** relative to the coupling member **19** by a living hinge or by elastic deformation of the plastic at the point of connection between the elements **18** and the coupling member **19**. Typically, this point of connection comprises a thinner segment of polymer to facilitate such bending. Likewise, the actuation mechanism **58** coupled to the distal elements **18** in the same manner. **FIG. 8B** shows the fixation device **14** in the inverted position.

[**0151**] **FIG. 9** illustrates another embodiment of a fixation device **14**. Here, the fixation device **14** is shown coupled to a shaft **12** to form an interventional tool **10**. The fixation device **14** includes a coupling member **19** and a pair of opposed distal elements **18**. The distal elements **18** comprise elongate arms **53**, each arm having a proximal end **52** rotatably connected to the coupling member **19** and a free end **54**. The free ends **54** have a rounded shape to minimize interference with and trauma to surrounding tissue structures. Preferably, each free end **54** defines a curvature about two axes, one being an axis **66** perpendicular to longitudinal axis of arms **53**. Thus, the engagement surfaces **50** have a cupped or concave shape to surface area in contact with tissue and to assist in grasping and holding the valve leaflets. This further allows arms **53** to nest around the shaft **12** in the closed position to minimize the profile of the device. Preferably, arms **53** are at least partially cupped or curved inwardly about their longitudinal axes **66**. Also, preferably, each free end **54** defines a curvature about an axis **67** perpendicular to axis **66** or the longitudinal axis of arms **53**. This curvature is a reverse curvature along the most distal portion of the free end **54**. Likewise, the longitudinal edges of the free ends **54** may flare outwardly. Both the reverse curvature and flaring minimize trauma to the tissue engaged therewith.

[**0152**] In a preferred embodiment suitable for mitral valve repair, the transverse width across engagement surfaces **50** (which determines the width of tissue engaged) is at least about 2 mm, usually 3-10 mm, and preferably about 4-6 mm. In some situations, a wider engagement is desired wherein the engagement surfaces **50** are larger, for example about 2 cm, or multiple fixation devices are used adjacent to each other. Arms **53** and engagement surfaces **50** are configured to engage a length of tissue of about 4-10 mm, and preferably about 6-8 mm along the longitudinal axis of arms **53**. Arms **53** further include a plurality of openings to enhance grip and to promote tissue ingrowth following implantation.

[**0153**] The valve leaflets are grasped between the distal elements **18** and proximal elements **16**. In some embodiments, the proximal elements **16** are flexible, resilient, and cantilevered from coupling member **19**. The proximal elements are preferably resiliently biased toward the distal elements. Each proximal element **16** is shaped and posi-

tioned to be at least partially recessed within the concavity of the distal element **18** when no tissue is present. When the fixation device **14** is in the open position, the proximal elements **16** are shaped such that each proximal element **16** is separated from the engagement surface **50** near the proximal end **52** of arm **53** and slopes toward the engagement surface **50** near the free end **54** with the free end of the proximal element contacting engagement surface **50**, as illustrated in **FIG. 9**. This shape of the proximal elements **16** accommodates valve leaflets or other tissues of varying thicknesses.

[**0154**] Proximal elements **16** include a plurality of openings **63** and scalloped side edges **61** to increase grip on tissue. The proximal elements **16** optionally include frictional accessories, frictional features or grip-enhancing elements to assist in grasping and/or holding the leaflets. In preferred embodiments, the frictional accessories comprise barbs **60** having tapering pointed tips extending toward engagement surfaces **50**. It may be appreciated that any suitable frictional accessories may be used, such as prongs, windings, bands, barbs, grooves, channels, bumps, surface roughening, sintering, high-friction pads, coverings, coatings or a combination of these. Optionally, magnets may be present in the proximal **34**. and/or distal elements. It may be appreciated that the mating surfaces will be made from or will include material of opposite magnetic charge to cause attraction by magnetic force. For example, the proximal elements and distal elements may each include magnetic material of opposite charge so that tissue is held under constant compression between the proximal and distal elements to facilitate faster healing and ingrowth of tissue. Also, the magnetic force may be used to draw the proximal elements **16** toward the distal elements **18**, in addition to or alternatively to biasing of the proximal elements toward the distal elements. This may assist in deployment of the proximal elements **16**. In another example, the distal elements **18** each include magnetic material of opposite charge so that tissue positioned between the distal elements **18** is held therebetween by magnetic force.

[**0155**] The proximal elements **16** may be covered with a fabric or other flexible material as described below to enhance grip and tissue ingrowth following implantation. Preferably, when fabrics or coverings are used in combination with barbs or other frictional features, such features will protrude through such fabric or other covering so as to contact any tissue engaged by proximal elements **16**.

[**0156**] In an exemplary embodiment, proximal elements **16** are formed from metallic sheet of a spring-like material using a stamping operation which creates openings **63**, scalloped edges **61** and barbs **60**. Alternatively, proximal elements **16** could be comprised of a spring-like material or molded from a biocompatible polymer. It should be noted that while some types of frictional accessories that can be used in the present invention may permanently alter or cause some trauma to the tissue engaged thereby, in a preferred embodiment, the frictional accessories will be atraumatic and will not injure or otherwise affect the tissue in a clinically significant way. For example, in the case of barbs **60**, it has been demonstrated that following engagement of mitral valve leaflets by fixation device **14**, should the device later be removed during the procedure barbs **60** leave no significant permanent scarring or other impairment of the leaflet tissue and are thus considered atraumatic.

[**0157**] The fixation device **14** also includes an actuation mechanism **58**. In this embodiment, the actuation mechanism **58** comprises two link members or legs **68**, each leg **68** having a first end **70** which is rotatably joined with one of the distal elements **18** at a riveted joint **76** and a second end **72** which is rotatably joined with a stud **74**. The legs **68** are preferably comprised of a rigid or semi-rigid metal or polymer such as Elgiloy®, cobalt chromium or stainless steel, however any suitable material may be used. While in the embodiment illustrated both legs **68** are pinned to stud **74** by a single rivet **78**, it may be appreciated, however, that each leg **68** may be individually attached to the stud **74** by a separate rivet or pin. The stud **74** is joinable with an actuator rod **64** (not shown) which extends through the shaft **12** and is axially extendable and retractable to move the stud **74** and therefore the legs **68** which rotate the distal elements **18** between closed, open and inverted positions. Likewise, immobilization of the stud **74** holds the legs **68** in place and therefore holds the distal elements **18** in a desired position. The stud **74** may also be locked in place by a locking feature which will be further described in later sections.

[**0158**] In any of the embodiments of fixation device **14** disclosed herein, it may be desirable to provide some mobility or flexibility in distal elements **18** and/or proximal elements **16** in the closed position to enable these elements to move or flex with the opening or closing of the valve leaflets. This provides shock absorption and thereby reduces force on the leaflets and minimizes the possibility for tearing or other trauma to the leaflets. Such mobility or flexibility may be provided by using a flexible, resilient metal or polymer of appropriate thickness to construct the distal elements **18**. Also, the locking mechanism of the fixation device (described below) may be constructed of flexible materials to allow some slight movement of the proximal and distal elements even when locked. Further, the distal elements **18** can be connected to the coupling mechanism **19** or to actuation mechanism **58** by a mechanism that biases the distal element into the closed position (inwardly) but permits the arms to open slightly in response to forces exerted by the leaflets. For example, rather than being pinned at a single point, these components may be pinned through a slot that allowed a small amount of translation of the pin in response to forces against the arms. A spring is used to bias the pinned component toward one end of the slot.

[**0159**] FIGS. **10A-10B**, **11A-11B**, **12A-12B**, **13A-13B**, and FIGS. **14-16** illustrate embodiments of the fixation device **14** of **FIG. 9** in various possible positions during introduction and placement of the device **14** within the body to perform a therapeutic procedure. **FIG. 10A** illustrates an embodiment of an interventional tool **10** delivered through a catheter **86**. It may be appreciated that the interventional tool **10** may take the form of a catheter, and likewise, the catheter **86** may take the form of a guide catheter or sheath. However, in this example the terms interventional tool **10** and catheter **86** will be used. The interventional tool **10** comprises a fixation device **14** coupled to a shaft **12** and the fixation device **14** is shown in the closed position. **FIG. 10B** illustrates a similar embodiment of the fixation device of **FIG. 10A** in a larger view. In the closed position, the opposed pair of distal elements **18** are positioned so that the engagement surfaces **50** face each other. Each distal element **18** comprises an elongate arm **53** having a cupped or concave shape so that together the arms **53** surround the shaft **12** and optionally contact each other on opposite sides

of the shaft. This provides a low profile for the fixation device **14** which is readily passable through the catheter **86** and through any anatomical structures, such as the mitral valve. In addition, **FIG. 10B** further includes an actuation mechanism **58**. In this embodiment, the actuation mechanism **58** comprises two legs **68** which are each movably coupled to a base **69**. The base **69** is joined with an actuator rod **64** which extends through the shaft **12** and is used to manipulate the fixation device **14**. In some embodiments, the actuator rod **64** attaches directly to the actuation mechanism **58**, particularly the base **69**. However, the actuator rod **64** may alternatively attach to a stud **74** which in turn is attached to the base **69**. In some embodiments, the stud **74** is threaded so that the actuator rod **64** attaches to the stud **74** by a screw-type action. However, the rod **64** and stud **74** may be joined by any mechanism which is releasable to allow the fixation device **14** to be detached from shaft **12**.

[**0160**] FIGS. **11A-11B** illustrate the fixation device **14** in the open position. In the open position, the distal elements **18** are rotated so that the engagement surfaces **50** face a first direction. Distal advancement of the stud **74** relative to coupling member **19** by action of the actuator rod **64** applies force to the distal elements **18** which begin to rotate around joints **76** due to freedom of movement in this direction. Such rotation and movement of the distal elements **18** radially outward causes rotation of the legs **68** about joints **80** so that the legs **68** are directly slightly outwards. The stud **74** may be advanced to any desired distance correlating to a desired separation of the distal elements **18**. In the open position, engagement surfaces **50** are disposed at an acute angle relative to shaft **12**, and are preferably at an angle of between 90 and 180 degrees relative to each other. In one embodiment, in the open position the free ends **54** of arms **53** have a span therebetween of about 10-20 mm, usually about 12-18 mm, and preferably about 14-16 mm.

[**0161**] Proximal elements **16** are typically biased outwardly toward arms **53**. The proximal elements **16** may be moved inwardly toward the shaft **12** and held against the shaft **12** with the aid of proximal element lines **90** which can be in the form of sutures, wires, nitinol wire, rods, cables, polymeric lines, or other suitable structures. The proximal element lines **90** may be connected with the proximal elements **16** by threading the lines **90** in a variety of ways. When the proximal elements **16** have a loop shape, as shown in **FIG. 11A**, the line **90** may pass through the loop and double back. When the proximal elements **16** have an elongate solid shape, as shown in **FIG. 1I** B, the line **90** may pass through one or more of the openings **63** in the element **16**. Further, a line loop **48** may be present on a proximal element **16**, also illustrated in **FIG. 1I** B, through which a proximal element line **90** may pass and double back. Such a line loop **48** may be useful to reduce friction on proximal element line **90** or when the proximal elements **16** are solid or devoid of other loops or openings through which the proximal element lines **90** may attach. A proximal element line **90** may attach to the proximal elements **16** by detachable means which would allow a single line **90** to be attached to a proximal element **16** without doubling back and would allow the single line **90** to be detached directly from the proximal element **16** when desired. Examples of such detachable means include hooks, snares, clips or breakable couplings, to name a few. By applying sufficient tension to the proximal element line **90**, the detachable means may be detached from the proximal element **16** such as by breakage of the coupling. Other mechanisms for detachment may also be used. Similarly, a lock line **92** may be attached and detached from a locking mechanism by similar detachable means.

[**0162**] In the open position, the fixation device **14** can engage the tissue which is to be approximated or treated. The embodiment illustrated in FIGS. **9-11** is adapted for repair of the mitral valve using an antegrade approach from the left atrium. The interventional tool **10** is advanced through the mitral valve from the left atrium to the left ventricle. The distal elements **18** are oriented to be perpendicular to the line of coaptation and then positioned so that the engagement surfaces **50** contact the ventricular surface of the valve leaflets, thereby grasping the leaflets. The proximal elements **16** remain on the atrial side of the valve leaflets so that the leaflets lie between the proximal and distal elements. In this embodiment, the proximal elements **16** have frictional accessories, such as barbs **60** which are directed toward the distal elements **18**. However, neither the proximal elements **16** nor the barbs **60** contact the leaflets at this time.

[**0163**] The interventional tool **10** may be repeatedly manipulated to reposition the fixation device **14** so that the leaflets are properly contacted or grasped at a desired location. Repositioning is achieved with the fixation device in the open position. In some instances, regurgitation may also be checked while the device **14** is in the open position. If regurgitation is not satisfactorily reduced, the device may be repositioned and regurgitation checked again until the desired results are achieved.

[**0164**] It may also be desired to invert the fixation device **14** to aid in repositioning or removal of the fixation device **14**. FIGS. **12A-12B** illustrate the fixation device **14** in the inverted position. By further advancement of stud **74** relative to coupling member **19**, the distal elements **18** are further rotated so that the engagement surfaces **50** face outwardly and free ends **54** point distally, with each arm **53** forming an obtuse angle relative to shaft **12**. The angle between arms **53** is preferably in the range of about 270 to 360 degrees. Further advancement of the stud **74** further rotates the distal elements **18** around joints **76**. This rotation and movement of the distal elements **18** radially outward causes rotation of the legs **68** about joints **80** so that the legs **68** are returned toward their initial position, generally parallel to each other. The stud **74** may be advanced to any desired distance correlating to a desired inversion of the distal elements **18**. Preferably, in the fully inverted position, the span between free ends **54** is no more than about 20 mm, usually less than about 16 mm, and preferably about 12-14 mm. In this illustration, the proximal elements **16** remain positioned against the shaft **12** by exerting tension on the proximal element lines **90**. Thus, a relatively large space may be created between the elements **16**, **18** for repositioning. In addition, the inverted position allows withdrawal of the fixation device **14** through the valve while minimizing trauma to the leaflets. Engagement surfaces **50** provide an atraumatic surface for deflecting tissue as the fixation device is retracted proximally. It should be further noted that barbs **60** are angled slightly in the distal direction (away from the free ends of the proximal elements **16**), reducing the risk that the barbs will catch on or lacerate tissue as the fixation device is withdrawn.

[**0165**] Once the fixation device **14** has been positioned in a desired location against the valve leaflets, the leaflets may

then be captured between the proximal elements **16** and the distal elements **18**. FIGS. **13A-13B** illustrate the fixation device **14** in such a position. Here, the proximal elements **16** are lowered toward the engagement surfaces **50** so that the leaflets are held therebetween. In **FIG. 13B**, the proximal elements **16** are shown to include barbs **60** which may be used to provide atraumatic gripping of the leaflets. Alternatively, larger, more sharply pointed barbs or other penetration structures may be used to pierce the leaflets to more actively assist in holding them in place. This position is similar to the open position of FIGS. **11A-11B**, however the proximal elements **16** are now lowered toward arms **53** by releasing tension on proximal element lines **90** to compress the leaflet tissue therebetween. At any time, the proximal elements **16** may be raised and the distal elements **18** adjusted or inverted to reposition the fixation device **14**, if regurgitation is not sufficiently reduced.

[**0166**] After the leaflets have been captured between the proximal and distal elements **16**, **18** in a desired arrangement, the distal elements **18** may be locked to hold the leaflets in this position or the fixation device **14** may be returned to or toward a closed position. Such locking will be described in a later section. **FIG. 14** illustrates the fixation device **14** in the closed position wherein the leaflets (not shown) are captured and coapted. This is achieved by retraction of the stud **74** proximally relative to coupling member **19** so that the legs **68** of the actuation mechanism **58** apply an upwards force to the distal elements **18** which in turn rotate the distal elements **18** so that the engagement surfaces **50** again face one another. The released proximal elements **16** which are biased outwardly toward distal elements **18** are concurrently urged inwardly by the distal elements **18**. The fixation device **14** may then be locked to hold the leaflets in this closed position as described below.

[**0167**] As shown in **FIG. 15**, the fixation device **14** may then be released from the shaft **12**. As mentioned, the fixation device **14** is releasably coupleable to the shaft **12** by coupling member **19**. **FIG. 15** illustrates the coupling structure, a portion of the shaft **12** to which the coupling member **19** of the fixation device **14** attaches. As shown, the proximal element lines **90** may remain attached to the proximal elements **16** following detachment from shaft **12** to function as a tether to keep the fixation device **14** connected with the catheter **86**. Optionally, a separate tether coupled between shaft **12** and fixation device **14** may be used expressly for this purpose while the proximal element lines **90** are removed. In any case, the repair of the leaflets or tissue may be observed by non-invasive visualization techniques, such as echocardiography, to ensure the desired outcome. If the repair is not desired, the fixation device **14** may be retrieved with the use of the tether or proximal element lines **90** so as to reconnect coupling member **19** with shaft **12**.

[**0168**] In an exemplary embodiments, proximal element lines **90** are elongated flexible threads, wire, cable, sutures or lines extending through shaft **12**, looped through proximal elements **16**, and extending back through shaft **12** to its proximal end. When detachment is desired, one end of each line may be released at the proximal end of the shaft **12** and the other end pulled to draw the free end of the line distally through shaft **12** and through proximal element **16** thereby releasing the fixation device.

[**0169**] **FIG. 16** illustrates a released fixation device **14** in a closed position. As shown, the coupling member **19** remains separated from the shaft **12** of the interventional tool **10** and the proximal elements **16** are deployed so that tissue (not shown) may reside between the proximal elements **16** and distal elements **18**.

[**0170**] While the above described embodiments of the invention utilize a push-to-open, pull-to-close mechanism for opening and closing distal elements **18**, it should be understood that a pull-to-open, push-to-close mechanism is equally possible. For example, distal elements **18** may be coupled at their proximal ends to stud **74** rather than to coupling member **19**, and legs **68** may be coupled at their proximal ends to coupling member **19** rather than to stud **74**. In this example, when stud **74** is pushed distally relative to coupling member **19**, distal elements **18** would close, while pulling on stud **74** proximally toward coupling member **19** would open distal elements **18**.

[**0171**] B. Covering on Fixation Device

[**0172**] The fixation device **14** may optionally include a covering. The covering may assist in grasping the tissue and may later provide a surface for tissue ingrowth. Ingrowth of the surrounding tissues, such as the valve leaflets, provides stability to the device **14** as it is further anchored in place and may cover the device with native tissue thus reducing the possibility of immunologic reactions. The covering may be comprised of any biocompatible material, such as polyethylene terepthalate, polyester, cotton, polyurethane, expanded polytetrafluoroethylene (ePTFE), silicon, or various polymers or fibers and have any suitable form, such as a fabric, mesh, textured weave, felt, looped or porous structure. Generally, the covering has a low profile so as not to interfere with delivery through an introducer sheath or with grasping and coapting of leaflets or tissue.

[**0173**] FIGS. **17A-17C** illustrate a covering **100** on the fixation device **14** wherein the device **14** is in various positions. **FIG. 17A** shows the covering **100** encapsulating the distal elements **18** and the actuation mechanism **58** while the device **14** is in the open position. Thus, the engagement surfaces **50** are covered by the covering **100** which helps to minimize trauma on tissues and provides additional friction to assist in grasping and retaining tissues. **FIG. 17B** shows the device **14** of **FIG. 17A** in the inverted position. The covering **100** is loosely fitted and/or is flexible or elastic such that the device **14** can freely move to various positions and the covering **100** conforms to the contours of the device **14** and remains securely attached in all positions. **FIG. 17C** shows the device **14** in the closed position. Thus, when the fixation device **14** is left behind as an implant in the closed position, the exposed surfaces of the device **14** are substantially covered by the covering **100**. It may be appreciated that the covering **100** may cover specific parts of the fixation device **14** while leaving other parts exposed. For example, the covering **100** may comprise sleeves that fit over the distal elements **18** and not the actuation mechanism **58**, caps that fit over the distal ends **54** of the distal elements **18** or pads that cover the engagement surfaces **50**, to name a few. It may be appreciated that, the covering **100** may allow any frictional accessories, such as barbs, to be exposed. Also, the covering **100** may cover the proximal elements **16** and/or any other surfaces of the fixation device **14**. In any case, the covering **100** should be durable to withstand multiple introduction cycles and, when implanted within a heart, a lifetime of cardiac cycles.

[0174] The covering **100** may alternatively be comprised of a polymer or other suitable materials dipped, sprayed, coated or otherwise adhered to the surfaces of the fixation device **14**. Optionally, the polymer coating may include pores or contours to assist in grasping the tissue and/or to promote tissue ingrowth.

[0175] Any of the coverings **100** may optionally include drugs, antibiotics, anti-thrombosis agents, or anti-platelet agents such as heparin, COUMADIN® (Warfarin Sodium), to name a few. These agents may, for example, be impregnated in or coated on the coverings **100**. These agents may then be delivered to the grasped tissues surrounding tissues and/or bloodstream for therapeutic effects.

[0176] C. Fixation Device Locking Mechanisms

[0177] As mentioned previously, the fixation device **14** optionally includes a locking mechanism for locking the device **14** in a particular position, such as an open, closed or inverted position or any position therebetween. It may be appreciated that the locking mechanism includes an unlocking mechanism which allows the device to be both locked and unlocked. FIGS. **18-21** illustrate an embodiment of a locking mechanism **106**. Referring to **FIG. 18**, in this embodiment, the locking mechanism **106** is disposed between the coupling member **19** and the base **69** of the actuation mechanism **58**. The base **69** is fixedly attached to the stud **74** which extends through the locking mechanism **106**. The stud **74** is releasably attached to the actuator rod **64** which passes through the coupling member **19** and the shaft **12** of the interventional tool **10**. The base **69** is also connected to the legs **68** of the actuation mechanism **58** which are in turn connected to the distal elements **18**.

[0178] **FIG. 18** also illustrates the proximal elements **16**, which in this embodiment straddle the locking mechanism and join beneath the locking mechanism **106**. The proximal elements **16** are shown supported by proximal element lines **90**. The proximal elements **16** are raised and lowered by manipulation of the proximal element lines **90**. In addition, lock lines **92** are shown connected with a release harness **108** of the locking mechanism **106**. The lock lines **92** are used to lock and unlock the locking mechanism **106** as will be described below. The proximal element lines **90** and lock lines **92** may be comprised of any suitable material, typically wire, nitinol wire, cable, suture or thread, to name a few. In addition, the proximal element lines **90** and/or lock lines **92** may include a coating, such as parylene. Parylene is a vapor deposited pinhole free protective film which is conformal and biocompatible. It is inert and protects against moisture, chemicals, and electrical charge.

[0179] **FIG. 19** provides a front view of the locking mechanism **106** of **FIG. 18**. However, here the proximal elements **16** are supported by a single proximal element line **90** which is through both of the proximal elements **16**. In this arrangement both of the elements are raised and lowered simultaneously by action of a single proximal element line **90**. Whether the proximal elements **16** are manipulated individually by separate proximal element lines **90** or jointly by a single proximal element line **90**, the proximal element lines **90** may extend directly through openings in the proximal elements and/or through a layer or portion of a covering **100** on the proximal elements, or through a suture loop above or below a covering **100**.

[0180] FIGS. **20-21** illustrate the locking mechanism **106** showing the locking mechanism **106** in the unlocked and locked positions respectively. Referring to **FIG. 20**, the locking mechanism **106** includes one or more wedging elements, such as rolling elements. In this embodiment, the rolling elements comprise a pair of barbells **110** disposed on opposite sides of the stud **74**, each barbell having a pair of generally cylindrical caps and a shaft therebetween. The barbells **110** and the stud **74** are preferably comprised of cobalt chromium or stainless steel, however any suitable material may be used. The barbells **110** are manipulated by hooked ends **112** of the release harness **108**. When an upwards force is applied to the harness **108** by the lock line **92** (illustrated in **FIG. 18**), the hooked ends **112** raise the barbells **110** against a spring **114**, as shown in **FIG. 20**. This draws the barbells **110** up along a sidewall or sloping surface **116** which unwedges the barbells **110** from against the stud **74**. In this position, the stud **74** is free to move. Thus, when the lock line **92** raises or lifts the harness **108**, the locking mechanism **106** is in an unlocked position wherein the stud **74** is free to move the actuation mechanism **58** and therefore the distal elements **18** to any desired position. Release of the harness **108** by the lock line **92** transitions the locking mechanism **106** to a locked position, illustrated in **FIG. 21**. By releasing the upwards force on the barbells **110** by the hooked ends **112**, the spring **114** forces the barbells **110** downwards and wedges the barbells **110** between the sloping surface **116** and the stud **74**. This restricts motion of the stud **74**, which in turn locks the actuation mechanism **58** and therefore distal elements **18** in place. In addition, the stud **74** may include one or more grooves **82** or indentations which receive the barbells **110**. This may provide more rapid and positive locking by causing the barbells **110** to settle in a definite position, increase the stability of the locking feature by further preventing movement of the barbells **110**, as well as tangible indication to the user that the barbell has reached a locking position. In addition, the grooves **82** may be used to indicate the relative position of the distal elements **18**, particularly the distance between the distal elements **18**. For example, each groove **82** may be positioned to correspond with a 0.5 or 1.0 mm decrease in distance between the distal elements **18**. As the stud **74** is moved, the barbells **110** will contact the grooves **82**; by counting the number of grooves **82** that are felt as the stud **74** is moved, the user can determine the distance between the distal elements **18** and can provide the desired degree of coaptation based upon leaflet thickness, geometry, spacing, blood flow dynamics and other factors. Thus, the grooves **82** may provide tactile feedback to the user.

[0181] The locking mechanism **106** allows the fixation device **14** to remain in an unlocked position when attached to the interventional tool **10** during grasping and repositioning and then maintain a locked position when left behind as an implant. It may be appreciated, however, that the locking mechanism **106** may be repeatedly locked and unlocked throughout the placement of the fixation device **14** if desired. Once the final placement is determined, the lock line **92** and proximal element lines **90** are removed and the fixation device is left behind.

[0182] FIGS. **23**, **24A-24B** illustrate another embodiment of a locking mechanism **106**. Referring to **FIG. 23**, in this embodiment, the locking mechanism **106** is again disposed between the coupling member **19** and the base **69** of the actuation mechanism **58**. The base **69** is connected to the stud **74** which extends through the locking mechanism **106**, and connects to an actuator rod which extends through the

coupling member **19** and the shaft **12** of the interventional tool **10**. The base **69** is also connected to the legs **68** of the actuation mechanism **58** which are in turn connected to the distal elements **18**. **FIG. 23** also illustrates the proximal elements **16** which manipulate the locking mechanism **106** in this embodiment. The locking mechanism **106** comprises folded leaf structures **124** having overlapping portions **124***a*, **124***b*, each folded structure **124** being attached to a proximal element **16**. In **FIG. 23** and **FIG. 24**A, the folded structures **124** are shown without the remainder of the locking mechanism **106** for clarity. Proximal elements **16** are flexible and resilient and are biased outwardly. The folded leaf structures **124** include holes **125** (**FIG. 24B**) in each overlapping portion **124***a*, **124***b* so that the stud **74** passes through the holes **125** of the portions **124***a*, **124***b* as shown. The locking mechanism includes slots into which ends **123** of the folded leaf structures **124** are fixed. When the proximal elements **16** are in an undeployed position, as in **FIG. 23**, the folded leaf structures **124** lie substantially perpendicular to the stud **74** so that the holes **125** in each overlapping portion are vertically aligned. This allows the stud **74** to pass freely through the holes and the locking mechanism **106** is considered to be in an unlocked position.

[**0183**] Deployment of the proximal elements **16**, as shown in **FIG. 24**A, tilts the folded leaf structures **124** so as to be disposed in a non-perpendicular orientation relative to the stud **74** and the holes **125** are no longer vertically aligned with one another. In this arrangement, the stud **74** is not free to move due to friction against the holes of the folded leaf structure **124**. **FIG. 24B** provides a larger perspective view of the folded structures **124** in this position. Thus, the locking mechanism **106** is considered to be in a locked position. This arrangement allows the fixation device **14** to maintain an unlocked position during grasping and repositioning and then maintain a locked position when the proximal elements **16** are deployed and the fixation device **14** is left behind as an implant. It may be appreciated, however, that the locking mechanism **106** may be repeatedly locked and unlocked throughout the placement of the fixation device **14** if desired.

[**0184**] FIGS. **25**, **26**A-**26**B illustrate another embodiment of a locking mechanism **106**. Referring to **FIG. 25**, in this embodiment, the locking mechanism **106** is again disposed between the coupling member **19** and the base **69** of the actuation mechanism **58**. And, the base **69** is connected to the stud **74** which extends through the locking mechanism **106** and connects to an actuator rod which extends through the coupling member **19** and the shaft of the interventional tool **10**. **FIG. 25** illustrates the proximal elements **16** which manipulate the locking mechanism **106** in this embodiment. The locking mechanism **106** comprises C-shaped structures **128**, each C-shaped structure **128** attached to a proximal element **16**. The C-shaped structures **128** hook around the stud **74** so that the stud **74** passes through the "C" of each structure **128** as shown in FIGS. **26**A-**26**B. As shown, the structures **128** cross each other and the "C" of each structure **128** faces each other. A spring **130** biases the C-shaped structures into engagement with one another. When the proximal elements are in an undeployed position, as in **FIG. 26**A, the C-shaped structures **128** are urged into an orientation more orthogonal to the axial direction defined by stud **74**, thus bringing the "C" of each structure **128** into closer axial alignment. This allows the stud **74** to pass freely through the "C" of each structure **128**. Deployment of the proximal elements **16** outwardly urges the C-shaped structures into a more angular, non-orthogonal orientation relative to stud **74** causing the sidewalls of the "C" of each structure **128** to engage stud **74** more forcefully. In this arrangement, the stud **74** is not free to move due to friction against the "C" shaped structures **128**.

[**0185**] D. Additional Embodiments of Fixation Devices

[**0186**] FIGS. **22**A-**22**B illustrate a variation of the fixation device **14** described above in which the distal and proximal elements **16**, **18** on each side of the fixation device are movable laterally toward and away from each other to facilitate capture of more widely-separated leaflets or other tissue flaps. The coupling member **19** is bifurcated into two resilient and flexible branches **19**A, **19**B which are biased outwardly into the position shown in **FIG. 22**A, but which are movable to the position shown in **FIG. 22B**. As an alternative, branches **19**A, **19**B may be more rigid members connected to coupling member **19** by pins or hinges so as to be pivotable toward and away from each other. Each of proximal elements **16** and distal elements **18** are coupled at their proximal ends to one branch **19**A or **19**B of the coupling member **19**. Legs **68** are coupled at their proximal ends to base **69**, and therefore stud **74**, and at their distal ends to distal elements **18**, as described above. Translation of stud **74** distally or proximally relative to coupling member **19** opens or closes distal elements **18** as in formerly described embodiments. A collar **131** is slidably disposed over coupling member **19** and has an annular groove **133** on its inner wall configured to slide over and frictionally engage detents **135** on branches **19**A, **19**B. A sheath **137** is positioned coaxially over shaft **12** and is slideable relative thereto to facilitate pushing collar **131** distally over coupling member **19**.

[**0187**] In use, the embodiment of FIGS. **22**A-**22**B is introduced with distal and proximal elements **16**, **18** in the closed position. Collar **131** is pushed distally against, but not over, detents **135** so that branches **19**A, **19**B are disposed together and fixation device **14** has a minimal profile. When the user is ready to capture the target tissue (e.g. valve leaflets), sheath **137** is retracted so that collar **131** slides proximally over coupling member **19**. This allows branches **19**A, **19**B to separate into the position of **FIG. 22A**. Actuator **64** is pushed distally so as to open distal elements **18**. Tension is maintained on proximal element lines **90** (not shown in FIGS. **22**A-**22**B) so that proximal elements **16** remain separated from distal elements **18**. When tissue is positioned between the proximal and distal elements, tension is released on proximal element lines **90** allowing the tissue to be captured between the proximal and distal elements. Sheath **137** may then be advanced distally so that collar **131** urges branches **19**A, **19**B back together. Sheath **137** is advanced until groove **133** in collar **131** slides over detents **135** and is frictionally maintained thereon as shown in **FIG. 22B**. Sheath **137** may then be retracted from collar **131**. Distal elements **18** may be closed, opened or inverted by advancing or retracting stud **74** via actuator **64**, as in the embodiments described above. It should be understood that the embodiment of FIGS. **22**A-**22**B preferably includes a locking mechanism as described above, which has been omitted from the figures for clarity.

[**0188**] In a further alternative of the embodiment of FIGS. **22**A-**22**B, fixation device **14** may be configured to allow for

independent actuation of each of the lateral branches **19**A, **19**B and/or distal elements **18**. In an exemplary embodiment, shaft **12** and coupling member **19** may be longitudinally split into two identical halves such that a first branch **19**A may be drawn into collar **131** independently of a second branch **19**B. Similarly, actuator shaft **64** may be longitudinally split so that each half can slide independently of the other half, thus allowing one of distal elements **18** to be closed independently of the other distal element **18**. This configuration permits the user to capture one of the valve leaflets between one of the distal and proximal elements **16**, **18**, then draw the corresponding branch **19**A into the collar **131**. The fixation device **14** may then be repositioned to capture a second of the valve leaflets between the other proximal and distal elements **16**, **18**, after which the second branch **19**B may be drawn into collar **131** to complete the coaptation. Of course, the closure of distal elements **18** may occur either before or after branches **19**A, **19**B are drawn into collar **131**.

[**0189**] FIGS. **27-28** illustrate an additional embodiment of the fixation device **14**. As shown in **FIG. 27**, the fixation device **14** includes a coupling member **19** which couples the device **14** to the shaft **12** of the interventional tool **10**. Here, the device **14** also includes a top coupler **150** attached to coupling member **19** and a bottom coupler **152** attached to the stud **74** so that the two couplers are axially moveable relative to one another. The distal elements **18** are rotatably attached to the top coupler **150** by upper pins **156** and rotatably attached to the bottom coupler **152** by lower pins **160**. When the bottom coupler **152** is advanced, the pins **156**, **160** are drawn apart. The upper pins **156** are disposed within slots **158** as shown. When the bottom coupler **152** is advanced distally relative to top coupler **150**, pins **156**, **160** are drawn apart. Angling of the slots **158** causes the distal elements **18** to rotate toward the coupling member **19** as the pins **156**, **160** are drawn apart. Relative movement of the couplers **150**, **152** may be achieved by any suitable mechanism including sliding or threading.

[**0190**] **FIG. 28** illustrates the fixation device **14** in the closed position. Here, the device **14** has a low profile (width in the range of approximately 0.140-0.160 inches orthogonal to the axial direction defined by shaft **12**/stud **74**) so that the device **14** may be easily passed through a catheter and through any tissue structures. To open the device **14** the bottom coupler **152** is then retracted or the couplers **150**, **152** brought toward one another to rotate the distal elements **18** outward. The components of the fixation device **14** may be formed from stainless steel or other suitable metal, such as by machining, or formed from a polymer, such as by injection molding. In addition, portions of the fixation device **14**, particularly the distal elements **18**, may be covered with a covering such as described above, to promote tissue ingrowth, reduce trauma, enhance friction and/or release pharmacological agents. Alternatively, the device **14** may have a smooth surface which prevents cellular adhesion thereby reducing the accumulation of cells having potential to form an emboli.

[**0191**] Optionally, the fixation device **14** may include tissue retention features such as barbs **170** and/or bumpers **172**, illustrated in FIGS. **29-30**. The barbs **170** may extend from the engagement surfaces **50** of the distal elements **18**, as shown, and may be present in any number and any arrangement. Thus, the barbs **170** will engage the leaflets or tissue during grasping to assist in holding the tissue either by frictional engagement, minor surface penetration or by complete piercing of the tissue, depending on the length and shape of the barbs **170** selected. Alternatively or in addition, bumpers **172** may extend from the distal elements **18**. As shown in **FIG. 29**, each bumpers **172** may extend from the proximal end **52** of the distal element **18** and curve toward the free end **54** of the distal element **18**. Or, as shown in **FIG. 30**, each bumper **172** may extend from the free end **54** and curve toward the proximal end **52**. Bumpers **172** are preferably constructed of a resilient metal or polymer and may have any of various geometries, including a solid thin sheet or a loop-shaped wire form. The bumpers **172** may help to actively engage and disengage tissue from the barbs **170** during opening and closing of the fixation device **14**. Further, to assist in grasping a tissue, the engagement surfaces **50** may have any texture or form to increase friction against the grasped tissue. For example, the surfaces **50** may include serrations, scales, felt, barbs, polymeric frictional elements, knurling or grooves, to name a few.

[**0192**] **FIG. 31** illustrates the engagement surface **50** having a serrated edge **174** to improve grip on tissue engaged. **FIG. 31** also illustrates an embodiment of the fixation device **14** mounted on an interventional tool **10** or delivery catheter for ventricular approach to the mitral valve. Here the device **14** is mounted on the shaft **12** with the engagement surfaces **50** facing distally relative to shaft **12** (and facing upstream relative to the mitral valve). Thus, when the mitral valve is approached from the ventricular side, the engagement surfaces **50** can be pressed against the downstream surfaces of the valve without passing through the valve. It may be appreciated that any of the embodiments of the fixation device **14** described herein may be mounted on shaft **12** in this orientation for approach to any valve or tissue, including embodiments that include both proximal and distal elements.

[**0193**] It may be appreciated that when the fixation device **14** is mounted on the shaft **12** in orientation illustrated in **FIG. 31**, the position of the distal elements and the proximal elements are reversed. In such instances it is useful to keep in mind that the distal elements contact the distal surface or downstream surface of the leaflets and the proximal elements contact the proximal surface or upstream surface of the leaflets. Thus, regardless of the approach to the valve and the relative position of the proximal and distal elements on the fixation device, the proximal and distal elements remain consistent in relation to the valve.

[**0194**] FIGS. **32-34** illustrate an additional embodiment of the fixation device **14**. As shown in **FIG. 32**, the fixation device **14** includes a coupling member **19**, proximal elements **16** and distal elements **18** which are each connected to a set of base components **186**. The distal elements **18** are connected to the base components **186** (top base component **186***a* and a bottom base component **186***b*) by extension arms **188**. In this embodiment, each distal element **18** is connected by two extension arms **188** in a crossed arrangement so that one extension arm **188** connects the distal element **18** to the top base component **186***a* and the other extension arm **188'** connects the distal element **18** to the bottom base component **186***b*. The top base component **186***a* can be separated from the bottom base component **186***b* by any suitable method which may be torque driven, spring driven or push/pull. Increasing the separation distance between the base compo-

nents **186** draws the distal elements **18** inward toward the base components **186**, as shown in **FIG. 33**. This allows the tissue to be grasped between the distal elements **18** and proximal elements **16** while in an arrangement wherein the distal elements **18** are parallel to each other. This may prevent inconsistent compression of the tissue and may better accommodate tissues or leaflets of varying thicknesses. As shown in **FIG. 34**, the distal elements **18** may be drawn together and the proximal elements **16** may be retracted to form a low profile fixation device **14**.

[**0195**] FIGS. **35-39**, **40A-40D**, **41-42**, **43A-43C** illustrate another embodiment of the fixation device **14**. In this embodiment, the device **14** is deliverable in the inverted position and moveable to the open position for grasping of the tissue. **FIG. 35** illustrates the fixation device **14** in the inverted position. The fixation device **14** includes a shaft **198**, proximal elements **16** and distal elements **18**. Each distal element **18** has a proximal end **52** rotatably connected to the shaft **198** and a free end **54**. The fixation device **14** also includes an actuator rod **204**, a base **202** and a pair of deployment arms **200** attached to the base **202** as shown. In the inverted position, the extender **204** is extended and deployment arms **200** are disposed between the actuator rod **204** and the distal elements **18**. As shown in **FIG. 36**, the actuator rod **204** may be retracted so that the deployment arms **200** press against the distal elements **18**, rotating the distal elements **18** from the inverted position to the open position. The angle of the distal elements **18** may be adjusted by retracting or extending the actuator rod **204** various distances. As shown in **FIG. 37**, further retraction of the actuator rod **204** raises the distal elements **18** further.

[**0196**] In the open position, tissue or leaflets may be grasped between the distal elements **18** and proximal elements **16**. **FIG. 38** illustrates the proximal elements **16** in their released position wherein the tissue or leaflet would be present therebetween. Hereinafter, the tissue will be referred to as leaflets. In this embodiment, each distal element **18** includes an implant pledget **210**, typically press-fit or nested within each distal element **18**. The implant pledgets **210** will be attached to the leaflets by ties, such as sutures or wires, and will be used to hold the leaflets in desired coaptation. The implant pledgets **210** will then be separated from the fixation device **14** and will remain as an implant.

[**0197**] To attach the implant pledgets **210** to the leaflets, the leaflets and implant pledgets **210** are punctured by fixation tools **220**, as shown in **FIG. 39**. The fixation tools **220** extend from the catheter **86**, pass through the leaflets and puncture the implant pledgets **210**. Thus, the pledgets **210** are comprised of a puncturable material, such as structural mesh. The fixation tools **220** are used to deliver an anchor **222** as illustrated in larger view in FIGS. **40A-40D**. **FIG. 40A** shows the fixation tool **220** including a sleeve **224** surrounding the fixation tool **220** and an anchor **222** loaded therebetween. In this embodiment, the anchor includes one or more flaps **228** which are held within the sleeve **224**. It may be appreciated that the anchor **222** may have any suitable form. Additional exemplary embodiments of anchors are provided in commonly assigned U.S. patent application Ser. No. 09/894,463 (Attorney Docket No. 020489-000400US) incorporated herein for all purposes. A suture **226** is attached to the anchor **222** and extends through the sleeve **224** or on the outside of the sleeve **224**, as shown, to the catheter **86**. The fixation tools **220** are advanced so that the anchor **222** passes through the leaflet (not shown) and the pledget **210**, as shown in **FIG. 41**.

[**0198**] Referring now to **FIG. 40B**, the sleeve **224** is then retracted to expose the flaps **228** which releases the anchor **222** from the confines of the sleeve **224**. The flaps **228** extend radially outwardly, illustrated in **FIG. 40C**, by spring loading, shape memory or other self-expanding mechanism. Thus, the flaps **228** are positioned against the distal side of the pledget **210**, the suture **226** passing through the pledget **210** and the leaflet, as shown in **FIG. 41**. At this point, the pledgets **210** can be removed from the distal elements **18**. By extending the actuator rod **204** distally, the base **202** draws the deployment arms **200** distally which returns the distal elements **18** to the inverted position, as shown in **FIG. 42**. Since the pledgets **210** have been pierced by the fixation tools **220** and the anchors **222** have been deployed, the pledgets **210** and the leaflets disengage from distal elements **18** and remain in position. The proximal elements **16** may also be returned to their initial position as shown, using any of various mechanisms as have been described above in connection with other embodiments. Referring now to **FIG. 40D**, the fixation tool **220** is then removed while the anchor **222** remains in place with suture **226** attached.

[**0199**] The implant pledgets **210** are then separated from the fixation device **14** and left behind to maintain coaptation of the leaflets in the desired position. FIGS. **43A-43C** illustrate the implant pledgets **210** from various perspective views. **FIG. 43A** provides a perspective top view showing that the pledgets **210** are connected by a link **230** that allows the pledgets **210** to be released from one side of the fixation device **14**. In addition, the sutures **226** are fixed together, either by knot tying or placement of a suture fastener **232** as shown. It may be appreciated that the suture fastener **232** may have any suitable form. Additional exemplary embodiments of suture fasteners **232** are provided in commonly-assigned U.S. patent application Ser. No. 10/087,004, filed Mar. 1, 2002 (Attorney Docket No. 020489-000500US), which is incorporated herein by reference for all purposes. **FIG. 43B** provides a perspective bottom view showing the anchor **222** positioned against the bottom side of the pledget **210**. Likewise, **FIG. 43C** provides a perspective side view also showing the anchor **222** positioned against the bottom side of the pledget **210**.

[**0200**] FIGS. **44A-44B**, **45-46** illustrate another embodiment of the fixation device **14**. As shown in **FIG. 44A**, the fixation device **14** is mounted on the shaft **12** and is comprised of distal elements **18** and a retention clip **36** comprised of a semi-rigid material having a folded shape. The material may be any suitable material providing rigidity with recoiling properties such as various metals or plastics. The folded shape is such that a fold **252** is directed distally and free ends **254** are directed proximally toward the distal elements **18**. Penetration elements **256** are disposed near the free ends **254** and directed toward the shaft **12**. In addition, an opening **258** is located near the fold **252**, as illustrated in **FIG. 44B** which provides a perspectives view of the device **14**. Referring back to **FIG. 44A**, the fold **252** is attached to an actuator rod **74** which passes through the shaft **12** and an arrow-shaped structure **260** is disposed on the shaft **12** between the free ends **254**, proximal to the opening **258**, as shown. In this arrangement, the fixation device **14** is advanced through the valve so that the distal elements **18** are disposed below the leaflets. The device may then be

retracted proximally to capture the leaflets within the distal elements **18**. As shown in **FIG. 45**, retraction of the actuator rod **74** draws the retention clip **36** toward the distal elements **18** so that the sloping sides of the arrow-shaped structure **260** force the free ends **254** outward, away from the shaft **12**. Further retraction of actuator rod **74** results in the sloping sides of arrow shaped structure **260** falling into the opening **258** in retention clip **36**, causing retention clip **36** to recoil back to the closed position as shown in **FIG. 46**, with the free ends **254** extending through the distal elements **18**. This allows the penetration elements **256** to penetrate the leaflets (not shown) to secure engagement therewith. The actuator rod **74** is then detached from the retention clip **36** and shaft **12** is detached from distal elements **18** which are left in place to hold the leaflets in a coapted arrangement.

[**0201**] It may be appreciated that the foregoing embodiment may also include proximal elements **16** configured to be positioned on the upstream side of the valve leaflets to assist in the capture and fixation. Such proximal elements may be mounted to shaft **12** so as to be removed following fixation of the leaflets, or the proximal elements may be connected to distal elements **18** and/or retention clip **36** to be implanted therewith.

[**0202**] In further embodiments, the proximal elements may be manipulated to enhance gripping. For example, the proximal elements may be lowered to grasp leaflets or tissue between the proximal and distal elements, and then the proximal elements may be moved to drag the leaflets or tissue into the fixation device. In another example, the proximal elements may be independently lowered to grasp the leaflets or tissue. This may be useful for sequential grasping. In sequential grasping, one proximal element is lowered to capture a leaflet or tissue portion between the proximal and distal elements. The fixation device is then moved, adjusted or maneuvered to a position for grasping another leaflet or tissue portion between another set of proximal and distal elements. In this position, the second proximal element is then lowered to grasp this other leaflet or tissue portion.

[**0203**] IV. Delivery Device

[**0204**] A. Overview of Delivery Device

[**0205**] **FIG. 47** provides a perspective view of an embodiment of a delivery device or delivery catheter **300** which may be used to introduce and position a fixation device as described above. The delivery catheter **300** includes a shaft **302**, having a proximal end **322** and a distal end **324**, and a handle **304** attached to the proximal end **322**. A fixation device (not shown) is removably coupleable to the distal end **324** for delivery to a site within the body, typically for endovascular delivery to the mitral valve. Thus, extending from the distal end **324** is a coupling structure **320** for coupling with a fixation device. Also extending from the distal end **324** is an actuator rod **64**. The actuator rod **64** is connectable with the fixation device and acts to manipulate the fixation device, typically opening and closing the distal elements. Such coupling to a fixation device is illustrated in **FIG. 48**.

[**0206**] **FIG. 48** illustrates an embodiment of a fixation device **14** coupled to the distal end **324** of the delivery catheter **300**. The shaft **302** is shown having a nose **318** near its distal end **324**. In this embodiment, the nose **318** has a flanged shape. Such a flanged shape prevents the nose **318** from being retracted into a guiding catheter or introducer as will be discussed in later sections. However, it may be appreciated that the nose **318** may have any shape including bullet, rounded, blunt or pointed, to name a few. Extending from the nose **318** is a compression coil **326** through which the coupling structure **320** and actuator rod **64** pass. The actuator rod **64** is coupleable, as shown, with the stud **74** of the fixation device **14**. Such coupling is illustrated in **FIG. 49**.

[**0207**] **FIG. 49** illustrates a portion of the shaft **302** of the delivery catheter **300** and a fixation device **14** which is coupleable with the catheter **300**. Passing through the shaft **302** is the actuator rod **64**. In this embodiment, the actuator rod **64** comprises a proximal extremity **303** and a distal extremity **328**, the distal extremity **328** of which is surrounded by a coil **330**. The proximal extremity **303** is typically comprised of stainless steel, nitinol, or Elgiloyg, to name a few, and may have a diameter in the range of 0.010 in. to 0.040 in., preferably 0.020 in. to 0.030 in., more preferably 0.025 in., and a length in the range of 48 to 72 in. The distal extremity **328** may be tapered, is typically comprised of stainless steel, nitinol, or Elgiloy®, to name a few, and may have a diameter in the range of 0.011 to 0.025 in and a length in the range of 4 to 12 in. Such narrowing increases flexibility of the distal end **324** of the actuator rod **64**. The actuator rod **64** further comprises a joiner **332** which is attached to the distal extremity **328**. The joiner **332** is removably attachable with stud **74** of the fixation device **14**. In this embodiment, the joiner **332** has internal threads which mate with external threads on the stud **74** of the fixation device **14**. As described previously, the stud **74** is connected with the distal elements **18** so that advancement and retraction of the stud **74**, by means of the actuator rod **64**, manipulates the distal elements. Likewise, the coupling member **19** of the fixation device **14** mates with the coupling structure **320** of the catheter **300**. Thus, the coupling member **19** and coupling structure **320** function as previously described in relation to FIGS. **6A-6B**.

[**0208**] Referring back to **FIG. 48**, the fixation device **14** may also include a locking mechanism which includes a release harness **108**, as previously described in relation to FIGS. **18-21**. Lock lines **92** are connected with the release harness **108** to lock and unlock the locking mechanism **106** as previously described. The lock lines **92** extend through the shaft **302** of the delivery catheter **300** and may connect with the release harness **108** in various arrangements as will be illustrated in later sections. Similarly, proximal element lines **90** extend through the shaft **302** of the delivery catheter **300** and connect with the proximal elements **16**. The proximal elements **16** are raised and lowered by manipulation of the proximal element lines **90** as previously described. The proximal element lines **90** may connect with the proximal elements **16** in various arrangements as will be illustrated in later sections.

[**0209**] Referring back to **FIG. 47**, the handle **304** attached to the proximal end **322** of the shaft **302** is used to manipulate the coupled fixation device **14** and to optionally decouple the fixation device **14** for permanent implantation. As described, the fixation device **14** is primarily manipulated by the actuator rod **64**, proximal element lines **90** and lock lines **92**. The actuator rod **64** manipulates the distal elements **18**, the proximal element lines **90** manipulate the

proximal elements **16** and the lock lines **92** manipulate the locking mechanism. In this embodiment, the actuator rod **64** may be translated (extended or retracted) to manipulate the distal elements **18**. This is achieved with the use of the actuator rod control **314** which will be described in later sections. The actuator rod **64** may also be rotated to engage or disengage the threaded joiner with the threaded stud **74**. This is achieved with the use of the actuator rod handle **316** which will also be described in later sections. Further, the proximal element lines **90** may be extended, retracted, loaded with various amounts of tension or removed with the use of the proximal element line handle **312**. And, the lock lines **92** may be may be extended, retracted, loaded with various amounts of tension or removed with the use of the lock line handle **310**. Both of these handles **310**, **312** will be described in more detail in later sections. The actuator rod handle **316**, actuator rod control **314**, proximal element line handle **312** and lock line handle **310** are all joined with a main body **308** within which the actuator rod **64**, proximal element lines **90** and lock lines **92** are guided into the shaft **302**. The handle **304** further includes a support base **306** connected with the main body **308**. The main body **308** is slideable along the support base **306** to provide translation of the shaft **302**. Further, the main body **308** is rotateable around the support base **306** to rotate the shaft.

[**0210**] B. Delivery Catheter Shaft

[**0211**] **FIG. 50** illustrates a cross-sectional view of the delivery catheter shaft **302** of **FIG. 47**. In this embodiment, the shaft **302** has a tubular shape with inner lumen **348** and is comprised of a material which provides hoop strength while maintaining flexibility and kink resistance, such as a braided laminated material. Such material may include stainless steel braided or coiled wire embedded in a polymer such as polyurethane, polyester, Pebax, Grilamid TR55, and AESNO to name a few. To provide further support and hoop strength, a support coil **346** is disposed within the lumen **348** of shaft **302** as illustrated in **FIG. 50**.

[**0212**] Passing through the support coil **346** are a variety of elongated bodies, including tubular guides and cylindrical rods. For example, one type of tubular guide is a compression coil **326** extending through lumen **348** from the proximal end **322** to the distal end **324** of the shaft **302**, and the actuator rod **64** extends through the compression coil **326**. Therefore, the compression coil typically has a length in the range of 48 to 60 in. and an inner diameter in the range of 0.020 to 0.035 in. to allow passage of the actuator rod **64** therethrough. The actuator rod **64** is manipulable to rotate and translate within and relative to the compression coil **326**. The compression coil **326** allows lateral flexibility of the actuator rod **64** and therefore the shaft **302** while resisting buckling and providing column strength under compression. The compression coil may be comprised of 304V stainless steel to provide these properties.

[**0213**] To provide additional tensile strength for the shaft **302** and to minimize elongation, a tension cable **344** may also pass through the support coil **346**. The tension cable **344** extends through lumen **348** from the proximal end **322** to the distal end **324** of the shaft **302**. Therefore, the tension cable **344** typically has a diameter in the range of 0.005 in. to 0.010 in. and a length in the range of 48 to 60 in. In preferred embodiments, the tension cable **344** is comprised of 304V stainless steel.

[**0214**] In addition, at least one lock line shaft **341** having a tubular shape may be present having a lock line lumen **340** through which lock lines **92** pass between the lock line handle **310** and the locking mechanism **106**. The lock line shaft **341** extends through lumen **348** from the proximal end **322** to the distal end **324** of the shaft **302**. Therefore, the lock line shaft **341** typically has a length in the range of 48 to 60 in., an inner diameter in the range of 0.016 to 0.030 in., and an outer diameter in the range of 0.018 to 0.034 in. In preferred embodiments, the lock line shaft **341** is comprised of a 304V stainless steel coil however other structures or materials may be used which provide kink resistance and compression strength.

[**0215**] Similarly, at least one proximal element line shaft **343** having a tubular shape may be present having a proximal element line lumen **342**. Proximal element lines **90** pass through this lumen **342** between the proximal element line handle **312** and the proximal elements **16**. Thus, the proximal element line shaft **343** extends through lumen **348** from the proximal end **322** to the distal end **324** of the shaft **302**. Therefore, the proximal element line shaft **343** typically has a length in the range of 48 to 60 in., an inner diameter in the range of 0.016 to 0.030 in., and an outer diameter in the range of 0.018 to 0.034 in. In preferred embodiments, the proximal element line shaft **343** is comprised of a 304V stainless steel coil however other structures or materials may be used which provide kink resistance and compression strength.

[**0216**] In this embodiment, the elongated bodies (compression coil **326** enclosed actuator rod **64**, tension cable **344**, lock line shaft **342**, proximal element line shaft **343**) each "float" freely in inner lumen **348** within the support coil **346** and are fixed only at the proximal end **322** and distal end **324** of shaft **302**. The lumen **348** is typically filled and flushed with heparinized saline during use. Alternatively or in addition, the lumen **348** may be filled with one or more fillers, such as flexible rods, beads, extruded sections, gels or other fluids. Preferably the fillers allow for some lateral movement or deflection of the elongated bodies within lumen **348** but in some cases may restrict such movement. Typically, the elongated bodies are fixed at the proximal and distal ends of the shaft and are free to move laterally and rotationally therebetween. Such freedom of movement of the elongated bodies provides the shaft **302** with an increased flexibility as the elongated bodies self-adjust and reposition during bending and/or torqueing of the shaft **302**. It may be appreciated that the elongated bodies may not be fixed at the proximal and distal ends. The elongated bodies are simply unconstrained relative to the shaft **302** in at least one location so as to be laterally moveable within the lumen **348**. Preferably the elongated bodies are unrestrained in at least a distal portion of the catheter, e.g. 5-15 cm from the distal end **324**, so as to provide maximum flexibility in the distal portion.

[**0217**] It may be appreciated, however, that alternate shaft **302** designs may also be used. For example, referring to **FIG. 51**, in this embodiment the shaft **302** again has a tubular shape with an inner lumen **348** and a support coil **346** disposed within the lumen **348** of shaft **302**. Filling the inner lumen **348** within the support coil **346** is an extrusion **334** having lumens through which pass a variety of elongated bodies, including the compression coil **326** enclosed actuator rod **64**, tension cable **344**, lock line shafts **342**, and

proximal element line shafts **343**, as shown. The support coil **346** and elongated bodies may have the same geometries and be comprised of the same materials as described above in relation to **FIG. 50**.

[**0218**] Alternatively, as shown in **FIG. 52**, the shaft **302** may include an internal partition **350** to create multiple lumens within the shaft **302**. For example, the partition **350** may have a central lumen **352** for passage of the actuator rod **64**, optionally surrounded by the compression coil **326**. In addition, the partition **350** may also create at least one lock line lumen **340** for passage of a lock line **92** and at least one proximal element line lumen **341** for passage of a proximal element line **90**. Optionally, each of the lumens defined by partition **350** may be lined with a kink-resistant element, such as a coil as in previous embodiments.

[**0219**] FIGS. **52A-52C** illustrate embodiments of the nose **318** of the shaft **302**. In **FIG. 52A**, the nose **318** comprises a tip ring **280** and a lock ring **282**. In preferred embodiments, Epoxy and PEBAX are deposited between the tip ring **280** and the lock ring **282** to bond them together. The lock ring **282** has a geometry to mate with the tip ring **280** to maintain relative alignment between the two. **FIG. 52B** illustrates another embodiment of the nose **318** of the shaft **302**. Here, the tip ring **280** is covered by a soft tip **284** to provide a more atraumatic tip and a smoother transition to the shaft.

[**0220**] C. Lock Line Arrangements

[**0221**] As mentioned previously, when lock lines **92** are present, the lines **92** pass through at least one lock line lumen **340** between the lock line handle **310** and the locking mechanism **106**. The lock lines **92** engage the release harnesses **108** of the locking mechanism **106** to lock and unlock the locking mechanism **106** as previously described. The lock lines **92** may engage the release harnesses **108** in various arrangements, examples of which are illustrated in FIGS. **53A-53C**. In each embodiment, two lock line lumens **340** are present within the shaft **302** of the delivery catheter **300** terminating at the nose **318**. The lumens **340** are disposed on alternate sides of the actuator rod **64** so that each lumen **340** is directed toward a release harness **108**.

[**0222**] **FIG. 53A** illustrates an embodiment wherein two lock lines **92, 92'** pass through a single lock line lumen **340** and are threaded through a release harness **108** on one side of the actuator rod **64** (the actuator rod **64** is shown without surrounding housing such as coupling structure, for clarity). The lock lines **92, 92'** are then separated so that each lock line passes on an opposite side of the actuator rod **64**. The lock lines **92, 92'** then pass through the release harness **108'** on the opposite side of the actuator rod **64** and continue together passing through a another single lock line lumen **340'**. This lock line arrangement is the same arrangement illustrated in **FIG. 48**.

[**0223**] **FIG. 53B** illustrates an embodiment wherein one lock line **92** passes through a single lock line lumen **340**, is threaded through a release harness **108** on one side of the actuator rod **64**, and is returned to the lock line lumen **340**. Similarly, another lock line **92'** passes through another single lock line lumen **340'**, is threaded through a different release harness **108'** located on the opposite side of the actuator rod **64**, and is returned to the another single lock line lumen **340'**.

[**0224**] **FIG. 53C** illustrates an embodiment wherein both lock lines **92, 92'** pass through a single lock line lumen **340**. One lock line **92** is threaded through a release harness **108** on one side of the actuator rod **64** and is then passed through another lock line lumen **340'** on the opposite side of the actuator rod **64**. The other lock line **92'** is threaded through another release harness **108'** on the other side of the actuator rod **64'** and is then passed through the another lock line lumen **340'** with the previous lock line **92**.

[**0225**] It may be appreciated that a variety of lock line arrangements may be used and are not limited to the arrangements illustrated and described above. The various arrangements allow the harnesses **108** to be manipulated independently or jointly, allow various amounts of tension to be applied and vary the force required for removal of the lock lines when the fixation device is to be left behind. For example, a single lock line passing through one or two lumens may be connected to both release harnesses for simultaneous application of tension.

[**0226**] D. Proximal Element Line Arrangements

[**0227**] As mentioned previously, when proximal element lines **90** are present, the lines **90** pass through at least one proximal element line lumen **342** between the proximal element line handle **312** and at least one proximal element **16**. The proximal element lines **90** engage the proximal elements **16** to raise or lower the element **16** as previously described. The proximal element lines **90** may engage the proximal elements **16** in various arrangements, examples of which are illustrated in FIGS. **54A-54B**. In each embodiment, two proximal element line lumens **342** are present within the shaft **302** of the delivery catheter **300** terminating at the nose **318**. The lumens **342** are disposed on alternate sides of the actuator rod **64** (the actuator rod **64** is shown without surrounding housing such as coupling structure, for clarity) so that each lumen **342** is directed toward a proximal element **16**.

[**0228**] **FIG. 54A** illustrates an embodiment wherein one proximal element line **90** passes through a single proximal element line lumen **342**. The proximal element line **90** is threaded through an eyelet **360** of a proximal element **16** on one side of the actuator rod **64**, passes over the actuator rod **64** and is threaded through an eyelet **360'** of another proximal element **16'** on the other side of the actuator rod **64**. The proximal element line **90** then passes through another single proximal element line lumen **342'**. This proximal element line arrangement is the same arrangement illustrated in **FIG. 48**.

[**0229**] **FIG. 54B** illustrates an embodiment wherein one proximal element line **90** passes through a single proximal element line lumen **342**, is threaded through an eyelet **360** of a proximal element **16** on one side of the actuator rod **64**, and is returned to the proximal element line lumen **342**. Similarly, another proximal element line **90'** passes through another single proximal element line lumen **342'** on the opposite side of the actuator rod **64**, and is returned to the another single proximal element line lumen **342'**.

[**0230**] It may be appreciated that a variety of proximal element line arrangements may be used and are not limited to the arrangements illustrated and described above. The various arrangements allow the proximal elements to be manipulated independently or jointly, allow various amounts of tension to be applied and vary the force required for removal of the proximal element lines when the fixation

device is to be left behind. For example, a single proximal element line passing through one or two lumens in shaft **302** may be used for simultaneous actuation of both proximal elements. In addition, snares or hooks may be mounted within delivery catheter **300** so as to be movable distally to engage proximal elements **16** and draw them away from distal elements **18**.

[**0231**] E. Main Body of Handle

[**0232**] **FIG. 55** illustrates an embodiment of the handle **304** of the delivery catheter **300**. As mentioned previously, the actuator rod handle **316**, actuator rod control **314**, proximal element line handle **312** and lock line handle **310** are all joined with the main body **318**. The handle **304** further includes a support base **306** connected with the main body **308**. The main body **308** is slideable along the support base **306** to provide translation of the shaft **302** and the main body **308** is rotateable around the support base **306** to rotate the shaft.

[**0233**] **FIG. 56** provides a partial cross-sectional view of the main body **308** of the handle **304** depicted in **FIG. 55**. As shown, the main body **308** includes a sealed chamber **370** within which the actuator rod **64**, proximal element lines **90** and lock lines **92** are guided into the shaft **302**. The sealed chamber **370** is in fluid communication with the inner lumen **348** of shaft **302** and is typically filled with saline and flushed with heparin or heparinized saline. The sealed chamber **370** has a seal **372** along its perimeter to prevent leakage and the introduction of air to the chamber **370**. Any air in the chamber **370** may be bled from the chamber **370** by one or more luers **374** which pass through the main body **308** into the chamber **370** as illustrated in **FIG. 55**. In this embodiment, the handle **304** includes two such luers **374**, one on each side of the main body **308** (second luer symmetrically positioned on backside of main body **308** in **FIG. 55**, hidden from view). Referring now to **FIG. 56**, the sealed chamber **370** also has various additional seals, such as an actuator rod seal **376** which surrounds the actuator rod **64** where the actuator rod **64** enters the sealed chamber **370**, and a shaft seal **378** which surrounds the shaft **302** where the shaft **302** enters the sealed chamber **370**.

[**0234**] F. Lock Line Handle and Proximal Element Line Handle

[**0235**] As mentioned previously, the lock lines **92** may be may be extended, retracted, loaded with various amounts of tension or removed using the lock line handle **310**. Likewise, the proximal element lines **90** may be extended, retracted, loaded with various amounts of tension or removed using the proximal element line handle **312**. Both of these handles **310**, **312** may be similarly designed to manipulate the appropriate lines **90**, **92** passing therethrough.

[**0236**] **FIG. 57** illustrates an embodiment of a lock line handle **310** having lock lines **92** passing therethrough. The lock line handle **310** has a distal end **384**, a proximal end **382** and an elongate shaft **383** therebetween. The distal end **382** is positionable within the sealed chamber **370** so that the proximal end **382** extends out of the chamber **370**, beyond the main body **308**. The free ends of the lock lines **92** are disposed near the proximal end **382**, passing through the wall of the handle **310** near a threaded nub **390**. The handle **310** further includes a cap **388** which is positionable on the nub **309**. Internal threading with the cap **388** mates with the threading on the threaded nub **390** so that the cap **388** holds the free ends of the lock lines **92** between the cap **388** and the nub **390** and/or other portions of the handle **310** by friction. The lock lines **92** pass through a central lumen (not shown) of the elongate shaft **383**, extend through the sealed chamber **370** (as shown in **FIG. 56**) and extend through the shaft **302** to the locking mechanism **106**.

[**0237**] Disposed near the distal end **384** of the handle **310** is at least one wing **392**. In the embodiment of **FIG. 57**, two wings **392** are present, each wing **392** disposed on opposite sides of the elongate shaft **383**. The wings **392** extend radially outwardly and curve proximally so that a portion is parallel to the elongate shaft **383**, as shown. It may be appreciated that the wings **392** may alternatively have the shape of solid or continuous protrusions which extend radially and have a portion which is parallel to the elongate shaft **383**. The wings **392** are used to hold the lock line handle **310** in a desired position which in turn holds the lock under a desired load of tension, as will be described further below. The handle **310** also includes a finger grip **386** near the proximal end **382** which extends radially outwardly in alignment with the radial extension of the at least one wing **392**. Thus, the user may determine the orientation of the wings **392** within the sealed chamber **370** from the orientation of the finger grip **386** outside of the main body **308**. The finger grip **386** may also serve an ergonomic purpose to assist in manipulating the handle **310**.

[**0238**] The portion of the wings **392** parallel to the elongate shaft **383** have grooves or serrations **394**. The serrations **394** are used to apply tension to the lock lines **92**. As shown in **FIG. 57**A, the lock line handle **310** is positioned within a semi-tube **400** which is disposed within the sealed chamber **370**. The semi-tube **400** comprises a top half **402** and a bottom half **404**, each half **402**, **404** having grooves or serrations **406** which mate with the serrations **394** of the wings **392**. Thus, when the wings **392** are rotated to mate the serrations **394**, **406**, as shown in **FIG. 58**A, the elongate shaft **383** is held in place. Likewise, the wings **392** may be rotated, as shown in **FIG. 58**B, so that the wings **392** are disposed between the halves **402**, **404** and the serrations **394**, **406** are disengaged. In this position, the shaft **383** may be translated to apply or release tension in the lock lines **92**. Thus, tension in the lines **92** may be adjusted by rotating the shaft **383** to disengage the serrations **394**, **406**, translating the shaft **383** and then rotating the shaft **383** back to reengage the serrations **394**, **406**. Alternatively, the finger grip **386** may be pulled to apply tension to the lock lines **92**. Pulling the finger grip **386** translates the lock line handle **310** within the semi-tube **400**. Such translation is achievable due to angling of the serrations **394**, **406** and flexibility of wings **382**. However, the angling of the serrations **394**, **406** prevents translation in the opposite direction, i.e. by pushing the finger grip **386**. Therefore, to release tension from the lock lines **92**, the shaft **383** is rotated to disengage the serrations **394**, **406**, allowing translation of the shaft **383**, and then the shaft **383** is rotated back to reengage the serrations **394**, **406**.

[**0239**] To remove the lock lines **92**, the cap **388** is removed from the threaded nub **390** exposing the free ends of the lock lines **92**. If one lock line **92** is present having two free ends, continuous pulling on one of the free ends draws the entire length of lock line **92** out of the catheter **300**. If more than one lock line **92** is present, each lock line **92** will have two free ends. Continuous pulling on one of the free

ends of each lock line **92** draws the entire length of each lock line **92** out of the catheter **300**.

[**0240**] It may be appreciated that the proximal element line handle **312** has corresponding features to the lock line handle **310** and operates in the same manner as illustrated in FIGS. **57**A, **58**A-**58**B. It may also be appreciated that other mechanisms may be used for manipulating the lock lines **92** and proximal element lines **90**, such as including buttons, springs, levers and knobs.

[**0241**] G. Actuator Rod Control and Handle

[**0242**] The actuator rod **64** may be manipulated using the actuator rod control **314** and the actuator rod handle **316**. **FIG. 59** provides a cross-sectional view of a portion of the handle **304** which includes the actuator rod control **314** and the actuator rod handle **316**. The actuator rod handle **316** is located at the proximal end of the handle **314**. The actuator rod handle **316** is fixedly attached to the proximal end of the actuator rod **64**. The actuator rod **64** is inserted through a collet **426** which is disposed within a holder **428** as shown. The holder **428** has external threads **434** which mate with internal threads **432** of the actuator rod control **314**. Thus, rotation of the actuator rod control **314** causes the holder **428** to translate along the actuator rod control **314** by action of the threading, as will be described in more detail below. The actuator rod control **314** is rotateably coupled with the main body **308** of the handle **304** and is held in place by a lip **430**.

[**0243**] Referring to **FIG. 59**A, the actuator rod control **314** may be manually rotated in a clockwise or counter clockwise direction, as indicated by arrow **436**. Rotation of the actuator rod control **314** translates (extends or retracts) the actuator rod **64** to manipulate the distal elements **18** of the fixation device **14**. Specifically, rotation of the actuator rod control **314** causes the external threads **434** of the adjacent holder **428** to translate along the mated internal threads **432** of the actuator rod control **314**. Rotation of the holder **428** itself is prevented by holding pins **424** which protrude from the holder **428** and nest into grooves **438** in the main body **308** of the handle **304**. As the holder **428** translates, each holding pin **424** translates along its corresponding groove **438**. Since the collet **426** is attached to the holder **428**, the collet **426** translates along with the holder **428**. To simultaneously translate the actuator rod **64**, the actuator rod **64** is removably attached to the collet **426** by a pin **422**. The pin **422** may have any suitable form, including a clip-shape which partially wraps around the collet **426** as illustrated in **FIG. 59**. Thus, rotation of the actuator rod control **314** provides fine control of translation of the actuator rod **64** and therefore fine control of positioning the distal elements **18**.

[**0244**] Referring to **FIG. 59**B, removal of the pin **422**, as shown, allows disengagement of the actuator rod handle **316** and fixedly attached actuator rod **64** from the collet **426**. Once disengaged, the actuator rod **64** may be rotated, as indicated by arrow **440**, by manually rotating the actuator rod handle **316**. As described previously, rotation of the actuator rod **64** engages or disengages the threaded joiner **332** of the delivery catheter **300** from the threaded stud **74** of the fixation device **14**. This is used to attach or detach the fixation device **14** from the delivery catheter **300**. In addition, when the actuator rod **64** is in the disengaged state, the actuator rod **64** may optionally be retracted and optionally removed from the catheter **300** by pulling the actuator rod handle **316** and withdrawing the actuator rod **64** from the handle **304**.

[**0245**] Depending on the application, the location of the target site, and the approach selected, the devices of the invention may be modified in ways well known to those of skill in the art or used in conjunction with other devices that are known in the art. For example, the delivery catheter may be modified in length, stiffness, shape and steerability for a desired application. Likewise, the orientation of the fixation device relative to the delivery catheter may be reversed or otherwise changed. The actuation mechanisms may be changed to be driven in alternate directions (push to open, pull to close, or pull to open, push to close). Materials and designs may be changed to be, for example, more flexible or more rigid. And the fixation device components may be altered to those of different size or shape. Further, the delivery catheter of the present invention may be used to deliver other types of devices, particularly endovascular and minimally invasive surgical devices used in angioplasty, atherectomy, stent-delivery, embolic filtration and removal, septal defect repair, tissue approximation and repair, vascular clamping and ligation, suturing, aneurysm repair, vascular occlusion, and electrophysiological mapping and ablation, to name a few. Thus, the delivery catheter of the present invention may be used for applications in which a highly flexible, kink-resistant device is desirable with high compressive, tensile and torsional strength.

[**0246**] V. Multi-Catheter Guiding System

[**0247**] A. Overview of Guiding System

[**0248**] Referring to **FIG. 60**, an embodiment of a multi-catheter guiding system **1** of the present invention is illustrated. The system **1** comprises an outer guide catheter **1000**, having a proximal end **1014**, a distal end **1016**, and a central lumen **1018** therethrough, and an inner guide catheter **1020**, having a proximal end **1024**, distal end **1026** and central lumen **1028** therethrough, wherein the inner guide catheter **1020** is positioned coaxially within the central lumen **1018** of the outer guide catheter **1000**, as shown. The distal ends **1016**, **1026** of catheters **1000**, **1020**, respectively, are sized to be passable to a body cavity, typically through a body lumen such as a vascular lumen. Thus, the distal end **1016** preferably has an outer diameter in the range of approximately 0.040 in. to 0.500 in., more preferably in the range of 0.130 in. to 0.320 in. The central lumen **1018** is sized for the passage of the inner guide catheter **1020**; the distal end **1026** preferably has an outer diameter in the range of approximately 0.035 in. to 0.280 in., more preferably 0.120 in to 0.200 in. The central lumen **1028** is sized for the passage of a variety of devices therethrough. Therefore, the central lumen **1028** preferably has an inner diameter in the range of approximately 0.026 in. to 0.450 in., more preferably in the range of 0.100 in. to 0.180 in.

[**0249**] **FIG. 60** illustrates an interventional catheter **1030** positioned within the inner guide catheter **1020** which may optionally be included in system **1**, however other interventional devices may be used. The interventional catheter **1030** has a proximal end **1034** and a distal end **1036**, wherein an interventional tool **1040** is positioned at the distal end **1036**. In this embodiment, the interventional tool **1040** comprises a detachable fixation device or clip. Optionally, the interventional catheter **1030** may also include a nosepiece **1042** having a stop **1043**, as shown. The stop **1043** prevents the interventional tool **1040** from entering the central lumen **1028** of the inner guide catheter **1020**. Thus, the interven-

tional catheter **1030** may be advanced and retracted until the stop **1043** contacts the distal end **1026** of the inner guiding catheter **1020** preventing further retraction. This may provide certain advantages during some procedures. It may be appreciated that in embodiments which include such a stop **1043**, the interventional catheter **1030** would be pre-loaded within the inner guide catheter **1020** for advancement through the outer guiding catheter **1000** or both the interventional catheter **1030** and the inner guiding catheter **1020** would be pre-loaded into the outer guiding catheter **1000** for advancement to the target tissue. This is because the stop **1043** prevents advancement of the interventional catheter **1030** through the inner guiding catheter **1020**.

[**0250**] The outer guide catheter **1000** and/or the inner guide catheter **1020** are precurved and/or have steering mechanisms, embodiments of which will be described later in detail, to position the distal ends **1016**, **1026** in desired directions. Precurvature or steering of the outer guide catheter **1000** directs the distal end **1016** in a first direction to create a primary curve while precurvature and/or steering of the inner guide catheter **1020** directs distal end **1026** in a second direction, differing from the first, to create a secondary curve. Together, the primary and secondary curves form a compound curve. Advancement of the interventional catheter **1030** through the coaxial guide catheters **1000**, **1020** guides the interventional catheter **1030** through the compound curve toward a desired direction, usually in a direction which will allow the interventional catheter **1030** to reach its target.

[**0251**] Steering of the outer guide catheter **1000** and inner guide catheter **1020** may be achieved by actuation of one or more steering mechanisms. Actuation of the steering mechanisms is achieved with the use of actuators which are typically located on handles connected with each of the catheters **1000**, **1020**. As illustrated in **FIG. 60**, handle **1056** is connected to the proximal end **1014** of the outer guide catheter **1000** and remains outside of the patient's body during use. Handle **1056** includes steering actuator **1050** which may be used to bend, arc or reshape the outer guide catheter **1000**, such as to form a primary curve. Handle **1057** is connected to the proximal end (not shown) of the inner guide catheter **1020** and may optionally join with handle **1056** to form one larger handle, as shown. Handle **1057** includes steering actuator **1052** which may be used to bend, arc or reshape the inner guide catheter **1020**, such as to form a secondary curve and move the distal end **1026** of the inner guide catheter **1020** through an angle theta, as will be described in a later section.

[**0252**] In addition, locking actuators **1058**, **1060** may be used to actuate locking mechanisms to lock the catheters **1000**, **1020** in a particular position. Actuators **1050**, **1052**, **1058**, **1060** are illustrated as buttons, however it may be appreciated that these and any additional actuators located on the handles **1056**, **1057** may have any suitable form including knobs, thumbwheels, levers, switches, toggles, sensors or other devices. Other embodiments of the handles will be described in detail in a later section.

[**0253**] In addition, the handle **1056** may include a numerical or graphical display **1061** of information such as data indicating the position the catheters **1000**, **1020**, or force on actuators. It may also be appreciated that actuators **1050**, **1052**, **1058**, **1060** and any other buttons or screens may be disposed on a single handle which connects with both the catheters **1000**, **1020**.

[**0254**] B. Example Positions

[**0255**] FIGS. **61**A-**61**D illustrate examples of positions that the catheters **1000**, **1020** may hold. Referring to **FIG. 61**A, the outer guide catheter **1000** may be precurved and/or steered into a position which includes a primary curve **1100**. The primary curve **1100** typically has a radius of curvature **1102** in the range of approximately 0.125 in. to 1.000 in., preferably in the range of approximately 0.250 in. to 0.500 in. or forms a curve in the range of approximately 0° to 120°. As shown, when the position includes only a primary curve **1100**, the distal end **16** lies in a single plane X. An axis x, transversing through the center of the central lumen **18** at the distal end **16**, lies within plane X.

[**0256**] Referring to **FIG. 61**B, the inner guide catheter **1020** extends through the central lumen **1018** of the outer guide catheter **1000**. The inner guide catheter **1020** may be precurved and/or steered into a position which includes a secondary curve **1104**. The secondary curve **1104** typically has a radius of curvature **10600** in the range of approximately 0.050 in. to 0.750 in., preferably in the range of approximately 0.125 in. to 0.250 in. or forms a curve in the range of approximately 0° to 180°. The secondary curve **1104** can lie in the same plane as the primary curve **1100**, plane X, or it can lie in a different plane, such as plane Z as shown. In this example, plane Z is substantially orthogonal to plane X. Axis z, transversing through the center of the central lumen **1028** of the inner guide catheter **1020** at the distal end **1026**, lies within plane Z. In this example, axis x and axis z are at substantially 90 degree angles to each other; however, it may be appreciated that axis x and axis z may be at any angle in relation to each other. Also, although in this example the primary curve **1100** and the secondary curve **1104** lie in different planes, particularly in substantially orthogonal planes, the curves **1100**, **1104** may alternatively lie in the same plane.

[**0257**] Referring now to **FIG. 61**C, the inner guide catheter **1020** may be further manipulated to allow the distal end **1026** to move through an angle theta **1070**. The angle theta **1070** is in the range of approximately −180° to +180°, typically in the range of −90° to +90°, possibly in the range of −60' to +60°, −45° to +45°, −30° to +30° or less. As shown, the angle theta **1070** lies within a plane Y. In particular, axis y, which runs through the center of the central lumen **1028** at the distal end **1026**, forms the angle theta **1070** with axis z. In this example, plane Y is orthogonal to both plane X and plane Z. Axes x, y, z all intercept at a point within the central lumen **1028** which also coincides with the intersection of planes X, Y, Z.

[**0258**] Similarly, **FIG. 61D** illustrates movement of the distal end **1026** through an angle theta **1070** on the opposite side of axis z. Again, the angle theta **1070** is measured from the axis z to the axis y, which runs through the center of the central lumen **1016** at the distal end **1026**. As shown, the angle theta **1070** lies in plane Y. Thus, the primary curve **1100**, secondary curve **1104**, and angle theta **1070** can all lie in different planes, and optionally in orthogonal planes. However, it may be appreciated that the planes within which the primary curve **1100**, secondary curve **1104** and angle

theta **1070** lie may be mutually dependent and therefore would allow the possibility that some of these lie within the same plane.

[**0259**] In addition, the outer guide catheter **1000** may be preformed and/or steerable to provide additional curves or shapes. For example, as illustrated in **FIG. 62**A, an additional curve **1110** may be formed by the outer guide catheter **1000** proximal to the primary curve **1100**. In this example, the curve **1110** provides lift or raises the distal end **1016** of the outer guide catheter **1000**, which in turn raises the distal end **1026** of the inner guide catheter **1020**. Such lifting is illustrated in **FIG. 62B**. Here, the system **1** is shown prior to lifting in dashed line wherein the axis y" passes through the intersection of axis z and axis x'. After application of curve **1110**, the distal portion of the system **1** is lifted in the direction of axis z so that axis x' is raised to axis x" and axis y' is raised to axis y". This raises distal end **1026** to a desired height.

[**0260**] The articulated position of the multi-catheter guiding system **1** illustrated in FIGS. **61**A-**61**D and FIGS. **62**A-**62**B is particularly useful for accessing the mitral valve. FIGS. **63**A-**63**D illustrate a method of using the system **1** for accessing the mitral valve MV. To gain access to the mitral valve, the outer guide catheter **1000** may be tracked over a dilator and guidewire from a puncture in the femoral vein, through the inferior vena cava and into the right atrium. As shown in **FIG. 63**A, the outer guide catheter **1000** may be punctured through a fossa F in the interatrial septum S. The outer guide catheter **1000** is then advanced through the fossa F and curved by the primary curve **1100** so that the distal end **1016** is directed over the mitral valve MV. Again, it may be appreciated that this approach serves merely as an example and other approaches may be used, such as through the jugular vein, femoral artery, port access or direct access, to name a few. Positioning of the distal end **1016** over the mitral valve MV may be accomplished by precurvature of the outer guide catheter **1000**, wherein the catheter **1000** assumes this position when the dilator and guidewire are retracted, and/or by steering of the outer guide catheter **1000** to the desired position. In this example, formation of the primary curve **1100** moves the distal end **1016** within a primary plane, corresponding to previous plane X, substantially parallel to the valve surface. This moves the distal end **1016** laterally along the short axis of the mitral valve MV, and allows the distal end **1016** to be centered over the opening **0** between the leaflets LF.

[**0261**] Referring to **FIG. 63**B, the inner guide catheter **1020** is advanced through the central lumen **1018** of the outer guide catheter **1000** and the distal end **1026** is positioned so that the central lumen **1028** is directed toward the target tissue, the mitral valve MV. In particular, the central lumen **1028** is to be directed toward a specific area of the mitral valve MV, such as toward the opening **0** between the valve leaflets LF, so that a particular interventional procedure may be performed. In **FIG. 63**B, the inner guide catheter **1020** is shown in a position which includes a secondary curve **1104** in a secondary plane, corresponding to previous plane Z. Formation of the secondary curve **1104** moves the distal end **1026** vertically and angularly between the commissures C, directing the central lumen **1028** toward the mitral valve MV. In this position an interventional device or catheter **1030** which is passed through the central lumen **1028** would be directed toward and/or through the opening **0**. Although the primary curve **1100** and the secondary curve **1104** may be varied to accommodate different anatomical variations of the valve MV and different surgical procedures, further adjustment may be desired beyond these two curvatures for proper positioning of the system **1**.

[**0262**] Referring to **FIG. 63**C, the distal end **1026** of the inner guide catheter **1020** may be positioned through an angle theta **1070**. This moves the distal end **1026** vertically and angularly through a theta plane, corresponding to previous plane Y. Movement of the distal end **1026** through the angle theta **1070** in either direction is shown in dashed line in **FIG. 63B**. Such movement can be achieved by precurvature and/or by steering of the catheter **1020**. Consequently, the central lumen **1028** can be directed toward the mitral valve MV within a plane which differs from the secondary plane. After such movements, the inner guide catheter **1020** will be in a position so that the opening of the central lumen **1028** at the end **1016** faces the desired direction. In this case, the desired direction is toward the center of and orthogonal to the mitral valve.

[**0263**] In some instances, it is desired to raise or lower the distal end **1026** so that it is at a desired height in relation to the mitral valve MV. This may be accomplished by precurvature and/or by steering of the outer guide catheter **1000** to form additional curve **1110**. Generally this is used to lift the distal end **1026** above the mitral MV wherein such lifting was illustrated in **FIG. 62B**.

[**0264**] When the curvatures in the catheters **1000**, **1020** are formed by steering mechanisms, the steering mechanisms may be locked in place by a locking feature. Locking can provide additional stiffness and stability in the guiding system **1** for the passage of interventional devices or catheters **1030** therethrough, as illustrated in **FIG. 60**. The interventional catheter **1030** can be passed through the central lumen **1028** toward the target tissue, in this case the mitral valve MV. Positioning of the distal end **1026** over the opening **0**, as described above, allows the catheter **1030** to pass through the opening **0** between the leaflets LF if desired, as shown in **FIG. 63D**. At this point, any desired procedure may be applied to the mitral valve for correction of regurgitation or any other disorder.

[**0265**] C. Steering Mechanisms

[**0266**] As described previously, the curvatures may be formed in the catheters **1000**, **1020** by precurving, steering or any suitable means. Precurving involves setting a specific curvature in the catheter prior to usage, such as by heat setting a polymer or by utilizing a shape-memory alloy. Since the catheters are generally flexible, loading of the catheter on a guidewire, dilator obturator or other introductory device straightens the catheter throughout the curved region. Once the catheter is positioned in the anatomy, the introductory device is removed and the catheter is allowed to relax back into the precurved setting.

[**0267**] To provide a higher degree of control and variety of possible curvatures, steering mechanisms may be used to create the curvatures and position the catheters. In some embodiments, the steering mechanisms comprise cables or pullwires within the wall of the catheter. As shown in **FIG. 64**A, the outer guide catheter **1000** may include a pullwire **1120** slidably disposed in lumens within the wall of the catheter **1000** extending to the distal end **1016**. By applying

tension to the pullwire **1120** in the proximal direction, the distal end **1016** curves in the direction of the pullwire **1120** as illustrated by arrow **1122**. Likewise, as shown in **FIG. 64**A, placement of the pullwire **1120** along the opposite side of the catheter **1000** will allow the distal end **1016** to curve in the opposite direction, as illustrated by arrow **1124**, when tension is applied to the pullwire **1120**. Thus, referring to **FIG. 64**C, diametrically opposing placement of pullwires **1120** within the walls of the catheter **1000** allows the distal end **1016** to be steered in opposite directions. This provides a means of correcting or adjusting a curvature. For example, if tension is applied to one pullwire to create a curvature, the curvature may be lessened by applying tension to the diametrically opposite pullwire. Referring now to **FIG. 64**D, an additional set of opposing pullwires **1120'** may extend within the wall of the catheter **1000** as shown. This combination of pullwires **1120, 1120'** allows curvature of the distal end in at least four directions illustrated by arrows **1122, 1124, 1126, 1128**. In this example, pullwires **1120** create the primary curve **1100** of the outer guide catheter **1000** and the pullwires **1120'** create the lift. It may be appreciated that FIGS. **64**A-**64**D also pertain to the inner guide catheter **1020**. For example, in **FIG. 64**D, pullwires **1120** may create the secondary curve **1104** of the inner guide catheter **1020** and the pullwires **1120'** create the angle theta **1070**.

[**0268**] Such pullwires **1120** and/or pullwires **1120'** and associated lumens may be placed in any arrangement, singly or in pairs, symmetrically or nonsymmetrically and any number of pullwires may be present. This may allow curvature in any direction and about various axes. The pullwires **1120, 1120'** may be fixed at any location along the length of the catheter by any suitable method, such as gluing, tying, soldering, or potting, to name a few. When tension is applied to the pullwire, the curvature forms from the point of attachment of the pullwire toward the proximal direction. Therefore, curvatures may be formed throughout the length of the catheter depending upon the locations of the points of attachment of the pullwires. Typically, however, the pullwires will be attached near the distal end of the catheter, optionally to an embedded tip ring **280**, illustrated in **FIG. 64**E. As shown, the pullwire **1120** passes through an orifice **286** in the tip ring **280**, forms a loop shape and then passes back through the orifice **286** and travels back up through the catheter wall (not shown). In addition, the lumens which house the pullwires may be straight, as shown in FIGS. **64**A-**64**D, or may be curved.

[**0269**] D. Catheter Construction

[**0270**] The outer guide catheter **1000** and inner guide catheter **1020** may have the same or different construction which may include any suitable material or combination of materials to create the above described curvatures. For clarity, the examples provided will be in reference to the outer guide catheter **1000**, however it may be appreciated that such examples may also apply to the inner guide catheter **1020**.

[**0271**] In embodiments in which the catheter is precurved rather than steerable or in addition to being steerable, the catheter **1000** may be comprised of a polymer or copolymer which is able to be set in a desired curvature, such as by heat setting. Likewise, the catheter **1000** may be comprised of a shape-memory alloy.

[**0272**] In embodiments in which the catheter is steerable, the catheter **1000** may be comprised of one or more of a variety of materials, either along the length of the catheter **1000** or in various segments. Example materials include polyurethane, Pebax, nylon, polyester, polyethylene, polyimide, polyethylenetelephthalate(PET), polyetheretherketone (PEEK). In addition, the walls of the catheter **1000** may be reinforced with a variety of structures, such as metal braids or coils. Such reinforcements may be along the length of the catheter **1000** or in various segments.

[**0273**] For example, referring to **FIG. 65**A, the catheter **1000** may have a proximal braided segment **1150**, a coiled segment **1152** and distal braided segment **1154**. The proximal braided segment **1150** provides increased column strength and torque transmission. The coiled segment **1152** provides increased steerability. The distal braided segment **1154** provides a blend of steerability and torque/column strength. In another example, referring to **FIG. 65**B, the outer guiding catheter **1000** has a proximal double-layer braided segment **1151** and a distal braided segment **1154**. Thus, the proximal double-layer segment **1151** comprises a multi-lumen tube **1160** (having steering lumens **1162** for pullwires, distal ends of the steering lumens **1162** optionally embedded with stainless steel coils for reinforcement, and a central lumen **1163**), an inner braided layer **1164**, and an outer braided layer **1166**, as illustrated in the cross-sectional view of **FIG. 65C**. Similarly, **FIG. 65D** provides a cross-sectional view of the distal braided segment **1154** comprising the multi-lumen tube **1160** and a single braided layer **1168**. In a further example, referring to **FIG. 65**E, the inner guiding catheter **1020** comprises a multi-lumen tube **1160** without reinforcement at its proximal end, a single braided layer middle segment **1170** and a single braided layer distal segment **1171**. Each of the single braided layer segments **1170, 1171** have a multi-lumen tube **1160** and a single layer of braiding **1168**, as illustrated in cross-sectional view **FIG. 65F**. However, the segments **1170, 1171** are comprised of polymers of differing durometers, typically decreasing toward the distal end.

[**0274**] **FIG. 65G** illustrates an other example of a cross-section of a distal section of an outer guiding catheter **1000**. Here, layer **1130** comprises 55D Pebax and has a thickness of approximately 0.0125 in. Layer **1131** comprises a 30 ppi braid and has a thickness of approximately 0.002 in. by 0.0065 in. Layer **1132** comprises 55D Pebax and has a thickness of approximately 0.006 in. Layer **1133** comprises 30 ppi braid and has a thickness of approximately 0.002 in by 0.0065 in. And finally, layer **1134** comprises Nylon 11 and includes steering lumens for approximately 0.0105 in. diameter pullwires **1120**. Central lumen **1163** is of sufficient size for passage of devices.

[**0275**] FIGS. **65**H-**65**I illustrate additional examples of cross-sections of an inner guiding catheter **1020, FIG. 651** illustrating a cross-section of a portion of the distal end and **FIG. 65I** illustrating a cross-section of a more distal portion of the distal end. Referring to **FIG. 65**H, layer **1135** comprises 40D polymer and has a thickness of approximately 0.0125 in. Layer **1136** comprises a 30 ppi braid and has a thickness of approximately 0.002 in. by 0.0065 in. Layer **1137** comprises 40D polymer and has a thickness of approximately 0.006 in. Layer **1138** comprises a 40 D polymer layer and has a thickness of approximately 0.0035 in. And finally, layer **1139** comprises a 55D liner. In addition, coiled steering lumens are included for approximately 0.0105 in. diameter pullwires **1120**. And, central lumen **1163**

is of sufficient size for passage of devices. Referring to **FIG. 651**, layer **1140** comprises a 40D polymer, layer **1141** comprises a 35D polymer, layer **1142** comprises a braid and layer **1143** comprises a liner. In addition, coiled steering lumens **1144** are included for pullwires. And, central lumen **1163** is of sufficient size for passage of devices.

[**0276**] FIGS. **66A-66C** illustrate an embodiment of a keying feature which may be incorporated into the catheter shafts. The keying feature is used to maintain relationship between the inner and outer guide catheters to assist in steering capabilities. As shown in **FIG. 66A**, the inner guide catheter **1020** includes one or more protrusions **1400** which extend radially outwardly. In this example, four protrusions **1400** are present, equally spaced around the exterior of the catheter **1020**. Likewise, the outer guide catheter **1000** includes corresponding notches **1402** which align with the protrusions **1400**. Thus, in this example, the catheter **1000** includes four notches equally spaced around its central lumen **1018**. Thus, the inner guide catheter **1020** is able to be translated within the outer guide catheter **1000**, however rotation of the inner guide catheter **1020** within the outer guide catheter **1000** is prevented by the keying feature, i.e. the interlocking protrusions **1400** and notches **1402**. Such keying helps maintain a known correlation of position between the inner guide catheter **1020** and outer guide catheter **1000**. Since the inner and outer guide catheters **1020**, **1000** form curvatures in different directions, such keying is beneficial to ensure that the compound curvature formed by the separate curvatures in the inner and outer guide catheters **1020**, **1000** is the compound curvature that is anticipated. Keying may also increase stability wherein the curvatures remain in position reducing the possibility of compensating for each other.

[**0277**] **FIG. 66B** illustrates a cross-sectional view of the outer guiding catheter **1000** of **FIG. 66A**. Here, the catheter **1000** includes a notched layer **1404** along the inner surface of central lumen **1018**. The notched layer **1404** includes notches **1402** in any size, shape, arrangement and number. Optionally, the notched layer **1404** may include lumens **1406**, typically for passage of pullwires **1120**. However, the lumens **1406** may alternatively or in addition be used for other uses. It may also be appreciated that the notched layer **1404** may be incorporated into the wall of the catheter **1000**, such as by extrusion, or may be a separate layer positioned within the catheter **1000**. Further, it may be appreciated that the notched layer **1404** may extend the entire length of the catheter **1000** or one or more portions of the length of the catheter **1000**, including simply a small strip at a designated location along the length of the catheter **1000**.

[**0278**] **FIG. 66C** illustrates a cross-sectional view of the inner guiding catheter **1020** of **FIG. 66A**. Here, the catheter **1020** includes protrusions **1400** along the outer surface of the catheter **1020**. The protrusions **1400** may be of any size, shape, arrangement and number. It may be appreciated that the protrusions **1400** may be incorporated into the wall of the catheter **1020**, such as by extrusion, may be included in a separate cylindrical layer on the outer surface of the catheter **1020**, or the protrusions **1400** may be individually adhered to the outer surface of the catheter **1020**. Further, it may be appreciated that the protrusions **1400** may extend the entire length of the catheter **1000** or one or more portions of the length of the catheter **1020**, including simply a small strip at a designated location along the length of the catheter **1020**.

[**0279**] Thus, the keying feature may be present along one or more specific portions of the catheters **1000**, **1020** or may extend along the entire length of the catheters **1000**, **1020**. Likewise, the notches **1402** may extend along the entire length of the outer guiding catheter **1020** while the protrusions **1400** extend along discrete portions of the inner guiding catheter **1000** and vice versa. It may further be appreciated that the protrusions **1400** may be present on the inner surface of the outer guiding catheter **1000** while the notches **1402** are present along the outer surface of the inner guiding catheter **1020**.

[**0280**] Alternatively or in addition, one or more steerable portions of the catheter **1000** may comprise a series of articulating members **1180** as illustrated in **FIG. 67A**. Exemplary embodiments of steerable portions of catheters comprising such articulating members **1180** are described in U.S. patent application Ser. No. _____, (Attorney Docket No. 020489-001200US) incorporated herein by reference for all purposes. **FIG. 67B** illustrates the outer guide catheter **1000** having a steerable portion comprising articulating members **1180** at its distal end **1016**.

[**0281**] Briefly, referring to **FIG. 67A**, each articulating member **1180** may have any shape, particularly a shape which allows interfitting or nesting as shown. In addition, it is desired that each member **1180** have the capability of independently rotating against an adjacent articulating member **1180**. In this embodiment, the articulating members **1180** comprise interfitting domed rings **1184**. The domed rings **1184** each include a base **1188** and a dome **1186**. The base **1188** and dome **1186** have a hollow interior which, when the domed rings **1184** are interfit in a series, forms a central lumen **1190**. In addition, the dome **1186** allows each articulating member **1180** to mate against an inner surface of an adjacent domed ring **1184**.

[**0282**] The interfitting domed rings **1184** are connected by at least one pullwire **1120**. Such pullwires typically extend through the length of the catheter **1000** and at least one of the interfitting domed rings **1184** to a fixation point where the pullwire **1120** is fixedly attached. By applying tension to the pullwire **1120**, the pullwire **1120** arcs the series of interfitting domed rings **1184** proximal to the attachment point to form a curve. Thus, pulling or applying tension on at least one pullwire, steers or deflects the catheter **1000** in the direction of that pullwire **1120**. By positioning various pullwires **1120** throughout the circumference of the domed rings **1184**, the catheter **1000** may be directed in any number of directions.

[**0283**] Also shown in **FIG. 67A**, each interfitting domed ring **1184** may comprise one or more pullwire lumens **1182** through which the pullwires **1120** are threaded. Alternatively, the pullwires **1120** may be threaded through the central lumen **1190**. In any case, the pullwires are attached to the catheter **1000** at a position where a desired curve is to be formed. The pullwires **1120** may be fixed in place by any suitable method, such as soldering, gluing, tying, welding or potting, to name a few. Such fixation method is typically dependent upon the materials used. The articulating members **1180** may be comprised of any suitable material including stainless steel, various metals, various polymers or co-polymers. Likewise the pullwires **1120** may be comprised of any suitable material such as fibers, sutures, metal wires, metal braids, or polymer braids.

[0284] E. Handles

[0285] As mentioned previously, manipulation of the guide catheters **1000**, **1020** is achieved with the use of handles **1056**, **1057** attached to the proximal ends of the catheters **1000**, **1020**. **FIG. 68** illustrates a preferred embodiment of handles **1056**, **1057**. As shown, handle **1056** is attached to the proximal end **1014** of outer guide catheter **1000** and handle **1057** is attached to the proximal end **1024** of inner guide catheter **1020**. Inner guide catheter **1020** is inserted through handle **1056** and is positioned coaxially within outer guide catheter **1000**. In this embodiment, the handles **1056**, **1057** are not linked together as shown in the embodiment illustrated in **FIG. 60**. It may be appreciated that such handles **1056**, **1057** may alternatively be connected by external connecting rods, bars or plates or by an additional external stabilizing base. An embodiment of a stabilizing base will be described in a later section. Referring back to **FIG. 68**, interventional catheter is inserted through handle **1057** and is positioned coaxially within inner guide catheter **1020** and outer guide catheter **1000**.

[0286] Each handle **1056**, **1057** includes two steering knobs **1300***a*, **1300***b* emerging from a handle housing **1302** for manipulation by a user. Steering knobs **1300***a* are disposed on a side of the housing **1302** and steering knobs **1300***b* are disposed on a face of the housing **1302**. However, it may be appreciated that such placement may vary based on a variety of factors including type of steering mechanism, size and shape of handle, type and arrangement of parts within handle, and ergonomics to name a few.

[0287] **FIG. 69** illustrates the handles **1056**, **1057** of **FIG. 68** with a portion of the housing **1302** removed to reveal the assemblies of the handles. Each knob **1300***a*, **1300***b* controls a steering mechanism which is used to form a curvature in the attached catheter. Each steering mechanism includes a hard stop gear assembly **1304** and a friction assembly **1306**. Tension is applied to one or more pullwires by action of the hard stop gear assembly to form a curve in a catheter. Tension is maintained by the friction assembly. When tension is released from the one or more pullwires the catheter returns to a straightened position.

[0288] **FIG. 70** illustrates steering mechanisms within a handle wherein the housing **1302** is removed for clarity. Here, steering knob **1300***a* is attached to a hard stop gear assembly **1304** and a friction assembly (not in view) and steering knob **1300***b* is attached to a separate hard stop gear assembly **1304** and friction assembly **1306**. Steering knob **1300***a* is attached to a knob post **1318** which passes through a base **1308**, terminating in a knob gear wheel **1310**. The knob gear wheel **1310** actuates the hard stop gear assembly **1304**, thereby applying tension to one or more pullwires **1120**.

[0289] The knob gear wheel **1310** is a toothed wheel that engages a disk gear wheel **1312**. Rotation of the steering knob **1300***a* rotates the knob post **1318** and knob gear wheel **1310** which in turn rotates the disk gear wheel **1312**. Rotation of the disk gear wheel **1312** applies tension to one or more pullwires extending through the attached catheter, in this example the outer guiding catheter **1000**. As shown, the outer guiding catheter **1000** passes through the base **1308**, wherein one or more pullwires **1120** extending through the catheter **1000** are attached to the disk **1314**. Such attachment is schematically illustrated in **FIG. 71**. Catheter **1000** is shown passing through base **1308**. A pullwire **1120** passing through a steering lumen **1162** in the catheter **1000** emerges from the wall of the catheter **1000**, passes through an aperture **1320** in the disk **1314** and is attached to an anchor peg **1316** on the disk **1314**. Rotation of the disk **1314** (indicated by arrow **1328**) around disk post **1315** by action of the disk gear wheel **1312**, applies tension to the pullwire **1120** by drawing the pullwire **1120** through the aperture **1320** and wrapping the pullwire **1120** around the disk **1314** as it rotates. Additional rotation of the disk **1314** applies increasing tension to the pullwire **1120**. To limit the amount of tension applied to the pullwire **1120**, to limit curvature of the catheter and/or to avoid possible breakage of the pullwire **1120**, the rotation of the disk **1314** may be restricted by hard stop peg **1322** which is attached to the disk **1314** and extends into the base **1308**.

[0290] FIGS. **72**A-**72**B illustrate how the hard stop peg **1322** is used to restrict rotation of disk **1314**. FIGS. **72**A-**72**B provide a top view, wherein the disk **1314** is disposed on the base **1308**. The anchor peg **1316** is shown with the pullwire **1120** thereattached. A groove **1326** is formed in the base **1308** beneath the disk **1314** and forms an arc shape. The hard stop peg **1322** extends from the disk **1314** into the groove **1326** in the base **1308**. Referring now to **FIG. 72**B, rotation of the disk **1314** around knob post **1318**, indicated by arrow **1330**, draws the pullwire **1120** through the aperture **1320** as previously described, wrapping the pullwire **1120** around the disk **1314**. As the disk **1314** rotates, the hard stop peg **1322** follows along the groove **1326**, as shown. The disk **1314** continues rotating until the hard stop peg **1322** reaches a hard stop **1324**. The hard stop **1324** is positioned in the groove **1326** and prevents further passage of the hard stop peg **1322**. Thus, disk **1314** rotation may be restricted to any degree of rotation less than or equal to 360 degrees by positioning of the hard stop **1324**.

[0291] In some instances, it is desired to restrict rotation of the disk **1314** to a degree of rotation which is more than 360 degrees. This may be achieved with another embodiment of the hard stop gear assembly **1304**. Referring now to FIGS. **73**A-**73**B, a portion of such a hard stop gear assembly **1304** is shown. **FIG. 73A** illustrates the base **1308** and the disk post **1315** positioned therethrough. Also shown in the base **1308** is an aperture **1334** through which the knob post **1318**, knob gear wheel **1310** and friction assembly **1306** pass, and a passageway **1336** through which the catheter **1000** passes. In this embodiment of the hard stop gear assembly **1304**, a groove **1326** is also present in an arc shape around the disk post **1315**, however a ball **1332** is positioned in the groove **1326** rather than a hard stop peg **1322**. Disk **1314** is positioned over the groove **1326** and the ball **1332** as shown in **FIG. 73B**. The disk **1314**, illustrated in **FIG. 73**C, has a groove **1356** in its surface which is positioned adjacent to the base **1308**, the groove **1356** having an arc shape similar to the groove **1326** in the base **1308**. The ball **1332** is not fixedly attached to the base **1308** or the disk **1314** and is therefore free to move along the channel formed by the groove **1326** in the base **1308** and the groove in the disk **1314**.

[0292] FIGS. **74**A-**74**F illustrate how rotation of the disk **1314** may be restricted by the ball **1332** to a degree of rotation which is more than 360 degrees. FIGS. **74**A-**74**F illustrate the groove **1326** in the base **1308** wherein the groove **1326** has an arc shape around disk post **1315**. The

groove **1326** does not form a complete circle; a first groove end **1350***a* and a second groove end **1350***b* form a wall which prevent passage of the ball **1332**. It may be appreciated that the groove ends **1350***a*, **1350***b* may be any distance apart, shortening the length of the groove **1326** by any amount, and allowing the ball **1332** movement, and hence catheter deflection, to be adjusted to any desired amount. To begin, referring to **FIG. 74**A, the ball **1332** is positioned within the groove **1326** near the first groove end **1350***a*. The disk **1314** has a matching groove **1352** (shape illustrated in dashed line) including a first groove end **1354***a* and a second groove end **1354***b*. The disk **1314** is positioned over the ball **1332** so that the ball **1332** is near the second groove end **1354***b*.

[**0293**] Referring now to **FIG. 74**B, the disk **1314** may be rotated while the ball **1332** remains in place. Here, the disk **1314** has rotated 90 degrees, as indicated by arrow **36000** and the position of the groove ends **1354***a*, **1354***b*. Referring now to **FIG. 74**C, the disk **1314** may be further rotated while the ball **1332** remains in place. Here, the disk **1314** has rotated 270 degrees, as indicated by arrow **36000** and the position of the groove ends **1354***a*, **1354***b*. The disk **1314** may continue rotating to 360 degrees, as shown in **FIG. 74**D, indicated by arrow **36000**. Here, the first groove end **1354***a* in the disk **1314** has contacted the ball **1332** and pushes the ball **1332** along groove **1326** in the base. Referring now to **FIG. 74**E, the disk **1314** may be further rotated while the ball **1332** is pushed along the groove **1326** in the base **1308** by the first groove end **1354***a* in the disk **1314**. Here, the disk **1314** is shown to have rotated 540 degrees. Referring to **FIG. 74**F, the disk **1314** rotates until the ball **1332** reaches the second groove end **1350***b* of the base **1308**, providing a hard stop. In this position, the ball **1332** is held between the first groove end **1354***a* of the disk **1314** and the second groove end **1350***b* of the base **1308** and further rotation of the disk **1314** is prevented. Thus, the disk **1314** was rotated approximately 660 degrees in this example. Any maximum degree of rotation may be set by positioning of groove ends **1350***a*, **1350***b* and/or groove ends **1354***a*, **1354***b*. Additionally, in some embodiments, rotation can be limited by adding more than one ball **1332** to the groove **1326**, for example, two, three, four, five, six, seven, eight, nine, ten or more balls may be used to limit travel and hence curvature.

[**0294**] It may be appreciated that one or more pullwires **1120** are attached to the disk **1314** in a manner similar to that illustrated in **FIG. 71**. Therefore, as the disk **1314** rotates, around disk post **1315** by action of the disk gear wheel **1312**, tension is applied to the pullwire **1120** by drawing the pullwire **1120** through the aperture **1320** and wrapping the pullwire **1120** around the disk **1314** as it rotates. Additional rotation of the disk **1314** applies increasing tension to the pullwire **1120**. Restriction of rotation as described above limits the amount of tension applied to the pullwire **1120**, to limit curvature of the catheter and/or to avoid possible breakage of the pullwire **1120**.

[**0295**] As mentioned, each steering mechanism includes at least a hard stop gear assembly **1304** and a friction assembly **1306**. As described above, tension is applied to one or more pullwires by action of the hard stop gear assembly to form a curve in a catheter. Tension is maintained by the friction assembly. **FIG. 75** illustrates an embodiment of a friction assembly **1306**. The friction assembly **1306** essentially holds a steering knob, in this example steering knob **1300***b*, and the associated knob post **1318** in a rotated position. Here, rotation of the knob **1300***b* and post **1318** rotates attached knob gear wheel **1310**. The knob gear wheel **1310** actuates the hard stop gear assembly **1304**, thereby applying tension to one or more pullwires **1120**. The knob gear wheel **1310** is a toothed wheel that engages a disk gear wheel **1312**. Rotation of the steering knob **1300***b* rotates the knob post **1318** and knob gear wheel **1310** which in turn rotates the disk gear wheel **1312**. Rotation of the disk gear wheel **1312** applies tension to one or more pullwires extending through the attached catheter, in this example the outer guiding catheter **1000**.

[**0296**] The steering knob **1300***b* and knob post **1318** are held in a rotated position by friction provided by a frictional pad **1370**. The frictional pad **1370** is positioned between ring **1372** attached to the knob post **1318** and a plate **1374** attached to the base **1308**. The knob post **1318** extends from the knob **1300***b* through the ring **1372**, the frictional pad **1370** and then the plate **1374**. The plate **1374** has internal threads which mate with threads on the knob post **1318**. As the knob post **1318** rotates, the threads on the post **1318** advance through the threads on the plate **1374**. This draws the ring **1372** closer to the plate **1374**, compressing the frictional pad **1370** therebetween. Frictional pad **1370** may be comprised of any O-ring or sheet material with desirable frictional and compressibility characteristics, such as silicone rubber, natural rubber or synthetic rubbers, to name a few. In preferred embodiments, an EPDM rubber O-ring is used. Reverse rotation of the knob post **1318** is resisted by friction of the frictional pad **1370** against the ring **1372**. The higher the compression of the frictional pad **1370** the stronger the frictional hold. Therefore, as the steering knob **1300***b* is rotated and increasing amounts of tension are applied to the pullwires **1120**, increasing amounts of friction are applied to the ring **1372** to hold the knob **1300***b* in place.

[**0297**] Manual reverse rotation of the steering knob **1300***b* releases tension on the pullwires **1120** and draws the ring **1372** away from the plate **1374** thereby reducing the frictional load. When tension is released from the pullwires **1120** the catheter **1000** returns toward a straightened position.

[**0298**] It may be appreciated that each handle **1056**, **1057** includes a steering mechanism for each curve to be formed in the attached catheter. Thus, as shown in **FIG. 69**, handle **1056** includes a steering mechanism to form the primary curve **1100** in outer guiding catheter **1000** and a steering mechanism to form the additional curve **1110**. Likewise, handle **1057** includes a steering mechanism to form the secondary curve **1104** in inner guiding catheter **1020** and a steering mechanism to form the angle theta **1070**.

[**0299**] Some curves, such as the primary curve **1100**, secondary curve **1104** and additional curve **1110** each typically vary in curvature between a straight configuration and a curved configuration in a single direction. Such movement may be achieved with single set of a hard stop gear assembly **1304** and a friction assembly **1306**. However, other curves, such as the angle theta **1070**, may be formed in two directions as shown in FIGS. **61**C-**61**D. Such movement is achieved with two sets of the hard stop gear assembly **1304** and the friction assembly **1306**, each set controlling curvature in a single direction.

[0300] **FIG. 75** illustrates the presence of an additional set of the friction assembly **1306'**. One or more pullwires **1120'**, such as an opposing set as illustrated in **FIG. 64**D, extending within the wall of the catheter **1000** are attached to the disk **1314'** in the same manner as pullwires **1120** are attached to disk **1314**. The disks **1314**, **1314'** are arranged so that rotation of steering knob **1300***b* in one direction applies tension to the pullwires **1120** via disk **1314** and rotation of steering knob **1300***b* in the opposite direction applies tension to the pullwires **1120'** via disk **1314'**. Likewise, the additional friction assembly **1306'** is shown having a ring **1372'** attached to the knob post **1318** and a frictional pad **1370'** disposed between the ring **1372'** and the opposite side of the plate **1374**. Therefore, as rotation of the steering knob **1300***b* in the opposite direction applies tension to the pullwires **1120'** via disk **1314'**, the frictional pad **1370'** applies tension to the ring **1372'** holding the knob post **1318'** in place.

[0301] It may be appreciated that various other mechanisms may be used for tensioning and holding pullwires **1120** in place. Example mechanisms that may alternatively be used include clutches, ratchets, levers, knobs, rack and pinions, and deformable handles, to name a few.

[0302] F. Interventional System

[0303] **FIG. 76** illustrates an embodiment of an interventional system **3** of the present invention. An embodiment of the multi-catheter guiding system **1** of the present invention is shown comprising an outer guide catheter **1000**, having a proximal end **1014** and a distal end **1016**, and an inner guide catheter **1020**, having a proximal end **1024** and a distal end **1026**, wherein the inner guide catheter **1020** is positioned coaxially within the outer guide catheter **1000**, as shown. In addition, a hemostatic valve **1090** is disposed within handle **1056** or external to handle **1056** as shown to provide leak-free sealing with or without the inner guide catheter **1020** in place. The valve **1090** also prevents back bleeding and reduces the possibility of air introduction when inserting the inner guide catheter **1020** through the outer guide catheter **1000**. An example of a hemostatic valve **1090** is illustrated in **FIG. 76**A, however any suitable valve or hemostatic valve may be used to provide similar functions. In **FIG. 76**A, the valve **1090** has a first end **1091**, a second end **1092** and a lumen **1093** therethrough. The inner wall of lumen **1093** is preferably tapered toward end **1091** and may further include a plurality of tapered axial channels configured to receive the protrusions **1400** on the inner guide catheter **1020**. The first end **1091** is attached to the outer guide catheter **1000** and the second end **1092** is free. Referring now back to **FIG. 76**, the distal ends **1016**, **1026** of catheters **1000**, **1020**, respectively, are sized to be passable to a body cavity, typically through a body lumen such as a vascular lumen.

[0304] To assist in inserting the fixation device **14** through a hemostatic valve **1090**, a fixation device introducer may be used. For example, when the fixation device **14** is loaded on a delivery catheter **300** and an inner guide catheter **1020**, insertion of the fixation device **14**, delivery catheter **300** and inner guide catheter **1020** through an outer guide catheter **1000** involves passing the fixation device **14** through a hemostatic valve **1090** on the outer guide catheter **1000**. To reduce any trauma to the fixation device **14** by the hemostatic valve **1090**, a fixation device introducer may be used. An embodiment of a fixation device introducer **1420** is illustrated in **FIG. 76B**. The introducer **1420** includes a loading body **1422** and an insertion endpiece **1424**. The fixation device **14** is loaded into the loading body **1422** and into the insertion endpiece **1424** to approximately the dashed line **1428**. The insertion endpiece **1424** has a split end creating individual split sections **1430**, in this embodiment, four split sections **1430**. By compressing the split sections **1430**, the endpiece **1424** forms a taper. Such a taper is then inserted through a hemostatic valve **1090**, so that the insertion endpiece **1424** creates a smooth passageway through the valve for the fixation device **14**. Once the insertion endpiece **1424** is inserted through the valve **1090**, the fixation device **14**, and attached delivery catheter **300** and inner guide catheter **1020**, may then be advanced through the fixation device introducer **1420**. The fixation device introducer **1420** also includes a hemostatic valve within the loading body **1422** to prevent any backbleeding or leakage through the introducer **1420**.

[0305] Manipulation of the guide catheters **1000**, **1020** is achieved with the use of handles **1056**, **1057** attached to the proximal ends of the catheters **1000**, **1020**. As shown, handle **1056** is attached to the proximal end **1014** of outer guide catheter **1000** and handle **1057** is attached to the proximal end **1024** of inner guide catheter **1020**. Inner guide catheter **1020** is inserted through handle **1056** and is positioned coaxially within outer guide catheter **1000**.

[0306] An embodiment of the delivery catheter **300** of the present invention is inserted through handle **1057** and is positioned coaxially within inner guide catheter **1020** and outer guide catheter **1000**. Therefore, a hemostatic valve **1090** is disposed within handle **1057** or external to handle **1057** as shown to provide leak-free sealing with or without the delivery catheter **300** in place. The valve **1090** functions as described above. The delivery catheter **300** includes a shaft **302**, having a proximal end **322** and a distal end **324**, and a handle **304** attached to the proximal end **322**. A fixation device **14** is removably coupled to the distal end **324** for delivery to a site within the body.

[0307] The outer guide catheter **1000** and/or the inner guide catheter **1020** are precurved and/or have steering mechanisms to position the distal ends **1016**, **1026** in desired directions. Precurvature or steering of the outer guide catheter **1000** directs the distal end **1016** in a first direction to create a primary curve while precurvature and/or steering of the inner guide catheter **1020** directs distal end **1026** in a second direction, differing from the first, to create a secondary curve. Together, the primary and secondary curves form a compound curve. Advancement of the delivery catheter **300** through the coaxial guide catheters **1000**, **1020** guides the delivery catheter **300** through the compound curve toward a desired direction, usually in a direction which will position the fixation device **14** in a desired location within the body.

[0308] **FIG. 77** illustrates portions of another embodiment of an interventional system **3** of the present invention. Handles **1056**, **1057** of the multi-catheter guiding system **1** of the present invention are shown. Each handle **1056**, **1057** includes a set of steering knobs **1300***a*, **1300***b*, as shown. Manipulation of the guide catheters **1000**, **1020** is achieved with the use of the steering knobs **1300***a*, **1300***b* attached to the proximal ends of the catheters **1000**, **1020**. Handle **304** of the delivery catheter **300** is also shown, including the

proximal element line handle **312**, the lock line handle **310**, the actuator rod control **314** and the actuator rod handle **316**, among other features. The handle **304** is supported by the support base **306** which is connected to the handle **1057**.

[**0309**] It may be appreciated the above described systems **3** are not intended to limit the scope of the present invention. The systems **3** may include any or all of the components of the described invention. In addition, the multi-catheter guiding system **1** of the present invention may be used to introduce other delivery catheters, interventional catheters or other devices. Likewise, the delivery catheter **300** may be introduced through other introducers or guiding systems. Also, the delivery catheter **300** may be used to deliver other types of devices to a target location within the body, including endoscopic staplers, devices for electrophysiology mapping or ablation, septal defect repair devices, heart valves, annuloplasty rings and others.

[**0310**] In addition, many of the components of the system **3** may include one or more hydrophilic coatings. Hydrophilic coatings become slippery when wet, eliminate the need for separate lubricants. Thus, such coatings may be present on the multi-catheter guiding system, delivery catheter, and fixation device, including the proximal elements and distal elements, to name a few.

[**0311**] Further, the system **3** may be supported by an external stabilizer base **1440**, an embodiment of which is illustrated in **FIG. 78**. Stabilizer base **1440** maintains the relative positions of the outer guide, inner guide and delivery catheter during a procedure. In this embodiment, the base **1440** comprises a platform **1442** having a planar shape for positioning on or against a flat surface, such as a table or benchtop. The base **1440** further includes a pair of handle holders **1444**, **1448**, each attached to the platform **1442** and extending upwardly from the platform **1442**, either angularly or perpendicularly. Handle holder **1444** includes a notch **1446** for holding the outer guiding catheter **1000**, as illustrated in **FIG. 79**, thereby supporting the handle **1056**. **FIG. 79** shows the handle **1056** attached to the outer guiding catheter **1000** positioned so that the proximal end **1014** of the outer guiding catheter **1000** rests in the notch **1446**. Referring back to **FIG. 78**, handle holder **1448** includes an elongate portion **1452** having a trough **1450** and a hooked end **1454**. As shown in **FIG. 80**, handle **1057** rests on the elongate portion **1452** and the handle **304** rests on hooked end **1454** so that the inner guiding catheter **1020** extends from the handle **1057** to the handle **1056** and continues on within outer guiding catheter **1000**. The handle **304** is additionally supported by support base **306**, as shown.

[**0312**] It may be appreciated that the stabilizer base **1440** may take a variety of forms and may include differences in structural design to accommodate various types, shapes, arrangements and numbers of handles.

[**0313**] G. Kits

[**0314**] Referring now to **FIG. 81**, kits **1500** according to the present invention comprise any of the components described in relation to the present invention. The kits **1500** may include any of the components described above, such as the outer guide catheter **1000** including handle **1056**, the inner guide catheter **1020** including handle **1057**, the delivery catheter **300** and the fixation device **14** and instructions for use IFU. Optionally, any of the kits may further include any other system components described above, such as various interventional tools **1040**, or components associated with positioning a device in a body lumen, such as a guidewire **1202**, dilator **1206** or needle **1204**. The instructions for use IFU will set forth any of the methods as described above, and all kit components will usually be packaged together in a pouch **1505** or other conventional medical device packaging. Usually, those kit components which will be used in performing the procedure on the patient will be sterilized and maintained within the kit. Optionally, separate pouches, bags, trays or other packaging may be provided within a larger package, where the smaller packs may be opened separately to separately maintain the components in a sterile fashion.

[**0315**] While the foregoing is a complete description of the preferred embodiments of the invention, various alternatives, substitutions, additions, modifications, and equivalents are possible without departing from the scope of the invention. For example, in many of the above-described embodiments, the invention is described in the context of approaching a valve structure from the upstream side-that is, the atrial side in the case of a mitral valve. It should be understood that any of the foregoing embodiments may be utilized in other approaches as well, including from the ventricular or downstream side of the valve, as well as using surgical approaches through a wall of the heart. Moreover, the invention may be used in the treatment of a variety of other tissue structures besides heart valves, and will find usefulness in a variety of tissue approximation, attachment, closure, clamping and ligation applications, some endovascular, some endoscopic, and some open surgical.

[**0316**] Again, although the foregoing invention has been described in some detail by way of illustration and example, for purposes of clarity of understanding, it will be obvious that various alternatives, modifications and equivalents may be used and the above description should not be taken as limiting in scope of the invention which is defined by the appended claims.

What is claimed is:

1. A multi-catheter guiding system for accessing a body cavity comprising:

an outer guiding catheter having a proximal end, a distal end and a central lumen therethrough, the outer guiding catheter capable of forming a primary curve near its distal end; and

an inner guiding catheter having a proximal end, a distal end and a central lumen therethrough, the inner guiding catheter positionable within the central lumen of the outer guiding catheter so that its distal end extends beyond the distal end of the outer guiding catheter, the inner guiding catheter capable of forming a secondary curve near its distal end.

2. A system as in claim 1, wherein the primary curve and secondary curve lie in different planes.

3. A system as in claim 2, wherein the primary curve and secondary curve lie in substantially orthogonal planes.

4. A system as in claim 1, wherein the primary curve has a radius of curvature in the range of 0.125 in. to 1.000 in.

5. A system as in claim 1, wherein the secondary curve has a radius of curvature in the range of approximately 0.050 in. to 0.750 in.

6. A system as in claim 1, wherein the distal end of the inner guiding catheter is moveable through an angle theta.

7. A system as in claim 6, wherein the secondary curve and the angle theta lie in different planes.

8. A system as in claim 7, wherein the secondary curve and the angle theta lie in substantially orthogonal planes.

9. A system as in claim 6, wherein the primary curve, secondary curve and the angle theta each lie in different planes.

10. A system as in claim 9, wherein the primary curve, secondary curve and the angle theta each lie in substantially orthogonal planes.

11. A system as in claim 6, wherein the angle theta is in the range of −180° to +180° degrees.

12. A system as in claim 1, wherein the outer guiding catheter is capable of forming an additional curve near its distal end.

13. A system as in claim 12, wherein the additional curve and the primary curve lie in different planes.

14. A system as in claim 13, wherein the additional curve and the primary curve lie in substantially orthogonal planes.

15. A system as in claim 1, wherein the primary curve and/or secondary curve are preset so that forming of the curve(s) is by shape memory.

16. A system as in claim 1, further comprising a steering mechanism which forms the primary curve.

17. A system as in claim 16, wherein the steering mechanism forms an additional curve in the outer guiding catheter.

18. A system as in claim 1, further comprising a steering mechanism which forms the secondary curve.

19. A system as in claim 18, wherein the steering mechanism moves the distal end of the inner guiding catheter through an angle theta.

20. A system as in claim 1, further comprising a steering mechanism which forms the primary curve and another steering mechanism which forms the secondary curve.

21. A system as in claim 1, wherein the steering mechanism moves the distal end of the inner guiding catheter through an angle theta.

22. A multi-catheter guiding system for accessing a body cavity comprising:

an outer guiding catheter having a proximal end, a distal end and a central lumen therethrough, the outer guiding catheter capable of forming a curve;

an inner guiding catheter positionable at least partially within the central lumen of the outer guiding catheter, the inner guiding catheter capable of forming a curve which differs from the curve of the outer guiding catheter; and

a steering mechanism which forms the curve in one of the guiding catheters upon actuation.

23. A system as in claim 22, wherein the steering mechanism comprises at least one pullwire attached to the one of the guiding catheters, wherein actuation of the steering mechanism comprises applying tension to the at least one pullwire whereby the curve is formed.

24. A system as in claim 23, wherein the steering mechanism comprises at least two pullwires attached to the one of the guiding catheters in diametrically opposed locations, wherein applying tension to one of the pullwires curves the one of the guide catheters in one direction and applying tension to the pullwire attached in the diametrically opposed location curves the one of the guide catheters in another direction opposite to the one direction.

25. A system as in claim 24, wherein the steering mechanism comprises at least four pullwires wherein two of the at least four pullwires are attached to the one of the guiding catheters in diametrically opposed locations and another two of the at least four pullwires are attached to the one of the guiding catheters in diametrically opposed locations.

26. A system as in claim 25, wherein each of the two of the at least four pullwires and the another two of the at least four pullwires are attached to the one of the guiding catheters at locations which are 90 degrees apart.

27. A system as in claim 22, wherein a portion of the one of the guiding catheters comprises a series of articulating members and wherein the at least one pullwire is attached to one of the articulating members so that the curve is formed by at least some of the articulating members.

28. A system as in claim 27, wherein the articulating members comprise interfitting domed rings.

29. A system as in claim 22, wherein the steering mechanism forms the curve in the outer guiding catheter and the curve in the inner guiding catheter is preset so that it is formed by shape memory.

30. A system as in claim 22, wherein the steering mechanism forms the curve in the outer guiding catheter, the system further comprising another steering mechanism which forms the curve in the inner guiding catheter.

31. A system as in claim 22, wherein the steering mechanism forms the curve in the inner guiding catheter and the curve in the outer guiding catheter is preset so that it is formed by shape memory.

32. A system as in claim 22, further comprising a handle connectable with the steering mechanism, the handle having an actuator which actuates the steering mechanism.

33. A system as in claim 22, wherein the curve of the outer guiding catheter and the curve of the inner guiding catheter lie in substantially orthogonal planes.

34. A system as in claim 22, wherein the curve of the outer guiding catheter is a primary curve and the outer guiding catheter is capable of forming an additional curve.

35. A system as in claim 34, wherein the steering mechanism forms the primary curve and the additional curve.

36. A system as in claim 22, wherein the curve of the inner guiding catheter is a secondary curve and the inner guiding catheter is capable of moving through an angle theta, and wherein the steering mechanism forms the secondary curve and moves the inner guiding catheter through the angle theta.

37. A method of accessing a body cavity comprising:

positioning an outer guiding catheter having a proximal end, distal end and central lumen therethrough so that the distal end is at least partially within the body cavity;

forming a primary curve in the distal end of the outer guiding catheter;

advancing an inner guiding catheter through the central lumen of the outer guiding catheter; and

forming a secondary curve in the inner guiding catheter which differs from the primary curve.

38. A method as in claim 37, wherein the primary curve and secondary curves lie in different planes.

39. A method as in claim 38, wherein the primary curve and secondary curve lie in substantially orthogonal planes.

40. A method as in claim 37, further comprising moving the inner guiding catheter through an angle theta.

41. A method as in claim 40, wherein the secondary curve and the angle theta lie in different planes.

42. A method as in claim 41, wherein the secondary curve and the angle theta lie in substantially orthogonal planes.

43. A method as in claim 40, wherein the primary curve, secondary cure and angle theta each lie in different planes.

44. A method as in claim 43, wherein the primary curve, secondary curve and angle theta each lie in substantially orthogonal planes.

45. A method as in claim 37, further comprising forming an additional curve in the outer guiding catheter.

46. A method as in claim 45, wherein the additional curve and the primary curve lie in different planes.

47. A method as in claim 46, wherein the additional curve and the primary curve lie in substantially orthogonal planes.

48. A method as in claim 37, wherein forming the primary curve is achieved by allowing the outer guiding catheter to resume a shape memory configuration.

49. A method as in claim 37, wherein forming the secondary curve is achieved by allowing the inner guiding catheter to resume a shape memory configuration.

50. A method as in claim 37, wherein the outer guiding catheter includes a steering mechanism and forming the primary curve is achieved by actuating the steering mechanism.

51. A method as in claim 50, further comprising forming an additional curve in the outer guiding catheter, wherein forming the additional curve is achieved by actuating the steering mechanism.

52. A method as in claim 37, wherein the inner guiding catheter includes a steering mechanism and forming the secondary curve is achieved by actuating the steering mechanism.

53. A method as in claims **52**, further comprising moving the inner guiding catheter through an angle theta, wherein moving the inner guiding catheter is achieved by actuating the steering mechanism.

54. A method as in claims **50** or **52**, wherein the steering mechanism comprises at least one pullwire, wherein actuation of the steering mechanism comprises applying tension to the at least one pullwire.

55. A method as in claim 37, wherein the inner guiding catheter comprises a proximal end, a distal end and a central lumen therethrough, further comprising advancing an interventional device through the central lumen of the inner guiding catheter.

56. A method as in claim 37, wherein the body cavity comprises a chamber of the heart and forming the secondary curve directs the inner guiding catheter toward a valve.

57. A method as in claim 56, wherein the valve comprises a mitral valve.

58. A kit for accessing a body cavity:

a multi-catheter guiding system comprising:

an outer guiding catheter having a proximal end, a distal end and a central lumen therethrough,

an inner guiding catheter positionable at least partially within the central lumen;

instructions for using the multi-catheter guiding system, wherein the instructions set forth method steps including:

positioning the outer guiding catheter so that its distal end is at least partially within the body cavity;

forming a primary curve in the distal end of the outer guiding catheter;

advancing the inner guiding catheter through the central lumen of the outer guiding catheter; and

forming a secondary curve in the inner guiding catheter which differs from the primary curve.

59. A kit as in claim 58, further comprising an interventional device advancable through the inner guiding catheter.

60. A kit as in claim 58, further comprising a handle attachable to the outer guiding catheter.

* * * * *