Trials@uspto.gov
571-272-7822

Paper 87
Date: February 17, 2021

UNITED STATES PATENT AND TRADEMARK OFFICE

BEFORE THE PATENT TRIAL AND APPEAL BOARD

ZTE (USA), INC. and LG ELECTRONICS INC.,
Petitioner,

v.

CYWEE GROUP LTD.,
Patent Owner.

IPR2019-00143
Patent 8,441,438 B2

Before KEVIN F. TURNER, PATRICK M. BOUCHER, and CHRISTOPHER L. OGDEN, *Administrative Patent Judges.*

OGDEN, *Administrative Patent Judge*.

JUDGMENT
Final Written Decision
Determining All Challenged Claims Unpatentable
Denying Patent Owner's Motion to Amend
35 U.S.C. § 318(a)

SAMSUNG EXHIBIT 1012

I. INTRODUCTION

In response to a Petition (Paper 1, "Pet.") by ZTE (USA), Inc. ("ZTE"),[1] the Board instituted an *inter partes* review of claims 1, 4, 5, 14–17, and 19 of U.S. Patent No. 8,441,438 B2 (Ex. 1001, "the '438 patent"). Paper 7. CyWee Group Ltd. ("CyWee"),[2] the Patent Owner, filed a Patent Owner Response (Paper 18, "PO Resp."), ZTE filed a Reply to the Patent Owner Response (Paper 33, "ZTE Reply"), and CyWee filed a Sur-reply (Paper 37, "PO Sur-reply").

CyWee also filed a contingent Motion to Amend proposing a set of substitute claims if we find the original claims unpatentable. Paper 19 ("MTA"). ZTE filed an Opposition to this Motion to Amend, Paper 34, and we issued Preliminary Guidance under the Board's Motion to Amend Pilot Program. Paper 35.

After we issued our Preliminary Guidance, we determined that a separate petition by LG Electronics Inc. ("LGE")[3] had met the requirements for instituting an *inter partes* review in *LG Electronics Inc., v. CyWee Group Ltd.*, IPR2019-01203, Paper 12 (PTAB Dec. 17, 2019); Paper 36 (same decision filed in this case). So we joined LGE to this proceeding under 35 U.S.C. § 315(c). Paper 36, 45–49. We noted that LGE had agreed to act

---

[1] ZTE identifies ZTE (USA), Inc. and ZTE Corporation as the real parties in interest. Pet. 2.

[2] CyWee identifies CyWee Group Ltd. as the real party in interest. Paper 5, 2.

[3] LGE identifies LG Electronics Inc. and LG Electronics U.S.A., Inc. as the real parties in interest. IPR2019-01203, Paper 2, 1. LGE also "further identifies" ZTE (USA), Inc. and ZTE Corporation as real parties in interest. *Id.*

in a passive "understudy" role, and would not assume an active role unless ZTE ceased to participate in the *inter partes* review. *Id.* at 46.

Thereafter, CyWee filed a contingent Revised Motion to Amend, which included a different set of proposed substitute claims. Paper 38 ("RMTA"). ZTE submitted an Opposition stating that "[b]ased on the Board's Preliminary Guidance and Patent Owner's Revised Motion to Amend, petitioner withdraw[s] all objections to the revised amended claims and hence, [ZTE] does not challenge the patentability of the revised amended claims. [ZTE] therefore does not oppose Patent Owner's Revised Motion to Amend." Paper 41, 1–2.

LGE then requested permission to file its own Opposition to the Revised Motion to Amend, which we initially denied, but granted on rehearing. Paper 50. We held that LGE may "present arguments and evidence, independently from ZTE, in response to CyWee's Revised Motion to Amend," but "limited solely to the issues raised in CyWee's Revised Motion to Amend." *Id.* at 9; *but see id.* at 5 (Boucher, J., dissenting) ("We should hold LGE to limitations it freely imposed upon itself, and upon which CyWee appears to have relied."). LGE then filed an Opposition to the Revised Motion to Amend. Paper 62 ("Opp. RMTA").

We held an oral hearing on November 18, 2020, and the transcript is entered on the record. Paper 84 ("Tr."). At the hearing, the parties addressed only the proposed substitute claims in the Revised Motion to Amend, and not the grounds of the Petition. *See* Tr. 6:2–8.

This is a Final Written Decision under 35 U.S.C. § 318(a) as to whether the claims challenged in the *inter partes* review are patentable and as to the merits of CyWee's Revised Motion to Amend. ZTE has shown, by

a preponderance of the evidence on the record before us, that claims 1, 4, 5, 14–17, and 19 of the ’438 patent are unpatentable. LGE has shown, by a preponderance of the evidence, that proposed substitute claims 20–24 are unpatentable and we determine that proposed substitute claims 21 and 24 add new matter, so we also deny CyWee’s Revised Motion to Amend.

II. BACKGROUND

A. Related Proceedings

The parties identify the following as related district court cases: *CyWee Group Ltd. v. ZTE (USA) Inc.*, No. 3:17-cv-02130 (S.D. Cal.); *CyWee Group Ltd. v. Google, Inc.*, No. 1:18-cv-00571 (D. Del.); *CyWee Group Ltd. v. HTC Corporation et al.*, No. 2:17-cv-00932 (W.D. Wash.); *CyWee Group Ltd. v. Motorola Mobility LLC*, No. 1:17-cv-00780 (D. Del.); *CyWee Group Ltd. v. Huawei Technologies Co., Inc. et al.*, No. 2:17-cv-00495 (E.D. Tex.); *CyWee Group Ltd. v. LG Electronics, Inc. et al.*, Case No. 3:17-cv-01102, (S.D. Cal.); and *CyWee Group Ltd. v. Samsung Electronics Co. Ltd. et al.*, No. 2:17-cv-00140 (E.D. Tex.); *CyWee Group Ltd. v. Apple Inc.*, No. 4:14-cv-01853 (N.D. Cal.). Pet. 2–3; Paper 5, 2–3.

The Board has also issued a final written decision involving the ’438 patent in *Google LLC v. CyWee Group Ltd.*, No. IPR2018-01258, Paper 86 (PTAB Jan. 9, 2020). Pet. 3; Paper 5, 3. In this decision, the Board concluded that claims 1 and 3–5 of the ’438 patent are unpatentable, and the Board denied CyWee’s motion to amend. IPR2018-01258, Paper 86 at 116.

B. THE ’438 PATENT (EX. 1001)

The ’438 patent issued from U.S. Patent Application No. 12/943,934 (“the ’934 application”), which has a filing date of November 11, 2010. Ex. 1001, codes (21), (22). It claims priority to U.S. Provisional Application No. 61/292,558 (“the ’558 provisional application”), filed on January 6, 2010. *Id.* at code (60); 1:7–9.

The ’438 patent “relates to a three-dimensional (3D) pointing device.” Ex. 1001, 1:17–18. In describing the prior art, the inventors discuss the function of a general 3D pointing device, as shown in Figure 1, reproduced below:

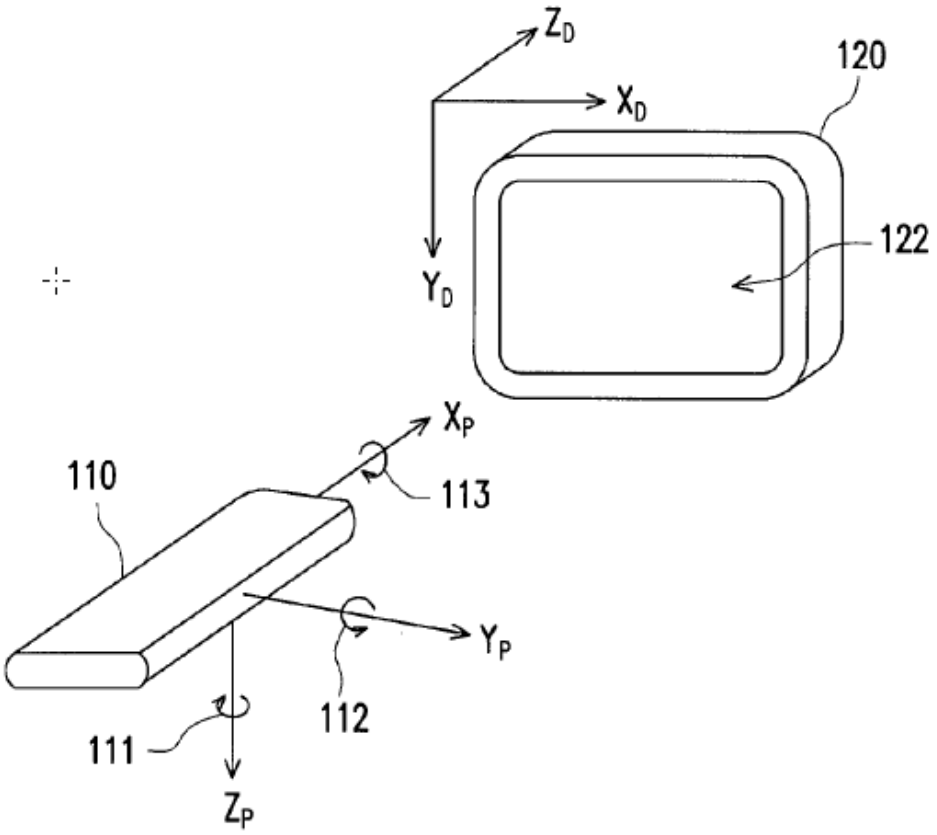

FIG. 1 (RELATED ART)

Figure 1 is a schematic diagram depicting prior-art handheld 3D pointing device 110. Ex. 1001, 1:28–29. A user may point it at screen 122 of display device 120 to perform control actions. *Id.* at 1:29–30, 1:48–51. Figure 1 shows sets of axes representing two different reference frames: a "spatial pointer reference frame" associated with pointing device 110, and a "display frame" associated with display device 120. *Id.* at 1:35–38. The spatial pointer reference frame is defined by coordinate axes X_P, Y_P, and Z_P, while the display frame is defined by coordinate axes X_D, Y_D, and Z_D. *Id.* at 1:38–43.

The system keeps track of the orientation of pointing device 110 by measuring three deviation angles: yaw angle 111 representing the device's rotation about axis Z_P, pitch angle 112 representing its rotation about axis Y_P, and roll angle 113 representing its rotation about axis X_P. Ex. 1001, 1:58–2:2. The system may then perform "mapping" by translating the deviation angles in the spatial pointer reference frame onto the display frame. *Id.* at 2:33–37; *see also id.* at 2:3–22 (describing prior art examples of mapping).

The pointing device of the claimed invention performs such mapping using "a six-axis motion sensor module." Ex. 1001, 1:19–23. "Six-axis" means that the sensor module is "capable of detecting rotation rates or angular velocities of the 3D pointing device about all of the X_P, Y_P, and Z_P axes as well as axial accelerations of the 3D pointing device along all of the X_P, Y_P and Z_P axes." Ex. 1001, 4:62–65. Figure 4, reproduced below, is a schematic diagram of the pointing device's six-axis sensor module and other hardware components:

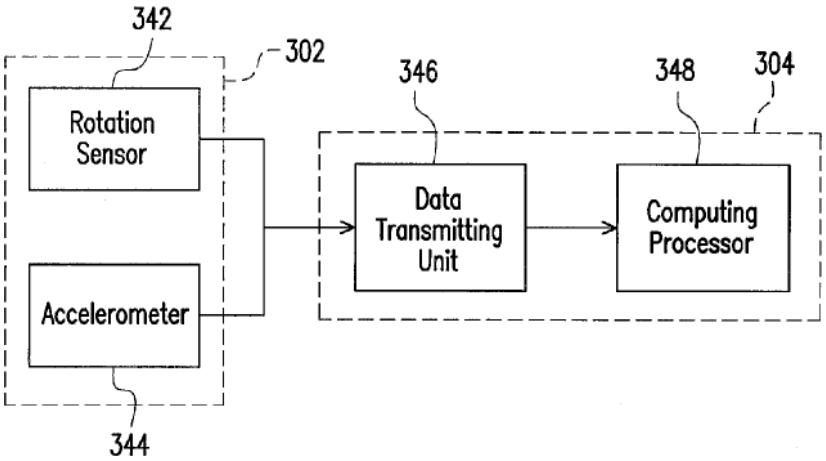

FIG. 4

Above, in Figure 4 of the '438 patent, dashed box 302 represents a "six-axis motion sensor module," which includes rotation sensor 342 and accelerometer 344. Ex. 1001, 7:59–61.[4] Dashed box 304 represents a "processing and transmitting module," which includes data transmitting unit 346 and computing processor 348. *Id.* at 7:61–63.

Figure 4 also includes arrows from rotation sensor 342 and accelerometer 344 to data transmitting unit 346 (depicting the flow of first and second "signal sets," respectively), and an arrow from data transmitting unit 346 to computer processor 348. *See id.* at 7:64–8:26. The first signal set includes "angular velocities ω_x, ω_y, and ω_z associated with the movements and rotations of the 3D pointing device" about the spatial pointer reference frame. *Id.* at 7:65–8:2. The second signal set includes "axial accelerations Ax, Ay, Az associated with the movements and rotations of the 3D pointing device . . . along each of the three orthogonal coordinate axes X_P Y_P Z_P of the spatial pointer reference frame." *Id.* at 8:4–8.

[4] CyWee states that the "six-axis sensor module . . . may consist of sensors known in the art." PO Resp. 3.

The sensors, and the method of calculating the deviation angles in the spatial pointer reference frame, produce errors and noise over time, and according to the ’438 patent, an object of the claimed invention is to correct or eliminate the errors and noise. *See* Ex. 1001, 3:52–66; *id.* at 4:20–30. Thus, the pointing device of the claimed invention uses the first and second signal sets to compensate for accumulated errors, over time, in the device’s estimation of its spatial orientation. *See id.*, Abstract, 1:17–26, 4:20–30.

A flowchart representing one embodiment of this compensation method is shown in Figure 7, reproduced below:

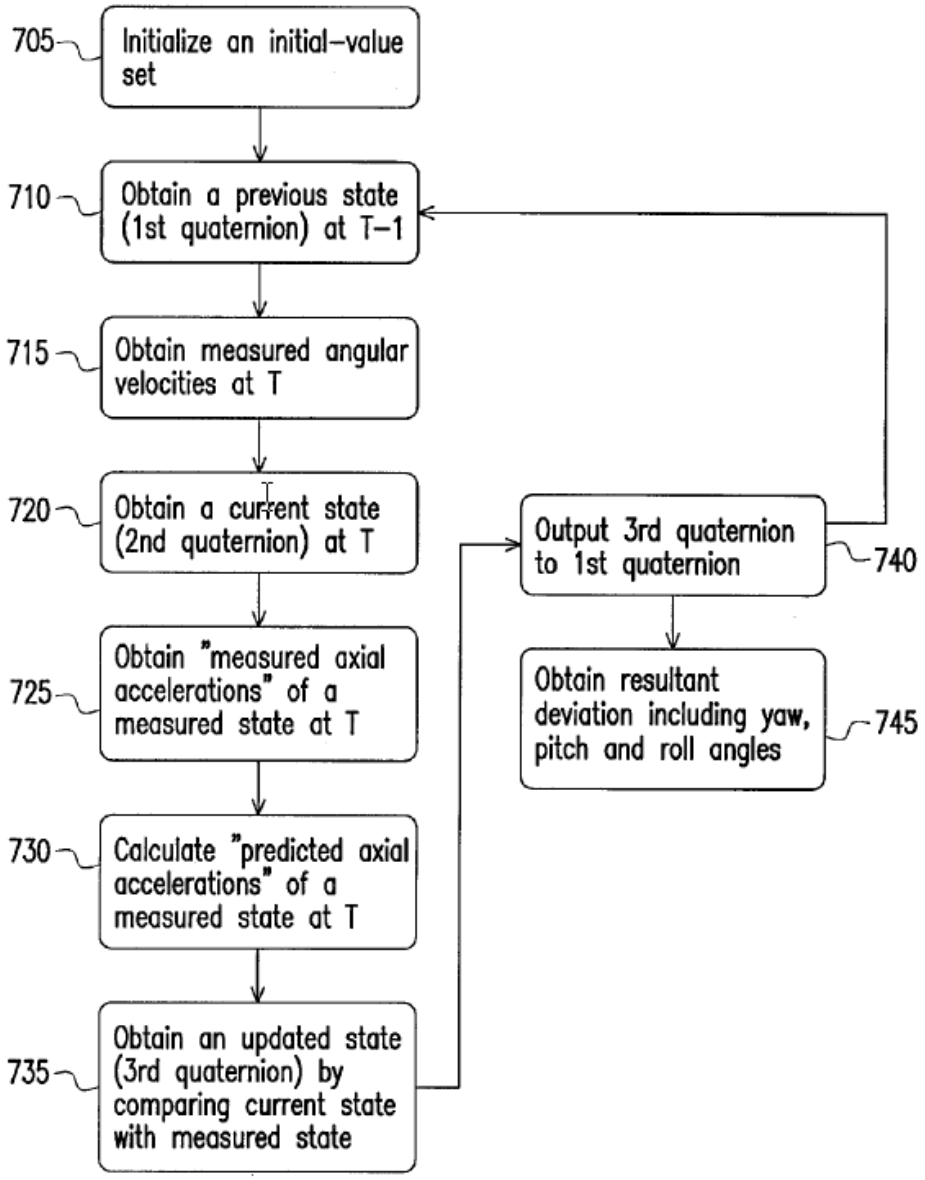

FIG. 7

The flowchart in Figure 7, above, depicts a method of calculating deviation angles of a 3D pointing device's special pointer reference frame. Ex. 1001, 10:42–47. The method starts with either initializing a new state or "obtaining a previous state of the six-axis motion sensor module (. . . steps 705, 710)."

Id. at 10:66–11:1. This state is in the form of "a first quaternion[5] associated with previous angular velocities ω_x, ω_y, ω_z gained from the motion sensor signals of the six-axis motion sensor module at a previous time T−1." *Id.* at 11:2–4.

The method proceeds by "obtaining measured angular velocities ω_x, ω_y, ω_z gained from the motion sensor signals of the six-axis motion sensor module at a current time T (. . . steps 715, 720)," to form a second quaternion representing the "current state." Ex. 1001, 11:6–8, 12:32–60. According to the '438 patent, one way to convert ω_x, ω_y, ω_z into the "second quaternion" is by using equation 1, below:

$$\begin{bmatrix} \dot{q}_0 \\ \dot{q}_1 \\ \dot{q}_2 \\ \dot{q}_3 \end{bmatrix} = \frac{1}{2} \begin{bmatrix} 0 & -\omega_x & -\omega_y & -\omega_z \\ \omega_x & 0 & \omega_z & -\omega_y \\ \omega_y & -\omega_z & 0 & \omega_x \\ \omega_z & \omega_y & -\omega_x & 0 \end{bmatrix} \begin{bmatrix} q_0 \\ q_1 \\ q_2 \\ q_3 \end{bmatrix}$$

Equation 1 is a differential equation with respect to quaternion (q_0, q_1, q_2, q_3), and the '438 patent suggests solving it using a data conversion utility. *See id.* at 12:40–60.

The method in Figure 7 then obtains the "measured state" of the six-axis motion sensor module in steps 725 and 730. Ex. 1001, 12:61–64. This measured state has two parts: a set of "measured axial accelerations Ax, Ay, Az" obtained from the accelerometer signals (step 725), and "predicted axial accelerations Ax′, Ay′, Az′," which are calculated based on the measured

[5] ZTE's declarant Scott Andrews explains that quaternions are four-dimensional extensions of complex numbers that "have the unique property of maintaining rotational relationships with relatively limited computational complexity." Ex. 1003 ¶ 41. CyWee does not dispute this explanation.

angular velocities (step 730). *Id.* at 11:10–15, 12:61–13:24. The predicted axial accelerations in step 730 are "calculated based on the . . . current state or second quaternion in relation to the measured angular velocities thereof." *Id.* at 13:11–13.[6]

Next, in step 735, the algorithm obtains a "third quaternion," representing an "updated state," by comparing the current state with the measured state. *Id.* at 11:15–18, 13:25–14:34. It does this by using a "comparison model" involving equations 5–11. In testimony that we find persuasive, CyWee's expert Professor LaViola characterizes equations 5–10 as extended Kalman filter equations, which were known in the art, and describes equation 11 as an error minimization. Ex. 2021 ¶ 46. He states that in the general framework of an extended Kalman filter, equations 5–10 represent a process model (equation 5)[7] and its corresponding covariance

---

[6] The '438 patent includes equations for calculating axial accelerations in terms of second quaternion (q_0, q_1, q_2, q_3), but the symbols for axial accelerations in these equations are Ax, Ay, and Az rather than the primed symbols Ax′, Ay′, and Az′. *See* Ex. 1001, 13:18–23 (equations 2–4). CyWee contends that a person of ordinary skill in the art would have understood that the absence of primes in these equations was a typographical error, and that the equations refer to the predicted axial accelerations. Reply RMTA 7. LGE contests this. *See* Opp. RMTA 9–11. We do not need to decide whether CyWee is correct, because we do not address LGE's enablement arguments in its Opposition to the Revised Motion to Amend. *See infra* part V.D.1.

[7] According to Professor LaViola's testimony, which we find persuasive, equation 5 represents a process model, and equation 1 represents the particular process model for the embodiment described in the '438 patent. *See* Ex. 1048, 103:20–21 ("The process model [in the '438 patent] is defined in equation 5, which in turn is equation 1."); *see also id.* at 108:4 ("the process model of equation 1"); *id.* at 134:21–24 ("[A]nyone of ordinary skill in the art would see that equation 1 is the equation that ultimately is being

matrix, a measurement model (equation 8)[8] and its corresponding covariance matrix, as well as Jacobians associated with each of the two models (equations 6, 7, and 10)[9] that linearize the nonlinear functions represented by each model. Ex. 1048, 102:15–103:7.

Next, "to provide a continuous loop," the method in step 740 outputs and substitutes the third quaternion (updated state) into the first quaternion (previous state) (step 710). *Id.* at 11:22–29. Ultimately, in step 745, the method uses the third quaternion to generate a "resulting deviation," in terms of yaw, pitch, and roll angles, with respect to the axes of the spatial pointer reference frame. *Id.* at 14:47–15:7. According to the '438 patent, one may use these resulting deviation angles to map locations from 3D space to corresponding locations that indicate where the device is pointing on a 2D display device. *See id.* at 15:39–17:40, Figs. 8, 9.

---

used in equation 5 . . . ."); *id.* at 135:20–22 (stating that the f function in equation 5 "relates to equation 1 as the underlying process model").

[8] Ex. 1048, 85:21–23 ("I believe equation 8 would be the [model] dealing with the measurement."); *id.* at 108:5–7 ("[T]he measurement model of H . . . would be defined by equation 8); *id.* at 141:15–16 ("The measurement model is really defined as equation 8.").

[9] Ex. 1048, 100:1–6 (identifying the Jacobian matrices as equations 6, 7, and 10).

C. CHALLENGED CLAIMS AND ASSERTED GROUNDS OF UNPATENTABILITY

ZTE challenges the patentability of claims 1, 4, 5, 14–17, and 19 of the ’438 patent. Pet. 6, 31, 60. The table below is a summary of the grounds in the Petition:

Claim(s) Challenged	35 U.S.C. §	Reference(s)/Basis
1, 4, 5, 14–17, 19	103(a)[10]	Yamashita,[11] Bachmann[12]
1, 4, 5, 14–17, 19	103(a)	Nasiri,[13] Song[14]

Independent claim 1, which is illustrative of the other claims, is as follows:

[1(pre)] 1. A three-dimensional (3D) pointing device subject to movements and rotations in dynamic environments, comprising:

[1(a)] a housing associated with said movements and rotations of the 3D pointing device in a spatial pointer reference frame;

[1(b)] a printed circuit board (PCB) enclosed by the housing;

---

[10] 35 U.S.C. 103(a) (2006), *amended by* Leahy–Smith America Invents Act, Pub. L. No. 112-29 § 103, sec. (n)(1), 125 Stat. 284, 287, 293 (2011) (effective Mar. 16, 2013). The filing date of the ’934 application was November 11, 2010, which was before the effective date of this amendment. *See* Ex. 1001, code (22).

[11] Yamashita et al., US 8,267,785 B2 (issued Sept. 18, 2012) (Ex. 1006).

[12] Bachmann et al., US 7,089,148 B1 (issued Aug. 8, 2006) (Ex. 1007).

[13] Nasiri et al., US 8,462,109 B2 (issued June 11, 2013) (Ex. 1008). Nasiri incorporates, by reference, the entirety of Sachs et al., US 2009/0265671 A1 (published Oct. 22, 2009) (Ex. 1009) (“Sachs”). *See* Nasiri 1:47–19, 1:57–58, 13:65–14:3.

[14] Song et al., US 2007/0299626 A1 (published Dec. 27. 2007) (Ex. 1010).

[1(c)] a six-axis motion sensor module attached to the PCB, comprising

[1(d)] a rotation sensor for detecting and generating a first signal set comprising angular velocities ω_x, ω_y, ω_z associated with said movements and rotations of the 3D pointing device in the spatial pointer reference frame,

[1(e)] an accelerometer for detecting and generating a second signal set comprising axial accelerations Ax, Ay, Az associated with said movements and rotations of the 3D pointing device in the spatial pointer reference frame; and

[1(f)] a processing and transmitting module, comprising

[1(g)] a data transmitting unit electrically connected to the six-axis motion sensor module for transmitting said first and second signal sets thereof and

[1(h)] a computing processor for receiving and calculating said first and second signal sets from the data transmitting unit,

[1(i)] communicating with the six-axis motion sensor module to calculate a resulting deviation comprising resultant angles in said spatial pointer reference frame

[1(j)] by utilizing a comparison to compare the first signal set with the second signal set whereby

[1(k)] said resultant angles in the spatial pointer reference frame of the resulting deviation of the six-axis motion sensor module of the 3D pointing device are obtained under said dynamic environments,

[1(l)] wherein the comparison utilized by the processing and transmitting module further comprises

[1(m)] an update program to obtain an updated state based on a previous state associated with said first signal set and a measured state associated with said second signal set;

[1(n)] wherein the measured state includes a measurement of said second signal set and a predicted measurement obtained based on the first signal set without using any derivatives of the first signal set.

Ex. 1001 at 18:54–19:26 (ZTE's reference numbers and line formatting added). Claims 14 and 19 are also independent. *See id.* at 21:8–45, 22:17–54. Claims 4 and 5 depend from claim 1, while claims 15–17 depend from claim 14. *See id.* at 19:37–47, 22:5–8.

D. EXPERT TESTIMONY

1. Mr. Scott Andrews

ZTE supports its Petition with the Declaration of Scott Andrews, Oct. 31, 2018. Ex. 1003. Mr. Andrews has a Master of Science degree in Electronic Engineering from Stanford University, and is a consultant for Cogenia Partners, LLC, "focusing on systems engineering, business development and technical strategy supporting automotive and information technology." *Id.* ¶¶ 9, 15; *see also id.*, App'x A (Mr. Andrews's curriculum vitae). He also submitted a Rebuttal Declaration in Support of ZTE's Reply to CyWee's Patent Owner Response and its Opposition to CyWee's original Motion to Amend. Ex. 1030.

CyWee alleges that Mr. Andrews is not a person of ordinary skill in the art because in his deposition he "admits that he is not familiar with [extended Kalman filters] or the equations used with [extended Kalman filters]." PO Resp. 62 (citing Ex. 2016, 148:24–149:11, 150:3–13).

We note that in his deposition, Mr. Andrews did express familiarity with *linear* Kalman filters. *See* Ex. 2016, 148:24–149:6. His deposition came after he had submitted his initial Declaration (Ex. 1003), which did not

offer any expert opinion that relied on prior familiarity with extended Kalman filters. Subsequently, Mr. Andrews's Rebuttal Declaration (Ex. 1030) offered commentary on equations 1 and 5–10 of the '438 patent, as well as an application of an extended Kalman filter in Bachmann2[15] (Ex. 1032), which ZTE asserted in its Opposition to CyWee's original Motion to Amend.[16] *See, e.g.*, Ex. 1030 ¶¶ 33, 78–85, 147–148, 168–173. Mr. Andrews also stated that his Rebuttal Declaration is based on his "investigation and study of relevant materials," and his new testimony exhibits familiarity with extended Kalman filters. The evidence shows that after his deposition, Mr. Andrews familiarized himself with extended Kalman filters before testifying in his Rebuttal Declaration.

As we discuss below, we determine that a person of ordinary skill in the art would have had "knowledge of . . . Kalman filters and extended Kalman filters." *See infra* part IV.A. However, we do not place any restrictions on how the person obtains such knowledge. A person such as Mr. Andrews, who has extensive background and education in adjacent matters within the field, including knowledge of linear Kalman filters, may obtain the required knowledge through study, and Mr. Andrews evidently did so prior to his Rebuttal Declaration. Thus, Mr. Andrews' initial lack of

---

[15] João Luis Marins et al., *An Extended Kalman Filter for Quaternion-Based Orientation Estimation Using MARG Sensors*, Proc. 2001 IEEE/RSJ Int'l Conf. on Intelligent Robots & Systems (Oct. 29–Nov. 3, 2001) (Ex. 1032, "Bachmann2").

[16] LGE also asserts Bachmann2 in its Opposition to CyWee's Revised Motion to Amend. *See* Opp. RMTA 15–23. In support, Professor Michalson separately testifies about Bachmann2's use of an extended Kalman filter. *See* Ex. 1051 ¶ 69–70.

familiarity with extended Kalman filters is not an impediment to him having acquired knowledge sufficient to testify as a person of ordinary skill in the art for this proceeding.

Also, to be qualified as an expert, Mr. Andrews does not necessarily need to be a person of ordinary skill in the art as to the precise subject matter of the patent. A witness may qualify as an expert if they have "knowledge, skill, experience, training, or education" of a "scientific, technical, or other specialized" nature that is likely to help the Board "to understand the evidence or to determine a fact in issue." Fed. R. Evid. 702; *see also* PTAB Consolidated Trial Practice Guide, 34 (Nov. 2019), https://go.usa.gov/xpvPF ("CTPG") ("There is . . . no requirement of a perfect match between the expert's experience and the relevant field." (citing *SEB S.A. v. Montgomery Ward & Co.*, 594 F.3d 1360, 1373 (Fed. Cir. 2010))). We find that Mr. Andrews has such specialized knowledge, and that his expertise is helpful for us to understand the evidence and to determine the facts at issue, including the evidence and facts relating to extended Kalman filters. Therefore, we find that Mr. Andrews qualifies as an expert as to the entire subject matter of his declarations.

2. Professor Joseph LaViola

CyWee supports its arguments with the Declaration of Joseph LaViola, Ph.D., Feb. 20, 2018. Ex. 2001. Professor LaViola is the Charles N. Millican Professor of Computer Science in the University of Central Florida, and directs the Interactive Computing Experiences Research Cluster at that school. *See id.* ¶ 7; *see also* Ex. 2002, 1 (Professor LaViola's curriculum vitae). Professor LaViola also submitted a Declaration in Support of the Patent Owner Response and the Motion to Amend. Ex. 2015. He later

submitted a Third Declaration in Support of the Patent Owner Response and the Revised Motion to Amend. Ex. 2021.

ZTE and LGE do not contest that Professor LaViola is qualified as an expert witness as to the subject matter of his declarations, and we find that he is qualified.

3. Professor William Michalson

LGE supports its Opposition to CyWee's Revised Motion to Amend with the Declaration of Professor William Michalson. Ex. 1051. He is a Professor of Electrical and Computer Engineering at Worcester Polytechnic Institute, and holds collaborative appointments as a Professor of Computer Science, a professor of Mechanical Engineering, and a Professor of Robotics Engineering. Ex. 1052, 1 (Professor Michalson's curriculum vitae).

CyWee does not contest that Professor Michalson is qualified as an expert witness on the subject matter of his Declaration. But CyWee contends that we should disregard his Declaration based on passages that, according to CyWee, show that his Declaration is "obviously parroted attorney argument" that "should be given no weight." PO Reply RMTA 1–2.

First, CyWee argues that in one instance, Professor Michalson refers to himself in the third person. PO Reply RMTA 1 (citing Ex. 1051 ¶ 61 n.8); Tr. 75:2–8 (LGE asserting that Professor Michalson's reference to himself in the third person was a "singular occurrence"). The testimony in this passage relates to how a person of ordinary skill in the art would have understood the phrase "non-magnetic materials" in Bachmann, and states that Professor Michalson has reviewed, and agrees with, testimony on this subject in the prior IPR2018-01258 case by Google's expert Professor Sarrafzadeh. *See* Ex. 1051 ¶ 61 n.8 (citing Ex. 1058 ¶¶ 4–12).

As we discuss below, we find Professor Michalson's testimony on this point to be persuasive. *See infra* part IV.C.4. That Professor Michalson appears to refer to himself in the third person is probably an artifact of the drafting process. He executed his declaration under penalty of perjury, and we have no reason to question that the declaration ultimately reflects his actual opinion at the time he signed it. *See* Ex. 1051, 51.

Second, CyWee contends that Professor Michalson "makes assertions regarding procedure that are neither relevant to his purported analysis nor within his purported expertise." PO Reply RMTA 1 (citing Ex. 1058, ¶ 24 n.1, ¶ 38). In the cited passages, Professor Michalson expresses his "understanding" that CyWee has failed to meet its procedural obligation to provide sufficient support for the proposed substitute claims as a whole. Ex. 1058, ¶ 24 n.1, ¶ 38.

We do not interpret Professor Michalson's testimony as an expert opinion on the procedural requirements of a motion to amend. In any event, as we discuss below, we do not need to address the question of whether CyWee has failed to provide support for the proposed substitute claims as a whole. *See infra* parts V.B.1, V.C.2. Thus, even if these statements were offered as expert testimony, we would not rely on them in our decision.

Third, CyWee contends that Professor Michalson "cites to statutory provisions that are not at issue with no corresponding demonstration that Dr. Michalson even knows what those provisions are or mean," and in particular, "claims that the art cited by ZTE, not LG[E], is '102(b) art' when 102(b) is not asserted." PO Reply RMTA 1 (citing Ex. 1051 ¶ 56).

In the passage that CyWee cites, Professor Michalson states that "Yamamoto, Bachmann, and Bachmann2 published more than a year before

[November 11, 2010], so each qualifies as 102(b) art. Withanawasam[17] qualifies as 102(e) art, because its June 3, 2009 filing date is before the November 11, 2010 priority date." Ex. 1051 ¶ 56.[18] By this testimony, we do not understand Professor Michalson to be offering an expert opinion on the meaning of 35 U.S.C. § 102. Moreover, we discern no inconsistency in identifying § 102(b) as the statutory basis for qualifying a reference as prior art even when no patentability challenge is raised under § 102(b). In any event, we do not rely on this testimony to conclude that Withanawasam, Bachmann, and Bachmann2 qualify as prior art. *See infra* parts IV.C.2, V.D.2(a), V.D.3(a).[19]

Finally, CyWee argues that we should disregard Professor Michalson's Declaration because it "fails to identify the Board's Preliminary Guidance as something he reviewed." PO Reply RMTA 1 (citing Ex. 1051, iii–v, ¶ 10).

We do not understand Professor Michalson to be offering an expert opinion as to the content or meaning of the Preliminary Guidance, nor have we relied on his Declaration for that purpose.

---

[17] Withanawasam, US 2010/0312468 A1 (published Dec. 9, 2020) (Ex. 1049).

[18] Contrary to CyWee's argument, LGE does cite Yamamoto, Bachmann, Bachmann2, and Withanawasam in its Opposition to the Revised Motion to Amend. *See* Opp. RMTA 15–24.

[19] Because we find that LGE has not shown unpatentability under its alternative ground involving the combination of Yamamoto, Bachmann, and Bachmann2, we do not need to determine whether Yamamoto qualifies as prior art. *See infra* part V.D.3.

Having considered CyWee's arguments, we find that Professor Michalson is qualified as an expert witness as to the subject matter of his Declaration, and we have assigned weight to his testimony, as appropriate, as we discuss in the remainder of this decision.

III. TIME-BAR ISSUE

Before addressing the grounds of the Petition, we address CyWee's contention that we should not have instituted the *inter partes* review because ZTE is time barred. *See* PO Resp. 62–63.

Under 35 U.S.C. § 315(b), we may not institute an *inter partes* review "if the petition requesting the proceeding [wa]s filed more than 1 year after the date on which the petitioner, real party in interest, or privy of the petitioner [wa]s served with a complaint alleging infringement of the patent." CyWee contends that ZTE's Petition is time barred because it failed to identify time-barred real parties in interest or privies to this proceeding including LG Electronics Inc., Samsung Electronics Co. Ltd., and Huawei Device USA, Inc. PO Resp. 62–63. In support of this argument, CyWee points to "the facts and evidence (Exs. 2008–2014) already put forth in [a Motion for Additional Discovery and an associated Reply]." *Id.* at 62.[20]

CyWee's argument is similar to an argument that the Board rejected in the related *Google v. CyWee* case, where CyWee alleged that petitioner Google was time-barred. *See* IPR2018-01258, Paper 86, at 86–115. Unlike in *Google v. CyWee*, where CyWee filed a separate motion to terminate the

[20] On August 13, 2019, we granted in part CyWee's motion for additional discovery relating to the real-party-in-interest issue. *See* Paper 20.

proceeding, in this proceeding CyWee only addresses the issue in one paragraph of its Patent Owner Response. *See* PO Resp. 62–63. CyWee does not explain, with any specificity, why Exhibits 2008–2014 show that LGE, Samsung, Huawei, or any other entity is a real party in interest or privy to this *inter partes* review. To the extent that CyWee is relying on the same arguments it presented in *Google v. CyWee*, we adopt the reasoning of the Board in that case. The Board determined, among other things, that LGE, Samsung, and ZTE were not real parties in interest or privies because of their dealings with Google in relation to the Android operating system, or through their joint activities as defendants in prior litigation. *See* IPR2018-01258, Paper 86, 99–115. Therefore, we do not find CyWee's arguments persuasive and do not terminate the proceeding on the basis of a time bar.

IV. GROUNDS OF THE PETITION

For the reasons below, we determine that ZTE has shown, by a preponderance of the evidence, that claims 1, 4, 5, 14–17, and 19 are unpatentable under § 103. Before analyzing the Petition's two asserted grounds in detail, we address two matters that will underlie our analysis: the level of ordinary skill in the art, and the claim construction we will apply to the claim terms.

A. LEVEL OF ORDINARY SKILL IN THE ART

The level of ordinary skill in the pertinent art is one of the factual considerations relevant to patentability under § 103. *See Graham v. John Deere Co.*, 383 U.S. 1, 17–18 (1966). It is also relevant to how we construe the patent claims. *See Phillips v. AWH Corp.*, 415 F.3d 1303, 1312–13 (Fed.

Cir. 2005) (en banc). To assess the level of ordinary skill in the art, we construct a hypothetical "person of ordinary skill in the art," from whose vantage point we assess obviousness and claim interpretation. *See In re Rouffet*, 149 F.3d 1350, 1357 (Fed. Cir. 1998). This legal construct "presumes that all prior art references in the field of the invention are available to this hypothetical skilled artisan." *Id.* (citing *In re Carlson*, 983 F.2d 1032, 1038 (Fed. Cir. 1993)).

ZTE's expert Scott Andrews opines that a person of ordinary skill in the art

> would have been familiar with motion sensors (such as gyroscopes, accelerometers, and magnetometers) and mobile device technology. Such [person] would have, at minimum, a bachelor's degree in computer science, computer engineering, electrical engineering, or a related field, with at least two years of experiences in research, design, or development of pointing devices that utilize[] motion sensors. Extensive experience and technical training may substitute for educational requirements, while advanced education such as a relevant MS or PhD might substitute for experience.

Ex. 1003 ¶ 22; *see also* Ex. 1030 ¶ 32 (same articulation in Mr. Andrews's Rebuttal Declaration). Although CyWee does not contest this articulation of the level of ordinary skill in its Patent Owner Response, CyWee's expert, Professor LaViola, opines that an ordinarily-skilled artisan would have had

> at least a Bachelor's Degree in Computer Science, Electrical Engineering, Mechanical Engineering, or Physics, or equivalent work experience, along with knowledge of sensors (such as accelerometers, gyroscopes, and magnetometers), and mobile computing technologies. In addition, a [person of ordinary skill in the art] would be familiar with Kalman filters and EKFs, and with equations typically used with such filters.

Ex. 2001 ¶ 27.

Thus, Mr. Andrews and Professor LaViola agree that a person of ordinary skill in the art could have had a bachelor's degree in computer science or electrical engineering, while Professor LaViola includes a degree in mechanical engineering or physics. Although Professor LaViola does not specify a particular number of years of work experience, both experts agree that the level of ordinary skill included knowledge of sensors (such as accelerometers, gyroscopes, and magnetometers) and mobile computing technologies. Unlike Mr. Andrews, Professor LaViola opines that a person of ordinary skill would have had familiarity with Kalman filters, extended Kalman filters and equations typically used with such filters.

The 3D pointing device of the '438 patent can be a mobile device and has a computing processor. *See* Ex. 1001, Figs. 3–4. Thus, we agree with both experts that a person of ordinary skill in the art would have had knowledge of mobile computing technologies. The patent also assumes some familiarity with sensors, so we agree with both experts that an ordinarily skilled artisan would have had knowledge of sensor systems.

We find persuasive Mr. Andrews's testimony that the '438 patent makes no explicit reference to a Kalman filter or an extended Kalman filter, and that "those equations disclosed are generic mathematical equations that might be associated with some elements of an [extended Kalman filter], but are not limited to [extended Kalman filters] only." Ex. 1030 ¶ 33. However, we also find persuasive Professor LaViola's testimony that equations 5–10 of the '438 patent reflect the general framework for an extended Kalman filter. *See supra* part II.B. Also, some of the prior art, including Bachmann and Bachmann2 (asserted in opposition to CyWee's Revised Motion to Amend), appears to presume at least some familiarity with Kalman or

extended Kalman filters. Ex. 1007, 9:37–40; Ex. 1032, 2005, 2008; *see also Okajima v. Bourdeau*, 261 F.3d 1350, 1355 (Fed. Cir. 2001) (the prior art itself may reflect the level of ordinary skill). Thus, we agree with CyWee that the level of ordinary skill would have included knowledge of Kalman filters and extended Kalman filters.

In *Google v. CyWee*, the Board also found—and Professor LaViola agreed with the petitioner in that case—that the level of ordinary skill in the field of the ’438 patent included a knowledge of quaternion mathematics. *See* IPR2018-01258, Paper 86, at 15–16 (citing IPR2018-01258, Paper 28, at 29 (petitioner’s reply); IPR2018-01258, Exhibit 1019, 33 (Professor LaViola’s deposition testimony)). Although Professor LaViola does not mention quaternion mathematics in his articulation of the level of ordinary skill in the art for this case, he does not provide any reasons why his testimony in *Google v. CyWee* was in error. Mr. Andrews submitted his Declaration (dated October 31, 2018) before the Board’s final written decision in *Google v. CyWee* (dated January 9, 2020), and his Declaration does not address this issue.

We agree with the Board’s prior finding that the level of ordinary skill in the art includes knowledge of quaternion mathematics. First, we find Professor LaViola’s testimony in the prior case to be credible. *See* IPR2018-01258, Exhibit 1019, 33. Second, the ’438 patent assumes an understanding of quaternions and does not appear to define them for the reader. *See, e.g.*, Ex. 1001, 11:2. Third, the Bachmann reference, which we discuss in more detail below, states that “the field of quaternion mathematics is known to those having ordinary skill in the art and is explained in detail in numerous mathematical texts.” Ex. 1007, 7:25–28. Bachmann describes the relevant

technical field as "methods and apparatus for tracking the orientation . . . of an object." *Id.* at 1:18–20. Such tracking is also one of the concerns of the '438 patent.[21] Thus, the use of quaternions for tracking objects appears to be a solution to a problem that a person of ordinary skill in the art would have encountered. *See In re GPAC, Inc.*, 57 F.3d 1573, 1579 (Fed. Cir. 1995) (stating that the "type of problems encountered in the art" is a factor in determining the level of ordinary skill in the art).

For the above reasons, we adopt the Board's articulation of the level of ordinary skill in the art in *Google v. CyWee*, with one slight modification to include knowledge of extended Kalman filters: a person of ordinary skill in the art would have had "an undergraduate degree in computer science, electrical engineering, mechanical engineering, or other related technical field, and knowledge of sensor systems, mobile computing technologies, Kalman filters, extended Kalman filters, and quaternion mathematics." IPR2018-01258, Paper 86, 16.

We regard this formulation to be essentially the same as that proposed by Professor LaViola, except for the addition of quaternion mathematics. Despite the difference, our decision would be the same had we adopted Professor LaViola's formulation, because if the person of ordinary skill did not have prior knowledge of quaternion mathematics, Bachmann points the reader to mathematical texts about quaternion mathematics that would have allowed an ordinarily skilled artisan to understand Bachmann's teachings and apply them to the claimed inventions. *See* Ex. 1007, 7:25–28.

---

[21] As we discuss below, we find that Bachmann is analogous to the invention recited in the challenged claims. *See infra* part IV.C.3.

B. CLAIM CONSTRUCTION

In an *inter partes* review filed before November 13, 2018, like this one,[22] the Board interprets claims of an unexpired patent using the broadest reasonable construction in light of the specification of the patent in which the claims appear. *See* 37 C.F.R. § 42.100(b) (2018), *amended by* Changes to the Claim Construction Standard for Interpreting Claims in Trial Proceedings Before the Patent Trial and Appeal Board, 83 Fed. Reg. 51,340, 51,359 (Oct. 11, 2018); *Cuozzo Speed Techs., LLC v. Lee*, 136 S. Ct. 2131, 2144–46 (2016) (upholding the use of the broadest reasonable interpretation standard); Office Patent Trial Practice Guide, 77 Fed. Reg. 48,756, 48,766 (Aug. 14, 2012).

Under the broadest reasonable construction standard, each claim term is generally given its ordinary and customary meaning, as one of ordinary skill in the art would have understood that meaning at the time of the invention and in the context of the entire disclosure. *See In re Translogic Tech., Inc.*, 504 F.3d 1249, 1257 (Fed. Cir. 2007); *Trivascular, Inc. v. Samuels*, 812 F.3d 1056, 1062 (Fed. Cir. 2016). A term's ordinary and customary meaning "is its meaning to the ordinary artisan after reading the entire patent." *Phillips*, 415 F.3d at 1321. Nevertheless, "it is always necessary to review the specification to determine whether the inventor has used any terms in a manner inconsistent with their ordinary meaning," because "[t]he specification acts as a dictionary when it expressly defines terms used in the claims or when it defines terms by implication." *Vitronics Corp. v. Conceptronic, Inc.*, 90 F.3d 1576, 1582 (Fed. Cir. 1996).

---

[22] The filing date of the Petition was October 31, 2018. *See* Paper 3, 1.

For evaluating the challenged claims, ZTE argues that "all terms in the challenged claims should be given their plain meaning to a [person of ordinary skill in the art] at the time the patent application was filed." Pet. 10–11. ZTE particularly addresses the alleged plain meaning of the terms "three-dimensional (3D) pointing device," "six-axis motion sensor module," "calculating," and phrases in claims 1, 14, and 19 that include the terms "comparison" or "comparing." Pet. 11–14. CyWee proposes a different construction for "three-dimensional (3D) pointing device." *See* PO Resp. 18. Below, we address the above terms, as well as an additional term "attached to the PCB."

1. "Three-dimensional (3D) Pointing Device"

ZTE contends that the preambles of claims 1, 14, and 19 are limiting, and that the preamble term "three-dimensional (3D) pointing device" should be given its "plain and ordinary meaning." Pet. 11 (citing Ex. 1003 ¶ 55–57); ZTE Reply 1–3 (disputing CyWee's proposed construction requiring the device to be "handheld"). ZTE does not explain what it believes the plain and ordinary meaning would be.

CyWee's expert Professor LaViola agrees with ZTE's argument that the term "three-dimensional (3D) pointing device" in the preambles of claims 1, 14, and 19 is limiting. *See* Ex. 2001 ¶ 47. However, CyWee contends that the term should be construed as "a handheld device that detects the motion and orientation of said device in three-dimensions and is capable of translating the detected motions to control an output on a display." PO Resp. 18 (citing Ex. 2001 ¶ 47–50). CyWee contends that this construction is consistent with prior constructions by the Eastern District of

Texas, the District of Delaware, and the Board. *Id.* (citing Ex. 2003, 8; Ex. 2004, 2; Ex. 2006, 6; IPR2018-01258, Paper 7, at 16).

As we discuss below, CyWee does not contest ZTE's assertion that Yamashita discloses the preamble of claims 1, 14, and 19, including the term "three-dimensional (3D) pointing device." *See infra* part IV.C.5(a); *see also infra* parts V.D.2(c)(1), (c)(5) (addressing LGE's corresponding contentions in the Revised Motion to Amend, which CyWee does not contest). Thus, we do not need to construe this term. *See Nidec Motor Corp. v. Zhongshan Broad Ocean Motor Co.*, 868 F.3d 1013, 1017 (Fed. Cir. 2017) ("[W]e need only construe terms 'that are in controversy, and only to the extent necessary to resolve the controversy.'") (quoting *Vivid Techs., Inc. v. Am. Sci. & Eng'g, Inc.*, 200 F.3d 795, 803 (Fed. Cir. 1999))).

2. "Six-axis Motion Sensor Module"

ZTE contends that we should construe the term "six-axis motion sensor module" as "a sensor module that detects movement in terms of three angular velocities ω_x, ω_y, ω_z, and the three axial accelerations Ax, Ay, Az." Pet. 12 (citing Ex. 1003 ¶ 58–60; Ex. 1001, 8:10–12 ("The term 'six-axis' means the three angular velocities ω_x, ω_y, ω_z, and the three axial accelerations Ax, Ay, Az.")). CyWee does not specifically address ZTE's proposed construction. *See* PO Resp. 18.

Independent claims 1, 14, and 19 already explicitly require the motion sensor module to measure three angular velocities ω_x, ω_y, ω_z, and three axial accelerations Ax, Ay, Az. *See* Ex. 1001, 18:61–19:3, 21:19–26, 22:28–35. Because ZTE's proposed construction would add nothing of substance to

the existing claim language, we need not construe the term "six-axis motion sensor module." *See Nidec*, 868 F.3d at 1017.

3. "Calculating"

ZTE contends that the term "calculating" or "to calculate" in claim 1 (Ex. 1001, 19:8, 19:10) should be given its plain and ordinary meaning, which is to "determine the value of something . . . by a mathematical process." Pet. 12 (citing Ex. 1003 ¶ 61). CyWee contends that this term does not need to be construed. PO Resp. 19 (citing Ex. 2001 ¶ 54; Paper 7, 13).

The term appears in limitations 1(h) and 1(i), and CyWee does not contest ZTE's assertion that Yamashita discloses these limitations. *See infra* part IV.C.5(e); *see also* V.D.2(c)(3) (addressing LGE's contentions about corresponding limitations 20(e) and 20(f) in the Revised Motion to Amend, which CyWee does not contest). Thus, we do not need to construe this term. *See Nidec*, 868 F.3d at 1017.

4. "Comparison" and "Comparing"

The challenged claims recite several limitations that refer to a "comparison" or "comparing." Claim 1 recites "utilizing a comparison to compare the first signal set with the second signal set whereby said resultant angles . . . are obtained under said dynamic environments." Ex. 1001, 19:12–17. Also, "the comparison utilized by the processing and transmitting module further comprises an update program to obtain an updated state based on a previous state associated with said first signal set and a measured state associated with said second signal set." *Id.* at 19:17–23. Claims 14 and 19 each recite "comparing the second quaternion . . . with the measured axial accelerations . . . and the predicted axial accelerations," and "comparing the

current state with the measured state." *Id.* at 21:33–37, 40–41, 22:42–46, 49–50.

In district court, ZTE has contended that the terms "comparison" and "comparing" are indefinite. Pet. 13 (citing Ex. 1004, 15–18). For the purpose of its Petition, ZTE assumes that a comparison of two quaternion values involves setting the real parts to zero, and that otherwise, the term should be given its plain and ordinary meaning, which includes "performing calculations based on first and second sensor signals to obtain the deviation angles of the device with respect to the spatial pointing frame." *Id.* (citing Ex. 1003 ¶ 62–65).

CyWee contends that following passage in the '438 patent is an explicit definition of the term "comparison":

> The term of "comparison" of the present invention may generally refer to the calculating and obtaining of the actual deviation angles of the 3D pointing device 110 with respect to the first reference frame or spatial pointing frame X_P Y_P Z_P utilizing signals generated by motion sensors while reducing or eliminating noises associated with said motion sensors.

Ex. 1001, 2:26–32; *see* PO Resp. 19. ZTE disagrees that this passage "rise[s] to the standard of lexicography that would allow for departure from the plain meaning," and argues that the passage is "inconsistent with the plain and ordinary meaning." Pet. 13.

Based on the evidence of record, the '438 patent clearly and unambiguously defines "comparison" as having at least the meaning in the above-quoted passage. Therefore, we construe the terms "comparison" and "comparing" as "the calculating and obtaining of the actual deviation angles of the 3D pointing device . . . with respect to the first reference frame or spatial pointing frame X_P Y_P Z_P utilizing signals generated by motion

sensors while reducing or eliminating noises associated with said motion sensors." *Id.* at 2:28–32.[23]

5. "Attached to the PCB"

Claim 1 recites "a six-axis motion sensor module *attached to the PCB*." Ex. 1001, 18:61 (emphasis added). CyWee argues that neither Yamashita nor Bachmann discloses this limitation. PO Resp. 27–29. While neither party asks us to construe the term "attached to the PCB,"[24] CyWee's arguments depend on the meaning of this term. *See infra* part IV.C.5(d).

The '438 patent has an express definition of the term "printed circuit board (PCB)," which includes multiple PCBs: "[I]t can be understood that a printed circuit board (PCB) recited herein may refer to more than one PCBs such that motion sensors such as rotation sensors or gyroscopes and/or accelerometers of the six-motion sensor module may be attached to more than one PCBs." *Id.* at 18:47–51. In light of this express definition, which is consistent with the remainder of the '438 patent specification and the evidence of record, we conclude that the broadest reasonable interpretation of "attached to the PCB" is "attached to one or more PCBs."

---

[23] In a parallel proceeding involving the '438 patent, the Eastern District of Texas likewise held that the quoted passage specifically defines the term "comparison." *See* Ex. 2004, 10. This is also the construction that the Board adopted in *Google v. CyWee*. *See* IPR2018-01258, Paper 86, 23.

[24] Although ZTE did not ask us to construe the term "attached to the PCB" in its Petition, Mr. Andrews opined in his Rebuttal Declaration that a person of ordinary skill in the art would have understood from the text of the '438 patent that the term can include attachment to more than one PCB. Ex. 1030 ¶ 69–72. We find this testimony persuasive.

C. GROUND BASED ON YAMASHITA AND BACHMANN

In the first ground of the Petition, ZTE argues that claims 1, 4, 5, 14–17, and 19 of the '438 patent would have been obvious over Yamashita in view of Bachmann. Pet. 6.

A claim is unpatentable under § 103(a) for obviousness if the differences between the claimed subject matter and the prior art are "such that the subject matter as a whole would have been obvious at the time the invention was made to a person having ordinary skill in the art to which said subject matter pertains." *KSR Int'l Co. v. Teleflex Inc.*, 550 U.S. 398, 406 (2007). A successful petition must "articulate specific reasoning, based on evidence of record, to support the legal conclusion of obviousness." *In re Magnum Oil Tools Int'l, Ltd.*, 829 F.3d 1364, 1380 (Fed. Cir. 2016) (citing *KSR*, 550 U.S. at 418); *see also* 35 U.S.C. § 322(a)(3); 37 C.F.R. §§ 42.22(a)(2), 42.104(b)(4) (2019). When a ground in a petition is based on a combination of references, we consider "whether there was an apparent reason to combine the known elements in the fashion claimed by the patent at issue." *KSR*, 550 U.S. at 418 (citing *In re Kahn*, 441 F.3d 977, 988 (Fed. Cir. 2006)).

We base our obviousness inquiry on factual considerations including (1) the scope and content of the prior art, (2) any differences between the claimed subject matter and the prior art, (3) the level of skill in the art, and (4) any objective indicia of obviousness or non-obviousness that may be in evidence. *See Graham*, 383 U.S. at 17–18. Considering these factors,[25] we

[25] The parties did not produce evidence about objective indicia of obviousness or non-obviousness, except to the extent this may include teaching away. *See* PO Resp. 24–25, 28; *Ecolochem, Inc. v. S. Cal. Edison*

determine that ZTE has shown, by a preponderance of the evidence, that claims 1, 4, 5, 14–17, and 19 would have been obvious over Yamashita in view of Bachmann.

After providing an overview of Yamashita and Bachmann, we address whether Bachmann is analogous art, ZTE's rationale for combining Yamashita with Bachmann, and the specific limitations of the challenged claims.

1. Overview of Yamashita

Yamashita is a U.S. Patent based on an application filed December 22, 2008, and issued September 18, 2012. Ex. 1006, codes (22), (45). Yamashita's filing date precedes November 11, 2010, the filing date of the '934 application which issued as the '438 patent. *See* Ex. 1001, codes (21), (22). Yamashita's filing date also precedes January 6, 2010, the filing date of the provisional '558 application to which the '438 patent claims priority. *See* Ex. 1001 1:13–15, code (60). CyWee does not present any evidence that any challenged claim antedates Yamashita's filing date. *See* PO Resp. 8–9. Thus, we conclude that Yamashita is prior art to all challenged claims under § 102(e).[26]

Co., 227 F.3d 1361, 1379 (Fed. Cir. 2000) (classifying teaching away as an objective consideration). We address CyWee's teaching-away arguments in the context of whether there was motivation to combine the references. *See infra* parts IV.C.4, IV.C.5(d), note 30.

[26] 35 U.S.C. § 102(e) (2006), *amended by* Leahy–Smith America Invents Act, Pub. L. No. 112-29 § 102, sec. 3(b)(1), 125 Stat. 284, 286 (2011) (effective Mar. 16, 2013).

According to Professor LaViola's undisputed testimony, Yamashita discloses technology associated with the Nintendo Wii Remote (a game controller), and its associated Wii MotionPlus module (an attachable gyrosensor unit). Ex. 2001, ¶ 61. Yamashita's Figure 3, reproduced below, illustrates both the controller and the attachable module:

FIG. 3

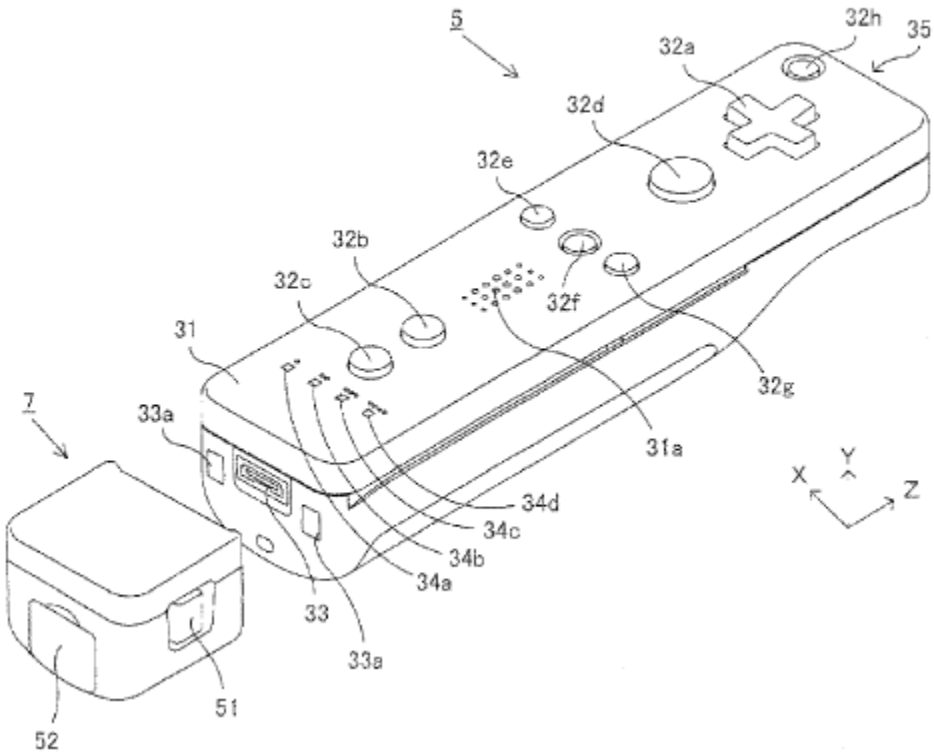

Figure 3 depicts game controller 5, and associated gyrosensor unit 7 in a non-attached configuration. Controller 5 includes housing 31 with various buttons 32a–32h for operating the device. Ex. 1006, 9:42–57. Gyrosensor unit 7 includes gyrosensors "for sensing an angular velocity around the three axes," and is detachably attached on connector 33 of controller 5. *Id.* at 11:14–17.

Figure 7, reproduced below, is a block diagram showing the interior parts of controller 5 and gyrosensor unit 7:

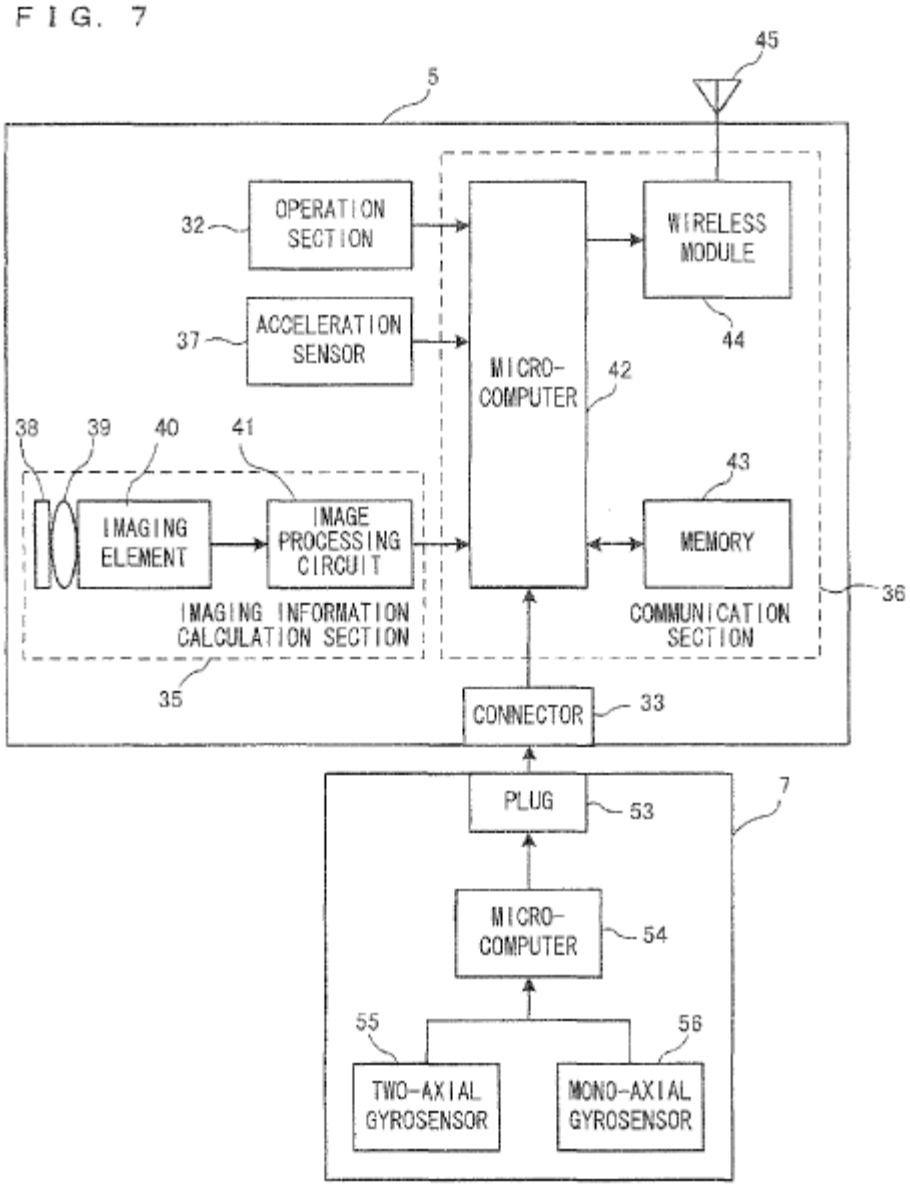

Figure 7 depicts game controller 5 and gyrosensor unit 7. On a substrate (not shown) within game controller 7, acceleration sensor 37 detects acceleration in three axes, and it outputs the acceleration data to communication section 36, which includes microcomputer 42. *Id.* at 10:38–43, 12:62–67, 13:11–13. Connector 33, also on substrate 30, detachably connects to plug 53 on

gyrosensor unit 7. *Id.* at 11:8–9, 16–20. Gyrosensor unit 7 also includes microcomputer 54, and gyrosensors 55 and 56, which sense angular velocity around three axes (X, Y, and Z) and the unit transmits that information to controller 5. *Id.* at 14:28–34.

Yamashita discloses that one may calculate the estimated posture (i.e., orientation) of controller 5 with reference to the measured acceleration and angular velocity. *Id.* at 19:29–40. Yamashita's Figure 23, a relevant portion of which we reproduce below, is an overview of processing steps for making this calculation:

FIG. 23

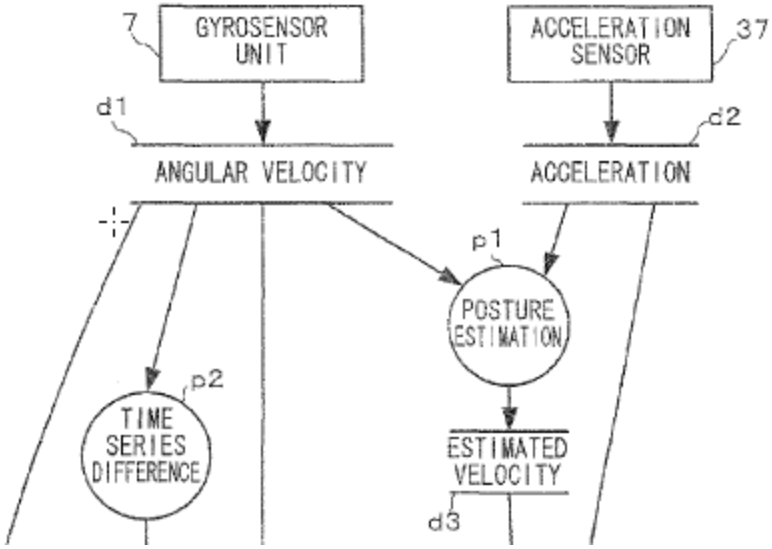

This reproduced portion of Figure 23 depicts angular velocity data d1 from gyrosensor unit 7 and acceleration data d2 from acceleration sensor 37, which are combined in posture estimation step p1 to produce estimated posture d3.[27] *Id.* at 19:1–8. According to Yamashita, "any method is usable"

[27] Although Figure 23 labels d3 as "estimated velocity," the associated text refers to d3 as an "estimated posture." Ex. 1006, 19:8, 41, 44.

for "calculating the estimated posture based on the acceleration and the angular velocity." *Id.* at 19:8–10.

2. Overview of Bachmann

Bachmann is a U.S. Patent that issued August 8, 2006. Ex. 1007, code (45). This predates, by more than a year, the earliest priority date asserted in the '438 patent, which is January 6, 2010. *See* Ex. 1001 1:13–15, code (60). Thus, we conclude that Bachmann is prior art to all challenged claims under 35 U.S.C. § 102(b) (2006).

Bachmann describes "a method of determining an orientation of a sensor," Ex. 1007, code (57), and particularly "for tracking the posture of articulated rigid bodies using quaternion based attitude estimation filtering and displaying the posture of the body." Ex. 1007, 1:19–20, 1:23–26. For example, "a plurality of sensors, each mounted to a limb of an articulated rigid body[,] can be used to track the orientation of each limb." *Id.* at 5:26–28.

Figure 4, reproduced below, shows an example of using the sensors to track human limbs:

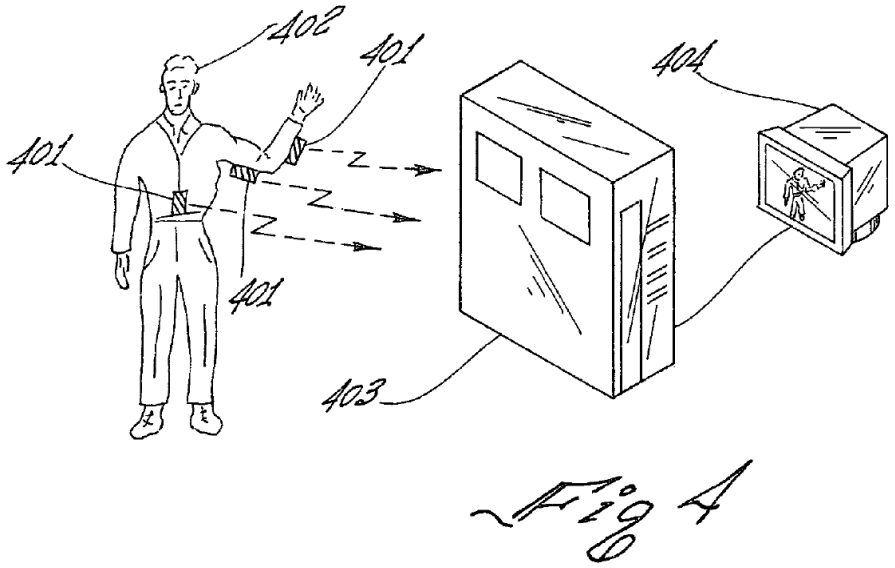

Figure 4, above, shows an embodiment "of an overall system implementation in accordance with the principles" described by Bachmann. Ex. 1007, 13:33–35. This overall system uses three sensors 401 to track the posture of human body 402. *Id.* at 13:35–36, 13:64–67. Sensors 401 send sensor information to processing unit 403, which calculates the posture of body 402 and outputs a display signal to display 404, "thereby enabling the movement of the articulated rigid body 402 to be incorporated into a synthetic or virtual environment and then displayed." *Id.* at 14:23–26.

In one embodiment, "the sensors include a three-axis magnetometer and a three-axis accelerometer." *Id.* at 7:34–35. In another embodiment, "the magnetometers and accelerometers are supplemented with angular rate detectors configured to detect the angular velocity of the sensor (comprising so-called Magnetic, Angular Rate, Gravity (MARG) sensors)." *Id.* at 7:35–40. Thus, "[e]ach MARG sensor contains angular rate detectors, accelerometers, and magnetometers." *Id.* at 7:40–41; *see also id.* at 14:37–59 (describing a commercially available MARG sensor).

In addition to tracking the posture of a human body as shown in Figure 4, Bachmann teaches that the disclosed sensors "can be used to track motion and orientation of [other] simple rigid bodies as long as they are made of non-magnetic materials. Examples include, but are not limited to hand-held devices, swords, pistols, or simulated weapons." Ex. 1007, 13:43–51; *see also id.* at 13:57–62 (suggesting use of the sensors to track "non-magnetic prosthetic devices, robot arms, or other machinery").

Bachmann uses an "attitude estimation filter," in conjunction with data supplied by the sensors, "to produce a sensor orientation estimate expressed in quaternion form." Ex. 1007, 7:18–19, 7:32–34. Figure 3 of Bachmann is a block diagram of this filter:

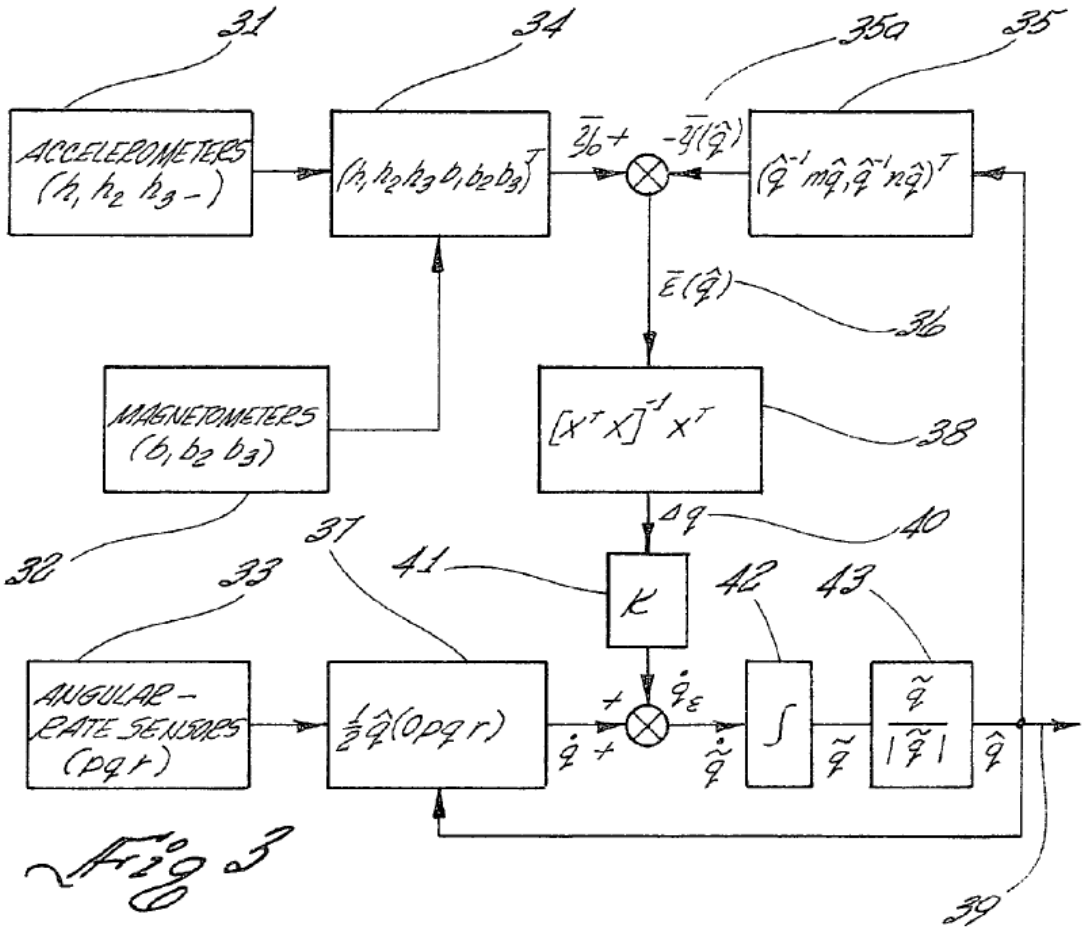

Fig 3

In broad terms, the filter shown above in Figure 3 takes three-axis acceleration data (h_1, h_2, h_3) from accelerometer 31, three-axis magnetic field data (b_1, b_2, b_3) from magnetometer 32, and three-axis angular rate data (p, q, r) from angular rate sensor 33, and combines the nine axes of sensor data to output a quaternion representation $\hat{q}$ (39) of the orientation of the tracked object. Ex. 1007, 10:10–14.

The accelerator and magnetometer data (31 and 32) are considered to be "complementary" to angular rate data (p, q, r) (box 33). According to Bachmann, if angular rate data (p, q, r) were perfectly accurate, it could be used, directly, to calculate rate quaternion $\dot{q}$ (box 37) based on the sensor reference frame using quaternion $\hat{q}$ representing the current orientation. *See* Ex. 1007, 10:18–32. Rate quaternion $\dot{q}$ could then be converted, iteratively, to the new orientation quaternion $\hat{q}$ by integration 42 and normalization 43. *See id.* at 10:33–36.

However, to account for the fact that the angular rate sensors drift over time, $\dot{q}$ must be continuously corrected using the "complementary" accelerator and magnetometer data. Ex. 1007, 10:36–42. In other words, to correct three-axis angular rate sensor data (p, q, r) in box 33, Bachmann's system "uses measurements of local magnetic field 32 and local gravity 31 to correct the angular rate information [$\dot{q}$]." *Id.* at 9:55–58. The correction to measured rate quaternion $\dot{q}$ uses Gauss-Newton iteration 38. *Id.* at 10:42–45. The Gauss-Newton iteration yields correction factor $\dot{q}_\varepsilon$, which is added to rate quaternion $\dot{q}$ before integration. *See id.*, Fig. 3 (output $\dot{q}_\varepsilon$ to box 41, which is added to $\dot{q}$).

To obtain correction factor $\dot{q}_\varepsilon$, Bachmann's filter combines accelerometer 31 and magnetometer 32 measurements into a single vector

$\vec{y}_0$ (34). *See* Ex. 1007, 8:37–51. The filter then compares measurement vector $\vec{y}_0$ with calculated vector $\vec{y}(\hat{q})$ (box 35a), which is calculated by applying a physical model to updated orientation estimate $\hat{q}$. *See id.* at 8:52–9:8, 9:65–10:2. Measurement error $\vec{\varepsilon}(\hat{q})$ (box 36) is the difference between measurement vector $\vec{y}_0$ and calculated vector $\vec{y}(\hat{q})$. *Id.* at 9:13, 10:2–5.

In box 38, the filter uses Gauss-Newton iteration to minimize the square of error vector $\vec{\varepsilon}(\hat{q})$. *See id.* at 9:18–35, 10:2–9, 10:42–45. The Gauss-Newton iteration calculates Δq_{full} (40) using equation 12, also shown in box 38:

$$\Delta q_{full} = [X^T X]^{-1} X^T \vec{\varepsilon}(\hat{q})$$

where $\vec{\varepsilon}(\hat{q})$ is measurement error 36 and X is the following matrix:

$$X_{ij} = \left[\frac{\partial y_i}{\partial q_j}\right]$$

Ex. 1007, 10:46–65. Because the value of Δq_{full} is corrupted by noise, the filter accounts for the noise by using a scalar multiple (filter gain k in box 41). *Id.* at 10:66–11:12. The result of the Gauss-Newton iteration is the following equation 16, for each time step:

$$\hat{q}_{n+1} = \hat{q}_n + \frac{1}{2}\hat{q}^B \omega \Delta t + \alpha [X^T X]^{-1} X^T \varepsilon(\hat{q}_n)$$
$$\hat{q}_n + k\Delta t \Delta q_{full} + \dot{q}_{measured} \Delta \mathrm{t}$$

Id. at 11:15–20. According to uncontested testimony by Mr. Andrews, the term $\frac{1}{2}\hat{q}^B \omega \Delta t$ "represents the measured angular rate converted from the sensor reference frame to the earth reference frame." Ex. 1003 ¶ 162. Equation 16 shows how to calculate the next estimate of sensor orientation $\hat{q}_{n+1}$ (at time $n+1$) based on the various inputs. *See id.* at 11:12–14.

3. Whether Bachmann is Analogous Art

"To be considered within the prior art for purposes of the obviousness analysis, a reference must be analogous." *Circuit Check Inc. v. QXQ Inc.*, 795 F.3d 1331, 1335 (Fed. Cir. 2015) (citing *Wang Labs., Inc. v. Toshiba Corp.*, 993 F.2d 858, 864 (Fed. Cir. 1993)). We therefore address CyWee's contention that Bachmann is not analogous to the claimed invention. *See* PO Resp. 19–23.

Two separate tests define the scope of analogous prior art: (1) whether the art is from the same field of endeavor, regardless of the problem addressed; and (2) if the reference is not within the field of the inventor's endeavor, whether the reference is still "reasonably pertinent to the particular problem with which the inventor is involved." *In re Bigio*, 381 F.3d 1320 (Fed. Cir. 2004). CyWee contends that Bachmann does not satisfy either test. *See* PO Resp. 19–23.

Regarding the first test, ZTE argues that Bachmann is in the same field as the '438 patent. *See* Pet. 25. Although ZTE did not explain the scope of that field in the Petition, ZTE argues in its Reply that the field of endeavor "relates to the calculation of orientation from motion sensors generally." ZTE Reply 6.

In contrast, CyWee argues that "[t]he field of endeavor of the '438 Patent is handheld '3D Pointing Devices,' or, alternatively and more broadly, handheld 'pointing devices and their applications.'" PO Resp. 21 (citing Ex. 2001 ¶ 87); *id.* at 19 (citing Ex. 2001 ¶ 83). CyWee's articulation depends on its proposed construction of the term "3D pointing device," which according to CyWee means "a handheld device that detects the motion and orientation of said device in three-dimensions and is capable of translating the detected

motions to control an output on a display." PO Resp. 18 (citing Ex. 2001 ¶ 47–50); *see also id.* at 20 (acknowledging that CyWee's articulation of the field of endeavor depends on its proposed construction of "3D pointing device"); *supra* part IV.B.1. According to CyWee, since Bachmann does not relate to a "3D pointing device" as CyWee construes that term, it cannot be in the same field of endeavor as the '438 patent. PO Resp. 22 (citing Ex. 2001 ¶ 88).

As we discuss above, we do not need to construe the term "3D pointing device" for this decision, because CyWee does not contest that Yamashita discloses a 3D pointing device. *See supra* part IV.B.1. But we find CyWee's argument persuasive that the field of invention of the '438 patent involves 3D pointing devices, given that the '438 patent specification characterizes the field as such, and all the claimed inventions concern 3D pointing devices. *See* Ex. 1001, 1:15–26 (characterizing the field of invention as relating to a 3D pointing device), 18:54–22:54 (claims 1–19).

Although Bachmann teaches that the disclosed sensors can be used to track simple rigid bodies including "hand-held devices," *see* Ex. 1007, 13:43–51, and that movements of these bodies can "be incorporated into a synthetic or virtual environment and then displayed," *id.* at 14:23–26, ZTE has not persuasively shown that Bachmann involves a 3D pointing device in the sense that this term is used in the '438 patent. Thus, we find that ZTE has not shown, by a preponderance of the evidence, that Bachmann is in the same field of endeavor as the '438 patent.

Next, we turn to the second test for analogous art: whether Bachmann is reasonably pertinent to the challenged claims. This requires us to evaluate whether Bachmann "logically would have commended itself to an inventor's

attention in considering [the] problem." *In re Icon Health and Fitness, Inc.*, 496 F.3d 1374, 1379–80 (Fed. Cir. 2007) (quoting *In re Clay*, 966 F.2d 656, 658 (Fed. Cir. 1992)). "If a reference disclosure has the same purpose as the claimed invention, the reference relates to the same problem, and that fact supports use of that reference in an obviousness rejection." *Clay*, 966 F.2d at 659.

ZTE alleges that Bachmann addresses "the problems of improving the accuracy of the orientation calculation," as shown in more detail in ZTE's claim charts. Pet. 25 (citing Ex. 1003 ¶ 91); *see also* ZTE Reply 10; Ex. 1030 ¶¶ 53–54 (additional testimony by Mr. Andrews). CyWee frames the problem more narrowly: "The '438 Patent is involved with the problem of compensating accumulated errors of signals of a 3D Pointing Device using a six-axis sensor module for the purposes of being able to better map the dynamic movements of that Pointing Device onto a display and more precisely control that display." PO Resp. 22 (citing Ex. 2001 ¶ 89); *accord id.* at 20.

For the reasons below, we find ZTE's argument persuasive, and agree that Bachmann would have logically commended itself to an inventor's attention when considering the problem as ZTE frames it.

In describing the problem to be addressed by the '438 patent, the "Description of the Related Art" section in the '438 patent emphasizes perceived deficiencies with the prior art. These include the need for "an improved pointing device *with enhanced calculating or comparison method* capable of accurately obtaining and calculating actual deviation angles in the spatial pointer frame." Ex. 1001, 3:52–57 (emphasis added). The '438 patent also highlights "a need to provide *an enhanced comparison method*

applicable to the processing of signals of motion sensors such that errors and/or noises associated with such signals or fusion of signals from the motion[] sensors may be corrected or eliminated." *Id.* at 3:62–66 (emphasis added).

CyWee's expert Professor LaViola confirms that one focus of the claimed invention is to "appl[y] a novel enhanced comparison method to reduce and remove errors and noise in the sensor readings that normally accumulate over time in order to better map the movements of the device and have the capability to more precisely control a display." Ex. 2001 ¶ 31 (citing Ex. 1001, 4:20–43); *see also id.* ¶ 35 ("The '438 Patent further discloses and claims an enhanced method for comparing the various signal sets that is capable of eliminating the errors and noise that accumulate over time." (citing Ex. 1001, 4:20–30))); *id.* ¶ 38 (stating that, because miniature accelerometers that existed prior to the '438 patent could not distinguish between different types of acceleration, "an enhanced filter method is necessary to remove extraneous readings of other types of acceleration as high-frequency noise to produce a more accurate reading.").

We agree with CyWee that, in relation to the claimed invention, there are other aspects of concern beyond the need for improved error compensation, such as using the enhanced error compensation to capture full 3D information and outputting the pointing device's movement pattern on a display frame. *See* Ex. 1001, 2:47–55 (noting that a prior art pointing device with a five-axis motion sensor did not output deviation angles in a 3D reference frame), 3:66–4:2 (recognizing a need to map 3D deviations to a 2D reference frame). But these are complementary aspects of the overall problem faced by an inventor, and do not diminish the fact that improving

error compensation with an enhanced comparison method is a central problem of the claimed invention.

Furthermore, while the ’438 patent describes mapping movements of the pointing device to a 2D display in order to control the display, none of the challenged claims include such mapping as a limitation. *See, e.g.*, Ex. 1001, 18:54–26 (claim 1, referring to a “spatial pointer reference frame,” but not including any step of mapping movements or rotations from that frame onto a display reference frame); *but see id.* at 22:9–16 (claim 18, not challenged in the Petition, which includes such a “mapping step”). Thus, for these claimed inventions, the mapping step was not directly an issue of concern.

Based on this understanding of the problem confronting an inventor with respect to the challenged claims, we find that Bachmann logically would have commended itself to an inventor’s attention. The filtering method illustrated in Bachmann’s Figure 3, reproduced above, illustrates the collection of data from the same kinds of sensors used in the ’438 patent. *See* Ex. 1007, Fig. 3 (boxes 31 and 33). And Bachmann repeatedly comments on the ability of its method to correct for the same kinds of errors that are of concern in the ’438 patent. *See id.* at 7:10–12 (“[A]ngular velocity information can be used to correct for time lag errors.”), 7:42–45 (“Unlike[] other sensors known in the art, sensor embodiments of the invention can correct for drift continuously without any requirement for still periods.”), 8:29–31 (“Determination of this local gravity vector allows the local vertical to be determined allowing correction of orientation relative to a vertical axis.”), 8:33–34 (“This information can be used to correct rate sensor drift errors in the horizontal plane.”), 9:54–58 (“[S]uch a filtering embodiment

measures angular rate information 33, and uses measurements of . . . local gravity 31 to correct the angular rate information or integrated angular rate information.”).

In finding that Bachmann is an analogous reference, we have also considered three rebuttal arguments by CyWee, which we find unpersuasive. First, CyWee argues that Bachmann “expressly teaches away from using its sensor system and sensor fusion method with devices made of magnetic materials . . . such as smartphones or game controllers that could be used as 3D Pointing Devices.” PO Resp. 22–23 (citing Ex. 1007, 13:42–47; Ex. 2015 ¶ 9). As we discuss below, we disagree that Bachmann teaches away from the claimed invention. *See infra* part IV.C.4.

Second, CyWee argues that “while Bachmann references handheld devices, it expressly teaches that its invention is meant for use with articulated rigid objects.” *Id.* at 23 (citing Ex. 1007, 13:49:51). While Bachmann teaches using its filter for tracking articulated rigid objects, CyWee does not point to any evidence that a person of ordinary skill in the art would have been dissuaded from using the filter in other ways, such as in a 3D pointing device.

Finally, CyWee argues that a search on Google Patents using the words “pointing device” yielded about 199,000 patents and publications, but none of them cited Bachmann. PO Resp. 23 (citing urls linking to search results). According to CyWee, this supports Professor LaViola’s opinion that Bachmann would not have logically commended itself to the problem of “using a handheld 3D pointing device to control a display and compensating for accumulated sensor errors of such a device.” *Id.* (citing Ex. 2001 ¶¶ 83–90).

We find CyWee's search results unpersuasive, given that an inventor's area of concern involves the problem of compensating for accumulated sensor errors, and not merely the design or use of a pointing device. We also afford this argument less weight than other evidence of record, such as Professor LaViola's testimony that Bachmann's work, including his patent, came up when he was doing predictive motion tracking research around the year 2001. Ex. 1020, 77:3–23; *see also* ZTE Reply 10–11 (arguing that in *Google v. CyWee*, Google contended that it had performed a different search that returned contrasting results to that of CyWee (citing Ex. 1029, 10)).

In light of the arguments and evidence discussed above, we find that Bachmann logically would have commended itself to an inventor's attention in considering the problem of compensating accumulated measurement errors in a six-axis motion sensor. Thus, Bachmann is analogous to the claimed invention of the '438 patent.

4. Combination of Yamashita and Bachmann; Teaching-Away

ZTE contends that a person of ordinary skill in the art at the time of the claimed invention would have had reason "to use Yamashita's game console device with Bachmann's sensors and filter calculations." Pet. 22. In particular, ZTE notes that Yamashita teaches "that a key reason for using the combined acceleration and angular velocity sensors is to compensate for errors," but acknowledges "that the described solution still exhibits errors when the device is moving. *Id.* (citing Ex. 1006, 1:29–40, 1:49–60; Ex. 1003 ¶¶ 84–85). According to ZTE, a person of ordinary skill in the art "would have understood that [using] additional sensors, and additional types of

sensors" beyond those that Yamashita describes, "would have yielded at least better error and noise control." *Id.* (citing Ex. 1003 ¶ 83).

Thus, ZTE argues that a person of ordinary skill in the art would have had reason to use Bachmann's filter and commercially available nine-axis MARG sensor module to further reduce the errors in Yamashita's pointing device. Pet. 22–23 (citing Ex. 1007, 14:37–57; Ex. 1003 ¶¶ 86–87); *see also* Pet. 24 (citing Ex. 1003 ¶ 89). ZTE contends that an ordinarily skilled artisan "would have been able to integrate these sensors into Yamashita's device using standard conditioning circuits, samplers and analog-to-digital converters, making adjustments as necessary." Pet. 24 (citing Ex. 1003 ¶ 89).

ZTE also argues that an ordinarily skilled artisan would have used Bachmann's filter with the combination because "those filter techniques were adapted directly to MARG sensors," and Bachmann teaches that "quaternion-based [filter] techniques are computationally more efficient" than non-quaternion-based techniques because they "avoid singularities that might otherwise occur at certain sensor orientations." Pet. 23 (citing Ex. 1007, 5:33–7:45; Ex. 1003 ¶ 88).

According to ZTE, a person of ordinary skill in the art would have expected success in combining Yamashita with Bachmann because "[i]n the timeframe, microcomputers and microcontrollers with sufficient power to implement Bachmann's filter were readily available," and the calculations for transforming Bachmann's orientation output into Euler angles was "well-known and that was the conventional form of such output." Pet. 24 (citing Ex. 1003 ¶ 90).

In response, CyWee argues that a person of ordinary skill in the art "would not have been motivated to combine *Yamashita* and *Bachmann*," in

part because Bachmann "merely contemplates mounting its sensor systems on props for motion tracking; it does not teach incorporating its sensor systems into other electronic devices." PO Resp. 24 (citing Ex. 1007, 13:42–51, Ex. 2001 ¶ 58; Ex. 2015 ¶ 9). Although CyWee acknowledges that Bachmann refers to "handheld" devices, CyWee contends that "it expressly teaches that its invention is meant for use with articulated rigid objects." PO Resp. 24 (citing Ex. 1007, 13:49–51).

We do not find CyWee's argument persuasive. Although Bachmann specifically teaches using the filter in combination with sensors attached to articulated rigid objects, CyWee does not adequately explain why this teaching would have dissuaded an ordinarily skilled artisan from combining the filter with a 3D pointing device. *See Syntex (U.S.A.) LLC v. Apotex, Inc.*, 407 F.3d 1371, 1380 (Fed. Cir. 2005) ("[A] prior art reference that does not specifically refer to one element of a combination does not, per se, teach away. If it did, only references that anticipate could be used to support an obviousness analysis.").

Next, CyWee contends that Bachmann "expressly teaches away from using its sensor system and fusion method on any rigid bodies made of magnetic materials." PO Resp. 24 (citing Ex. 1007, 13:42–47; Ex. 2015 ¶ 9).

As background, we note that Bachmann's sensors contain a three-axis magnetometer, and the filter "uses measurements of local magnetic field 32 . . . to correct the angular rate information or integrated angular rate information." Ex. 1007, 9:55–58. However, Bachmann notes that the magnetometer measurements are not "perfect measurements of . . . the local magnetic field," and are "frequently corrupted by noise." *Id.* at 10:66–11:1. Bachmann uses a correction factor to account for this noise, *id.* at 11:1–12,

and teaches that the MARG sensor should be calibrated to account for variations in the direction of the local magnetic field, *id.* at 14:60–67. Thus, Bachmann expresses a general concern for the accuracy of the magnetometer measurements, and states that the disclosed sensors "can be used to track motion and orientation of simple rigid bodies as long as they are made of non-magnetic materials." Ex. 1007, 13:43–47.

CyWee, relying on Professor LaViola's testimony, argues that "[g]aming consoles, smartphones, and other devices that can be used as 3D pointing devices contain a variety of magnets and magnetic materials that would distort the magnetic field measurements in *Bachmann*." PO Resp. 24 (citing Ex. 2015 ¶ 9). In particular, Professor LaViola opines that Yamashita's Wii Remote "contains such a speaker and other magnetic materials of the kind that would interfere with the sensor system and fusion method of *Bachmann*." Ex. 2015 ¶ 9. Such other magnetic materials would include, in his view, "many internal steel and gold parts, digital compasses, and often times the housing of such devices." *Id.*

Mr. Andrews disagrees. Ex. 1030 ¶ 45. First, he opines that Professor LaViola "does not elaborate on his general assertion that metal components may disrupt magnetic fields." Ex. 1030 ¶ 45. Rather, according to Mr. Andrews, a person of ordinary skill in the art "would have understood that the mere presence of metallic parts may or may not affect magnetic fields," particularly if the metal is non-ferrous. *Id.* Mr. Andrews also takes issue with Professor LaViola's opinion that digital compasses would affect the magnetic field, "since a digital compass would itself be the device used t[o] *measure* the magnetic field." *Id.*; *see also id.* ¶ 46 (describing how the digital compass used in the iPhone 4 included a calibration process to account for

localized effects of nearby magnetic components). Mr. Andrews also cites Professor LaViola's deposition testimony in which he agreed that gold is not magnetic, and that he believed (but was not sure) that non-magnetized steel is not magnetic. *Id.* ¶ 45 (citing Ex. 1028, 128:19–129:10).

Mr. Andrews also testifies that as of the filing date of the '438 patent, "numerous handheld devices were in existence that included magnetic field measurement capability, and these devices were designed in such a way that the magnetic measurement was not affected by the components of the device, or those components had no effect on such measurements." Ex. 1030 ¶ 45. In particular, he opines that "numerous devices were available that included both speakers and magnetic measurement devices." *Id.* ¶ 46; *see also id.* ¶ 63 (opining that in the ten years between Bachmann and the filing date of the '438 patent, integration of magnetometers in devices containing metal parts and speakers had become commonplace). Thus, Mr. Andrews opines that Professor LaViola's "assertion that [a person of ordinary skill in the art] would be disinclined to use the processing method described by Bachmann in the system of Yamashita because of concerns about magnetic interference are not supported by systems in common use at the time the '438 patent application was filed." *Id.* ¶ 47. Mr. Andrews also opines that the challenged claims do not require a speaker, so the speaker in Yamashita's device could simply be omitted in the Yamashita–Bachmann combination if it caused a problem. *See* Ex. 1030 ¶ 63.

We find the testimony of Mr. Andrews more persuasive on this point than that of Professor LaViola. We also note that the "Background of the Invention" section of the '558 provisional application states that "[c]ompensation to the accumulated error may be done by calibration with

reference to a magnetic direction . . . detected by a magneto-resistance . . . sensor equipped in the 3D pointing device," and gives examples of such calibration in the prior art. Ex. 2017 ¶ 4. This teaching is incorporated by reference into the '438 patent. *See* Ex. 1001, 1:7–11. Thus, the '438 patent acknowledges that it was known in the prior art to calibrate magnetic sensors to compensate for errors in the measured magnetic field direction.

Thus we find that the evidence does not support CyWee's argument that, as of the date of the claimed invention, a person of ordinary skill in the art would have been dissuaded from incorporating Bachmann's MARG sensor and filter into a device containing common magnetic components, such as speakers, found in Yamashita's device or other mobile devices such as smartphones.

Our finding is consistent with the Board's finding in *Google v. CyWee*, based on similar testimony by the petitioner's expert Professor Sarrafzadeh, that Bachmann does not teach away from adding sensors to devices that may include magnetic material, provided that such devices are not "made of" magnetic material in the sense that they produce a significant magnetic field, relative to the Earth's magnetic field. *See* IPR2018-01258, Paper 86, 36–37.

LGE also addressed this issue in its Opposition to CyWee's Revised Motion to Amend, and our finding is consistent with LGE's supporting testimony by Professor Michalson. Opp. RMTA 19–20 n.11 (citing Ex. 1051 ¶ 61, n.8 (testimony by Professor Michalson)). Professor Michalson considered Professor Sarrafzadah's testimony in *Google v. CyWee*, and concurs in his opinion. *See* Ex. 1051 ¶ 61 n.8 (citing Ex. 1058 ¶¶ 4–12 (Professor Sarrafzadah's testimony in *Google v. CyWee*)). According to Professor Michalson, "Bachmann's mention of 'non-magnetic materials'

(Ex. 1007, 13:45–46) does not teach away from the combinations proposed here." *Id.* Like Professor Sarrafzadah, he opines that "non-magnetic materials" only refers to "devices that would generate significant magnetic fields," and Bachmann's use of the term "made of" only "refers to a device encase[d] in a magnetic housing or something similar," but not devices such as smartphones, which "do not produce significant magnetic fields." *Id.* Although CyWee questioned the credibility of Professor Michalson's testimony in its Reply because he refers to himself in the third person, CyWee did not specifically rebut the substance of his testimony, which we find persuasive. *See* PO Reply RMTA 1; *supra* part II.D.3.

Next, CyWee argues, based on testimony by Professor LaViola, that a person of ordinary skill in the art would not have been motivated to combine Yamashita with Bachmann "because the claimed methods and apparatuses of the two patents are already complete solutions to the problem of correcting for errors in motion sensing that approach a problem with differing methods." PO Resp. 25 (citing Ex. 2001 ¶ 91).[28]

---

[28] In its Preliminary Response, CyWee also argued that combining Yamashita and Bachmann "would take undue experimentation to create an operable device." Paper 6, 36. The Board addressed this argument while instituting this *inter partes* review. *See* Paper 7, 24–25. However, this argument does not appear in the Patent Owner Response, so it appears that CyWee has abandoned it. *See* Paper 8, 8 ("Patent Owner is cautioned that any arguments for patentability not raised in the response may be deemed waived."); *see also In re NuVasive, Inc.*, 842 F.3d 1376, 1380–81 (Fed. Circ. 2016) (holding that a patent owner waived arguments that were not raised in its response after institution); CTPG 66 ("The [patent owner] response should identify all the involved claims that are believed to be patentable and state the basis for that belief."). Also, we find persuasive Mr. Andrews's testimony that CyWee's undue experimentation argument is irrelevant, given

This argument is not persuasive, because ZTE's combination is of Yamashita's game controller with Bachmann's sensors and filter. *See* Pet. 22; *see also* Ex. 1030 ¶ 59 (Mr. Andrews stating that the asserted combination is "Yamashita's game console device with Bachmann's sensors and filter calculations." (emphasis omitted) (quoting Ex. 1003 ¶ 84)). Thus, ZTE does not propose that a person of ordinary skill in the art would have needed to combine the tracking methods of Yamashita and Bachmann.

Moreover, Yamashita discloses that "[f]or calculating the estimated posture based on the acceleration and angular velocity, any method is usable." Ex. 1006, 19:8–10. Yamashita therefore invites the use of other posture estimation algorithms such as that of Bachmann, which, like Yamashita, estimates posture based on acceleration and angular velocity data. *See* Ex. 1006, Fig. 3.

In testimony that we find persuasive, Mr. Andrews also opines that Yamashita expresses a shortcoming in its tracking method when the device is moving. Ex. 1003 ¶ 84–85 (citing Ex. 1006, 19:29–40). He opines that "Bachmann, on the other hand, provides computation methods that allow[one to] compensate for errors when the device is moving." Ex. 1030 ¶ 65. We also find Mr. Andrews's testimony persuasive that Bachmann's filter is "a more efficient error control algorithm" than that of Yamashita because Bachmann uses "a feedback system." *Id.*

Finally, CyWee argues that Bachmann was "only identified through the impermissible application of hindsight bias," because Mr. Andrews "testified that he searched for prior art based on a study of the '438 patent."

---

that the Yamashita–Bachmann combination does not require combining the two references in the way that CyWee suggests. Ex. 1030 ¶ 62.

PO Resp. 26 (citing Ex. 2016, 228:11–15). According to CyWee, "[u]sing the patent as a template to identify the prior art is an example of impermissible hindsight bias." *Id.* (citing *Ecolochem, Inc. v. S. Cal. Edison Co.*, 227 F.3d 1361, 1371–72 (Fed. Cir. 2000)).

We disagree that ZTE's patent search involved impermissible hindsight. It is permissible to study the challenged patent before searching for relevant prior art, because the scope of the claimed invention determines the scope of the relevant prior art. Improper hindsight does not relate to the prior art search, but to the way in which one combines the prior art references, once identified: "so long as [a reconstruction of prior art] takes into account only knowledge which was within the level of ordinary skill at the time the claimed invention was made and does not include knowledge gleaned only from applicant's disclosure, such a reconstruction is proper." *In re McLaughlin*, 443 F.2d 1392, 1395 (CCPA 1971). *Ecolochem* does not suggest otherwise. In that case, the Federal Circuit held that there was improper hindsight, not because the patent challenger used the patent as a guide to identify relevant prior art, but because the district court improperly used the challenged patent as a blueprint to combine the *identified* prior art without discussing any specific evidence of a motivation to combine. *See* 227 F.3d at 1372.

Based on all the above evidence, we find that a person of ordinary skill in the art would have had reason to combine Yamashita's pointing device with Bachmann's filter and sensors. We discuss that motivation in more detail, below, with respect to the individual claim limitations.

5. Comparison of the Challenged Claims with Yamashita and Bachmann.

The Petition includes a limitation-by-limitation analysis comparing the challenged claims with Yamashita and Bachmann. Pet. 31–60. Based on ZTE's analysis, and taking into consideration CyWee's opposing arguments and evidence, we find that ZTE has shown by a preponderance of the evidence that the combination of Yamashita and Bachmann teaches each limitation of challenged claims 1, 4, 5, 14–17, and 19.

(a) Claim 1 preamble

The preamble of claim 1 recites "[a] three-dimensional (3D) pointing device subject to movements and rotations in dynamic environments." Ex. 1001, 18:54–55. Supported by testimony of Mr. Andrews, ZTE contends that Yamashita discloses 3D pointing device as recited in the preamble. Pet. 31–33 (citing Ex. 1006, 9:42–50, 12:47–13:10, 13:61–65, 14:35–48, Figs. 1, 3, 8; Ex. 1003 ¶ 112–113).

CyWee does not contest ZTE's argument, *see* PO Resp. 27, and we find it persuasive. Because we find that Yamashita discloses the preamble of claim 1, we need not determine whether the preamble is limiting.[29]

(b) Limitation 1(a)

Limitation 1(a) recites "a housing associated with said movements and rotations of the 3D pointing device in a spatial pointer reference frame."

[29] As we discuss above, both Mr. Andrews and Professor LaViola opine that at least the phrase "three dimensional (3D) pointing device" in the preamble is limiting. *See* Ex. 1003 ¶ 55; Ex. 2001 ¶ 47. However, we do not construe that term for this decision. *See supra* part IV.B.1.

Ex. 1001, 18:57–59. Supported by testimony of Mr. Andrews, ZTE contends that Yamashita discloses a housing as recited in this limitation. Pet. 33–35 (citing Ex. 1006, 9:42–10:7, Figs. 3, 4, 7; Ex. 1003 ¶ 116).

We find ZTE's argument persuasive, and CyWee does not contest that Yamashita discloses this limitation. *See* PO Resp. 27.

(c) Limitation 1(b)

Limitation 1(b) recites "a printed circuit board (PCB) enclosed by the housing." Ex. 1001, 18:60. Supported by testimony of Mr. Andrews, ZTE contends that Yamashita discloses a printed circuit board as recited in this limitation. Pet. 35–36 (citing Ex. 1006, 10:38–44, Figs. 5, 6; Ex. 1003 ¶ 117; Ex. 1002, 80 ("Examiner takes Official Notice that it was well known in the art to employ the use of a PCB to mechanically support and electrically connect electronic components using conductive pathways.")).

We find ZTE's argument persuasive, and CyWee does not contest that Yamashita discloses this limitation. *See* PO Resp. 27.

(d) Limitations 1(c)–(e)

Limitations 1(c)–(e) recite the following:

[1(c)] a six-axis motion sensor module attached to the PCB, comprising

[1(d)] a rotation sensor for detecting and generating a first signal set comprising angular velocities ω_x, ω_y, ω_z associated with said movements and rotations of the 3D pointing device in the spatial pointer reference frame,

[1(e)] an accelerometer for detecting and generating a second signal set comprising axial accelerations Ax, Ay, Az associated with said movements and

> rotations of the 3D pointing device in the spatial pointer reference frame . . . .

Ex. 1001, 18:61–19:3 (ZTE's reference numbers and line formatting added). ZTE contends that Yamashita discloses limitation 1(c), and a combination of Yamashita and Bachmann teaches limitations 1(d) and 1(e). Pet. 36–40.

In particular, with respect to limitation 1(c), ZTE argues that Figures 5–7 of Yamashita "show that the acceleration sensor 37 is attached to the substrate, which is the PCB, and gyrosensors 55 and 56 reside in the gyrosensor unit 7, which can be attached to the PCB," and "once the gyrosensor unit is plugged to the controller, the gyrosensor unit is attached to the PCB directly." Pet. 36 (citing Ex. 1006, 10:36–11:32, Figs. 5–7; Ex. 1003 ¶ 120). ZTE also argues that acceleration sensor 37 detects three axes of acceleration, gyrosensors 55 and 56 detect three axes of angular velocities, "[t]hus, in total, Yamashita discloses a six-axis motion sensor." Pet. 36–37 (citing Ex. 1006, 12:47–13:10, 14:35–48, Fig. 8; Ex. 1003 ¶ 121).

CyWee argues that since limitations 1(d) and 1(e) specify that the six-axis motion sensor comprises both a rotation sensor and an accelerometer, limitation 1(c) requires that both sensors are attached to the same PCB. PO Resp. 27–28.

CyWee also contends that both references teach away from limitation 1(c). *Id.* at 28 (citing Ex. 2001 ¶¶ 95–98). According to CyWee, Yamashita teaches away from limitation 1(c) because its accelerometers and imagers are attached to the same circuit board, while the gyroscopes are located in a separate, detachable gyrosensor unit with its own microcontroller. *Id.* (citing Ex. 1006, 10:38–50, 10:54–61, 11:14–17, 14:28–34; Ex. 2001 ¶¶ 61–62).

Thus, CyWee argues that Yamashita "expressly teaches that its gyrosensors are *not* to be attached to the circuit board." *Id.*

Similarly, CyWee contends that Bachman teaches away from limitation 1(c) because it teaches that the individual components of the MARG sensor "can be integrated using a single integrated circuit board with the accelerometers mounted separately." PO Resp. 28 (citing Ex. 1007, 14:49–51). Thus, CyWee argues that Bachmann "teaches that its accelerometers should not be mounted on the circuit board." *Id.* (citing Ex. 2001 ¶ 69).

CyWee's argument is unpersuasive in light of our construction of the term "attached to the PCB" to mean "attached to one or more PCBs." *See supra* part IV.B.5. This renders CyWee's teaching-away arguments moot.

CyWee's argument would also be unpersuasive if we had adopted a narrower construction of "attached to the PCB." While CyWee contends that Yamashita and Bachmann do not disclose a six-axis motion sensor module attached to a single PCB, CyWee does not explain how the particular embodiments in either Yamashita or Bachmann would have dissuaded a person of ordinary skill in the art from combining the sensors on a single PCB rather than on separate PCBs. *See DePuy Spine, Inc. v. Medtronic Sofamor Danek, Inc.*, 567 F.3d 1314, 1327 (Fed. Cir. 2009) ("A reference does not teach away . . . if it merely expresses a general preference for an alternative invention but does not 'criticize, discredit, or otherwise discourage' investigation into the invention claimed." (quoting *In re Fulton*, 391 F.3d 1195, 1201 (Fed. Cir. 2004)).

Other than as discussed above, CyWee does not challenge ZTE's arguments regarding limitations 1(d) and 1(e). *See* PO Resp. 27. For

limitation 1(d), ZTE argues that Yamashita discloses the recited three-axis rotation sensor. Pet. 37 (citing Ex. 1006, 3:53–4:7, 4:10–25; Ex. 1003 ¶¶ 122–23). ZTE also argues that Bachmann discloses the recited rotation sensor, and that a person of ordinary skill in the art would have been motivated to use Bachmann's sensor in Yamashita's handheld game controller. *Id.* at 37–38 (citing Ex. 1007, 9:59–10:14, 10:10–14, 10:17–30, Fig. 3; Ex. 1003 ¶¶ 126–127). We find these arguments persuasive.

For limitation 1(e), ZTE argues that Yamashita discloses the recited three-axis accelerometer. PO Resp. 39 (citing Ex. 1006, 12:47–13:10, 17:52–18.2, Fig. 3). ZTE also argues that Bachmann discloses the recited accelerometer, and that a person of ordinary skill in the art would have been motivated to use Bachmann's sensor in Yamashita's handheld game controller. *Id.* at 39–40 (citing Ex. 1007, 8:12–42, 10:10–14, Fig. 3; Ex. 1003 ¶ 130). We find these arguments persuasive.

In sum, we find that ZTE has shown that Yamashita discloses limitation 1(c), and that a person of ordinary skill in the art would have been motivated to use Bachmann's rotation sensor and accelerometer in Yamashita's game controller to obtain limitations 1(d) and 1(e).

(e) <u>Limitations 1(f)–(h)</u>

Limitation 1(f) recites "a processing and transmitting module" with the characteristics set forth in the remainder of claim 1. Ex. 1001, 19:4. Of these characteristics, limitations 1(g) and 1(h) relate to the hardware of this module. *See id.* at 19:4–18. ZTE contends that Yamashita discloses each of these aspects of the processing and transmitting module. *See* Pet. 40–42.

In particular, limitation 1(g) recites "a data transmitting unit electrically connected to the six-axis motion sensor module for transmitting

said first and second signal sets thereof." Ex. 1001, 19:4–7. ZTE argues that Yamashita discloses this limitation because the game controller has a communication section (box 36 in Figure 7) that electronically connects to the sensors and transmits the signals from each sensor. Pet. 40–42 (citing Ex. 1006, 11:52–59, 12:62–13:24, 14:18–27, 14:28–15:8, Fig. 7; Ex. 1003 ¶ 132).

Limitation 1(h) recites "a computing processor for receiving and calculating said first and second signal sets from the data transmitting unit." Ex. 1001, 19:7–9. ZTE argues that Yamashita discloses this limitation because the game controller has a microcomputer (box 42 in Figure 7) that receives and processes the signals from each sensor. Pet. 42 (citing Ex. 1006, 12:62–13:60, 14:18–15:14, Fig. 7).

We find ZTE's argument as to limitations 1(f)–(h) persuasive, and CyWee does not contest that Yamashita discloses these limitations. *See* PO Resp. 27.

(f) Limitation 1(i)

Limitations 1(i)–(k) relate to functional aspects of the recited "processing and transmitting module" (limitation 1(f)). Ex. 1001, 19:4–18. In particular, limitation 1(i) recites "communicating with the six-axis motion sensor module to calculate a resulting deviation comprising resultant angles in said spatial pointer reference frame." Ex. 1001, 19:9–12. ZTE argues that Yamashita discloses this limitation because the game controller calculates orientation angles in the game controller's reference frame. Pet. 43 (citing Ex. 1006, 12:62–13:24, 14:18–15:8, Figs. 7, 8). According to ZTE, "resulting deviation" means the orientation of the pointing device. *Id.* (citing Ex. 1001, 1:58–61; Ex. 1003 ¶ 137). We find ZTE's arguments persuasive.

ZTE also argues, and we agree, that Bachmann teaches a "resulting deviation" in the form of predicted orientation quaternion $\hat{q}$ in Figure 3. *Id.* at 48 (citing Ex. 1007, Fig. 3; Ex. 1003 ¶ 153). Although $\hat{q}$ is in quaternion form, ZTE persuasively argues that it would have been within the ordinary skill in the art convert $\hat{q}$ into Euler angles representing roll, pitch, and yaw for use in Yamashita's controller, which uses Euler angles. *See* Pet. 43 (citing Ex. 1006, 14:35–48, Fig. 8); Ex. 1006, 21:65–22:20, 22:54–24:30; Ex. 1007, 7:6–31; *see also* IPR2018-01258, Paper 86, 49 (finding that it would have been obvious to calculate roll, pitch, and yaw angles from Bachmann's orientation quaternion $\hat{q}$).

Also, ZTE acknowledges that in Bachmann, the sensor measurements are taken in the spatial pointer reference frame, but then converted to the "earth" or "world" reference frame for the comparison and integration operations to obtain resulting deviation $\hat{q}$. *See* Pet. 48–49; Ex. 1003 ¶¶ 154, 156. However, ZTE contends that it would have been an obvious variation to reverse the order of the two operations, so that the comparison and integration calculations are performed first in the sensor reference frame first, and then converted to the world reference frame after obtaining $\hat{q}$. *See* Pet. 48–49 (citing Ex. 1003 ¶ 156). According to ZTE, "this change in the sequence of operations does not have any impact on the result." *Id.* (citing Ex. 1030 ¶ 156). We find this persuasive. We also credit Mr. Andrews's testimony that "the process of changing reference frames using quaternion multiplication is independent of the quantities that are to be transformed," and that performing Bachmann's operations in the spatial pointer reference frame would have been beneficial because "doing so would result in a reduction o[f] coordinate conversion steps, since the output quaternion

would not need to be subsequently rotated back to the spatial reference frame in step 35." Ex. 1030 ¶ 154; *see also id.* ¶ 43, 155–156.

Other than CyWee's general arguments about whether a person of ordinary skill in the art would have combined Yamashita with Bachmann, which we discuss above, CyWee does not contest ZTE's arguments regarding limitation 1(i). *See* PO Resp. 27; *supra* part IV.C.4. We find for the above reasons that Yamashita discloses limitation 1(i), and that in light of Yamashita's teachings, a person of ordinary skill in the art would have been motivated to modify Bachmann's filter to obtain a resulting deviation comprising resultant angles in the spatial pointer reference frame.

(g) Limitation 1(j)

Limitation 1(j) recites "by utilizing a comparison to compare the first signal set with the second signal set." Ex. 1001, 19:12–14. ZTE argues that Yamashita discloses limitation 1(j) by the algorithm in Yamashita's Figure 23 (reproduced in relevant part above). Pet. 43–44 (citing Ex. 1006, 19:1–13, Fig. 23); *see supra* part IV.C.1.

ZTE also argues that Bachmann discloses limitation 1(j), and that a person of ordinary skill in the art would have been motivated to use Bachmann's sensor and filter with Yamashita's game controller. Pet. 44–48. According to ZTE, the recited "comparison" between the first signal set and the second signal set takes place in Bachmann at the point where measured rate quaternion $\dot{q}$ is corrected using correction factor $\dot{q}_{\varepsilon}$, as illustrated in a version of Bachmann's Figure 3 annotated by Petitioner, reproduced below:

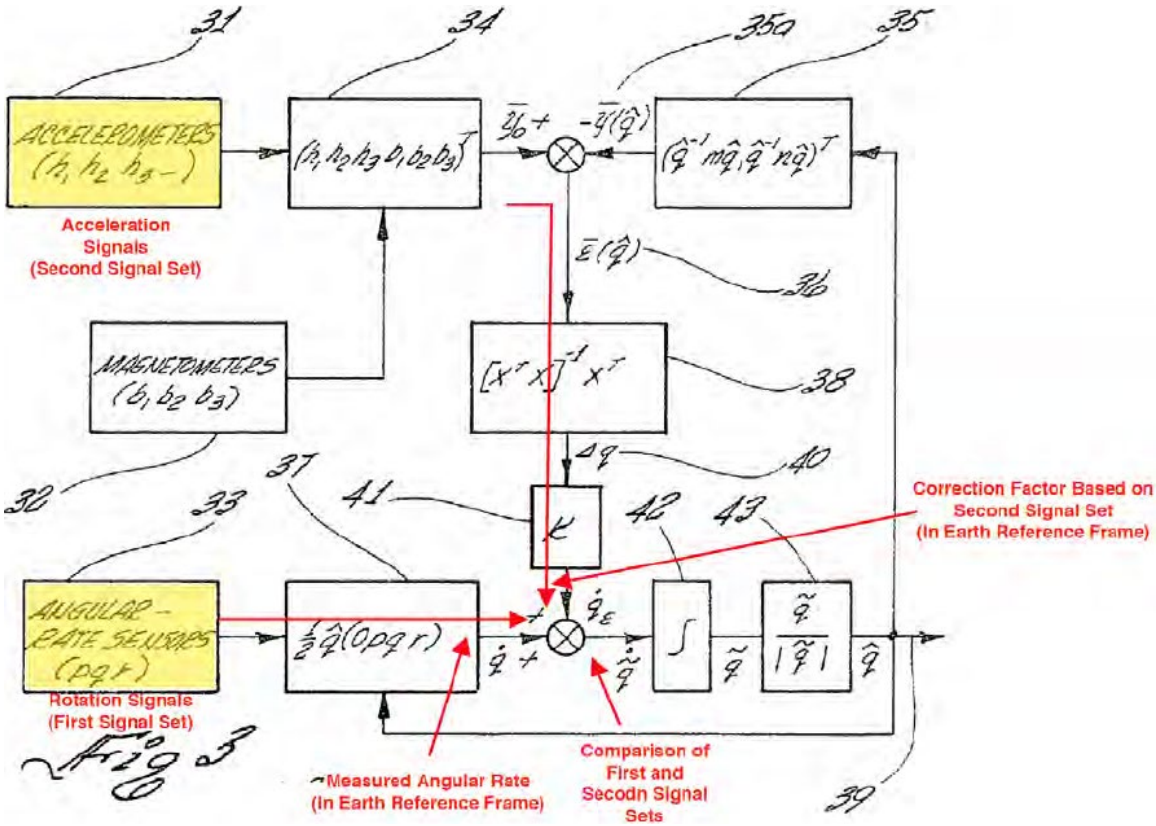

Pet. 48; Ex. 1003 ¶ 154. In annotated Figure 3, above, angular rate sensor data (p, q, r) in box 33 is labeled as the "First Signal Set," and accelerometer data (h_1, h_2, h_3) in box 31 is labeled as the "Second Signal Set." Rate quaternion $\dot{q}$ is labeled as "Measured Angular Rate (in Earth Reference Frame)," and correction factor $\dot{q}_\varepsilon$ is labeled as "Correction Factor Based on Second Signal Set (in Earth Reference Frame)." The annotated figure labels the point where $\dot{q}$ is added to $\dot{q}_\varepsilon$ as "Comparison of First and Seco[nd] Signal Sets." There are two large arrows highlighting the flow of calculation, which converge at this alleged comparison point: (1) an arrow from box 34 (containing the accelerometer data) and passing through the comparison between $\vec{y}_0$ and $\vec{y}(\hat{q})$ and boxes 38 and 41; and (2) an arrow from box 33 (the angular rate data) passing through box 37.

ZTE walks through Bachmann's filter method and shows how rate quaternion $\dot{q}$ is based on angular rate sensor data (p, q, r) (the first signal set), and how correction factor $\dot{q}_\varepsilon$ is ultimately derived from accelerometer data (h_1, h_2, h_3) (the second signal set). *See* Pet. 45–48 (citing Ex. 1007, 8:37–42, 8:63–9:48, 9:59–10:14, 17:12–22, Fig. 3; Ex. 1003 ¶¶ 141, 144–153). Thus, in sum, ZTE contends that the recited "comparison" occurs when rate quaternion $\dot{q}$, derived from the first signal set, is compared with the accelerometer data (the second signal set) via correction factor $\dot{q}_\varepsilon$. See Pet. 48 (annotated Fig. 3).

Alternatively, ZTE identifies a comparison as occurring at the top of Figure 3 at the point where measurement vector $\vec{y}_0$ is compared to computed measurement vector $\vec{y}(\hat{q})$. Pet. 47 (citing Ex. 1007, 9:9–17, 17:12–22; Ex. 1003 ¶ 149); ZTE Reply 14–15. ZTE contends that computed measurement vector $\vec{y}(\hat{q})$ is derived from the first signal set (the corrected angular velocities) and measurement vector $\vec{y}_0$ is derived from the second signal set (the measured axial accelerations); thus, ZTE argues that it meets the characteristics of the recited comparison. ZTE Reply 15–17.

This alternative argument is consistent with the Board's finding in *Google v. CyWee* that the comparison between $\vec{y}_0$ and $\vec{y}(\hat{q})$ meets the "comparison" limitation in claim 1. *See* IPR2018-01258, Paper 86, 50–53. This alternative argument is also the approach that LGE takes in its Opposition to the Revised Motion to Amend. *See* Opp. RMTA 21 (limitation 20(g)); *infra* part V.D.2(c)(3).

Given the scope of our construction of the term "comparison" in the '438 patent, we find that both of ZTE's alternative arguments are persuasive. As discussed above, we construe the term "comparison" as "the calculating

and obtaining of the actual deviation angles of the 3D pointing device . . . with respect to the first reference frame or spatial pointing frame X_P Y_P Z_P utilizing signals generated by motion sensors while reducing or eliminating noises associated with said motion sensors," which is based on an explicit definition in the '438 patent. *See supra* part IV.B.4. Both of the locations that ZTE identifies in Bachmann's Figure 3 meet this definition, except to the extent that Bachmann teaches that resulting deviation $\hat{q}$ (39) is calculated in the "world" or "earth" reference frame. But as we discuss above in the context of limitation 1(i), we find that a person of ordinary skill in the art would have had reason, in light of Yamashita, to perform Bachmann's calculations in the spatial pointer reference frame. *See supra* part IV.C.5(f).

Further, ZTE has persuasively shown, in both of its arguments, that the comparison is with respect to the first signal set (the angular velocities) and the second signal set (the axial accelerations) as recited in limitation 1(j), and that the comparison "utilize[es] signals generated by motion sensors while reducing or eliminating noises associated with said motion sensors," according to our construction. In ZTE's first argument, the comparison does so by using correction factor $\dot{q}_\varepsilon$, based in part on the accelerometer data (second signal set), to update rate quaternion $\dot{q}$ and correct for noise associated with angular rate sensor data (p, q, r) (the first signal set). *See* Ex. 1007, 9:55–58, 10:36–45, Fig. 3. In ZTE's second argument, the comparison does this by directly comparing measurement vector $\vec{y}_0$ (comprising data from the second signal set) with computed measurement vector $\vec{y}(\hat{q})$ (derived from the first signal set) to ultimately calculate correction factor $\dot{q}_\varepsilon$. *See* Pet. 47 (citing Ex. 1007, 9:9–17, 17:12–22; Ex. 1003 ¶ 149); ZTE Reply 14–17.

Other than CyWee's arguments about whether a person of ordinary skill in the art would have combined Yamashita with Bachmann, which we discuss above, CyWee does not contest ZTE's arguments regarding limitation 1(j). *See* PO Resp. 27; *supra* part IV.C.4. We find that the combination of Yamashita and Bachmann teaches limitation 1(j), and that a person of ordinary skill in the art would have had reason to combine the two references to obtain limitation 1(j).

(h) Limitation 1(k)

Limitation 1(k) recites "said resultant angles in the spatial pointer reference frame of the resulting deviation of the six-axis motion sensor module of the 3D pointing device are obtained under said dynamic environments." Ex. 1001, 19:15–18. ZTE argues that both Yamashita and Bachmann disclose this limitation. Pet. 48–49 (citing Ex. 1003 ¶ 156).

Other than CyWee's arguments about whether a person of ordinary skill in the art would have combined Yamashita with Bachmann, which we discuss above, CyWee does not contest ZTE's arguments regarding these limitations. *See* PO Resp. 27; *supra* part IV.C.4.

We find that ZTE has shown that the combination of Yamashita and Bachmann discloses limitation 1(k), for the reasons given above with respect to limitations 1(i) and 1(j).

(i) Limitation 1(l)

Limitation 1(l) recites "wherein the comparison utilized by the processing and transmitting module further comprises . . . ." Ex. 1001, 19:18–20. This limitation is a prelude to both limitations 1(m) and 1(n), and ZTE relies on its arguments for those limitations. *See* Pet. 73. CyWee agrees

that ZTE's arguments for 1(l) depend on its arguments for 1(m)–(n). PO Resp. 29. For the reasons below, we find that the Yamashita–Bachmann combination teaches limitations 1(m) and 1(n), and thus 1(l).

(j) Limitation 1(m)

Limitation 1(m) recites "an update program to obtain an updated state based on a previous state associated with said first signal set and a measured state associated with said second signal set." Ex. 1001, 19:20–23. ZTE contends that Yamashita meets this limitation by disclosing that "the updated posture, which is the updated state, is based on the angular velocity, the first signal set, and corrected by acceleration data, the second signal set." Pet. 49 (citing Ex. 1006, 19:8–13, 19:29–40; Ex. 1003 ¶ 158).

CyWee disagrees, arguing that "*Yamashita* at most discloses using angular velocity and acceleration data taken at the *current time*, . . . and makes no mention of obtaining the updated posture based on a previous state associated with the angular velocities *at a previous time*." PO Resp. 30 (citing Ex. 1006, 19:29–40). We find CyWee's argument persuasive, because ZTE has not shown that Yamashita's sensor fusion method includes a feedback loop that updates the state based on the previously calculated state.

Alternatively, ZTE relies on Bachmann for teaching limitation 1(m). *See* Pet. 50–51; ZTE Reply 15–20. In particular, ZTE points to equation 16 of Bachmann,

$$\hat{q}_{n+1} = \hat{q}_n + \frac{1}{2}\hat{q}^B \omega \Delta t + \alpha [X^T X]^{-1} X^T \varepsilon(\hat{q}_n)$$
$$\hat{q}_n + k\Delta t \Delta q_{full} + \dot{q}_{measured}\Delta \mathrm{t}$$

which, according to ZTE, "clearly shows that the next discrete value of q [the updated state] is determined by the least squares filtered difference

'Δq_{full}' times the time interval between the samples plus the measured angular rate time[s] the time interval." Pet. 50–51 (citing Ex. 1003 ¶ 161); *see also* Ex. 1030 ¶¶ 88–94 (Mr. Andrews explaining his testimony in more detail in support of ZTE's Reply). In other words, according to Mr. Andrews, equation 16

> clearly shows that the next discrete value of $\hat{q}$, $\hat{q}_{n+1}$ is determined by previous state $\hat{q}_n$, the measured angular velocity (first signal set) quaternion integrated over time Δt, $\frac{1}{2}\hat{q}^B \omega \Delta t$, and an error term $\varepsilon(\hat{q}_n)$ that is derived by the difference between the quaternion formed by the measured acceleration (second signal set) and magnetic orientation, and the prior orientation quaternion rotated from the sensor frame to the world frame, which is $\bar{y}(\hat{q})$.

Ex. 1030 ¶ 89.

In response to ZTE's alternative argument, CyWee argues that "the only discussion of actual measurements and the computed measurement in *Bachmann* is with respect to the 6×1 measurement vector, and this measurement vector involves two unit vector quaternions combining both the magnetometer and the accelerometer measurements." PO Resp. 30–31 (citing Ex. 2007, 8:53–50, 9:13; Ex. 2016, 173:2–6). According to CyWee, Bachmann's equation 16 does not support ZTE's position because "the process claimed by the '438 Patent and by which the '438 Patent obtains its updated state is very different from that *actually* disclosed by *Bachmann*," which uses Gauss-Newton iteration for filter processing rather than elements of an extended Kalman filter. *Id.* at 31–32 (citing Ex. 1001, 13:51–14:22; Ex. 1007, 9:20–37, Fig. 3; Ex. 1014, 94, 101; Ex. 2015 ¶ 14). Thus, CyWee argues that Bachmann is not enabling. *Id.* at 32 (citing *Impax Labs, Inc. v. Aventis Pharms. Inc.*, 468 F.3d 1366, 1381 (Fed. Cir. 2006); Ex. 2015 ¶ 14).

We find ZTE's alternative argument regarding limitation 1(m) persuasive. Bachmann's Equation 16 indicates that $\hat{q}_{n+1}$ (the updated state quaternion at time $n+1$), is based on $\hat{q}_n$ (the previous state quaternion at time n) in two ways, via the terms $\hat{q}_n$ and $\alpha[X^T X]^{-1} X^T \varepsilon(\hat{q}_n)$. Previous state $\hat{q}_n$ is associated (in the iteration of equation 16 for the previous time step) with the first signal set via the term $\frac{1}{2}\hat{q}^B \omega \Delta t$ or $\dot{q}_{measured}\Delta$t, which derives from angular rate data (p, q, r). *See* Ex. 1030 ¶ 90; *see also* ZTE Reply 19 (showing this relationship in graphical form as an annotated version of Bachmann's Figure 3). As limitation 1(m) also requires, updated state $\hat{q}_{n+1}$ is based on a measured state associated with the second signal set via term $\alpha[X^T X]^{-1} X^T \varepsilon(\hat{q}_n)$ or $k\Delta t \Delta q_{full}$, for the reasons discussed below under limitation 1(n). *See infra* part IV.C.5(k).

We do not find persuasive CyWee's argument that Bachmann lacks enablement as to limitation 1(m). First, while an anticipatory reference must be enabling, in the context of determining obviousness under § 103 we consider the prior art teachings as a whole, including subject matter that is allegedly inoperative or non-enabling. *Symbol Techs. Inc. v. Opticon Inc.*, 935 F.2d 1569, 1578 (Fed. Cir. 1991) (explaining that "a non-enabling reference may qualify as prior art for the purpose of determining obviousness"). Second, we are not persuaded by CyWee's suggestion that using elements of an extended Kalman filter would have been outside the level of ordinary skill in the art at the time of the claimed invention, because none of the challenged claims require using elements of an extended Kalman filter. *See In re Hiniker Co.*, 150 F.3d 1362, 1368–69 (Fed. Cir. 1998) (holding that characteristics found in the written description, but not in the claims, are not considered in an obviousness analysis).

Thus, having considered the arguments on both sides, we find that the Yamashita–Bachmann combination teaches limitation 1(m).

(k) Limitation 1(n)

Limitation 1(n) recites "wherein the measured state includes a measurement of said second signal set and a predicted measurement obtained based on the first signal set without using any derivatives of the first signal set." Ex. 1001, 19:23–26. ZTE contends that Yamashita discloses this limitation for the same reasons Yamashita discloses limitation 1(m). Pet. 51. As we discuss above, we find this argument unpersuasive. *See supra* part IV.C.5(j). In addition, as CyWee notes, Mr. Andrews conceded in his deposition that his opinion relies on Bachmann, not Yamashita, to teach a "predicted measurement" according to limitation 1(n). *See* PO Resp. 33 (citing Ex. 2016, 112:15–114:3).[30]

Alternatively, ZTE relies on Bachmann for teaching limitation 1(n). *See* Pet. 52–53; ZTE Reply 20–23. According to ZTE, the least-squares-filtered difference Δq_{full} in equation 16 "is determined . . . by comparing the

[30] CyWee argues that because Yamashita uses "angular accelerations," which are "derivatives of the first signal set," Yamashita "teaches away from a comparison method and update program that operates 'without using any derivatives of the first signal set.'" PO Resp. 33 (citing Ex. 1004, 21:28–30, 22:31–39, Figs. 23, 25). Although we do not rely on Yamashita for teaching limitation 1(n), we disagree that Yamashita's use of such derivatives constitutes a teaching away. CyWee has not explained why the use of derivatives in Yamashita's algorithm would have dissuaded a person of ordinary skill in the art from using a *different* algorithm without such derivatives.

output state $\hat{q}$ (in . . . the earth reference frame), that is, $[\bar{y}(\hat{q})]$,[31] against the measured state based on the accelerometers and the magnetometers, that is, y_0," to generate the error between the two values *Id.* at 52. ZTE contends that the entire computation for generating the error correction term from y_0 and $\bar{y}(\hat{q})$ "is in angular space, not in rate space. Thus, this predicted orientation is determined without using any derivatives." Pet. 53 (citing Ex. 1003 ¶ 167).

CyWee argues that Bachmann fails to "teach 'a predicted measurement' of the axial acceleration using information from the first signal set at time T." PO Resp. 33. According to CyWee, Mr. Andrews does not identify "which teachings from *Bachmann* disclose 'a predicted measurement," other than arguably the predicted value of q, "and, at best, that corresponds to an updated orientation, q, not a predicted axial acceleration, as required by Claim 1." *Id.* (citing Ex. 1003 ¶¶ 163–167).

We agree with CyWee that ZTE was unclear in its Petition which variable is the predicted measurement. Although ZTE mentions the calculation of $\bar{y}(\hat{q})$, ZTE seems to suggest that the recited "predicted measurement" is the updated $\hat{q}_{n+1}$ in Bachmann's equation 16. However, ZTE clarified this ambiguity in its Reply, stating that "$\bar{y}(\hat{q})$ (in . . . box 35a)

---

[31] In the Petition, the passage quoted here reads "$y_0(\hat{q})$" in arguments directed to limitations 1(m) and 1(n). Pet. 51–52. CyWee argues that ZTE is "creating its own evidence to support its position" because $y_0(\hat{q})$ "does not appear in the entire *Bachmann* reference." PO Resp. 31 (as to limitation 1(m)); *see also id.* at 34 (reiterating the argument as to limitation 1(n)). Given the context, it is clear that ZTE was referring to $\bar{y}(\hat{q})$ as shown in Figure 3. *See* Ex. 1030 ¶ 87 (Mr. Andrews acknowledging that there is no $y_0(\hat{q})$ in Bachmann, but that in light of the context of his discussion of Bachmann's Figure 3, "it is clear that this quantity should be $\bar{y}(\hat{q})$").

is the predicted axial acceleration and magnetic orientation quaternion based on the first signal set." ZTE Reply 22. Mr. Andrews further opined that a person of ordinary skill in the art "would have understood that subtraction of any two quantities requires that the quantities be of the same type," so "error term $\varepsilon(\hat{q}_n) = \bar{y}_0 - \bar{y}(\hat{q})$ must include both axial accelerations and magnetic orientations." Ex. 1030 ¶ 97. Thus, in his opinion, "$\bar{y}_0$ represents the current measured values for these quantities, and $\bar{y}(\hat{q})$ represents the same quantities derived from the prior predicted state." *Id.*

In its Sur-reply, CyWee disagrees that $\bar{y}(\hat{q})$ is the "predicted measurement" for two reasons. First, CyWee contends that Bachmann "does not describe $\bar{y}(\hat{q})$ as predicted measurements; it does not provide any description at all." PO Sur-reply 12 (citing Ex. 1007).

We do not find this argument persuasive. Bachmann describes $\bar{y}(\hat{q})$ (or the synonymous symbol $\vec{y}(\hat{q})$[32]) as a "computed measurement vector." Ex. 1007, 9:2, 9:10. Bachmann also states that $\vec{y}_0$ (synonymous with $\bar{y}_0$) "is considered a vector of data points and $\vec{y}(\hat{q})$ is a vector to be fitted to those points" based on linearized least square regression analysis. *Id.* at 9:32–35. We see no substantive difference between a "predicted measurement" and a vector described as a "computed measurement" that is fitted by regression to a set of actual measurements.

Second, CyWee argues that ZTE "identified the output of Box 34 as 'the measured state associated with said second signal set of axial

[32] *See* Ex. 1051 ¶ 64 n.9 (Professor Michalson explaining that $\bar{y}(\hat{q})$ and $\vec{y}(\hat{q})$ are interchangeable).

accelerations' but $\vec{y}(\hat{q})$ (the quantity alleged by Petitioner to be the claimed 'predicted measurement') is not part of Box 34." PO Sur-reply 12.

We do not find this argument persuasive. Read fairly, ZTE's argument in the Reply, and Mr. Andrews's supporting testimony, are that $\bar{y}_0$ is the recited "measurement of said second signal set," that $\bar{y}(\hat{q})$ is the recited "predicted measurement obtained based on the first signal set without using any derivatives of the first signal set," and that $\bar{y}_0$ and $\bar{y}(\hat{q})$, together, comprise the "measured state associated with said second signal set."

Based on all the evidence of record, we find that ZTE has shown that Bachmann teaches limitation 1(n). In particular, ZTE has shown that $\bar{y}_0$ and $\bar{y}(\hat{q})$ correspond to the "measured state." There is nothing in claim 1 that requires the "measured state" to consist of a single variable, and in the '438 patent itself, measurement Ax, Ay, Az and predicted measurement Ax′, Ay′, Az′ are, likewise, distinct entities. *See* Ex. 1001, 12:61–13, 13:31–37; Ex. 1048, 156:17–167:15 (Professor LaViola explaining how the '438 patent supports the "measurement" and "predicted measurement" limitations). Like calculated measurements $\bar{y}(\hat{q})$ in Bachmann, predicted measurements Ax′, Ay′, Az′ are "obtained based on or calculated from the first signal set." Ex. 1001, 8:52–56. We also agree with ZTE that Bachmann's $\bar{y}(\hat{q})$ is calculated without using any derivatives of the first signal set.[33]

For all the above reasons, we find that the Yamashita–Bachmann combination teaches all the limitations of claim 1, and that a person of ordinary skill in the art would have been motivated to combine the teachings

[33] We also address some of the above issues below, in the context of CyWee's Revised Motion to Amend. *See infra* part V.D.2(c)(4).

of the references as recited in claim 1. Therefore, we conclude that claim 1 is unpatentable under § 103 as obvious over Yamashita in light of Bachmann.

(l) Claim 4

Claim 4 depends from claim 1 and recites "wherein the spatial pointer reference frame is a reference frame in three dimensions; and wherein said resultant angles of the resulting deviation includes yaw, pitch and roll angles about each of three orthogonal coordinate axes of the spatial pointer reference frame." Ex. 1001, 19:37–42.

ZTE argues that Yamashita discloses the new limitations of claim 4 by disclosing that the pointing device "is capable of detecting movements and rotations in a three-dimensional coordinate system" and that "the resultant angles would be yaw, pitch and roll angles." Pet. 53 (citing Pet. 36–37, 43, 48–49; Ex. 1006, 12:62–13:10).

ZTE also argues that Bachmann discloses the new limitations because it discloses a "body coordinate system" with three orthogonal axes. Pet. 54 (citing Ex. 1007, 5:49–6:10; Ex. 1003 ¶ 169).

CyWee does not contest ZTE's arguments regarding claim 4, other than to argue in general that ZTE has failed to show that the Yamashita–Bachmann combination discloses all the elements of parent claim 1 and "discloses all elements of any claims depending from Claim 1." PO Resp. 34.

We find ZTE's arguments persuasive. Thus, we conclude that claim 4 is unpatentable under § 103 as obvious over Yamashita in light of Bachmann.

(m) Claim 5

Claim 5 depends from claim 1 and recites "wherein the data transmitting unit of the processing and transmitting module is attached to the PCB enclosed by the housing and transmits said first and second signal of the six-axis motion sensor module to the computing processor via electronic connections on the PCB." Ex. 1001, 19:43–48.

ZTE argues that Yamashita discloses this limitation because, on the PCB inside the housing, "[t]he data transmitting unit is between the sensors and the processor, and must be electrically connected." Pet. 55 (citing Ex. 1006, Figs. 3, 4, 7; Ex. 1003 ¶ 172). ZTE also argues that "[i]t would have been obvious to attach the transmitting unit to the PCB and use the traces," because when electronic systems contain components that communicate with each other, "[t]hose electrical signals must travel through some medium," which is often "an electrical connection, such as a wire." *Id.* (citing Ex. 1003 ¶ 172).

CyWee does not contest ZTE's arguments regarding claim 5, other than to argue in general that ZTE has failed to show that the Yamashita–Bachmann combination discloses all the elements of parent claim 1 and "discloses all elements of any claims depending from Claim 1." PO Resp. 34.

We find ZTE's arguments persuasive. Thus, we conclude that claim 5 is unpatentable under § 103 as obvious over Yamashita in light of Bachmann.

(n) Claims 14 and 19

We discuss claims 14 and 19 together because they are essentially identical. *Compare* Ex. 1001, 21:8–45, *with id.* at 22:17–54. The claims are similar to claim 1, except that they recite a method, rather than a device, but the method in claims 14 and 19 is essentially the same as the functional limitations of claim 1. *Compare* Ex. 1001, 21:8–45, *and id.* at 22:17–54, *with id.* at 18:54–19:26.

In challenging claims 14 and 19, ZTE relies largely on its analysis of claim 1, which we have addressed above. *See* Pet. 61–58. In response, CyWee contends that ZTE's analysis is "wholly insufficient," for four reasons that we discuss below. PO Resp. 35.

First, CyWee argues that ZTE "has not identified which quaternions in the combination of *Yamashita* and *Bachmann* are the 'second quaternion' recited by claims 14/19." PO Resp. 35.

We agree with CyWee that ZTE did not specify which quaternion was the "second quaternion" in its Petition. However, ZTE's Reply clarifies that in Bachmann's Figure 3, the angular velocities are converted to rate quaternion $\dot{q}$, which is then corrected by correction factor $\dot{q}_\varepsilon$ to obtain corrected rate quaternion $\dot{\tilde{q}}$. ZTE Reply 24 (citing Ex. 1030 ¶ 102). Thus, we understand ZTE to be arguing that rate quaternion $\dot{q}$ is the "second quaternion" representing the "current state." CyWee does not contest ZTE's arguments in its Sur-reply. *See* PO Sur-reply 15–19; Ex. 2015 ¶¶ 17–19.

We find ZTE's explanation in its Reply to be persuasive. According to claims 14 and 19, the "second quaternion" is "said current state of the six-axis motion sensor module . . . with respect to said current time T." Ex. 1001, 21:31–33, 22:40–42. The "current state," in turn, is obtained "by

obtaining measured angular velocities ω_x, ω_y, ω_z gained from the motion sensor signals of the six-axis motion sensor module at a current time T." *Id.* at 21:19–22, 22:28–31. Bachmann discloses that rate quaternion $\dot{q}$ represents the angular velocities measured in the sensor module at the current time. *See* Ex. 1007, 9:59–60, 10:17–45, 11:17–20, Fig. 3. Rate quaternion $\dot{q}$ is then compared with the measured and a predicted axial accelerations ($\bar{y}_0$ and $\bar{y}(\hat{q})$, respectively) at the current time, through correction factor $\dot{q}_\varepsilon$. Thus, we agree with ZTE that rate quaternion $\dot{q}$ corresponds to the "second quaternion" recited in claims 14 and 19.

Second, CyWee challenges ZTE's argument that the Yamashita–Bachmann combination teaches "a three-dimensional (3D) pointing device utilizing a six-axis motion sensor module therein" as recited in the preambles of claims 14 and 19. PO Resp. 36 (citing Ex. 2001 ¶¶ 102–105). According to CyWee, Yamashita's gyroscopes are in a detachable gyrosensor unit with its own microcontroller, which teaches away from providing both a rotational sensor and an accelerometer in the same pointing device. *Id.* at 36–37 (citing Ex. 1006, 10:38–50, 54–61, 11:14–17, 14:28–34; Ex. 2001 ¶¶ 61–62, 103). CyWee also argues that Bachmann does not disclose a 3D pointing device at all, and that the individual components of Bachmann's MARG sensor "can be integrated using a single integrated circuit board with the accelerometers mounted separately," so Bachmann does not teach providing a 3D pointing device utilizing a six-axis motion sensor module therein. *Id.* at 37 (quoting Ex. 1007, 14:49–51) (citing Ex. 2001 ¶¶ 64–69).

We address CyWee's arguments above, in the context of limitations 1(c)–(d), and find them unpersuasive. *See supra* part IV.C.5(d).

Third, CyWee challenges ZTE's argument that the Yamashita–Bachmann combination teaches limitations 14(c) or 19(c). This limitation recites

> obtaining a measured state of the six-axis motion sensor module by obtaining measured axial accelerations Ax, Ay, Az gained from the motion sensor signals of the six-axis motion sensor module at the current time T and calculating predicted axial accelerations Ax′, Ay′, Az′ based on the measured angular velocities ω_x, ω_y, ω_z of the current state of the six-axis motion sensor module without using any derivatives of the measured angular velocities ω_x, ω_y, ω_z.

Ex. 1001, 21:23–31, 22:32–40. CyWee reiterates its arguments with respect to limitation 1(n), which we address above and find unpersuasive because Bachmann teaches a measured state that includes measured axial accelerations $\bar{y}_0$ (box 34 in Figure 3) and predicted axial accelerations $\bar{y}(\hat{q})$ (box 35a in Figure 3). *See supra* part IV.C.5(k).

Finally, CyWee challenges ZTE's argument that the Yamashita–Bachmann combination teaches limitation 14(f) or 19(f). This limitation recites "obtaining an updated state of the six-axis motion sensor module by comparing the current state with the measured state of the six-axis motion sensor module." Ex. 1001, 21:39–41, 22:48–50. CyWee alleges that "[t]he '438 Patent claims an update program that utilizes elements of an Extended Kalman Filter estimator (EKF)." PO Resp. 40–41 (citing Ex. 1001, 13:51–14:22; Ex. 2015 ¶ 14). According to CyWee, "[i]t would be readily apparent to a [person of ordinary skill in the art] that an iterative process such as the Gauss-Newton minimization that *Bachmann* discloses is fundamentally different from a process that utilizes elements of an EKF." *Id.* at 41.

CyWee also made this argument with respect to limitation 1(m), and we likewise find the argument unpersuasive as to claims 14 and 19. *See supra* part IV.C.5(j). Like claim 1, claims 14 and 19 do not include any limitation requiring the use of an extended Kalman filter.

For all the above reasons, including our analysis above with respect to similar claim 1, we find that a person of ordinary skill in the art would have been motivated to combine the teachings of the references to obtain a method as recited in claims 14 and 19, including all their limitations. Therefore, we conclude that claims 14 and 19 are unpatentable under § 103 as obvious over Yamashita in light of Bachmann.

(o) Claim 15

Claim 15 depends from claim 14 and "further comprises the step of outputting the updated state of the six-axis motion sensor module to the previous state of the six-axis motion sensor module." Ex. 1001, 21:48–50.

In the Petition, ZTE relies on its arguments for limitations 1(j) and 1(m). Pet. 58. ZTE's argument for limitation 1(m) contends that in Bachmann, each successive "updated state" is calculated in part from the "previous state" (the updated state from the previous time interval) according to Equation 16. Pet. 50–51.

Claim 15 also includes a limitation that "said resultant angles of the resulting deviation include[] yaw, pitch and roll angles about each of three orthogonal coordinate axes of the spatial pointer reference frame." Ex. 1001, 21:50–53. ZTE argues that "Yamashita disclose[s] the use of yaw, pitch, and roll angles," as ZTE argued with respect to limitation 1(i). Pet. 58 (citing Pet. 48).

CyWee does not contest ZTE's arguments regarding claim 15, other than to argue in general that ZTE has failed to show that the Yamashita–Bachmann combination discloses all the elements of parent claim 14 and "discloses all elements of any claims depending from Claim 14." PO Resp. 41–42.

We find ZTE's arguments persuasive, so we conclude that claim 15 is unpatentable under § 103 as obvious over Yamashita in light of Bachmann.

(p) Claim 16

Claim 16 depends from claim 14 and recites "wherein said previous state of the six-axis motion sensor module is a first quaternion with respect to said previous time $T - 1$; and said updated state of the six-axis motion sensor module is a third quaternion with respect to said current time T." Ex. 1001, 21:54–22:4. In the Petition, ZTE relies on its arguments as to limitations 1(i), 1(j), and 1(m). Pet. 59.

In response, CyWee argues that ZTE "has not identified which quaternions in the combination of *Yamashita* and *Bachmann* are the . . . 'first quaternion' or 'third quaternion' recited by claim 16." PO Resp. 35.

In its Reply, ZTE argues that the "first quaternion," representing the "previous state," is the output $\hat{q}$ at the previous time step, which is then used to form a correction factor at the next time step to calculate the "third quaternion," representing the "updated state" at the current time step. *See* ZTE Reply 24.

CyWee does not contest ZTE's assertion in its Sur-reply. *See* PO Sur-reply 15–19; Ex. 2015 ¶¶ 17–19. We find ZTE's arguments persuasive, and therefore conclude that claim 16 is unpatentable under § 103 as obvious over Yamashita in light of Bachmann.

(q) Claim 17

Claim 17 depends from claim 14, and recites "wherein the obtaining of said previous state of the six-axis motion sensor module further comprises initializing said initial-value set." Ex. 1001, 22:6–8. ZTE relies on its arguments for limitations 1(m)–(n), and also argues that Yamashita discloses an "initial-value set." Pet. 59–60 (citing Ex. 1006, 22:59–23:26, Fig. 26).

CyWee does not contest ZTE's assertion in its Sur-reply. *See* PO Sur-reply 15–19; Ex. 2015 ¶¶ 17–19. We find ZTE's arguments persuasive, and therefore conclude that claim 17 is unpatentable under § 103 as obvious over Yamashita in light of Bachmann.

6. Conclusion

Based on the evidence and arguments of record, we determine that ZTE has shown, by a preponderance of the evidence, that claims 1, 4, 5, 14–17, or 19 of the '438 patent would have been obvious over Yamashita in view of Bachmann, and are thus unpatentable.

D. GROUND BASED ON NASIRI AND SONG

ZTE's second ground in the Petition is that claims 1, 4, 5, 14–17, and 19 of the '438 patent would have been obvious over Nasiri (which incorporates Sachs by reference) in view of Song. Pet. 6. We find that ZTE has not shown that the challenged claims are unpatentable on this ground, for the reasons discussed below.

1. Overview of Nasiri, Sachs, and Song

Nasiri discloses "systems and methods capable of facilitating interaction with handheld electronic[] devices based on sensing rotational

rate around at least three axes and linear acceleration along at least three axes." Ex. 1008, code (57). It incorporates Sachs by reference in its entirety, including its "algorithm combining inputs from multiple sensors to provide more robust sensing." *Id.*, 14:53–57.

The algorithm that Nasiri incorporates from Sachs "combin[es] gyroscope and accelerometer data to produce a model of the orientation of the device using world coordinates." Ex. 1009 ¶ 68. It uses quaternions to represent orientation, and updates the quaternions using corrections derived ultimately from raw accelerometer and gyroscope data. *See id.* ¶¶ 69–74.

Song discloses "a method and apparatus for recognizing space according to the movement of an input device . . . using an angular velocity sensor and an accelerometer." Ex. 1010 ¶ 3. Part of the relevant apparatus includes a transmitter that wirelessly transmits position information from an input device (such as a mouse or remote control) to a receiver. *Id.* ¶ 3.

2. *Alleged Obviousness Rationale Based on Nasiri and Song*

ZTE alleges that a person of ordinary skill in the art would have had reason to combine Nasiri's sensor module and application processor with Song's wireless interface, in order to "physically separate the sensor module from the application processor in order to reduce the size[,] weight and power consumption of the handheld unit." Pet. 31.

CyWee does not specifically challenge ZTE's rationale for combining Nasiri with Song, and we find that rationale persuasive.

3. *Comparison of the Challenged Claims with Nasiri, Sachs, and Song.*

The Petition includes a limitation-by-limitation analysis purportedly comparing the challenged claims with Nasiri, Sachs, and Song. Pet. 31–60. However, we find that ZTE has not met its burden to identify, "with particularity, . . . the grounds on which the challenge to each claim is based, and the evidence that supports the grounds for the challenge to each claim." 35 U.S.C. § 322(a)(3); *see also* 37 C.F.R. §§ 42.22(a)(2), 42.204(b)(4); *Magnum Oil Tools*, 829 F.3d at 1380 (A petition must "articulate specific reasoning, based on evidence of record, to support the legal conclusion of obviousness." (citing *KSR*, 550 U.S. at 418)).

With regard to claims 1, 4, and 5, CyWee only disputes ZTE's argument that Nasiri (including by incorporation Sachs) discloses limitations 1(l)–(n) of claim 1. *See* PO Resp. 49–54.

Limitations 1(l) and 1(m), taken together, recite "wherein the comparison utilized by the processing and transmitting module further comprises an update program to obtain an updated state based on a previous state associated with said first signal set and a measured state associated with said second signal set." Ex. 1001, 19:18–23. According to ZTE, Sachs discloses an update program that updates quaternion q', representing the orientation of a device, according to the following equation:

$$q' = \text{normalize}(q + q_{accelerometer} + q_{gyroscope})$$

where q is the current quaternion (i.e., the current state), $q_{accelerometer}$ is a quaternion update term based on the current quaternion and measured accelerometer data, and $q_{gyroscope} = 0.5qw(dt)$ is another update term in

which q is the current quaternion, w is the raw gyroscope data, and dt is the sample time of the sensor data. Pet. 76–78 (citing Ex. 1009 ¶¶ 69–73).

According to ZTE, Sachs "disclose[s that] the updated state is based on a previous state associated with said first signal set (angular velocities), $q_{gyroscope}$." Pet. 76. Although ZTE does not explicitly say why $q_{gyroscope}$, is associated with a *previous* state associated with angular velocities, we note that the formula for $q_{gyroscope}$ depends on current quaternion q, which was calculated using gyroscope data in the previous iteration. ZTE also appears to identify $q_{accelerometer}$ as the "measured state associated with said second signal set." *See* Pet. 77–78 (citing Ex. 1009 ¶ 69–71).

CyWee contends that Sachs does not disclose limitation 1(m) because the cited passages in Sachs "do not make use of any part of the enhanced comparison method claimed by the '438 Patent," and in particular, "*Sachs* does not make use of anything remotely similar to the enhanced comparison method described in equations 5–11." PO Resp. 52 (citing Ex. 2001 ¶ 114–115). We do not find this argument persuasive, because limitation 1(m) does not require the use of equations 5–11 found in the '438 patent specification. *See Hiniker*, 150 F.3d at 1368–69 (characteristics found in the written description, but not in the claims, are not considered in an obviousness analysis).

Limitation 1(n) recites "wherein the measured state includes a measurement of said second signal set and a predicted measurement obtained based on the first signal set without using any derivatives of the first signal set." Ex. 1001, 19:23–26.

ZTE argues that the measured state in Sachs includes a "measurement of said second signal set" because Sachs "discloses accelerometers [and]

generates acceleration data as part of the augmented data for [the] device." Pet. 78 (citing Ex. 1009 ¶ 62, Fig. 7). Thus, ZTE identifies the recited "measurement" as the processed accelerometer data. ZTE also argues that Sachs discloses a "predicted measurement obtained based on the first signal set without using any derivatives of the first signal set" because "[w]hen the processing is done in a discrete time system, the time increment is known and fixed," and the device "computes the changes directly using only delta rotations, not rotation rates." Pet. 79 (citing Ex. 1003 ¶ 233).

However, ZTE does not specifically identify the "predicted measurement" in Sachs, explain why it is a prediction, or explain why the recited "measured state" (which ZTE appears to identify as $q_{accelerometer}$ in limitation 1(m)) includes both a measurement and a prediction. Thus, we find that ZTE's analysis of limitation 1(n) is insufficiently specific to show, by a preponderance of the evidence, that claim 1 would have been obvious over Nasiri and Sachs in view of Song. ZTE's analysis for dependent claims 4 and 5, which focuses only on the added limitations of those claims, does not cure this deficiency. *See* Pet. 80–83.

ZTE's limitation-by-limitation analysis of claims 14–17 and 19 is likewise insufficiently specific, because ZTE's analysis for each limitation simply refers back to its analysis for claim 1. *See* Pet. 83–88. ZTE also does not identify the features of these claims that are not specifically present in claim 1. For example, ZTE's analysis does not identify which quaternion disclosed in Sachs is the "second quaternion" recited in claims 14 and 19, or the "first quaternion" or "third quaternion" recited in claim 16. Ex. 1001, 21:32, 22:1, 3, 41.

4. Conclusion

Based on the evidence and arguments of record, ZTE has not shown, by a preponderance of the evidence, that claims 1, 4, 5, 14–17, or 19 of the ’438 patent are unpatentable as obvious over Nasiri in view of Song.

V. CYWEE’S REVISED MOTION TO AMEND

Because we conclude that all of the challenged claims are unpatentable based on ground 1 of the Petition, we consider CyWee’s Revised Motion to Amend. *See* RMTA (Paper 38) 1 (stating that the Revised Motion to Amend is “contingent upon a finding that the original challenged claims of [the ’438 patent] are invalid”). For the reasons below, we find that proposed substitute claims 21 and 24 introduce new subject matter and we conclude that all the proposed substitute claims are unpatentable under § 103. Therefore, we deny the Revised Motion to Amend.

A. PROPOSED SUBSTITUTE CLAIMS

CyWee proposes claim 20 as a substitute for claim 1, claim 21 as a substitute for claim 5, claim 22 as a substitute for claim 14, claim 23 as a substitute for claim 15, and claim 24 as a substitute for claim 19. RMTA App’x 1–5.

The proposed substitute claims are reproduced below, using underlining to indicate text added to the original claims and bracketed strikethrough to indicate text removed from the original claims:

[20(pre)] 20. A three-dimensional (3D) pointing device, which is handheld, subject to movements and rotations in dynamic environments, comprising:

[20(a)] a single housing associated with said movements and rotations of the 3D pointing device in a spatial pointer reference frame;

[20(b)] a single printed circuit board (PCB) enclosed by the housing;

[20(c)] a six-axis motion sensor module attached to the PCB, comprising a rotation sensor for detecting and generating a first signal set comprising angular velocities ω_x, ω_y, ω_z associated with said movements and rotations of the 3D pointing device in the spatial pointer reference frame,

[20(d)] an accelerometer for detecting and generating a second signal set comprising axial accelerations Ax, Ay, Az associated with said movements and rotations of the 3D pointing device in the spatial pointer reference frame;

[20(e)] ~~[and]~~ a processing and transmitting module, comprising a data transmitting unit electrically connected to the six-axis motion sensor module for transmitting said first and second signal sets thereof and a computing processor for receiving and calculating said first and second signal sets from the data transmitting unit,

[20(f)] communicating with the six-axis motion sensor module to calculate a resulting deviation comprising resultant angles in said spatial pointer reference frame

[20(g)] by utilizing a comparison to compare the first signal set with the second signal set whereby said resultant angles in the spatial pointer reference frame of the resulting deviation of the six-axis motion sensor module of the 3D pointing device are obtained under said dynamic environments,

wherein the comparison utilized by the processing and transmitting module further comprises an update program to obtain an updated state based on a previous state associated with said first signal set and a measured state associated with said second signal set;

[20(h)] wherein the measured state includes a measurement of said axial accelerations of said second signal set and a predicted measurement of said axial accelerations of said second signal set obtained based on the first signal set without using any derivatives of the first signal set[.]; and

[20(i)] a display device built-in to and integrated with the 3D pointing device and associated with a display reference frame, wherein said resultant angles of the resulting deviation in the spatial pointer reference frame are translated to a movement pattern in the display reference frame.

[21] The 3D pointing device of claim 1, wherein the 3D pointing device is a cellular phone, and wherein the PCB enclosed by the housing comprises at least one substrate having a first longitudinal side configured to be substantially parallel to a longitudinal surface of the housing.

[22(Pre)] 22. A method for obtaining a resulting deviation including resultant angles in a spatial pointer reference frame of a three-dimensional (3D) pointing device utilizing a six-axis motion sensor module attached to a single PCB therein and subject to movements and rotations in dynamic environments in said spatial pointer reference frame, wherein the 3D pointing device comprises a single housing unit and a display device built-in to and integrated with the 3D pointing device and associated with a display reference frame, comprising the steps of:

[22(a)] obtaining a previous state of the six-axis motion sensor module; wherein the previous state includes an

initial-value set associated with previous angular velocities gained from the motion sensor signals of the six-axis motion sensor module at a previous time T−1;

[22(b)] obtaining a current state of the six-axis motion sensor module by obtaining measured angular velocities ω_x, ω_y, ω_z gained from the motion sensor signals of the six-axis motion sensor module at a current time T;

[22(c)] obtaining a measured state of the six-axis motion sensor module by obtaining measured axial accelerations Ax, Ay, Az gained from the motion sensor signals of the six-axis motion sensor module at the current time T and calculating predicted axial accelerations Ax′, Ay′, Az′ based on the measured angular velocities ω_x, ω_y, ω_z of the current state of the six-axis motion sensor module without using any derivatives of the measured angular velocities ω_x, ω_y, ω_z;

[22(d)] said current state of the six-axis motion sensor module is a second quaternion with respect to said current time T;

[22(e)] comparing the second quaternion in relation to the measured angular velocities ω_x, ω_y, ω_z of the current state at current time T with the measured axial accelerations Ax, Ay, Az and the predicted axial accelerations Ax′, Ay′, Az′ also at current time T;

[22(f)] obtaining an updated state of the six-axis motion sensor module by comparing the current state with the measured state of the six-axis motion sensor module; ~~[and]~~

[22(g)] calculating and converting the updated state of the six axis motion sensor module to said resulting deviation comprising said resultant angles in said

spatial pointer reference frame of the 3D pointing device.

[23] 23. The method for obtaining a resulting deviation of a 3D pointing device of claim 14, further comprises the step of outputting the updated state of the six-axis motion sensor module to the previous state of the six-axis motion sensor module; and wherein said resultant angles of the resulting deviation includes yaw, pitch and roll angles about each of three orthogonal coordinate axes of the spatial pointer reference frame and said angular velocities ω_x, ω_y, ω_z and said second quaternion are represented by at least one Extended Kalman Filter equation; and the step of using at least one Jacobian to linearize said measured state.

[24(Pre)] 24. A method utilizing at least one Extended Kalman Filter equation for obtaining a resulting deviation including resultant angles in a spatial pointer reference frame of a three-dimensional (3D) pointing device utilizing a six-axis motion sensor module attached to a single PCB therein and subject to movements and rotations in dynamic environments in said spatial pointer reference frame, wherein the 3D pointing device comprises a cellular phone with a display device built-in to and integrated with the 3D pointing device and associated with a display reference frame, comprising the steps of:

[24(a)] obtaining a previous state of the six-axis motion sensor module; wherein the previous state includes an initial-value set associated with previous angular velocities gained from the motion sensor signals of the six-axis motion sensor module at a previous time T−1;

[24(b)] obtaining a current state of the six-axis motion sensor module by obtaining measured angular velocities ω_x, ω_y, ω_z gained from the motion sensor signals of the six-axis motion sensor module at a current time T;

[24(c)] obtaining a measured state of the six-axis motion sensor module by obtaining measured axial accelerations Ax, Ay, Az gained from the motion sensor signals of the six-axis motion sensor module at the current time T and calculating predicted axial accelerations Ax′, Ay′, Az′ based on the measured angular velocities ω_x, ω_y, ω_z of the current state of the six-axis motion sensor module without using any derivatives of the measured angular velocities ω_x, ω_y, ω_z;

[24(d)] said current state of the six-axis motion sensor module is a second quaternion with respect to said current time T; said measured angular velocities ω_x, ω_y, ω_z and said second quaternion are represented by at least one Extended Kalman Filter equation; and at least one Jacobian is used to linearize said measured state;

[24(e)] comparing the second quaternion in relation to the measured angular velocities ω_x, ω_y, ω_z of the current state at current time T with the measured axial accelerations Ax, Ay, Az and the predicted axial accelerations Ax′, Ay′, Az′ also at current time T;

[24(f)] obtaining an updated state of the six-axis motion sensor module by comparing the current state with the measured state of the six-axis motion sensor module; [~~and~~]

[24(g)] calculating and converting the updated state of the six axis motion sensor module to said resulting deviation comprising said resultant angles in said spatial pointer reference frame of the 3D pointing device~~[.]~~; and

[24(h)] translating said resultant angles of the resulting deviation to a movement pattern in the display reference frame.

RMTA App'x 1–5 (claim numbers added, and formatting added for consistency and to match the original claims).

CyWee states that the proposed amendments in substitute claim 20 are (1) "to clarify that the 3D pointing device is handheld"; (2) to clarify "that the 'measured state' includes both the measurement and predicted measurement of the axial accelerations of the second signal set"; (3) "to limit the embodiments to those with the sensor module attached to a single PCB and contained within a single housing," and (4) "to limit the claimed device to a 3D pointing device with an integrated display screen." RMTA 1. CyWee intends proposed substitute claim 21, which depends from claim 1, to "further limit the 3D pointing device . . . to a cellular phone device." *Id.* at 19.

CyWee also states that proposed substitute claim 22 "clarifies that the 3D pointing device used in the method is handheld, limits the embodiments to those with the sensor module attached to a single PCB within a single housing, and limits the claimed method to a 3D pointing device with an integrated display screen"; proposed substitute claim 23 "clarifies that the angular velocities and the second quaternion are represented by an Extended Kalman Filter ('EKF')"; and proposed substitute claim 24 "contains all of the clarifications and limitations of the preceding Proposed Contingent Claims." *Id.* at 1–2.

B. Preliminary Matters

Before addressing the merits of CyWee's Revised Motion to Amend, we consider three threshold matters: (1) the question of whether LGE may raise new arguments in its Opposition to the Revised Motion to Amend that

ZTE did not previously raise; (2) CyWee's motion to exclude certain exhibits relating to LGE's Opposition, and (3) objections by CyWee and LGE to the demonstrative exhibits used in the oral hearing. We address these issues in turn.

1. Whether LGE May Raise New Arguments That ZTE Did Not Previously Raise

When we joined LGE to this proceeding under 35 U.S.C. § 315(c), we noted that LGE had agreed to act in a passive "understudy" role and would not assume an active role unless ZTE ceased to participate in the *inter partes* review. Paper 36, 46. After ZTE declined to oppose CyWee's Revised Motion to Amend, we allowed LGE to "present arguments and evidence, independently from ZTE, in response to CyWee's Revised Motion to Amend," which were "limited solely to the issues raised in CyWee's Revised Motion to Amend." Paper 50, 9.

LGE's Opposition to the Revised Motion to Amend made some arguments that ZTE could have made in its Opposition to the Motion to Amend. These new arguments included the following: (1) that CyWee has failed to meet its burden with respect to its revised motion to amend by failing to adequately address whether there is written description support for the proposed substitute claims *as a whole* (Opp. RMTA, 1–3); (2) that limitation 20(i) introduces a process step that makes apparatus claims 20 and 21 indefinite (*id.* at 6–7); (3) that the '438 patent disclosure does not adequately support predicting axial limitations without using any derivatives of the measured angular velocities as recited in limitations 20(h), 22(c), or 24(c) (*id.* at 8–9); (4) that the '438 patent disclosure does not adequately enable certain aspects of limitations 20(g), 20(h), 22(c), 22(e)–(g), 24(c), or

24(e)–(g) (*id.* at 9–15); (5) that CyWee is estopped under 37 C.F.R. § 42.73 from making the proposed amendments (*id.* at 15); and (6) that the proposed substitute claims are ineligible subject matter under 35 U.S.C. § 101 (*id.* at 24–25).[34]

In briefing that we authorized after the oral hearing, CyWee argued that, in general, replies and sur-replies are limited to arguments raised in the preceding brief, so by analogy, the same limitation should apply to arguments made in opposition to a revised motion to amend. Paper 82, 1–2 (citing CTPG 72–74). CyWee contends that "[i]t would be counterintuitive to allow the RMTA opposition to re-open an unrestricted universe of issues and arguments never addressed in response to the original MTA when the RMTA itself is limited to 'the preliminary guidance or the petitioner's opposition.'" *Id.* at 2 (citing CTPG 73).

CyWee also noted that we had limited LGE's participation in the proceeding "solely to the issues raised in CyWee's Revised Motion to Amend." *Id.* (emphasis omitted) (quoting Paper 50, 9). According to CyWee, "[a]ny issue that could have been raised previously, *i.e.*, before the RMTA, including [the four issues listed above in this decision] is, by definition, not an issue limited to the RMTA." *Id.* CyWee contends that "[a] contrary rule would invite a lead petitioner to drop out only to give a joined petitioner another 'bite' at the 'motion to amend apple' after the preliminary guidance rejected its first wave of attacks." *Id.* CyWee argues that this concern is

[34] Before the oral hearing, CyWee specifically raised the issue of whether LGE should be precluded as to issues 1 and 6. *See* Reply RMTA 3, 24–25. LGE responded on the preclusion issue as to issue 6. *See* Sur-reply RMTA 11.

particularly significant given that LGE would have been time barred if not for being joined to this case. *See id.* at 3–5.

LGE argues that there is no explicit limitation in the Board's rules or orders that would limit the scope of arguments LGE can raise in its Opposition to the Revised Motion to Amend. Paper 83, 1–3. According to LGE, the public interest is best served by allowing LGE to oppose the Revised Motion to Amend in a meaningfully adversarial way, including by raising arguments that ZTE had insufficiently developed, as an alternative to the disfavored option in which the Board raises such issues *sua sponte*. *Id.* at 3 (citing *Hunting Titan, Inc. v. DynaEnergetics Europe GmbH*, IPR2018-00600, Paper 67 at 25 (PTAB July 6, 2020) (precedential)). LGE contends that this is consistent with the rationale by which we allowed LGE to step into the role of lead petitioner with respect to the Revised Motion to Amend. *See id.* at 3–4.

LGE also argues that in deciding the Revised Motion to Amend, we must consider the record as a whole, including any new arguments that LGE has raised on the record. *Id.* at 5 (citing *Nike, Inc. v. Adidas AG*, 955 F.3d 45, 51 (Fed. Cir. 2020) ("[T]he Board must consider the *entirety* of the record before it when assessing the patentability of amended claims.")).

Under the circumstance of this case, we need not decide whether LGE's new arguments, made for the first time in its Opposition, are improper, because they are not determinative of our decision. *See Boston Scientific Scimed, Inc. v. Cook Group Inc.*, 809 F. App'x 984, 990 (Fed. Cir. 2020) (holding that once a petitioner has prevailed on all its challenged claims, "the Board need not address issues that are not necessary to the resolution of the proceeding"); *Beloit Corp. v. Valmet Oy*, 742 F.2d 1421,

1423 (Fed. Cir. 1984) (holding that once a dispositive issue is decided, there is no need to decide other potentially dispositive issues). As discussed below, we conclude that proposed substitute claims 20–24 are unpatentable under § 103, and find that proposed substitute claims 21 and 24 introduce new matter by adding the term "cellular phone." While we do not address the substance of LGE's new arguments in the decision below, this neither reflects a determination for or against the propriety of LGE's new arguments.

2. CyWee's Motion to Exclude

CyWee moves to exclude Exhibits 1046–1058, which LGE submitted to support its Opposition to CyWee's Revised Motion to Amend. Paper 66 1–2 ("Mot. Exclude). LGE filed an Opposition to this Motion (Paper 69, "Opp. Mot. Exclude"), and CyWee filed a Reply (Paper 73, "Reply Mot. Exclude"). CyWee raises two grounds for excluding the exhibits, which we address below.

(a) <u>Objection Under Fed. R. Evid. 403</u>

First, "CyWee objects to [Exhibits 1046–1058] as unfairly prejudicial under Fed. R. Evid. 403" because they were "submitted solely by LG[E], and not the original petitioner ZTE." Mot. Exclude 2, 4–5. CyWee states that it made its objections to this evidence in its Request for Reconsideration (Paper 52) of our Decision (Paper 50) in which we allowed LGE to step into the role of lead petitioner in opposing the Revised Motion to Amend. *Id.* at 2. CyWee says that it also objected to LGE's participation in the oral hearing

(Paper 61). *Id.* For its Motion to Exclude, CyWee relies on the arguments it made in its Request for Reconsideration. *See* Mot. Exclude 4–5.[35]

LGE argues that CyWee's objections were untimely because, under 37 C.F.R. § 42.64(b)(1), "[o]nce a trial has been instituted, any objection must be **filed within five business days of service of evidence** to which the objection is directed.'" Reply Mot. Exclude 1 (alteration in original). According to LGE, it filed and served the contested exhibits on September 30, 2020, but CyWee did not object until October 21 (PO Reply RMTA, Paper 65) or October 23 (the Motion to Exclude). *Id.* at 1–2. LGE also contends that CyWee did not identify any grounds for its objections with "s[ufficient] particularity to allow correction in the form of supplemental evidence." *Id.* at 8 (quoting 37 C.F.R. § 42.64(b)(1)).

In response to LGE's timeliness challenge, CyWee contends that the objections were timely because LGE and the Board were aware of its generalized objection before LGE submitted the challenged exhibits. *See* Reply Mot. Exclude 2.

We agree that CyWee apprised the Board of its opposition to LGE's participation in the remainder of the trial prior to LGE's submission of the challenged exhibits. But CyWee's reliance on its generalized objection to LGE's participation in the trial is insufficient to comply with the regulation, particularly after the Board's ruling that allowed LGE's participation. CyWee did not make any specific objection alleging that the contents of LGE's exhibits were inadmissible under Rule 403 of the Federal Rules of

[35] Our reasons for denying CyWee's Request for Reconsideration are set forth in our Decision denying the Request. Paper 71. We need not repeat those reasons here.

Evidence until it filed its Motion to Exclude. Thus, we find that CyWee did not make a timely objection to the challenged exhibits that "identif[ies] the grounds for the objection with sufficient particularity to allow correction in the form of supplemental evidence." 37 C.F.R. § 42.64(b)(1).

Also, even if CyWee had made timely objections, its Motion to Exclude does not clearly explain why LGE's exhibits are unfairly prejudicial under Rule 403, independent of CyWee's generalized objection to LGE's active participation in the trial. That generalized objection is insufficient in light of the Board's ruling allowing LGE's active participation.

Rule 403 states that we "may exclude relevant evidence if its probative value is substantially outweighed by a danger of . . . unfair prejudice." Fed. R. Evid. 403. However, CyWee does not discuss the probative value of the exhibits[36] or the nature of the alleged unfair prejudice as it relates to the contents of those exhibits. The only unfair prejudice CyWee raises is a generalized prejudice that CyWee believes it has suffered by our decision to allow LGE to oppose its Revised Motion to Amend. However, CyWee does not tie this alleged prejudice to the specific contents of the contested exhibits.

Exhibits 1046–1058, as a whole, are highly probative to the issues raised in CyWee's Revised Motion to Amend. They include, among other things, Professor LaViola's second deposition transcript (Ex. 1048), the asserted prior art references (Exs. 1049, 1050), and the declaration of LGE's

[36] CyWee contends that since LGE should not be allowed to submit evidence opposing the Revised Motion to Amend, "LG[E]'s proffered evidence therefore has no probative value." But whether LGE should be allowed to submit evidence is a different question than whether the proffered evidence has probative value.

expert Professor Michalson (Ex. 1051). Given their probative nature, and the lack of specific evidence of unfair prejudice tied to contents of the exhibits themselves, we find that CyWee has not set forth a valid reason to exclude the exhibits under Rule 403.

(b) Objection to Exhibits 1047 and 1048 Under Fed. R. Evid. 401

CyWee separately objects to Exhibits 1047 and 1048 under Fed. R. Evid. 401 and 403 on the ground that the exhibits are irrelevant and "merely duplicative, unfairly prejudicial and merely confuse the issues." Mot. Exclude 2–3; *see also id.* at 5–7. Exhibit 1047 is a copy of the '438 patent with markup that Professor LaViola added during his second deposition, dated September 18, 2020. *See id.* at 5. Exhibit 1048 is the transcript of that deposition. Ex. 1048, 1. Specifically, CyWee challenges LGE's use of the transcript regarding

> (1) support for claim limitations that are unchanged since the Board's Preliminary Guidance ([Opp. RMTA] 2), (2) a [person of ordinary skill in the art]'s understanding of the equations disclosed in the '438 patent (*id.* at 8–14), (3) a purported comparison of other amended claims from a different IPR brought by a different party (*id.* at 15), and (4) an assertion that the '438 patent is directed to patent ineligible subject matter (*id.* at 24–25).

Mot. Exclude 5.

First, we address the matter of timing. CyWee states that it filed objections to these exhibits on September 23, 2020. *Id.* at 3 (citing Paper 59). LGE contends that CyWee did not object to the contents of Exhibit 1047, or to the challenged deposition contents, at Professor LaViola's deposition itself, contrary to 37 C.F.R. § 42.64(a). Opp. Mot. Exclude 4–5

(citing Ex. 1048, 128:2–20 (introducing a version of Ex. 1047 without objection from CyWee's counsel)).

We agree with LGE that CyWee's objections were untimely. "An objection to the admissibility of deposition evidence must be made during the deposition." 37 C.F.R. § 42.64(a). The purpose of this rule is so that the opposing party may submit "[e]vidence to cure the objection . . . during the deposition." *Id.* Waiting until after the deposition deprives the opposing party of that opportunity.

Even if we were to consider CyWee's objections timely, we would find CyWee's arguments for excluding Exhibits 1047 and 1048 unpersuasive. We address these arguments below.

First, CyWee contends that Professor LaViola's second deposition transcript and the marked-up '438 patent concern "claim limitations that are unchanged since the Board's Preliminary Guidance." Mot. Exclude 5 (citing Opp. RMTA, 2). According to CyWee, when ZTE originally deposed Professor LaViola in 2019, prior to ZTE's Reply to the Patent Owner Response, Professor LaViola testified about "a [person of ordinary skill in the art]'s understanding of the '438 patent specification, including the equations recited therein and disclosure of elements of Kalman and extended Kalman filters." *Id.* (citing Ex. 1028, 20–42). CyWee contends that the annotations on Exhibit 1047 focus on these same equations. *Id.* Thus, according to CyWee, this testimony is "merely duplicative of evidence that has already been of record and considered for issues that have been decided," and is thus "not relevant to any issue that remains to be decided." *Id.* at 6. CyWee also argues that "[c]onsideration of the evidence will . . . merely infuse needless confusion and unfair prejudice." *Id.*

LGE responds that Exhibits 1047 and 1048 are not duplicative of any "issues that have been decided" because in this proceeding, no issues have yet been decided on the merits. Opp. Mot. Exclude 12. LGE also states that, "[i]n any event, expert testimony related to the issues raised in the expert's declaration is highly relevant." *Id.*

We agree with LGE. At the time of Professor LaViola's first deposition in 2019, CyWee had not filed its Revised Motion to Amend in which it introduced limitations requiring the use of "at least one Extended Kalman Filter equation." RMTA App'x 3–4.[37] Thus, LGE's questioning on that issue, and Professor LaViola's markup of these equations on a copy of the '438 patent, are highly probative to whether these new limitations find support in the '438 patent or would have been obvious in view of the prior art—both of which are new issues raised by CyWee's Revised Motion to Amend.

Second, CyWee argues that LGE uses Exhibit 1048 to show "a [person of ordinary skill in the art]'s understanding of the equations disclosed in the '438 patent." Mot. Exclude 5 (citing Opp. RMTA, 8–14). According to CyWee, "[m]any of the issues regarding the adequacy of disclosure for which LG[E] cites Exhibit 1048 were previously decided and addressed in the Board's Preliminary Guidance," so the proffered evidence

[37] These new limitations are substantially different from corresponding limitations in proposed substitute claims 23 and 24 of the original Motion to Amend, which required using "elements of an Extended Kalman Filter." Paper 19 App'x, 3–4. The original version of proposed substitute claims 23 and 24 also omitted the later-added requirement of a "Jacobian to linearize said measured state." *See id.* In our Preliminary Guidance, we expressed our preliminary view that the original limitations of proposed substitute claims 23 and 24 were indefinite. *See* Paper 35, 10.

is "not relevant to any issue that remains to be decided," and considering that evidence would "merely infuse needless confusion and unfair prejudice." *Id.* at 6.

LGE counters that "the Board's Preliminary Guidance is just that—preliminary," so it is not a reflection of any resolved issues in the proceeding. Opp. Mot. Exclude 13 (citing Paper 34, 2–3 (stating that the Preliminary Guidance is preliminary and non-binding)).

We agree with LGE that our Preliminary Guidance did not reflect the resolution of any issues, and did not in itself preclude the submission of additional evidence, particularly on issues raised in the Revised Motion to Amend, such as evidence relating to the alleged extended Kalman filter equations and Jacobians in the '438 patent.

CyWee's third argument is that LGE uses Exhibit 1048 to show "a purported comparison of other amended claims from a different IPR brought by a different party." Mot. Exclude 5 (citing Opp. RMTA, 15); *see also id.* at 6–7 (citing Opp. RMTA 15). CyWee's fourth argument is that LGE uses the deposition transcript to show "an assertion that the '438 patent is directed to patent ineligible subject matter." Mot. Exclude 5 (citing Opp. RMTA, 24–25).

As we discuss above, our decision does not rely on the new issues that LGE raises in its Opposition to the Revised Motion to Amend that ZTE could have raised in opposition to the original Motion to Amend. CyWee's third and fourth arguments relate to two such issues (estoppel and patent eligibility under § 101). *See supra* part V.B.1. Thus, CyWee's third and fourth arguments are moot.

For the above reasons, we deny CyWee's Motion to Exclude Exhibits 1046–1058.

3. Objection to Demonstratives

CyWee and LGE each object to demonstratives used by the opposing side during the oral hearing. For the reasons below, we overrule those objections.

CyWee objects to slides 19, 22, 25, 33, 36–38, 42, 73, and 91–93 because they "contain excerpted testimony that omits objections to the testimony appearing in the transcript and/or omits additional surrounding testimony and evidence needed for a full and complete understanding of the testimony." Paper 80, 2. CyWee objects to slides 31, 29, 33, 39, 51–56, 66–68, 71, and 77–88 on the ground that "[t]he purported underlying evidence presented in these slides is presented as testimony of a qualified technical expert, but because LG[E]'s expert Dr. Michalson did not write his report, it is in fact merely attorney argument." *Id.* Finally, CyWee objects to slides 43, 47–48, and 90 on the ground that they are "merely duplicative of evidence already of record and/or go[] beyond the limited purpose pursuant to which LG[E] is entitled to participate as set forth in, *inter alia*, Papers 66 and 73." *Id.* at 2–3.

LGE objects to slides 13–15 as "contain[ing] brand new arguments not present in any briefs, and also cit[ing] to new cases not cited in the briefs." Paper 78, 2. LGE objects to slide 30 because the "[l]ast bullet point is a new argument not present in the briefs." *Id.* LGE objects to slide 44 because the phrase "In fact, it does not" is a new argument not present in the briefs. *Id.*

We have considered the objections. However, (1) the demonstratives are not submitted as evidence, (2) not all the challenged slides were actually used in the hearing, and (3) we are capable of properly weighing the material referenced in the demonstrativs based on its probative value. We also have access to the exhibits in the case, so we are able to see the full context of the quoted material, and we have taken that context into consideration in our decision.

Therefore, the objections by both CyWee and LGE are *overruled*.

C. CyWee's Burden to Show Compliance with Statutory and Regulatory Requirements

We next consider whether CyWee has met its burden to show that it has met the statutory and regulatory requirements for a motion to amend.

"Before considering the patentability of any substitute claims, . . . the Board first must determine whether the motion to amend meets the statutory and regulatory requirements set forth in 35 U.S.C. § 316(d) and 37 C.F.R. § 42.121." *Lectrosonics, Inc. v. Zaxcom, Inc.*, IPR2018-01129, Paper 15 at 4 (PTAB Feb. 25, 2019) (precedential). Accordingly, a patent owner must make a claim listing reproducing each proposed substitute claim, and must make an initial showing to demonstrate the following: (1) the amendment proposes a reasonable number of substitute claims; (2) the proposed claims are supported in the original disclosure (and any earlier filed disclosure for which the benefit of filing date is sought); (3) the amendment responds to a ground of unpatentability involved in the trial; and (4) the amendment does not seek to enlarge the scope of the claims of the patent or introduce new subject matter. *See* 35 U.S.C. § 326(d); 37 C.F.R. § 42.121.

CyWee has included a claim listing reproducing each proposed substitute claim. *See Lectrosonics*, Paper 15, at 8 (citing 37 C.F.R. § 42.121(b)). CyWee also contends that it has proposed a reasonable number of substitute claims, and that the proposed amendments do not enlarge the scope of the claims. RMTA 3–4. LGE does not dispute these contentions. We agree with CyWee, because there is one proposed substitute claim per original challenged claim, and the claim amendments add substantive limitations without removing any limitations from the original claims. *See* RMTA App'x 1–5.

However, LGE contends that CyWee has not met its burden to show that that some of the amendments in proposed substitute claims 20 and 22 respond to a ground of unpatentability involved in the trial, and that the proposed substitute claims do not introduce new subject matter. *See* Opp. RMTA 1–9. We address LGE's contentions in turn.

1. Responding to a Ground of Unpatentability Involved in the Trial

CyWee argues that its proposed amendments are "responsive to a ground for institution" because they add substantive limitations to the proposed substitute claims, in response to the allegations in the Petition that the original claims are unpatentable under § 103. RMTA 4.

In response, LGE argues that CyWee has failed to adequately explain why the additions in limitation 20(h) and a deletion in proposed substitute claim 22 respond to a ground of unpatentability. Opp. RMTA 3–4. In particular, LGE contends that CyWee provides no explanation for how the added phrases "said axial accelerations of" and "of said axial accelerations of said second signal set" in limitation 20(h) respond to a ground of

unpatentability. *Id.* at 3 (emphasis omitted). LGE also argues that in deposition, CyWee's expert Professor LaViola admitted that he did not believe that CyWee's proposed deletion of the word *and* in proposed substitute claim 22 responded to any ground of unpatentability in the trial. *Id.* at 3–4 (citing Ex. 1048, 215:1–19).

We determine that CyWee has met its burden to show that the proposed amendments respond to a ground of unpatentability involved in the trial. Although CyWee's Revised Motion to Amend does not specifically explain the reason for the amendments in limitations 20(h) and 22, other proposed amendments in substitute claims 20 and 22 clearly respond to issues raised in the Petition. "The rule does not require . . . that every word added to or removed from a claim in a motion to amend be solely for the purpose of overcoming an instituted ground." *Lectrosonics*, Paper 15, at 5. Allowing a patent owner to make other amendments to address other potential issues, "when a given claim is being amended already in view of a 35 U.S.C. § 102 or § 103 ground, serves the public interest by helping to ensure the patentability of amended claims." *Id.* at 6 (citing *Veeam Software Corp. v. Veritas Techs., LLC*, IPR2014-00090, Paper 48 at 26–29 (PTAB July 17, 2017)).

2. Support for the Proposed Substitute Claims

We next consider whether the proposed substitute claims introduce new matter in violation of the written description requirement of 35 U.S.C. § 112 para. 1. New subject matter is any addition to the claims that lacks sufficient support in the subject patent's original disclosure. *See TurboCare Div. of Demag Delaval Turbomach. v. Gen. Elec. Co.*, 264 F.3d 1111, 1118 (Fed. Cir. 2001) ("When [an] applicant adds a claim . . . , the new claim[]

must find support in the original specification."). The Board requires that a patent owner show in a motion to amend that there is written-description support in the originally filed disclosure of the subject patent for each proposed substitute claim, and also set forth support in an earlier-filed disclosure for each claim for which the patent owner seeks the benefit of the earlier-filed disclosure's filing date. *See* 37 C.F.R. §§ 42.121(b)(1), 42.121(b)(2).

The test for determining compliance with the written description requirement is not simply the presence or absence of literal support in the specification for the claim language, but rather, whether the disclosure of the application as originally filed reasonably conveys to a person of ordinary skill in the art that the inventor had possession of the claimed subject matter at the time of filing. *Ariad Pharms., Inc. v. Eli Lilly & Co.*, 598 F.3d 1336, 1351 (Fed. Cir. 2010) (en banc); *Vas-Cath, Inc. v. Mahurkar*, 935 F.2d 1555, 1563 (Fed. Cir. 1991); *In re Kaslow*, 707 F.2d 1366, 1375 (Fed. Cir. 1983).

In its Revised Motion to Amend, CyWee contends that each proposed substitute claim "is supported by the original disclosure of the '438 Patent as filed in the '934 Application and/or the related '558 Provisional, thereby reasonably conveying to one of ordinary skill in the art that the inventor was in possession of the claimed subject matter" as of the applicable filing dates. RMTA 5. CyWee also provides a claim listing appendix identifying what it regards as support in the '934 and '558 applications for each of the limitations in proposed substitute claims 20–24. *Id.* at App'x 7–18. In the main text of the Revised Motion to Amend, CyWee specifically addresses only the new limitations introduced by the amendments to proposed substitute claims 20–24. *See id.* at 5–12; *see also* Opp. RMTA 1–2 (citing

Ex. 1048, 56:8–20 (testimony by Professor LaViola that in his expert report supporting the Revised Motion to Amend, "I don't see support based on th[e] prior patent application and the provisional application for the original claims")).

In the proposed substitute claims, CyWee has added the following limitations: (a) the pointing device is "handheld" (proposed substitute claim 20); (b) there is only a "single housing" or "single printed circuit board" (proposed substitute claims 20, 22, and 24); (c) there is a built-in "display device" and associated "display reference frame" (proposed substitute claims 20, 22, and 24); (d) the measurement and predicted measurement are of "said axial accelerations" (proposed substitute claim 20); (e) the pointing device is a "cellular phone" (proposed substitute claims 21 and 24); and (f) the method uses an extended Kalman filter equation (proposed substitute claims 23 and 24); and (g) the method uses a Jacobian to linearize the measured state (proposed substitute claims 23 and 24). *See* RMTA 5–13.

Of these new limitations, LGE challenges CyWee's showing of written description support for (e) and (g), requiring that the pointing device be a "cellular phone" and that the method uses a Jacobian. *See* Opp. RMTA 4–6, 7–8. LGE also challenges support for the original limitation in claims 1, 14, and 19, now carried-over into proposed substitute claims 20, 23, and 24, respectively, requiring the predicted measurement to be calculated "without using any derivatives" of the measured angular velocities. *See id.* at 8–11. In addition, LGE contends that CyWee has failed to provide support for the limitations of the proposed substitute claims as a whole. We address LGE's contentions as well as each of the newly added limitations below, and find that proposed substitute claims 21 and 24 contain new matter, but the

evidence of record does not show that proposed substitute claims 20 or 22–23 contain new matter.

(a) "handheld" (proposed substitute claim 20)

Proposed substitute claim 20 requires that the 3D pointing device be "handheld." RMTA App'x, 1.

CyWee argues that the '558 provisional application "discloses that the 3D pointing device may be 'a remote controller, a joystick or a cellular phone,'" which are all handheld devices. RMTA 6 (quoting Ex. 2017 ¶ 23) (citing Ex. 2017, Fig. 2; Ex. 2015 ¶ 33). CyWee also argues that the '934 application discloses "a handheld 3D pointing device," and specific embodiments including "a mouse of a computer or a pad of a videogame console." RMTA 6 (quoting Ex. 1002, 18 ¶ 2; *id.* at 62–65 (Figs 1–3, 5, 6); Ex. 2015 ¶ 34 (opining that a person of ordinary skill in the art would understand Figure 6 to depict a handheld device)).

These disclosures are sufficient for us to find that the "handheld" requirement does not add new matter, and LGE does not contend otherwise.

(b) "single housing," "single printed circuit board" (proposed substitute claims 20, 22, and 24)

Proposed substitute claim 20 adds that there is a "single" housing and a "single" PCB. RMTA App'x, 1. Proposed substitute claim 22 adds the requirement that the sensor module is "attached to a single PCB," and "wherein the 3D pointing device comprises a single housing unit." *Id.* at 2. Likewise, proposed substitute claim 24 adds the requirement that the sensor module is "attached to a single PCB." *Id.* at 3.

CyWee argues that the ’934 application discloses a single PCB and a single housing in Figures 3, 5, and 6. RMTA 8 (citing Ex. 1002, 63–65 (Figs. 3, 5, 6); Ex. 2015 ¶ 37).

These disclosures are sufficient for us to find that the “single” requirements for the housing and PCB do not add new matter, and LGE does not contend otherwise.

(c) <u>built-in “display device” and associated “display reference frame” (proposed substitute claims 20, 22, 24)</u>

Proposed substitute claim 20 recites “a display device built-in to and integrated with the 3D pointing device and associated with a display reference frame, wherein said resultant angles of the resulting deviation in the spatial pointer reference frame are translated to a movement pattern in the display reference frame.” RMTA App’x, 2. Proposed substitute claim 22 recites “wherein the 3D pointing device comprises . . . a display device built-in to and integrated with the 3D pointing device and associated with a display reference frame.” *Id.* Proposed substitute claim 24 recites “wherein the 3D pointing device comprises . . . a display device built-in to and integrated with the 3D pointing device and associated with a display reference frame.” *Id.* at 4.

CyWee argues that the ’934 application discloses that the 3D pointing device “‘may further comprise[] a built-in display’ that may be ‘integrated on the housing.’” RMTA 9 (quoting Ex. 1002, 36–37 ¶ 37) (citing Ex. 1002, 65 (Fig. 6)). CyWee also contends that the ’934 application “discloses that the claimed device can include ‘a mapping program for translating the resultant angles of the resulting deviation in the spatial pointer reference

frame to a movement pattern in a display reference frame.'" *id.* (quoting Ex. 1002, 34 ¶ 33) (citing Ex. 1002, 36–37 ¶¶ 36–38, 47–48, 51, 67 (Fig. 8)); *see also* PO Reply RMTA 4–5 (same).

We also note that the '934 application discloses that "the . . . display reference frame associated with a display may need not to be external to the spatial reference frame in terms of the hardware configuration of the present invention." Ex. 1002, 37 ¶ 37.

These disclosures are sufficient for us to find that this limitation does not add new matter, and LGE does not contend otherwise.[38]

(d) <u>measurement and predicted measurement of "axial accelerations" (proposed substitute claim 20)</u>

Proposed substitute claim 20 adds the requirement that the measured state includes a measurement of "<u>said axial accelerations of</u>" the second signal set and a predicted measurement "<u>of said axial accelerations of said second signal set</u>." RMTA App'x 1–2.

CyWee contends that the '934 application discloses this limitation because the described "measurement" is of axial accelerations Ax, Ay, Az, and the disclosed "predicted measurement" is of predicted measurements Ax′, Ay′, Az′, calculated from the first signal set. RMTA 9–10 (citing Ex. 1002, 34 ¶ 32). Also, CyWee argues that Figure 7 of the '934 application refers to obtaining "measured axial accelerations" and calculating "predicted axial accelerations." *Id.* at 10 (citing Ex. 1002, 66). Professor LaViola also

[38] LGE contends that the '558 provisional application does not disclose a device with a built-in display to which a movement pattern can be translated. Opp. RMTA 4–5 & n.5. Because we find that there is support in the '934 application, which LGE does not contest, we need not address that issue.

testified in his deposition that equation 8 of the ’438 patent disclosure would include “the measurement for the axial acceleration” and “the predicted acceleration.” *Id.* (quoting Ex. 1028, 31).

These disclosures are sufficient for us to find that this limitation does not add new matter, and LGE does not contend otherwise.

(e) “cellular phone” (proposed substitute claims 21, 24)

Proposed substitute claim 21 recites “wherein the 3D pointing device is a cellular phone,” and proposed substitute claim 24 similarly recites “wherein the 3D pointing device comprises a cellular phone.” RMTA App’x 2–4.

CyWee argues that the ’558 provisional application discloses that the 3D pointing device may be “a cellular phone,” and that “[t]he ’558 Provisional is incorporated by reference into the ’934 Application.” RMTA 10 (quoting Ex. 2017 ¶ 23) (citing Ex. 1002, 18).

LGE responds that CyWee “may not rely on essential material (disclosure of a ‘cellular phone’) present only in the incorporated-by-reference provisional application.” Opp. RMTA 6 (citing 37 C.F.R. § 1.57(d); *Droplets v. E*Trade*, 887 F.3d 1309, 1318 (Fed. Cir. 2018); *Sanofi-Aventis U.S. LLC v. Astrazeneca Pharm. LP*, IPR2016-00354, Paper 7 at 10 (PTAB June 28, 2016)).

We agree with LGE that the “cellular phone” limitation is essential material. According to 37 C.F.R. § 1.57(d), “‘[e]ssential material’ is material that is necessary to . . . [p]rovide a written description of the claimed invention . . . as required by 35 U.S.C. 112 [para. 1].” *Id.* Because the “cellular phone” limitation is necessary to provide a written description in

proposed substitute claims 21 and 24, it is "essential material" under this definition, and CyWee does not argue otherwise.

Essential material "may be incorporated by reference, but only by way of an incorporation by reference to a U.S. patent or U.S. patent application publication." *Id.*; *Droplets*, 887 F.3d at 1318. In the oral hearing, CyWee argued that a provisional application is a "U.S. patent application publication" under this rule. Tr. 69:9–72:13 (citing *Nomadix, Inc. v. Second Rule LLC*, No. CV0701946DDPVBKX, 2009 WL 10668158, at *26 (C.D. Cal. Jan. 16, 2009)).

We disagree that *Nomadix* supports CyWee's position. In that case, the district court held that an incorporation by reference to a provisional application was sufficient under 35 U.S.C. § 112, where at the time the non-provisional application was filed, "no regulation governed incorporation by reference." *Nomadix*, 2009 WL 10668158, at *24. But according to the court, "If § 1.57 applied to the [challenged] patent, there would be no question that the . . . provisional application was improperly incorporated." *Id.*

Because a U.S. provisional application is not a "U.S. patent or U.S. patent application publication," the '934 application's incorporation by reference of the '558 provisional application was ineffective as to the "cellular phone" embodiment.

CyWee also contends that the '934 application independently discloses a "cellular phone" because it discloses that the 3D pointing device "may further comprise[] a built-in display" that may be "integrated on the housing." *Id.* (quoting Ex. 1002, 36–37 ¶ 37) (citing Ex. 1002, 65 (Fig. 6)). CyWee contends that a person of ordinary skill in the art "would understand

that a cellular phone is a device with a "built-in display . . . integrated on the housing." *Id*. (citing Ex. 2015 ¶ 43; Ex. 2020, 3, 30–34 (illustrating cellular phones with built-in displays from the relevant time period)).

This argument is not persuasive, because even if a person of ordinary skill in the art would have understood that cellular phones have a built-in display, CyWee does not suggest that *only* cellular phones had built-in displays at the time of the claimed invention. So simply disclosing a built-in display is not equivalent to disclosing a cellular phone.

Finally, CyWee contends that Figure 6 of the '934 application depicts a cellular phone. *Id.* at 11 (citing Ex. 1002, 65 (Fig. 6)). Figure 6 of the '934 application is reproduced below:

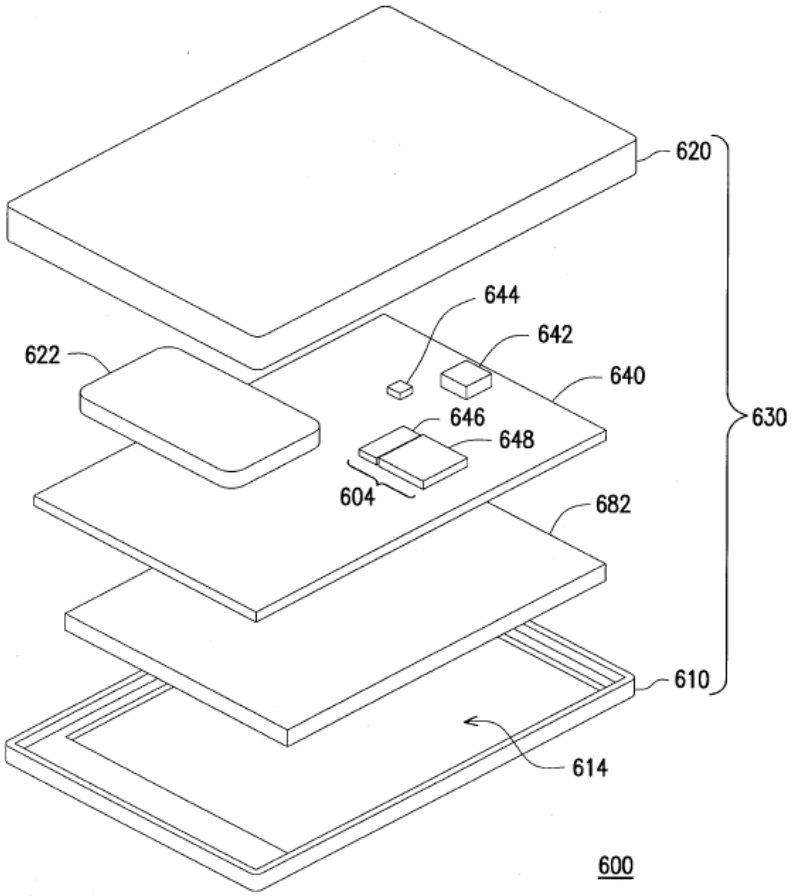

FIG. 6

Ex. 1002, 65. Figure 6 "is an exploded diagram showing a 3D pointing device 600." *Id.* at 36 ¶ 37. The device includes housing 630, which includes top and bottom covers 610 and 620, respectively. *See id.* at 37 ¶ 37. Adjacent to top cover 610 is built-in display 682, which "may . . . be integrated on the housing 630." *Id.*

LGE disagrees that Figure 6 reasonably conveys possession of a cellular phone, because it "does not depict any components for connecting with a cellular network (antenna, SIM card, etc.) or even components of a phone (such as a microphone and speaker)." Opp. RMTA 4 (citing Ex. 1051 ¶¶ 27–28).

We agree with LGE that the 3D pointing device in Figure 6 of the ’934 application is not explicitly a cellular phone, and we find that the figure does not reasonably convey to a person of ordinary skill in the art that the inventors had possession of a cellular phone embodiment at the time of filing.

For the above reasons, we find that CyWee has failed to show that the “cellular phone” limitations in proposed substitute claims 21 and 24 would not introduce new matter.

(f) <u>“Extended Kalman Filter equation” (proposed substitute claims 23, 24)</u>

Proposed substitute claim 23 recites “said angular velocities ω_x, ω_y, ω_z and said second quaternion are represented by at least one Extended Kalman Filter equation.” RMTA App’x 3. Similarly, proposed substitute claim 24 recites “said measured angular velocities ω_x, ω_y, ω_z and said second quaternion are represented by at least one Extended Kalman Filter equation.” *Id.* at 4.

CyWee contends that equations 5–10 of the ’934 application are extended Kalman filter equations, even though the application does not use that term. RMTA 12. (citing Ex. 1002, 44–45 ¶ 47; Ex. 2015 ¶ 47). Of these equations, CyWee argues that “equation 5 represents both the angular velocities and second quaternion.” *Id.* (citing Ex. 1028, 34 (LaViola deposition)).

These disclosures are sufficient for us to find that the extended Kalman filter limitation does not add new matter, and LGE does not contend otherwise.

(g) <u>a "Jacobian" to linearize the measured state (proposed substitute claims 23, 24)</u>

Proposed substitute claim 23 recites "the step of using at least one Jacobian to linearize said measured state." RMTA App'x 3. Similarly, proposed substitute claim 24 recites "at least one Jacobian is used to linearize said measured state." *Id.* at 4.

Relying on the testimony of Professor LaViola, CyWee argues that among extended Kalman filter equations 5–10 of the '934 application, equations 6, 7, and 10 are Jacobians that linearize the measured state. RMTA 12 (citing Ex. 2021 ¶ 46; Ex. 1028, 24).

LGE contends that CyWee's argument cites only to Professor LaViola's testimony and not to the '934 application. Opp. RMTA 7. LGE also argues that CyWee relies on inherency for this limitation, and has not adequately shown that any of the equations in the '934 application necessarily linearizes a measured state that includes "predicted axial accelerations." *Id.* at 7–8 (citing *In re Robertson*, 169 F.3d 743, 745 (Fed. Cir. 1999)); *see also* Sur-Reply RMTA 3 (arguing that Professor LaViola stated that the "Jacobian" limitation was not in the patent "specifically, but I believe **it's *implied***" (quoting Ex. 1048, 241:4–5)). Specifically, LGE argues that in his deposition, Professor LaViola identified the function h in equation 10 as the "measured state," but when asked whether it is possible to have an h function that does *not* include a predicted axial acceleration, Professor LaViola answered, "**Yes.** But it wouldn't work very well in my opinion." *Id.* at 4 (quoting Ex. 1048, 243:2–7).

We do not find LGE's arguments persuasive. First, we interpret Professor LaViola's deposition testimony as his agreement with opposing

counsel that, in a hypothetical situation, equation 10 could be modified to exclude predicted axial accelerations—not that equation 10 fails to necessarily describe a Jacobian that linearizes the measured state.

Second, we find unpersuasive LGE's contention that the patent disclosure as a whole, including equation 10, fails to show that the inventors had possession of a Jacobian that linearizes a measured state. The '934 application discloses that "the measured state correlated to the abovementioned second axial accelerations and in relation to the axial accelerations of accelerometers and current state may be obtained based on [equation 8]," which includes the *h* function. Ex. 1002, 27:13–16 ¶ 47. This passage refers to the "accelerations of accelerometers" (i.e., the measured axial accelerations) and the "second axial accelerations" (i.e., the predicted axial accelerations) discussed in the preceding paragraphs of the disclosure. *See id.* at 25 ¶ 45 ("[T]wo sets of axial accelerations may be obtained for the measured state of the six-axis motion sensor module; one may be the measured axial accelerations Ax, Ay, A[z] . . . and the other may be the predicted axial accelerations Ax′, Ay′, Ax′ . . . .").

Thus, the text of the '934 application supports Professor LaViola's testimony that equation 10 linearizes the measured state (including both measured and predicted axial accelerations), and CyWee's position that the "Jacobian" limitations have written description support. Thus, we do not find that the "Jacobian" limitations in proposed substitute claims 23 and 24 add new matter. [39]

---

[39] Our finding relates only to support for this limitation in equation 10 of the '934 application. While the evidence suggests that equations 6 and 7 represent Jacobians, they appear to be associated with the state model or

(h) <u>calculating the predicted measurement "without using any derivatives" of the measured angular velocities (proposed substitute claims 20, 22, 24)</u>

Proposed substitute claim 20 require that the calculation of the predicted measurement of the axial accelerations of the second signal set is obtained based on the first signal set "without using any derivatives of the first signal set." RMTA App'x 1–2. Similarly, proposed substitute claims 22 and 24 require that the calculation is performed "without using any derivatives of the measured angular velocities ω_x, ω_y, ω_z." *Id.* at 3–4.

This limitation was not in the original claims, as filed. *See* Ex. 1002, 54–60. During prosecution, the applicant added the limitation in a new claim 21 (now claim 19), and then before issuance, the Examiner introduced the limitation through an examiner amendment to claims 1 and 16 (now claims 1 and 14). *Id.* at 181, 199–200. The purpose of the amendment was to overcome a prior art reference. *See id.* at 185. Thus, these limitations are found in the issued claims of the '438 patent, and are also present in the claims that CyWee proposed in its original Motion to Amend. *Compare* MTA App'x 1–4, *with* RMTA App'x 1–4.

LGE acknowledges that the '934 application refers to "calculating predicted axial accelerations . . . based on the measured angular velocities," but contends that the application does not explain how to perform the calculation or how to do so without using derivatives. Opp. RMTA 8–9

"current state," rather than the measurement model or "measured state." *See* Ex. 1028, 24:7–11 (Professor LaViola's testimony that equations 6, 7, and 10 "linearize the state and measurement equations"); Ex. 1002, 27:1–21 ¶ 47 (text introducing equations 5–7 refers to the "current state," while text introducing equations 8–10 refers to the "measured state").

(citing Ex. 1002 ¶ 32, 36, 40–41, Figs. 7–8; Ex. 1041 ¶ 38–39). CyWee disagrees, based on the text of the ’934 application as well as testimony by Professor LaViola. Reply RMTA 6–7 (citing Ex. 1001, 8:50–56; Ex. 1048, 135, 164:12–16, 164:20–22, 225:24–226:2).

As we discuss above, this is a new argument raised by LGE for the first time in its Opposition, which does not affect our decision because we determine that proposed substitute claims 20, 22, and 24 which have this limitation are unpatentable under § 103 and proposed substitute claim 24 introduces new matter. *See supra* part V.B.1. Therefore, we need not decide this issue.

(i) Support for the Proposed Substitute Claims as a Whole

LGE argues that CyWee is required to present support for the proposed substitute claims as a whole, and not just for the amended features, and that this support “must be set forth in the motion to amend itself, not the claim listing.” Opp. RMTA 2 (emphasis omitted) (quoting *Lectrosonics*, Paper 15, at 8). According to LGE, allowing CyWee to meet its burden of showing written description support in a claim listing renders CyWee’s 25-page limit meaningless. Sur-Reply RMTA 2 n.4. LGE also cites a non-precedential case in which the Board denied a motion to amend because the patent owner did not show support for the claims as a whole. *Id.* at 2–3 (citing *Lippert Components v. Days Corp.*, IPR2018-00777, Paper 28 at 51–52, 2019 WL 4674259 (PTAB Sept. 24, 2019)).

LGE’s argument is equally applicable to CyWee’s original Motion to Amend. *Compare* MTA Claim Listing App’x, *with* RMTA Claim Listing App’x. And ZTE could have raised this issue in its Opposition to the Motion

to Amend. Thus, this is one of LGE's new arguments that we have declined to address in our decision. *See supra* part V.B.1. Ultimately, we do not need to address this issue because we determine that proposed substitute claims 20–24 are unpatentable under § 103 and proposed substitute claims 21 and 24 introduce new subject matter. *See supra* part V.B.1.

(j) Summary

To summarize, we find for the above reasons that proposed substitute claims 21 and 24 contain new matter, but that proposed substitute claims 20 or 22–23 do not contain new matter. As such, we find that proposed substitute claims 21 and 24 are unpatentable for failing to satisfy the written description requirement under 35 U.S.C. § 112, first paragraph.

D. PATENTABILITY OF THE PROPOSED SUBSTITUTE CLAIMS

Having considered whether CyWee has met its statutory and regulatory burden for a motion to amend, we next consider whether the record as a whole shows that the proposed substitute claims are patentable.

The Board must assess the patentability of proposed substitute claims "without placing the burden of persuasion on the patent owner." *Aqua Prods.*, 872 F.3d at 1328; *see Lectrosonics*, Paper 15 at 3–4 (discussing *Aqua Products* and the burden of persuasion). After *Aqua Products*, the Federal Circuit further clarified the burden of persuasion in *Bosch Automotive Service Solutions, LLC v. Matal*, 878 F.3d 1027 (Fed. Cir. 2017), *amended by Bosch Automotive Service Solutions, LLC v. Iancu*, No. 2015-1928 (Fed. Cir. Mar. 15, 2018).

According to *Aqua Products*, *Bosch*, and *Lectrosonics*, a patent owner does not bear the burden of persuasion to show that the proposed substitute

claims are patentable. Rather, ordinarily "the petitioner bears the burden of proving that the proposed amended claims are unpatentable by a preponderance of the evidence." *Bosch*, 878 F.3d at 1040 (as amended on rehearing); *Lectrosonics,* Paper 15 at 3–4. To determine whether a petitioner has proven the substitute claims are unpatentable, the Board focuses on "arguments and theories raised by the petitioner in its petition or opposition to the motion to amend." *Nike*, 955 F.3d at 51. The Board itself also may justify any finding of unpatentability by referring to evidence of record in the proceeding. *Lectrosonics*, Paper 15 at 4 (citing *Aqua Products*, 872 F.3d at 1311 (O'Malley, J.)).

LGE contends that proposed substitute claims 20–24 are unpatentable under 35 U.S.C. §§ 103(a), 112 para. 1, and 101, and that proposed substitute claims 20 and 21 are unpatentable under § 112 para. 2. *Id.* at 15–25. The table below is a summary of the unpatentability grounds LGE advances in its Opposition to the Revised Motion to Amend:

Claim(s) Challenged	35 U.S.C. §	Reference(s)/Basis
20–22, 24	112 para. 1	Enablement
20, 21	112 para. 2	Indefiniteness
20–24	103(a)	Withanawasam,[40] Bachmann, Bachmann2[41]
20–24	103(a)	Yamamoto,[42] Bachmann, Bachmann2
20–24	101	Eligibility

We address LGE's unpatentability arguments in the sections below.

[40] Withanawasam, *supra* note 17.

[41] Bachmann2, *supra* note 15.

[42] Yamamoto, US 2009/0201249 A1 (published Aug. 13, 2009) (Ex. 1050).

1. Definiteness, Enablement, Estoppel, and Patent Eligibility

LGE contends (A) that proposed substitute claim 20(i) introduces a process step that makes proposed substitute apparatus claims 20 and 21 indefinite (Opp. RMTA, 6–7); (B) that the '438 patent disclosure does not adequately enable certain aspects of limitations 20(g), 20(h), 22(c), 22(e)–(g), 24(c), or 24(e)–(g) (*id.* at 9–15); (C) that CyWee is estopped under 37 C.F.R. § 42.73 from making the proposed amendments (*id.* at 15); and (D) that the challenged claims are ineligible subject matter under 35 U.S.C. § 101 (*id.* at 24–25).

LGE's definiteness, enablement, estoppel, and patent eligibility arguments relate to limitations found in the original claims and in the claims that CyWee proposed in its original Motion to Amend. *Compare* MTA App'x 1–4, *with* RMTA App'x 1–5. As we discuss above, these new arguments by LGE do not affect our decision because we determine that proposed substitute claims 20–24 are unpatentable under § 103 and that proposed substitute claims 21 and 24 introduce new matter. *See supra* part V.B.1. Therefore, we need not decide these issues.

2. Obviousness of Proposed Substitute Claims 20–22 over Withanawasam and Bachmann

LGE contends that proposed substitute claims 20–22 are unpatentable under 35 U.S.C. § 103(a) as obvious over Withanawasam in view of Bachmann. Opp. RMTA 15–22. For the reasons below, we determine that a preponderance of the evidence supports LGE's contention. We note that in *Google v. CyWee*, the Board determined that a proposed substitute for claim 1 with similar amendments was unpatentable based on the same

Withanawasam–Bachmann combination. *See* IPR2018-01258, Paper 86, at 74–85. To the extent that CyWee's proposed substitute claim 20 is identical to the proposed substitute claim held unpatentable in that case, we adopt the Board's findings in that final written decision. Below, we discuss the evidence as it relates to CyWee's proposed substitute claims in this case, with particular emphasis on the new claim features that are different from the features of the proposed claims that the Board addressed in *Google v. CyWee*.

(a) Overview of Withanawasam

Withanawasam has a filing date of June 3, 2009. Ex. 1049, code (22). This predates November 11, 2010, the filing date of the '934 application which issued as the '438 patent. Ex. 1001, codes (21), (22). It also predates January 6, 2010, the filing date of the provisional '558 application, to which the '438 patent claims priority. Ex. 1001 1:13–15, code (60). CyWee does not allege that any of the proposed substitute claims antedate Withanawasam. *See* Reply RMTA 10–11.[43] Thus, we conclude that Withanawasam is prior art to the proposed substitute claims under § 102(e).[44]

[43] In *Google v. CyWee*, CyWee contended that its proposed substitute claims were entitled to an earlier priority date than Withanawasam, based on the conception and diligent reduction to practice of the claimed inventions. *See* IPR2018-01258, Paper 86, at 68. The Board determined that CyWee had provided insufficient corroborating evidence to support that contention. *Id.* at 74.

[44] 35 U.S.C. § 102(e) (2006). *See supra* note 26.

Withanawasam describes "an integrated sensor device" with a "micro-electro-mechanical systems (MEMS) sensor . . . and at least one additional sensor, such as a magnetic sensor." Ex. 1049 ¶¶ 2, 9, code (57). Figure 1 of Withanawasam, reproduced below, is a block diagram of such an integrated device:

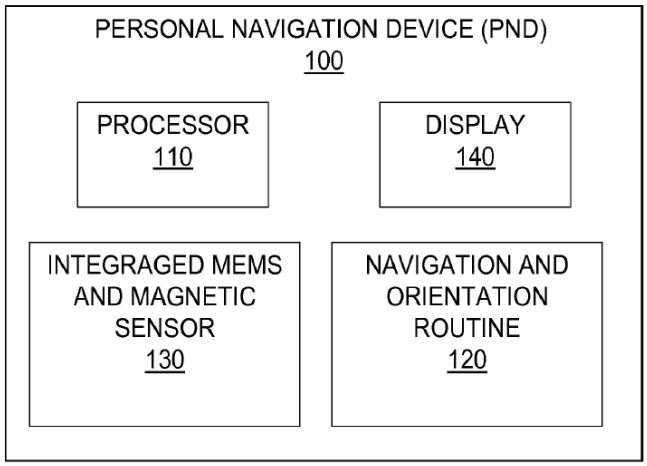

FIG. 1

Figure 1, above, depicts personal navigation device ("PND") 100, "comprising an integrated MEMS and magnetic sensor 130." *Id.* ¶ 11. PND 100 "can be a mobile (hand-held) navigation device, a smart phone, or any similar mobile device configured to aid a user in navigation and applications requiring orientation information." *Id.* The device includes processor 110, which is "configured to run a navigation and orientation routine module 120." *Id.* Display 140 "can comprise a liquid crystal display (LCD), a digital display, or the like," and it presents navigation information that "includes positional information, orientation information, maps, compass directions, a predetermined path, or any other information useful in navigation." *Id.* "The

components of the PND 100 are communicatively coupled to one another as needed using suitable interfaces and interconnects." *Id.* ¶ 12.

Withanawasam states that "orientation information," or in other words, "information relating to the present orientation of the PND 100, . . . can be determined using the integrated MEMS and magnetic sensor 130." Ex. 1049 ¶ 12. Sensor 130 provides information "relating to acceleration, roll and directional data (that is, relating to a compass direction)," and "can use three axes of sensing for acceleration and gyroscope data in one single integrated MEMS sensor." *Id.* Alternatively, the device can comprise "a plurality of integrated MEMS sensors 130, each for a different axis of acceleration or gyroscope data." *Id.*

(b) <u>The Combination of Withanawasam and Bachmann</u>

According to LGE, Withanawasam teaches all the "hardware" recited in proposed substitute claims 20–24, including the recited handheld 3D pointing device with a built-in display and integrated sensors. Opp. RMTA 17. But LGE states that Withanawasam "does not explicitly disclose the mathematical algorithms used with its sensors to output orientation." *Id.* at 17–18. LGE relies on Bachmann to teach the recited algorithm for updating the orientation state in conjunction with Bachmann's nine-axis sensors. *See id.* at 18–22. According to LGE, a person of ordinary skill in the art "would have been motivated to select known sensors and a known method for mathematically fusing sensor data, like Bachmann's, to output orientation values." *Id.* at 18 (citing Ex. 1051 ¶¶ 57–58).

LGE also argues that a person of ordinary skill in the art would have understood that using Bachmann's nine-axis sensor in Withanawasam's

device would result in the following advantages: (i) a person of ordinary skill in the art could "choose sensors and fuse sensor data accurately"; (ii) "Bachmann's sensor [would] allow[] Withanawasam's device to obtain orientation in all rotational degrees of freedom (roll, pitch and yaw)"; and (iii) Bachmann's sensor and fusion method would allow for greater precision and error control because of overdetermination. *Id.* (citing Ex. 1051 ¶¶ 57–58).

LGE also contends that a person of ordinary skill in the art "would have recognized from Bachmann that using [a] quaternion-based filter processing method is computationally more efficient than using spatial (e.g., Euler) angle calculations and avoids singularities that might otherwise occur at certain sensor orientations." *Id.* (citing Ex. 1007, 5:33–7:31; Ex. 1051 ¶ 59).

LGE characterizes this combination of Withanawasam and Bachmann as "nothing more than the combination of known elements (Withanawasam's device plus Bachmann's nine-axis sensor and fusion technique) to achieve an expected improvement (a computationally efficient fusion method of Bachmann)." Opp. RMTA 18; *see also* Ex. 1051 ¶ 59 (Professor Michalson agreeing with the motivation to combine as articulated by Professor Sarrafzadeh, the petitioner's expert in *Google v. CyWee* (citing Ex. 1057 ¶¶ 55–69)).

According to LGE, this combination "would have been achievable by the ordinary skill of a [person of ordinary skill in the art] with a reasonable expectation of success." *Id.* (citing Ex. 1051 ¶ 60). In particular, Professor Michalson notes that Withanawasam's device includes computing hardware sufficient to run its navigation and orientation routine, and opines that

"[t]here is nothing in Withanawasam that would prohibit running a navigation and orientation routine module such as that described by Bachmann. This would merely involve the routine engineering tasks of compiling the software of Bachmann for execution on the processor of Withanawasam." Ex. 1051 ¶ 60.

CyWee does not specifically contest LGE's general arguments, above, as to the combination of Withanawasam and Bachmann. *See* Reply RMTA 10–11. We credit Professor Michalson's testimony and find it persuasive that a person of ordinary skill in the art would have had the knowledge and motivation necessary to implement Bachmann's algorithm on Withanawasam's hardware. We also find Professor Michalson's testimony persuasive that an ordinarily skilled artisan would have been motivated to choose Bachmann's nine axis sensors in implementing Withanawasam's device.

This is consistent with the Board's earlier determination in *Google v. CyWee*, IPR2018-01258, Paper 86 (Final Written Decision), which considered the same prior art combination, as applied to similar claims, and likewise determined that a person of ordinary skill in the art would have had reason to combine Bachmann's algorithm and sensors with Withanawasam's device. *See* Ex. 1056, 76–80, 86.

LGE also addresses the individual limitations of proposed substitute claims 20–24, and we address those arguments in the sections below.

(c) Proposed Substitute Claim 20 (Withanawasam and Bachman)

(1) Preamble

The preamble of proposed substitute claim 20 recites "[a] three-dimensional (3D) pointing device, which is handheld, subject to movements and rotations in dynamic environments." RMTA App'x A, 1. Thus, CyWee's proposed amendment to the preamble requires that the 3D pointing device be "handheld."

LGE contends that Withanawasam's device is handheld. Opp. RMTA 19 (citing Ex. 1049 ¶ 11). CyWee does not contest LGE's argument or otherwise argue that Withanawasam fails to disclose the preamble of claim 20, including the added "handheld" limitation. *See* Reply RMTA 10–11.

We find LGE's argument persuasive. *See* Ex. 1049 ¶ 11 ("The PND 100 can be a mobile (hand-held) navigation device, a smart phone, or any similar mobile device configured to aid a user in navigation and applications requiring orientation information.").[45] Because we find that Withanawasam discloses the preamble, we need not determine whether the preamble is limiting.

(2) Limitations 20(a)–(d)

Limitation 20(a) recites "a single housing associated with said movements and rotations of the 3D pointing device in a spatial pointer reference frame." RMTA App'x A, 1. Limitation 20(b) recites "a single

[45] This proposed preamble is identical to CyWee's proposed preamble amending original claim 1 in *Google v. CyWee*, and the Board likewise found that Withanawasam discloses the preamble. *See* IPR2018-01258, Paper 86, at 81–83.

printed circuit board (PCB) enclosed by the housing." *Id.* Limitations 20(c) and (d) recite "a six-axis motion sensor module attached to the PCB" with a rotation sensor and an accelerometer for measuring rotations and axial accelerations associated with the 3D device's spatial pointer reference frame. *See id.* Limitations 20(c) and (d) are unchanged from original claim 1 and the corresponding limitations that the Board previously addressed in *Google v. CyWee*. *Compare* RMTA App'x. A, 1, *with* Ex. 1001, 18:61–19:3, *and* Ex. 1056, 60. Thus, in the Revised Motion to Amend, the new feature of limitations 20(a)–(d) is that the six-axis sensor module, including the motion sensors, is attached to the device's "single" PCB, which is enclosed by the device's "single" housing.

LGE argues that Withanawasam discloses a single housing enclosing a single PCB. Opp. RMTA 19 (citing Ex. 1049 ¶¶ 1, 10). Alternatively, LGE argues that "Withanawasam's disclosure of a smartphone would have motivated a [person of ordinary skill in the art] to use a single housing to enclose Bachmann's sensor module on a single PCB (as Withanawasam teaches) to avoid a user having to directly touch electronic components." *Id.* (citing Ex. 1051 ¶ 61). LGE also argues that Bachmann teaches using a single nine-axis MARG sensor module, and that a person of ordinary skill in the art would have had reason to mount that sensor module on Withanawasam's single PCB. *Id.*

In response, CyWee argues that "LG[E] makes no attempt to show that *Withanawasam* encloses all these components in a single housing, and contrary to LG[E]'s argument (Paper 62, 19), the mere mention of a 'smartphone' does not teach this requirement." Reply RMTA 10. CyWee also contends that Bachmann "teaches tracking the position of human limbs

relative to each other using multiple sets of sensors in multiple housings. *Id.* at 11.

We find LGE's argument persuasive to show that Withanawasam teaches limitations 20(a)–(d) in light of the teachings in Bachman. Although Withanawasam does not explicitly disclose a single housing, it teaches minimizing the PCB footprint in a packaged device. Ex. 1049 ¶ 10 ("The present integrated MEMS sensor devices . . . reduce the amount of semiconductor substrate material used in the device and concurrently reduce the PCB footprint of the packaged device."). Withanawasam also teaches "[i]ntegrating an accelerometer . . . or a gyroscope and magnetic sensors into a common semiconductor device." *Id.*

Bachmann, likewise, teaches a device with integrated sensors, *see* Ex. 1007, 14:37–59, and we find that a person of ordinary skill in the art would have had reason to choose Bachmann's sensor module for integration onto Withanawasam's PCB. We credit Professor Michalson's testimony that "[i]n the combination with Bachmann, . . . a [person of ordinary skill in the art] would have simply enclosed Bachmann's nine-axis MARG sensor module in the single housing, instead of Withanawasam's integrated MEMS sensor." Ex. 1051 ¶ 61.

We also credit Professor Michalson's testimony that a person of ordinary skill in the art would have understood Withanawasam's disclosure of using the packaged sensor system in a smartphone or other similar mobile navigation device to suggest the use of a single housing. *See* Ex. 1051 ¶ 61. Also, we find his testimony persuasive that an ordinarily skilled artisan would have been motivated to ensure that sensitive electronic components of the smartphone are protected and not in contact with the user's hand. *Id.*

CyWee's argument that Bachmann teaches multiple sets of sensors and multiple housings (Reply RMTA 10) is not persuasive, because LGE relies on the combination of Withanawasam and Bachmann to teach these limitations, not Bachmann alone. *See In re Keller*, 642 F.2d 413, 426 (CCPA 1981) ("[O]ne cannot show non-obviousness by attacking references individually where, as here, the rejections are based on combinations of references.")

Thus, we find that LGE has shown that Withanawasam, in light of Bachmann, teaches limitations 20(a)–(d).

(3) Limitations 20(e)–(g)

Limitations 20(e)–(g) are identical to the limitations in original claim 1 as well as the corresponding limitations that the Board previously addressed in *Google v. CyWee*. *Compare* RMTA App'x. A, 1, *with* Ex. 1001, 19:4–23, *and* Ex. 1056, 60–61. With respect to these limitations, we adopt the Board's prior analysis in *Google v. CyWee*, which also applied the Withanawasam–Bachmann combination to these limitations. *See* Ex. 1056, 80–81. We address LGE's additional arguments below, which CyWee does not specifically contest.

Limitation 20(e) recites, in part, "a data transmitting unit electrically connected to the six-axis motion sensor module for transmitting said first and second signal sets thereof." RMTA App'x A, 1. LGE argues that Withanawasam discloses "communicatively coupling components using 'suitable interfaces and interconnects,'" and that these interfaces and interconnects form the recited data transmitting unit. Opp. RMTA 20 (citing Ex. 1049 ¶ 11; Ex. 1051 ¶ 62).

Limitation 20(e) also recites "a computing processor for receiving and calculating said first and second signal sets from the data transmitting unit." RMTA App'x A, 1. LGE contends that "either the processor 110 of Withanawasam . . . or the processor 403 in Bachmann's Figure 4 would have been used as the recited computing processor in the claims." Opp. RMTA 20 (citing Ex. 1049, Fig. 1, ¶ 11–12).

Limitation 20(f) recites "communicating with the six-axis motion sensor module to calculate a resulting deviation comprising resultant angles in said spatial pointer reference frame." RMTA App'x A, 1. LGE contends that "Bachmann's filtering process yields an 'orientation of the tracked object.'" Opp. RMTA 21 (citing Ex. 1007, 10:10–14). LGE also points to orientation output $\hat{q}$ in Bachmann's Figure 3, which according to LGE "is a quaternion that represents a rotation from the sensor-based coordinate system (the spatial reference frame of claim 1) to a flat-Earth coordinate system." *Id.* LGE contends that "[i]t would have been obvious to convert the orientation output quaternion into Euler angles (roll, pitch, and yaw) to make the underlying orientation information easier to interpret by a human user." *Id.* (citing Ex. 1049 ¶ 11).

Limitation 20(g) recites a comparison between the "first signal set" and the "second signal set" using an update program "to obtain an updated state based on a previous state associated with said first signal set and a measured state associated with said second signal set." RMTA App'x, 1. LGE argues that this comparison is "disclosed by the combination [of Withanawasam and Bachmann] when the correction factor $\dot{q}_{\varepsilon}$ i[n] Bachmann's Figure 3 is formed (steps 34–41). Opp. RMTA 21. We note that

steps 34–41 of Bachmann's Figure 3 include the comparison between $\vec{y}_0$ and $\vec{y}(\hat{q})$ (boxes 34, 35, and 35a). *See supra* part IV.C.5(g).

Regarding the above uncontested arguments by LGE, we credit Professor Michalson's supporting testimony (Ex. 1051 ¶¶ 62–63) and find LGE's arguments persuasive that the combination of Withanawasam and Bachmann teaches limitations 20(e)–(g).

(4) Limitation 20(h)

Limitation 20(h) recites "wherein the measured state includes a measurement of said axial accelerations of said second signal set and a predicted measurement of said axial accelerations of said second signal set obtained based on the first signal set without using any derivatives of the first signal set." RMTA App'x A, 1–2. Thus, CyWee proposes adding limitations requiring that both the "measurement" and "predicted measurement" are "of said axial accelerations of said second signal set."

LGE argues that Bachman teaches this limitation by disclosing "measured axial accelerations in box 34 (which become part of $\bar{y}_0$) and of predicted or calculated axial accelerations in the quaternion $\bar{y}(\hat{q})$, which is sufficient to meet limitation 20(h)." Opp. RMTA 21 (citing Ex. 1030 ¶¶ 97–99). LGE contends that "[t]he measured state[] includes measured and predicted acceleration data, but that measured state need not be included in one parameter." *Id.* at 21–22 (citing Ex. 1051 ¶ 64).

In response, CyWee argues that Bachmann does not teach a measured state that includes *both* the recited "measurement" of axial accelerations and the "predicted measurement" of axial accelerations based on the angular velocities (the first signal set). Reply RMTA 11; *see also* RMTA 17–18. According to CyWee, box 34 in Bachmann's Figure 3, which LGE contends

are the axial accelerations (second signal set) "cannot possibly output a predicted measurement based on the first signal set (angular velocities) because angular velocities are not input to box 34 or listed within box 34." Reply RMTA 11. CyWee also disagrees that the elements of vector $\bar{y}(\hat{q})$ are the claimed "predicted measurements" because "(i) *Bachmann* does not describe $\bar{y}(\hat{q})$ as predicted measurements and (ii) $\bar{y}(\hat{q})$ is not part of box 34" which LGE alleges is the recited "measured state." *Id.* (citing Opp. RMTA, 17; RMTA, 18–19). Rather, "$\bar{y}(\hat{q})$ is on the opposite side of the operation at the top of FIG. 3 than the alleged measured state at box 34." *Id.* (citing RMTA, 18–19). CyWee raised essentially the same arguments above in the context of original claim limitation 1(n) above. *See supra* part IV.C.5(k).

We agree with LGE that, as recited in original claim 1 and proposed substitute claim 20, there is no requirement that the "measured state" exist as a single parameter such as $\bar{y}_0$ in box 34 of Bachman's Figure 3. LGE identifies the "measured state" as the *combination* of $\bar{y}_0$ and $\bar{y}(\hat{q})$ (boxes 34 and 35a). *See* Sur-Reply RMTA 9–10 (citing Ex. 1051 ¶¶ 64, 66).

As a matter of claim construction, the evidence of record suggests that a person of ordinary skill in the art reading the '438 patent as a whole would have understood that the "measurement" of axial accelerations and the "predicted measurement" of axial accelerations can be two distinct sets of parameters. When describing the "measured state" of the six-axis motion sensor module referenced in steps 725 and 730 of Figure 7 of the '438 patent, the inventors identify "measured axial accelerations Ax, Ay, Az" which are obtained from the second signal set, and a distinct set of "predicted axial accelerations Ax′, Ay′, Az′," which are calculated from the

measured angular velocities (i.e., the first signal set). *See* Ex. 1001, 12:61–13:13.

Measured axial accelerations Ax, Ay, Az are analogous to Bachmann's measurement vector $\bar{y}_0$,[46] both of which correspond to the "measurement of said axial accelerations of said second signal set" recited in limitation 20(h). Predicted axial accelerations Ax′, Ay′, Az′ are analogous to Bachman's computed measurement vector $\bar{y}(\hat{q})$,[47] both of which correspond to the "predicted measurement of said axial accelerations of said second signal set obtained based on the first signal set" recited in limitation 20(h).

We also find CyWee's argument that Bachmann "does not describe $\bar{y}(\hat{q})$ as predicted measurements" unconvincing. Reply RMTA 11. Bachmann describes $\bar{y}(\hat{q})$ as a "computed measurement vector," and as "a vector to be fitted to" the measured data points in vector $\bar{y}_0$. Ex. 1007, 9:2, 9:34–35. We find that a person of ordinary skill in the art would have understood this to teach that $\bar{y}(\hat{q})$ is a predicted measurement of axial accelerations. Like $\bar{y}(\hat{q})$ in Bachmann, predicted axial accelerations Ax′, Ay′, and Az′ in the '438 patent are "calculated based on the . . . current state or quaternion in relation to the measured angular velocities." Ex. 1001, 13:11–13.

---

[46] Measurement vector $\bar{y}_0$ contains, among other things, measured axial accelerations h_1, h_2, h_3. *See* Ex. 1007, 8:47–50, Fig. 3 box 34.

[47] Computed measurement vector $\bar{y}(\hat{q})$ contains, among other things, estimated axial accelerations h_1, h_2, h_3 which are calculated from the equation $h = \hat{q}^{-1} m \hat{q}$, where $\hat{q}$ is the estimated orientation quaternion and m is a unit vector in quaternion form representing gravity. *See* Ex. 1007, 7:60–61, 8:52–55, 8:63–9:8, 10:13–14, Fig. 3 box 35.

Accordingly, we determine that LGE has shown that the combination of Withanawasam and Bachmann teaches limitation 20(h).

(5) Limitation 20(i)

Limitation 20(i) recites "a display device built-in to and integrated with the 3D pointing device and associated with a display reference frame, wherein said resultant angles of the resulting deviation in the spatial pointer reference frame are translated to a movement pattern in the display reference frame." RMTA App'x A, 2. This limitation is identical to a corresponding proposed limitation that the Board considered in *Google v. CyWee*. *See* IPR2018-01258, Paper 86, at 61, 83–85. In that case, the Board determined that the Bachmann–Withanawasam combination teaches a built-in display device and the other requirements of limitation 20(i). *See id.* at 83–85.

LGE, likewise, argues that Withanawasam "includes a built-in display with its own display reference frame per 20(i)." Opp. RMTA 19 (citing Ex. 1049 ¶¶ 1, 11–12).

In response, CyWee contends that Withanawasam "discloses a display device but does not disclose that the display device is 'built-in to and integrated' with a pointing device." Reply RMTA 10 (citing Ex. 1049 ¶¶ 11–12). Rather, CyWee argues that Withanawasam's display device "is merely identified as a component in a block diagram . . . ; it is not described as 'built-in' to a pointing device. Indeed, Withanawasam makes no mention of a pointing device." *Id.* (citing Ex. 1049 ¶¶ 11–12, Fig. 1).

We find LGE's argument persuasive. As LGE notes, CyWee argued in its original Motion to Amend, based on supporting testimony of Professor LaViola, that a person of ordinary skill in the art "would understand that a smartphone is a device with a 'built-in display . . . integrated on the

housing.'" Paper 19, 11 (citing Ex. 2015 ¶ 43). Withanawasam teaches that its disclosed device can be "a smart phone[] or any similar mobile device configured to aid a user in navigation and applications requiring orientation information." Ex. 1049 ¶ 11. This is sufficient to disclose a built-in display that is integrated on the housing.

As the Board found in *Google v. CyWee*, we also find that in Withanawasam's device as modified by Bachmann, the "resultant angles of the resulting deviation in the spatial pointer reference frame" would be "translated to a movement pattern in the display reference frame." *See* IPR2018-01258, Paper 86, at 84–85. Thus, we determine that LGE has shown that the combination of Withanawasam and Bachmann teaches limitation 20(i).

In light of the above considerations, we conclude that LGE shows, by a preponderance of the evidence, that proposed substitute claim 20 is unpatentable under 35 U.S.C. § 103(a) as obvious over Withanawasam in view of Bachmann.

(d) Proposed Substitute Claim 21 (Withanawasam and Bachman)

Proposed substitute claim 21, intended to replace original claim 5, requires that the "data transmitting unit" is attached to the PCB "and transmits said first and second signal of the six-axis motion sensor module to the computing processor via electronic connections on the PCB." RMTA, App'x A, 2. The claim also adds the limitation "wherein the 3D pointing device is a cellular phone." *Id.*

LGE argues that "Withanawasam teaches that its device could be a 'smartphone,' which is a 'cellular phone.' Thus, the new feature of claim 21

is disclosed by the Withanawasam–Bachman combination." Opp. RMTA 22 (citing Ex. 1051 ¶ 65). CyWee does not specifically respond to this argument. *See* Reply RMTA 10–11.

We find LGE's argument persuasive. We also credit Professor Michalson's testimony that Withanawasam's single PCB would include "suitable interfaces and interconnects" that would "form a data transmitting unit electrically connected to the six-axis motion sensor module for transmitting said first and second signal sets thereof." Ex. 1051 ¶ 62 (quoting Ex. 1049 ¶ 11). Thus, we conclude that LGE shows, by a preponderance of the evidence, that proposed substitute claim 21 is unpatentable under 35 U.S.C. § 103(a) as obvious over Withanawasam in view of Bachmann.

(e) Proposed Substitute Claim 22 (Withanawasam and Bachman)

Proposed substitute claim 22 is essentially the same as original claim 14 except for some additional limitations in the preamble, and it remains unchanged from the proposed substitute claim 22 that CyWee submitted as part of its original Motion to Amend. *Compare* RMTA App'x A, 2–3, *with* Ex. 1001, 21:8–45, *and* MTA App'x A, 2–3.

The preamble of proposed substitute claim 22 describes hardware essentially the same as that recited in limitations 20(a)–(b), (c), and (i), including the requirements that the sensor module is attached to a single PCB, that there is a single housing, and that there is a built-in display device integrated with the 3D pointing device and associated with a display reference frame. *See* RMTA App'x A, 2.

LGE argues that proposed substitute claim 22 "recites limitations that are generally coextensive in scope with those in claim 20," and LGE relies on the testimony of Mr. Andrews supporting ZTE's Opposition to CyWee's Motion to Amend. Opp. MTA 22. According to LGE, "Mr. Andrews has already explained how Bachmann also discloses any differences between [proposed substitute claims 22 and 20]." *Id.* (citing Ex. 1030 ¶¶ 102–10). We discuss ZTE's position as to original claims 14 and 19 above, based on Mr. Andrews's testimony, and we find it persuasive. *See supra* part IV.C.5(n). As we understand this testimony, Mr. Andrews identifies the first and third quaternions as estimated orientation quaternions $\hat{q}$ taken at times $T - 1$ and T, respectively. *See* Ex. 1030 ¶ 102.

According to LGE, Professor Michalson agrees with Mr. Andrews's testimony *Id.* (citing Ex. 1051 ¶¶ 66–68). However, Professor Michalson also offers a slightly modified interpretation of Bachmann's Figure 3, which he illustrated in an annotated version of Figure 3, reproduced below:

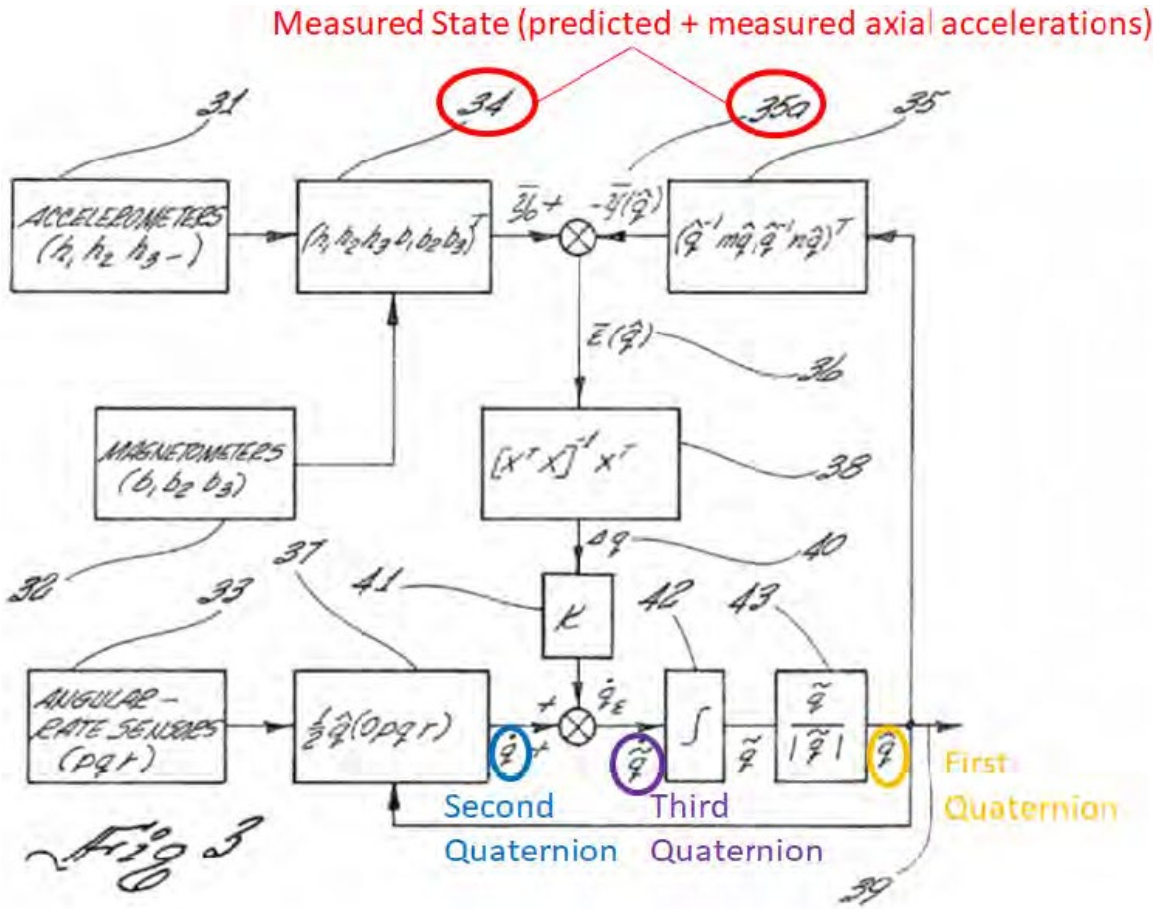

Ex. 1051 ¶ 66. Professor Michalson's annotated version of Bachmann's Figure 3, above, includes the label "Measured State (predicted + measured axial accelerations)" with lines pointing to boxes 34 and 35a. The figure also identifies what Professor Michalson identifies as the "first," "second," and "third" quaternions. In Professor Michalson's view, the first quaternion, representing the "previous state" recited in limitation 22(a), is the vector $\hat{q}$. Ex. 1051 ¶ 67 (citing Ex. 1030 ¶ 102). He opines that the second quaternion, representing the "current state" recited in limitation 22(b), is the value $\dot{q}$ in Figure 3 box 37. In his view, the third quaternion, representing the "updated state" recited in limitation 22(g), is corrected rate quaternion $\dot{\tilde{q}}$.

CyWee does not specifically respond to LGE's arguments regarding proposed substitute claim 22. *See* Reply RMTA 10–11. We note, however,

that Professor Michalson's interpretation of Figure 3 differs from that of Mr. Andrews, in that whereas Mr. Andrews identifies the third quaternion as estimated orientation quaternion $\hat{q}$ taken at time T, Professor Michalson identifies the third quaternion as corrected rate quaternion $\dot{\tilde{q}}$.

We do not consider Professor Michalson's testimony to contradict that of Mr. Andrews, because both interpretations of the "updated state" are consistent with the language of original claim 14 and proposed substitute claim 22. Either corrected rate quaternion $\dot{\tilde{q}}$ or estimated orientation quaternion $\hat{q}$ may be considered the "updated state" because they both occur in Figure 3 at a point *after* rate quaternion $\dot{q}$ has been updated based on the previous state ($\hat{q}$ at time $T-1$) and the measured state ($\bar{y}_0$ and $\bar{y}(\hat{q})$) via correction factor $\dot{q}_\varepsilon$.

In sum, we find LGE's argument persuasive, and we credit the testimony of Mr. Anderson and Professor Michalson. Thus, we conclude that LGE shows, by a preponderance of the evidence, that proposed substitute claim 22 is unpatentable under 35 U.S.C. § 103(a) as obvious over Withanawasam in view of Bachmann.

3. Obviousness of Proposed Substitute Claims 23 and 24 over Withanawasam, Bachmann, and Bachmann2

LGE contends that proposed substitute claims 23 and 24 are unpatentable under 35 U.S.C. § 103(a) for obviousness over Withanawasam in view of Bachmann and Bachmann2. Opp. RMTA 15–18, 22–23. For the reasons below, we determine that a preponderance of the evidence supports LGE's contention. After providing an overview of Bachmann2, we discuss the evidence as it relates to proposed substitute claims 23 and 24, with

particular emphasis on the differences between these claims and proposed substitute claims 20–22, which we address above.

(a) Overview of Bachmann2

ZTE introduced Bachmann2 in its Opposition to CyWee's original Motion to Amend, and alleged that it was published in 2001 as part of the 2001 IEEE/RSJ International Conference on Intelligent Robots and Systems, in Maui, Hawaii, between October 29 and November 3, 2001. Paper 34, 10 & n.1. According to ZTE, it is prior art under 35 U.S.C. §102(b). *Id.* at 10.

CyWee does not contest that Bachmann2 is prior art to the '438 patent. The paper itself bears indicia that it is a 2001 publication, including an ISBN and copyright line that reads "0-7803-6612-3/01/$10.00©2001 IEEE," appearing to indicate that it was assigned an ISBN number and that it was published in 2001 by the IEEE. Therefore, we conclude that Bachmann2 is a printed publication and is prior art to the '438 patent under § 102(b).

Bachmann2 relates to the MARG sensors described in Bachmann, but replaces Bachmann's "complementary" filter with an extended Kalman filter. Ex. 1032, 2003 ("This paper presents an extended Kalman filter for real-time estimation of rigid body orientation using the newly developed MARG . . . sensors."), 2004 ("This paper follows the same approach as [a paper related to the Bachmann reference], but replaces the complementary filter with a Kalman filter.").

As background, a different paper by CyWee's expert Professor LaViola describes an extended Kalman filter as "a set of mathematical equations which uses an underlying process model to make an estimate of the current state of a system and then corrects the estimate using any available sensor measurement." Ex. 1046, 2435–36; *see also* Ex. 1048,

65:1–5 (Professor LaViola testifying that the extended Kalman filter in his paper "had an underlying process model that describes the relationship between quaternions and angular velocity"); *id.* at 66:4–7 ("[I]n the context of an [extended Kalman filter] you sort of have the state transition which . . . describes how the underlying process model behaves.").

Bachmann2 describes two alternative approaches for using an extended Kalman filter, which share a common process model. *See* Ex. 1032, 2005–06, 2008. This process model is illustrated graphically in Figure 2, reproduced below:

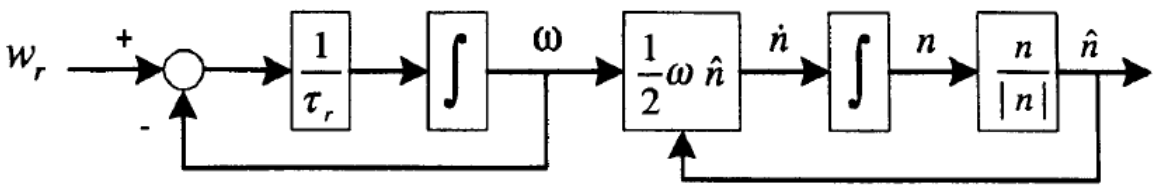

Figure 2. Process Model for Angular Rates and Quaternions.

Figure 2 of Bachmann2, captioned "Process Model for Angular Rates and Quaternions," depicts a process "model of a rigid body for the purpose of estimating its rotational motions." Ex. 1032, 2005. The model has a feedback loop on the left, and another feedback loop on the right. *See id.* at 2004, Fig. 1 (depicting the loop on the left separately). The loop on the left is "a simple first order model for the angular rate" ω defined in terms of roll, pitch, and yaw. *Id.* at 2004–05, Fig. 1. The feedback loop on the right of Figure 2 indicates that angular rate ω is converted to rate quaternion $\dot{n}$, which is integrated and then normalized to form orientation quaternion $\hat{n}$, which is also fed back into the calculation for rate quaternion $\dot{n}$. *See id.* at 2005.

The above process model includes seven state variables: the three angular rates in vector ω representing roll, pitch, and yaw, and the four

quaternion components of normalized orientation quaternion $\hat{n}$. Ex. 1032, 2005–06 (labeling the seven variables as x_1–x_7).

The first of Bachmann2's alternative approaches uses a standard extended Kalman filter "which has seven states (3-dimensional angular rates, and 4-dimensional quaternion), and nine outputs (nine measurements directly from the MARG sensor)." Ex. 1032, 2005. Writing from the perspective of its 2001 publication, Bachmann2 states that this approach was "difficult to implement in real time" because of its complexity, given that "a minimum of fifteen MARG sensors are needed to fully track one avatar, not to mention simultaneous tracking of multiple avatars in a virtual environment." *Id.* at 2005–06.

To overcome this computational complexity, Bachmann2's second approach "uses the Gauss-Newton iteration algorithm to find the best matched quaternion for each measurement from the accelerometers and magnetometers," and the resulting computed quaternion "is taken as part of measurements for the Kalman filter, in addition to the measurements provided by the angular rate sensor." Ex. 1032, 2005. In other words, the second approach fits a quaternion to the measured accelerometer and magnetometer measurement data and uses its four quaternion components as "measurements" in addition to the three angular rate measurements. Thus, the measurement "outputs are exactly the same as the states." *Id.* at 2008.

As a result, the second approach is able to simplify the extended Kalman filter because "the outputs of the Kalman filter are reduced from nine to seven," and "the output equations become linear." Ex. 1032, 2005. "[S]ince part of the state equations is nonlinear," the second approach still uses an extended Kalman filter, but "linearity in the output equations

significantly simplifies the filter design and reduces the computational requirements for real-time implementation." *Id.* at 2008.

(b) Proposed Substitute Claim 23

Proposed substitute claim 23 is intended to replace original claim 15, which depends from claim 14. *See* RMTA App'x A, 3. As with claim 15, proposed substitute claim 23 recites a method that further comprises "outputting the updated state of the six-axis motion sensor module to the previous state of the six-axis motion sensor module." *Compare id.*, *with* Ex. 1001, 21:48–50. Also, "said resultant angles of the resulting deviation includes yaw, pitch and roll angles about each of three orthogonal coordinate axes of the spatial pointer reference frame." *Compare* RMTA App'x A, 3, *with* Ex. 1001, 21:50–53. We addressed these limitations above in the context of whether the Yamashita–Bachmann combination would have rendered original claim 15 obvious, and we found that Bachmann teaches these limitations. *See supra* part IV.C.5(o).

In addition, proposed substitute claim 23 requires that "said angular velocities ω_x, ω_y, ω_z and said second quaternion are represented by at least one Extended Kalman Filter [EKF] equation; and the step of using at least one Jacobian to linearize said measured state." RMTA App'x, 3.

As we discuss above, Bachmann teaches a sensor fusion algorithm that uses Gauss-Newton iteration as a filter to minimize the error between measured and predicted axial accelerations. *See supra* part IV.C.2. LGE contends that a person of ordinary skill in the art "would have been motivated to use *other* filtering embodiments, including extended Kalman filters, with the Withanawasam–Bachman combination, because Bachmann expressly motivates such uses." Opp. RMTA 22 (emphasis added) (citing

Ex. 1007, 9:37–40 ("Alternatively, other filtering embodiments can be employed including, but not limited to . . . Kalman filters."), 17:60–62 ("Also, the inventors contemplate other filtering embodiments including, but not limited to . . . Kalman filters.")); *see also* Paper 34, 20 (ZTE arguing in its Opposition to the original Motion to Amend that "Bachmann discloses using a Gauss-Newton iteration to minimize the error between predicted axial accelerations and the measured axial accelerations," but also teaches Kalman filters as an alternative implementation (citing Ex. 1007, 9:9–45)).

Bachmann itself does not refer to an *extended* Kalman filter, so LGE relies on Bachmann2. *See* Ex. 1051 ¶ 69 (Professor Michalson testifying that "[t]he Bachmann reference . . . describes a linear Kalman filter model, but Bachmann expressly discloses the possibility of 'other filtering embodiments' [such as an extended Kalman filter]" (citing Ex. 1007, 17:60–62)).

ZTE, likewise, relied on Bachmann2 for essentially the same reasons in its Opposition to the original Motion to Amend. *See* Paper 34, 10–14, 20–22. According to ZTE, Bachmann2 "provides a detailed mathematical description of two different approaches to using an extended Kalman Filter to generate an updated state quaternion based on the previous state quaternion." *Id.* at 21.

As LGE elaborates on ZTE's argument, "[i]n its Figure 2, Bachmann2 discloses an EKF equation that includes both angular velocities and a second quaternion (n)." Opp. RMTA 23 (Ex. 1032, 3). According to LGE, proposed substitute claim 23 "do[es] not require any operations performed with the newly[ ]recited EKF equation. Thus, Bachmann2's disclosure of the recited EKF equation is sufficient." *Id.* (Ex. 1051 ¶¶ 69–71). Thus, LGE regards the

process model equation represented in Bachmann2's Figure 2 to be an extended Kalman filter equation as recited in proposed substitute claim 23.

Regarding the requirement in proposed substitute claim 23 that the method perform "the step of using at least one Jacobian to linearize said measured state," LGE states that "Bachmann2 also discloses use of a Jacobian to linearize a measured state." Opp. RMTA 23 (citing Ex. 1032, 5).

CyWee does not specifically contest LGE's arguments regarding claim 23, or ZTE's prior arguments on which LGE relies. We find those arguments persuasive, both (1) as to using at least one extended Kalman filter equation, and (2) as to using a Jacobian to linearize the measured state. We discuss both points below.

(1) Representing Angular Velocities and the Second Quaternion by an Extended Kalman Filter Equation

First, we find persuasive LGE's argument that the process model in Bachmann2's Figure 2 represents an extended Kalman filter equation representing the angular velocities and the second quaternion.

That the extended Kalman filter equations include a process model is consistent with the teachings in the '438 patent. In deposition, Professor LaViola testified that the "standard extended Kalman filter equations" include "the process model and the appropriate covariance matrix and . . . the measurement model and the appropriate covariance matrix for that. And in each case you have the Jacobian." Ex. 1048, 102:10–21. He also testified that in the '438 patent, "[t]he process model is defined in equation 5." *Id.* at 103:20–21. Consistent with this, CyWee argues in its Revised Motion to Amend that in the '438 patent, "a [person of ordinary skill] viewing the

exemplary equations (5) through (10) of the comparison method utilized by the invention would know that they are EKF equations." RMTA 12; *see also* Paper 19, 12 (same); Ex. 2021 ¶ 46 ("I explained in detail at my deposition that 'the equations [including equation 5] in ['the 438 patent's] specification are extended Kalman filter equations." (first alteration in original)).

Specifically as it relates to proposed substitute claim 23, Professor LaViola testified that process model equations 1 and 5 are the only extended Kalman filter equations in the '438 patent that represent angular velocities and the second quaternion. Ex. 1048, 237:6–16. Thus, the record is clear that a person of ordinary skill in the art would have understood a process model equation such as equation 1 or 5 to be "at least one Extended Kalman Filter equation" that represents "said angular velocities $\omega_x, \omega_y, \omega_z$ and said second quaternion" as recited in proposed substitute claim 23. RMTA App'x A, 3.

The evidence of record shows that Bachmann2's process model, shown graphically in Bachmann2's Figure 2, is such an extended Kalman filter equation. Like equations 1 and 5 of the '438 patent, Bachmann2's process model includes angular rate ω of the rigid body, which is defined by angular velocities around the x, y, and z axes. *See* Ex. 1032, 2004. Also like equations 1 and 5, Bachmann2's process model includes "parameters for characterizing orientation, in this case, quaternion n" which corresponds to the "second quaternion" in proposed substitute claim 23. *Id.* at 2004–05. Thus, we agree with LGE that the process model in Bachmann2 includes angular velocities and a "second quaternion" representing the current state of the rigid body.

Because of the overall similarity between the algorithms in Bachmann and Bachmann2, and because Bachmann suggests the use of Kalman filters,

we credit Professor Michalson's testimony that "implementation of Bachmann2 [in the combination of Withanawasam–Bachmann] is nothing more than a routine engineering task that falls well[ ]within the capabilities of a [person of ordinary skill in the art]." Ex. 1051 ¶ 69. We also find persuasive Professor Michalson's testimony that a person of ordinary skill in the art would have looked to an extended Kalman filter precisely because Bachmann2's process model is nonlinear. *See id.*

Thus, based on the record before us, we find that a person of ordinary skill in the art would have had the motivation and technical ability to modify the Withanawasam–Bachmann combination by incorporating an extended Kalman filter based on the teachings of Bachmann2.

(2) Using a Jacobian to Linearize the Measured State

We agree with LGE that Bachmann2 describes, at least as part of its "second approach," the use of a Jacobian to linearize a measured state. *See* Opp. RMTA 23 (citing Ex. 1032, 2007).[48] Like Bachmann, Bachmann2 teaches using a Gauss-Newton algorithm to minimize an error function. *See* Ex. 1032, 2006–08. Bachmann2 does this to minimize the error between y_0 (comprising the "measured" components of gravity and the earth's magnetic field derived from accelerometers and magnetometers) and y_1 (comprising

[48] Professor LaViola also testifies that a standard extended Kalman filter includes a measurement model and "the Jacobian, which linearizes the nonlinear function that is being represented by the underlying model." Ex. 1048, 102:10–24. Thus his testimony, which we find persuasive, suggests that even without an explicit disclosure of a Jacobian, Bachmann2's use of a standard extended Kalman filter would necessarily include at least one Jacobian to linearize the measured state.

"known" components of gravity and the earth's magnetic field, which are constant in a given geographic area). *Id.* at 2007. Bachmann2 explains that the Gauss-Newton algorithm involves using a Jacobian matrix (J in equation 23). *Id.*[49] Thus, we find that LGE has shown that Bachmann2 teaches using at least one Jacobian to linearize the measured state in the combination of Withanawasam and Bachmann.

In sum, we find that a person of ordinary skill in the art would have had reason combine the teachings of Withanawasam, Bachmann, and Bachmann2 such that "said angular velocities ω_x, ω_y, ω_z and said second quaternion are represented by at least one Extended Kalman Filter equation; and the step of using at least one Jacobian to linearize said measured state," as recited in proposed substitute claim 23. Thus, we conclude that LGE has shown, by a preponderance of the evidence, that proposed substitute claim 23 is unpatentable under 35 U.S.C. § 103(a) as obvious over Withanawasam in view of Bachmann and Bachmann2.

(c) Proposed Substitute Claim 24

Proposed substitute claim 24 is intended to replace independent original claim 19. *See* RMTA App'x A, 3. Claim 19 is virtually identical to claim 14, but CyWee intends the proposed claim 24 amendments to "contain[] all of the clarifications and limitations of the preceding Proposed Contingent Claims." RMTA 2. These proposed amendments are found in the preamble 24(Pre) and limitations 24(d) and 24(h). *See id.* App'x A, 3–5. This

[49] Like Bachmann2, Bachmann uses a Gauss-Newton algorithm to minimize the error between vectors $\bar{y}_0$ and $\bar{y}(\hat{q})$ in box 38 of Bachmann's Figure 3. *See* Ex. 1007, 9:9–43, Fig. 3. However, Bachmann does not explicitly state that this iteration involves using a Jacobian.

includes the requirement of "utilizing at least one Extended Kalman Filter equation," that the motion sensor module is "attached to a single PCB," that "the 3D pointing device comprises a cellular phone with a display device built-in to and integrated with the 3D pointing device and associated with a display reference frame," that "said measured angular velocities ω_x, ω_y, ω_z and said second quaternion are represented by at least one Extended Kalman Filter equation; and at least one Jacobian is used to linearize said measured state," and a step of "translating said resultant angles of the resulting deviation to a movement pattern in the display reference frame." *Id.* at 3–5.

We discuss each of these limitations in the preceding sections as they appear in proposed substitute claims 20–23, and we determine that a person of ordinary skill in the art would have had reason to modify Withanawasam to practice each of these limitations, based on the teachings of Bachman and Bachamann2. *See supra* parts V.D.2, V.D.3(b).

Thus, we conclude that LGE shows, by a preponderance of the evidence, that proposed substitute claim 24 is unpatentable under 35 U.S.C. § 103(a) as obvious over Withanawasam in view of Bachmann and Bachmann2.

4. Obviousness of Proposed Substitute Claims 20–24 over Yamamoto, Bachmann, and Bachmann2

Alternatively to the proposed combinations based on Withanawasam, LGE argues that proposed substitute claims 20–22 are unpatentable under 35 U.S.C. § 103(a) for obviousness over Yamamoto in view of Bachmann, and that proposed claims 23 and 24 are unpatentable over as obvious over Yamamoto in view of Bachmann and Bachmann2. Opp. RMTA 23.

CyWee argues that "LG[E] makes no attempt to show that *Yamamoto* encloses all the components that are recited in the claims in a single housing," or that Yamamoto meets "other limitations recited in claims 20–24," including 20(c)–(i), 21, 22(Pre)–22(g), and 23. Reply RMTA 12.

Responding to this in the Sur-Reply, LGE argues that "[t]he Opposition . . . relies on Dr. Michalson's analysis in paragraphs 72–83 of Ex. 1051, which is briefly summarized here [in the Sur-Reply]." Sur-Reply RMTA 10–11.

We agree with CyWee that LGE's analysis in its Opposition to the Revised Motion to Amend is insufficiently specific. It spans less than a page, and LGE does not conduct a claim-by-claim analysis. As CyWee correctly points out, LGE also omits discussion of several claim limitations. LGE's reliance on twelve paragraphs of Professor Michalson's expert report is also improper under our rules. *See* 37 C.F.R. § 42.6(a)(3) (2019) ("Arguments must not be incorporated by reference from one document into another document."). LGE's attempt to summarize Professor Michalson's testimony in its Sur-Reply comes too late, given that CyWee was not afforded an opportunity to respond.

Thus, we determine that LGE has not met its burden to provide specific arguments for why it contends the proposed substitute claims are unpatentable over Yamamoto in view of Bachmann and Bachmann2. *See Magnum Oil Tools*, 829 F.3d at 1380 ("To satisfy its burden of proving obviousness, a petitioner cannot employ mere conclusory statements. The petitioner must instead articulate specific reasoning, based on evidence of record, to support the legal conclusion of obviousness." (citing *KSR*, 550 U.S. 398 at 418)).

E. CONCLUSION

Because proposed substitute claims 21 and 24 contain new matter, and because LGE sufficiently shows that proposed substitute claims 20–24 are unpatentable for obviousness over the combination of Withanawasam, Bachmann, and Bachmann2, we deny CyWee's Revised Motion to Amend.

VI. CONCLUSION

For the reasons above, ZTE has shown by a preponderance of the evidence that the challenged claims of the '438 patent are unpatentable, as summarized in the following table:

Claims	35 U.S.C. §	Reference(s)/ Basis	Claims Shown Unpatentable	Claims Not shown Unpatentable
1, 4, 5, 14–17, 19	103(a)	Yamashita, Bachmann	1, 4, 5, 14–17, 19	
1, 4, 5, 14–17, 19	103(a)	Nasiri, Sachs, Song		1, 4, 5, 14–17, 19
Overall Outcome			1, 4, 5, 14–17, 19	

The table below summarizes our conclusions as to CyWee's Revised Motion to Amend the claims:[50]

Motion to Amend Outcome	Claim(s)
Original Claims Cancelled by Amendment	
Substitute Claims Proposed in the Amendment	20–24
Substitute Claims: Motion to Amend Granted	
Substitute Claims: Motion to Amend Denied	20–24
Substitute Claims: Not Reached	

[50] Should CyWee wish to pursue amendment of the challenged claims in a reissue or reexamination proceeding subsequent to the issuance of this decision, we draw CyWee's attention to the April 2019 *Notice Regarding*

VII. ORDER

In consideration of the foregoing, it is

ORDERED that claims 1, 4, 5, 14–17, 19 of the ’438 patent are unpatentable;

FURTHER ORDERED that CyWee’s Revised Motion to Amend (Paper 38) is *denied*;

FURTHER ORDERED that CyWee’s Motion to Exclude (Paper 66) is *denied*;

FURTHER ORDERED that CyWee’s objections to LGE’s demonstrative exhibits (Paper 80) are *overruled*;

FURTHER ORDERED that LGE’s objections to CyWee’s (Paper 78) demonstrative exhibits are *overruled*; and

FURTHER ORDERED that parties to this proceeding seeking judicial review of our decision must comply with the notice and service requirements of 37 C.F.R. § 90.2.

Options for Amendments by Patent Owner Through Reissue or Reexamination During a Pending AIA Trial Proceeding. See 84 Fed. Reg. 16,654 (Apr. 22, 2019). If CyWee chooses to file a reissue application or a request for reexamination of the challenged patent, we remind CyWee of its continuing obligation to notify the Board of any such related matters in updated mandatory notices. *See* 37 C.F.R. § 42.8(a)(3), (b)(2).

For PETITIONER:

Dion Bregman
Alexander Stein
Collin Park
Andrew Devkar
Jeremy Peterson
Adam Brooke
Howard Wisnia
Steve Moore
dion.bregman@morganlewis.com
alexander.stein@morganlewis.com
collin.park@morganlewis.com
andrew.devkar@morganlewis.com
jeremy.peterson@pvuslaw.com
adam.brooke@morganlewis.com
howard@wisnialaw.com
stevemoore@zhonglun.com

For PATENT OWNER:

Jay Kesan
jay@jaykesan.com