US 20180064453A1

(19) United States

(12) Patent Application Publication

(10) Pub. No.: US 2018/0064453 A1

(43) Pub. Date: Mar. 8, 2018

Garrison et al.

(54) **RAPID ASPIRATION THROMBECTOMY SYSTEM AND METHOD**

(71) Applicant: **Route 92 Medical, Inc.**, San Mateo, CA (US)

(72) Inventors: **Michi E. Garrison**, San Mateo, CA (US); **Tony M. Chou**, San Mateo, CA (US); **Scott D. Wilson**, San Mateo, CA (US)

(21) Appl. No.: **15/805,673**

(22) Filed: **Nov. 7, 2017**

Related U.S. Application Data

(63) Continuation of application No. 15/015,799, filed on Feb. 4, 2016, now Pat. No. 9,820,761.

(60) Provisional application No. 62/142,637, filed on Apr. 3, 2015, provisional application No. 62/111,841, filed on Feb. 4, 2015.

Publication Classification

(51) **Int. Cl.**

A61B 17/22	(2006.01)
A61M 25/00	(2006.01)
A61M 1/00	(2006.01)
A61M 5/00	(2006.01)
A61B 17/221	(2006.01)
A61M 25/01	(2006.01)
A61M 25/10	(2013.01)

(52) **U.S. Cl.**

CPC ***A61B 17/22*** (2013.01); ***A61M 25/0054*** (2013.01); ***A61M 1/008*** (2013.01); ***A61M 5/007*** (2013.01); ***A61B 17/221*** (2013.01); ***A61M 25/0067*** (2013.01); *A61M 2210/12* (2013.01); ***A61M 25/10*** (2013.01); *A61B 2017/22038* (2013.01); *A61B 2017/22079* (2013.01); *A61B 2017/2212* (2013.01); *A61M 2025/1084* (2013.01); *A61M 2210/0693* (2013.01); ***A61M 25/0108*** (2013.01)

(57) **ABSTRACT**

An intravascular access system for facilitation of intraluminal medical procedures within the neurovasculature through an access sheath. The system includes an aspiration or support catheter having a flexible, distal luminal portion having an inner diameter defining a lumen extending between a proximal opening at a proximal end of the luminal portion and a distal opening at a distal end of the luminal portion. The catheter has a rigid spine coupled to at least the proximal end of the luminal portion and extending proximally therefrom. The system includes a dilator having a flexible, distal dilator portion sized to be received within the lumen of the luminal portion. Associated systems, devices, and methods of use are also described.

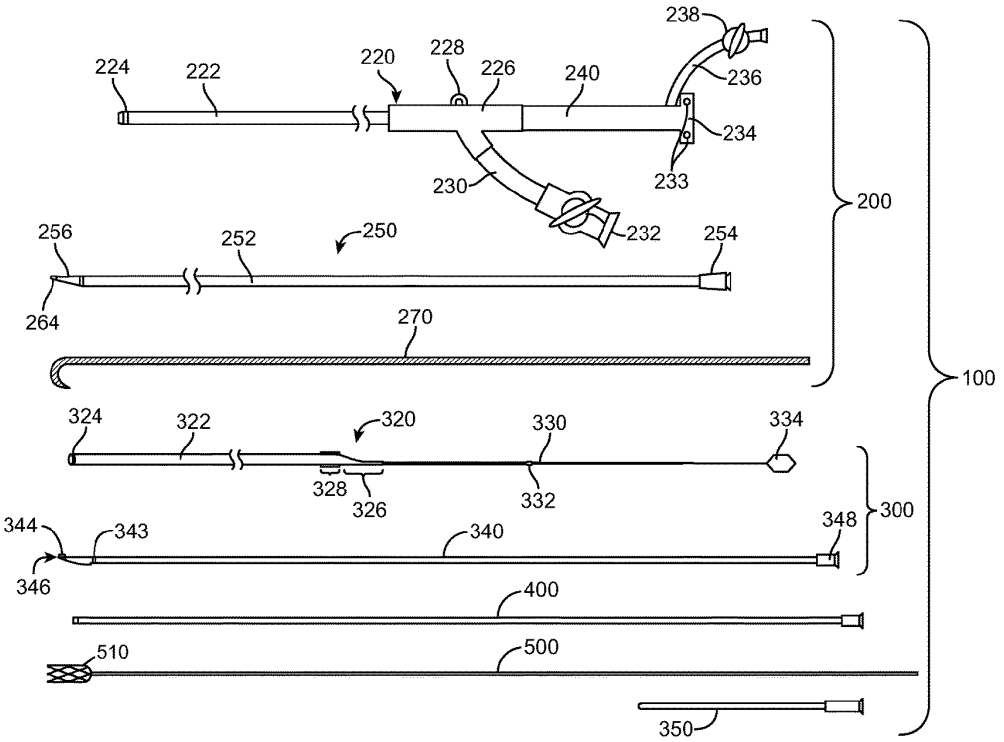

Imperative Care v. Inari Medical
U.S. Patent 11,974,910
Imperative Care Ex. 1032

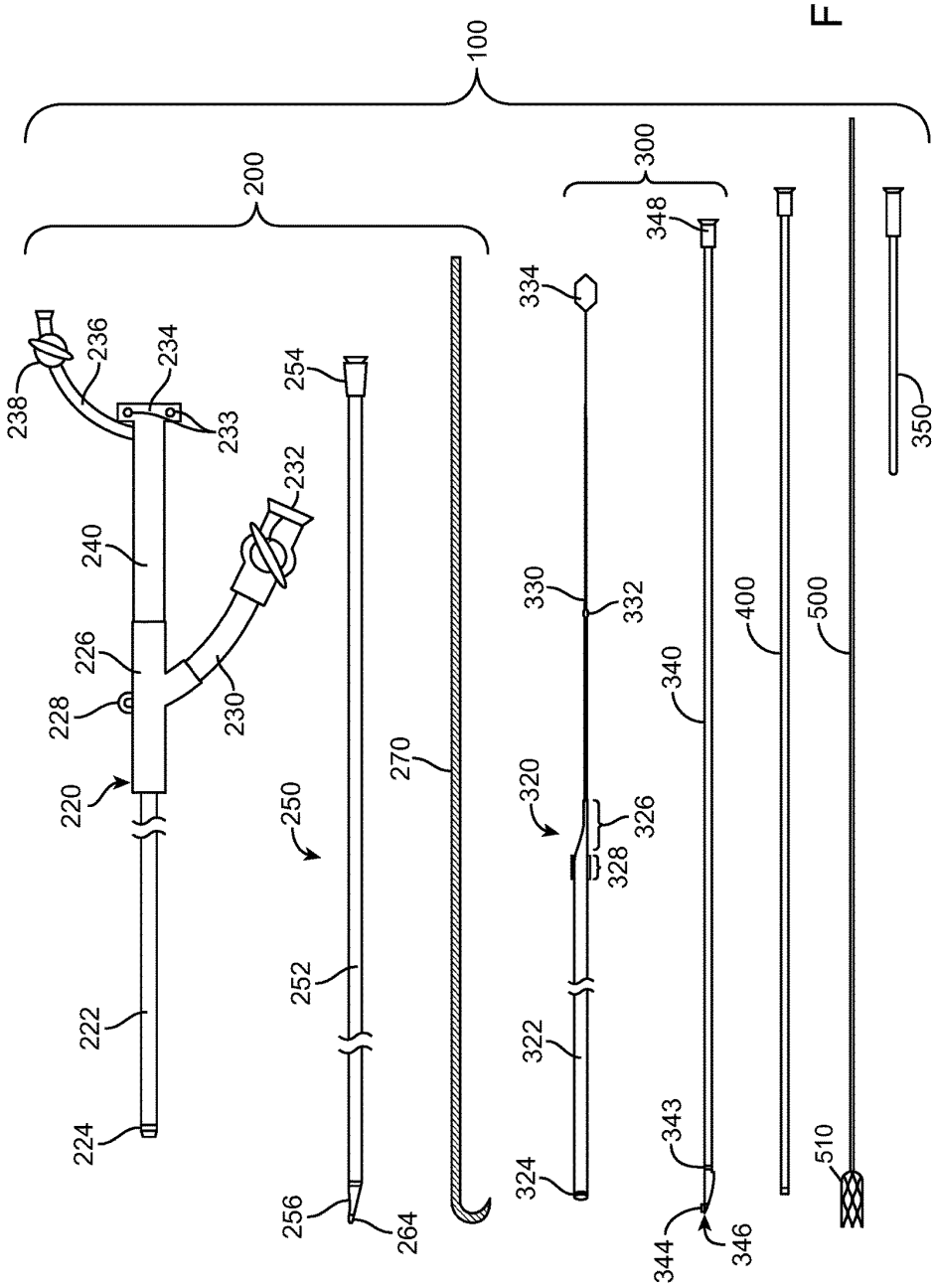
100
200
300
220
222
224
226
228
230
232
233
234
236
238
240
250
252
254
256
264
270
320
322
324
326
328
330
332
334
340
343
344
346
348
350
400
500
510

FIG. 1

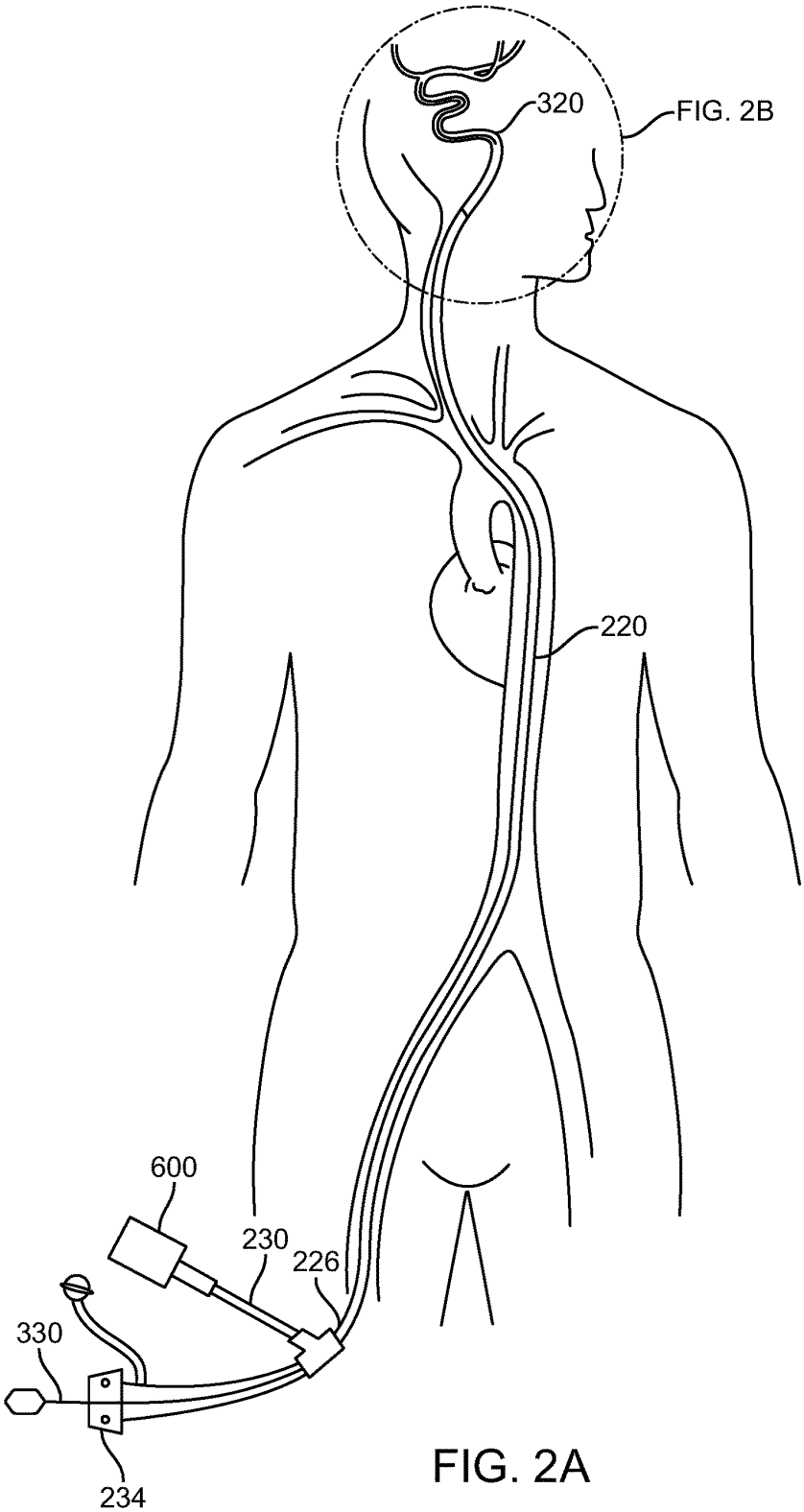

FIG. 2A

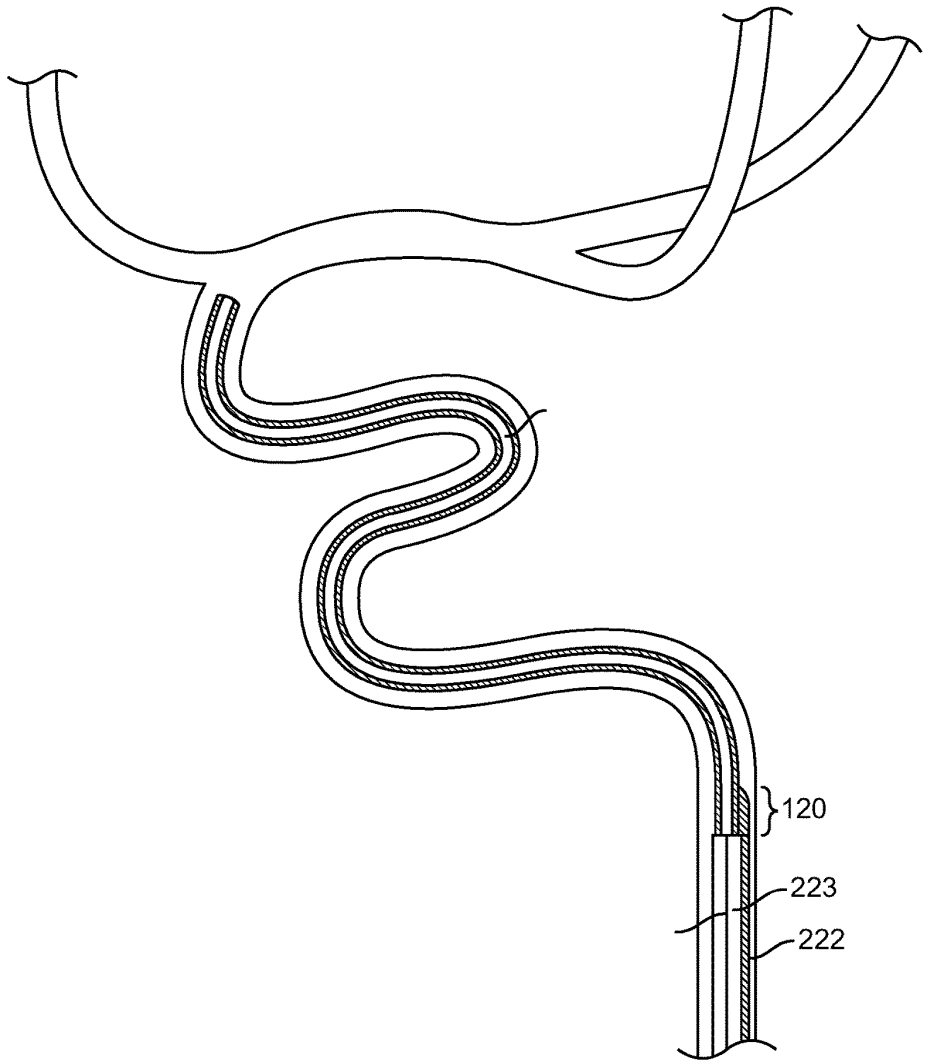

FIG. 2B

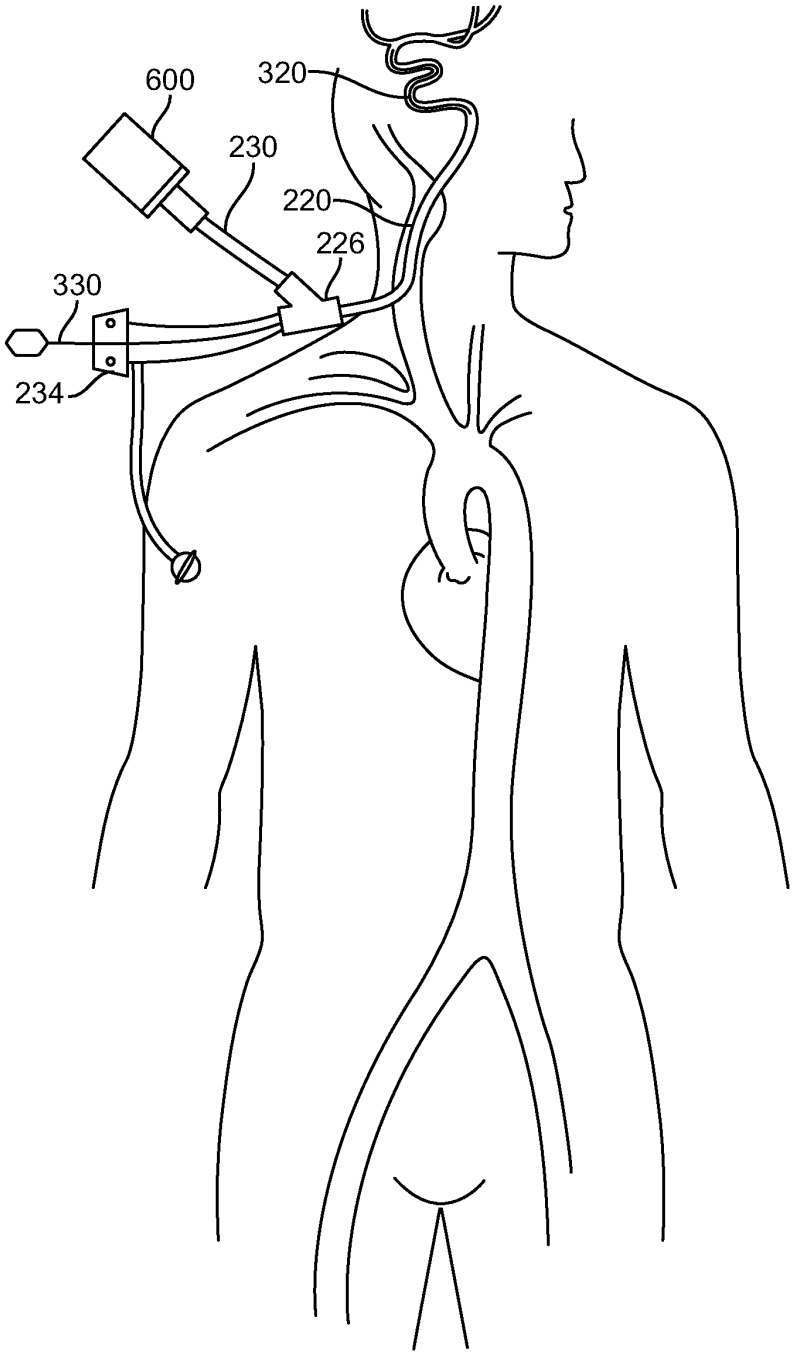

FIG. 3

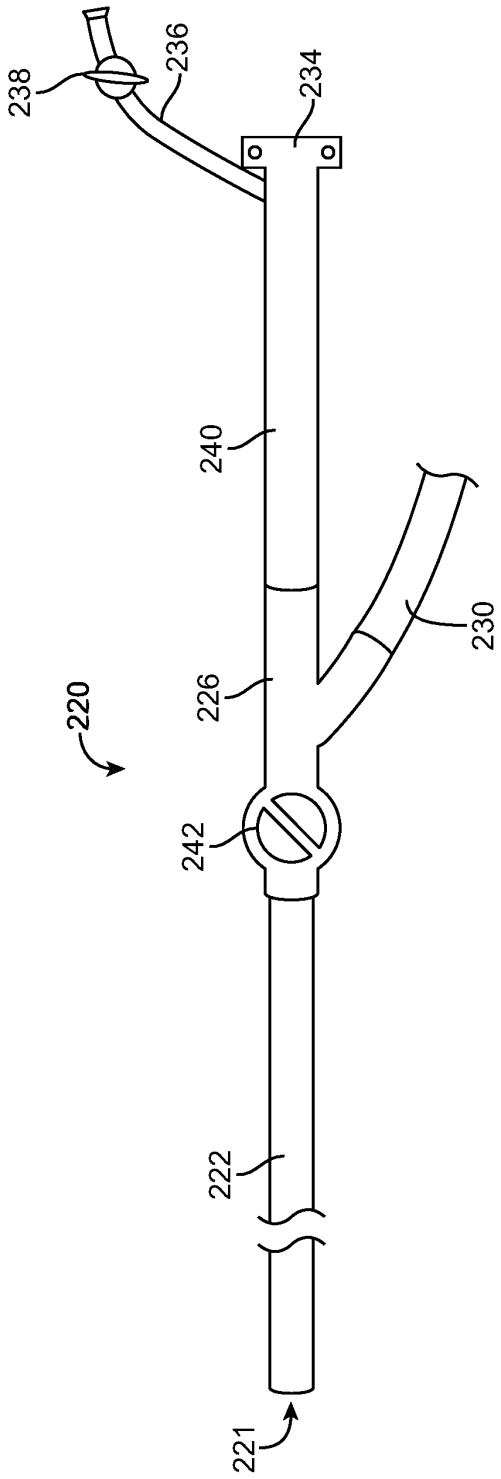

FIG. 4

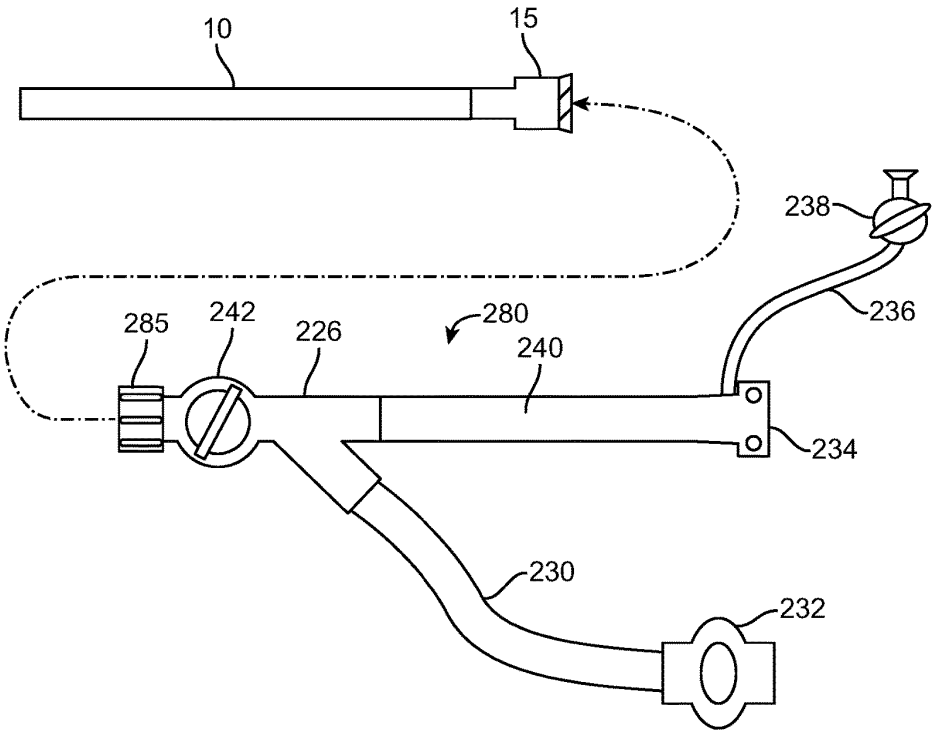

FIG. 5

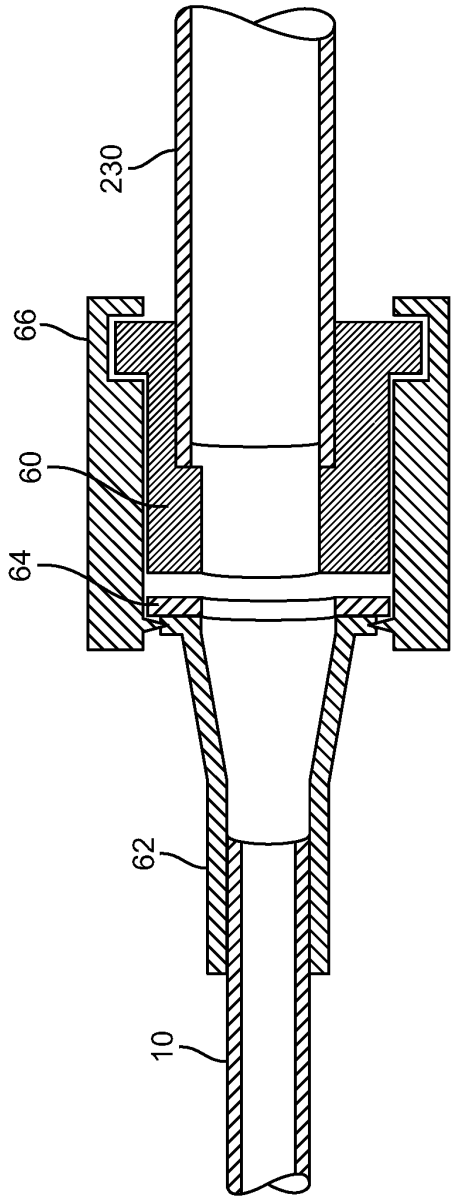

FIG. 6

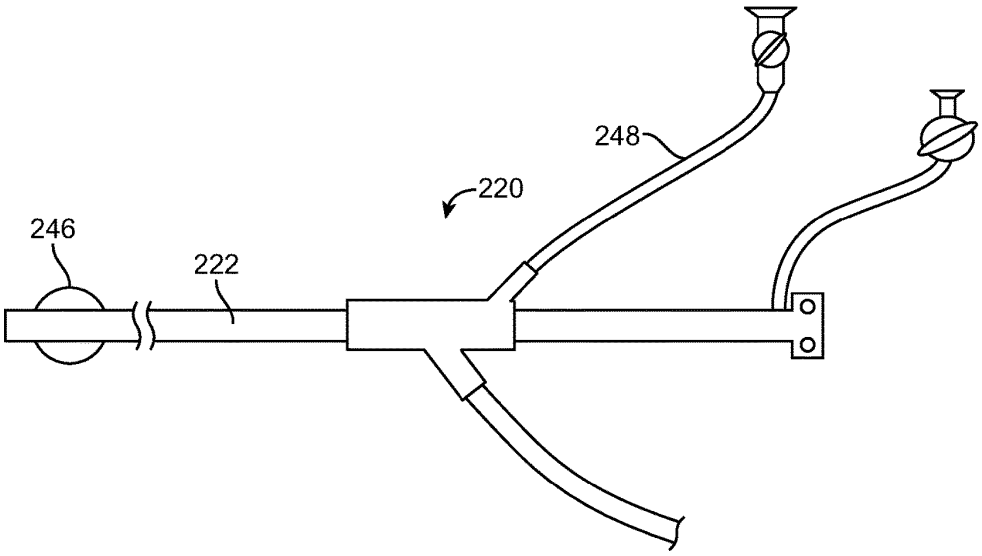

FIG. 7

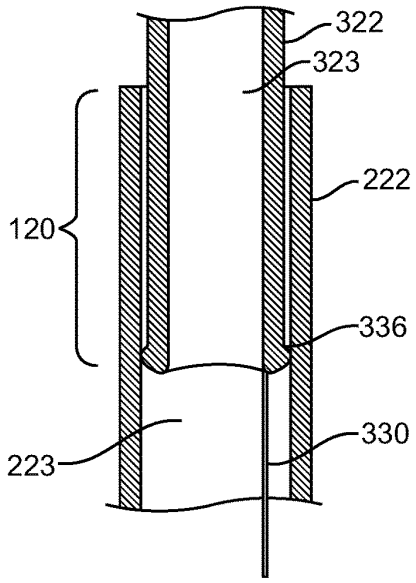

FIG. 8A

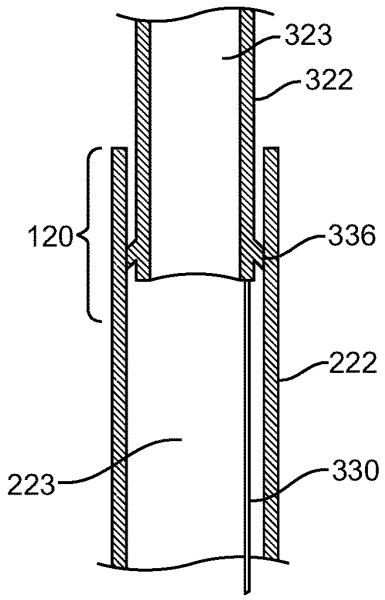

FIG. 8B

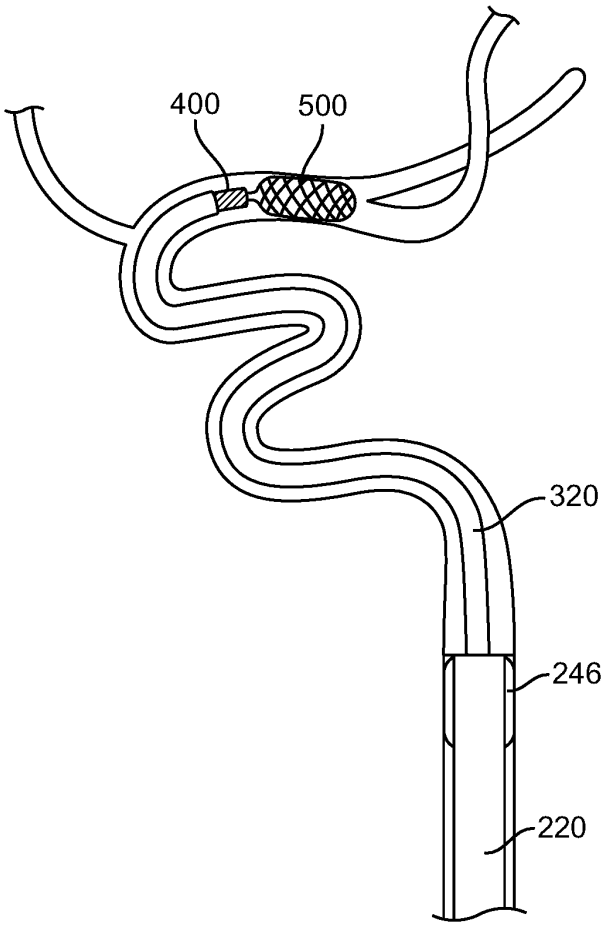

FIG. 9

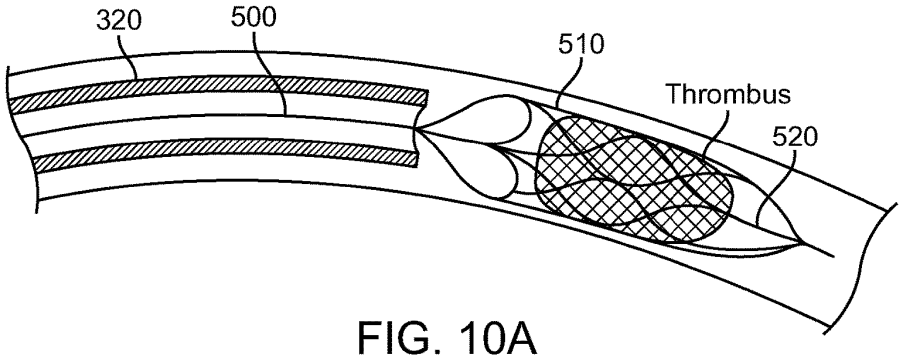

FIG. 10A

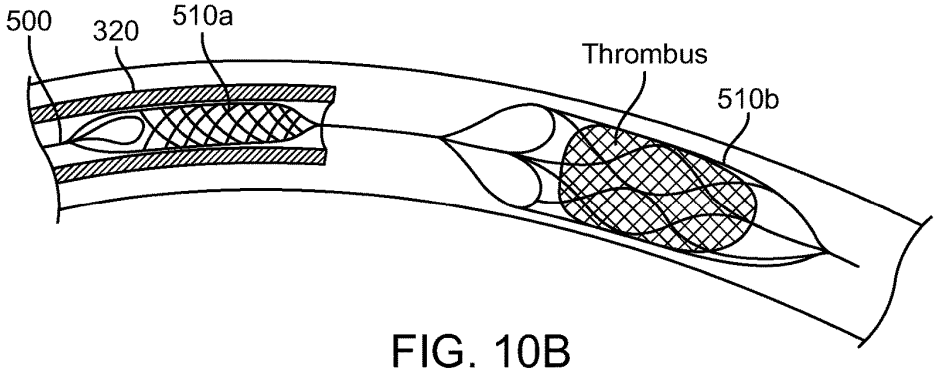

FIG. 10B

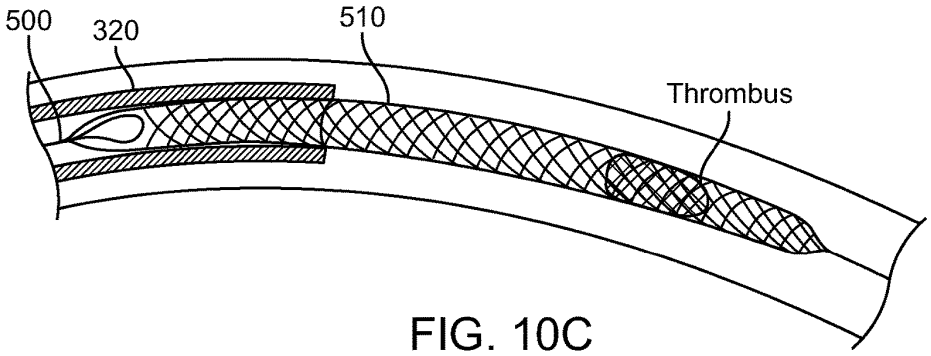

FIG. 10C

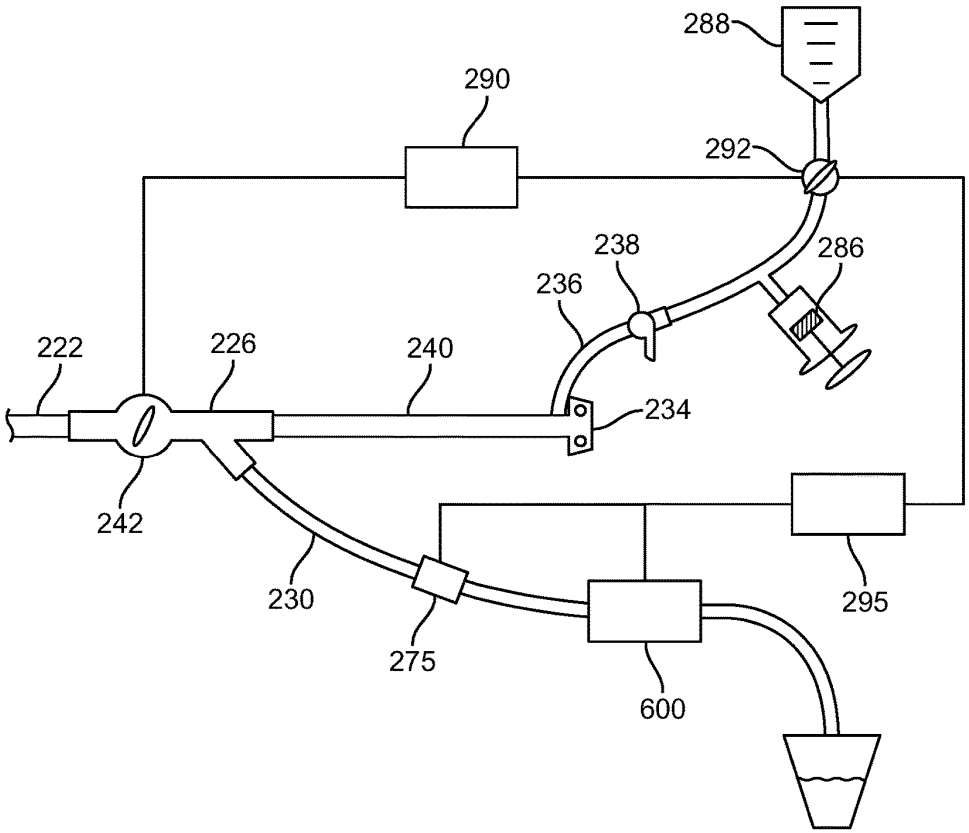

FIG. 11

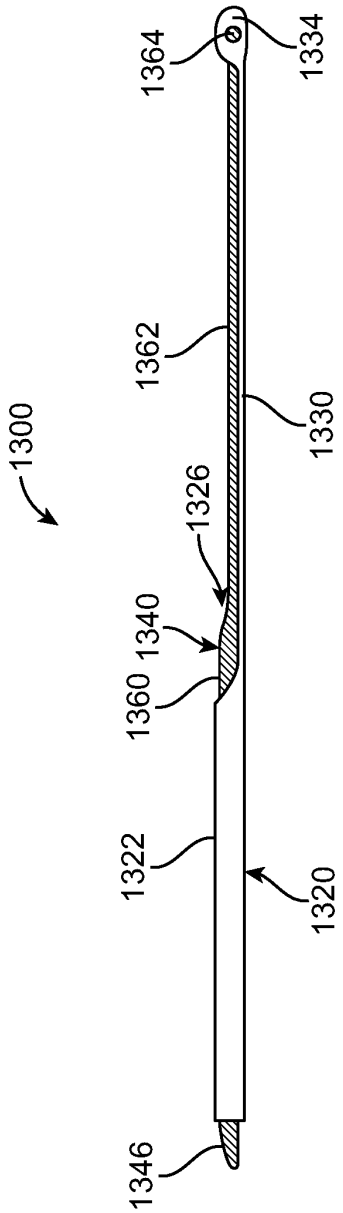

FIG. 12A

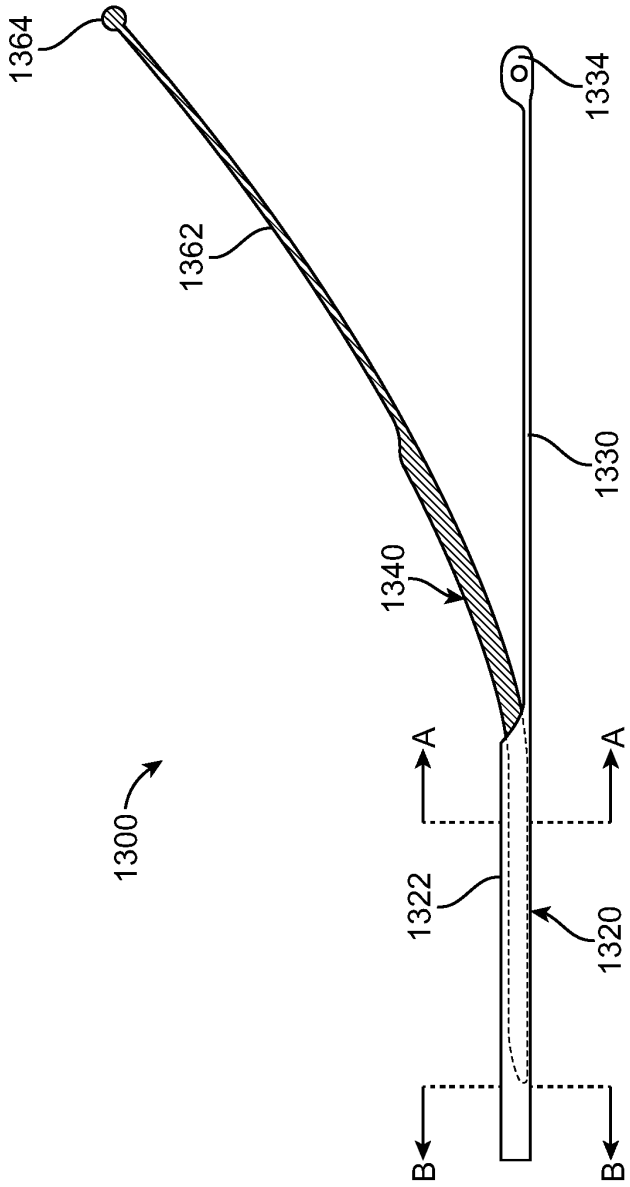

FIG. 12B

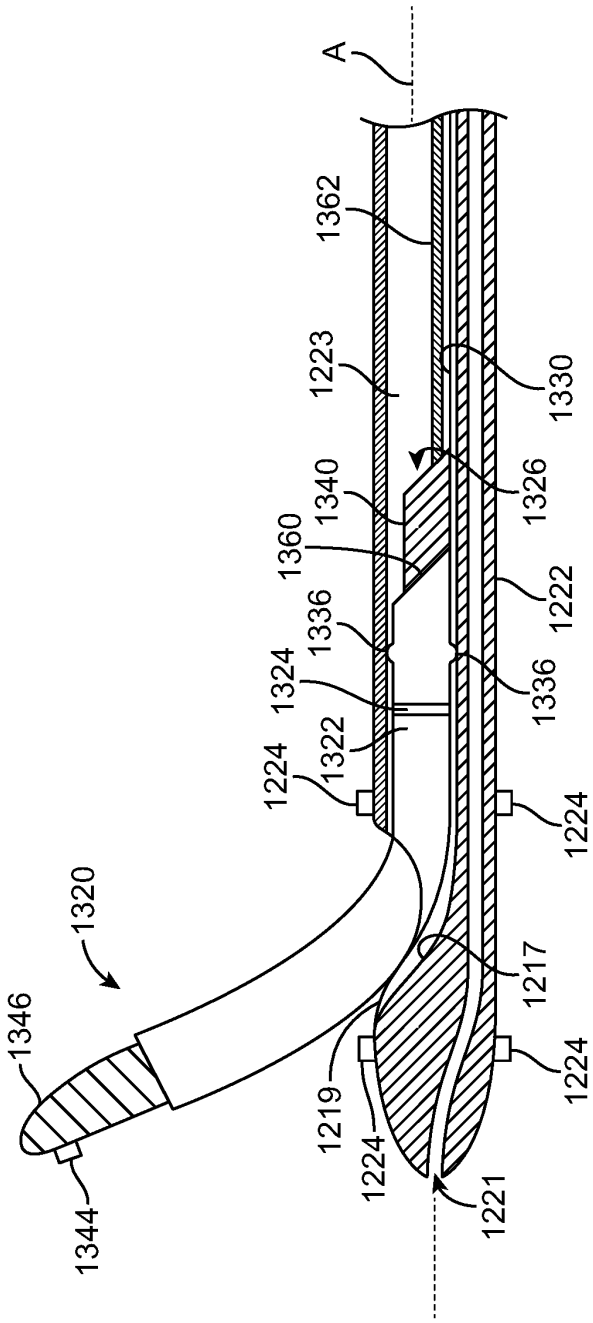
A
1362
1223
1330
1340
1326
1360
1222
1336
1324
1336
1322
1224
1224
1320
1217
1346
1224
1219
1224
1221
1344

FIG. 12C

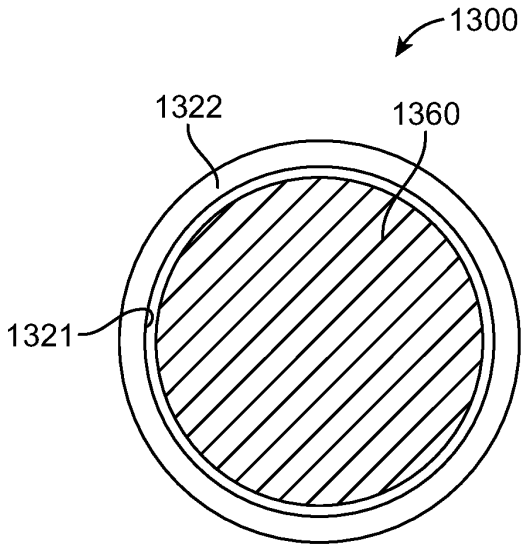

SECTION A-A

FIG. 13

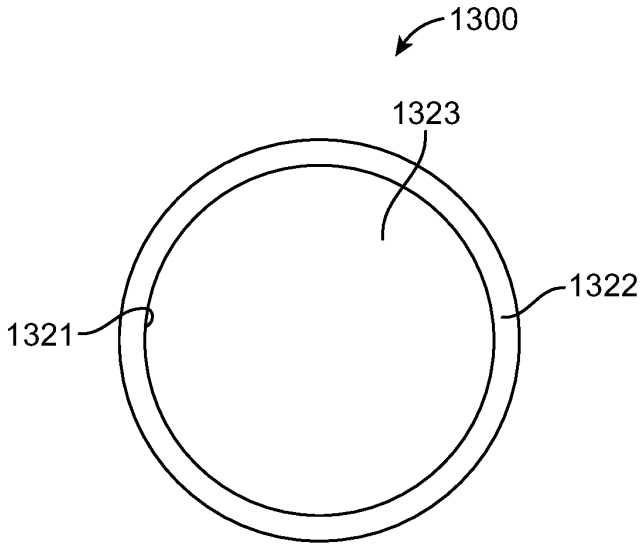

SECTION B-B

FIG. 14

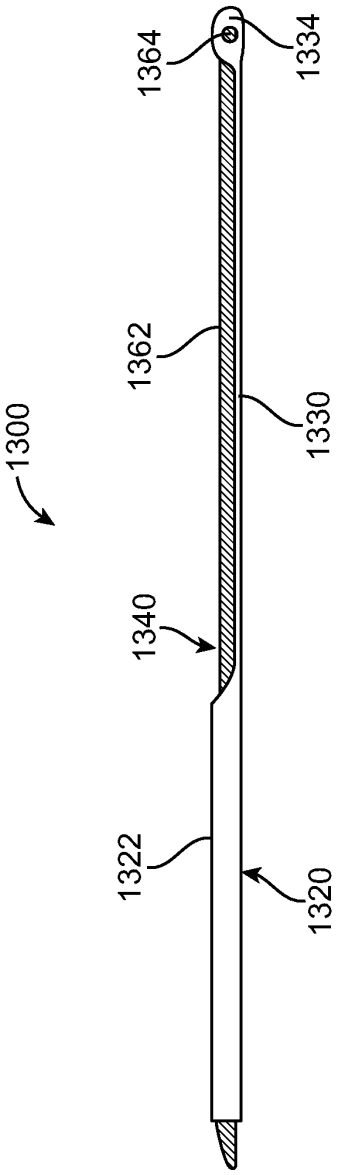

FIG. 15A

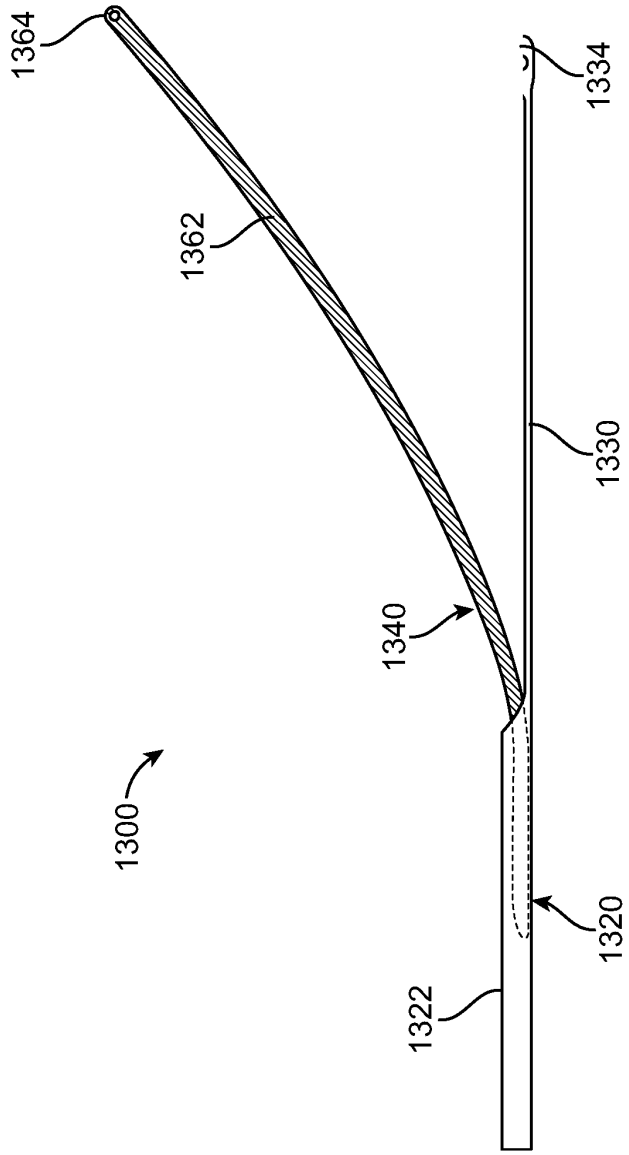

FIG. 15B

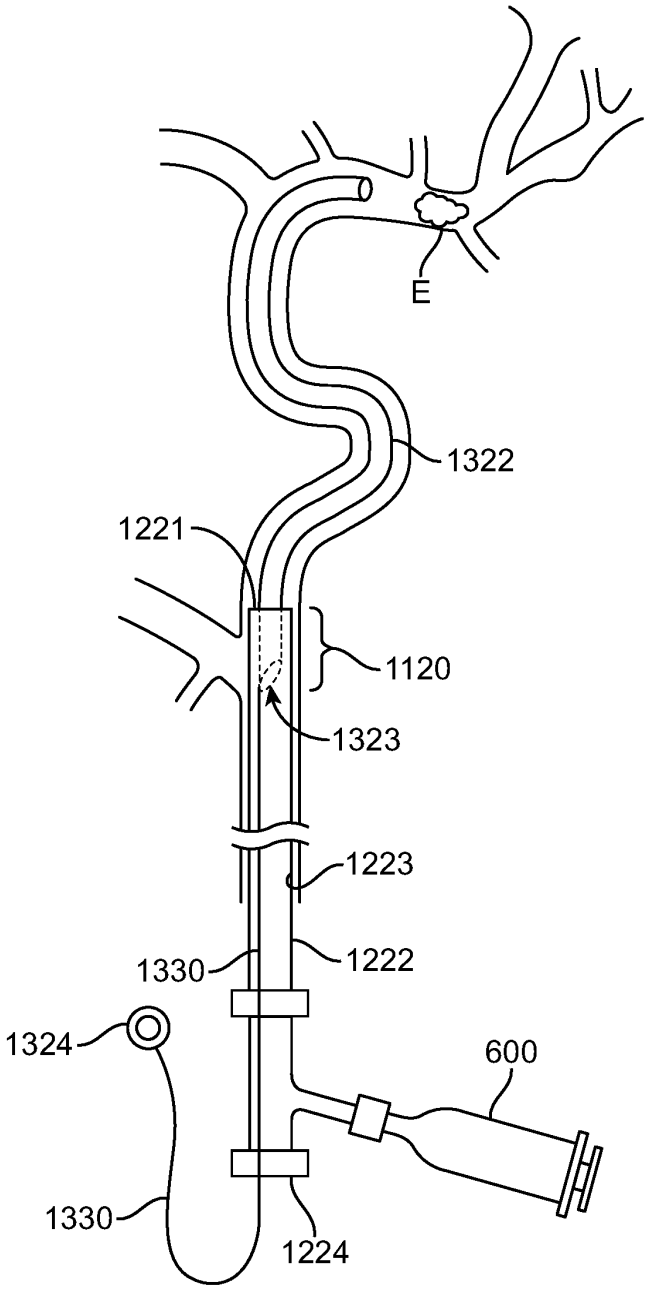

FIG. 16

RAPID ASPIRATION THROMBECTOMY SYSTEM AND METHOD

CROSS-REFERENCE TO RELATED APPLICATIONS

[0001] This application is a continuation of co-pending U.S. patent application Ser. No. 15/015,799, filed Feb. 4, 2016, which claims priority to U.S. Provisional Application Ser. No. 62/111,481, filed Feb. 4, 2015, and U.S. Provisional Application Ser. No. 62/142,637, filed Apr. 3, 2015, the disclosures are each incorporated by reference herein in their entireties.

[0002] This application is also related to the following U.S. Patent Applications, which are incorporated by reference in their entirety: (1) U.S. patent application Ser. No. 14/576,953, filed Dec. 19, 2014; and (2) U.S. patent application Ser. No. 14/569,365, filed Dec. 12, 2014; (3) U.S. patent application Ser. No. 14/537,316, filed Nov. 10, 2014; (4) U.S. patent application Ser. No. 14/221,917, filed Mar. 21, 2014, which are all incorporated by reference.

BACKGROUND

[0003] The present disclosure relates generally to medical methods and devices for the treatment of acute ischemic stroke. More particularly, the present disclosure relates to methods and systems for navigating complex anatomy to perform rapid and safe aspiration and removal of cerebral occlusions.

[0004] Acute ischemic stroke is the sudden blockage of adequate blood flow to a section of the brain, usually caused by thrombus or other emboli lodging or forming in one of the blood vessels supplying the brain. If this blockage is not quickly resolved, the ischemia may lead to permanent neurologic deficit or death. The timeframe for effective treatment of stroke is within 3 hours for intravenous (IV) thrombolytic therapy and 6 hours for site-directed intra-arterial thrombolytic therapy or up to 8 hours for interventional recanalization of a blocked cerebral artery. Re-perfusing the ischemic brain after this time period has no overall benefit to the patient, and may in fact cause harm due to the increased risk of intracranial hemorrhage from fibrinolytic use. Even within this time period, there is strong evidence that the shorter the time period between onset of symptoms and treatment, the better the results. Unfortunately, the ability to recognize symptoms, deliver patients to stroke treatment sites, and finally to treat these patients within this timeframe is rare. Despite treatment advances, stroke remains the third leading cause of death and the leading cause of serious, long-term disability in the United States.

[0005] Endovascular treatment of acute stroke is comprised of either the intra-arterial administration of thrombolytic drugs such as recombinant tissue plasminogen activator (rtPA), mechanical removal of the blockage, or a combination of the two. As mentioned above, these interventional treatments must occur within hours of the onset of symptoms. Both intra-arterial (IA) thrombolytic therapy and interventional thrombectomy involve accessing the blocked cerebral artery via endovascular techniques and devices.

[0006] Like IV thrombolytic therapy, IA thrombolytic therapy alone has the limitation in that it may take several hours of infusion to effectively dissolve the clot. Interventional thrombectomy therapies have involved capturing and removing the clot using snares, coils or temporary stents (also known as retrievable stent devices), and suctioning the clot with or without adjunct disruption of the clot. Retrievable stent devices are also utilized to restore flow quickly to the vessel during the intervention. Hybrid procedures are also utilized, combining retrievable stent devices and aspiration via the guide catheter or via intermediate catheters to aid in the removal of the clot and reduce the risk of distal emboli. Finally, balloons or stents have been used to create a patent lumen through the clot when clot removal or dissolution was not possible.

[0007] To access the cerebral anatomy, guide catheters or guide sheaths are used to guide interventional devices to the target anatomy from an arterial access site, typically the femoral artery. Balloon guide catheters are often used to enable proximal carotid artery occlusion during periods of the procedure which may potentially liberate a high level of emboli. The proximal occlusion has the effect of arresting forward flow and increasing aspiration efficiency through the lumen of the guide catheter. The length of the guide is determined by the distance between the access site and the desired location of the guide distal tip. Interventional devices such as guidewires, microcatheters, and intermediate catheters used for sub-selective guides and aspiration, are inserted through the guide and advanced to the target site. Often, devices are used in a co-axial fashion, namely, a guidewire inside a microcatheter inside an intermediate catheter is advanced as an assembly to the target site in a stepwise fashion with the inner, most atraumatic elements, advancing distally first and providing support for advancement of the outer elements. The length of each element of the coaxial assemblage takes into account the length of the guide, the length of proximal connectors on the catheters, and the length needed to extend from the distal end. Thus, for example, the working length of an intermediate catheter is typically 20-40 cm longer than the working length of a guide, and the working length of a microcatheter is typically 10-30 cm longer than the working length of the intermediate catheter. The guidewire is typically longer than the microcatheter by another 20-50 cm.

[0008] Some exemplary issues with current technology include the time required or even the ability to access the site of the occlusion, the time required to restore flow or the inability to fully, or even partially, restore flow to the vessel, the occurrence of distal emboli during the procedure, which has potentially negative neurologic effect and procedural complications such as perforation and intracerebral hemorrhage. There is a need for a system of devices and methods that enable rapid access, optimized aspiration of the clot, distal protection throughout all stages of the procedure, which potentially liberate emboli, and safe and rapid exchange of devices as needed to fully restore flow to the blocked cerebral vessel.

SUMMARY

[0009] In one aspect, there is disclosed an intravascular access system for facilitation of intraluminal medical procedures within the neurovasculature through an access sheath. The system includes an aspiration or support catheter having a flexible, distal luminal portion having an inner diameter defining a lumen extending between a proximal opening at a proximal end of the luminal portion and a distal opening at a distal end of the luminal portion. The catheter has a rigid spine coupled to at least the proximal end of the

luminal portion and extending proximally therefrom. The system includes a dilator having a flexible, distal dilator portion sized to be received within the lumen of the luminal portion; and a rigid, dilator spine extending proximally from the dilator portion.

[0010] The dilator spine can align side-by-side with the spine of the catheter. The distal dilator portion can have a tapered distal tip. The dilator can have a length at least as long as a length of the catheter such that a distal tip of the dilator protrudes from the distal opening of the luminal portion. The dilator can be generally tubular along at least a portion of the length. A proximal end of the catheter spine can include a gripping feature configured for a user to grasp in order to move the catheter through an access sheath. A proximal end of the dilator spine can include a tab configured to be locked with the gripping feature on the catheter spine. When the catheter and the dilator are in a locked configuration they can be advanced as a single unit through the access sheath. The gripping feature and the dilator tab can be removably coupled such that in a locked configuration the dilator tab engages the gripping feature and in an unlocked configuration the dilator tab disengages from the gripping feature. The dilator tab can be affixed to the dilator or can be slideable on the dilator to accommodate different relative positions between the dilator and the catheter. The distal dilator portion can include one or more detents on an outer surface configured to lock with correspondingly-shaped surface features on an inner surface of the luminal portion lumen through which the dilator portion extends. The dilator spine and the catheter spine can have a similar stiffness and kink-resistance. The dilator can have a visual marker on a distal end and/or a proximal end of the distal tip. A distal end region of the dilator can be more flexible and increasingly stiffen towards a proximal end region of the dilator. The catheter spine and dilator spine can be configured to cause bi-directional sliding movement of the luminal portion through a lumen of an access sheath and navigate the luminal portion into a cerebral vessel to reach a treatment site.

[0011] In an interrelated aspect, disclosed is an intravascular access system for facilitation of intraluminal medical procedures within the neurovasculature having an access sheath and an aspiration or support catheter. The access sheath has a sheath body having an inner diameter defining a lumen between a proximal end and a distal end of the sheath body. The sheath body has at least one opening from the lumen near a distal end region of the sheath body. The aspiration or support catheter includes a flexible, distal luminal portion having an outer diameter sized for insertion through the lumen of the access sheath, an inner diameter defining a lumen extending between a proximal opening at a proximal end of the luminal portion and a distal opening at a distal end of the luminal portion, and a length between the proximal opening and the distal opening. The aspiration or support catheter includes a rigid spine coupled to at least the proximal end of the luminal portion and extending proximally therefrom. The rigid spine is configured to cause bi-directional sliding movement of the luminal portion through the lumen of the access sheath and out the at least one opening to navigate the luminal portion into a cerebral vessel to reach a treatment site. A portion of the outer diameter of the luminal portion fluidly seals with the inner diameter of the access sheath when the distal end of the luminal portion extends into the cerebral vessel to reach the treatment site.

[0012] The luminal portion and the sheath body can be concentrically aligned and the lumen of the luminal portion and the lumen of the sheath body form a contiguous aspiration lumen from the distal end of the luminal portion to the proximal end of the sheath body. The contiguous aspiration lumen can be used to aspirate fluid and debris from the distal opening of the luminal portion. The contiguous aspiration lumen can be to deliver materials through the distal opening of the luminal portion. The contiguous aspiration lumen can form a step-up in diameter where the lumen of the luminal portion empties into the lumen of the sheath body. The lumen of the luminal portion can be shorter than the lumen of the sheath body. The luminal portion and the sheath body can form an overlap region when the luminal portion extends distally beyond the at least one opening of the sheath body. The outer diameter of the luminal portion can approach the inner diameter of the lumen of the sheath body such that a seal is formed by the overlap region. The seal can be configured to enable sealing against a vacuum of up to 25 inHg, or up to 28 inHg. The seal within the overlap region can be configured to enable sealing against a pressure of up to 300 mmHg or up to 600 or up to 700 mmHg. The seal can be located distal a proximal end of the luminal portion and proximal to the at least one opening of the sheath body.

[0013] The system can further include a sealing element positioned on an external surface of the luminal portion. The sealing element can include a stepped up diameter or protruding feature in the overlap region. The sealing element can include one or more external ridge features. The one or more ridge features can be compressible when the luminal portion is inserted into the lumen of the sheath body. The sealing element can include one or more inclined surfaces biased against an inner surface of the sheath body lumen. The sealing element can include one or more expandable members actuated to seal. The sheath body can have an outer diameter suitable for insertion into the carotid artery. The outer diameter of the sheath body can be between 5 Fr and 7 Fr.

[0014] The sheath body can have a length between the proximal end and the distal end suitable for locating the distal end of the sheath body at the petrous portion of an internal carotid artery from a transfemoral approach. The length of the sheath body can be between 80 cm and 105 cm. The length of the luminal portion can be between 10 cm and 25 cm. The length of the luminal portion can be less than a length of the sheath body such that as the catheter is retracted into the sheath body a seal remains between an overlap region of the luminal portion and the inner diameter of the sheath body.

[0015] The spine can be longer than an entire length of the sheath body. The luminal portion can include three or more layers including an inner lubricious liner, a reinforcement layer, and an outer jacket layer. The outer jacket layer can be composed of discreet sections of polymer with different durometers, compositions, and/or thicknesses to vary the flexibility along the length of the distal luminal portion. The outer diameter of the distal luminal portion can be sized for navigation into cerebral arteries. The inner diameter of the distal luminal portion can be between 0.040" and 0.088". The outer diameter of the luminal portion can approach the inner diameter of the sheath body creating a sealed area at

an overlap region while still allowing the catheter to move through the sheath body. The catheter can be tapered towards the distal opening such that a distal-most end of the luminal portion has a smaller outer diameter compared to a more proximal region of the luminal portion near where the luminal portion seals with the sheath body. The distal end region of the sheath body can include an occlusion element. The distal end region of the sheath body can include an expanding distal tip. The at least one opening from the lumen can include a side opening located a distance away from a distal tip of the sheath body. The distal tip of the sheath body further can include a ramp feature configured to direct at an angulation the catheter away from a longitudinal axis of the sheath body lumen out through the at least one opening.

[0016] The spine can be longer than an entire length of the sheath body. The spine can be a wire having an outer dimension from 0.014" to 0.018". The spine can be a hypotube having a guide-wire passageway extending therethrough. The spine can be a ribbon having an outer dimension from 0.010" to 0.025" thick. The ribbon can be curved along at least a portion of an arc. The spine can be configured to rotate the luminal portion around a longitudinal axis of the access sheath. The spine can be eccentrically coupled to the luminal portion and the spine extend proximally from the luminal portion to outside the proximal end of the sheath body. The proximal end of the luminal portion can have an angled cut. The angled cut can be generally planar or curved. The sheath body can have one or more visual markers on the distal end region of the sheath body. The distal luminal portion can have one or more visual markers at a distal end region of the luminal portion, a proximal end region of the luminal portion or both. The one or more visual markers on the sheath body and the one or more visual markers on the luminal portion can be visually distinct. The spine can have one or more visual markers. The one or more visual markers of the spine can indicate overlap between the distal luminal portion and the sheath body. The one or more visual markers of the spine can be positioned so that when the visual marker of the spine is aligned with a portion of the access sheath, the catheter is positioned at a distal-most position with minimal overlap length needed to create a seal between the catheter and the sheath body.

[0017] The system can further include a dilator having a flexible, distal dilator portion having a distal tip and sized to be received within the luminal portion of the catheter. The dilator can be a tubular element along at least a portion of its length. The dilator can be a solid rod formed of malleable material configured to be shaped by a user. The dilator can further include a rigid, dilator spine extending proximally from the dilator portion. The dilator spine can be coaxial and can have a lumen extending through it. The dilator spine can be eccentric. When in use, the dilator spine can align side-by-side with the spine of the catheter. The distal tip of the dilator can be tapered. The dilator can have a length at least as long as a length of the catheter such that the distal tip protrudes from the distal opening of the luminal portion. A proximal end of the spine can include a gripping feature configured for a user to grasp in order to move the catheter through the access sheath. A proximal end of the dilator spine can include a tab configured to be locked with the gripping feature on the catheter spine. When the catheter and dilator are in a locked configuration they can be advanced as a single unit through the sheath body. The gripping feature and the dilator tab can be removably coupled such that in a locked configuration the dilator tab engages the gripping feature and in an unlocked configuration the dilator tab disengages from the gripping feature. The dilator tab can be affixed to the dilator and/or can be slideable on the dilator to accommodate different relative positions between the dilator and the catheter.

[0018] The distal dilator portion can include one or more detents on an outer surface configured to lock with correspondingly-shaped surface features on an inner surface of the luminal portion lumen through which the dilator portion extends. The dilator spine and the catheter spine can have a similar stiffness and kink-resistance. The dilator can have a visual marker on a distal end and/or a proximal end of the distal tip. A distal end region of the dilator can be more flexible and increasingly stiffens towards the proximal end region of the dilator.

[0019] The access sheath can further include a connector that connects the proximal end of the sheath body to a proximal hemostasis valve. The proximal hemostasis valve can have an adjustable opening sized large enough to allow removal of the catheter without dislodging any clots thereon. When in use with the access sheath, the rigid spine of the catheter can extend proximally from the luminal portion through the access sheath lumen and out the proximal hemostasis valve of the access sheath. The connector can provide a connection of the proximal end of the sheath body to an aspiration line. The connector can have a large bore inner lumen and connects to a large-bore aspiration line. The aspiration line can connect to an aspiration source. The aspiration source can be an active aspiration source. The aspiration line can connect to a forward drip or flush line. The access sheath can further include a proximal extension portion such that when the distal luminal portion of the catheter is withdrawn from the sheath body lumen it remains within the proximal extension portion. The inner diameter of the luminal portion can be sized to permit placement of an interventional device through the luminal portion.

[0020] Other features and advantages should be apparent from the following description of various implementations, which illustrate, by way of example, the principles of the invention.

BRIEF DESCRIPTION OF THE DRAWINGS

[0021] FIG. **1** is an exploded view of a system of devices for accessing and removing a cerebral occlusion to treat acute ischemic stroke from a femoral artery access site;

[0022] FIG. **2**A shows components of the system of FIG. **1** in position in a patient from the transfemoral approach to treat the occlusion;

[0023] FIG. **2**B is a detailed view of a portion of the system of FIG. **2**A taken along circle BB;

[0024] FIG. **3** shows components of the system of FIG. **1** being used via a transcarotid access site;

[0025] FIG. **4** shows an implementation of an access sheath;

[0026] FIG. **5** shows an implementation of a proximal portion of the access sheath of FIG. **4** provided as a separate, removable component;

[0027] FIG. **6** shows an implementation of a connector to minimize flow resistance through the access sheath of FIG. **4** into the proximal portion;

[0028] FIG. **7** shows an implementation of an access sheath having an occlusion balloon;

[0029] FIGS. **8**A-**8**B show implementations of sealing elements between the access sheath body and luminal portion of a catheter extending therethrough;

[0030] FIG. **9** shows an implementation of a microcatheter and retrievable stent device positioned through a spined catheter;

[0031] FIGS. **10**A-**10**C show implementations of expandable portions on retrievable stent devices;

[0032] FIG. **11** shows an implementation of an aspiration system for use with the systems described herein;

[0033] FIG. **12**A shows an implementation of a spined catheter system for use with the systems described herein;

[0034] FIG. **12**B shows the spined catheter system of FIG. **12**A having a spined dilator extending through a lumen of a spined catheter;

[0035] FIG. **12**C shows the spined catheter system of FIG. **12**A extended through a side opening of an implementation of an access sheath;

[0036] FIG. **13** is a cross-sectional view taken about line A-A of FIG. **12**B;

[0037] FIG. **14** is a cross-sectional view taken about line B-B of FIG. **12**B;

[0038] FIG. **15**A shows an implementation of a spined aspiration catheter-dilator system having a spined catheter and a spined dilator in a locked configuration;

[0039] FIG. **15**B shows the spined aspiration catheter-dilator system having the spined catheter and the spined dilator in an unlocked configuration;

[0040] FIG. **16** shows an implementation of a spined catheter system extending distally to an access sheath to treat an embolus in a cerebral vessel.

DETAILED DESCRIPTION

[0041] One of the major drawbacks to current acute stroke intervention procedures is the amount of time required to restore blood perfusion to the brain. This time includes the time it takes to access the occlusive site or sites in the cerebral artery, and the time it takes to completely remove the occlusion in the artery. Because it is often the case that more than one attempt must be made to completely remove the occlusion, reducing the number of attempts as well as reducing the time required to exchange devices for additional attempts is an important factor in minimizing the overall time. Additionally, each attempt is associated with potential procedural risk due to device advancement in the delicate cerebral vasculature.

[0042] Disclosed herein are methods and devices that enable safe and rapid access to the complex neurovascular anatomies of the cerebral and intracranial arteries and removal of the occlusion. The methods and devices include one or more access devices, catheters, and thrombectomy devices to remove the occlusion. Methods and devices are also disclosed to provide active aspiration and/or passive flow reversal for the purpose of facilitating removal of the occlusion as well as minimizing distal emboli. The system offers the user a degree of flow control so as to address the specific hemodynamic requirements of the cerebral vasculature. The systems described herein provide superior ease of use in that a single operator may operate the disclosed systems using single-point continuous aspiration for rapid and safe exchange without switching. The higher efficiency of aspiration force through the systems described herein reduces distal embolic debris and increases the rate of "one-pass" thrombectomy.

[0043] It should be appreciated that while some embodiments are described with specific regard to aspirating a neurovascular anatomy, the embodiments are not so limited and may also be applicable to other uses. For example, the spined aspiration catheter and one or more components of the access systems described herein may be used to deliver working devices to a target vessel of a coronary anatomy, or other vasculature anatomy. It should be appreciated that where the phrase "aspiration catheter" is used herein that such a catheter may be used for other purposes besides or in addition to aspiration, such as the delivery of fluids to a treatment site or as a support catheter providing a conduit that facilitates and guides the delivery or exchange of other devices such as a guidewire or interventional devices. Alternatively, the access systems need not be limited only to the vasculature can be useful for access of other parts of the body outside the vasculature. It should also be appreciated that reference throughout this specification to a particular feature, structure, configuration, characteristic or implementation or embodiment may be combined in any suitable manner. The use of relative terms throughout the description may denote a relative position or direction. For example, "distal" may indicate a first direction away from a reference point. Similarly, "proximal" may indicate a location in a second direction opposite to the first direction. However, such terms are provided to establish relative frames of reference, and are not intended to limit the use or orientation of an anchoring delivery system to a specific configuration described in the various embodiments below.

[0044] FIG. **1** shows a system of devices for accessing and removing a cerebral occlusion to treat acute ischemic stroke from a femoral artery access site. The system **100** includes an access sheath **220**, sheath dilator **250**, guidewire **270**, one or more spined aspiration or support catheters **320**, dilator **340**, microcatheter **400**, and a retrievable stent device **500**, each of which will be described in more detail below. Further, the system **100** can include one or more arterial access sheath system **200** that includes an access sheath **220**, one or more sheath dilators **250** and a sheath guidewire **270**. The system **100** can include one or more spined catheter systems **300** including a spined aspiration or support catheter **320**, a tapered dilator **340**, and alternatively a catheter clearing tool **350**. The spine catheter system **300** can incorporate nested spined catheters to provide for extended reach into distal sites. The system **100** can include an access sheath system **200**, a tapered catheter system **300**, a microcatheter **400**, and a retrievable stent device **500**.

[0045] FIG. **2**A shows some elements of the system in position in the patient from the transfemoral approach to treat the occlusion. The access sheath **220** can be inserted through a femoral artery insertion site positioned with the distal tip of the access sheath **220** at or near the petrous portion of the internal carotid artery ICA. The spined aspiration catheter **320** can be positioned with the distal tip at the face of the occlusion in the artery. In some implementations, the access sheath **220** can be inserted through a direct puncture in the wall of the common carotid artery and advanced into the internal carotid artery rather than via a transfemoral approach (see FIG. **3**).

[0046] As seen more clearly in detailed FIG. **2**B, the access sheath **220** can have a sheath body **222** and an inner lumen **223** extending between a proximal end and a distal end region of the sheath body **222**. The spined aspiration catheter **320** is sized to extend through the inner lumen **223**

of the access sheath **220** such that a distal end region of the catheter **320** extends beyond a distal end region of the access sheath **220**. The catheter **320** is shown in FIG. **2**B exiting the lumen **223** of the sheath body **222** through a distal opening **221**. It should be appreciated, however, that the sheath body **222** may have one or more side openings near a distal end region of the body **222** through which the catheter **320** can extend (see FIG. **12**C) as will be described in more detail below.

[0047] Still with respect to FIG. **2**B, the spined aspiration catheter **320** can include a relatively flexible, distal luminal portion **322** coupled to a stiff and kink-resistant proximal spine **330**. The distal luminal portion **322** can have an inner lumen **323** extending between a proximal end and a distal end of the luminal portion **322**. The lumen **323** of the catheter **320** can have a first inner diameter and the lumen **223** of the access sheath **220** can have a second, larger inner diameter. The lumens **223**, **323** are fluidly connected and contiguous such that fluid flow into and/or out of the system is possible, such as by applying suction from an aspiration source coupled to the system via a connector **226** on the access sheath **220**. An overlap region **120** between the distal section of the sheath body **222** and the luminal portion **322** of the catheter **320** is sized and configured to create a seal that enables a continuous aspiration lumen from the distal tip region of the spined catheter **320** to the proximal sheath connector **226**. If the sheath body **222** has a side opening through which the distal luminal portion **322** of the catheter **320** extends, the seal created at the overlap region **120** between the sheath body **222** and the luminal portion **322** is located proximal to the side opening.

[0048] Key dimensions that affect aspiration force through a tube include radius (r), pressure (P), viscosity (n) and length (L) where $Flow=Q=\pi r^4(\Delta P)/8\ nL$. Changes in radius increase flow to the 4th power and length is inversely proportional to flow. As will be described in more detail below, the aspiration catheter has an over-the-wire portion that is a fraction of the overall distance required to reach the target site. This configuration greatly speeds up the time required to retract and re-advance the catheter. Further, the systems described herein can provide for a markedly increased radius and luminal area for aspiration of the clot and markedly shorter length, particularly compared to prior systems where the aspiration lumen runs along the entire inner diameter of the aspiration catheter. In the systems described herein, the majority of the aspiration lumen has a radius of the procedural sheath. The catheter **320** is smaller in diameter than the guide, but steps up in luminal diameter upon reaching the lumen of the access sheath **220** allowing for a greater aspiration force to be applied to a majority of the length of the luminal system. Further, the overall length of this narrow diameter region of the catheter **320** is much shorter compared to the overall length of the access sheath. The proximal spine **330** of the catheter **320** has a length and structure that extends through the lumen **223** of the access sheath **220** to a proximal end of the system such that it can be used to advance and retract the catheter **320** through the lumen **223** of the sheath **220**. The spine **330** of the aspiration catheter **320**, however, takes up only a fraction of the luminal space the system resulting in increased luminal area for aspiration. Increased luminal area for aspiration increases the time it takes to aspirate the occlusion and increases the possibility of removing the occlusion in a single aspiration attempt. The stepped up luminal diameter also increases the annular area available for forward flushing of contrast, saline, or other solutions while devices such as microcatheters or tapered dilators are coaxially positioned in the spined catheter **320** and access sheath **220**. This can increase the ease and ability to perform angiograms during device navigation.

[0049] Current stroke interventions pose a risk of distal emboli being released. During the effort to remove or dissolve clot blockages in the cerebral artery, for example, there is a significant risk of thrombus fragmentation creating embolic particles that can migrate downstream into either the occluded vessel or other vessels and compromise cerebral perfusion. In carotid artery stenting procedures (CAS), embolic protection devices and systems are commonly used to reduce the risk of embolic material from entering the cerebral vasculature. The types of devices include intravascular distal filters, and reverse flow or static flow systems. Unfortunately, because of the delicate anatomy and access challenges as well as the need for rapid intervention, these types of embolic protection systems are not used in interventional treatment of acute ischemic stroke. The period of a stroke intervention when flow is restored is normally considered an important time as the brain is now being perfused by blood. However, it is also a period of embolic risk. While there is blockage in the artery, there is no flow. Therefore any embolic debris created by crossing the occlusion with guidewire and/or microcatheter, or deployment of a retrievable stent device across the occlusion, remains stagnant. However, when flow is restored to the artery, the emboli can now flow antegrade to distal vascular territories.

[0050] A second period of embolic risk occurs when the retrievable stent device is being pulled back into the guide or catheter. In prior methods and devices, aspiration is applied to the intermediate catheter during retrievable stent device retraction into the catheter, or the catheter and retrievable stent device are pulled back together into the guide, while simultaneously applying aspiration to the guide catheter. Two points of aspiration, through the catheter and through the guide, may both be utilized to reduce risk of distal emboli during the critical step of drawing the occlusion through the guide and out of the patient. Often, two people are required to enable two points of aspiration, or aspiration is performed sequentially from first the catheter and then the guide, which may lead to interruption in aspiration or sub-optimal aspiration. In the disclosed systems and methods, reverse flow may be applied to the target site during device advancement, at the critical time of flow restoration, and during the entire time that the occlusion is being removed, with a single point of aspiration.

[0051] In an aspect of the disclosure, the level of aspiration may be modified from a low level to achieve adequate protection from distal emboli, to a higher level to provide effective aspiration removal of the occlusion. This aspect allows distal protection without high levels of blood loss, yet allows a strong aspiration force as needed to remove the occlusion.

[0052] In another aspect, there are disclosed methods and devices for additionally providing active aspiration or passive retrograde flow during the procedure to remove thrombus and to minimize distal emboli. The system offers the user a degree of blood flow control so as to address the specific hemodynamic requirements of the cerebral vasculature. The system may include a flow controller, which allows the user to control the timing and mode of aspiration.

[0053] In another aspect, there are disclosed methods and devices for additionally providing flushing steps to minimize emboli entrapment in the system and increased visibility of particulates in the system during use.

[0054] The following descriptions provide detailed implementations and benefits of each aspect of the disclosed invention.

[0055] Referring again to FIG. **1** illustrating an implementation of an access sheath **220**. The sheath **220** can include a sheath body **222** that is the insertable portion of the sheath **220** (i.e. the portion that inserts into the patient), a proximal connector **226**, an aspiration line **230**, a proximal hemostasis valve **234** and a flush line **236**. The sheath **220** may also include a proximal extension portion **240**, and may also include a valve on the connector **226** to fluidly isolate the sheath body **222** from the proximal portion **240** of the access sheath **220**. The access sheath **220** may come in a kit with one or more dilators **250**, and a sheath guidewire **270**.

[0056] The diameter of the sheath body **222** is suitable for insertion into the carotid artery, with an inner lumen **223** that is suitably sized for providing a passageway for catheters to treat the occlusion. In an implementation, the sheath body **222** can have an inner diameter of about 0.074" and an outer diameter of about 0.090", corresponding to a 5 French sheath size, an inner diameter of about 0.087" and an outer diameter of about 0.104", corresponding to a 6 French sheath size, or an inner diameter of about 0.100" and an outer diameter of about 0.177", corresponding to a 7 French sheath size. The length of the sheath body **222** is configured to enable the distal tip of the sheath body **222** to be positioned as far distal as the petrous portion of the internal carotid artery. In an implementation, the sheath body **222** length is suitable for a transfemoral approach, in the range 80 to 90 cm or up to about 100 cm or up to about 105 cm. In an implementation, the sheath body **222** length is suitable for a transcarotid approach to the petrous ICA, in the range 20 to 25 cm. In an implementation, the sheath body **222** length is suitable for a transcarotid approach to the CCA or proximal ICA, in the range 10-15 cm. The sheath body **222** is configured to assume and navigate the bends of the vasculature and be subject to high aspiration forces without kinking, collapsing, or causing vascular trauma.

[0057] The sheath body **222** can be constructed in two or more layers. An inner liner can be constructed from a low friction polymer such as PTFE (polytetrafluoroethylene) or FEP (fluorinated ethylene propylene) to provide a smooth surface for the advancement of devices through the inner lumen. An outer jacket material can provide mechanical integrity to the inner liner and may be constructed from materials such as PEBAX, thermoplastic polyurethane, polyethylene, nylon, or the like. A third layer can be incorporated that can provide reinforcement between the inner liner and the outer jacket. The reinforcement layer can prevent flattening or kinking of the inner lumen of the sheath body **222** to allow unimpeded device navigation through bends in the vasculature as well as aspiration or reverse flow. The sheath body **222** can be circumferentially reinforced. The reinforcement layer can be made from metal such as stainless steel, Nitinol, Nitinol braid, helical ribbon, helical wire, cut stainless steel, or the like, or stiff polymer such as PEEK. The reinforcement layer can be a structure such as a coil or braid, or tubing that has been laser-cut or machine-cut so as to be flexible. In another implementation, the reinforcement layer can be a cut hypotube such as a Nitinol hypotube or cut rigid polymer, or the like.

[0058] The flexibility of the sheath body **222** can vary over its length, with increasing flexibility towards the distal portion of the sheath body **222**. The variability in flexibility may be achieved in various ways. For example, the outer jacket may change in durometer and/or material at various sections. A lower durometer outer jacket material can be used in a distal section of the sheath compared to other sections of the sheath. Alternately, the wall thickness of the jacket material may be reduced, and/or the density of the reinforcement layer may be varied to increase the flexibility. For example, the pitch of the coil or braid may be stretched out, or the cut pattern in the tubing may be varied to be more flexible. Alternately, the reinforcement structure or the materials may change over the length of the sheath body **222**. In an implementation, the distal-most section has a flexural stiffness (E*I) in the range 50 to 300 N-mm2 and the remaining portion of the sheath body **222** has a flexural stiffness in the range 500 to 1500 N-mm2 , where E is the elastic modulus and I is the area moment of inertia of the device. In another implementation, there is a transition section between the distal-most flexible section and the proximal section, with one or more sections of varying flexibilities between the distal-most section and the remainder of the sheath body **222**. In this implementation, the distal-most section is about 2 cm to about 5 cm, the transition section is about 2 cm to about 10 cm and the proximal section takes up the remainder of the sheath length.

[0059] The tip of the sheath body **222** may include one or more distal radiopaque markers **224** (see FIG. **1**). In an implementation, the radiopaque tip marker **224** is a metal band, for example platinum iridium alloy, embedded near the distal end of the sheath body **222**. Alternately, the access sheath tip material may be a separate radiopaque material, for example a barium polymer or tungsten polymer blend. The distal region of the sheath body **222** is also the area of the overlap region **120** that allows a seal between the catheter **320** and the sheath body **222**, creating a continuous aspiration lumen. Thus, the outer diameter of the luminal portion **322** of the aspiration catheter **320** approaches the inner diameter of the distal region of the sheath body **222** lumen **223** such that a seal is formed. The relative location of the seal formed may vary depending on where the aspiration catheter **320** exits the lumen **223** of the sheath body **222** and the location of the openings from the sheath body **222**, as described in more detail below. For example, if the sheath body **222** has an opening at the distal tip the location of the seal may be closer to the distal end of the sheath body **222** compared to if the sheath body **222** has one or more side openings in the distal end region of the sheath body **222** through which the catheter **320** exits the lumen **223**.

[0060] Referring again to FIG. **1**, the access sheath **220** also can include a connector **226** that connects a proximal end of the sheath body **222** to the proximal hemostasis valve **234**, and also provides a connection to the aspiration line **230**. This connector **226** can have a large bore inner lumen, and connects to a large-bore aspiration line **230**. In an implementation, the inner lumen of the connector **226** is at least 0.080". In an implementation, the inner lumen of the aspiration line **230** is at least 0.080". The aspiration line **230** can terminate in a stopcock, female Luer connector, or other connector **232** that allows connection to an aspiration

source. In an implementation, the aspiration source is an active aspiration source such as a syringe or a pump. In another implementation, the aspiration source is a reverse flow shunt line such as that described in U.S. Pat. No. 8,157,760 and US Patent Publication Number 2010/0217276, which are both incorporated by reference. The large bore aspiration line **230** can be constructed to be resistant to collapse. For example, the aspiration line **230** can be a thick-walled polymer tubing or a reinforced polymer tubing. The aspiration line valve **232** enables the line **230** to be opened or closed. In one implementation, the valve **232** also allows connection of one or more additional fluid lines, for connecting a forward drip or a flush line for contrast or saline injections. As an example, the valve **232** may be a stopcock manifold commonly used in interventional procedures to allow multiple connections. The connector **226** may also include means to secure the access sheath **220** to the patient to reduce the risk of sheath dislodgement during the case. For example, the connector **226** may include one or more suture eyelets **233**.

[0061] With reference still to FIG. **1**, the proximal end of the access sheath **220** can terminate in a proximal hemostasis valve **234**. This valve **234** allows the introduction of devices through the sheath **220** into the vasculature, while preventing or minimizing blood loss and preventing air introduction into the access sheath **220**. The hemostasis valve **234** can include a flush line **236** or a connection to a flush line **236** so that the sheath **220** can be flushed with saline or radiopaque contrast during the procedure as desired. The flush line **236** can also be used as a second point of aspiration during portions of the procedure as described more fully below. The hemostasis valve **234** can be a static seal-type passive valve, or an adjustable-opening valve such as a Tuohy-Borst valve or rotating hemostasis valve (RHV). The hemostasis valve **234** can be integral to the access sheath **220**, or the access sheath **220** can terminate on the proximal end in a female Luer adaptor to which a separate hemostasis valve **234** component, such as a passive seal valve, a Tuohy-Borst valve or rotating hemostasis valve may be attached. In an implementation, the valve **234** has an adjustable opening that is open large enough to allow removal of devices that have adherent clot on the tip without causing the clot to dislodge at the valve **234** during removal. Alternately, the valve **234** is removable and is removed when the catheter tip is being removed from the sheath **220** to prevent clot dislodgement at the valve **234**.

[0062] Referring again to FIG. **1**, the arterial sheath system **200** can include one or more sheath dilators **250** and a sheath guidewire **270**. The sheath guidewire **270** can be inserted first into the artery using standard vascular access techniques such as a micropuncture technique or Modified Seldinger technique. The sheath dilator **250** allows for smooth insertion of the access sheath **220** through a puncture site in the arterial wall. The dilator **250** can be inserted into the access sheath **220** and then the two components can be inserted together over the sheath guidewire **270** into the artery The distal end **256** of the dilator **250** can be generally tapered to allow the dilator **250** to dilate the needle puncture site as it is being inserted through the arterial wall into the artery. The tapered distal end **256** can be generally between 6 and 12 degrees total included angle (relative to a longitudinal axis of the dilator), with a radiused leading edge.

[0063] An inner lumen of the dilator **250** can accommodate the sheath guidewire **270**, and can have an inner diameter of between 0.037" to 0.041" to correspond to a sheath guidewire **270** of between 0.035" to 0.038". Alternately, the inner lumen of the dilator **250** can be between 0.020" to 0.022" to accommodate a sheath guidewire **270** of between 0.014" to 0.018". Alternately, the dilator **250** can be a two part dilator with an inner dilator and an outer dilator. The outer dilator can have an inner diameter of between 0.037" to 0.041", and the inner dilator can have an inner diameter of between 0.020" to 0.022". In use, the sheath **220** can be inserted into the artery with the outer dilator with a sheath guidewire **270** between 0.035" and 0.038". The sheath guidewire **270** may then be removed and replaced with the inner dilator and a smaller guidewire of between 0.014" and 0.018", and the access sheath **220** can then be advanced further distally to the desired site in the carotid artery.

[0064] To insert the arterial sheath **220** initially over the sheath guidewire **270** into the artery, the dilator taper **256** can have a certain stiffness and taper angle to provide the adequate dilating force on the arterial puncture site. However, to safely reach the petrous portion of the ICA, it may be desirable to have a sheath dilator **250** with a softer and/or longer taper at a distal end than that used for initial arterial access. In an implementation, the access sheath system **200** can include two or more tapered dilators. The first tapered dilator can be used with the arterial access device to gain entry into the artery, and is thus sized and constructed in a manner similar to standard introducer sheath dilators. Example materials that may be used for the tapered dilator include, for example, high density polyethylene, 72D PEBAX, 90D PEBAX, or equivalent stiffness and lubricity material. A second tapered dilator may be supplied with a softer distal section or a distal section that has a lower bending stiffness relative to the distal section of the first tapered dilator, and/or a longer taper length. That is, the second dilator has a distal region that is softer, more flexible, or articulates or bends more easily than a corresponding distal region of the first dilator. The distal region of the second dilator thus bends more easily than the corresponding distal region of the first dilator. In an implementation, the distal section of the first dilator has a bending stiffness in the range of 50 to 100 N-mm2 and the distal section of the second dilator has a bending stiffness in the range of 5 to 15 N-mm2. The second dilator (which has a distal section with a lower bending stiffness) may be exchanged with the initial, first dilator such that the access sheath **220** may be advanced into the internal carotid artery and around curvature in the artery without undue force or trauma on the vessel due to the softer distal section of the second dilator.

[0065] The distal section of the soft, second dilator may be, for example, 35 or 40D PEBAX, with a proximal portion made of, for example 72D PEBAX. An intermediate mid portion or portions may be included on the second dilator to provide a smooth transition between the soft distal section and the stiffer proximal section. In an implementation, both dilators have an inner diameter of between 0.037" to 0.041". In an alternate implementation, the first dilator has an inner diameter of between 0.037" to 0.041" and the second dilator has an inner diameter of between 0.020" to 0.022". In yet another implementation, the second dilator is a two part dilator with an inner dilator and an outer dilator, as described above. In an implementation, one or both dilators may have radiopaque tip markers **224** so that the dilator tip position is visible on fluoroscopy. In one variation, the radiopaque

marker **224** is a section of tungsten loaded PEBAX or polyurethane that is heat welded to the distal tip of the dilator. Other radiopaque materials may similarly be used to create a radiopaque marker **224** at the distal tip.

[0066] In an implementation, the access sheath **220** includes a proximal extension **240** that extends between the connector **226** and the proximal hemostasis valve **234**. In the transcarotid configuration of the system, it may be desirable to move the proximal hemostasis valve **234** away from the distal tip of the access sheath **220**, effectively elongating or lengthening the proximal portion of the access sheath that is outside the body while maintaining the length of the insertable sheath body portion **222**. This allows the user to insert devices into the proximal hemostasis valve **234** of the access sheath **220** from a point further away from the target site and therefore away from the x-ray source and/or image intensifier used to image the target site fluoroscopically, thereby minimizing radiation exposure of the user's hands and also his or her entire body. In this implementation, the proximal extension **240** can be in the range between 10 and 25 cm, or between 15 and 20 cm. In either the transcarotid or transfemoral configuration, it may also be desirable to provide a section of the access sheath **220** that is fluidly connected to the access sheath aspiration line, but which may extend proximally from the aspiration line connection. This will allow users to pull devices out of the flow of blood from the sheath tip to the aspiration line, without completely removing the device from the access sheath **220**.

[0067] In an alternate implementation, it may also be desirable to intermittently isolate this proximal portion **240** from the sheath body **222**. In an implementation, as shown in FIG. **4**, the connector **226** includes a valve **242** that can close off the fluid connection between the sheath body **222** and the proximal portion **240** of the access sheath **220**, including the aspiration line **230**, proximal extension **240** and proximal hemostasis valve **234**. This can allow the distal portion of a catheter, retrievable stent device, or other thrombectomy device to be pulled into this proximal extension portion **240**, the valve **242** closed to fluidly isolate the sheath body **222** from the proximal portion of the sheath, and then the proximal hemostasis valve **234** to be widely opened or removed, or the entire proximal extension portion **240** of the sheath **220** removed, without arterial bleeding from the sheath **220**. The proximal extension **240** can be at least as long as the distal luminal portion **222** of the spined catheter **320** so that the distal luminal portion **322** may be pulled entirely into the proximal extension **240** and the valve **242** closed off before the proximal hemostasis valve **234** is widely opened to remove the catheter **320** entirely from the sheath **220**.

[0068] Alternately, after the thrombectomy device or other interventional device is pulled into this proximal extension portion **240** and the sheath body **222** closed off via the valve **242**, a portion of the thrombectomy device, such as the distal luminal portion **322** of the aspiration catheter **320**, may remain in the proximal extension **240** and be flushed or otherwise cleared by creating flow from the flush line to the aspiration lines to dislodge clot without fully removing the device **320** from the access sheath **220**. This ability to flush and clear the thrombectomy device without fully removing the thrombectomy device may reduce bleeding, time, and risk of air emboli during the steps between thrombectomy attempts. Also, withdrawing the thrombectomy device into the proximal extension **240** without fully removing it from the sheath body **222** while flushing and clearing also minimizes operator and staff exposure to blood and debris associated with device cleansing. In any of these implementations, the proximal extension tubing is clear so that the flush solution and presence/absence of embolic debris or air is clearly visible through the tubing.

[0069] The proximal extension portion **240** of the access sheath **220** can be provided as a separate, removable component that can be attached to any sheath with a standard connection on the proximal end. As shown in FIG. **5**, a proximal component **280** includes a connector **285** that can attach to a proximal hub **15** of a standard sheath **10**. The coupled components can create an assembly with the configuration and features of access sheath **220**. In this implementation, the user can select from any of several already available sheaths of appropriate length, shape, and mechanical characteristics for the procedure, and perform the steps of the procedure described in this disclosure. The removable proximal component **280** can include the Y-arm connector **226**, aspiration line **230**, proximal extension **240**, proximal hemostasis valve **234** and flush line **236**, along with the valve connectors **232** and **238** terminating the aspiration line **230** and flush line **236** respectively. A connector **285** can couple to the proximal connector **226** on the sheath **220**. In an implementation as shown in FIG. **6**, the connector **285** is configured to minimize the flow resistance through the sheath **10** and into the proximal portion **280**. For example, instead of a standard male-female Luer connection, the connector **285** can include an adaptor **60** with an inner lumen and surface that matches a standard female Luer connector **62** typically found on sheaths, a seal element **64** that seals between the adaptor **60** and the sheath female Luer **62**, and a rotating nut **66** that engages the thread elements of the female Luer **62** and couples the adaptor **60** and Luer **62** together such that the seal **64** is compressed and can seal against fluid and air vacuum and pressure. Again with respect to FIG. **5**, the proximal component **280** may also include a valve **242** on the Y-arm connector **226**, so that when the proximal component **280** is attached to a sheath **10**, the proximal section may be selectively open or closed to fluid connection with the sheath **10**. A similar type of connection can be made for connector **232** connecting the sheath aspiration line **230** to an aspiration source.

[0070] In a preferred implementation, the proximal connection has a proximal extension length of about 22 cm, a Y-arm connector of about 7 cm, and a proximal hemostasis valve of length about 5 cm for a total length of about 34 cm.

[0071] It may be desirable to transiently occlude the carotid artery during the intervention to arrest antegrade flow of emboli during portions of the procedure. In an implementation, as shown in FIG. **7**, the access sheath **220** includes an occlusion balloon **246** on the distal tip of the sheath body **222**. An additional lumen in sheath body **222** can be connected to an inflation line **248** and fluidly connects the balloon **246** to the inflation line **248**. An inflation device is attached to inflation line **248** to inflate the occlusion balloon **246**. In this implementation, the balloon **246** is inflated when carotid artery occlusion is desired.

[0072] In some instances it is desirable to keep the sheath tip as small as possible during sheath insertion to minimize the diameter of the arterial puncture, but to expand the opening of the sheath **220** after it has been inserted into the vessel. At least one purpose of this feature is to minimize the effect or creation of distal emboli during pull back of an

aspiration catheter **320** or other thrombectomy device into the sheath **220**. During a thrombectomy procedure, the thrombus may be "pulled back" into a distal opening **221** of the sheath **220** on a device that has captured the thrombus. If the distal tip of the sheath **220** is enlarged relative to its initial size, or flared into a funnel shape, the chance of pieces of the thrombus breaking off and causing emboli is minimized because the larger size or funnel shape of the sheath tip is more likely to accommodate the emboli being drawn into it without being split into multiple pieces. This creates a better clinical outcome for the patient. In an implementation of the access sheath, the distal portion of the sheath body **222** is a material and/or construction such that the tip can be expanded after the sheath **220** is inserted into the artery and positioned in its desired location. In an implementation, the distal region of the sheath has an ID of about 0.087" can be enlarged to a diameter of about 0.100" to 0.120" although the size may vary and/or be flared.

[0073] Examples of expanding distal tip constructions include covered braided tips that can be shortened to expand. Another example of an expanding distal tip construction is an umbrella or similar construction that can open up with mechanical actuation or elastic spring force when unconstrained. Other mechanisms of expandable diameter tubes are well known in the art. One particular implementation is a sheath made of material that is deformable when expanded using a high pressure balloon. Co-pending U.S. Patent Publication number 2015/0173782, filed on Dec. 19, 2014, describes exemplary devices and is incorporated herein by reference in its entirety. Construction of such features are described in co-pending Publication number 2015/0173782.

[0074] The distal end region of the sheath body **222** also may vary in the location, size and number of openings. The sheath body **222** may incorporate one or more openings near the distal end region of the sheath **220** that allow for fluid flow between the lumen **223** of the sheath body **222** and the vasculature within which the sheath **220** is positioned. The one or more openings can be sized to allow at least the luminal portion **322** of the aspiration catheter **320** to extend therethrough. The one or more openings may be sized larger than the outer diameter of the luminal portion **322** such that the one or more openings form an elongate mouth, slot or notch in a distal end region of the sheath body **222**. The one or more openings may be formed within a region of the side wall of the sheath body **222** just proximal to the distal end, such that the opening is located at least 0.25 mm, 0.5 mm, 1.0 mm, 1.5 mm, 2.0 mm, 2.5 mm, 3.0 mm, 3.5 mm, or 4.0 mm or greater from the distal end of the sheath body **222**. The one or more openings may be a plurality of openings forming a porous region near the distal end region of the sheath body **222** wherein at least one of the pluralities of openings is sized large enough to allow one or more components of the system to exit the lumen **223** of the sheath body **222**. In some implementations, the one or more openings includes a distal opening **221** from the lumen **223** of the sheath body **222** (see FIGS. **4** and **12**C). In some implementations, the one or more openings includes an elongate, distal mouth forming a side opening **1219** on a first side of the sheath body **222** located near a distal end region (see FIG. **12**C). The side opening **1219** may be located at least **0.25** mm or more from the distal end of the sheath body **222**. The side opening **1219** may having a diameter that is at least as large as the outer diameter of the distal luminal portion **322** of the spined catheter **320**. Preferably, the side opening **1219** has a diameter that is at least 1.5×, 2×, 2.5×, or 3× as large as the outer diameter of the distal luminal portion **322**. In another implementation, the sheath body **222** includes a pair of side openings **1219** on opposing and/or adjacent sides of the sheath body **222** near the distal end region. In another implementation, the sheath body **222** includes a distal opening **221** from the lumen **223** and one or more elongate side openings **1219** from the lumen **223**. It should be appreciated that the sheath body **222** can be rotated around the longitudinal axis A such that the one or more side openings **1219** are positioned to allow for distal extension of the catheter **320** from the side openings **1219** in a desired direction relative to the longitudinal axis A of the sheath **220**. Inclusion of a wide-mouthed side opening **1219** can allow for a range of exit angles for the catheter **320** from a position substantially (i.e. very nearly) parallel to the sheath body **222** to a position that is at an angle to the sheath body **222**, for example substantially perpendicular or at a right angle to the sheath body **222**, as well as greater than 90° angle. This arrangement can be critically important in situations where there is severe angulation within the vessel being traversed or where a bifurcation is present. Often, tortuous segments in vessels and bifurcations have severe angulations to 90° or greater angle up to 180°. Classic severe angulation points in the vasculature can include the aorto-iliac junction, the left subclavian artery takeoff from the aorta, the brachiocephalic (innominate) artery takeoff from the ascending aorta as well as many other peripheral locations.

[0075] Referring again to FIG. **1**, as mentioned above the catheter system **300** can include a spined aspiration catheter **320** having a flexible, distal luminal portion **322** and a rigid, proximal spine **330**. The outer diameter of the distal luminal portion **322** as well as the flexibility and lubricity of the luminal portion **322** paired with the rigid spine **330** allow for the spined aspiration catheter **320** to navigate to the site of occlusions in the cerebral vasculature compared to other systems configured to navigate the cardiac vasculature. The systems described herein can reach occlusions in a region of the anatomy that has a long, tortuous access route. The route may contain stenosis plaque material in the aortic arch and carotid and brachiocephalic vessel origins, presenting a risk of embolic complications. Further, cerebral vessels are usually more delicate and prone to perforation than coronary or other peripheral vasculature. The catheter systems described herein can provide for neurovascular interventional procedures more easily due to its ability to overcome these access challenges. The catheter systems described herein are designed for navigating tortuosity rather than pushing through it. U.S. Patent Publication Number 2015/0174368, filed on Dec. 12, 2014, and U.S. Patent Publication Number 2015/0173782, filed on Dec. 19, 2014, which are incorporated herein by reference, describe features of catheter devices that can navigate the tortuous anatomy of the cerebral arteries.

[0076] The length of the distal luminal portion **322** can vary. In some implementations, the length of the distal luminal portion **322** extends from a region near the distal tip of the access sheath body **222** to the site of the occlusion in the carotid artery, forming a proximal overlap region **120** with the distal end of the access sheath **220** (see FIG. **2**B). Taking into account the variation in occlusion sites and sites where the access sheath distal tip may be positioned, the length of the distal luminal portion **322** may range from about 10 cm to about 25 cm. The length of the distal luminal

portion **322** is less than the length of the sheath body **222** of the access sheath **220**, such that as the spined aspiration catheter **320** is retracted into the sheath body **222** there remains a seal between the overlap region **328** of the spined aspiration catheter **320**, and the inner diameter of the sheath body **222**.

[0077] The catheter systems described herein can incorporate multiple spined catheters that are nested inside one another to allow for an extended reach into the tortuous anatomy. For example, a first spined catheter **320** having an outer diameter sized to be received within the lumen of the sheath body **222** may have a second spined catheter **320** extending through the inner lumen of the first spined catheter **320**. The second spined catheter **320** can be extended using its proximal spine beyond a distal end of the first spined catheter **320** such that the smaller diameter second spined catheter **320** can reach a more distal region of the vasculature, particularly one having a narrower dimension. In this implementation, the first spined catheter **320** can act as a support catheter for the second spined catheter **320**. The second spined catheter **320** can have an inner lumen that fluidly communicates with the inner lumen of the first spined catheter **320** that fluidly communicates with an inner lumen of the sheath body **222** forming a contiguous aspiration lumen.

[0078] In an implementation, the distal luminal portion **322** of the catheter **320** is constructed to be flexible and lubricious, so as to be able to be safely navigated to the target site, and kink resistant and collapse resistant when subjected to high aspiration forces, so as to be able to effectively aspirate the clot, with sections of increasing flexibility towards the distal end. In an implementation, the distal luminal portion **322** includes three or more layers, including an inner lubricious liner, a reinforcement layer, and an outer jacket layer. The outer jacket layer may be composed of discreet sections of polymer with different durometers, composition, and/or thickness to vary the flexibility along the length of the distal luminal portion **322**. In an implementation the lubricious inner liner is a PTFE liner, with one or more thicknesses along variable sections of flexibility. In an implementation, the reinforcement layer is a generally tubular structure formed of, for example, a wound ribbon or wire coil or braid. The material for the reinforcement structure may be stainless steel, for example **304** stainless steel, nitinol, cobalt chromium alloy, or other metal alloy that provides the desired combination of strengths, flexibility, and resistance to crush. In an implementation, the reinforcement structure includes multiple materials and/or designs, again to vary the flexibility along the length of the distal luminal portion **322**. In an implementation, the outer surface of the catheter **320** is coated with a lubricious coating such as a hydrophilic coating. In some implementations the coating may be on an inner surface and/or an outer surface to reduce friction during tracking. The coating may include a variety of materials as is known in the art. The spine portion **330** may also be coated to improve tracking through the access sheath **220**. Suitable lubricious polymers are well known in the art and may include silicone and the like, hydrophilic polymers such as high-density polyethylene (HDPE), polytetrafluoroethylene (PTFE), polyarylene oxides, polyvinylpyrolidones, polyvinylalcohols, hydroxy alkyl cellulosics, algins, saccharides, caprolactones, and the like, and mixtures and combinations thereof. Hydrophilic polymers may be blended among themselves or with formulated amounts of water insoluble compounds (including some polymers) to yield coatings with suitable lubricity, bonding, and solubility.

[0079] The outer diameter of the distal luminal portion **322** can be sized for navigation into cerebral arteries. It is desirable to have a catheter having an inner diameter that is as large as possible that can be navigated safely to the site of the occlusion, in order to optimize the aspiration force. A suitable size for the inner diameter may range between 0.040" and 0.075" or may range between 0.040" and 0.088", depending on the patient anatomy and the clot size and composition. The outer diameter should be as small as possible while still maintaining the mechanical integrity of the catheter **320**. However, at the overlap region **120**, the outer diameter (OD) of the catheter **320** approaches the inner diameter (ID) of the access sheath **220**, so as to create a sealed area at the overlap region **120** whilst still enabling the catheter **320** to be inserted easily through the sheath **220** and positioned at the desired site. In an implementation, the catheter **320** and access sheath **220** are sized to match at the overlap region **120** with no change in catheter **320** outer diameter (see FIG. **2**B). In an implementation, the difference between the catheter OD and the access sheath ID at the overlap region is 0.002" or less. In another implementation, the difference is 0.003" or less. In an implementation, the catheter **320** is tapered towards the distal tip of the distal luminal portion **322** such that the distal-most end of the catheter has a smaller outer diameter compared to a more proximal region of the catheter near where it seals with the access sheath. In another implementation, the catheter OD steps up at an overlap portion **328** to more closely match the sheath inner diameter (see FIG. **1**). This implementation is especially useful in a system with more than one catheter suitable for use with a single access sheath size. It should be appreciated where the catheter OD of the spined catheter **320** matches the sheath inner diameter or the difference is 0.002" or less, a seal to fluid being injected or aspirated can be achieved by the overlap portion **328** such that no increase in catheter OD is necessary. A seal to fluid being injected or aspirated between the catheter and the sheath can be achieved by the overlap between their substantially similar dimensions without incorporating any separate sealing structure or seal feature.

[0080] In another implementation as shown in FIG. **8**A and **8**B, there is a sealing element **336** positioned on the external surface of the proximal end of the distal luminal portion **322**. The sealing element **336** can be one or more external ridge features, and can be compressed when the catheter **320** is inserted into the lumen of the access sheath **220**. The ridge geometry can be such that the sealing element **336** behaves as an O-ring, quad ring, or other piston seal design. FIG. **8**B shows a similar configuration, with the sealing element **336** having a wiper seal configuration such as an inclined surface that is biased against an inner surface of access sheath body **222**. Alternately, the seal element **336** may be an inflatable or expandable member such as a balloon or covered braid structure that can be inflated or expanded and provide sealing between the two devices at any time, including after the catheter **320** is positioned at the desired site. An advantage to this implementation is that there is no sealing force being exerted on the catheter **320** during catheter positioning, but rather is applied or actuated to seal after the catheter **320** is positioned.

[0081] It should be appreciated that the shape of the proximal end region of the distal luminal portion **322** may have an angled cut compared to the straight cut shown in the FIGS. **8**A-**8**B. It should also be appreciated that the spine **330** may be coupled to a proximal end region of the catheter **320** and/or may extend along at least a portion of the distal luminal portion **322** such that the spine **330** couples to the distal luminal portion **322** a distance away from the proximal end. The spine **330** can be coupled to the portion **322** by a variety of mechanisms including bonding, welding, gluing, sandwiching, stringing, tethering, or tying one or more components making up the spine **330** and/or portion **322**. In some implementations, the spine **330** and luminal portion **322** are coupled together by sandwiching the spine **330** between layers of the distal luminal portion **322**. For example, the spine **330** can be a hypotube or rod having a distal end that is skived, ground or cut such that the distal end can be laminated or otherwise attached to the layers of the catheter portion **322** near a proximal end region. The region of overlap between the distal end of the spine **330** and the portion **322** can be at least about 1 cm. This type of coupling allows for a smooth and even transition from the spine **330** to the luminal portion **322**.

[0082] In an implementation, the overlap region is configured to enable sealing against a vacuum of up to 25 inHg, or up to 28 inHg. In an implementation, the overlap region **120** is configured to enable sealing against a pressure of up to 300 mmHg or up to 600 mmHg or up to 700 mmHg with minimal to no leakage. In addition, there may be features that prevent excessive advancement of the spined aspiration catheter **320** beyond the distal end of the access sheath **220**. In any implementation that involves a stepped up diameter or protruding feature at the overlap region **328** of the spined aspiration catheter **320**, the access sheath body **222** may include an undercut at the tip that prevents the proximal overlap portion of the spined aspiration catheter **320** to exit the sheath body **222**.

[0083] The distal luminal portion **322** of the catheter **320** can have a radiopaque marker **324** at the distal tip to aid in navigation and proper positioning of the tip under fluoroscopy (see FIG. **1**). Additionally, the proximal overlap region **328** of the catheter **320** may have one or more proximal radiopaque markers **1324** (see FIG. **12**C) so that the overlap region **120** can be visualized as the relationship between the access sheath distal marker **224** and the catheter proximal marker **1324**. In an implementation, the two markers (marker **324** at distal tip and a more proximal marker **1324**) are distinct so as to minimize confusion of the fluoroscopic image, for example the catheter proximal marker **1324** may be a single band and the sheath tip marker **224** may be a double band.

[0084] The spine **330** of the spined aspiration catheter **320** is coupled to a proximal end region of the distal luminal portion **322**. The spine **330** is configured to allow distal advancement and proximal retraction of the catheter **320** through the lumen **223** of the access sheath **220**. In an implementation, the length of the spine **330** is longer than the entire length of the access sheath **220** (from distal tip to proximal valve), such as by about 5 cm to 15 cm. As shown in FIG. **1**, the spine **330** can include a mark **332** to indicate the overlap between the distal luminal portion **322** of the catheter **320** and the sheath body **222**. The mark **332** can be positioned so that when the mark **332** is aligned with the sheath proximal valve **234** during insertion of the catheter **320** through the sheath **220**, the spined aspiration catheter **320** is positioned at the distal-most position with the minimal overlap length needed to create the seal between the spined aspiration catheter **320** and the access sheath **220**. The spine **330** can include a gripping feature such as a tab **334** on the proximal end to make the spine easy to grasp and advance or retract. The tab **334** can coupled with one or more other components of the system **300**, such as a dilator configured to extend through the lumen **323** of the distal luminal portion **322** as will be described in more detail below. The proximal tab **334** can be designed to be easily identifiable amongst the other devices existing in the sheath proximal valve **234**, such as guidewires **270** or retrievable stent device wires **500**. In an implementation, the spine **330** is colored a bright color, or marked with a bright color, to make it easily distinguishable from guidewire, retrievable stent tethers, or the like.

[0085] The spine **330** can be configured with sufficient stiffness to allow advancement and retraction of the distal luminal portion **322** of the spined aspiration catheter **320**, yet also be flexible enough to navigate through the cerebral anatomy as needed. Further, the outer diameter of the spine **330** is sized to avoid taking up too much luminal area in the lumen **223** of the access sheath **220** and sheath body **222**. In an implementation, the spine **330** is a round wire, with dimensions from 0.014" to 0.018". In another implementation, the spine **330** is a ribbon with dimensions ranging from 0.010" to 0.015" thick, and 0.015" thick to 0.025" thick. The ribbon can have a variety of cross-sectional shapes such as a flat ribbon or curved ribbon forming a c-shape or other shape along an arc. In another implementation, the spine **330** is a hypotube. In an implementation, the spine **330** material is a metal such as a stainless steel or nitinol as well as a plastic such as any of a variety of polymers.

[0086] One or more components of the systems described herein may be made from a metal, metal alloy, polymer, a metal-polymer composite, ceramics, combinations thereof, and the like, or other suitable materials. Some examples of suitable metals and metal alloys include stainless steel, such as 304V, 304L, and 316LV stainless steel; mild steel; nickel-titanium alloy such as linear-elastic and/or super-elastic nitinol; other nickel alloys such as nickel-chromium-molybdenum alloys (e.g., UNS: N06625 such as INCONEL® 625, UNS: N06022 such as HASTELLOY® C-22®, UNS: N10276 such as HASTELLOY® C276®, other HASTELLOY® alloys, and the like), nickel-copper alloys (e.g., UNS: N04400 such as MONEL® 400, NICKELVAC® 400, NICORROS® 400, and the like), nickel-cobalt-chromium-molybdenum alloys (e.g., UNS: R30035 such as MP35-N® and the like), nickel-molybdenum alloys (e.g., UNS: N10665 such as HASTELLOY® ALLOY B2®), other nickel-chromium alloys, other nickel-molybdenum alloys, other nickel-cobalt alloys, other nickel-iron alloys, other nickel-copper alloys, other nickel-tungsten or tungsten alloys, and the like; cobalt-chromium alloys; cobalt-chromium-molybdenum alloys (e.g., UNS: R30003 such as ELGILOY®, PHYNOX®, and the like); platinum enriched stainless steel; titanium; combinations thereof; and the like; or any other suitable material.

[0087] The junction between the distal luminal portion **322** of the catheter **320** and the proximal spine **330** can be configured to allow a smooth transition of flexibility between the two portions so as not to create a kink or weak point, and also allow smooth passage of devices such as

guidewires and microcatheters through the continuous inner lumen created by the lumen **223** of the access sheath **220** and the lumen **323** of the luminal portion **322** of the catheter **320**. In an implementation, the distal luminal portion **322** has a transition section **326** (see FIG. **1**) near where the portion **322** couples to the spine **330** that has an angled cut such that there is no abrupt step transition from the sheath **220** inner lumen **223** to the catheter **320** inner lumen **323**. The angled cut can be generally planer. In an alternate implementation, the angled cut is curved or stepped to provide a more gradual transition zone. The distal luminal portion **322** and the spine **330** may be joined by a weld bond, a mechanical bond, an adhesive bond, or some combination thereof. The distal end of the spine **330** may have features that facilitate a mechanical joint during a weld, such as a textured surface, protruding features, or cut-out features. During a heat weld process, the features would facilitate a mechanical bond between the polymer distal luminal portion **322** and the spine **330**. In another implementation, such as the catheter system **1300** shown in FIGS. **12**A-**12**B having a spined catheter **1320** and a dilator **1340** extending therethrough, a smooth transition of flexibility between the two portions is formed so as not to kink or create a weak point during advancement of the system **1300**. Loss of this smooth flexibility transition can occur upon removal of the dilator **1340** from the spined catheter **1320**. The spine **1330** can be intended primarily to withdraw the spined catheter **1320** where risk of kink or weak spot formation is markedly lower.

[0088] Because the spined aspiration catheter **320** does not have a lumen that runs its entire length **320** due to the presence of the spine **330** on its proximal end region, traditional flushing and preparation steps, either before use or during the procedure should the lumen of the catheter become clogged, are ineffective. In a traditional single lumen catheter, a syringe is attached to the proximal adaptor of the catheter and the inner lumen may be forcefully flushed with solution. The spined catheter **320** can be supplied with an accessory catheter flushing and clearing device **350** (see FIG. **1**). This device **350** may be a tube with a rounded or tapered tip on a distal end and a female Luer connection on the proximal end. The Luer connector allows a syringe to be connected to the device **350**. The blunt or tapered tip enables the device **350** to be inserted into either the distal or proximal end of the luminal portion **322** of the catheter **320**, without risk of damaging the catheter **320**, and the syringe actuated to flush the device. The OD of the clearing device **350** is closely matched with the ID of the luminal portion **322** of the spined catheter **320**, such that the spined aspiration catheter **320** may be flushed with enough force to clear out the catheter of debris and aspirated occlusive material. The device **350** may also be used to mechanically clear out any entrapped thrombus in a plunger-type action, the working length of the device **350** can be at least as long as the distal luminal portion **322** of the catheter **320**, so that it may be inserted through the entire lumen **323** of the distal luminal portion **322**. Flushing may occur in conjunction with plunging the device **350**, to more effectively clear the catheter **320** of entrapped thrombus or other embolic material.

[0089] In an alternate implementation, the aspiration catheter **320** is a single lumen catheter, for example, the type of catheter described in co-pending application U.S. Patent Publication Number 2015/0174368, filed Dec. 12, 2014. In such an implementation, the catheter may be supplied with or coupled with a tapered co-axial dilator **340** that is generally tubular and has a tapered distal portion that provides a smooth transition between the catheter and a guidewire positioned within the catheter.

[0090] The spined aspiration catheter **320** can be navigated through the vasculature over an appropriately-sized microcatheter and guidewire. Alternately, the spined catheter **320** can be supplied with a co-axial dilator **340** (see FIG. **1**). The dilator **340** is sized and shaped to be inserted through the internal lumen **323** of the distal luminal portion **322** of the catheter **320** in a coaxial fashion, such that a proximal end region of the dilator **340** aligns side-by-side with the spine **330** of the catheter **320** when in use. The dilator **340** can have a tapered distal tip **346**. The length of the dilator **340** can be at least as long as the spined aspiration catheter **320** allowing for the distal tapered tip **346** as a minimum to protrude from the distal end of the luminal portion **322** of the spined catheter **320**. The dilator **340** can have an outer diameter that forms a smooth transition to the distal tip of the catheter, and the distal tapered tip **346** that provides a smooth transition down to the guidewire that extends out the inner lumen of the dilator **340**. The dilator **340** can be generally tubular along at least a portion of its length. In an implementation, the tapered dilator **340** is designed to accommodate a guidewire that may be in the range of 0.014" and 0.018" diameter for example. In this implementation, the inner luminal diameter may be between 0.020" and 0.024". The tapered distal tip **346** may be in range from 1.5 cm to 3 cm.

[0091] It should be appreciated that the dilators described herein for use with the spined catheters can vary in their configuration. For example, as described above the dilator **340** can be a co-axial dilator **340** that is generally tubular and has a tapered distal portion that provides a smooth transition between the catheter **320** and a guidewire positioned within the catheter **320**. The tubular body of the dilator **340** can extend along the entire length of the catheter **320**. Alternatively, the dilator **340** can incorporate a proximal spine that aligns side-by-side with the spine of the catheter **320**. The proximal spine can be positioned co-axial or eccentric to a distal end region of the dilator **340**. The co-axial proximal spine of the dilator **340** can have a lumen extending through it. Alternatively, the dilator **340** can be a solid rod having no lumen. The solid rod dilator can be formed of a malleable material that skives down to have a narrow outer diameter (e.g. 0.010"-0.014") such that the dilator can be shaped to whatever angle or shape is desired by the user, similar to how a guidewire may be used. In this configuration, the catheter system does not include a guidewire or microcatheter. Such a dilator has a benefit over a microcatheter in that it can have an outer diameter that is 0.003"-0.010" smaller than the inner diameter of the spined catheter **320**.

[0092] The dilator **340** may have a proximal female Luer adaptor **348** at a proximal end to allow the dilator **340** to be flushed with a syringe. The dilator **340** may also incorporate a clip feature at a proximal end allowing the dilator **340** to be the material of the dilator **340** can be flexible enough and the taper distal tip **346** can be long enough to create a smooth transition between the flexibility of the guidewire and the flexibility of the catheter. This configuration can facilitate advancement of the catheter **320** through the curved anatomy and into the target cerebral vasculature. In an implementation, the distal end of the dilator **340** has a radiopaque marker **344** and/or a marker **343** at the proximal end of the taper distal tip **346**. The marker material may be

a platinum/iridium band, a tungsten, platinum, or tantalum-impregnated polymer, or other radiopaque marker.

[0093] The dilator **340** can be constructed to have variable stiffness between the distal and proximal ends of the dilator **340**. For example, the distal most section that extends beyond the distal end of the luminal portion **322** of the catheter **320** can be made from a more flexible material, with increasingly stiffer materials towards the more proximal sections. In some implementations, the dilator **340** can be a spined dilator having a proximal spine as will be described in more detail below. The proximal end of the dilator **340** can include a tab **1364** that allows the dilator **340** to lock with the tab **334** on the proximal end of the spine **330** of the catheter **320**, such that the two components (the spined catheter **320** and the dilator **340**) may be advanced as a single unit over the guidewire (see FIG. **12**A). In some implementations, the tab **334** of the catheter **320** can form a ring having a central opening extending therethrough. The tab **1364** of the dilator **340** can have an annular detent with a central post. The central post of the tab **1364** can be sized to insert through the central opening of the tab **334** such that the ring of the tab **334** is received within the annular detent of tab **1364** forming a singular grasping element for a user to advance and/or withdraw the catheter system through the access sheath. The tab **1364** may be affixed to the dilator **340**, or may be slideable on the dilator **340** to accommodate different relative positions between the dilator **340** and the spined catheter **320**.

[0094] FIGS. **12**A-**16** provide additional views of a spined aspiration catheter and dilator system **1300** as described elsewhere herein. FIGS. **12**A-**12**B show the spined aspiration catheter **1320** having a dilator **1340** extending through an aspiration lumen **1323** of the distal luminal portion **1322**. As described elsewhere herein, the catheter **1320** can have a proximal spine **1330** having a tab **1334** and a distal luminal portion **1322** having an aspiration lumen **1323**. The spine **1330** can extend between the distal luminal portion **1322** and the tab **1334**. The dilator **1340** can be received within the aspiration lumen **1323** of the spined catheter **1320**. The dilator **1340** can include a distal dilator portion **1360** and a proximal spine **1362**. The dilator portion **1360** can extend between a distal tip **1346** of the dilator **1340** to the start of the proximal spine **1362**. When engaged with the catheter **1320**, the dilator portion **1360** of the dilator **1340** may extend through an entire length of the distal luminal portion **1322** of the catheter **1320** such that the dilator tip **1346** extends a fixed distance beyond a distal end of the distal luminal portion **1322** of the catheter **1320** providing a smooth transition for improved tracking. The dilator tip **1346** can be tapered as described elsewhere herein and can be soft, atraumatic and flexible to the vessel wall to facilitate endovascular navigation to an embolus in a tortuous anatomy compared to dilators typically used for percutaneous arterial access, which are meant to bluntly dissect through tissue and artery wall.

[0095] The dilator **1340** is shown in a locked configuration with the catheter **1320** configured for improved tracking through a tortuous and often diseased vasculature in acute ischemic stroke. The dilator portion **1360** can include one or more detents on an outer surface of the dilator portion **1360**. The detents can be located near a proximal end region and/or a distal end region of the dilator portion **1360**. The detents are configured to lock with correspondingly-shaped surface features on the inner surface of the lumen **1323** through which the dilator portion **1360** extends. The dilator **1340** can include a dilator tab **1364** on a proximal end of the proximal spine **1362** of the dilator **1340**, which as discussed above can be configured to connect and lock with a corresponding feature on the proximal end region of the catheter spine **1330**, for example via one or more detents or other surface features. Thus, the dilator **1340** and the catheter **1320** can have more than a single point of locking connection between them. The proximal spine **1362** of the dilator **1340** can extend between the dilator portion **1360** and the tab **1364** of the dilator **1340**. The dilator portion **1360** can be a tubular element as described elsewhere herein that forms a guidewire lumen running a length of the dilator portion **1360** (and an entire length of the distal luminal portion **1322** of the spined catheter **1320**). It should be appreciated that the entire dilator **1340** can be tubular element configured to receive a guidewire through the spine **1362** as well as the dilator portion **1360**. The proximal end of the dilator portion **1360**, i.e., the transition section **1326** between the dilator portion **1360** and the proximal spine **1362**, may include a "step up" to smooth the transition between the distal luminal portion **1322** of the catheter **1320** and the dilator portion **1360** of the dilator **1340**. The transition section **1326** can incorporate an angled cut such that there is no abrupt step transition from the sheath **1220** inner lumen **1223** to the catheter **1320** inner lumen **1323**. Accordingly, the spined aspiration catheter-dilator **1300** may be smooth to the vascular wall it interfaces with.

[0096] The proximal spine **1362** of the dilator **1340** may have a similar stiffness and character as the spine **1330** of catheter **1320**. More particularly, one or both of the spines **1362**, **1330** may be stiff and/or kink resistant. Furthermore, one or both of the spines **1362**, **1330** may have a stiffness to allow pushing the distal portions, i.e., the combined distal luminal portion **1322** and dilator portion **1360**, through an access sheath or a guide-sheath while producing a very low profile. In an embodiment, one or both of the spines **1362**, **1330** includes a stiff wire.

[0097] The catheter tab **1334** and the dilator tab **1364** can be removably connected with one another. More particularly, the tabs **1334**, **1364** may have a locked configuration and an unlocked configuration. In the locked configuration, the dilator tab **1364** can be engaged with the catheter tab **1334**. In the unlocked configuration, the dilator tab **1364** may be disengaged from the catheter tab **1334**. The dilator tab **1364** may attach, e.g., click or lock into, the catheter tab **1334** in a fashion as to maintain the relationships of corresponding section of the spined dilator **1340** and the spined catheter **1320** in the locked configuration. Such locking may be achieved by, e.g., using a detent on the dilator tab **1364** that snaps into place within a recess formed in the catheter tab **1334**, or vice versa. In some implementations, the spine **1330** of the spined catheter **1320** can run alongside or within a specialized channel of the dilator spine **1362**. The channel can be located along a length of the dilator spine **1362** and have a cross-sectional shape that matches a cross-sectional shape of the catheter spine **1330** such that the spine **1330** of the catheter **1320** can be received within the channel and slide smoothly along the channel bi-directionally. Once the spined catheter **1320** and spined dilator **1340** are fixed, the combined system, i.e., the spined aspiration catheter-dilator **1300** may be delivered to a target site, for example through the lumen **223** of the access sheath **220** described elsewhere herein.

[0098] Referring to FIG. **12**B, a spined aspiration catheter-dilator **1300** having a spined catheter **1320** and a spined dilator **1340** in an unlocked configuration is illustrated in accordance with an embodiment. When the spined aspiration catheter-dilator **1300** is positioned at the target site, as discussed herein, the dilator tab **1364** can be unlocked from the catheter tab **1334**. The spined dilator **1340** may be withdrawn and the spined catheter **1320** may be used, e.g., for aspiration or for wire or balloon delivery.

[0099] Referring to FIG. **13**, a cross-sectional view, taken about line A-A of FIG. **12**B, of a spined catheter **1320** coaxially aligned with a spined dilator **1340** is illustrated in accordance with an embodiment. The cross-section illustrates a portion of the catheter-dilator having the dilator portion **1360** received within the aspiration lumen **1323** of distal luminal portion **1322**. The lumen **1323** may have an inner diameter in a range up to 0.072 inches, although a larger or smaller inner diameter is possible (larger or smaller possible). The wall of the distal luminal portion **1322** may resist kinking or ovalizing to provide maximum diameter for aspiration. The dilator portion **1360** may be received in the distal luminal portion **1322** in a slip fit. Thus, in an embodiment, an outer dimension of the dilator portion **1360** may be less than the inner diameter of the distal luminal portion **1322**. For example, the lumen **1323** may have a diameter of 0.072 inches and the dilator portion **1360** may have an outer dimension of 0.070 inches.

[0100] Referring to FIG. **14**, a cross-sectional view, taken about line B-B of FIG. **12**B, of a spined catheter **1320** after removal of a spined dilator **1340** is illustrated in accordance with an embodiment. The cross-section illustrates the distal luminal portion **1322** after the dilator portion **1360** has been retracted and/or removed. The distal luminal portion **1322** has an inner wall **1321** defining the lumen **1323**. The lumen **1323** may be circular, as shown, or may have any other shape. In an embodiment, the effective diameter of the lumen **1323** ranges up to 0.072 inches.

[0101] Referring to FIG. **15**A, a spined aspiration catheter-dilator system **1300** having a spined catheter **1320** and a spined dilator **1340** in a locked configuration is illustrated in accordance with an embodiment. In an embodiment, the spine **1330** and dilator **1340** may have an outer dimension that is substantially similar over an entire length. For example, rather than converging to a smaller dimension between the dilator portion **1360** and the dilator spine **1362**, the dilator spine **1362** may have a same dimension as the dilator portion **1360**. Thus, a catheter-dilator having a substantially same cross-sectional area over at least a majority of its length may be provided. As discussed above, the spine dilator **1340** and the spine catheter **1320** may have corresponding tabs **1334**, **1364** that engage in a locked configuration and disengage in an unlocked configuration.

[0102] Referring to FIG. **15**B, a spined aspiration catheter-dilator having a spined catheter **1320** and a spined dilator **1340** in an unlocked configuration is illustrated in accordance with an embodiment. The spined dilator **1340** may be removed from the spined catheter **1320** in a manner similar to that described above. In an embodiment, the spined aspiration catheter-dilator may have a similar cross-sectional area over a majority of its length, and thus, the shapes of the spined catheter **1320** and the spined dilator **1340** may be complimentary. For example, the spine **1330** may have a cross-sectional area along an arc, such as a quarter circle, and thus, a cross-sectional area of the dilator spine **1362** may be three quarters of a circle. As such, the spine **1330** may conform to the dilator spine **1362** to provide an overall cross-sectional area of a full circle.

[0103] Referring to FIG. **16**, a schematic view of a spined catheter **1320** having a distal luminal portion **1322** having an inner lumen **1323** located in a neurovascular anatomy is illustrated in accordance with an embodiment. Used in conjunction with an access sheath **1220** having a sheath body **1222** and an inner lumen **1232**, in an embodiment where the spined catheter **1320** reaches the ICA and the distance to embolus E is consistently felt to be less than 20 cm, one would see that the distal luminal portion **1322** having a length of 25 cm would allow for an overlap region **1120** with the access sheath **1220** to create a seal. The overlap region **1120** may have a length of a few centimeters, and the may vary depending on the distance from the embolus E to the distal end of the distal luminal portion **1322**, e.g., depending on how far the spined catheter **1320** is advanced relative to the access sheath **1220**.

[0104] As described elsewhere herein, the luminal area available for aspiration of the embolus is greater using the spined catheter **1320** as compared to an aspiration system having a conventional large bore catheter in an access sheath. More particularly, the combined volume of the luminal area of the spined catheter **1320** and the luminal area of the access sheath **1220** proximal to the distal luminal portion **1322** is greater than the luminal area of the large bore catheter along the entire length of the system. Thus, the likelihood of removing the embolus in a single aspiration attempt may be increased. More particularly, the stepped up luminal diameter along the spine **1330** may enable a greater aspiration force to be achieved resulting in improved aspiration of the embolus. The stepped up luminal diameter may also increase the annular area available for forward flushing of contrast, saline, or other solutions while devices such as microcatheters or tapered inner members are coaxially positioned in the spined catheter and access sheath. Thus, the ease and ability to perform angiograms during device navigation may be improved.

[0105] The disclosed systems may be supplied with ancillary devices that are particularly configured to be used with the system. It should be appreciated that reference to one implementation of an access sheath system or aspiration catheter system is not intended to be limited and that the ancillary devices described herein can be used with any of the systems having any of a variety or combination of features described herein. For example, where an access sheath is described below it should be appreciated that one or more features of any of the access sheaths or access sheath systems described herein can be incorporated. Similarly, where a spined catheter is described below one or more featured of any of the spined catheters or spined catheter systems described herein can be incorporated.

[0106] In an implementation, the system includes a microcatheter **400** (see FIG. **1**). The microcatheter **400** can be configured to be particularly suited for navigation in the cerebral vasculature. The microcatheter **400** may be used in place of the tapered dilator **340** to help navigate the spined catheter **320** to the desired site. As such, it may include means at the proximal end to lock the spine **330** to the microcatheter **400**, so that so that the two components (the spined catheter **320** and the microcatheter **400**) may be advanced as a single unit over the guidewire. In some instances the microcatheter **400** is advanced ahead of the

catheter **320**, to provide support as the catheter **320** is advanced, or to cross the occlusion and perform an angiogram distal to the occlusion. In this case, the length of the microcatheter **400** can be longer than the spined catheter **320** by about 10 to 20 cm. The microcatheter **400** may also be used to deliver a retrievable stent device **500** to the occlusion. In this case, the microcatheter **400** can have an inner diameter suitable for delivery of the retrievable stent device **500**, for example, in the range 0.021" to 0.027" and with a PTFE inner liner. The microcatheter **400** can be at least about 5-10 cm longer or at least about 5-20 cm longer than the overall length of the spined catheter **320** to allow the microcatheter **400** to extend beyond the distal end of the aspiration catheter **320** during navigation.

[0107] In an implementation, the system includes a retrievable stent device **500** with a distal expandable section **510**, which is sized and configured to be delivered through the microcatheter **400**, as shown in FIG. **9**. The retrievable stent device **500** may be used in conjunction with the other components of the system to aid in removal of the occlusion. The retrievable stent device **500** may also be used to quickly restore flow to the occluded artery during the thrombectomy procedure. Examples of retrievable stent devices include the Solitaire Revascularization Device (Medtronic) or the Trevo Stentriever (Stryker).

[0108] In a method of use, the retrievable stent device **500** is used to assist in bringing thrombus into the catheter **320** during an aspiration step, or clearing the catheter **320** that may become clogged during the aspiration step. In an implementation, the retrievable stent device **500** is configured to be particularly suited for performing these functions. For example, as shown in FIG. **10**A, the distal end of the expandable portion **510** of the device **500** has multiple struts or elements **520** that come together at the distal tip to close off the distalmost end, such that the device allows blood flow across the device, but captures the thrombus pieces as the device **500** is pulled into the catheter **320**, and subsequently through the catheter **320** and out the distal end. Alternately, the distal end **520** is a filter element or a balloon element.

[0109] In another example, in FIG. **10**B, the retrievable stent device **500** includes two or more segments with one or more proximal segments **510***a* configured to be expanded in the catheter distal inner lumen while one or more distal segments **510***b* are expanded across the occlusion as is done with prior retrievable stent devices. Alternately, as seen in FIG. **10**C, the retrievable stent device **500** has a very long expandable portion **510**, such that a proximal portion of the expandable portion may be expanded in the catheter distal inner lumen while the distal portion is expanded across the occlusion. In all these implementations, the proximal end of expandable section **510** has minimal structural elements that will allow the expandable section to be pulled easily into the lumen of the catheter **320**, and out of the access sheath **320**, so as minimize impediment of thrombus aspiration through the device. In these examples, the expandable portion **510** is still engaged with the clot even when the clot is aspirated into the catheter **320**, and if the catheter **320** becomes corked, the device **500** is well-positioned to clear the clot when it is pulled back. Once the retrievable stent device **500** has been removed from the luminal portion **322** of the catheter **320**, additional aspiration can be applied to the site through the catheter **320** if it is still partially or fully occluded. This step would not be possible if the catheter **320** remained clogged; the catheter would have to be removed and cleared outside the patient before being reinserted for additional aspiration. This configuration of retrievable stent device **500** can be used with either a conventional single lumen aspiration catheter, or a spined aspiration catheter **320**.

[0110] The implementations of device **500** as shown in FIGS. **10**A-**10**C may be used with known thrombectomy devices and methods to address the issue of catheters clogging during thrombus aspiration.

[0111] In an implementation, the system includes an aspiration source **600**, as shown in FIG. **2**A or FIG. **3**. The aspiration source **600** can be attached to the aspiration line **230** on the access sheath **220**. Examples of aspiration source **600** include a syringe or an active aspiration pump. The aspiration source **600** may be connected to a delivery location, such as a receptacle. The receptacle and source of aspiration **600** may be separate, such as a mechanical or electromechanical fluid pump whose outlet is connected to a blood collection reservoir or may be combined into a single device such as a syringe or syringe pump. Alternately, the blood collection reservoir is connected to a source of vacuum such as a hospital vacuum line or an air vacuum pump, and is thus the receptacle as well as the source of aspiration. A filter and/or a check valve may be coupled with the aspiration source. The pump may be a positive displacement pump such as a diaphragm or piston pump, a peristaltic pump, centrifugal pump, or other fluid pump mechanism known in the art.

[0112] In an implementation, the aspiration source is a variable state or multi-state aspiration source, and includes a mechanism to control the level of aspiration, for example by modifying the vacuum level in the vacuum pump, by modifying the power to the motor of a positive displacement, peristaltic or centrifugal pump, or modifying the syringe pull back speed in the syringe or syringe pump. Alternately, the aspiration rate may be varied by providing an element with variable resistance to flow, for example parallel flow paths that can switch between a high and low flow resistance path, flow orifices or lumens that can be variably opened, or other means to vary flow resistance. In an example, the aspiration source is configured to have two levels of aspiration: a high level of aspiration to be used when the catheter is in contact with the thrombotic material, to aspirate the thrombotic occlusion, and a low level of aspiration to be used during steps in the procedure that are high risk of causing distal emboli, for example crossing the lesion or when flow is restored to the vessel when a retrievable stent device is expanded.

[0113] In another example, as shown in FIG. **11**, the aspiration source **600** further includes a flow sensor **275** that senses flow in the aspiration line **230**, coupled to a controller that controls the level of aspiration. The aspiration source **600** can increase in aspiration level when the flow rate is slow and decrease when the flow rate is increased. In this manner, the force is greatest when the catheter is clogged or partially clogged, but decreases to a minimal level when there is free flow to ensure protection from distal emboli but limit the volume of aspirated blood. In this manner, the system optimizes the thrombus aspiration while limiting the amount of blood aspirated. Alternately, the aspiration source **600** can include a vacuum gauge. When the flow in the catheter **320** is blocked or restricted the pump creates a higher level of vacuum. In this example the aspiration force may be configured to rise when higher vacuum is detected.

[0114] In yet another aspiration source implementation, the aspiration source **600** provides a cyclic level of aspiration force, for example, an aspiration force that cycles between a high level of vacuum to a lower level of vacuum at a set frequency, or from a high level of vacuum to no vacuum, or from a high level of vacuum to a pressure source. A cyclic aspiration mode may provide a jack-hammer type force on the thrombus and increase the ability to aspirate the thrombus through the catheter. The cyclic aspiration force may be enabled through solenoid valves, a programmable pump motor, or the like. In an implementation, cyclic aspiration is applied only when clogged or restricted flow is detected in the aspiration line, either through low flow or high vacuum, as discussed above, and at other times, the aspiration source reverts to a low level of flow, or be turned off. This configuration may be controlled by the user, or controlled automatically via a feedback loop to the aspiration source.

[0115] In an implementation, the system includes a mechanism for passive reverse flow that is configured to be connected to the aspiration line on the access sheath. For example, the aspiration line is connected to a lower pressure site such as a central vein, or an external receptacle set to zero or negative pressure.

[0116] In an implementation as shown in FIG. **11**, the flush line **236** may be connected via stopcock **238** to a syringe **286** that may hold saline fluid or radiopaque contrast. Additionally the flush line **236** may be connected to a flush source **288**, for example, a pressurized bag of saline. A valve **292** can control flow from the flush source **288** to the flush line **236**. When the valve **292** is opened to the flush line **236** a pressurized source of fluid is provided. In an implementation, the valve **292** is coupled via a mechanical or electromechanical coupler **295** to the aspiration source **600** such that the valve **292** is only open when the aspiration source **600** is on. Alternately, the valve **292** is coupled to a flow sensor **275** in the aspiration line **230**, such that the valve **292** is only on when there is flow in the direction towards the aspiration source **600**. In these implementations, the flow rate of the flush source **288** is configured to flow just enough to keep the proximal extension **240** clear of blood but not so high as to cause flow to work against the aspiration flow and limit aspiration of thrombus. An advantage of this implementation is that the proximal extension **240** remains clear of blood and any emboli or air that is in the proximal extension **240** is clearly visible. This provides a feedback to the user on when and if to flush the catheter with saline or contrast via syringe **286**.

[0117] In another implementation, the valve **292** is coupled either mechanically or electromechanically to the valve **242** that connects the sheath body **222** to the proximal portion **240** of the sheath **220**. The coupling **290** can be configured such that the valve **292** can only be opened when the valve **242** is closed. This feature allows the proximal extension **240** to be cleared of blood via a flush step, without risk of flushing emboli back through the catheter into the vasculature. The coupling **290** may be configured in one of several ways For example, the coupling **290** may always open the valve **238** when the valve **242** is closed, or the coupling may prevent the valve **238** from opening unless valve **242** is closed but that does not automatically open.

[0118] In an implementation, the valve **292** is a variable state valve that allows different levels of flush flow rate. In this example, the valve **292** is configured to allow a slow flush when the aspiration source is on a low setting, a higher level of flush when the aspiration source is on a high setting. In an implementation, the valve allows yet a higher level of flush when the valve **242** is closed. These configurations allow a continuous removal of debris and/or clear visibility of the proximal portion of the access sheath and minimizes the risk of distal emboli or air entering the vasculature during the steps of the procedure. For example, during the step when the distal tip of catheter is being removed from the proximal hemostasis valve **234**, any clot that was captured on the tip of the catheter may be liberated when the catheter is pulled through the valve, but with the continuous flush the liberated emboli would be flushed into the aspiration line and not remain in the sheath where it might be re-injected into the vasculature, for example during a contrast injection after the catheter is removed.

[0119] Again with respect to FIG. **1**, the system **100** may include a kit of multiple devices. In an implementation, the kit includes an access sheath system **200** wherein the access sheath system includes an access sheath, one or more tapered sheath dilators, and one or more sheath guidewires. In another implementation, the system **100** includes an access sheath system **200** and one or more spined catheter systems **300** with one or more inner diameters. In an implementation, the spined catheter system **300** includes a spined aspiration catheter **320** and a tapered dilator **340**. In an implementation, the spined catheter system **300** also includes a catheter clearing tool **350**. In yet another implementation, the system **100** includes an access sheath system **200**, a tapered catheter system **300**, a microcatheter **400**, and a retrievable stent device **500**.

[0120] In an implementation configured for transcarotid access, the kit includes an access sheath **220**, wherein the insertable sheath body **222** length is about 23 cm, the proximal extension **240** is about 22 cm, the connector **226** is about 7 cm and the proximal hemostasis valve **234** is about 5 cm, for an overall access sheath length of about 57 cm. In an implementation, the kit also includes a spined aspiration catheter **320** wherein the catheter distal luminal portion **322** is about 20 cm, the transition section **326** is about 2-4 cm, and the spine section **330** is about 65 cm, for an overall spined catheter length of about 88 cm. In another implementation, the kit also includes a tapered dilator **340** with a working length of 93 cm. In another implementation, the kit also includes a microcatheter **400** with a working length of about 198 cm and a retrievable stent device **500** with an overall length of 128 cm.

[0121] In an implementation configured for transfemoral access, the kit includes an access sheath system **220**, wherein the insertable sheath body **222** length is about 90 cm, the proximal extension **240** is about 22 cm, the connector **226** is about 7 cm and the proximal hemostasis valve **234** is about 5 cm, for an overall access sheath length of about 124 cm. The proximal portion of the access sheath may be a removable proximal portion **280**. In an implementation, the kit also includes a spined aspiration catheter **320**, wherein the catheter distal luminal portion **322** is about 20 cm, the transition section **326** is about 2-4 cm, the spine section **330** is about 132 cm, for an overall spined catheter length of about 155 cm. In another implementation, the kit also includes a tapered dilator **340** with a working length of 160 cm. In another implementation, the kit also includes a

microcatheter **400** with a working length of about 165 cm and a retrievable stent device **500** with an overall length of 195 cm.

[0122] In another implementation, the kit includes an access sheath **220** with a removable proximal portion **280**, and a single lumen aspiration catheter. In another implementation, the kit includes only the proximal portion **280** that can be attached to any introducer sheath suitable for the procedure. In this implementation, the kit may also include a spined aspiration catheter **320** or a single lumen aspiration catheter.

[0123] In any of these implementations, the kit may also include an aspiration source, for example a pump, an attachment to a vacuum pump, a syringe, a syringe that is attachable to a syringe pump, or the like. The kit may also include means for automatic flushing, for example coupling means **290** or **292**.

[0124] As described elsewhere herein, it should be appreciated that reference to one implementation of an access sheath system or catheter system is not intended to be limited and that the kits described herein can incorporate any of the systems and/or ancillary devices described herein as having any of a variety of features. For example, where an access sheath is described as being a part of a kit it should be appreciated that one or more features of any of the access sheaths or access sheath systems described herein can be incorporated. Similarly, where a spined catheter is described as being part of a kit one or more featured of any of the spined catheters or spined catheter systems described herein can be incorporated.

[0125] FIGS. **2**A and **3** illustrates methods of use. As shown in FIG. **2**A, an access sheath **220** is inserted using standard vascular access sheath into the femoral artery, and advanced until the sheath tip is positioned at a site as distal as safely possible in the internal or common carotid artery. In FIG. **3**, the access sheath **220** is inserted directly into the common carotid artery, and advanced until the sheath tip is positioned at a site as distal as safely possible in the internal carotid artery. In either scenario, the sheath may be advanced initially to the common carotid artery or proximal internal carotid artery, and then the dilator and is exchanged for a softer dilator before advancing the sheath more distally into the internal carotid artery. The sheath is then secured to the patient using a suture through the eyelet on the sheath connector. The sheath aspiration line **230** is connected to an aspiration source **600** such as a syringe or aspiration pump. The sheath aspiration line may also be connected via a stopcock or stopcock manifold to a forward flush line (such as a pressurized saline bag).

[0126] Once the sheath tip is positioned at the desired location, it is secured to the patient. A spined catheter, tapered dilator, and guidewire are pre-assembled in a coaxial configuration and introduced through the sheath proximal hemostasis valve into the carotid artery. The spined aspiration catheter **320** is advanced through access sheath and positioned until the distal tip is at the treatment site. The devices are advanced using standard interventional techniques until the distal catheter tip is at the proximal face of the occlusion. A mark **332** on the spine **330** ensures that there is still an overlap region **120** between the distal luminal portion **322** of the catheter and the access sheath body **222**. At this point, the tapered dilator **340** and guidewire can be removed. In an alternate implementation, a microcatheter **400** is used in place of the tapered dilator **340** to help navigate the catheter **320** to the occlusion. During the procedure, the forward flush is opened to the aspiration lumen to keep the lumen clear before or between periods of aspiration. At any point during device navigation, aspiration may be initiated from the aspiration source **600** at a level suitable for distal embolic protection, for example when the guidewire or microcatheter **400** is crossing the occlusion.

[0127] Once the distal tip of the spined aspiration catheter **320** is at the face of the clot, aspiration is initiated at a level suitable for aspiration thrombectomy, which is a higher level than for distal embolic protection. The catheter **320** may remain in aspiration mode against the clot for some period of time, as deemed suitable by the user. Depending on the results of the aspiration thrombectomy maneuver (as observed by flow though the aspiration line and/or resistance to backwards force on the spine of the catheter), the user may determine that the clot has been completely aspirated, or if not, the user may choose to move the catheter **320** back and forth to aspirate the clot in situ, or to slowly retract the catheter **320** into the sheath **220**. If flow is restored to the artery via aspiration of the clot through the catheter **320** and sheath **220**, a final angiogram may be performed and the catheter **320** can be retracted. If however, thrombus occludes the catheter tip and cannot be removed, the catheter **320** is pulled back, with some or all of the occlusion attached through suction force to the tip of the catheter **320**.

[0128] In the latter scenario, aspiration is maintained at the tip of the catheter **320** the entire time the catheter **320** is being pulled into the access sheath **220**. Once the catheter **320** has been completely retracted into the access sheath **220**, the catheter **320** can be quickly removed from the sheath body **222** while aspiration is maintained on the sheath **220**. It should be appreciated that the catheter **320** may be withdrawn into the sheath body **222** after extending through the distal opening **219** at the distal tip of the sheath body **222**. Alternatively, the catheter **320** may be extending through a side opening **219** near a distal end region of the sheath body **222** such that withdrawal of the catheter **320** into the sheath body **220** occurs through this side opening **219**. At some time during catheter retraction, depending on if the catheter **320** is clogged with occlusive material, the aspiration level may be changed from a high level desirable for aspiration thrombectomy to a lower level desirable for distal embolic protection. By providing the ability to maintain aspiration continuously from either the catheter tip or the sheath tip or the sheath distal region, and providing the means to change aspiration levels and maintain asp, the procedure optimizes the ability to aspiration clot while minimizing distal emboli and minimizing blood loss from aspiration. If desired, aspiration may also be initiated at the flush line **236** of the proximal valve **234**, to reduce chance of distal embolization during removal of the catheter tip with possibly adhered clot through the proximal valve **234**.

[0129] The spined aspiration catheter **320** may be removed completely from the proximal hemostasis valve **234** of the sheath **220**. Alternately, if the access sheath **220** has a proximal extension **240**, the distal luminal portion **322** may be pulled into the proximal extension portion **240**. In the latter scenario, once pulled in, the catheter **320** and sheath **220** may be flushed to remove potential embolic material without removing the catheter **320** completely from the sheath **220**. A vigorous flush from the proximal valve flush line **236** simultaneous with aspiration from the aspiration line **230** creates a flush environment for the catheter **320** and

sheath **220**. If desired, a catheter clearing tool **350** may be inserted into the sheath proximal valve **234** and used at this time to clear the inner lumen **323** of the catheter **320**. If the access sheath **220** has a connector valve **242**, the proximal portion **240** may be closed off from the sheath body **222** during this stage, so that there is no risk of flushing embolic material into the sheath body **222** and thence into the artery.

[0130] Alternately, the valve **242** may be closed off and aspiration paused while the proximal valve **242** is opened or removed and the catheter **320** is completely removed from the sheath **220**. Closing the valve **242** limits the blood loss from the sheath **220** as the catheter **320** is removed. The catheter **320** may then be flushed onto the table or into a bowl or other receptacle, using the cleaning tool **350**. The proximal extension portion **240** may also be flushed by providing a flush source **288** from the proximal valve flush line **236** simultaneous with aspiration from the aspiration line **230**, or by opening a side port on the aspiration line **230** to flush to the table or into a bowl or other receptacle. If desired, an angiogram may be performed to assess flow through the treated artery. If the procedure dictates, the catheter **320** or another catheter may be re-advanced as above over a guidewire and tapered dilator **340** or microcatheter **400** to the site of the occlusion to attempt another aspiration thrombectomy step. The flushing of the catheters and proximal extension portion **240** of the access sheath **220** minimizing the risk of distal emboli during these subsequent steps.

[0131] In another exemplary method, a retrievable stent device **500** can be used in conjunction with aspiration to remove the thrombotic occlusion. FIG. **9** illustrates this method of use through either a transcarotid or transfemoral access site. In this scenario, the access sheath **220** can be positioned as above and advanced until the sheath tip is positioned at a site as distal as safely possible in the internal carotid artery. The spined aspiration catheter **320** can be then pre-loaded onto a microcatheter **400** and guidewire, and the co-axial assembly can be introduced via the access sheath **220** into the carotid artery and advanced into the cerebral vasculature. The microcatheter **400** and guidewire can be advanced across occlusion. The tip of the spined aspiration catheter **320** can be advanced as distal as possible but proximal to the clot.

[0132] At this point, the guidewire can be removed and the retrievable stent device **500** inserted through the microcatheter **400** until it too is positioned across the occlusion. The microcatheter **400** can be pulled back to deploy the stent. At any point during device navigation, aspiration may be initiated from the aspiration source at a level suitable for distal embolic protection, for example when the guidewire or microcatheter **400** is crossing the occlusion, or prior to stent deployment. By having aspiration initiated before stent deployment, any emboli that was liberated while crossing the lesion is not carried downstream on restoration of flow in the artery, but is rather captured into the catheter tip. While the retrievable stent device **500** is deployed, aspiration may be maintained. It is typically deployed for several minutes before retraction of the stent is attempted, to maximize the engagement of the stent struts to the occlusion. Then, the retrievable stent device **500** can be pulled into the spined catheter **320** and continued to be retracted until it has been completely removed from the proximal valve of the access sheath **220**.

[0133] Alternately, the stent device **500** can be pulled into the distal portion of the spined catheter **320**, and the stent device **500** and spined catheter **320** can be pulled back together out of the access sheath **220**. Aspiration may be increased to a higher level during stent and/or catheter retraction steps, to optimize aspiration of clot and minimize distal emboli. If the access sheath **220** has a proximal extension **240** with a valve on the connector, the device **500** can be pulled into the proximal extension **240** and the valve closed, and then the proximal hemostasis valve **234** may be opened widely and the stent device **500** or the stent device/spined catheter combination may be pulled out. The proximal extension section **240** may then be flushed via the valve flush line **236** and the aspiration line **230** before the same or alternate devices are reinserted for another thrombectomy attempt, if the procedure dictates.

[0134] Alternately after placement of an aspiration catheter **320**, a long or segmented stent retriever **500** can be positioned as above with a microcatheter **400** such that part of the expandable portion **510** is across the thrombus and part is in the distal segment **322** of the catheter **320**, and then expanded. After the expandable portion **510** is expanded aspiration can be initiated so that thrombus either is suctioned completely out of the vessel and catheter **320** into the aspiration source **600**, or is suctioned into the distal tip and/or distal lumen **323** of the catheter **320**. At that point, the long or segmented stent retriever **500** can be carefully pulled into the catheter **320**, while maintaining aspiration. During this time clot that has been clogging the catheter **320** and/or debris that is liberated during this step should be aspirated into the catheter **320**. Complete removal of the stent retrieval device **500** from the working channel **323** of the catheter **320** should free up the lumen **323** from occlusive material.

[0135] In any of these scenarios, the aspiration source may be a variable or multi-state aspiration source that is configured to maximize the aspiration force on the thrombotic occlusion while minimizing blood loss during periods of free flow in the catheter.

[0136] In another exemplary method, the access sheath **220** has an occlusion balloon **246**. As seen in FIG. **7**, the balloon **246** may be inflated during steps of the procedure that are high risk for distal emboli, for example retraction of the stent device **500** or the spined catheter **320** with adhered clot. The balloon **246** has the effect of stopping antegrade flow and increasing the force of aspiration in the carotid artery, thus increasing the aspiration of clot and reducing the risk of distal emboli.

[0137] In another exemplary method, the access sheath **220** has an expandable distal tip. In this method, the distal tip may be expanded sometime after the access sheath tip has been positioned at the desired site, but before retraction of the spined catheter **320** into the access sheath **220**. This method would reduce the chance of distal emboli caused by the release of clot that was adhered to the distal tip of the spined catheter **320**, as the distal tip is pulled into the tip of the sheath **220**. Instead, the access sheath tip that is expanded or flared out acts as a funnel to capture the entire clot.

[0138] In another exemplary method and as discussed briefly above, the access sheath **1220** has a side opening **1219** (best shown in FIG. **12**C). In this method, the spined catheter **1320** having a spined dilator **1340** extending through lumen **1323** of the distal luminal portion **1322** of the catheter **1320** can be advanced distally through the lumen

1223 of the access sheath **1220** towards the distal end region of the sheath body **1222**. The distal tip of the distal luminal portion **1322** of the spined catheter **1320** (which may having the spined dilator extending through the distal luminal portion **1322** and forming a distal-most end to the catheter system) may exit the lumen **1223** via the side opening **1219** and then be further advanced distally beyond the distal tip of the access sheath **1220**. A ramp feature **1217** or other internal feature can be incorporated at a distal end region of the lumen **1223** to provide a surface against which the tip of the dilator can be deflected to guide the catheter **1320** away from a longitudinal axis A of the lumen **1223** of the sheath body **1222** towards the side opening **1219** to achieve a smooth transition or exit from the lumen **1223**. The distal tip **1346** of the dilator **1340** can abut against the ramp feature **1217** and be directed at a slight angulation away from the longitudinal axis of the sheath body **1222** towards the side opening **1219**. As described elsewhere herein, the sheath body **1222** and thus the side opening **1219** can be rotated around the longitudinal axis A such that the one or more side openings **1219** are positioned to allow for distal extension of the catheter **1320** from the side openings **1219** in a desired direction relative to the longitudinal axis A of the sheath **1220**. This will often be dictated by the anatomy encountered by the operator. Also as mentioned elsewhere herein, an overlap region **1120** is formed between the distal luminal portion **1322** of the catheter and the access sheath body **1222**. A sealing element **1336** can be positioned on the external surface of the distal luminal portion **1322**, for example, near a proximal end region of the distal luminal portion **1322** and may be located within the overlap region **1120**. The seal formed can allow for full transmission of aspiration force through the contiguous lumen formed by the lumen **1323** of the luminal portion **1322** and the lumen **1223** of the access sheath body **1222** upon withdrawal of the dilator **1340** from the lumen **1323** of the luminal portion **1322**.

[0139] In another exemplary method, the aspiration source **600** is connected to a blood collection reservoir that maintains the integrity of the blood in such a way that the blood can be safely returned to the patient at the conclusion of the thrombectomy portion of the procedure, either directly or through subsequent treatment of the blood such as cell washing and/or blood filtration. In another exemplary method, the aspiration source is connected to a blood shunt that is connected in turn to a device such as a venous sheath or a venous return catheter that enables blood to be returned to the patient during the procedure and not requiring a blood reservoir. In another exemplary method, the blood is collected in a reservoir and subsequently discarded at the end of the procedure.

[0140] In another exemplary method, the access sheath **1220** is delivered as described elsewhere herein from a femoral insertion site to a right or left subclavian artery or an external carotid artery. The access sheath **1220** may be delivered to a carina of a bifurcation between a target vessel having the embolus, such as the internal carotid artery (ICA), and another vessel, such as the external carotid artery (ECA). Once the access sheath **1220** is in position a working device such as a splined aspiration catheter **1320** can be delivered through the lumen **1223** of the access sheath **1220** into the target vessel. The lumen **1223** of the access sheath **1220** and the lumen **1323** of the catheter **1320** are contiguous and form a stepped up diameter for aspiration as described elsewhere herein. An overlap region **1120** is maintained between the catheter **1320** extending distally from the lumen **1223** of the access sheath **1220**. It should be appreciated that the catheter **1320** can extend distally from the lumen **1223** of the access sheath **1220** through an opening **1221** at the distal tip of the access sheath **1220** or a side opening **1119** near the distal region of the access sheath **1220**. The body **1222** of the access sheath **1220** may be oriented to provide optimum placement of the side opening **1119** relative to the anatomy. The overlap region **1120** between the distal luminal portion **1322** of the catheter **1320** and the access sheath body **1222** can create a seal and allow for full transmission of aspirating force through the contiguous lumen formed by the lumen **1323** of the luminal portion **1322** and the lumen **1223** of the access sheath body **1222**, as well as providing a seal for delivery of fluids to the target vessel such as angiographic contrast injection, saline, one or more drugs or other materials directly into the neurovascular anatomy. The spined aspiration catheter **1320** can create a more powerful aspiration force by allowing for the working lumen **1223** of the access sheath **1220** to provide a majority of the aspiration column. As described elsewhere herein, the dimension of the lumen **1323** of the distal luminal portion **1322** of the aspiration catheter **1320** may be less than the diameter of the lumen **1223** of the access sheath **1220**, which is reduced only by a diameter of the spine **1330** extending therethrough. The increased diameter of the lumen can create a larger aspiration column than, e.g., an aspiration column of a large bore catheter having a similar overall length. The spined aspiration catheter **1320** may also be used as a supportive delivery catheter, for example, where the operator wants to reach the petrous carotid or other hard to reach landmarks within the cerebral vasculature. More particularly, after delivering the spined aspiration catheter **1320** into the target vessel through the working lumen **1223** of the access sheath **1220**, a secondary working device such as a guidewire, microcatheter, stent retriever, etc. may be delivered through the lumen **1323** into a more distal anatomy to perform other procedural operations as described elsewhere herein.

[0141] While this specification contains many specifics, these should not be construed as limitations on the scope of an invention that is claimed or of what may be claimed, but rather as descriptions of features specific to particular implementations. Certain features that are described in this specification in the context of separate implementations can also be implemented in combination in a single implementation. Conversely, various features that are described in the context of a single implementation can also be implemented in multiple implementations separately or in any suitable sub-combination. Moreover, although features may be described above as acting in certain combinations and even initially claimed as such, one or more features from a claimed combination can in some cases be excised from the combination, and the claimed combination may be directed to a sub-combination or a variation of a sub-combination. Similarly, while operations are depicted in the drawings in a particular order, this should not be understood as requiring that such operations be performed in the particular order shown or in sequential order, or that all illustrated operations be performed, to achieve desirable results. Therefore the spirit and scope of the appended claims should not be limited to the description of the implementations contained herein.

1. A method of performing a medical procedure in a cerebral vessel of a patient, the method comprising:

inserting a catheter system into a blood vessel, the catheter system comprising:

a catheter comprising:

a flexible distal luminal portion having a proximal end, a distal end, and a lumen extending between the proximal end and the distal end; and

a proximal elongate body that is less flexible than the flexible distal luminal portion and is configured to control movement of the catheter; and

a catheter advancement element comprising:

a flexible elongate body having a proximal end region, a distal tip, a single lumen that communicates with a distal opening in fluid communication with the blood vessel, and an outer diameter, wherein the outer diameter of the flexible elongate body is between about 0.003"-about 0.010" smaller than an inner diameter of the lumen of the flexible distal luminal portion of the catheter, and wherein the single lumen of the flexible elongate body extends longitudinally through the flexible elongate body to the distal opening; and

a proximal portion extending from the proximal end region of the flexible elongate body and extending proximally outside of the body of the patient, the proximal portion having a single lumen that communicates with the single lumen of the flexible elongate body;

advancing the catheter system distal to the petrous portion of an internal carotid artery until the distal end of the flexible distal luminal portion of the catheter reaches a target site within the cerebral vessel, wherein at least a portion of the flexible elongate body is disposed within the lumen of the flexible distal luminal portion of the catheter;

removing the flexible elongate body from the lumen of the flexible distal luminal portion of the catheter; and

removing occlusive material while applying a negative pressure to the lumen of the flexible distal luminal portion of the catheter to capture the occlusive material at, within, or through the distal end of the flexible distal luminal portion of the catheter.

2. The method of claim **1**, wherein the proximal portion extending from the proximal end region of the flexible elongate body has an outer diameter that is smaller than the outer diameter of the flexible elongate body.

3. The method of claim **2**, wherein the proximal portion is a stiff wire or hypotube.

4. The method of claim **1**, wherein the inner diameter of the catheter lumen is between about 0.040" to about 0.088".

5. The method of claim **1**, wherein the flexible elongate body has an inner diameter of between 0.020" and about 0.024" and is sized to receive a guidewire having an outer diameter of between 0.014" and about 0.018".

6. The method of claim **1**, wherein the distal tip of the flexible elongate body has a taper.

7. The method of claim **6**, wherein the taper of the distal tip of the flexible elongate body has a length between 1 cm and 3 cm.

8. The method of claim **1**, wherein at least a portion of the distal tip extends distally beyond the distal end of the flexible distal luminal portion during at least a portion of the advancing the catheter system.

9. The method of claim **8**, wherein the distal tip of the flexible elongate body has a taper.

10. The method of claim **9**, wherein the taper of the distal tip of the flexible elongate body has a length between 1 cm and 3 cm.

11. The method of claim **1**, wherein the distal tip of the flexible elongate body provides a substantially smooth transition to the distal end of the flexible distal luminal portion.

12. The method of claim **11**, wherein the substantially smooth transition is between a guidewire positioned within the lumen of the flexible elongate body and extending out the distal opening to the distal tip of the flexible elongate body to the distal end of the flexible distal luminal portion.

13. The method of claim **11**, wherein the distal end of the flexible distal luminal portion is blunt and has a flexibility that is substantially the same as a flexibility of the elongate body at a proximal end of the taper.

14. The method of claim **1**, further comprising locking the catheter and the catheter advancement element into a fixed position relative to one another during advancing the catheter system.

15. The method of claim **14**, wherein the fixed position comprises at least a portion of the distal tip extending distally beyond the distal end of the flexible distal luminal portion during at least a portion of the advancing the catheter system.

16. The method of claim **15**, wherein the distal tip of the flexible elongate body has a taper.

17. The method of claim **16**, wherein the taper of the distal tip of the flexible elongate body has a length between 1 cm and 3 cm.

18. The method of claim **14**, wherein locking the catheter and catheter advancement element comprises using a mechanical locking element or gripping the catheter and catheter advancement element by hand.

19. The method of claim **18**, wherein the mechanical locking element is configured to be placed in a locked configuration to maintain the fixed position and an unlocked configuration to allow for relative sliding.

20. The method of claim **19**, wherein when the distal end of the flexible distal luminal portion of the catheter reaches the target site, the mechanical locking element is placed in the unlocked configuration in order to remove the flexible elongate body from the lumen of the flexible distal luminal portion of the catheter.

21. The method of claim **1**, wherein the cerebral vessel is an intracranial vessel and wherein the target site is an occlusion or a region near a face of an occlusion within the intracranial vessel.

22. The method of claim **1**, further comprising a step of:

inserting a guide sheath into a blood vessel, the guide sheath comprising a lumen of the guide sheath extending between a proximal end region of the guide sheath and a distal end region of the guide sheath, the distal end region of the guide sheath having at least one opening in communication with the lumen of the guide sheath; and

advancing the guide sheath toward the target site.

23. The method of claim **22**, wherein advancing the guide sheath toward the target site comprises advancing the guide sheath to a common carotid artery.

24. The method of claim **23**, further comprising:

assembling the catheter advancement element through the lumen of the catheter and a guidewire through the single lumen of the flexible elongate body forming a

coaxial system of devices including the catheter, the catheter advancement element, and the guidewire; and

inserting the coaxial system of devices into the lumen of the guide sheath positioned advanced to the common carotid artery until at least a portion of the flexible distal luminal portion of the catheter extends out of the at least one opening of the guide sheath until the distal end of the flexible distal luminal portion of the catheter reaches the target site.

25. The method of claim **1**, wherein the step of removing occlusive material comprises:

inserting a retrievable stent device through the flexible distal luminal portion of the catheter;

capturing the occlusive material with the retrievable stent device; and

removing the occlusive material and the retrievable stent device from the target site.

* * * * *