US007984730B2

(12) **United States Patent**
**Ziv et al.**

(10) **Patent No.: US 7,984,730 B2**
(45) **Date of Patent: Jul. 26, 2011**

(54) **STOPCOCK**

(75) Inventors: **David Ziv**, Kibbutz Baram (IL); **Tomer Gil**, Kibbutz Yiron (IL)

(73) Assignee: **Elcam Medical Agricultural Cooperative Association**, Kibbutz Ba-Ram (IL)

( * ) Notice: Subject to any disclaimer, the term of this patent is extended or adjusted under 35 U.S.C. 154(b) by 790 days.

(21) Appl. No.: **11/574,618**

(22) PCT Filed: **Aug. 29, 2005**

(86) PCT No.: **PCT/IL2005/000925**

§ 371 (c)(1),
(2), (4) Date: **Apr. 20, 2007**

(87) PCT Pub. No.: **WO2006/025054**

PCT Pub. Date: **Mar. 9, 2006**

(65) **Prior Publication Data**

US 2007/0287953 A1 Dec. 13, 2007

**Related U.S. Application Data**

(60) Provisional application No. 60/607,113, filed on Sep. 3, 2004, provisional application No. 60/641,909, filed on Jan. 5, 2005.

(51) **Int. Cl.**
***F16K 11/08*** (2006.01)

(52) **U.S. Cl.** ..... **137/625.46**; 137/239; 251/118

(58) **Field of Classification Search** ..... 137/239, 137/269, 561 A, 625.46, 625.47; 251/118; 604/32, 248

See application file for complete search history.

(56) **References Cited**

U.S. PATENT DOCUMENTS

| | | | | | |
|---|---|---|---|---|---|
| 3,721,265 | A | * | 3/1973 | Hoffland | 137/625.47 |
| 3,780,736 | A | * | 12/1973 | Chen | 604/32 |
| 3,834,372 | A | * | 9/1974 | Turney | 600/561 |
| 4,146,055 | A | * | 3/1979 | Ryder et al. | 137/625.41 |
| 4,397,335 | A | * | 8/1983 | Doblar et al. | 137/625.19 |
| 4,608,996 | A | * | 9/1986 | Brown | 600/579 |
| 4,654,027 | A | * | 3/1987 | Dragan et al. | 604/99.03 |
| 4,967,797 | A | * | 11/1990 | Manska | 137/625.47 |
| 5,002,066 | A | * | 3/1991 | Simpson et al. | 600/573 |

(Continued)

FOREIGN PATENT DOCUMENTS

EP 1234596 8/2002

OTHER PUBLICATIONS

U.S. Appl. No. 60/607,113.

(Continued)

*Primary Examiner* — John Fox

(74) *Attorney, Agent, or Firm* — Fish & Richardson P.C.

(57) **ABSTRACT**

According to a preferred embodiment of the present invention there is provided a stopcock including a housing element defining at least first, second and third ports, a handle element which is selectably positionable relative to the housing element, at least one fluid passageway communicating between at least two of the at least first, second and third ports, the at least one fluid passageway being selectably defined by at least one of the housing element and the handle element, the at least one fluid passageway being configured for enabling flushing an internal volume of at least one of the first, second and third ports by a fluid flow which does not flow entirely through the port whose internal volume is being flushed.

**2 Claims, 65 Drawing Sheets**

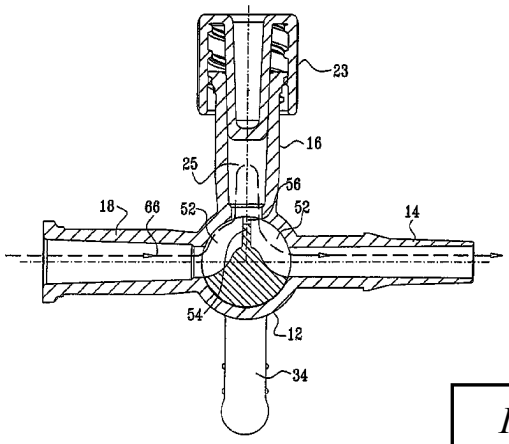




*Imperative Care v. Inari Medical*
U.S. Patent 11,974,910
**Imperative Care Ex. 1046**

U.S. PATENT DOCUMENTS

| | | | | | |
|---|---|---|---|---|---|
| 5,105,853 | A | | 4/1992 | Lie et al. | |
| 5,135,026 | A | * | 8/1992 | Manska | 137/555 |
| 5,340,364 | A | * | 8/1994 | Ghelli et al. | 604/32 |
| 5,466,228 | A | * | 11/1995 | Evans | 604/248 |
| 5,549,651 | A | | 8/1996 | Lynn | |
| 5,578,016 | A | | 11/1996 | Zinger | |
| 6,036,171 | A | | 3/2000 | Weinheimer et al. | |
| 6,089,541 | A | | 7/2000 | Weinheimer et al. | |
| 6,238,372 | B1 | | 5/2001 | Zinger et al. | |
| RE37,357 | E | | 9/2001 | Lynn | |
| 6,651,956 | B2 | * | 11/2003 | Miller | 251/149.1 |
| 7,695,445 | B2 | * | 4/2010 | Yuki | 604/4.01 |
| 2004/0210162 | A1 | | 10/2004 | Wyatt et al. | |

OTHER PUBLICATIONS

U.S. Appl. No. 60/641,909.

* cited by examiner

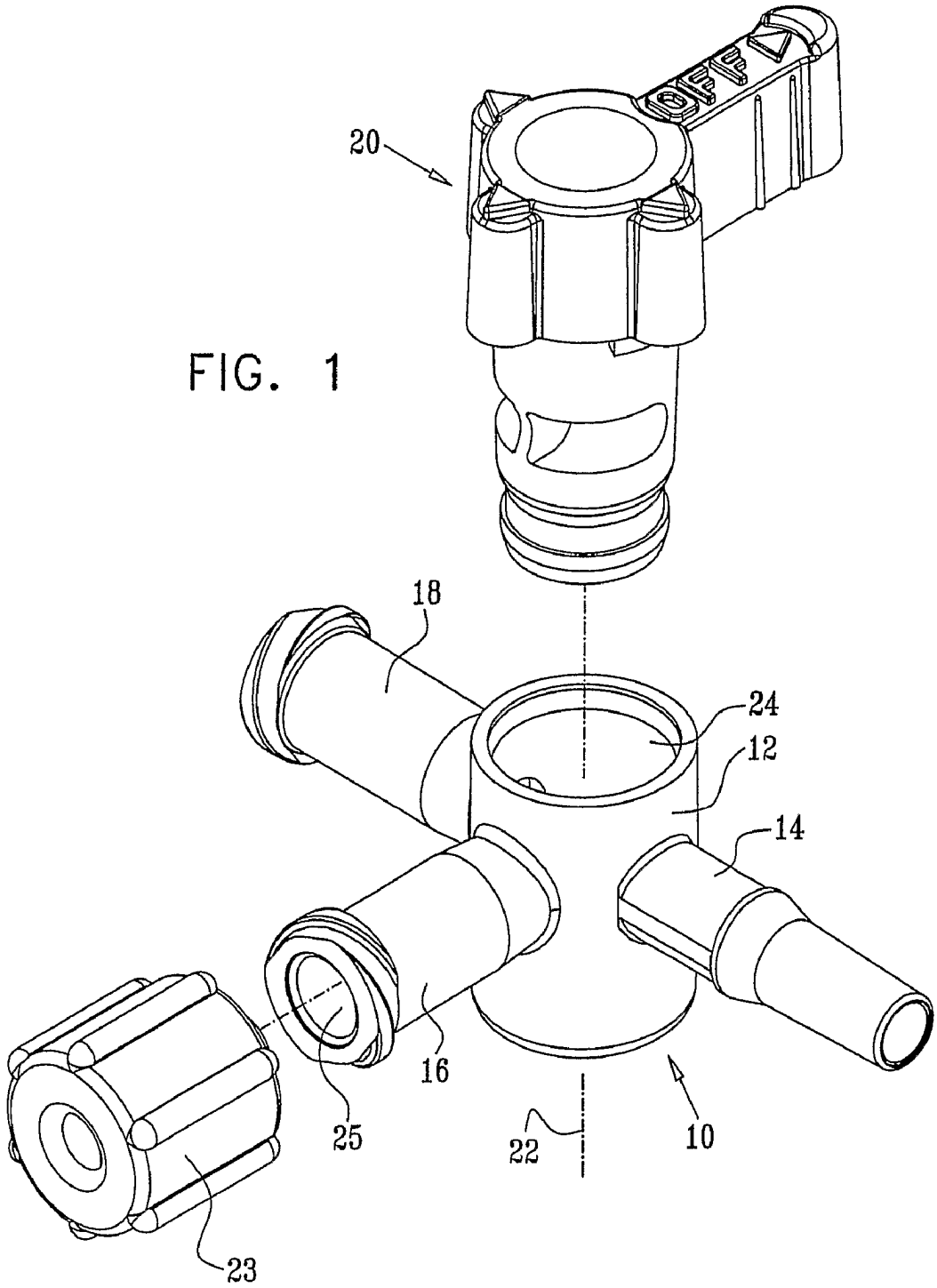


FIG. 1

FIG. 2

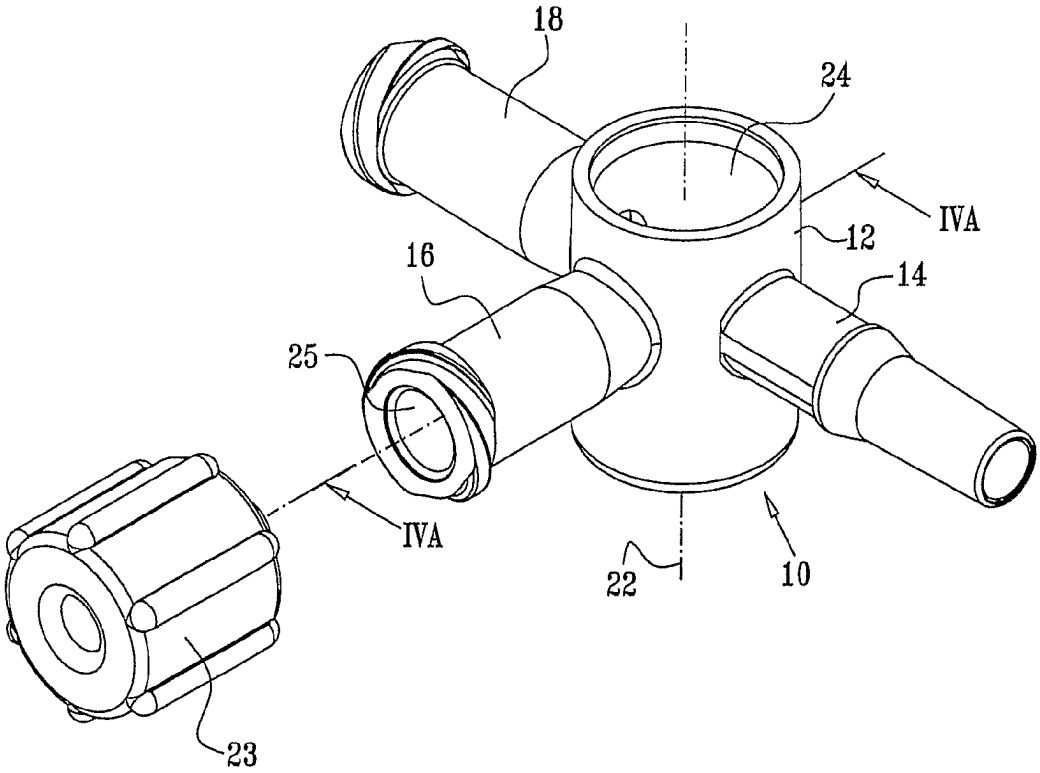


FIG. 3

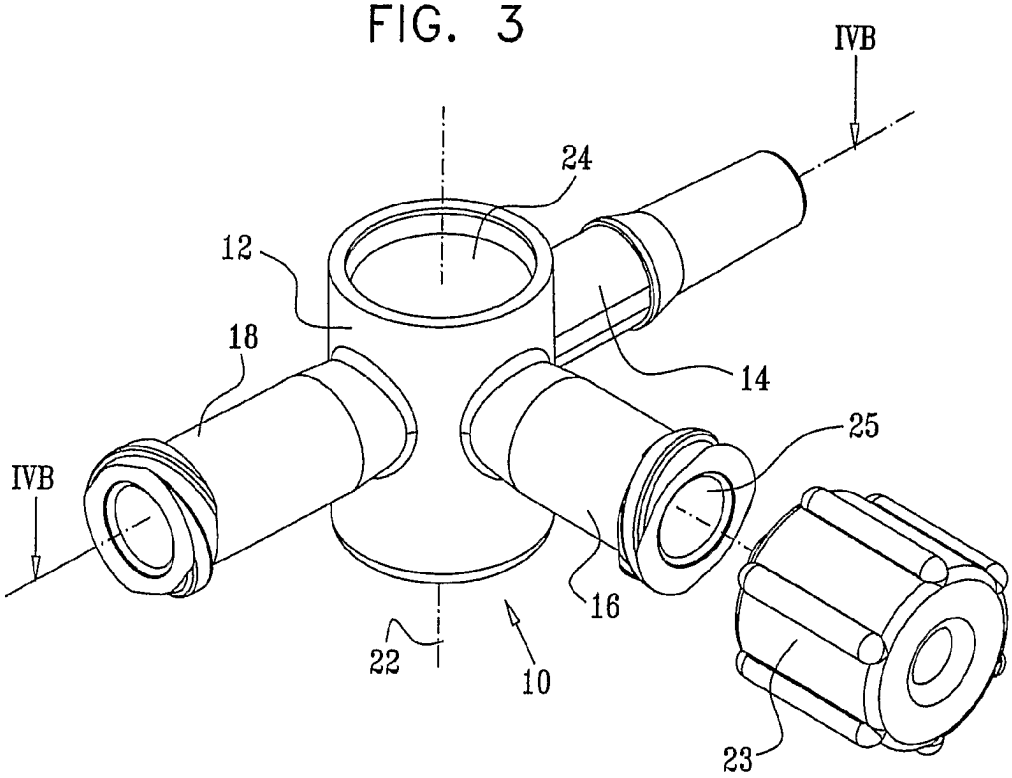

FIG. 4A

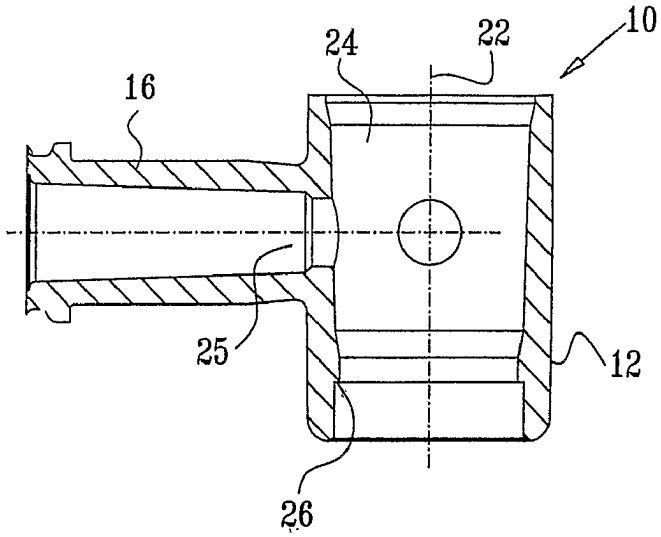


FIG. 4B

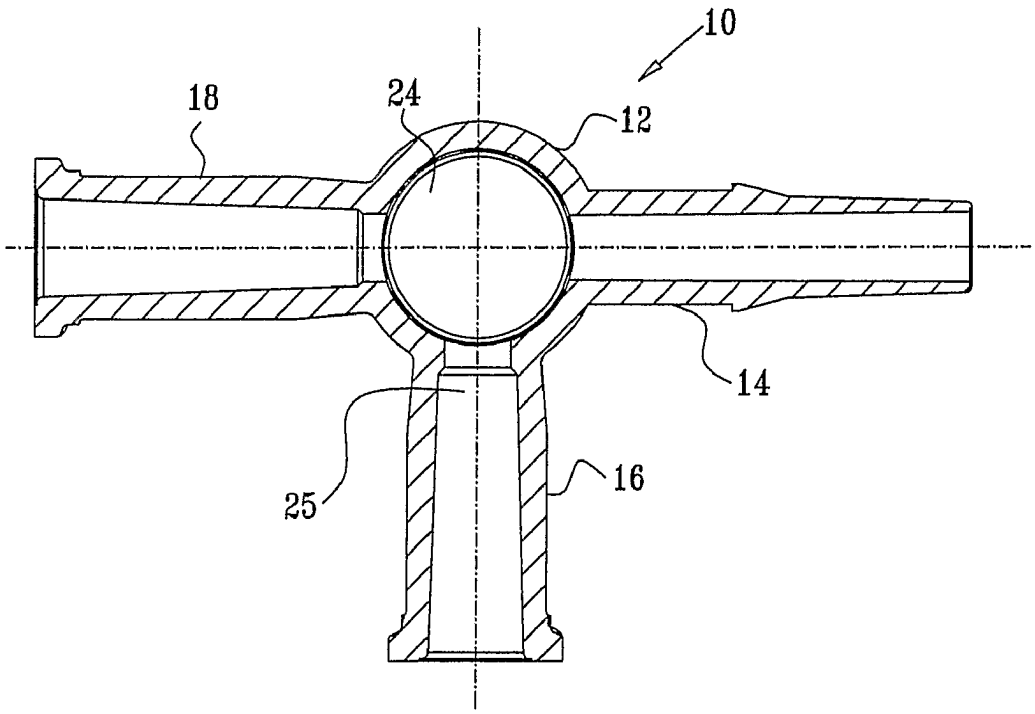

FIG.5A

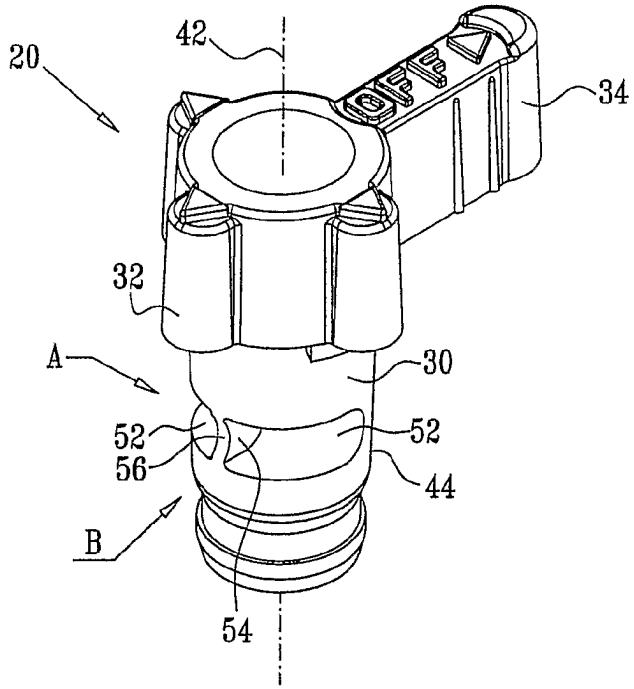
20
42
34
32
A
30
52
52
56
44
B
54

FIG. 5B

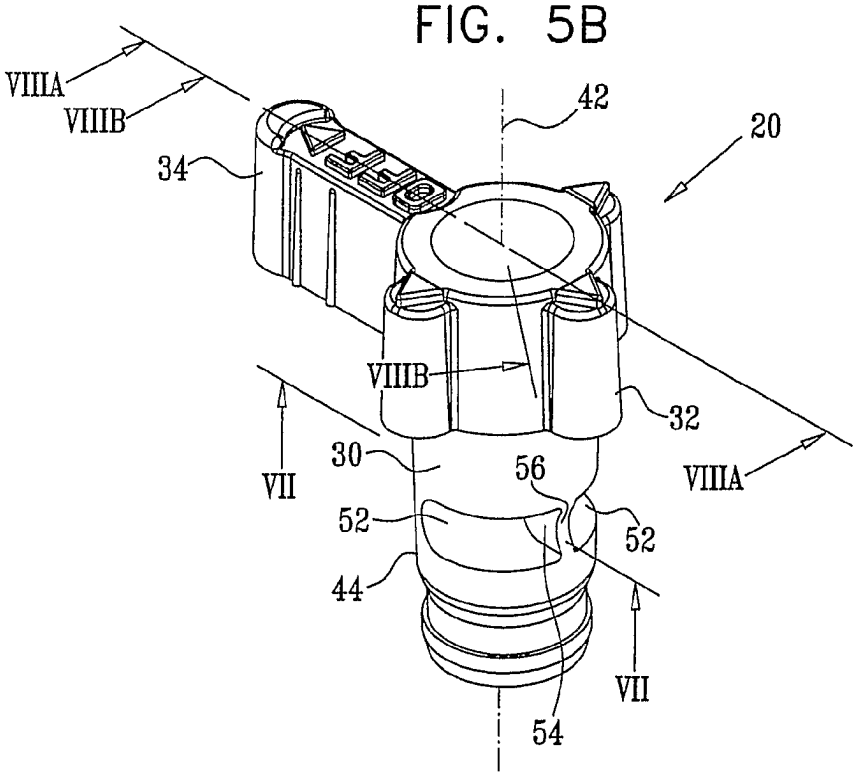
VIIIA
VIIIB
42
20
34
VIIIB
32
30
56
VIIIA
VII
52
52
44
VII
54

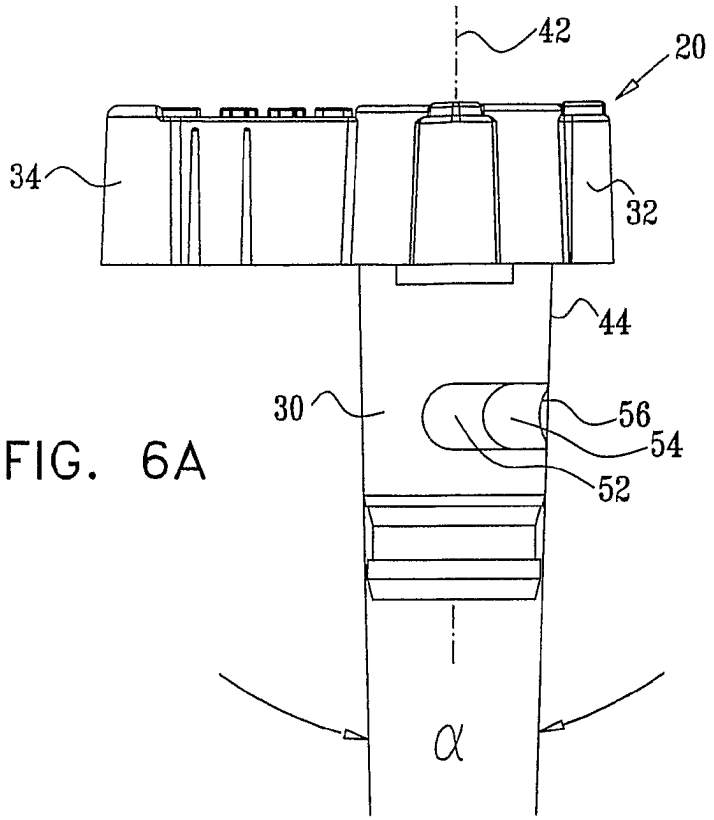


FIG. 6A

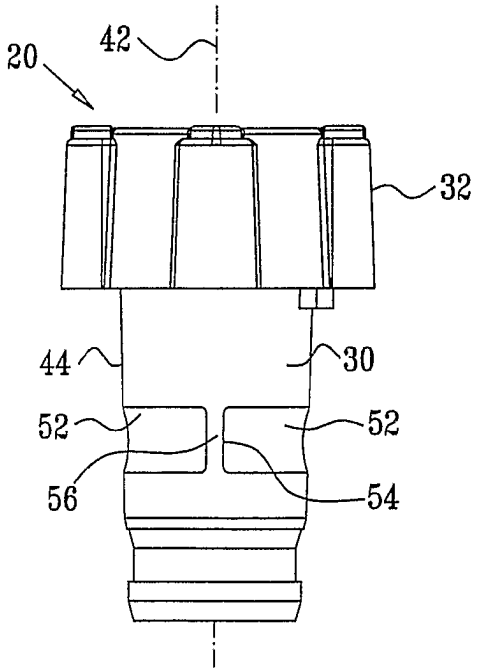


FIG. 6B

FIG. 7

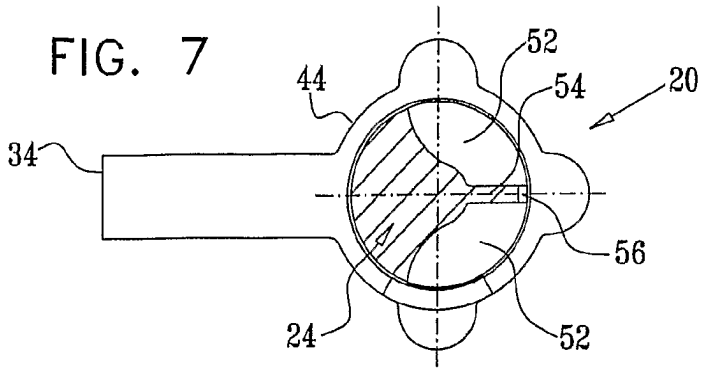


FIG. 8A

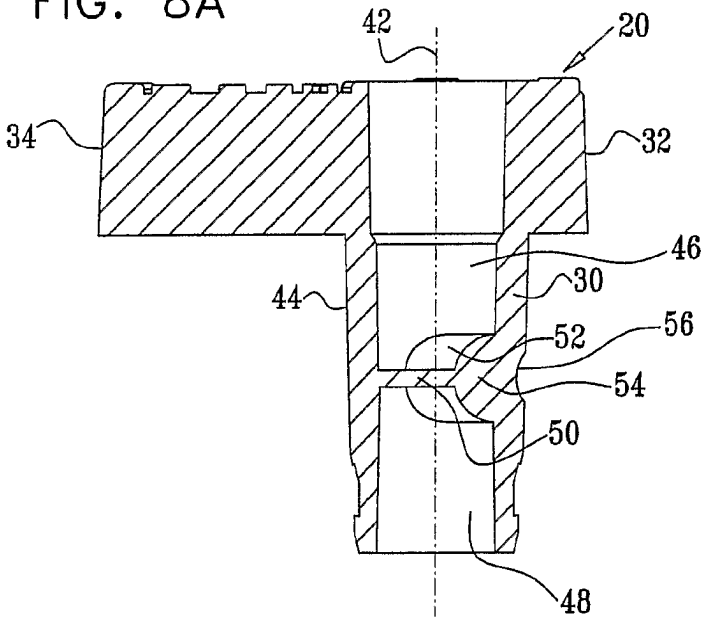


FIG. 8B

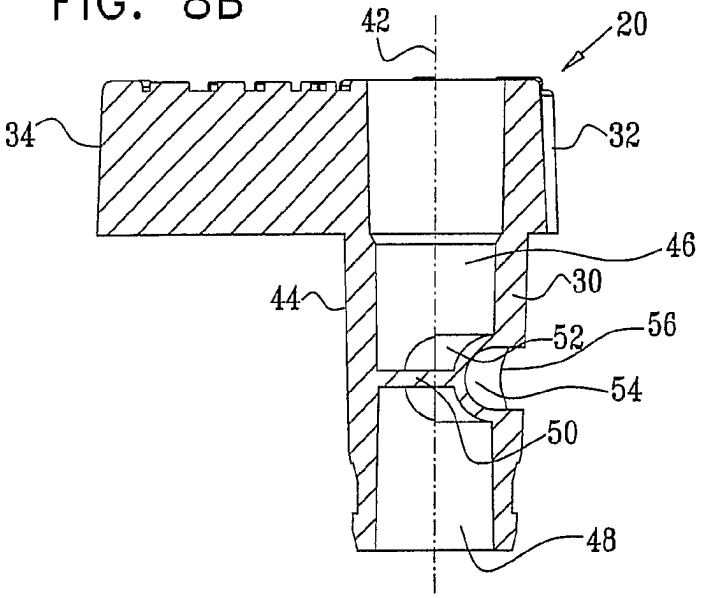

FIG. 9A

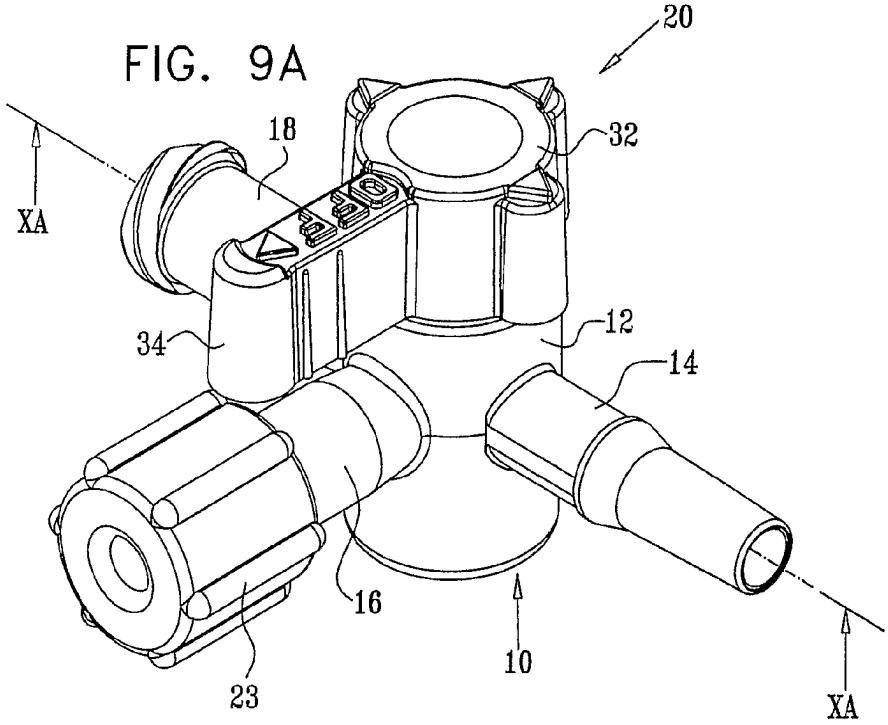


FIG. 9B

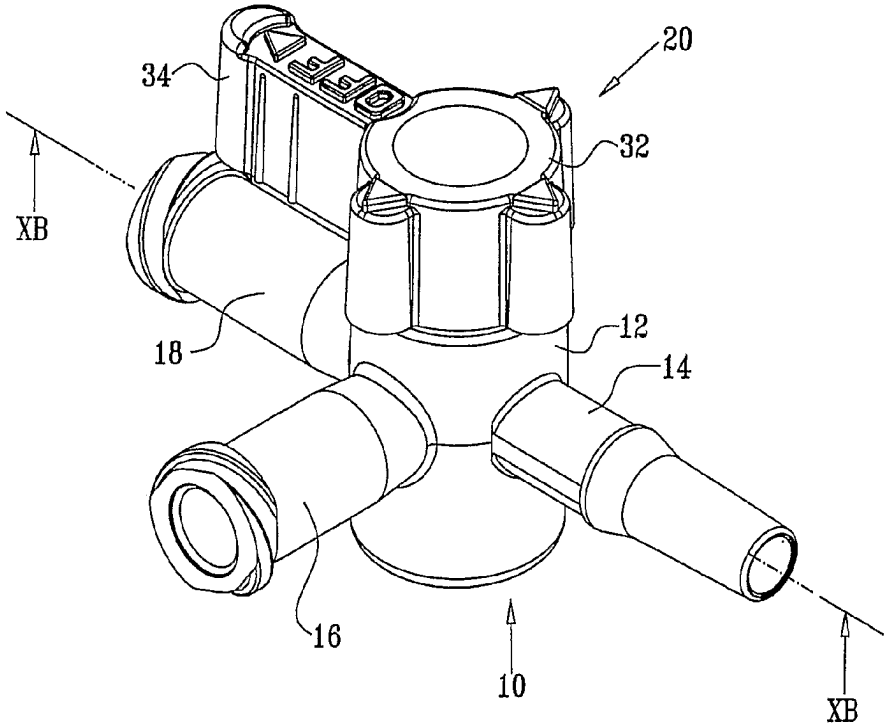

FIG. 9C

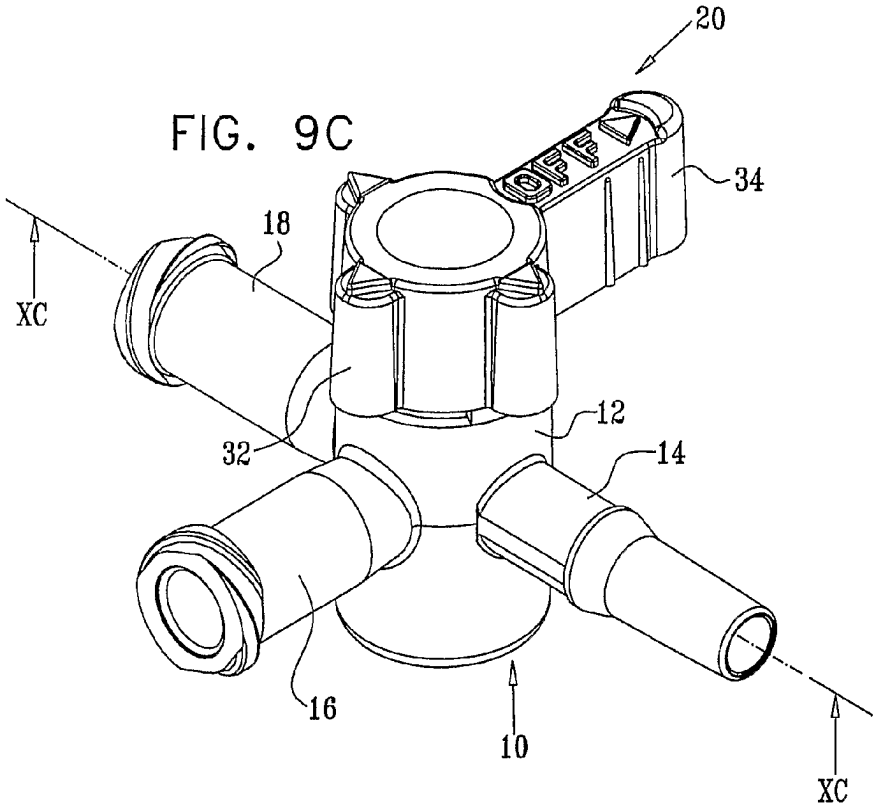


FIG. 9D

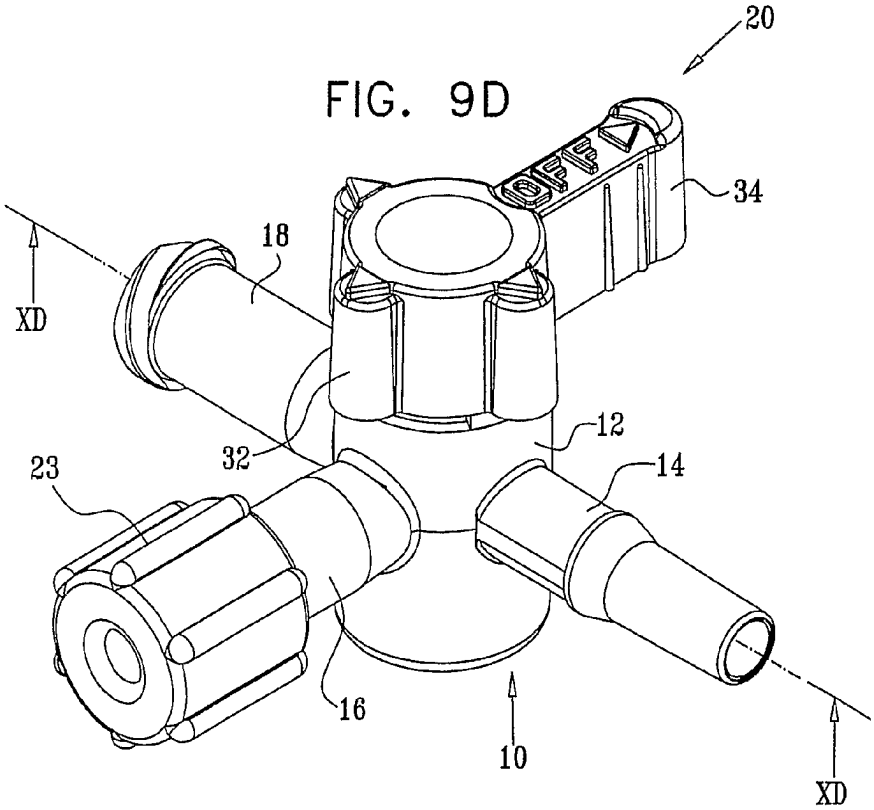

FIG. 9E

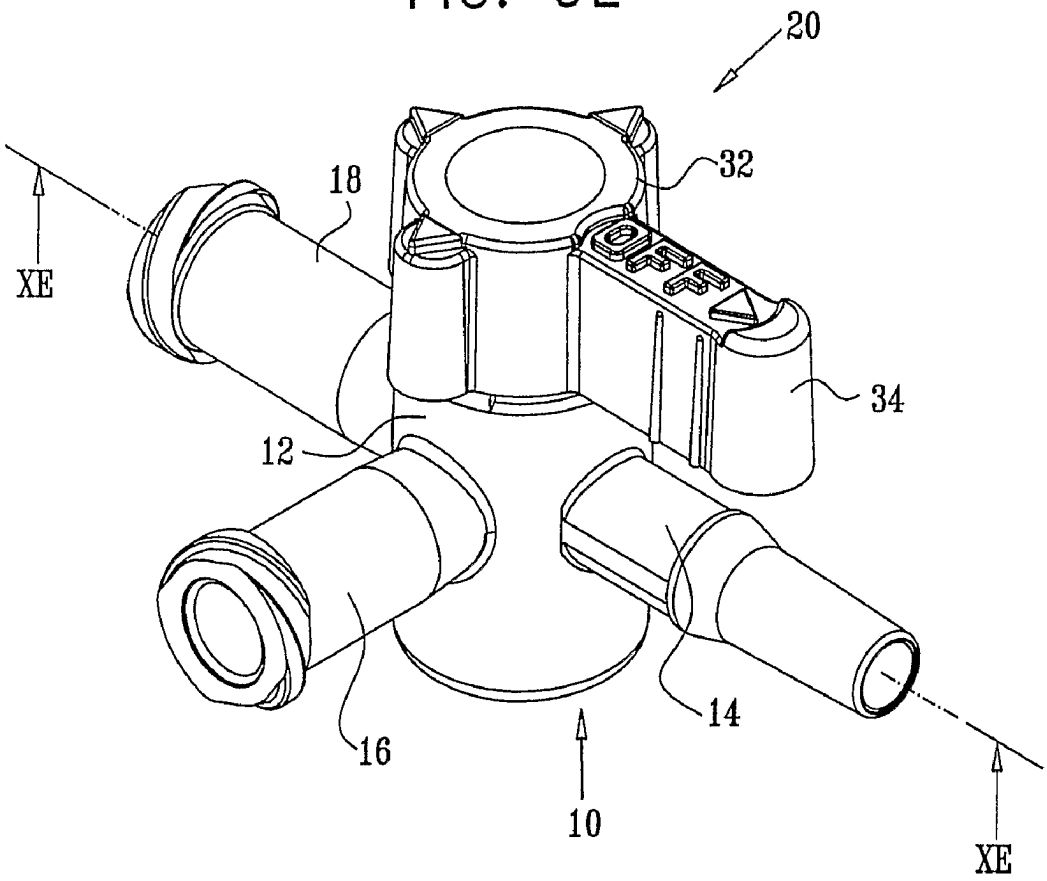

FIG. 10A

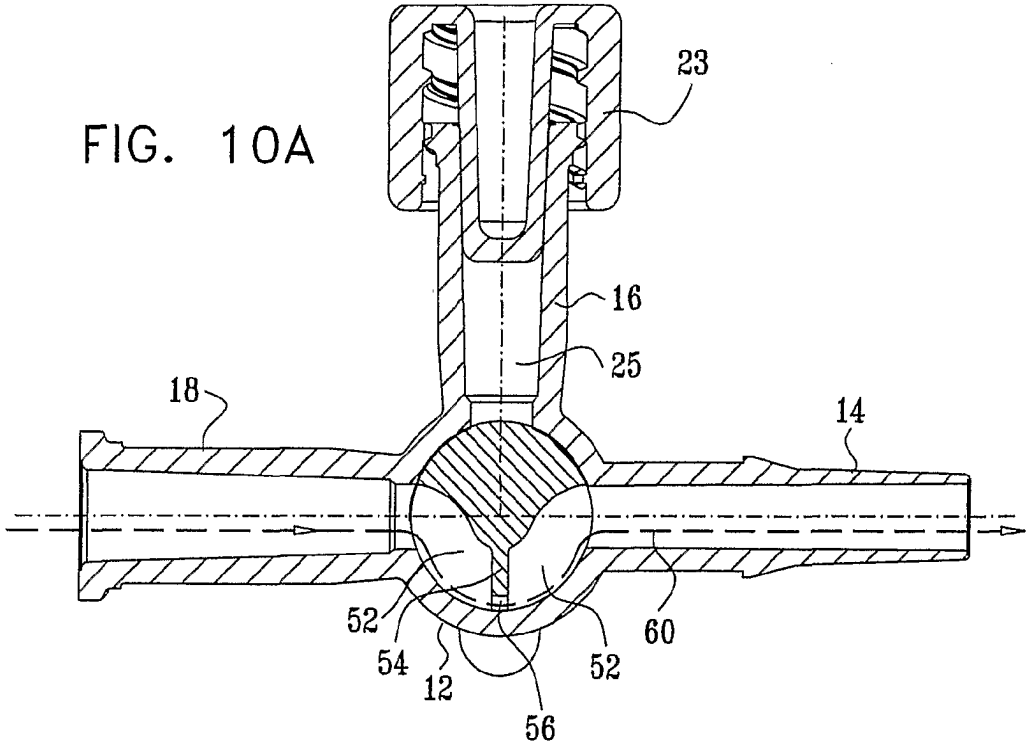


FIG. 10B

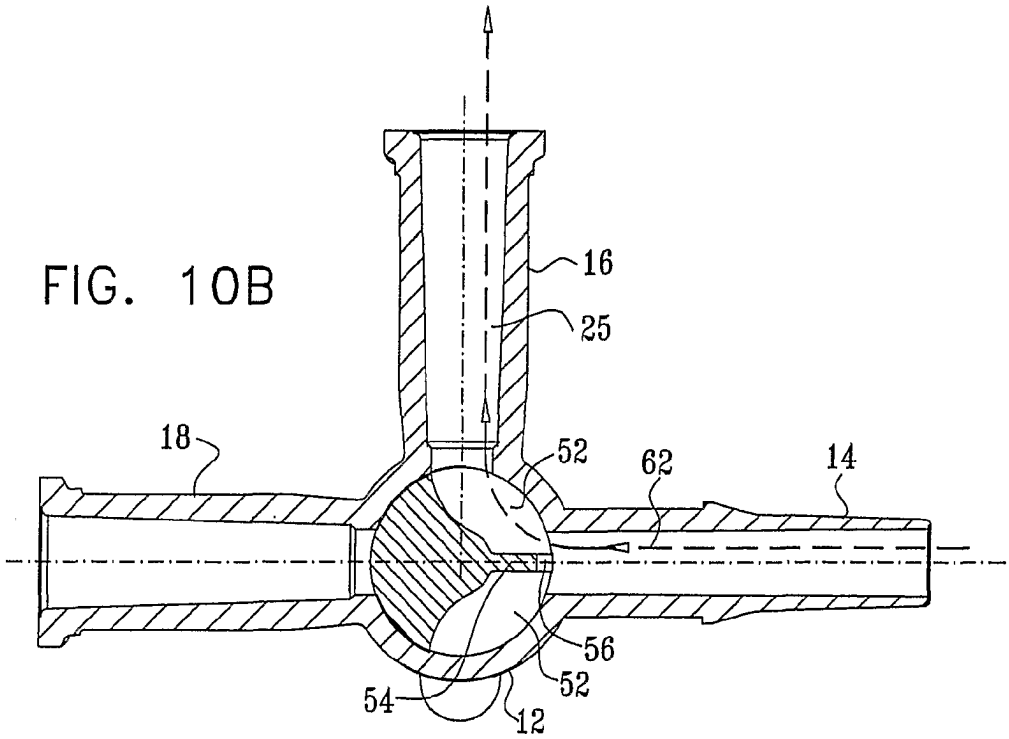

FIG. 10C

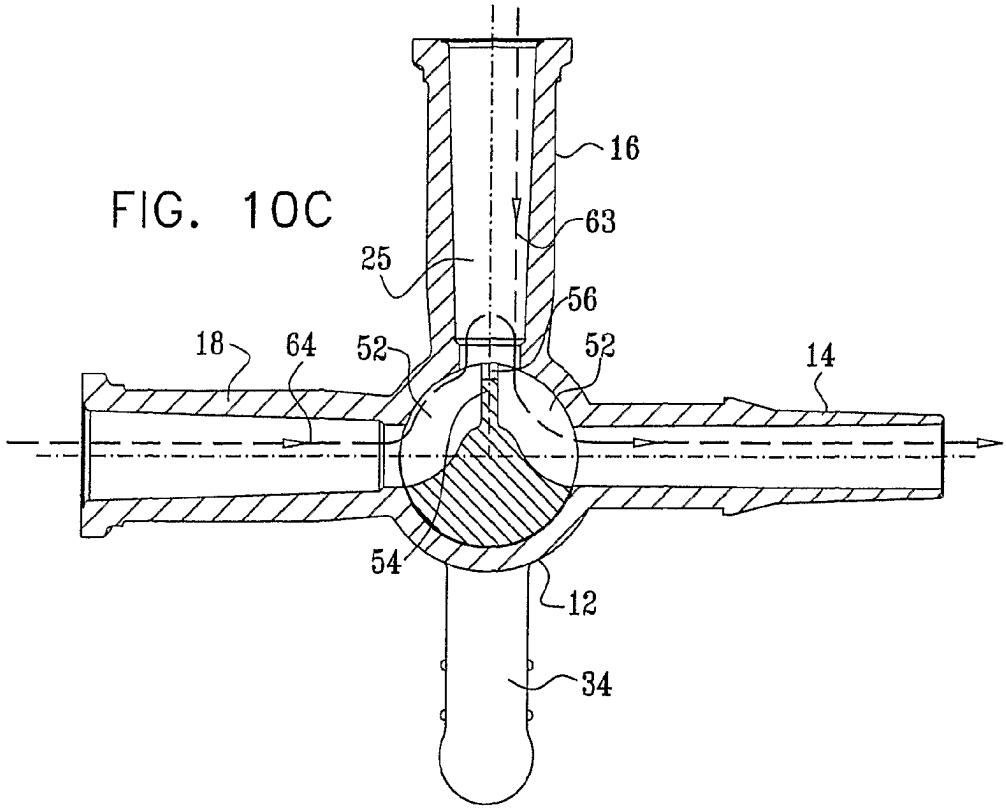


FIG. 10D

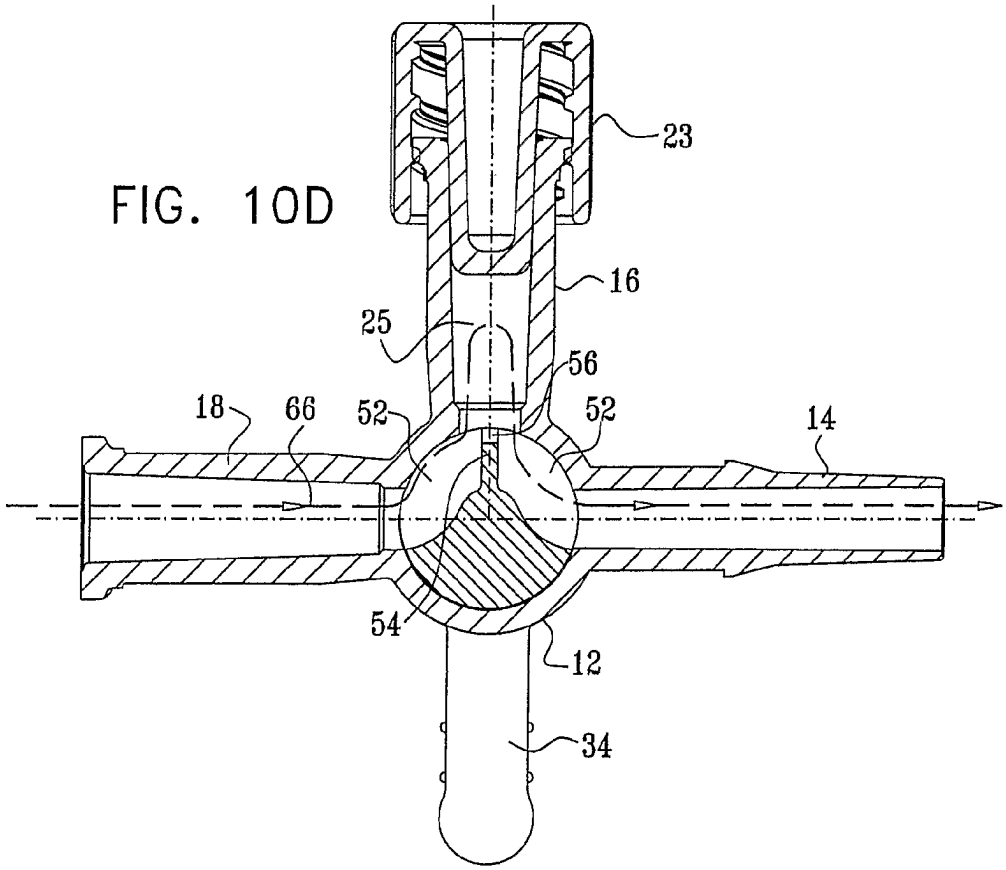

FIG. 10E

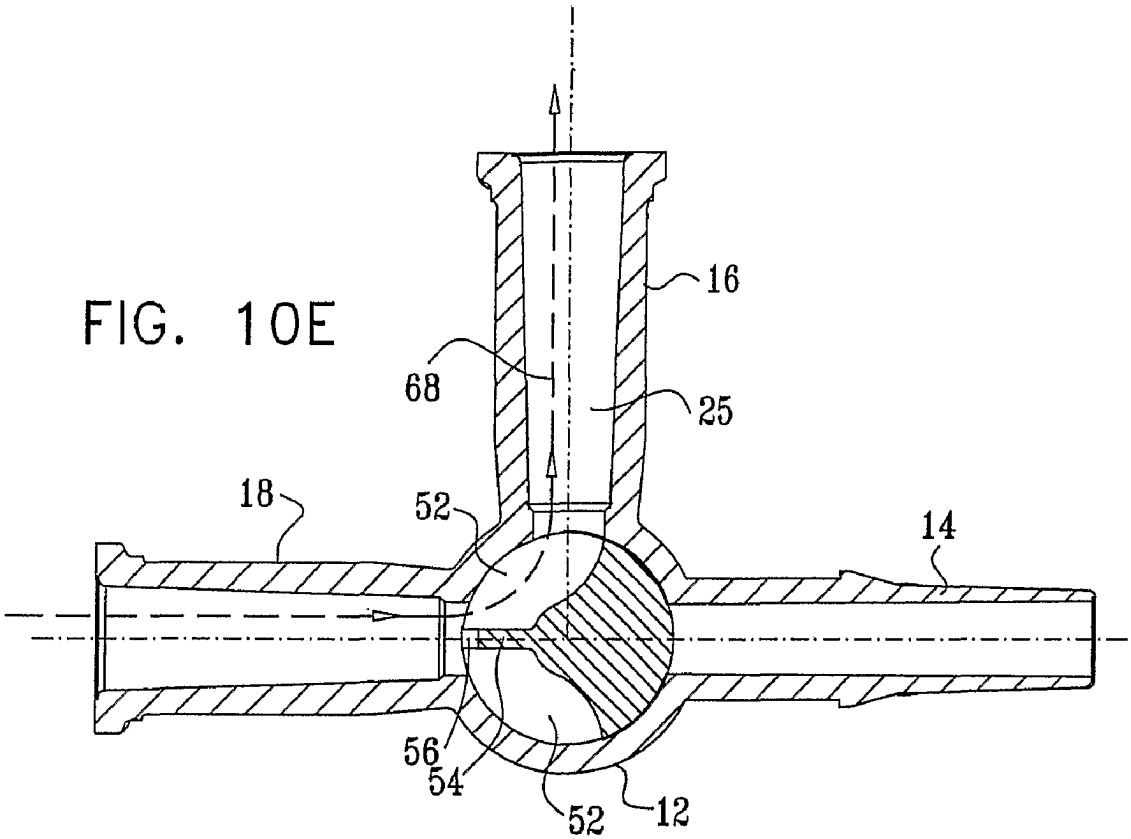

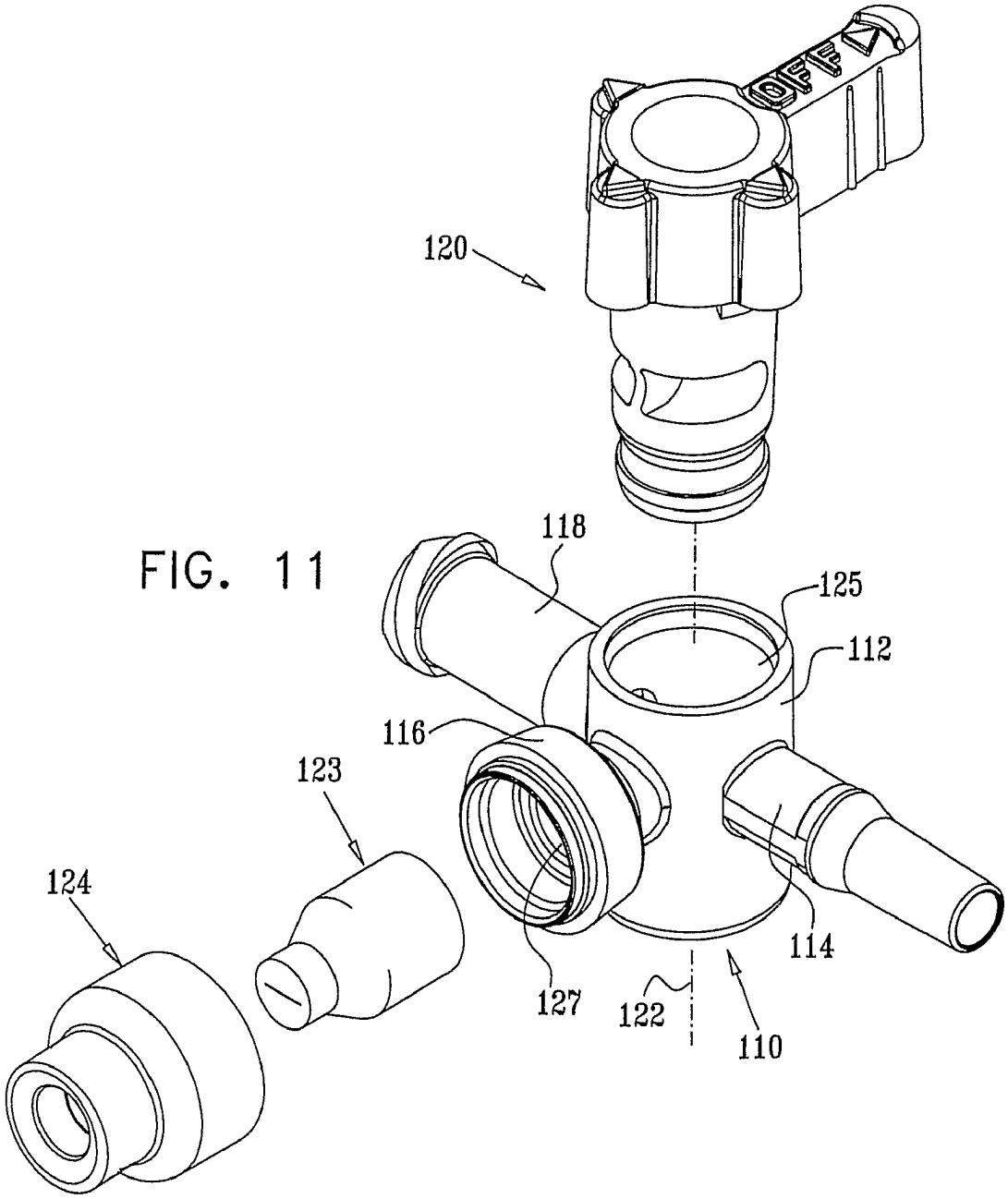


FIG. 11

FIG. 12

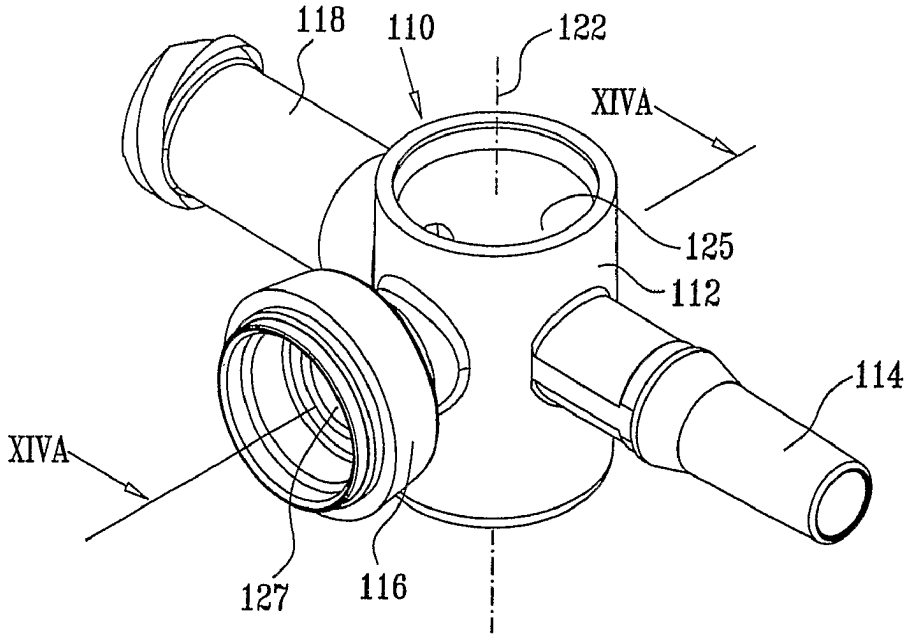
118
110
122
XIVA
125
112
114
XIVA
127
116

FIG. 13

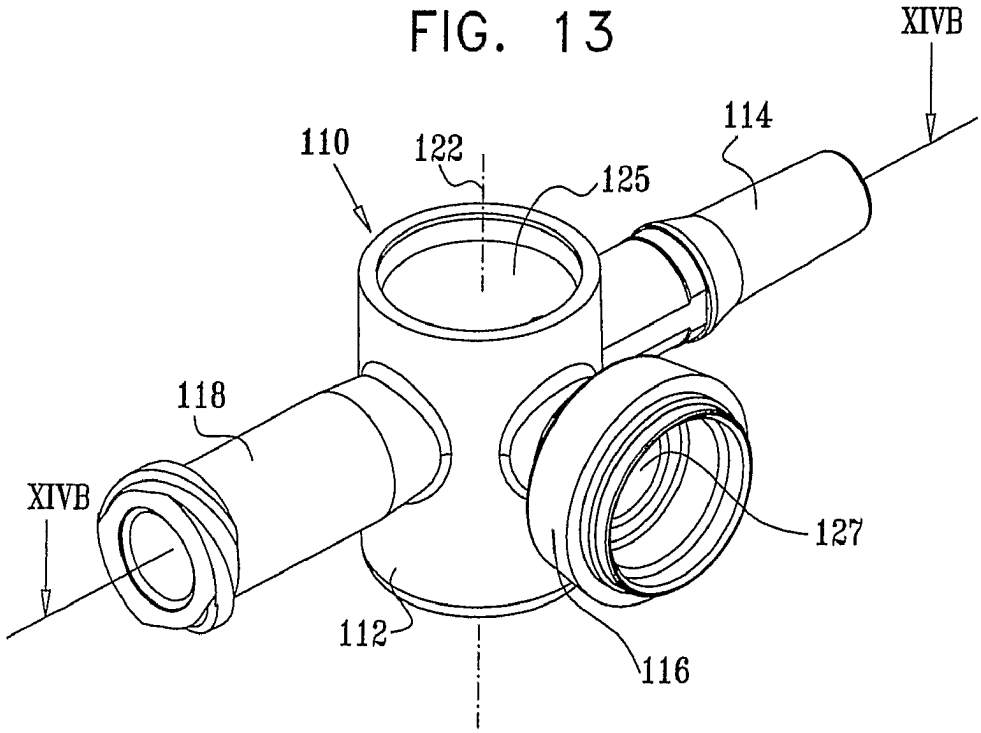
XIVB
114
110
122
125
118
XIVB
127
112
116

FIG. 14A

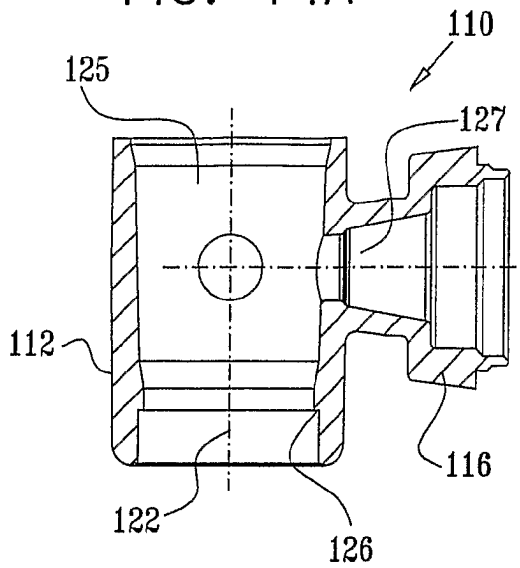


FIG. 14B

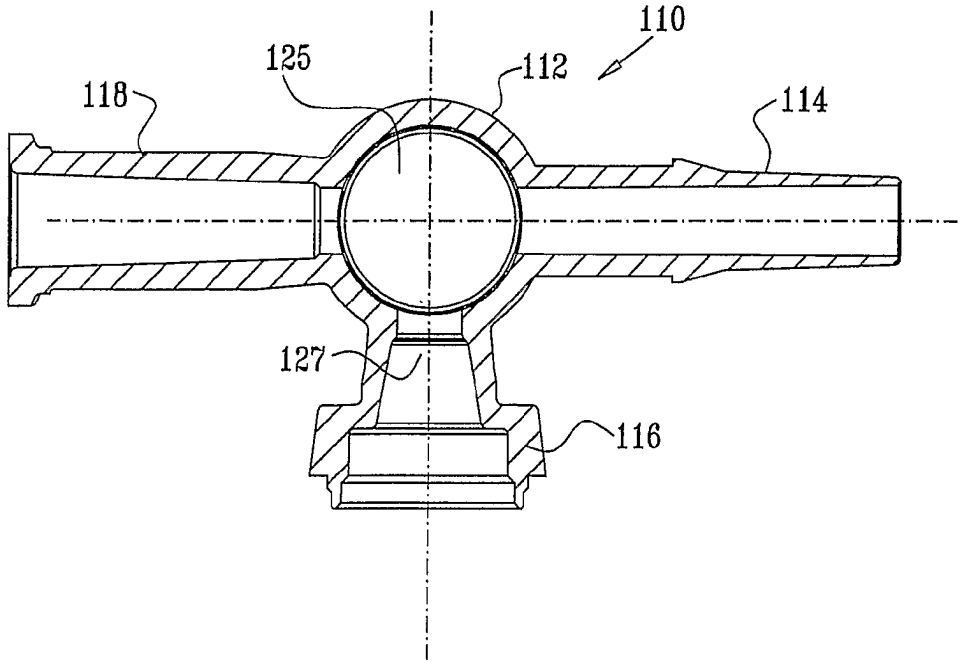

FIG. 15A

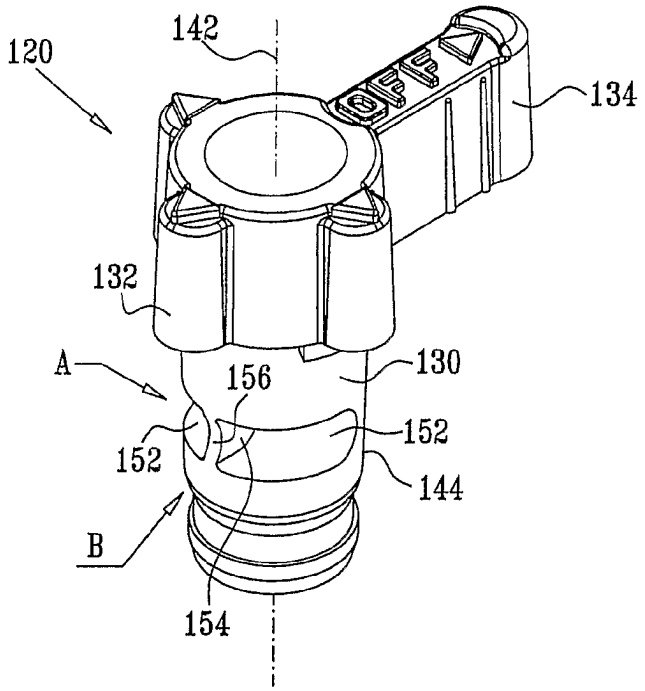


FIG. 15B

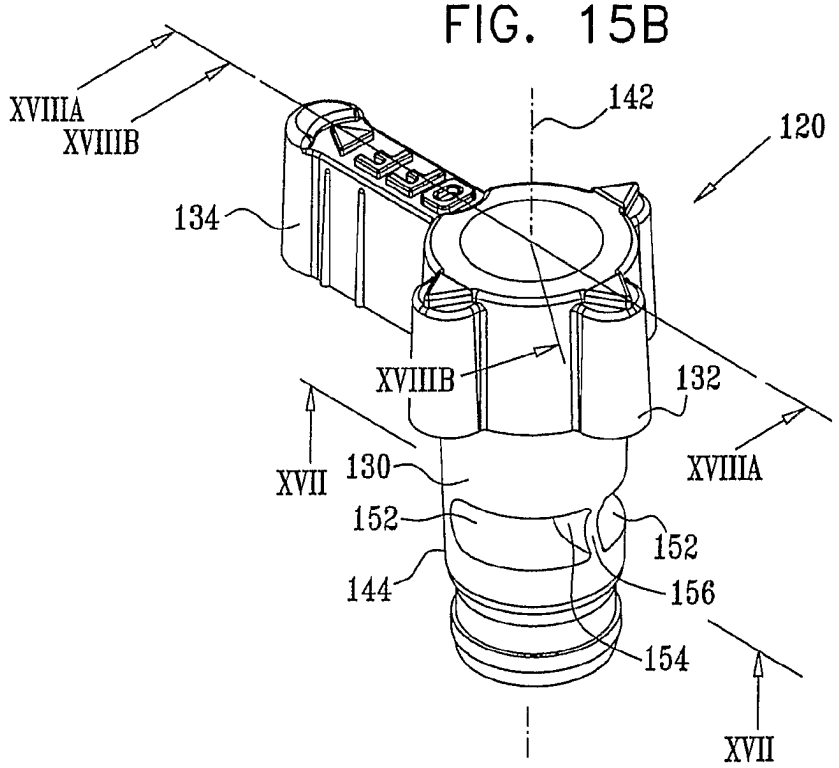

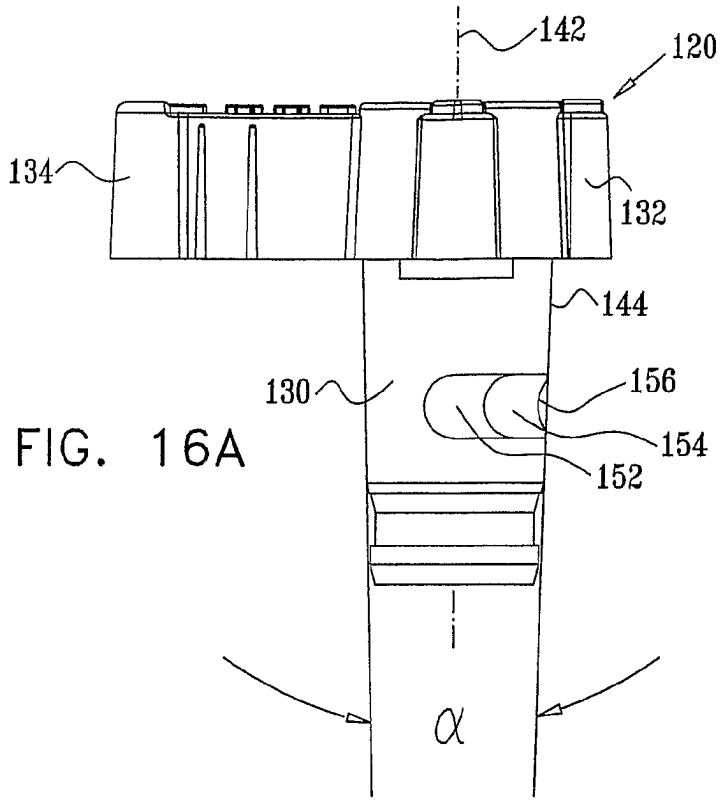


FIG. 16A

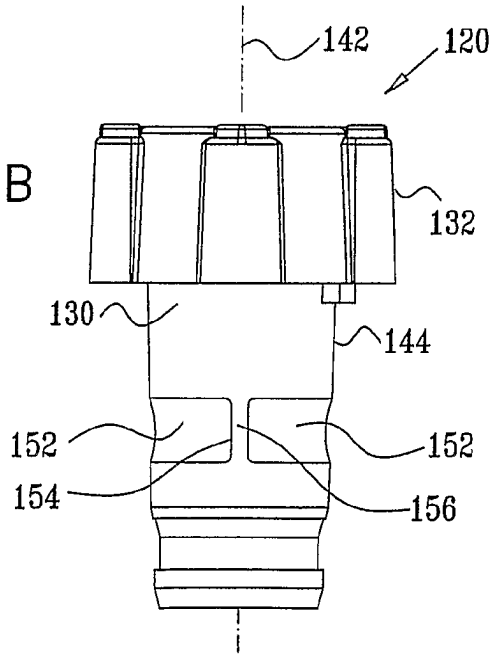


FIG. 16B

FIG. 17

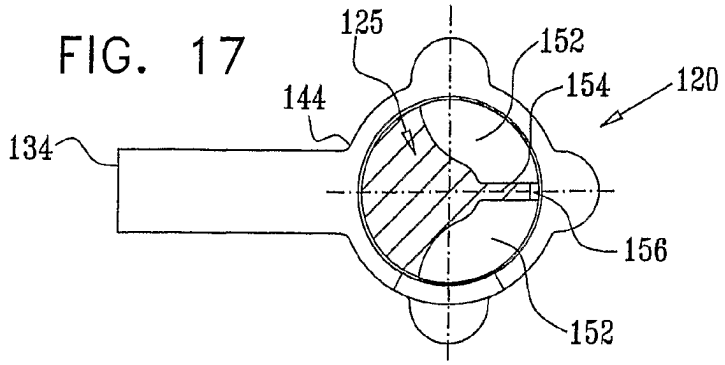


FIG. 18A

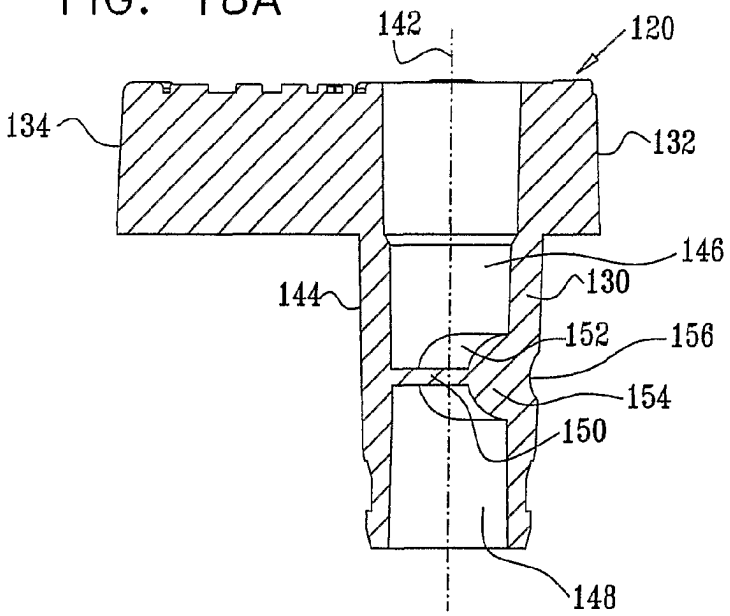


FIG. 18B

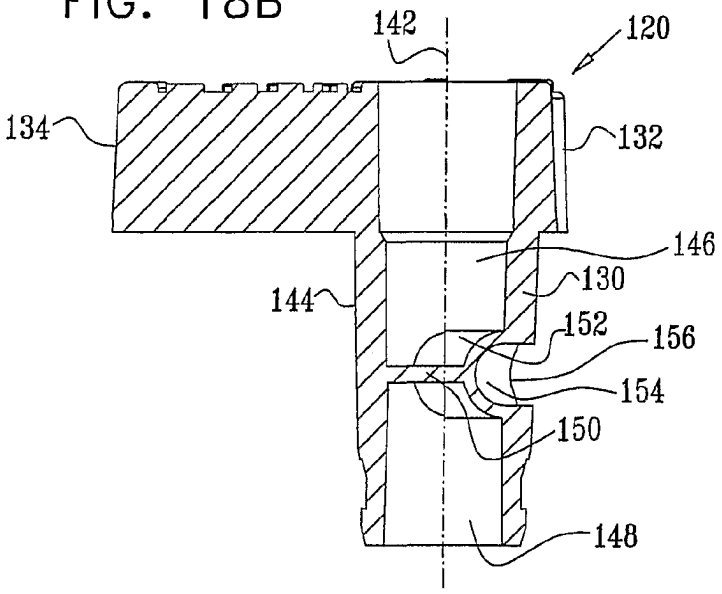

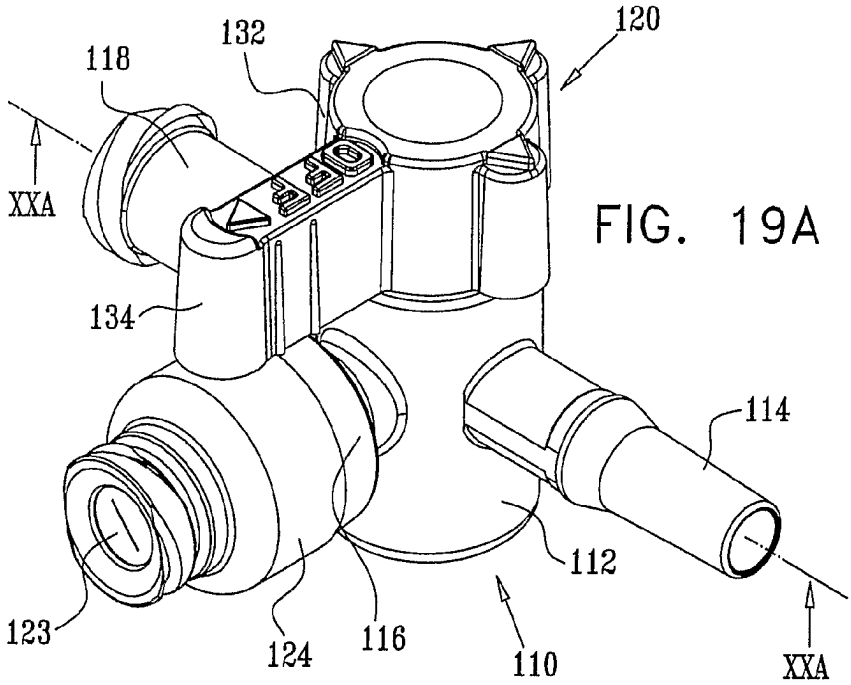


FIG. 19A

FIG. 19B

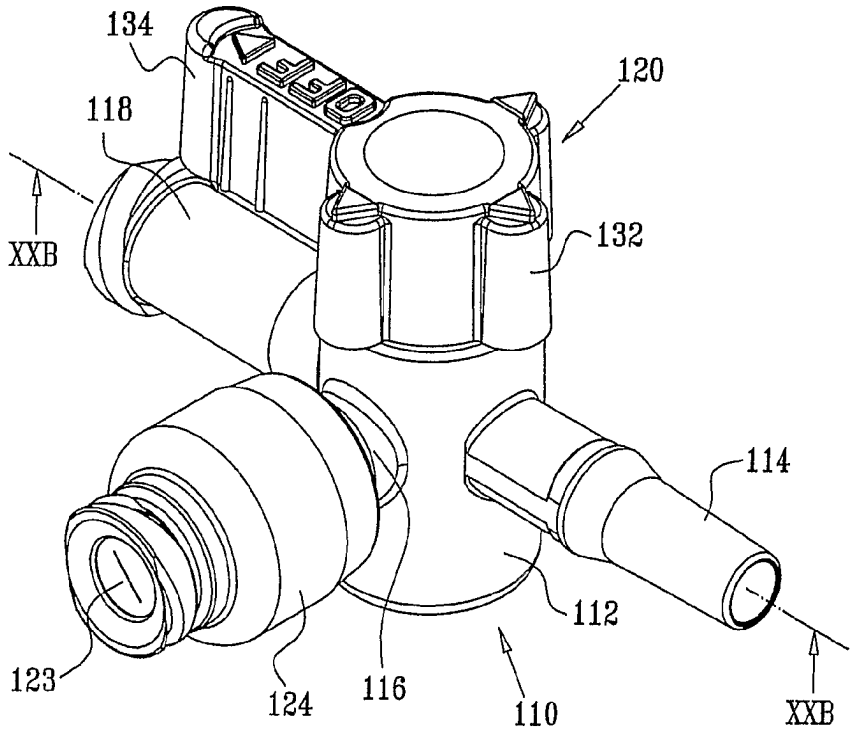

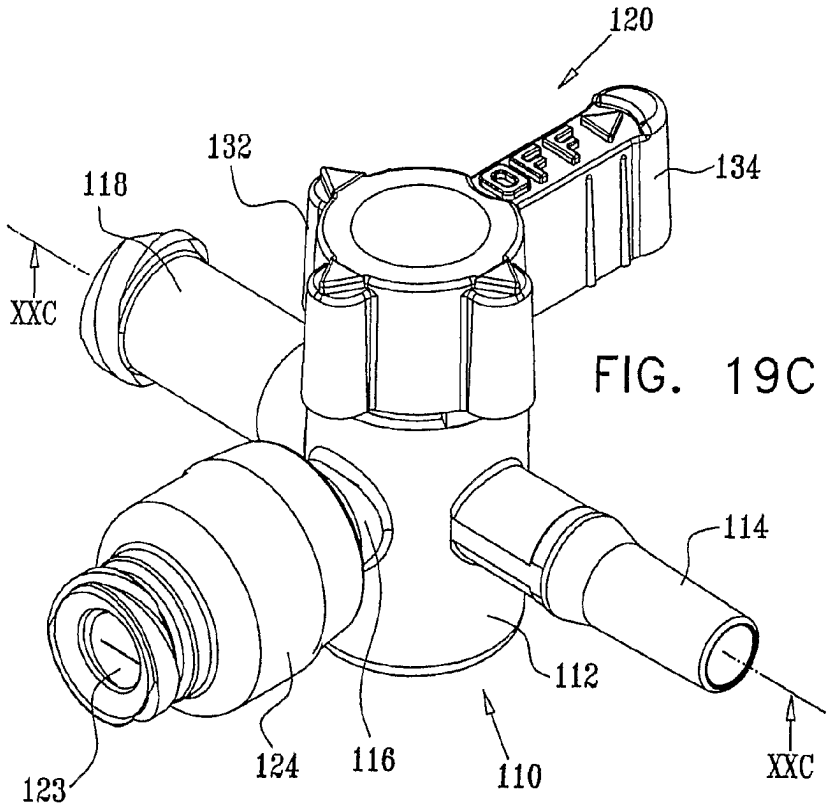


FIG. 19C

FIG. 19D

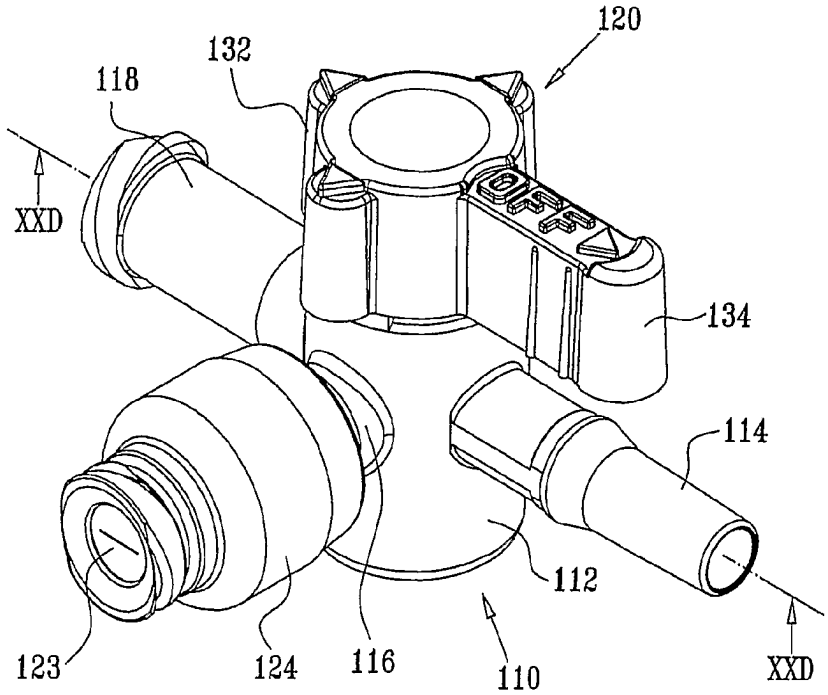

FIG. 20A

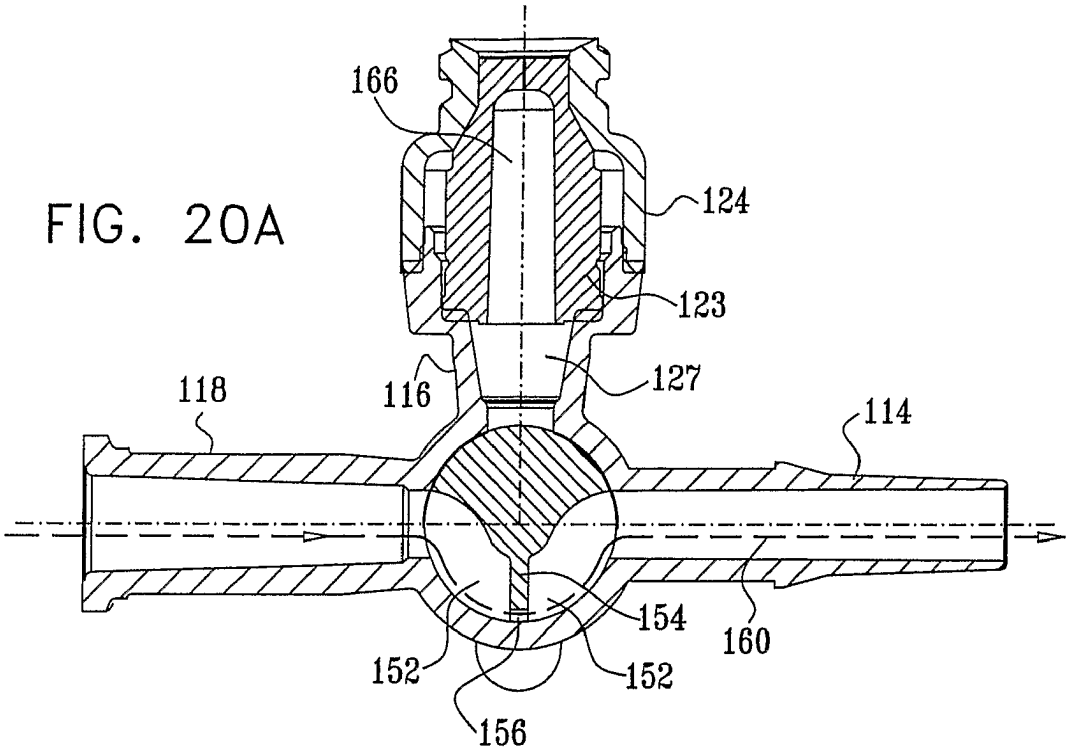


FIG. 20B

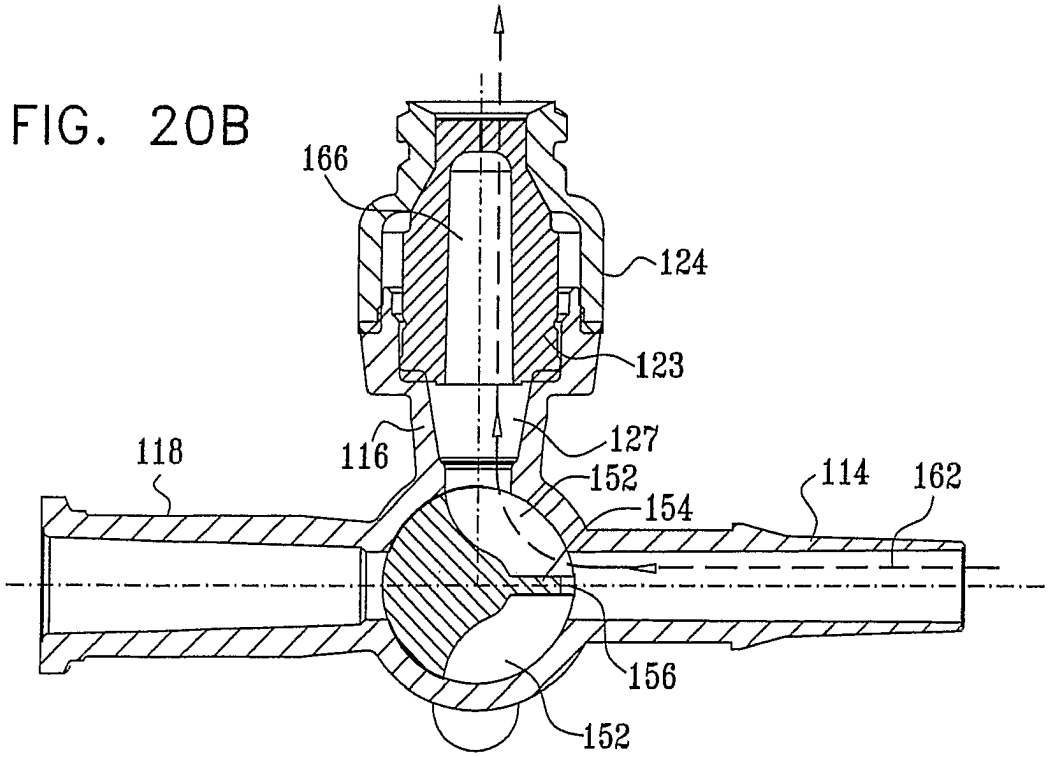

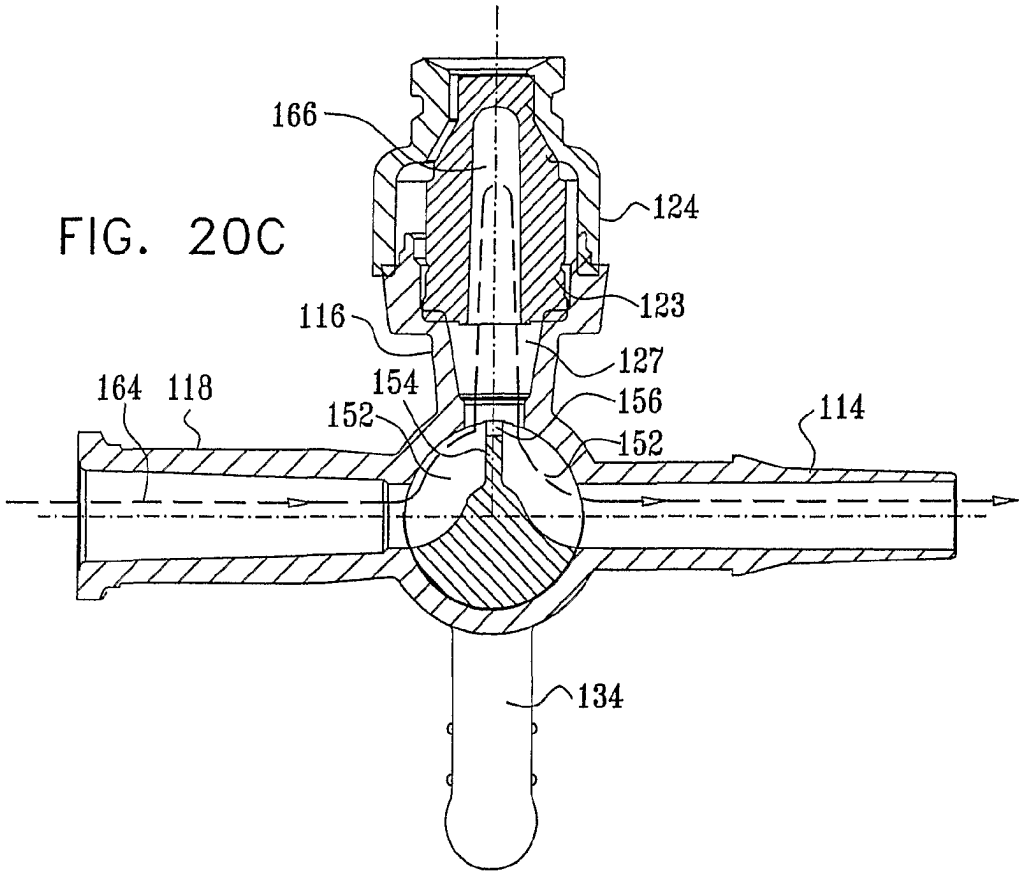


FIG. 20C

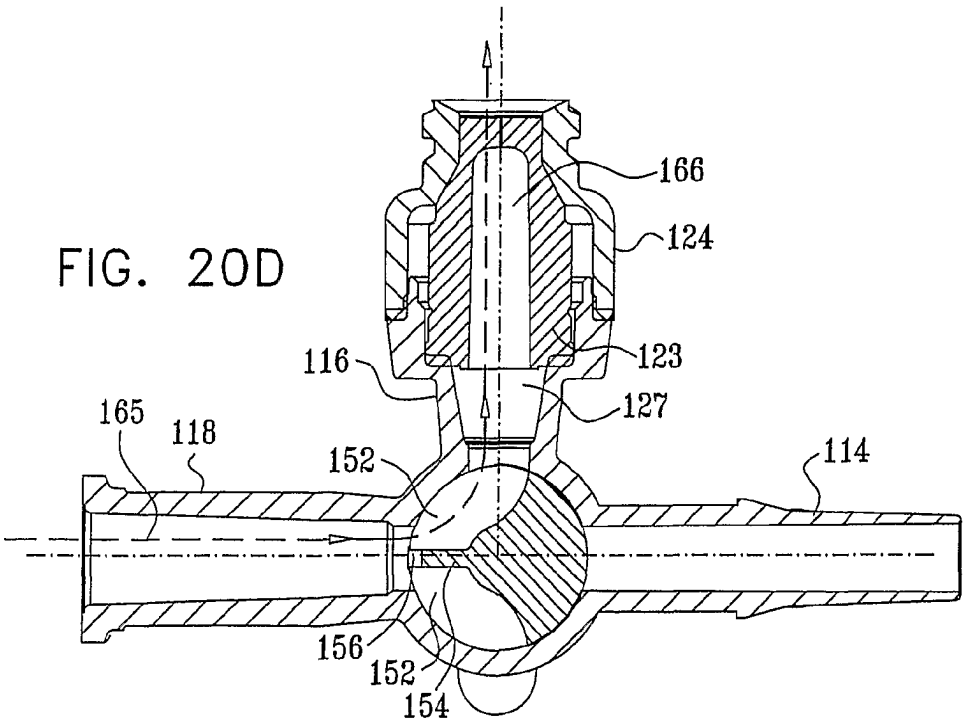


FIG. 20D

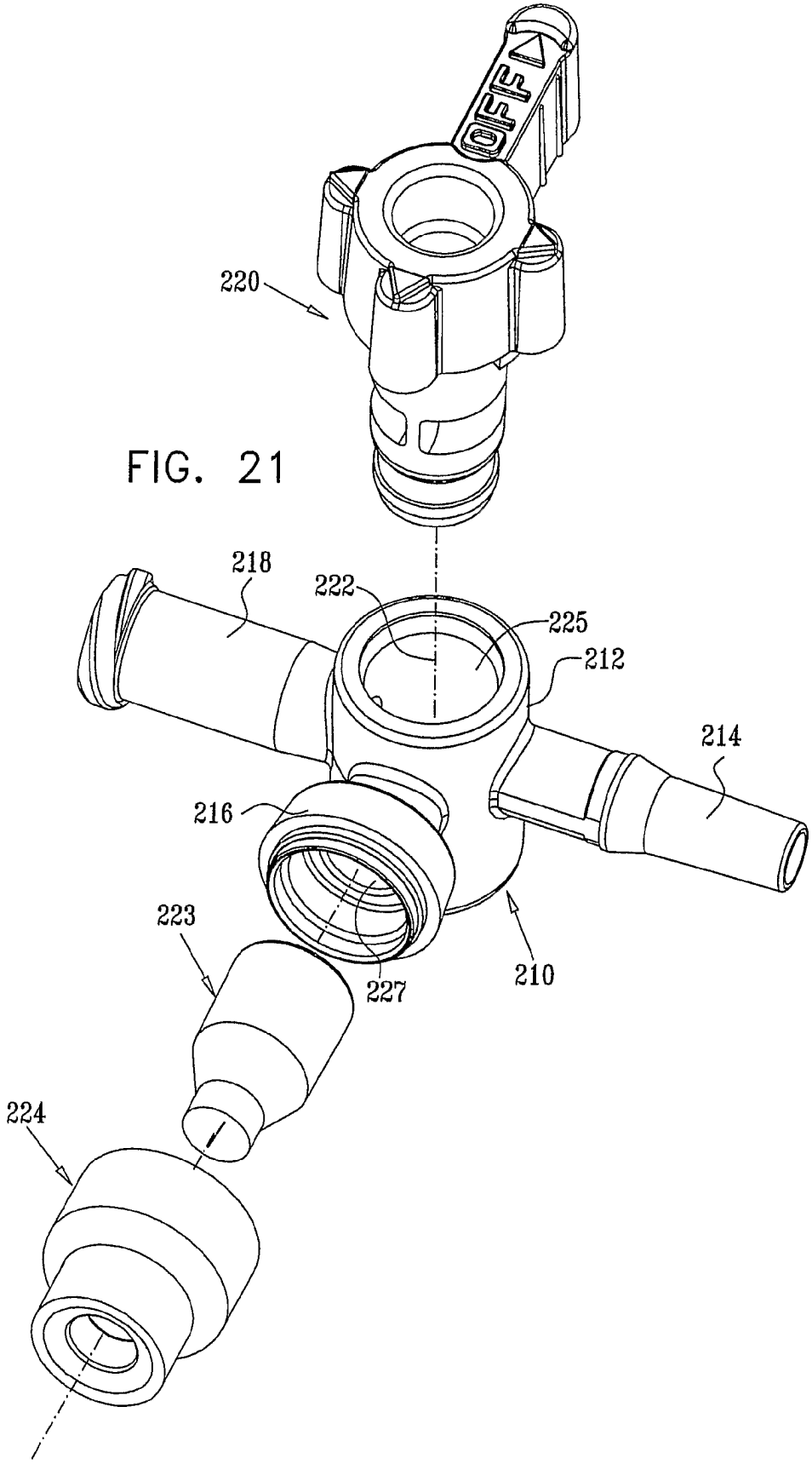


FIG. 21

FIG. 22

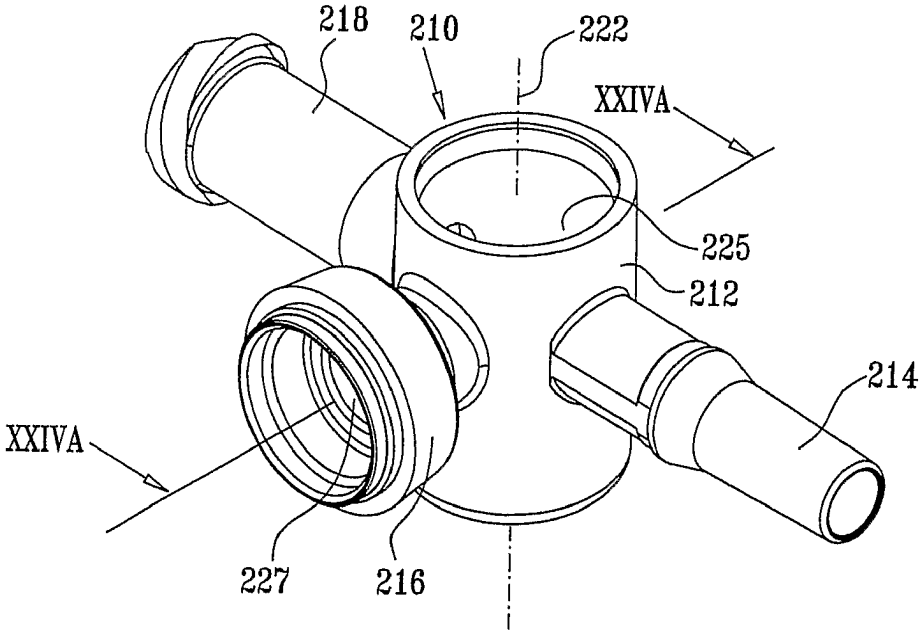
218
210
222
XXIVA
225
212
214
XXIVA
227
216

FIG. 23

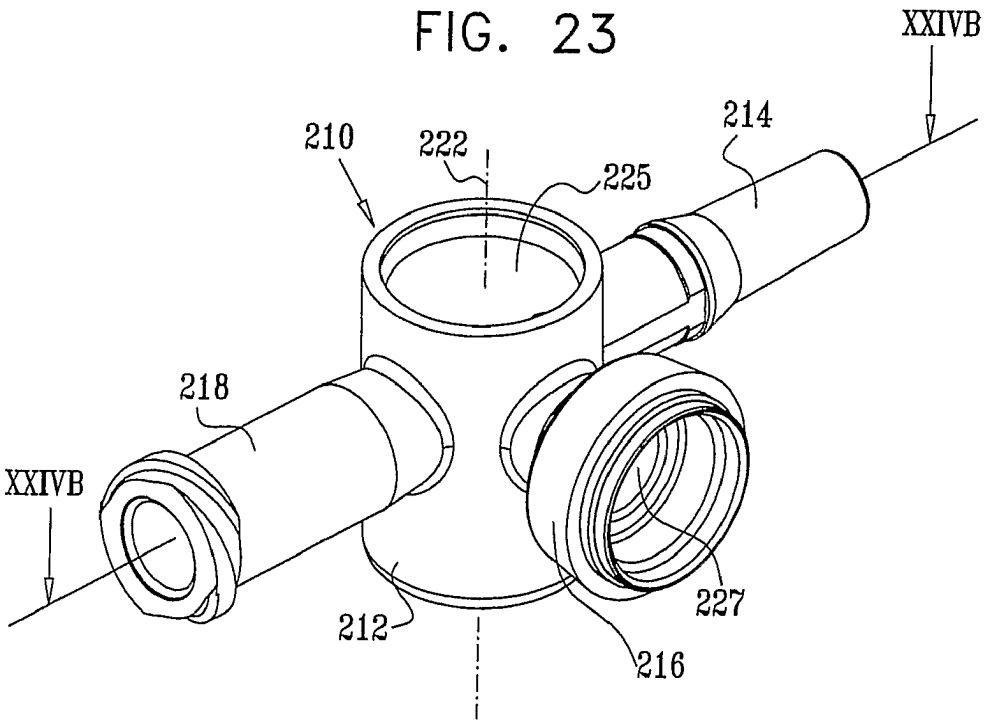
XXIVB
214
210
222
225
218
XXIVB
227
212
216

FIG. 24A

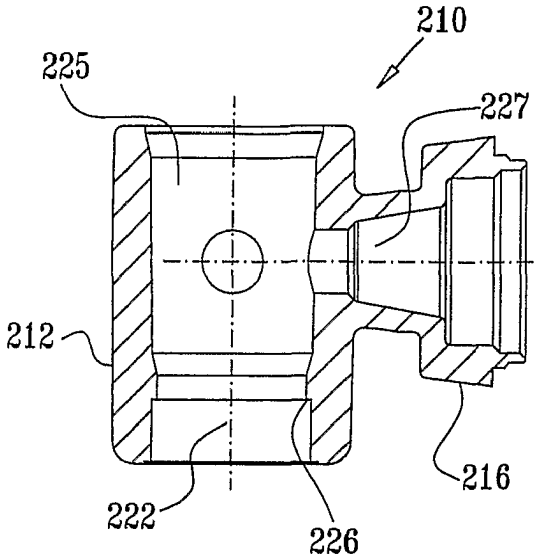


FIG. 24B

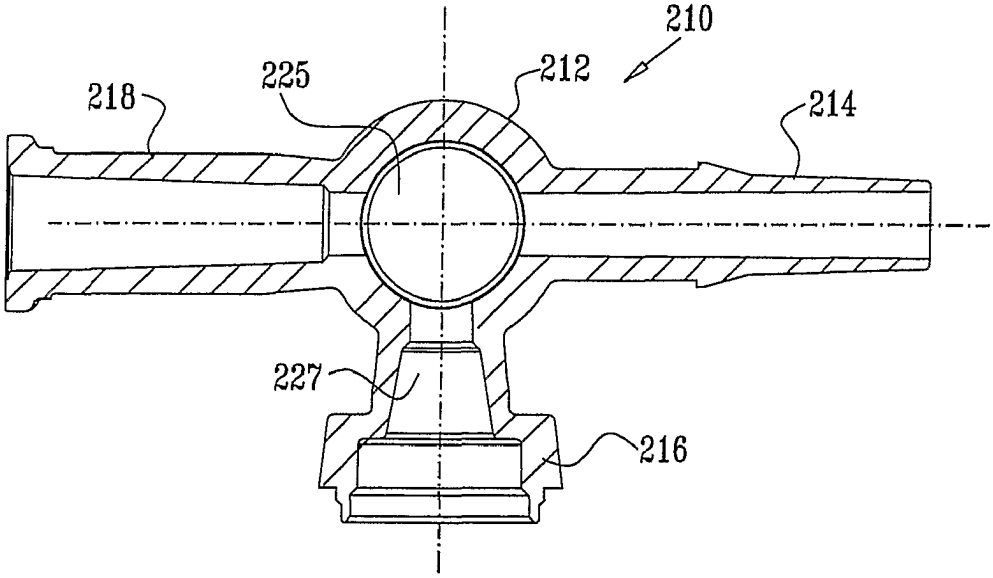

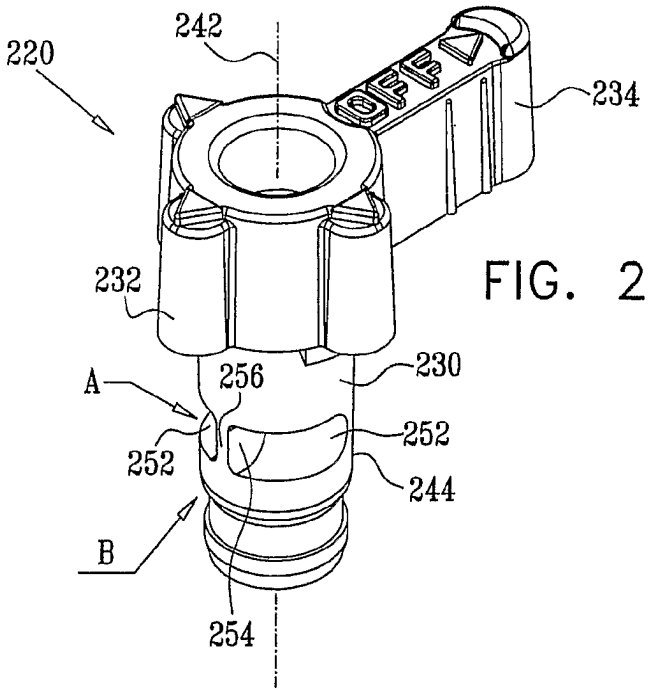


FIG. 25A

FIG. 25B

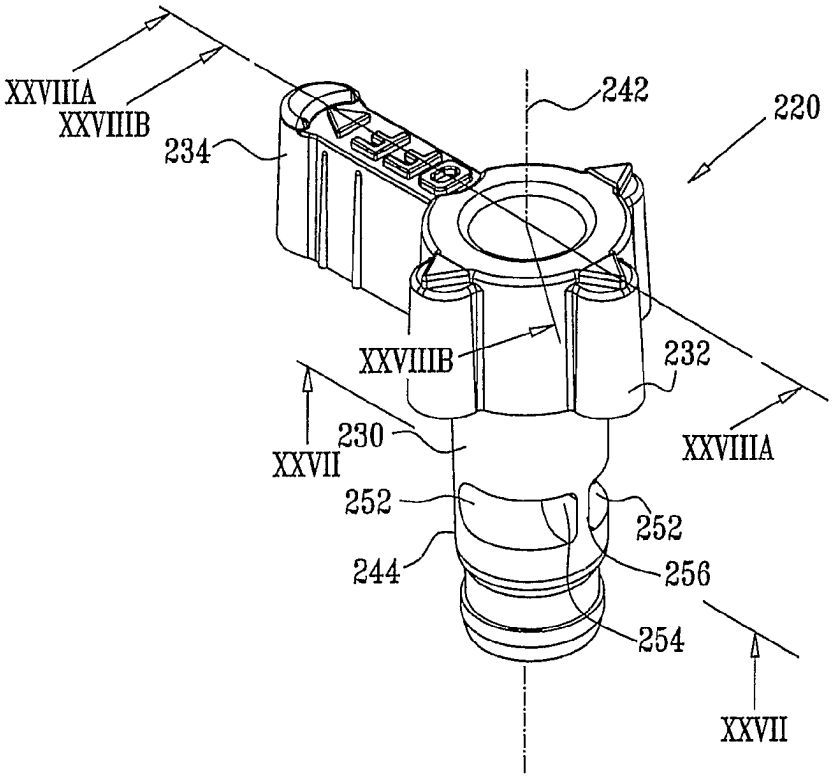

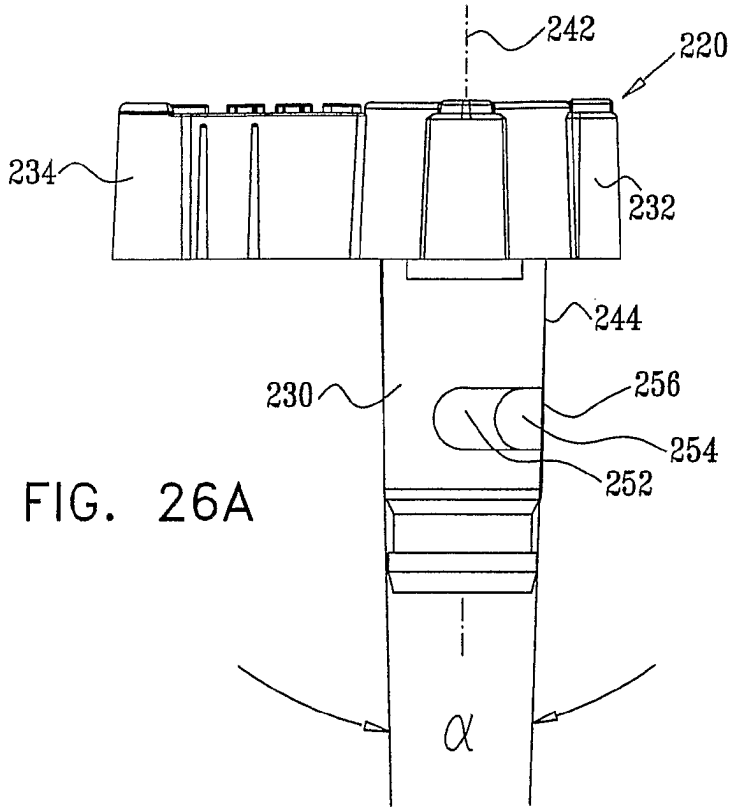


FIG. 26A

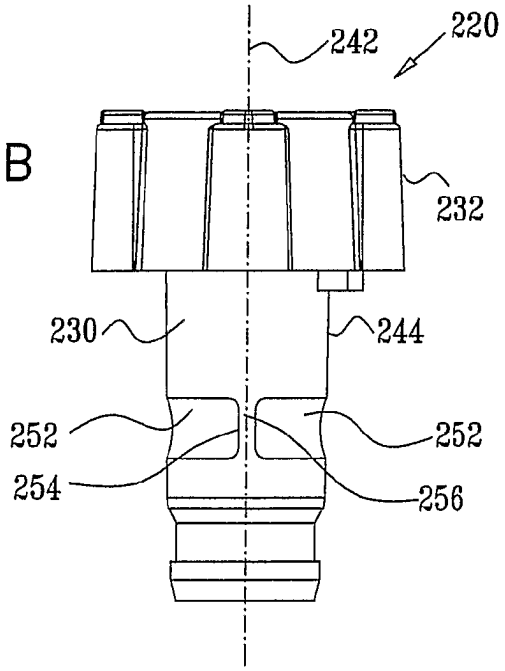


FIG. 26B

FIG. 27

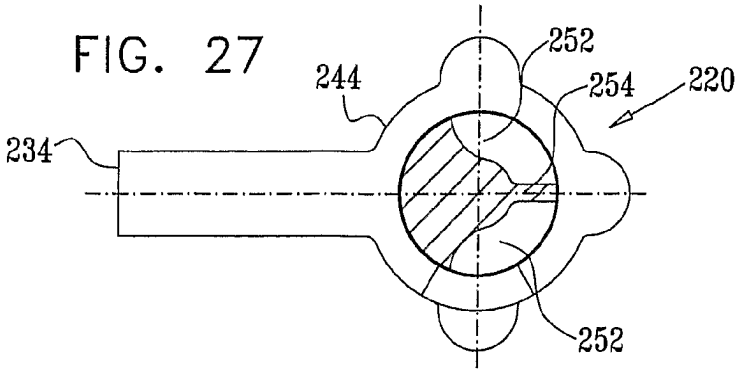


FIG. 28A

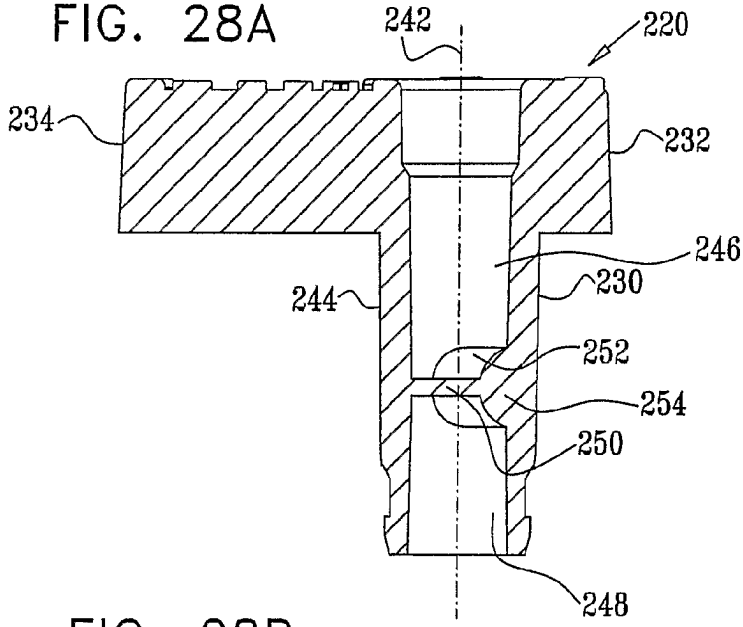


FIG. 28B

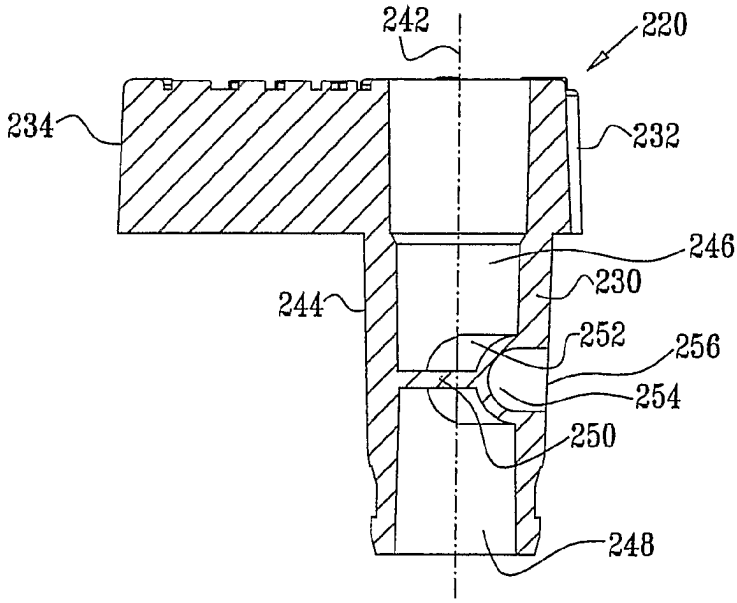

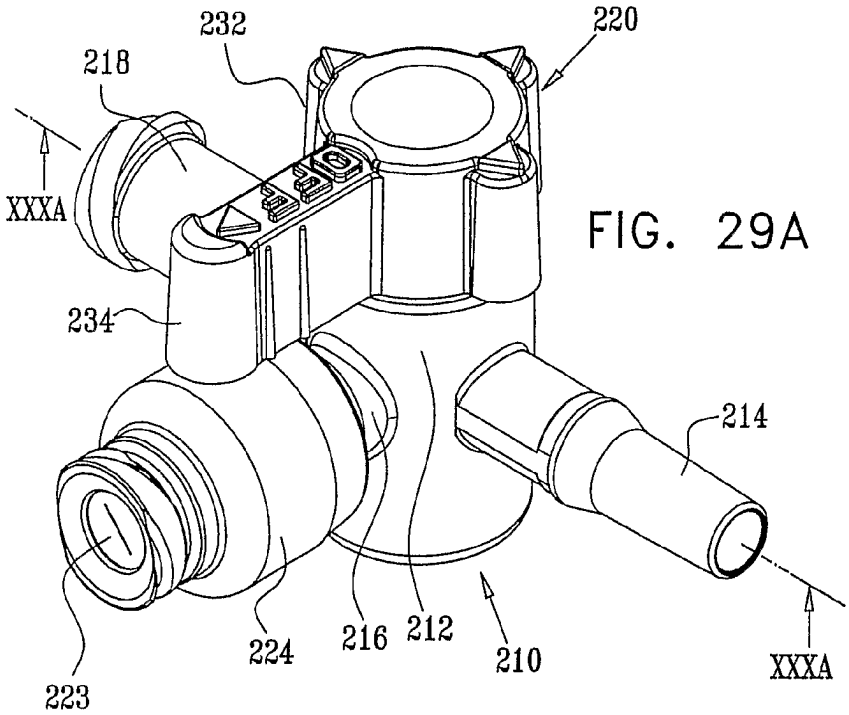


FIG. 29A

FIG. 29B

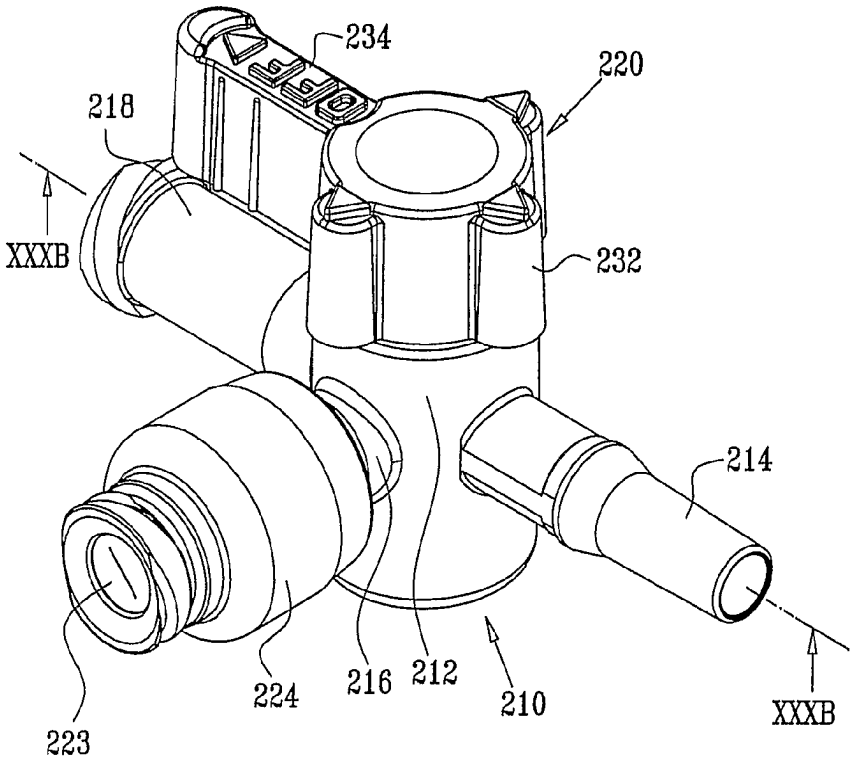

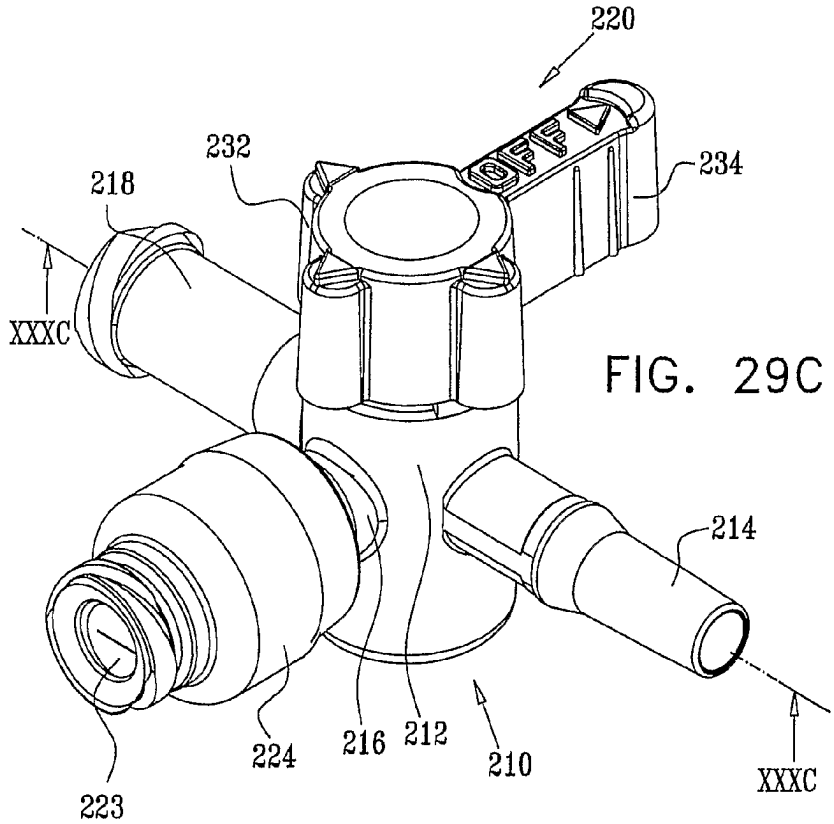


FIG. 29C

FIG. 29D

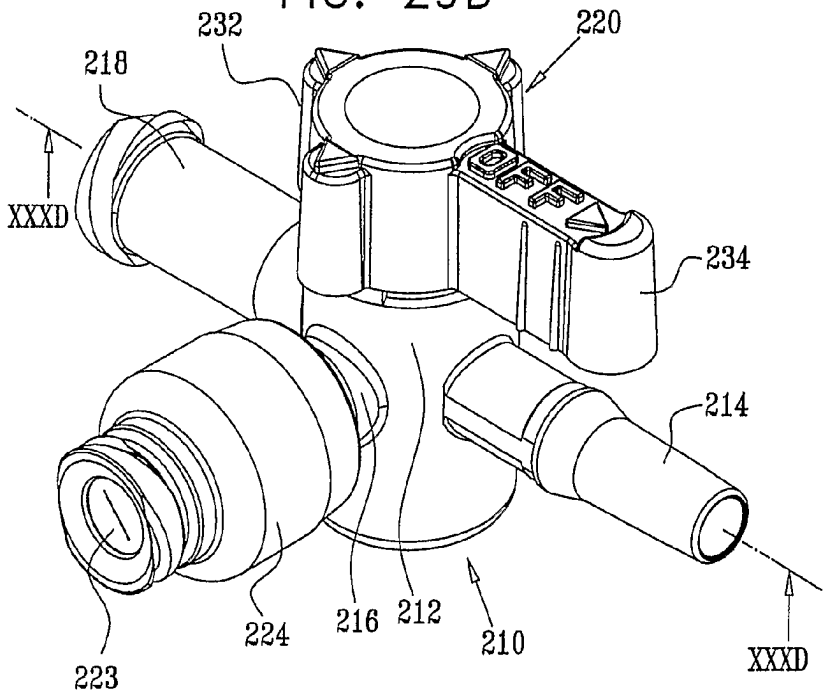

FIG. 30A

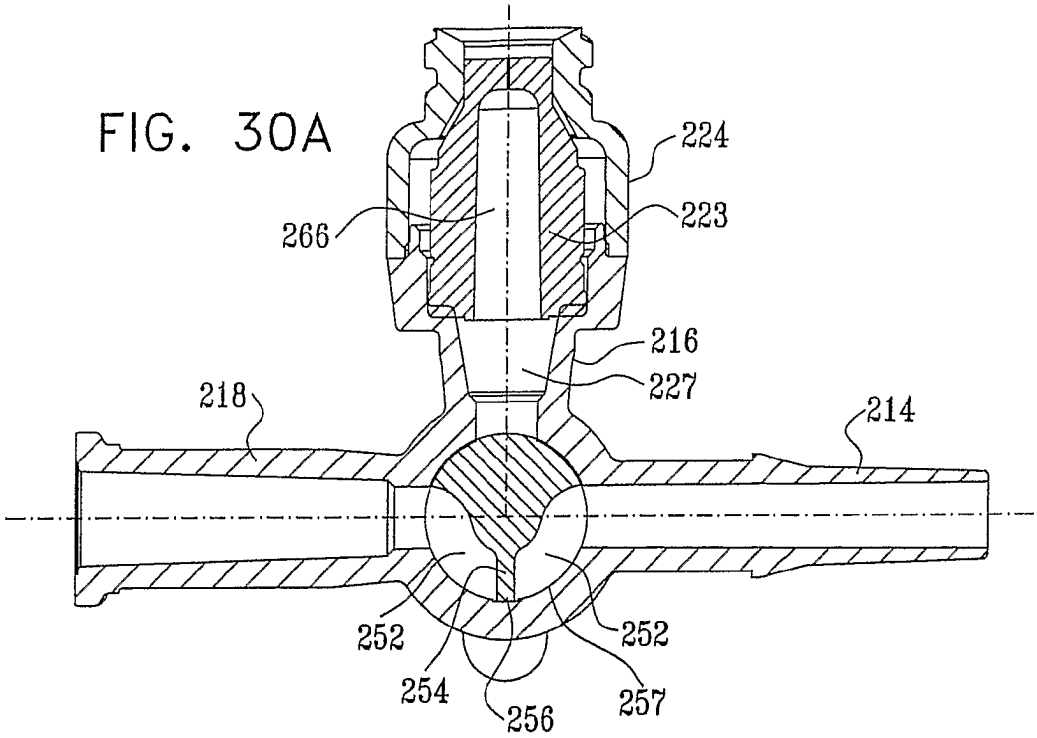


FIG. 30B

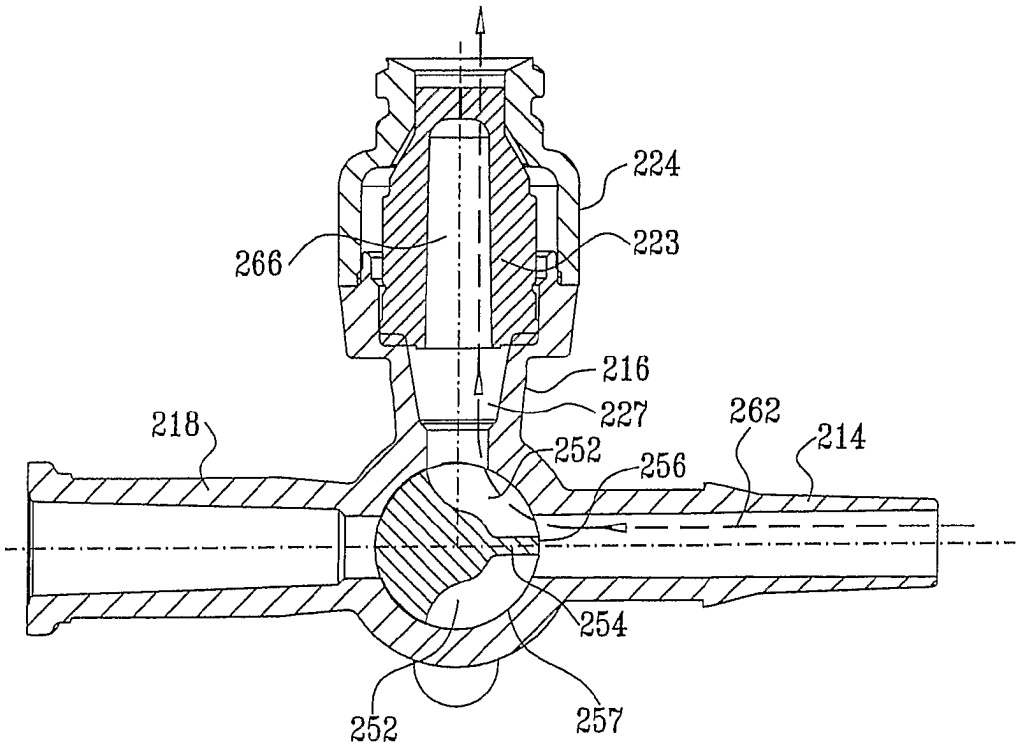

FIG. 30C

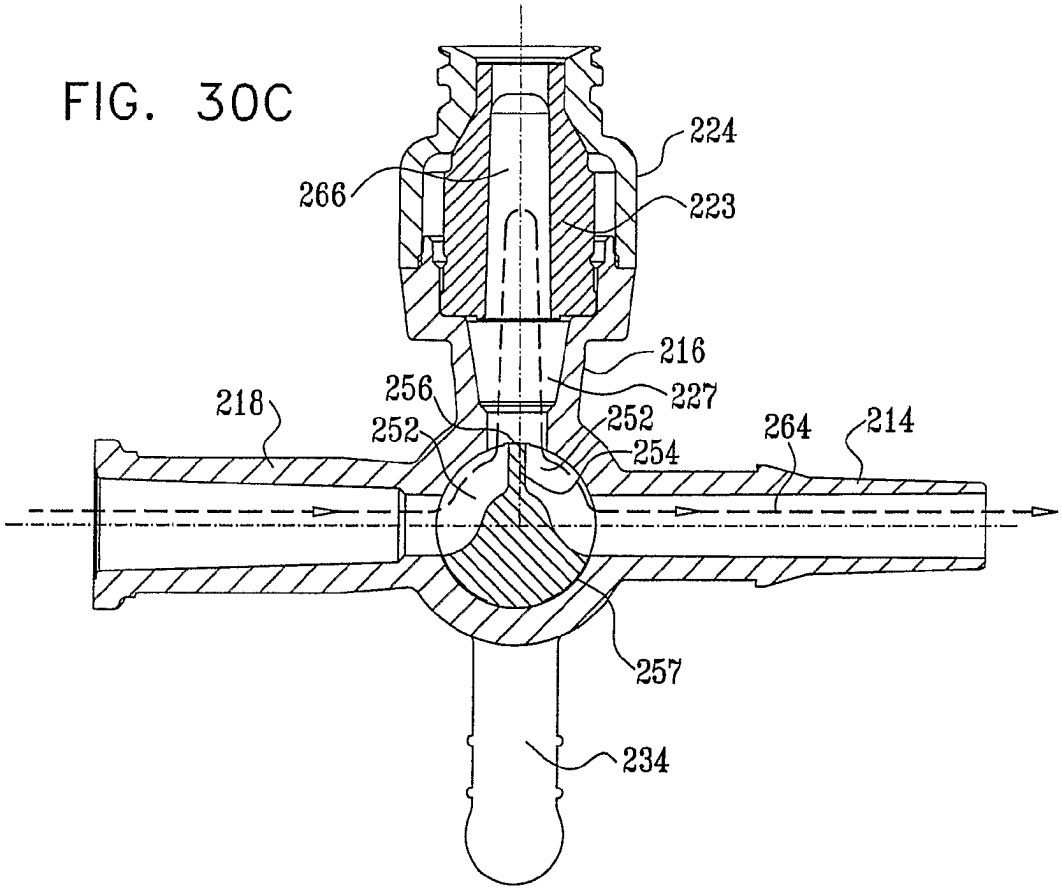


FIG. 30D

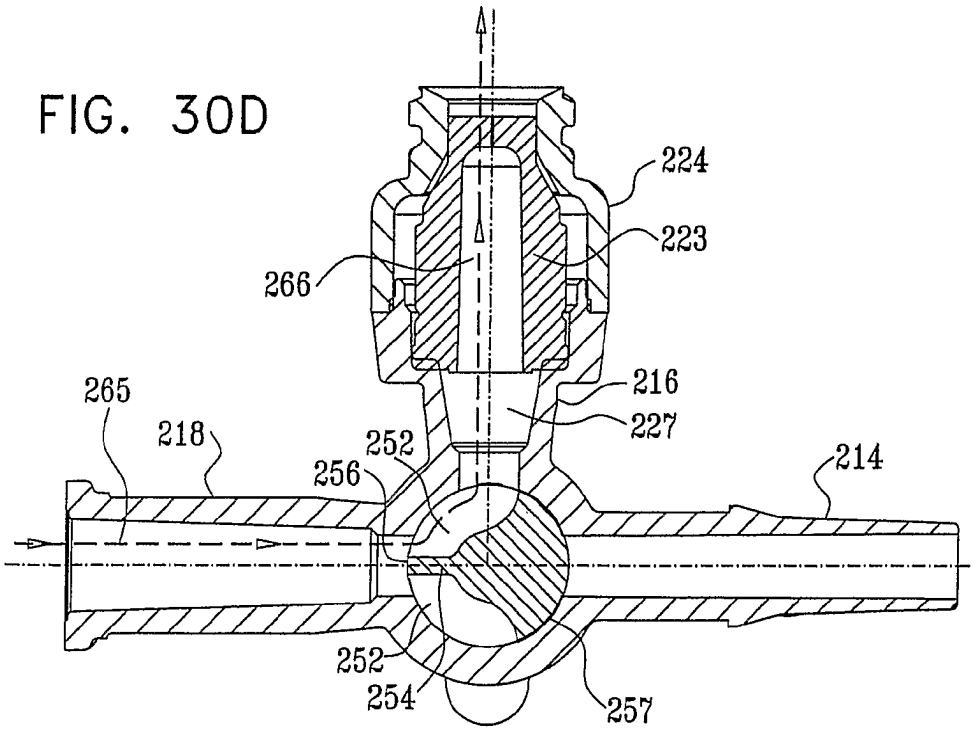

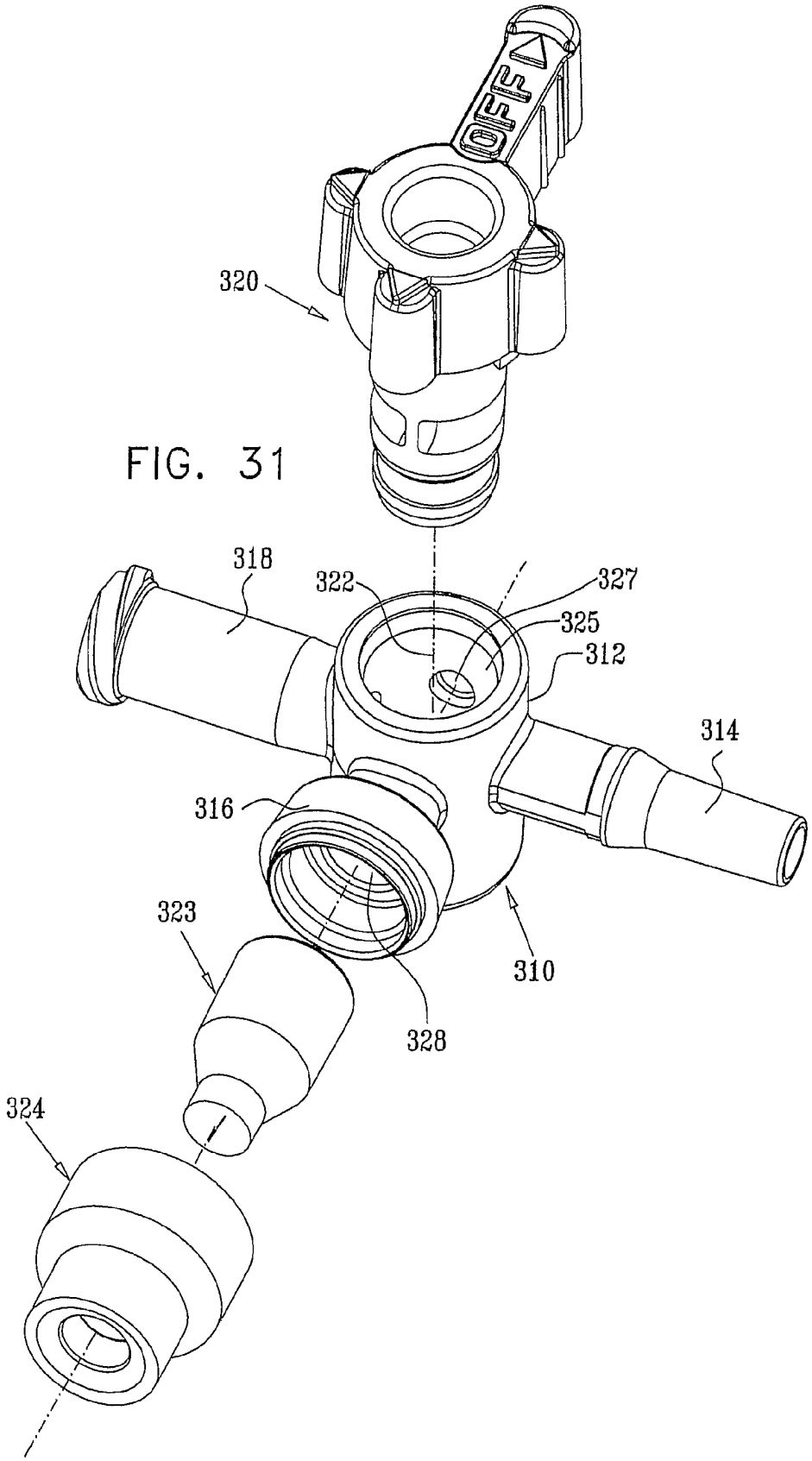


FIG. 31

FIG. 32

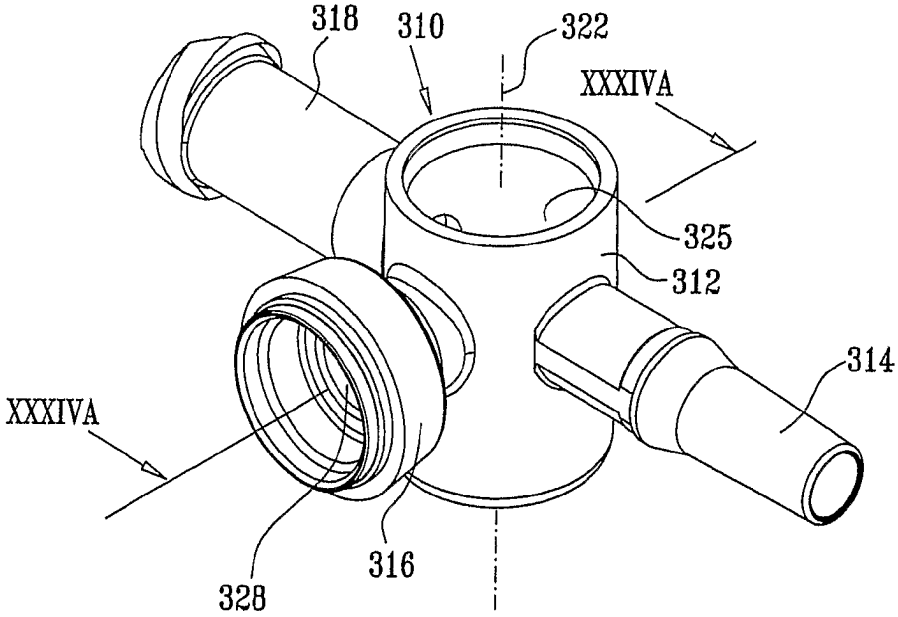
318
310
322
XXXIVA
325
312
314
XXXIVA
316
328

FIG. 33

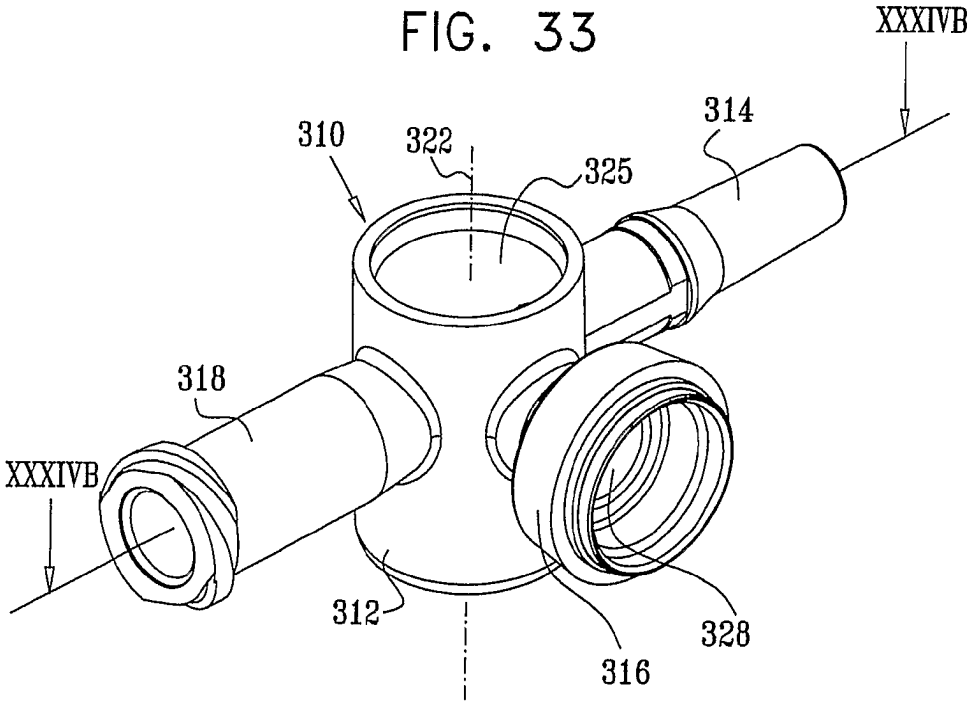
XXXIVB
314
310
322
325
318
XXXIVB
312
328
316

FIG. 34A

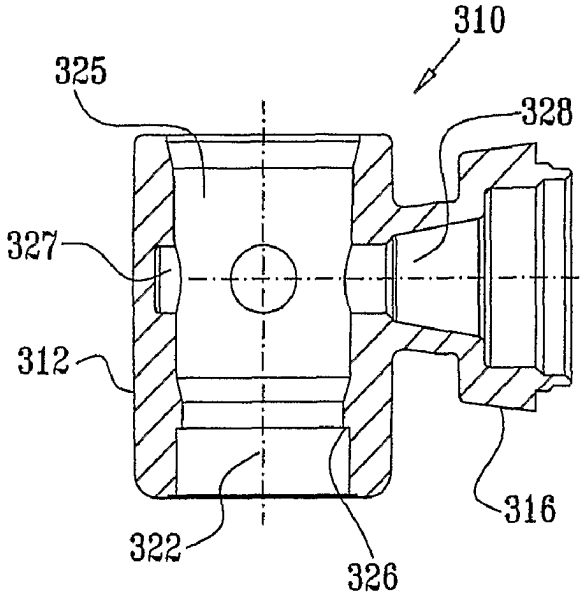


FIG. 34B

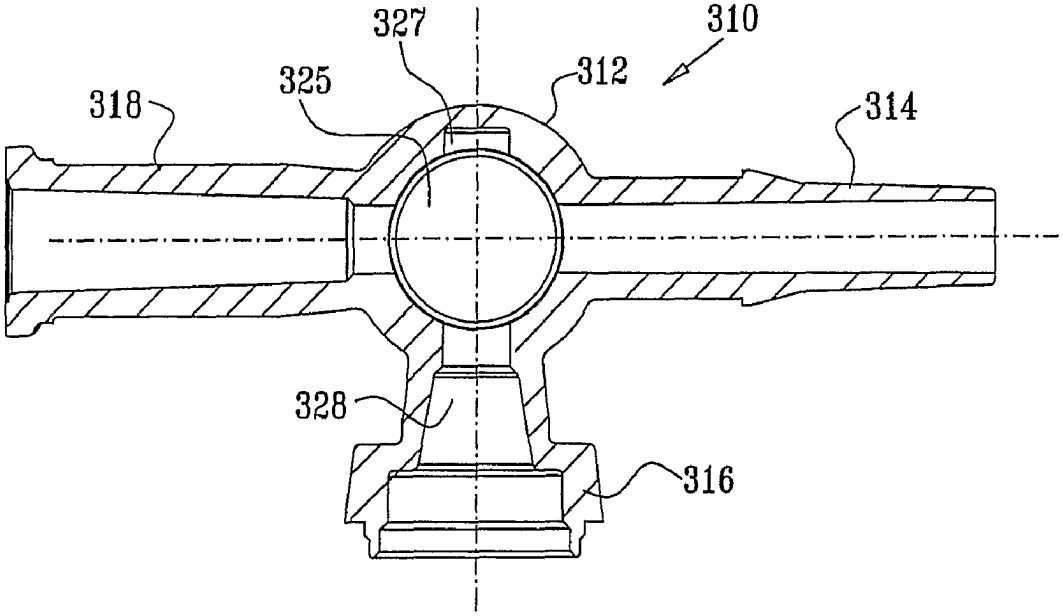

FIG. 35A

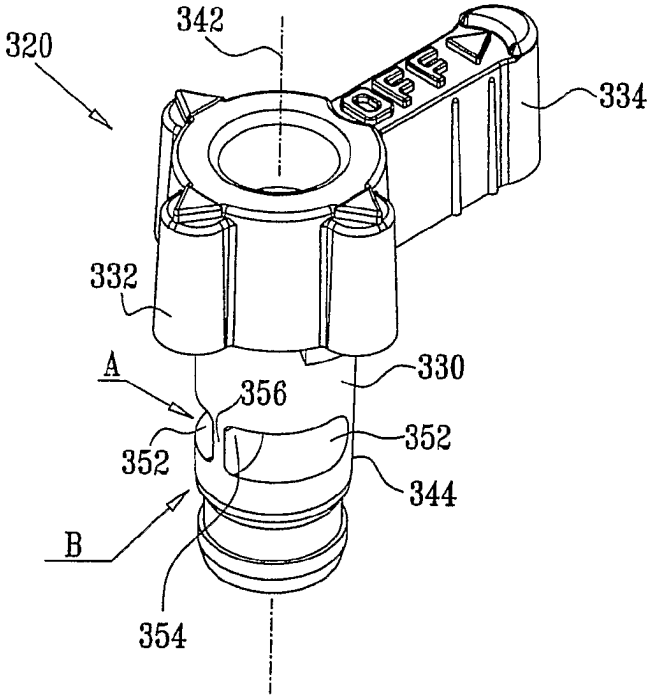


FIG. 35B

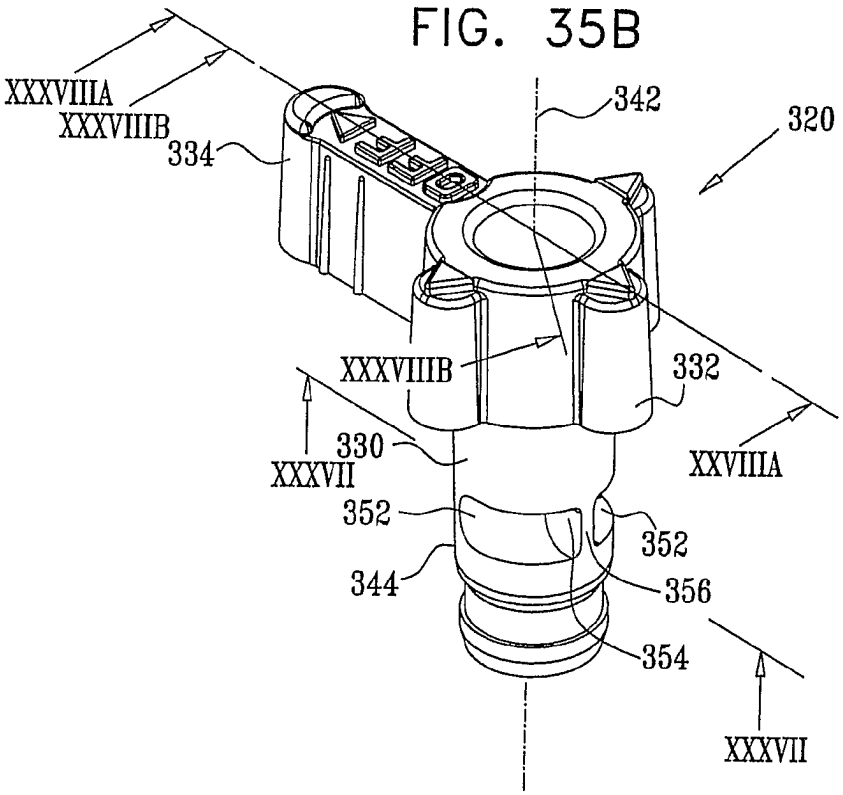

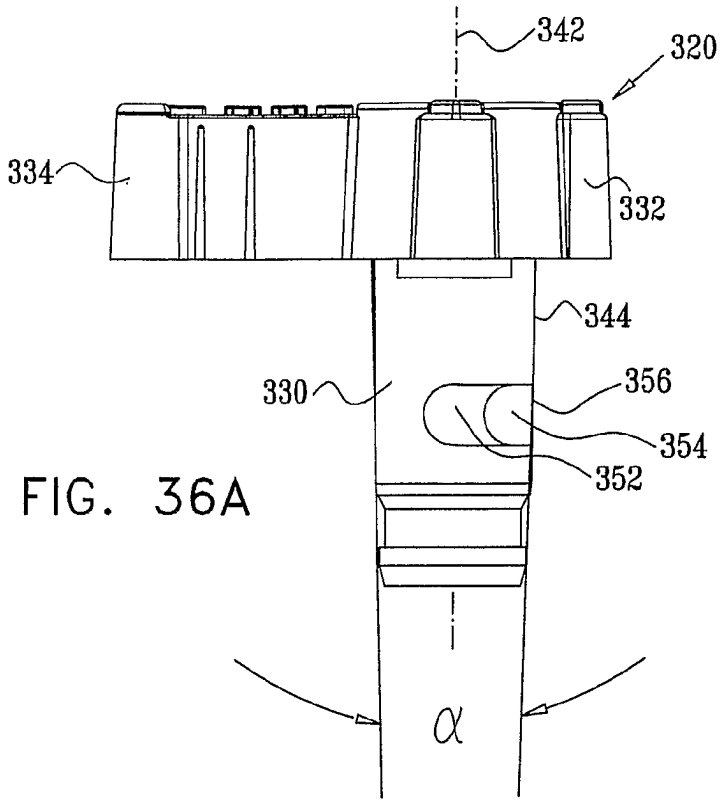


FIG. 36A

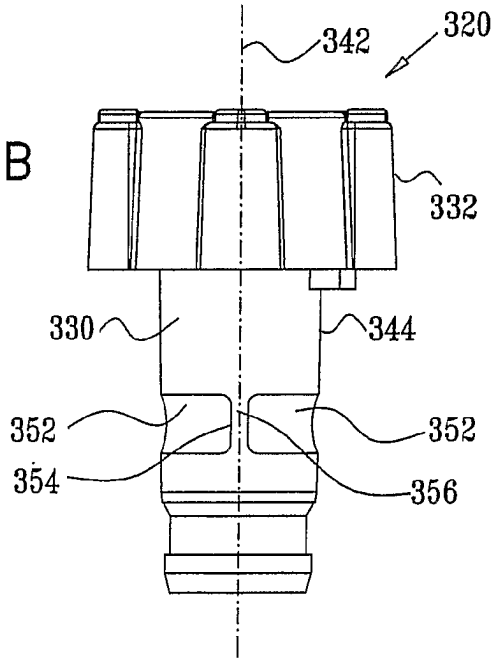


FIG. 36B

FIG. 37

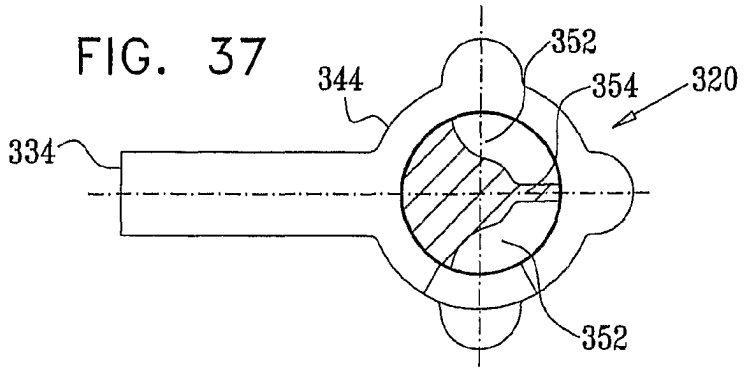


FIG. 38A

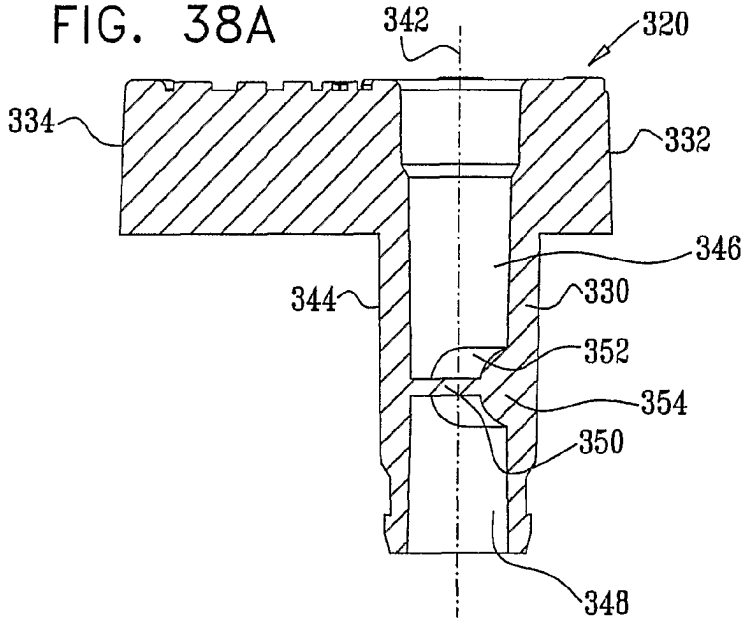


FIG. 38B

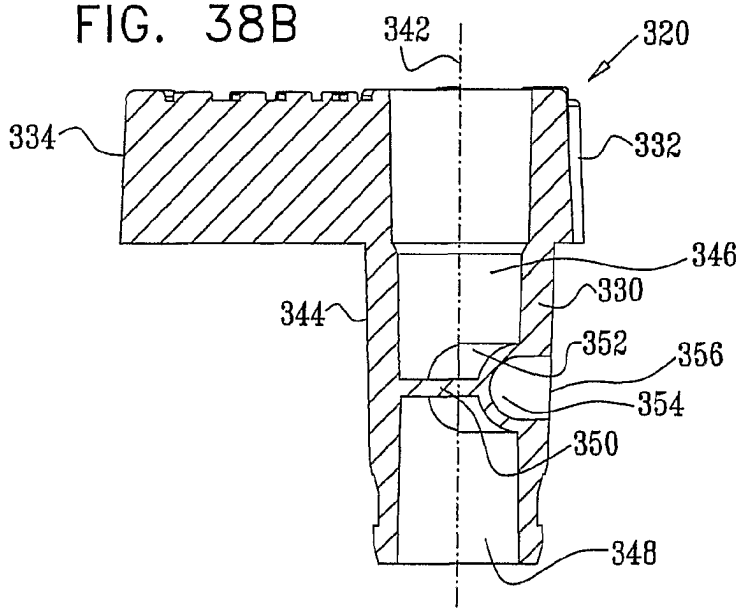

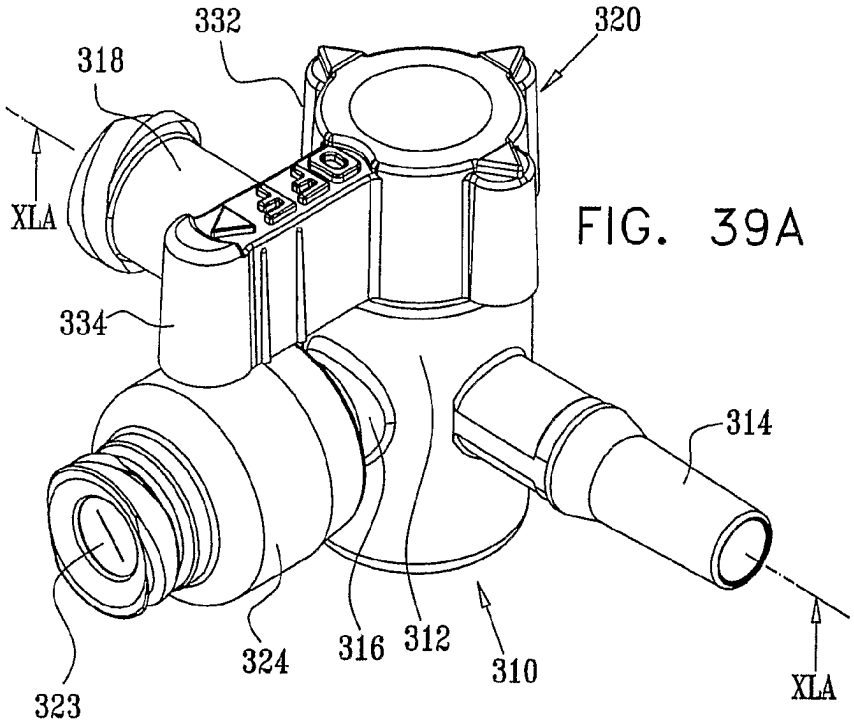


FIG. 39A

FIG. 39B

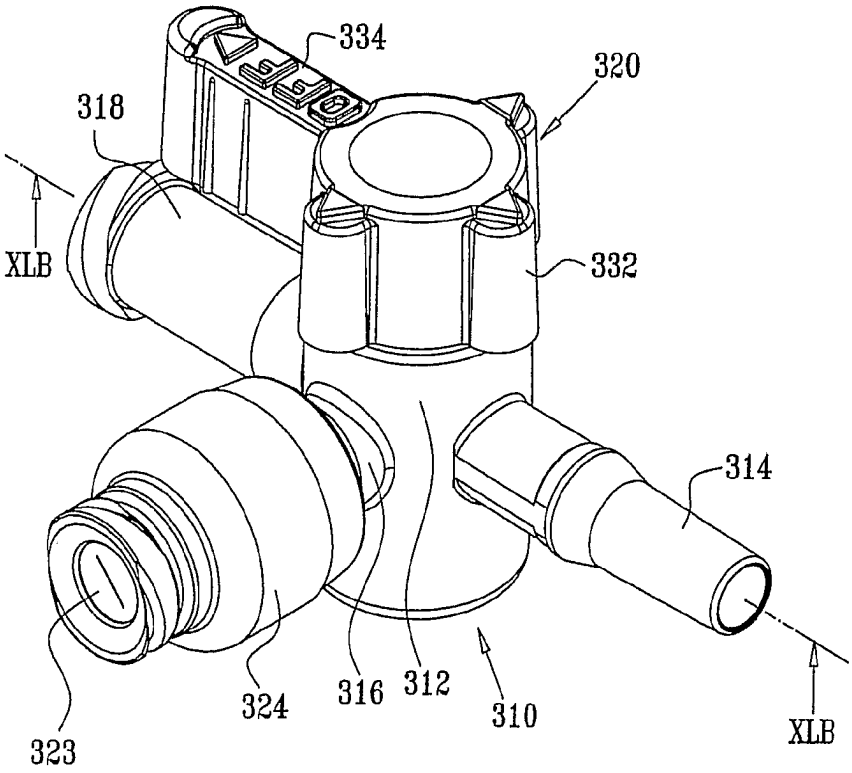

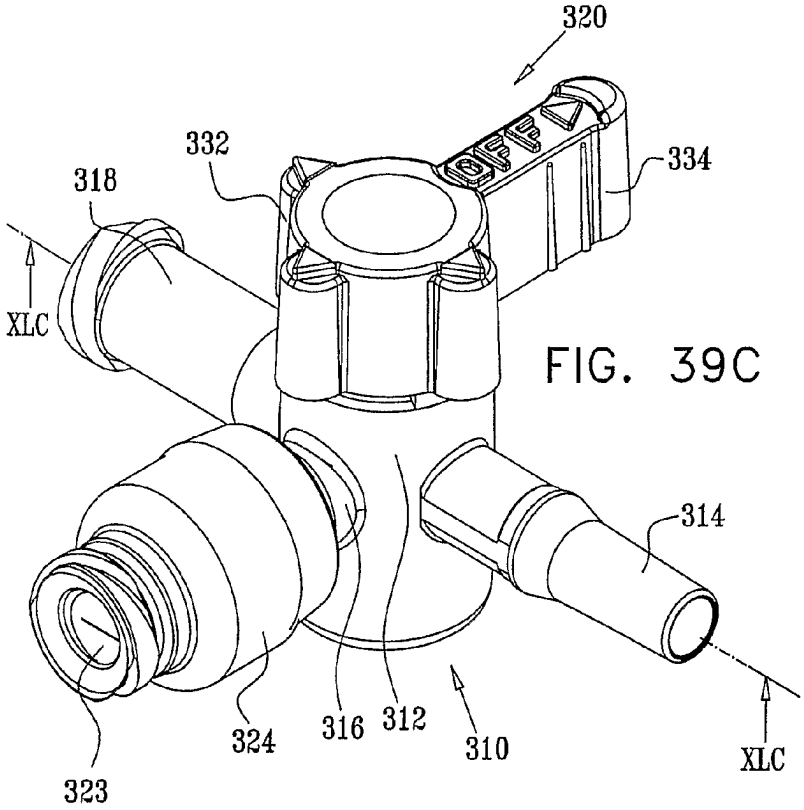


FIG. 39C

FIG. 39D

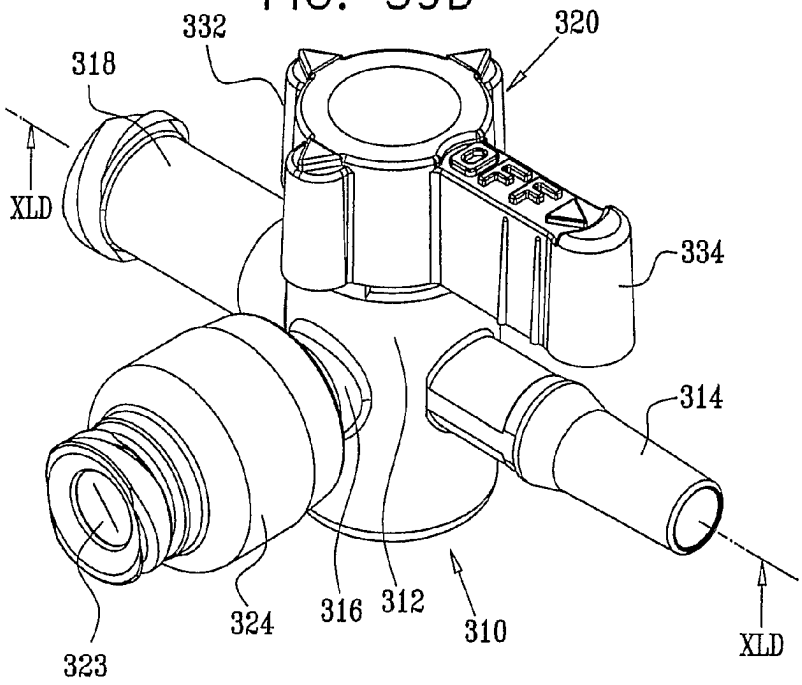

FIG. 40A

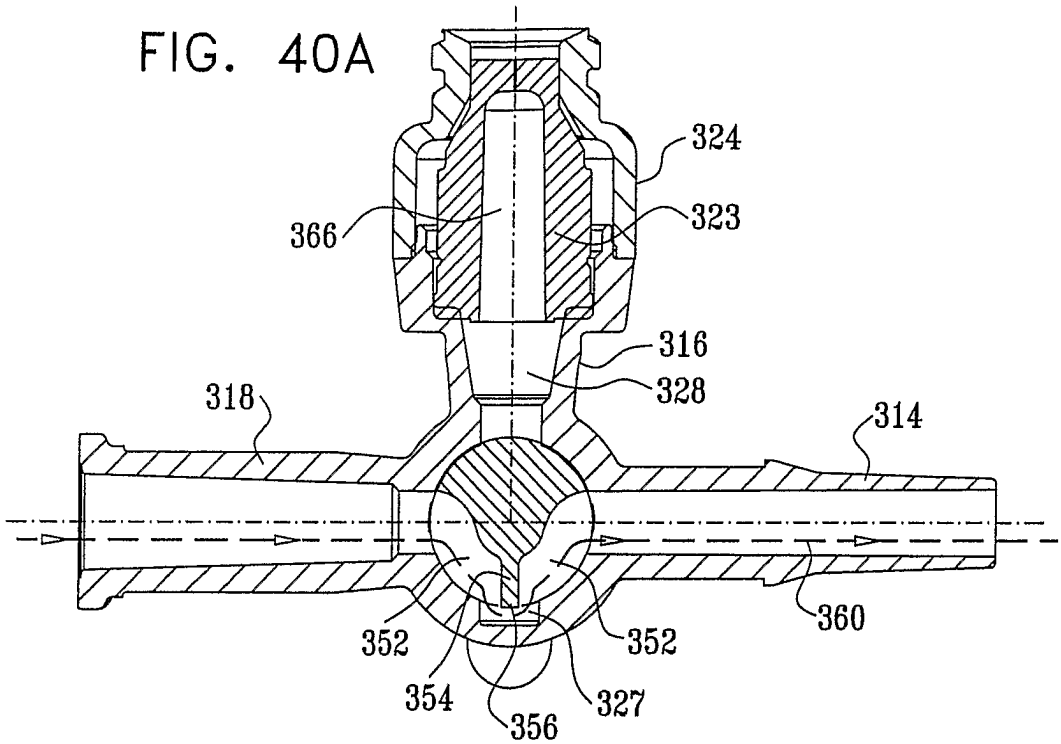


FIG. 40B

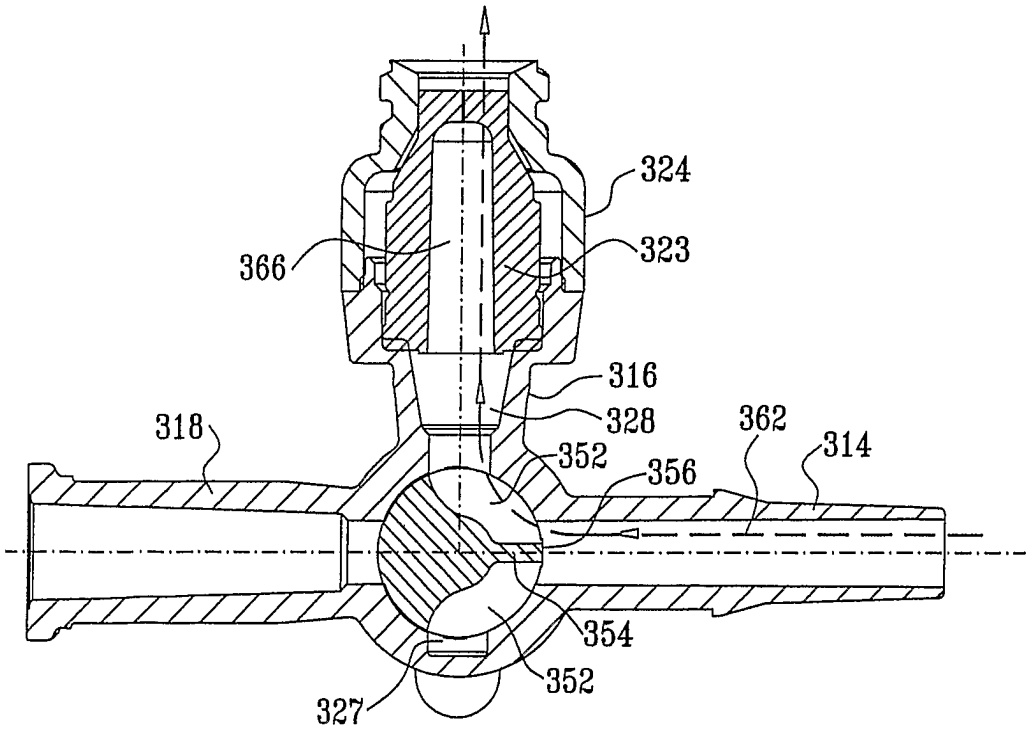

FIG. 40C

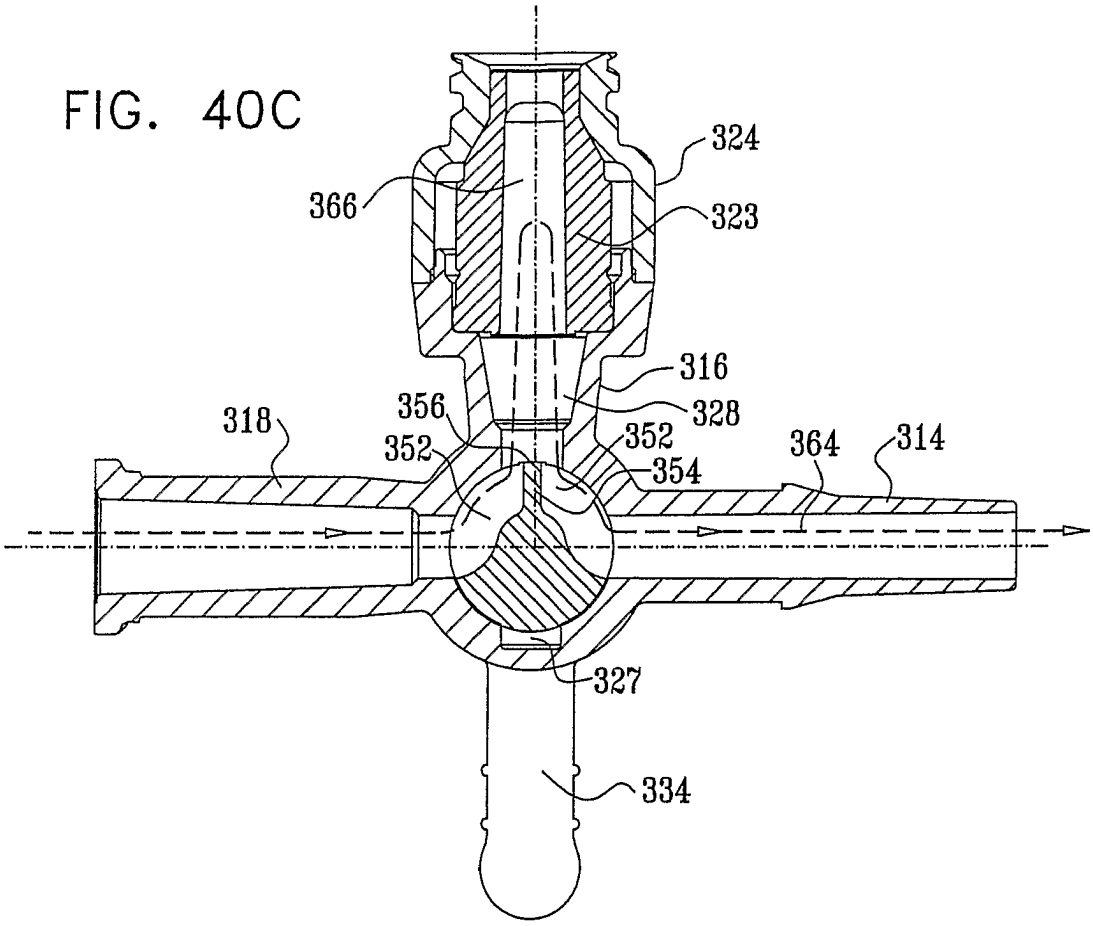


FIG. 40D

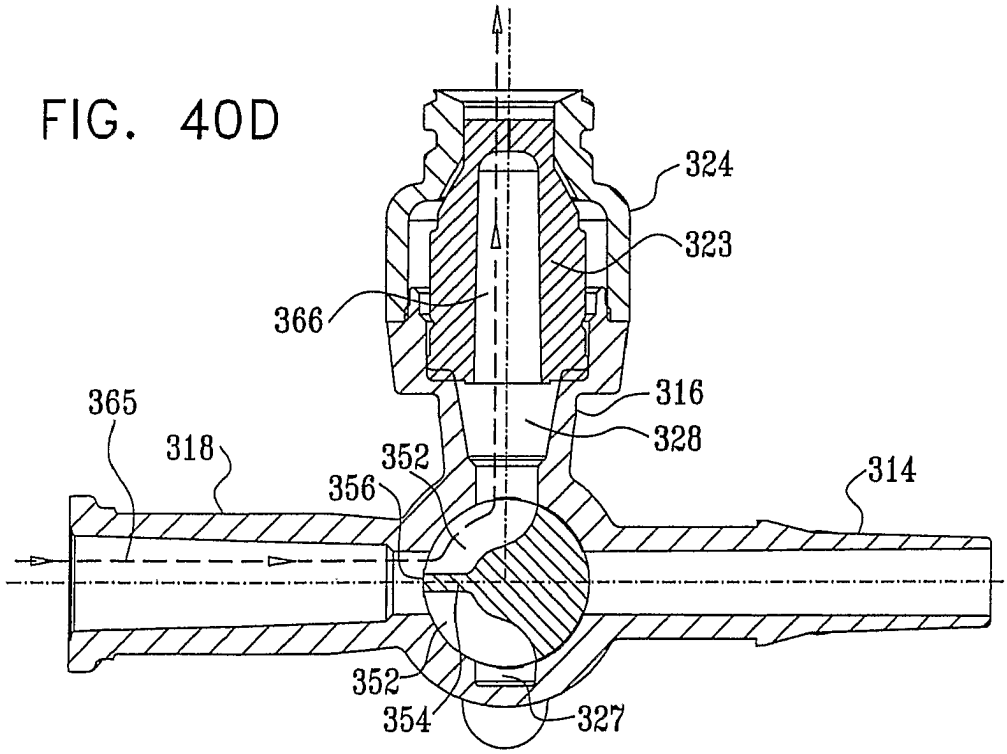

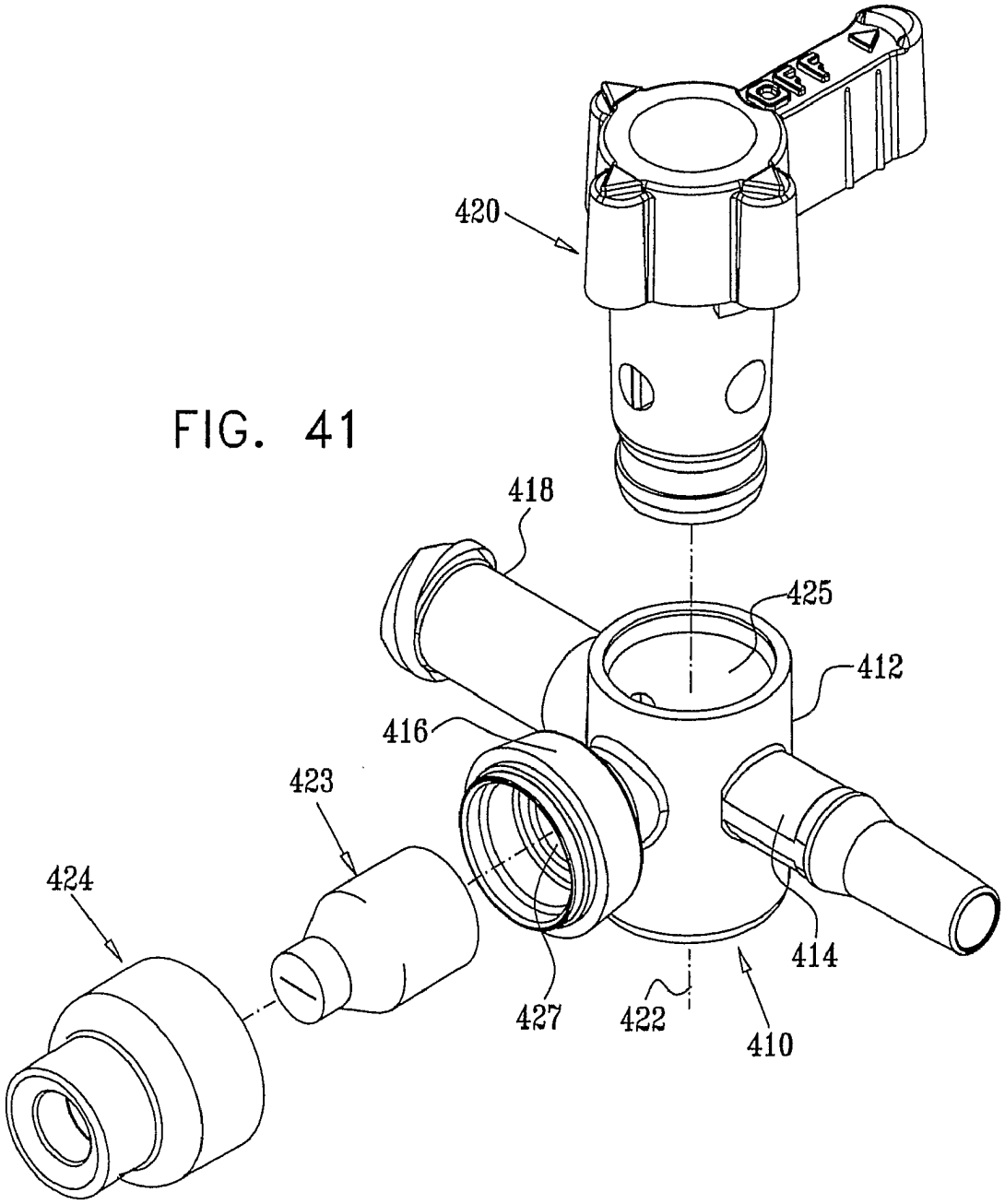


FIG. 41

FIG. 42

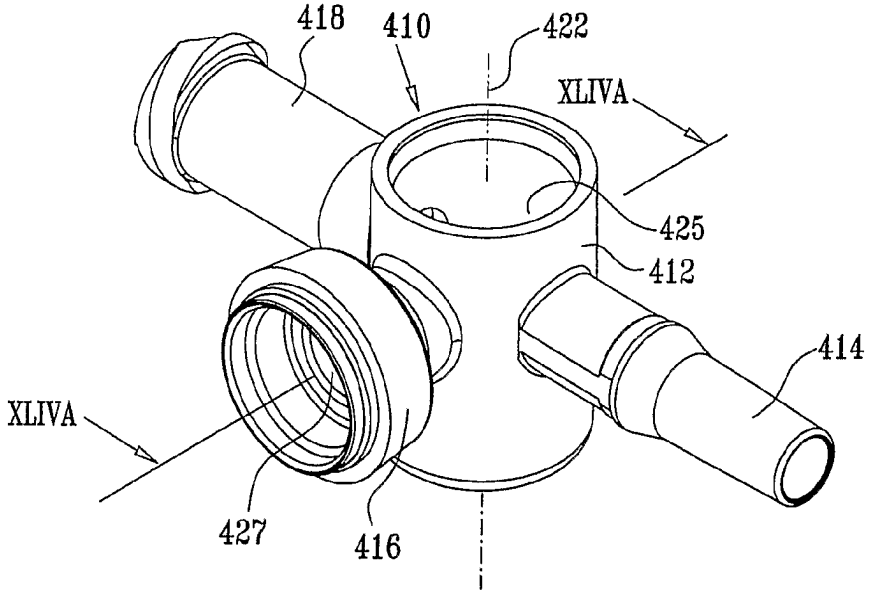
418
410
422
XLIVA
425
412
414
XLIVA
427
416

FIG. 43

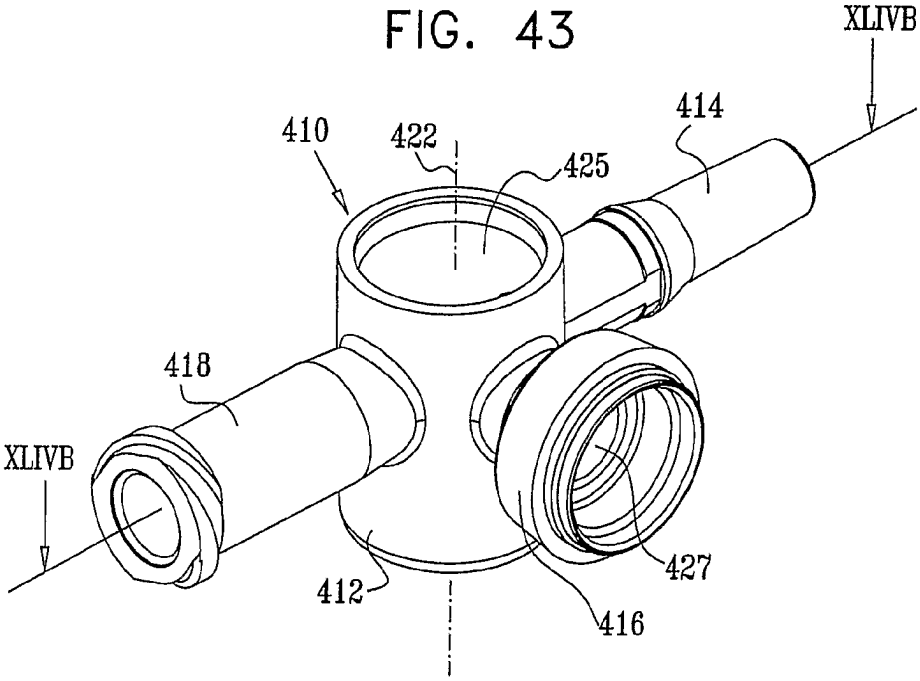
XLIVB
414
410
422
425
418
XLIVB
427
412
416

FIG. 44A

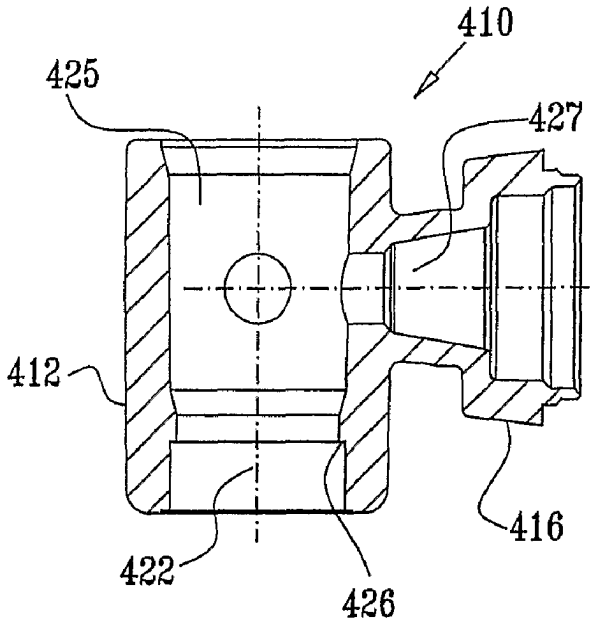


FIG. 44B

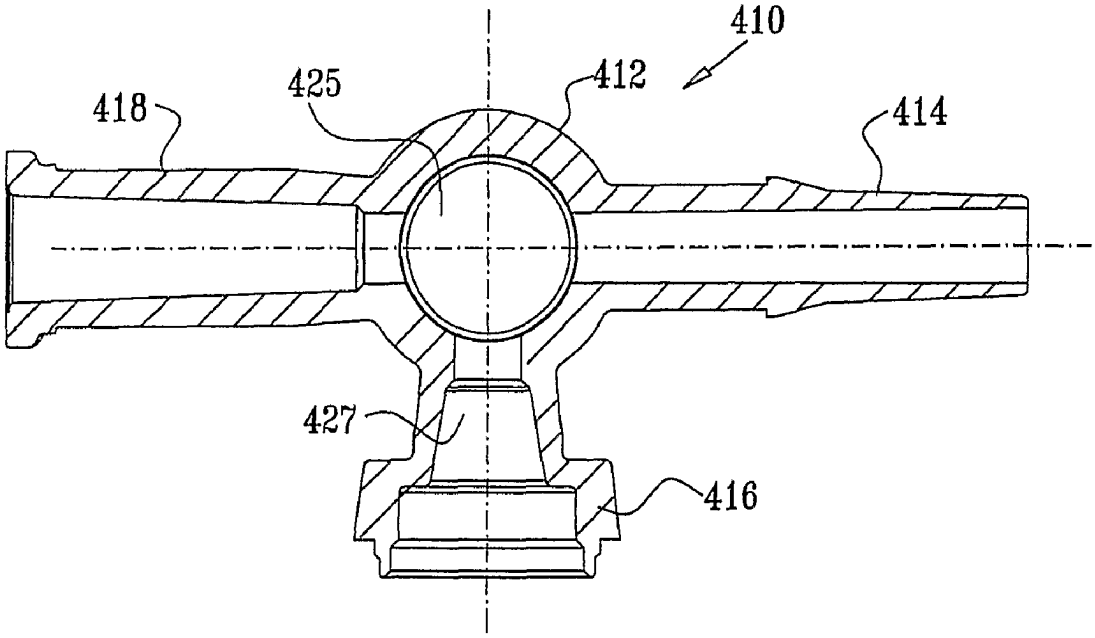

FIG. 45A

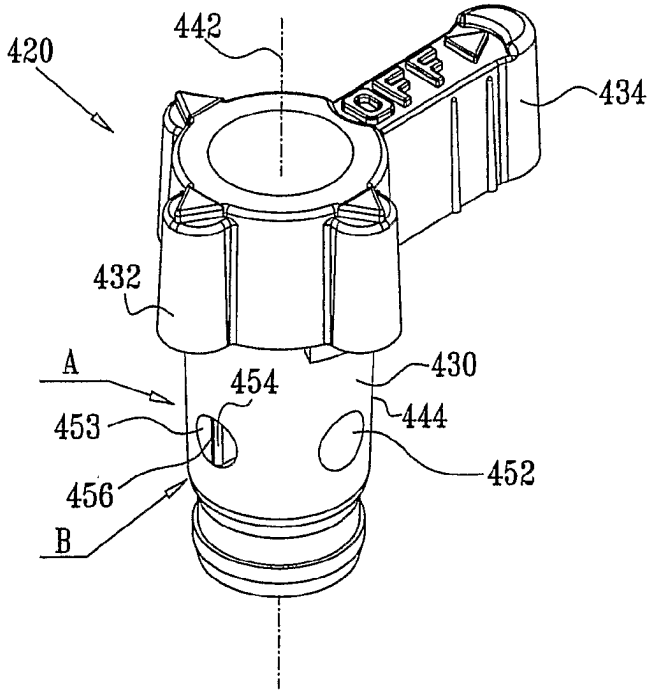


FIG. 45B

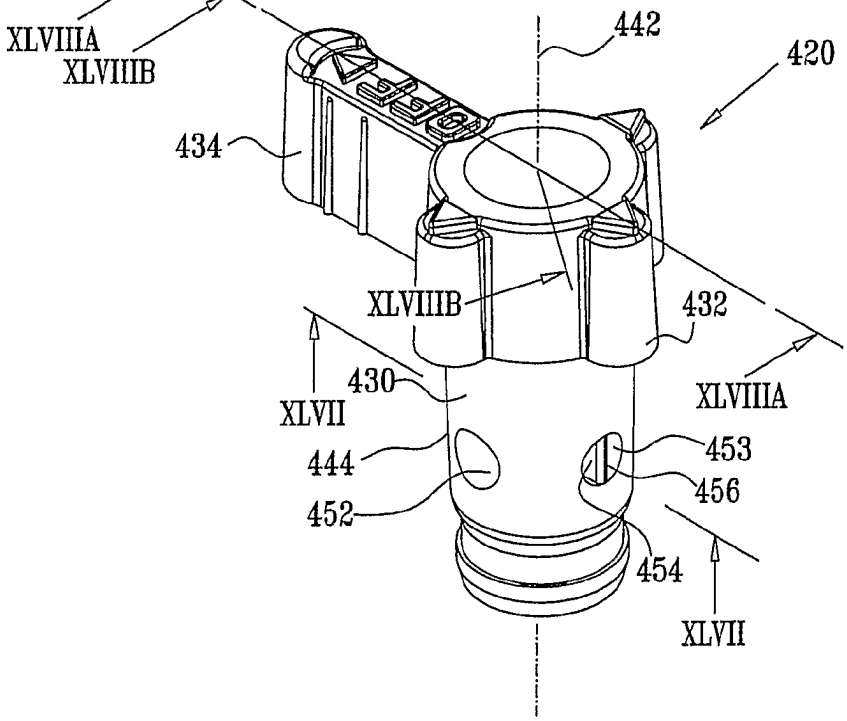

FIG. 46A

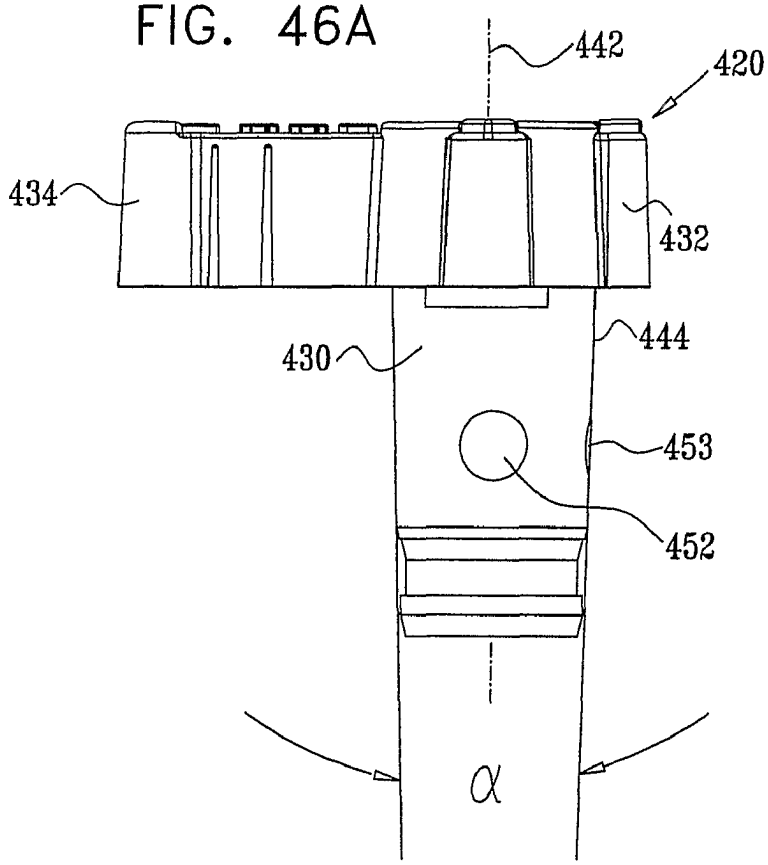


FIG. 46B

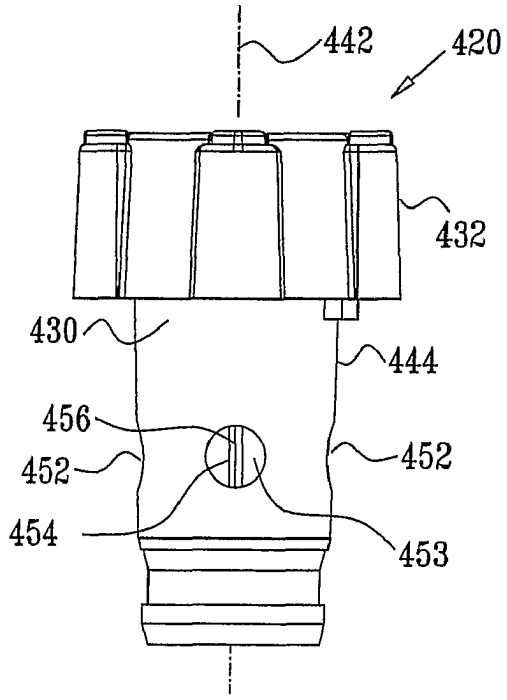

FIG. 47

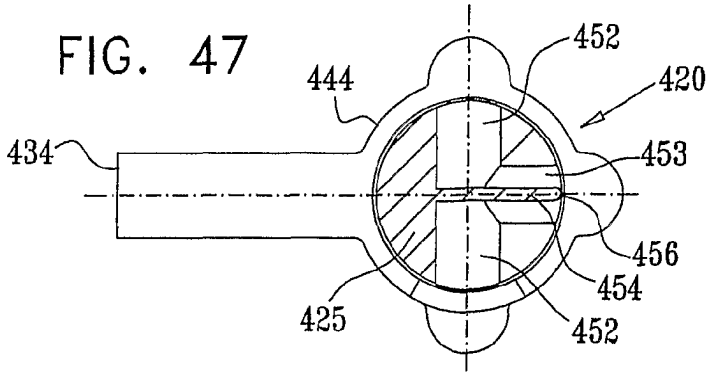


FIG. 48A

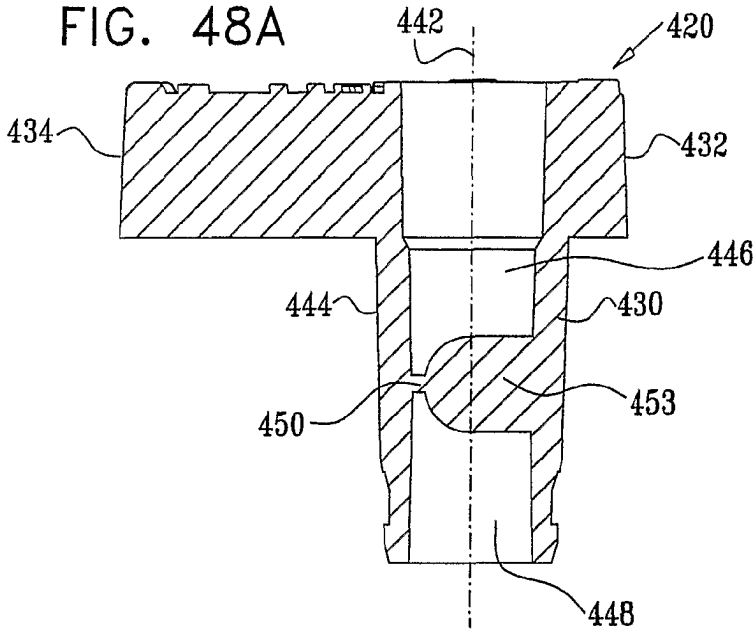


FIG. 48B

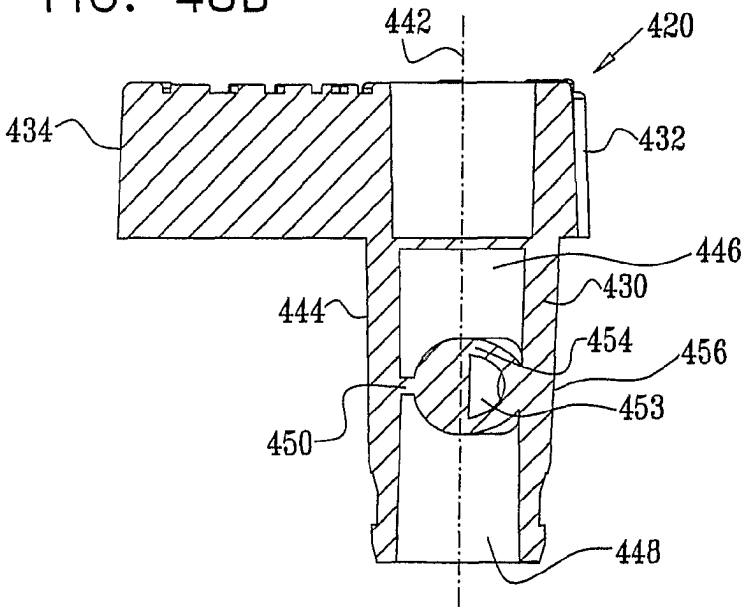

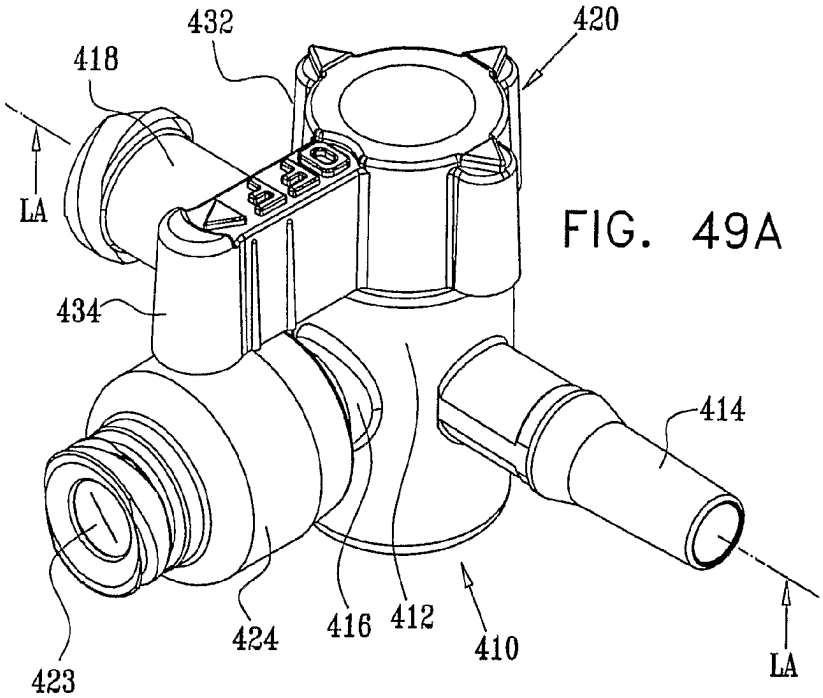


FIG. 49A

FIG. 49B

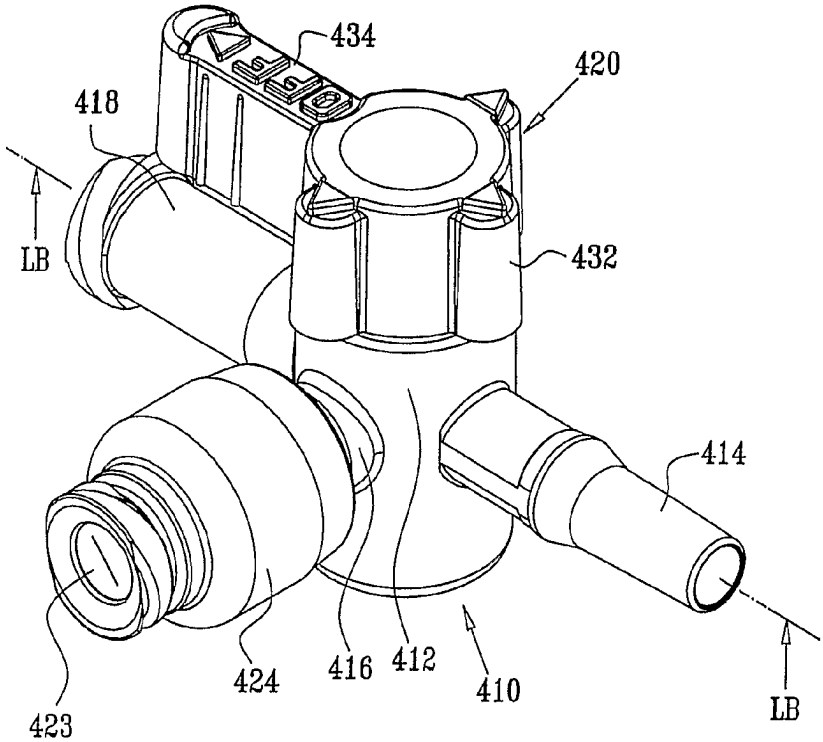

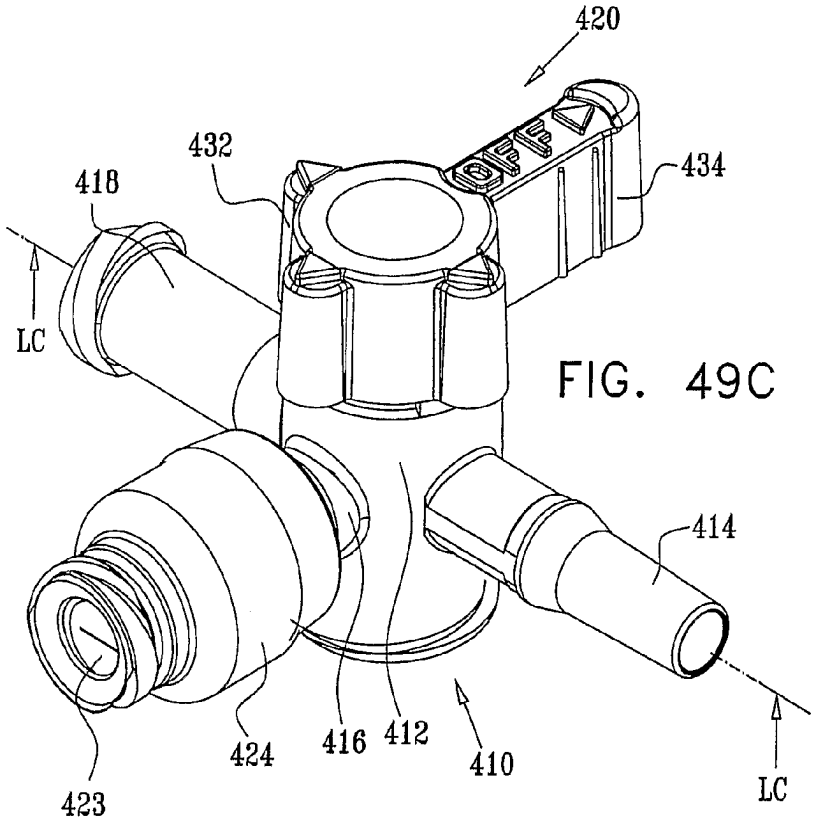


FIG. 49C

FIG. 49D

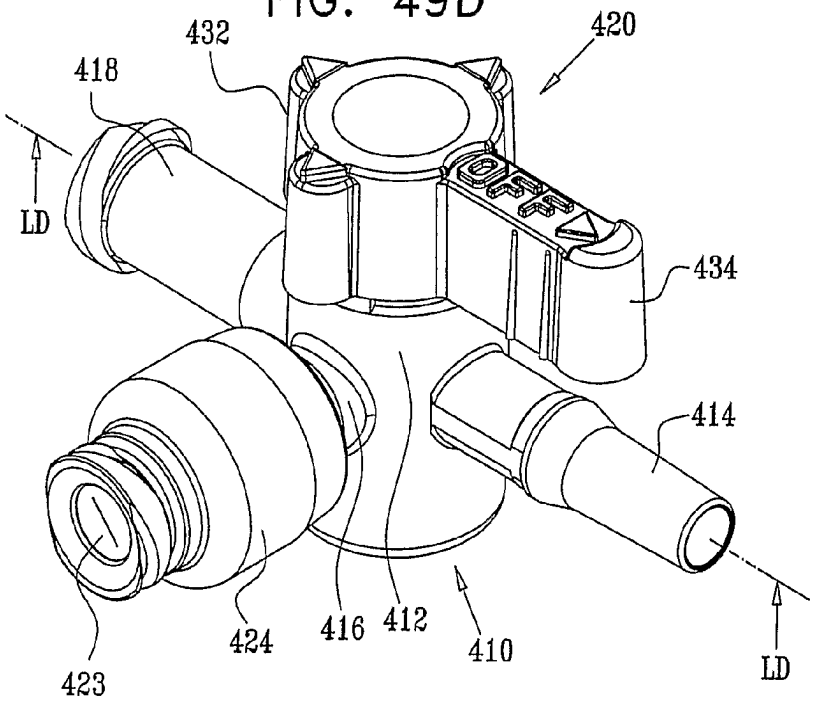

FIG. 50A

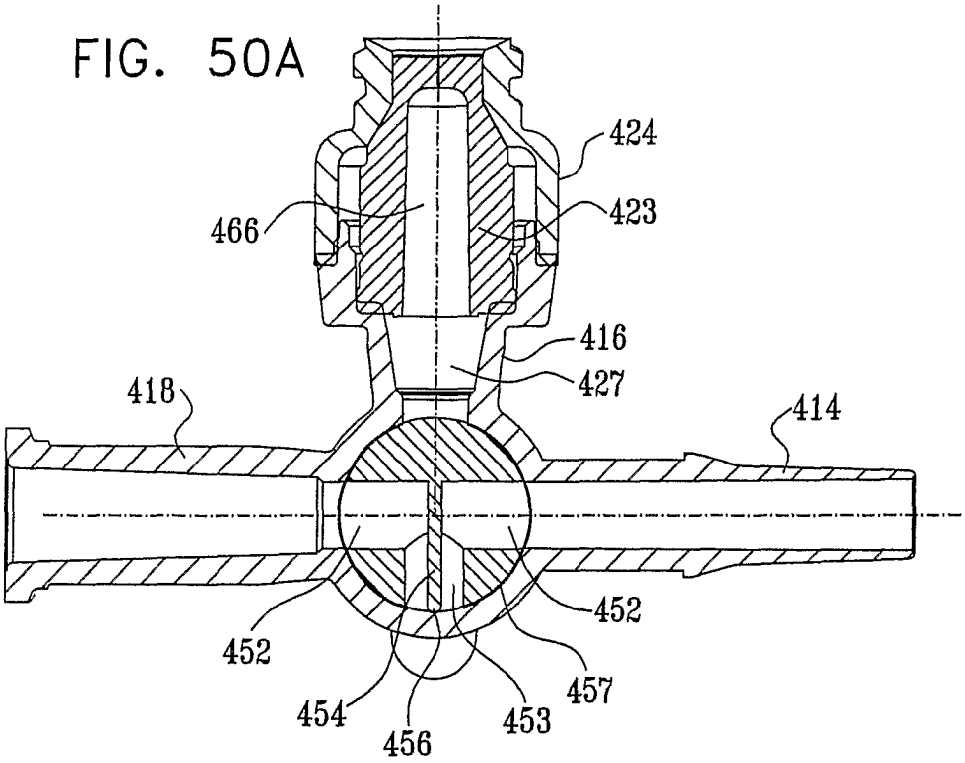


FIG. 50B

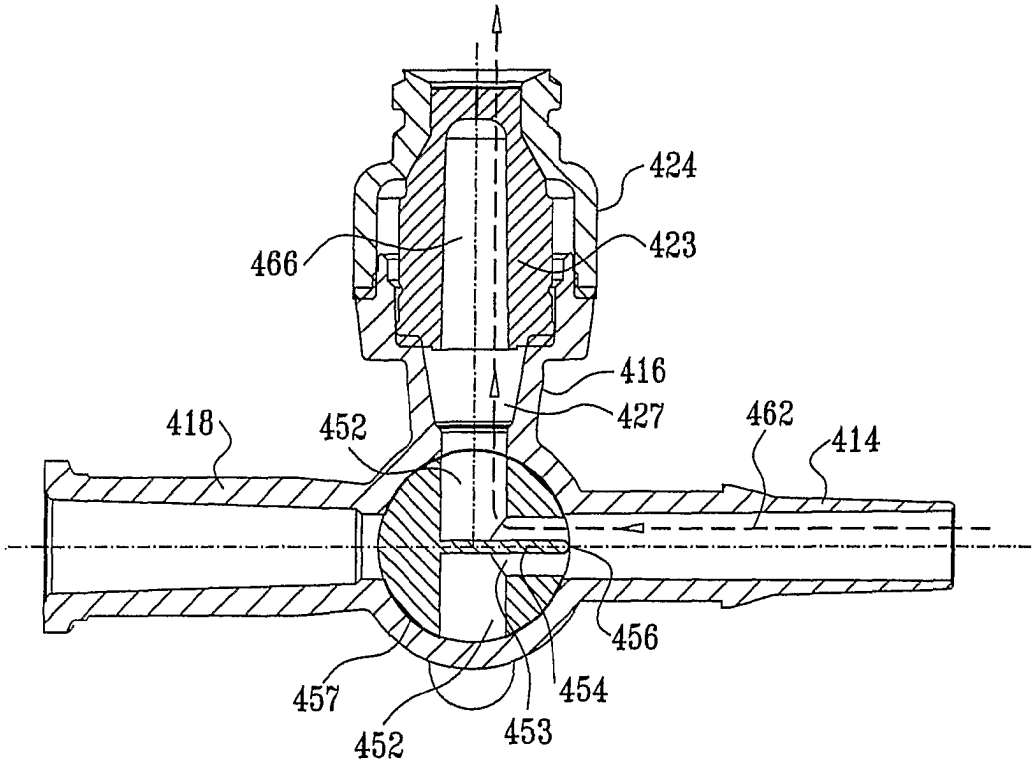

FIG. 50C

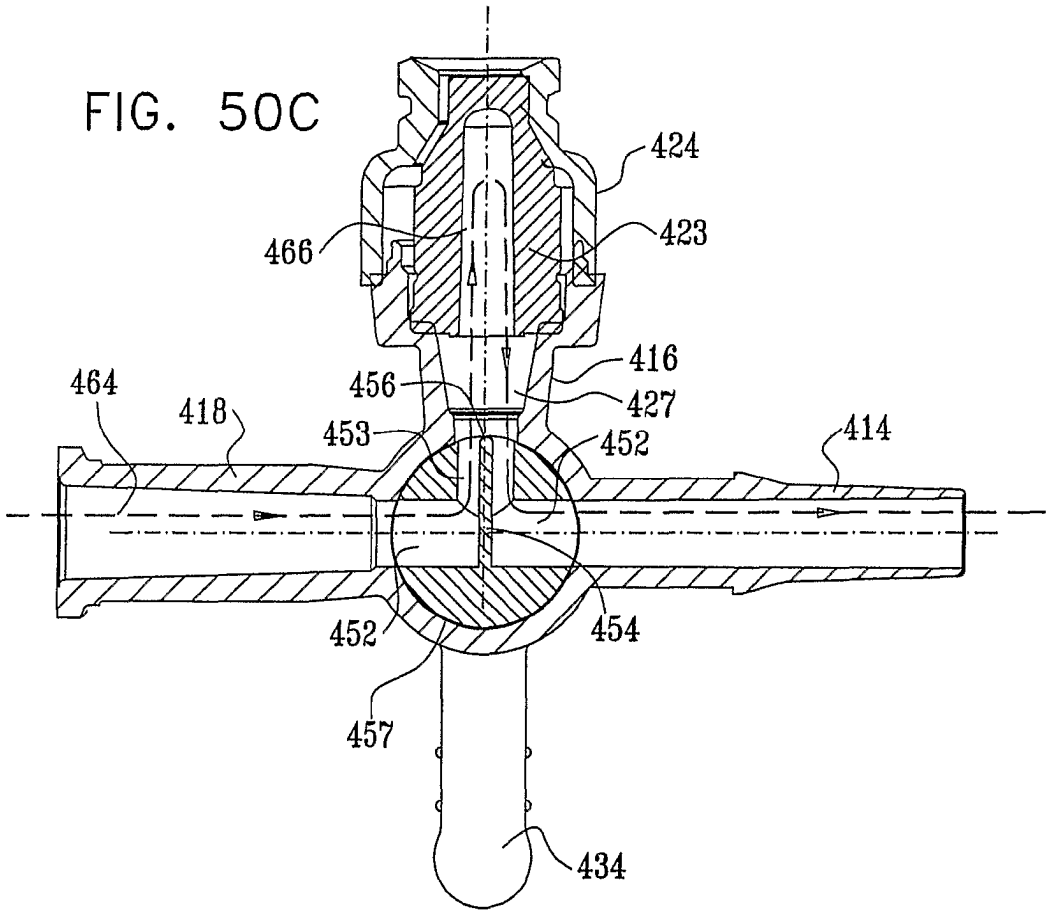


FIG. 50D

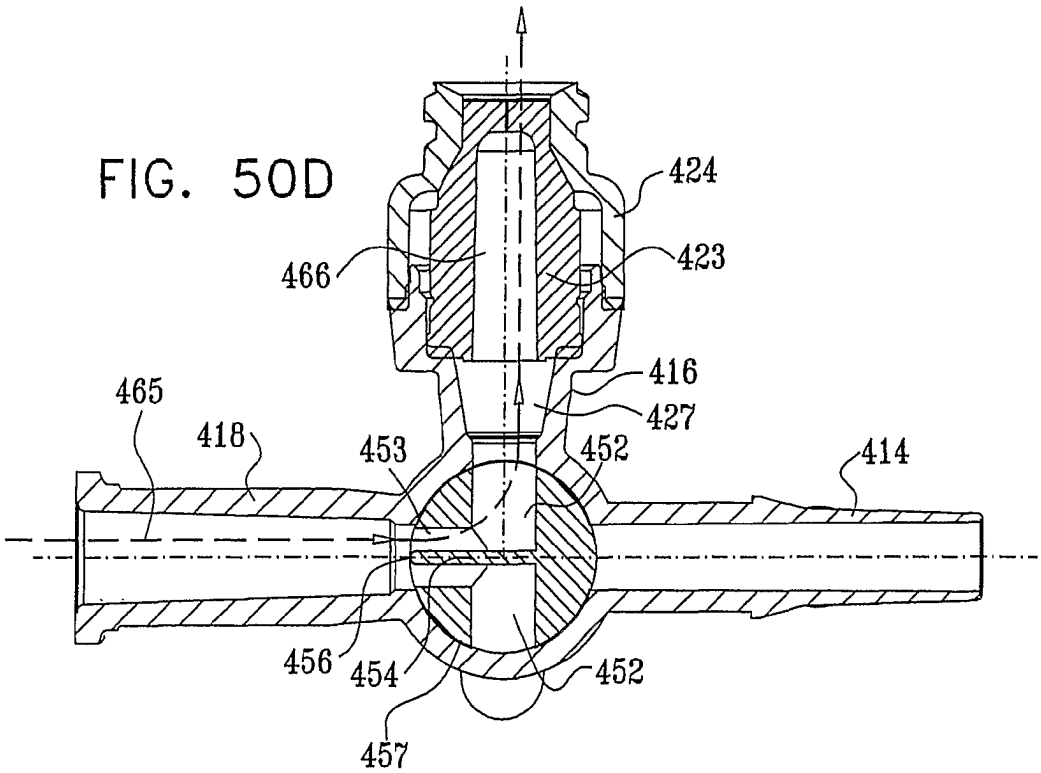

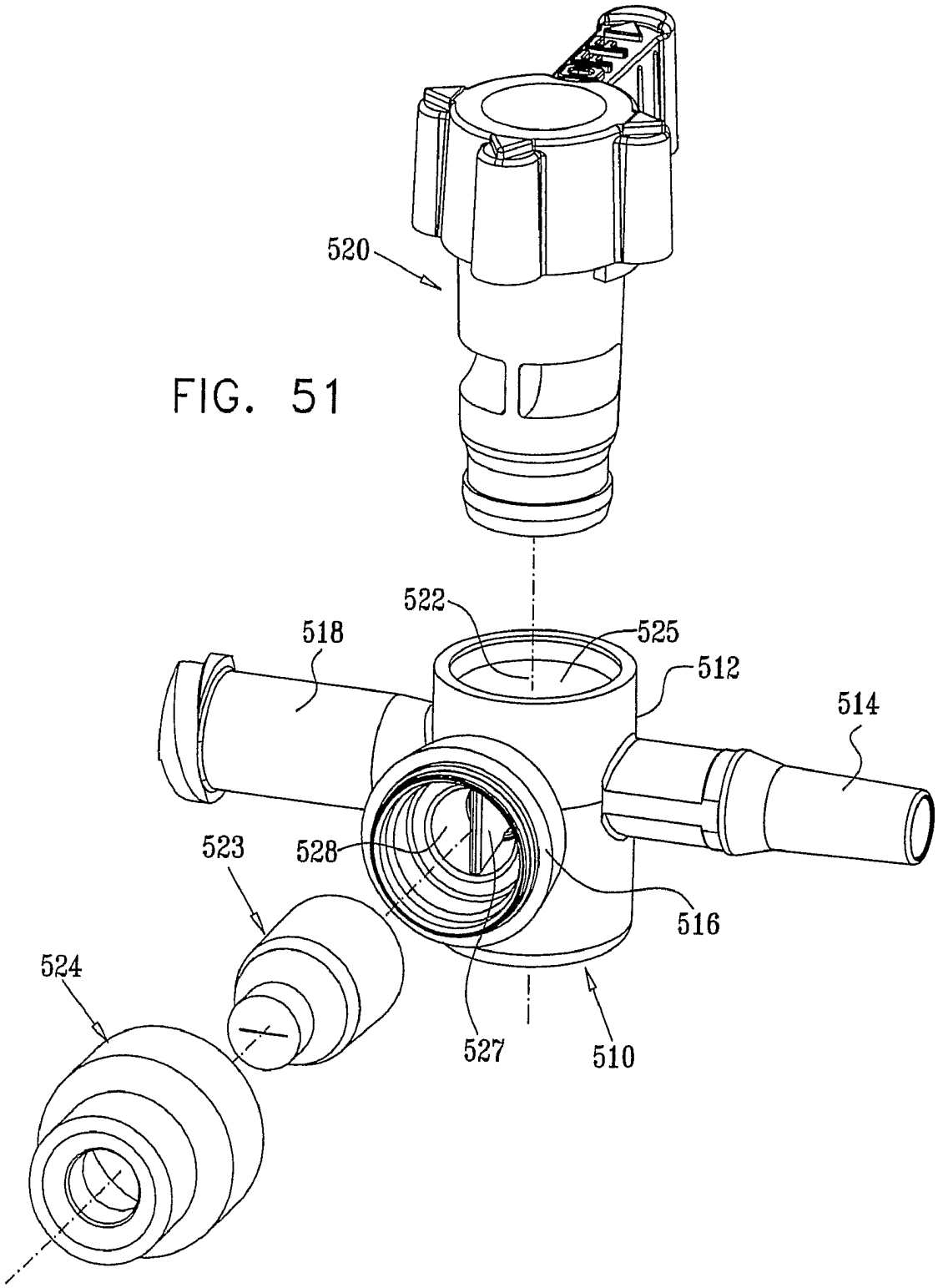


FIG. 51

FIG. 52

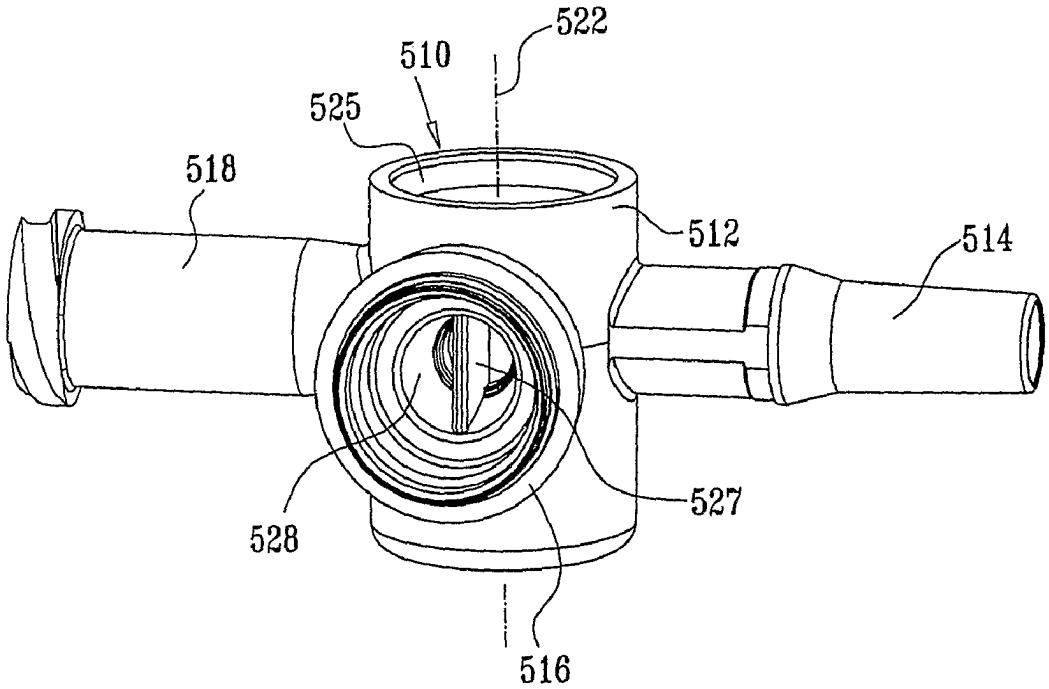
522
510
525
518
512
514
527
528
516

FIG. 53

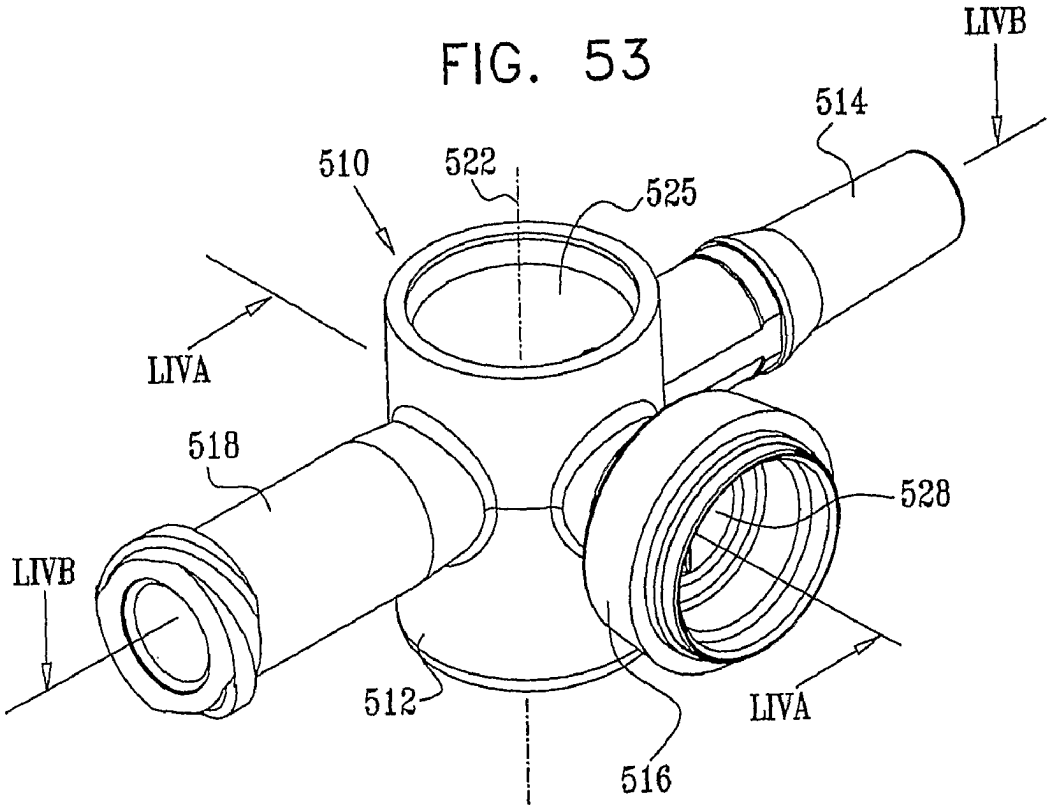
LIVB
514
510
522
525
LIVA
518
528
LIVB
512
LIVA
516

FIG. 54A

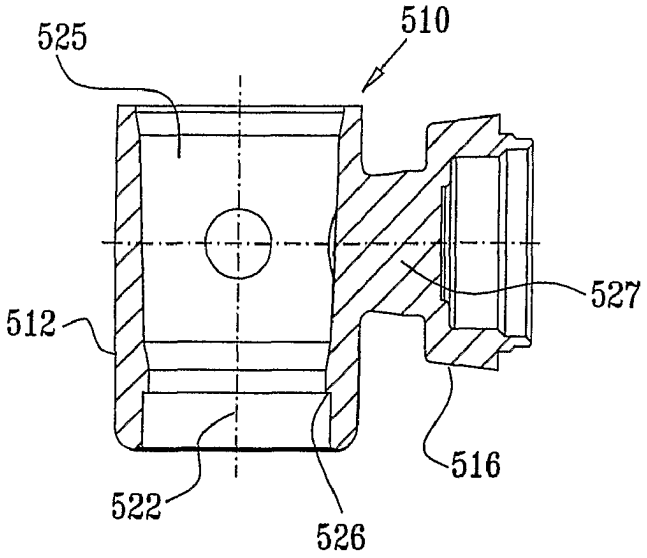


FIG. 54B

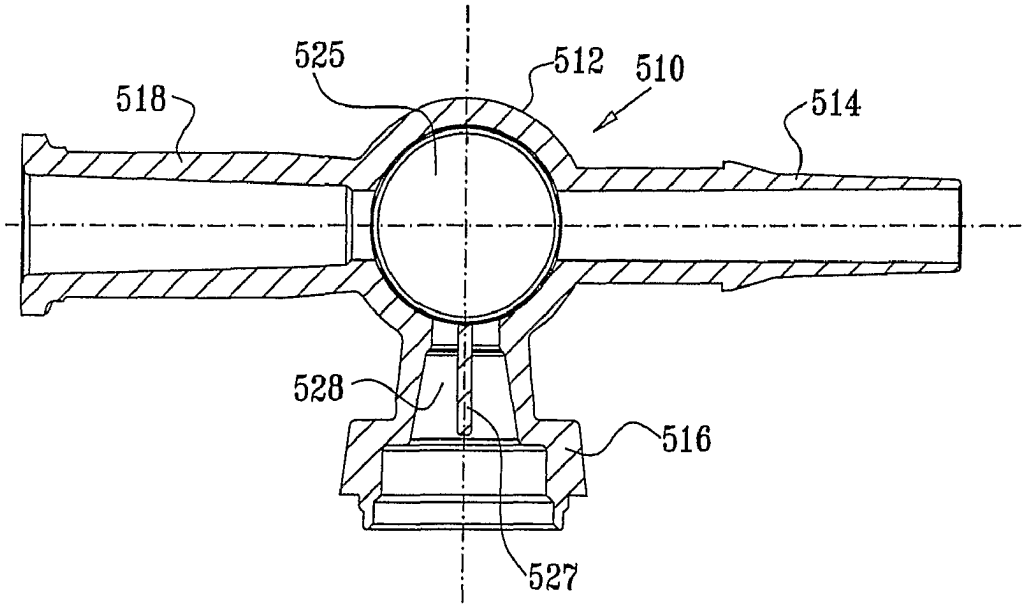

FIG. 55A

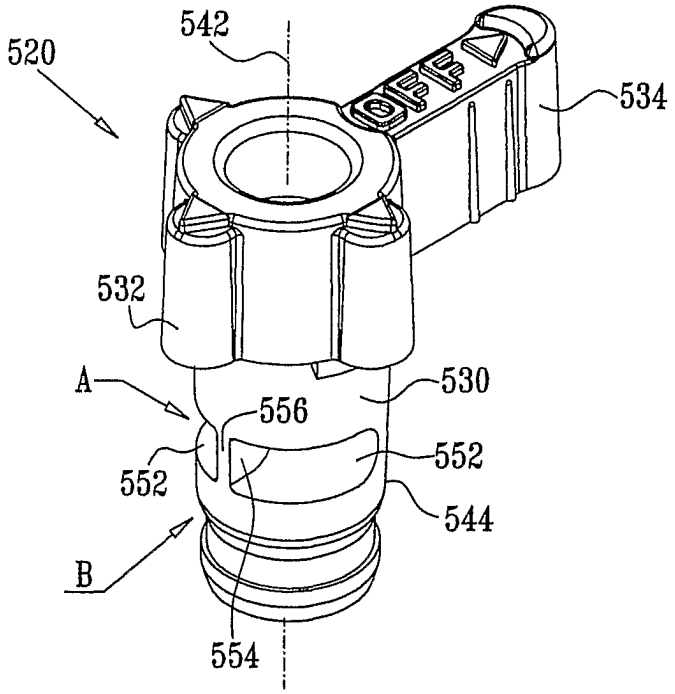


FIG. 55B

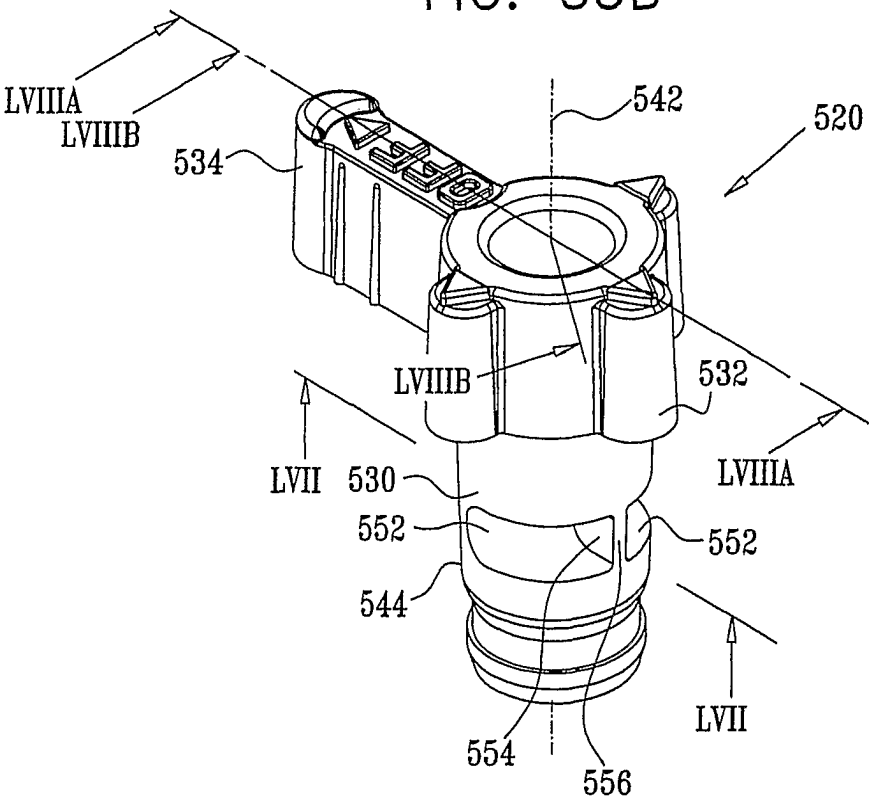

FIG. 56A

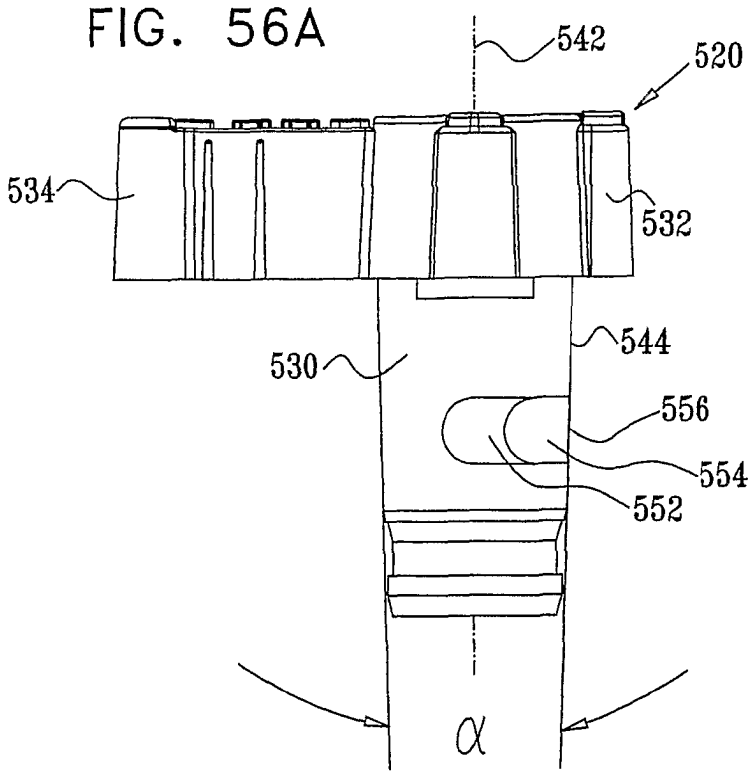


FIG. 56B

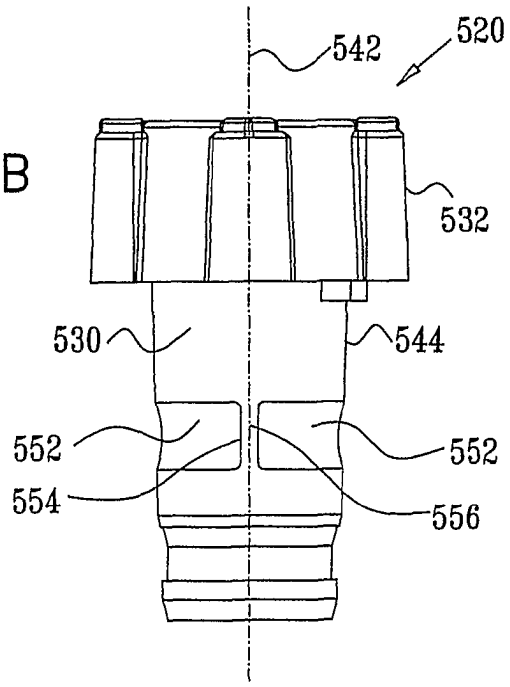

FIG. 57

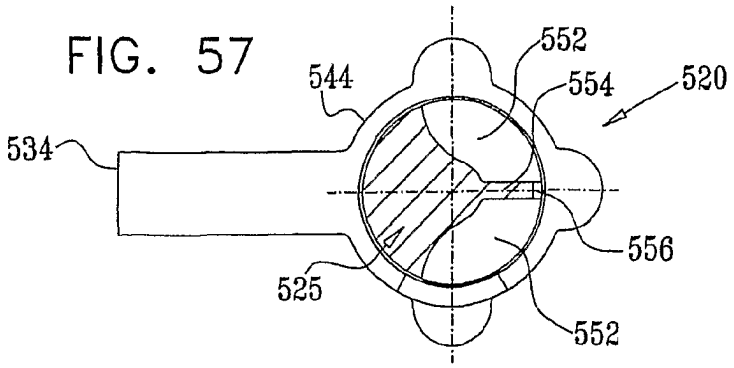


FIG. 58A

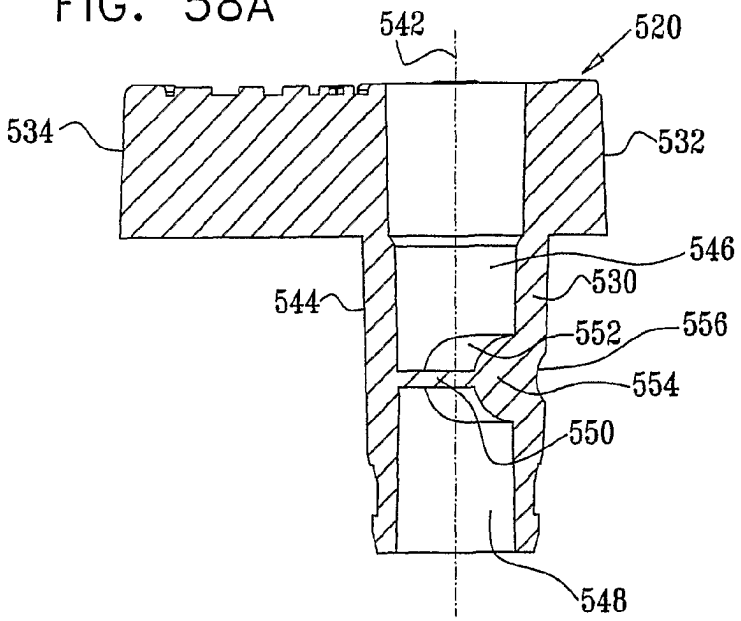


FIG. 58B

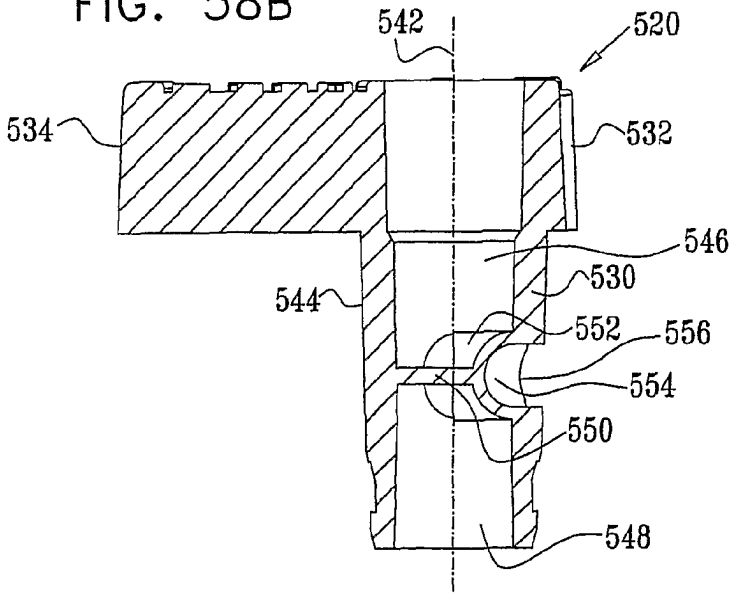

FIG. 59A

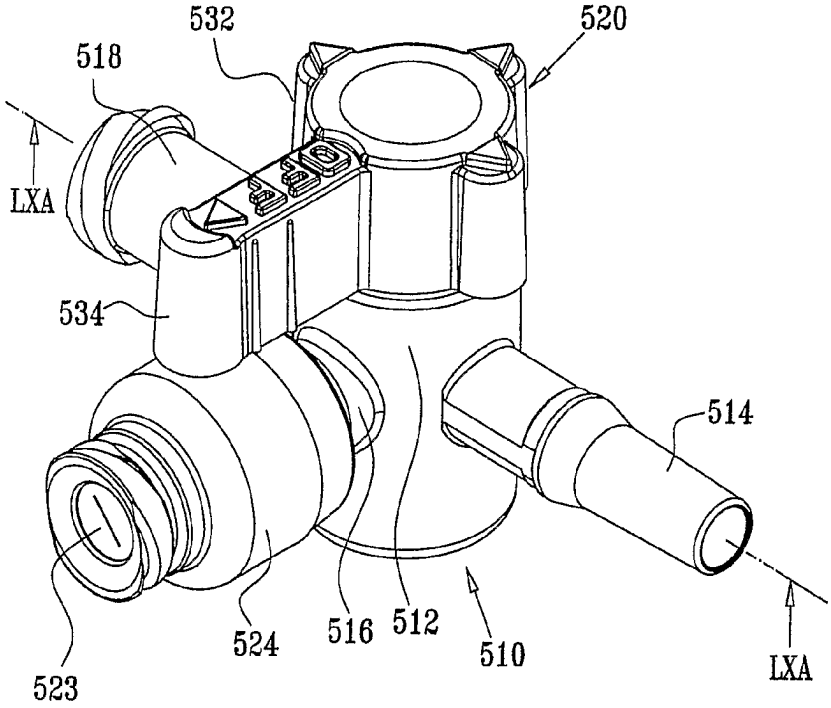


FIG. 59B

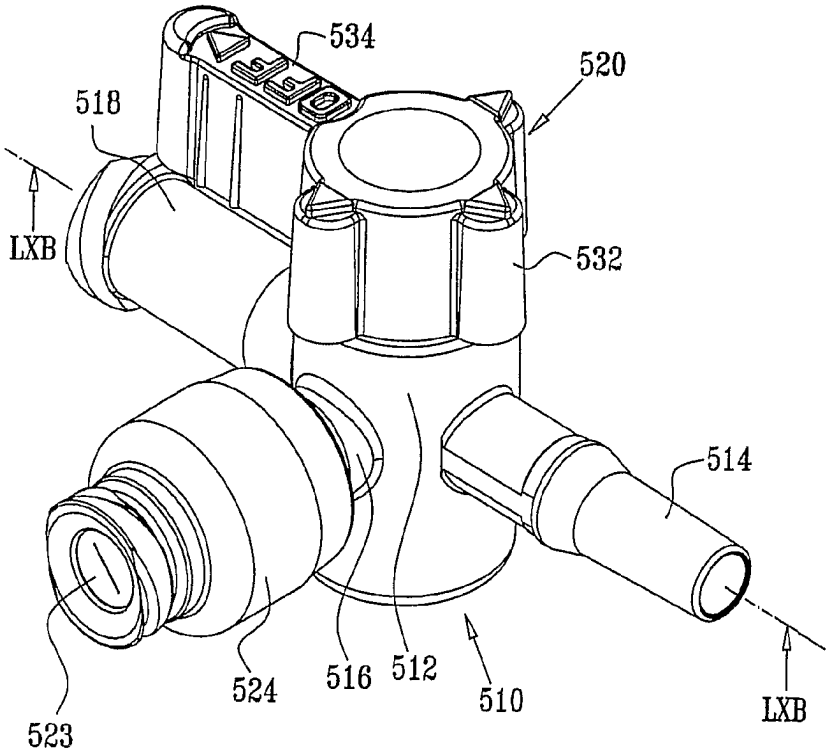

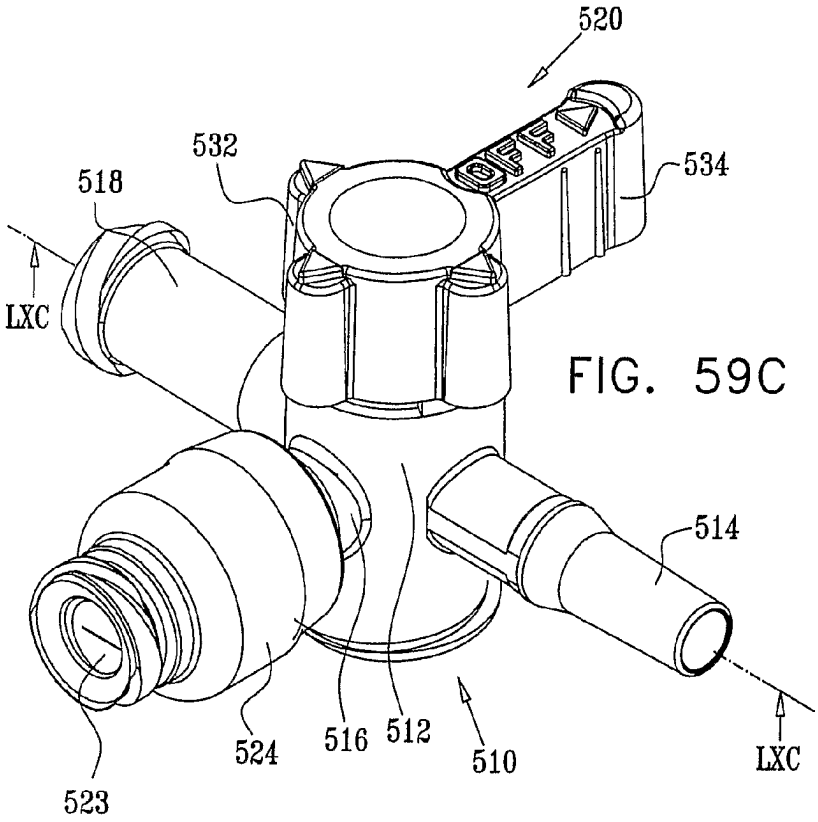


FIG. 59C

FIG. 59D

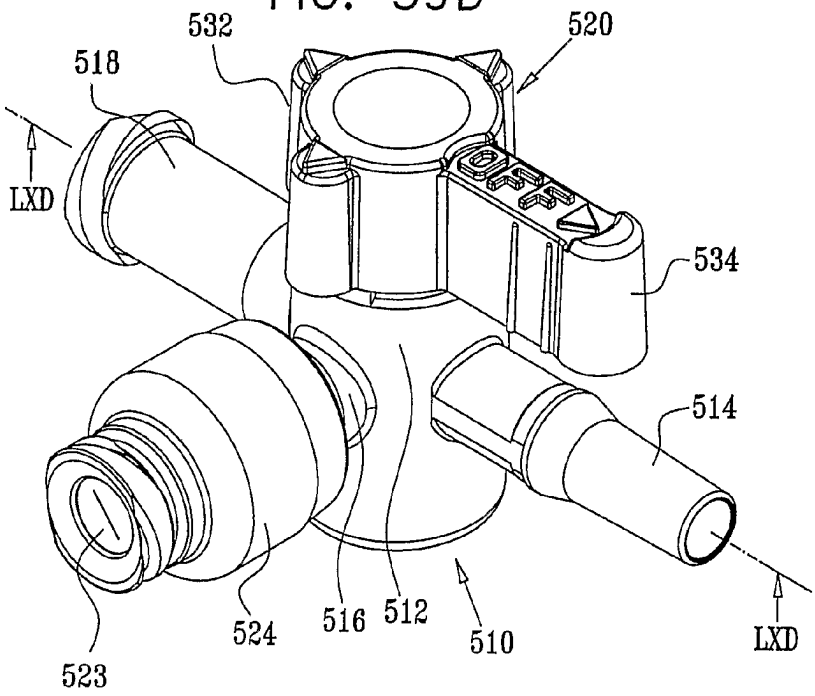

FIG. 60A

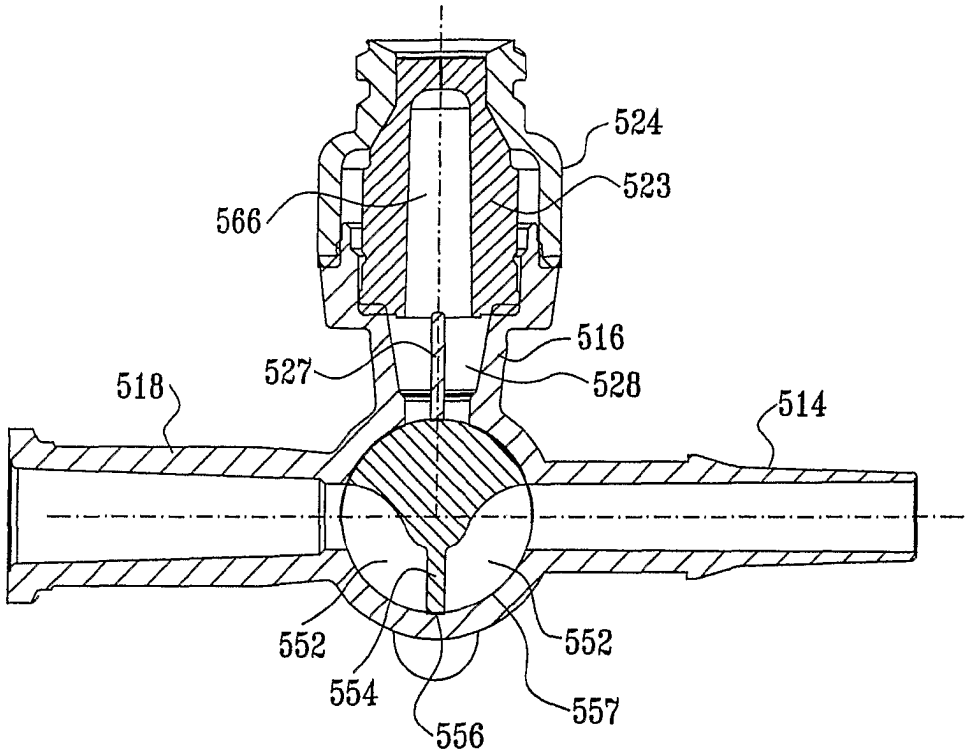


FIG. 60B

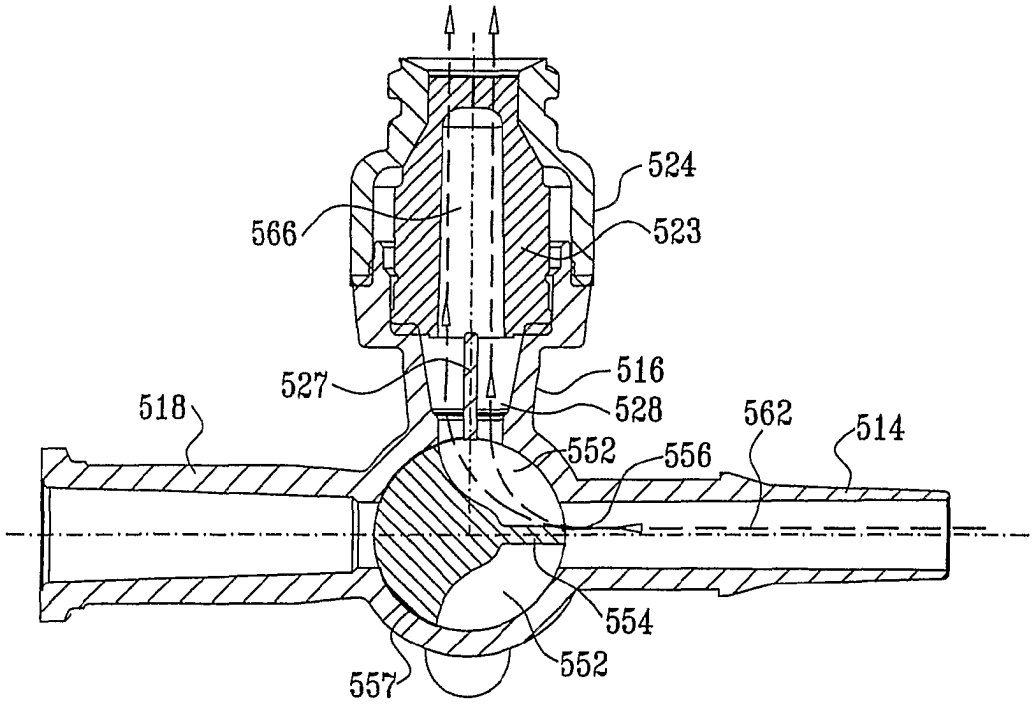

FIG. 60C

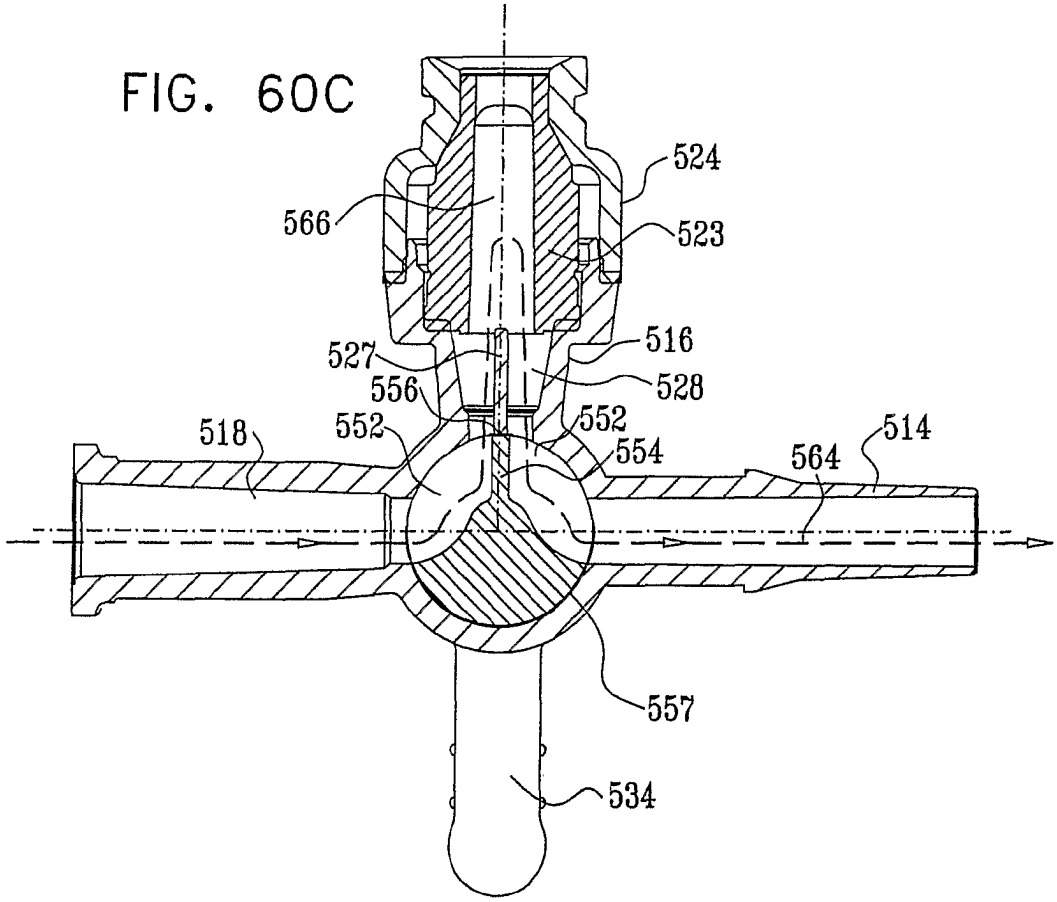


FIG. 60D

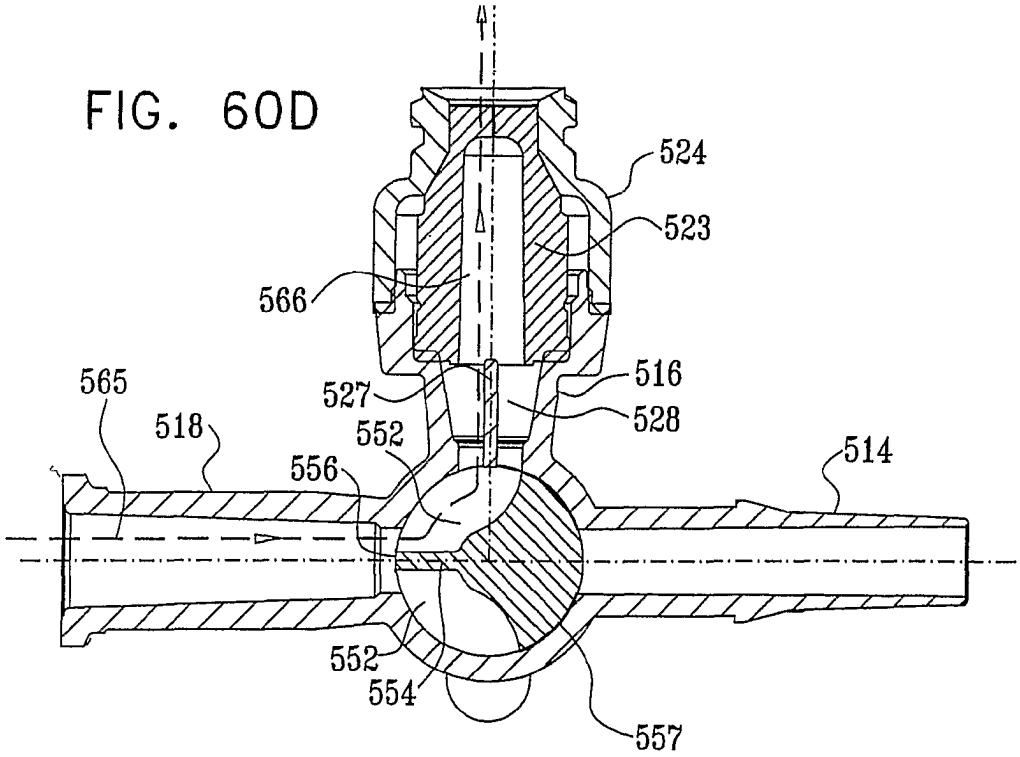

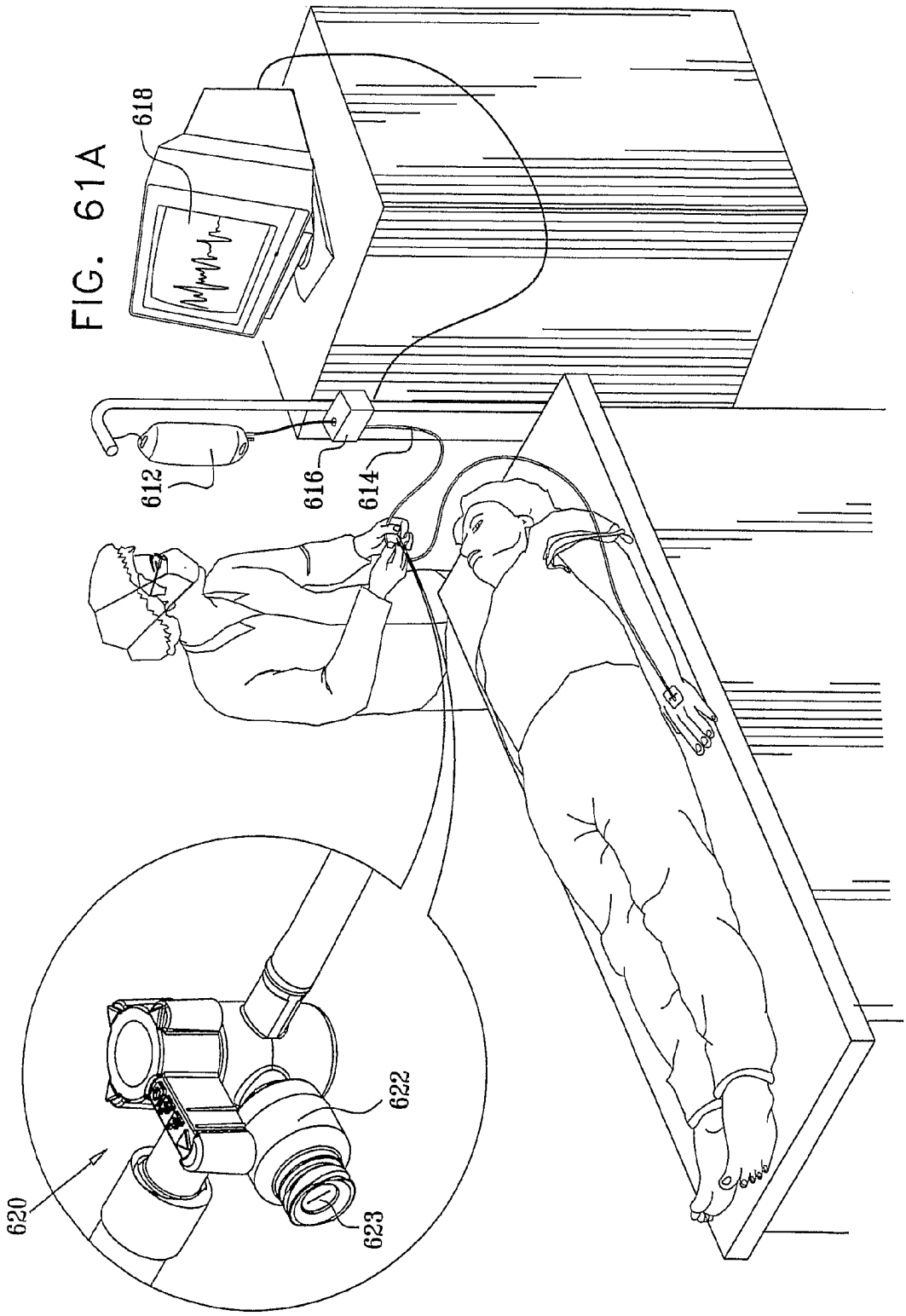


FIG. 61A

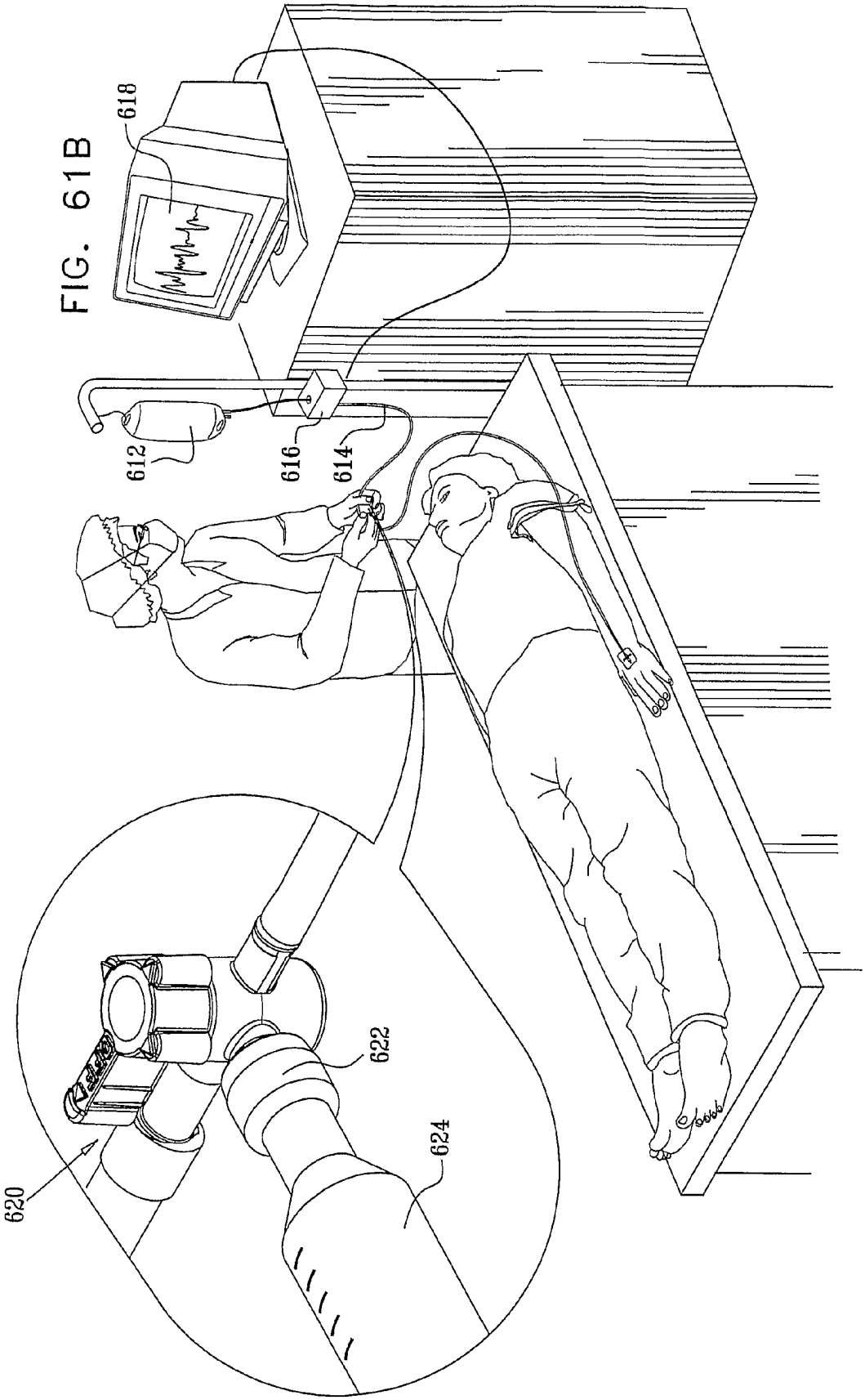


FIG. 61B

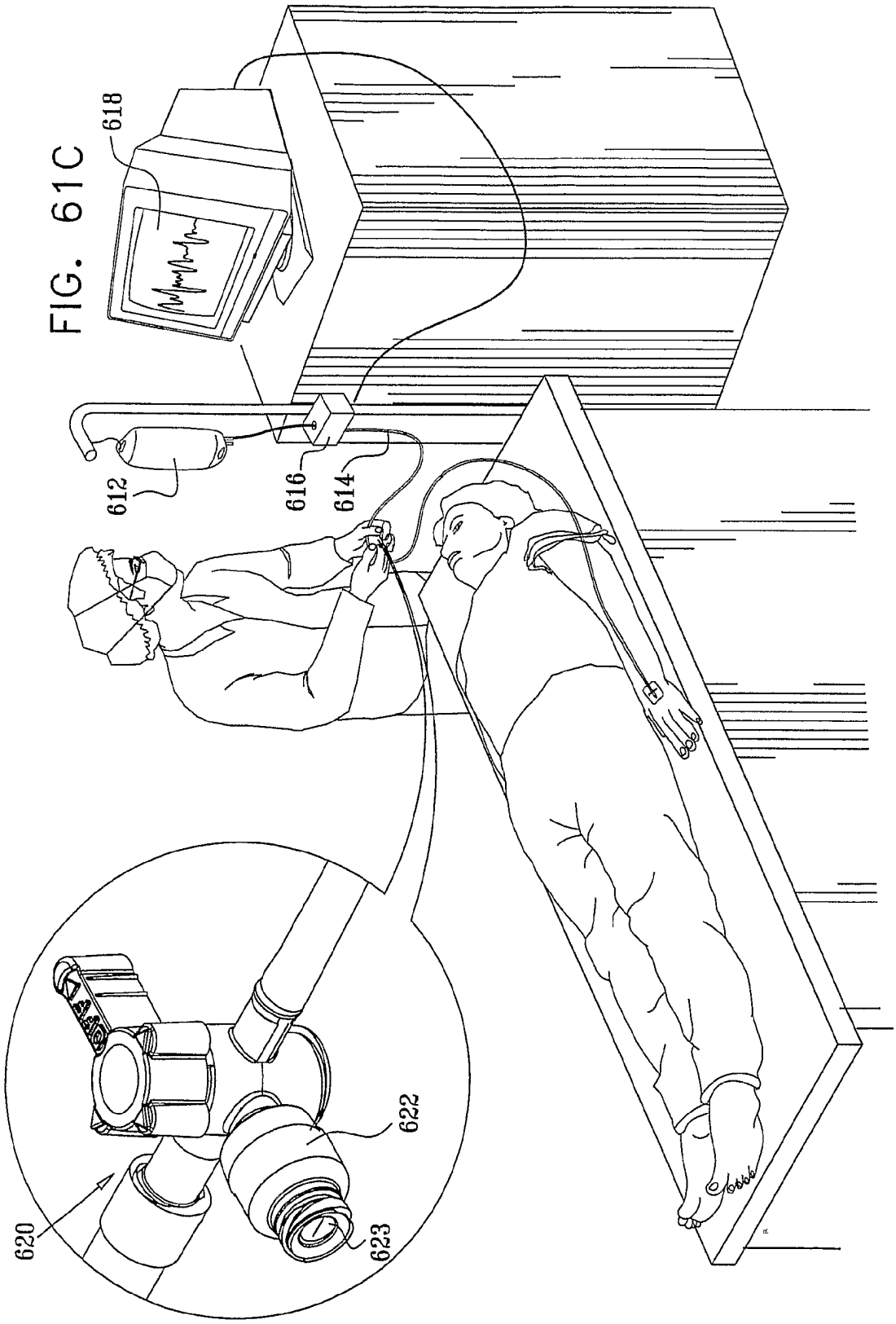


FIG. 61C

# STOPCOCK

## REFERENCE TO RELATED APPLICATIONS

Reference is made to U.S. Provisional Patent Application 60/607,113, filed Sep. 2, 2004 entitled "CLOSED STOPCOCK" and to U.S. Provisional Patent Application 60/641,909, filed Jan. 5, 2005 entitled "CLOSED STOPCOCK FOR ARTERIAL MONITORING", the disclosures of which are hereby incorporated by reference and priority of which is hereby claimed pursuant to 37 CFR 1.78(a) (4) and (5)(i).

## FIELD OF THE INVENTION

The present invention related to stopcocks generally, and more specifically to swabbable stopcocks.

## BACKGROUND OF THE INVENTION

The following publications are believed to represent the current state of the art: U.S. Pat. Nos. 5,549,651, RE 37,357 and 6,238,372 and U.S. Patent application 2004/0210162.

## SUMMARY OF THE INVENTION

The present invention seeks to provide an improved swabbable stopcock device.

There is thus provided in accordance with a preferred embodiment of the present invention a stopcock including a housing element defining at least first, second and third ports, a handle element which is selectably positionable relative to the housing element, at least one fluid passageway communicating between at least two of the at least first, second and third ports, the at least one fluid passageway being selectably defined by at least one of the housing element and the handle element, the at least one fluid passageway being configured for enabling flushing an internal volume of at least one of the first, second and third ports by a fluid flow which does not flow entirely through the port whose internal volume is being flushed.

Preferably, the handle element and the housing element are arrangeable in multiple mutual positions wherein the at least one fluid passageway is configured for enabling flushing the internal volume of at least one of the first, second and third ports when the housing element and the handle element are in at least one of the multiple mutual positions.

Preferably, the stopcock also includes at least one valve, which is associated with at least one of the first, second and third ports. Additionally, the valve includes an elastomeric element and the at least one fluid passageway is configured for providing a fluid flow which is sealed from the elastomeric element when the housing element and the handle are in another one of the mutual positions.

Additionally, the at least one fluid passageway is defined by a shaft portion of the handle element.

Preferably, the stopcock also includes a fluid flow guide associated with the at least one fluid passageway for enabling flushing of the internal volume of the at least one of the first, second and third ports when the housing element and the handle element are in the at least one of the mutual positions by the fluid flow which does not flow entirely through the port whose internal volume is being flushed.

Preferably, the at least one fluid passageway is defined by at least one recess formed on a peripheral surface of the handle element. Alternatively, the at least one fluid passageway is defined by at least one bore formed within the shaft portion of the handle element. Additionally or alternatively, the fluid flow guide extends radially and partially bifurcates the at least one fluid passageway.



Preferably, the fluid flow guide includes a concave outward facing edge. Alternatively, the fluid flow guide includes an outward facing edge adapted to prevent flow of liquid when the fluid flow guide is not located opposite at least one of the ports. Additionally, at least one of the at least one port is bifurcated by the fluid flow guide.

Preferably, the housing element includes a side recess located within a central bore of the housing element.

There is also provided in accordance with another preferred embodiment of the present invention an arterial monitoring set including an arterial line adapted to be connected at a first end thereof to a source of liquid under pressure and at a second end thereof to an artery of a patient, a pressure transducer disposed along the arterial line for sensing liquid pressure therein, a stopcock disposed along the arterial line, the stopcock including a housing element defining at least first, second and third ports, a handle element which is selectably positionable relative to the housing element, at least one fluid passageway communicating between at least two of the at least first, second and third ports, the at least one fluid passageway being selectably defined by at least one of the housing element and the handle element, the at least one fluid passageway being configured for enabling flushing an internal volume of at least one of the first, second and third ports by a fluid flow which flows through the arterial line to the patient.

Preferably, the handle element and the housing element are arrangeable in multiple mutual positions and the at least one fluid passageway is configured for enabling flushing the internal volume of at least one of the first, second and third ports when the housing element and the handle element are in at least one of the multiple mutual positions.

Preferably, the stopcock includes at least one valve, which is associated with at least one of the first, second and third ports. Additionally, the valve includes an elastomeric element and the at least one fluid passageway is configured for providing a fluid flow which is sealed from the elastomeric element when the housing element and the handle are in another one of the mutual positions.

Preferably, the at least one fluid passageway is defined by a shaft portion of the handle element.

Additionally, the arterial monitoring set also includes a fluid flow guide associated with the at least one fluid passageway for enabling flushing of the internal volume of at least one of the first, second and third ports when the housing element and the handle element are in at least one of the mutual positions by the fluid flow which flows through the arterial line to the patient.

Preferably, the at least one fluid passageway is defined by at least one recess formed on a peripheral surface of the handle element. Alternatively, the at least one fluid passageway is defined by at least one bore formed within the shaft portion of the handle element. Additionally or alternatively, the fluid flow guide extends radially and partially bifurcates the at least one fluid passageway.

Preferably, the fluid flow guide includes a concave outward facing edge. Alternatively, the fluid flow guide includes an outward facing edge to prevent flow of liquid when the fluid flow guide is not located opposite at least one of the ports.

Preferably, at least one of the at least one port is bifurcated by the fluid flow guide. Alternatively or additionally, the housing element includes a side recess located within a central bore of the housing element.

There is further provided in accordance with yet another preferred embodiment of the present invention a method of providing fluid communication with the circulatory system of

a patient including providing a stopcock including a housing element defining at least first, second and third ports, a handle element which is selectably positionable relative to the housing element, at least one fluid passageway communicating between at least two of the at least first, second and third ports, the at least one fluid passageway being selectably defined by at least one of the housing element and the handle element, providing a flow of a first fluid through the stopcock in communication with the circulatory system of the patient when the handle element and the housing element are in a first mutual position, and providing a flow of a second fluid through the stopcock in communication with the circulatory system of the patient when the handle element and the housing element are in a second mutual position, thereby flushing an internal volume of at least one of the first, second and third ports by the second fluid which does not flow entirely through the port whose internal volume is being flushed.

Preferably, the flow of the first fluid passes through the stopcock from the second port to the third port and the flow of the second fluid passes through the stopcock from the first port to the third port. Alternatively, the flow of the first fluid passes through the stopcock from the third port to the second port and the flow of the second fluid passes through the stopcock from the third port to the first port.

Preferably, the stopcock also includes at least one valve, which is associated with at least one of the first, second and third ports. Additionally, the valve includes an elastomeric element and the at least one fluid passageway is configured for providing a fluid flow which is sealed from the elastomeric element when the housing element and the handle are in a third mutual position.

## BRIEF DESCRIPTION OF THE DRAWINGS

The present invention will be understood and appreciated more fully from the following detailed description, taken in conjunction with the drawings in which:

FIG. **1** is a simplified exploded view illustration of a stopcock constructed and operative in accordance with a preferred embodiment of the present invention;

FIGS. **2** and **3** are simplified pictorial illustrations of a housing element, and a threaded plug, which form part of the stopcock of FIG. **1** taken in two different directions;

FIGS. **4**A and **4**B are sectional illustrations taken along section lines IVA-IVA and IVB-IVB in FIGS. **2** and **3**, respectively;

FIGS. **5**A and **5**B are simplified pictorial illustrations of a handle element which forms part of the stopcock of FIG. **1** in two orientations;

FIGS. **6**A and **6**B are simplified plan view illustrations of the handle element of FIGS. **5**A and **5**B taken along respective directions A and B in FIG. **5**A;

FIGS. **7**, **8**A and **8**B are sectional illustrations taken along section lines VII-VII, VIIIA-VIIIA and VIIIB-VIIIB in FIG. **5**B;

FIGS. **9**A, **9**B, **9**C, **9**D and **9**E are simplified pictorial illustrations of the stopcock of FIG. **1** in five operative orientations;

FIGS. **10**A, **10**B, **10**C, **10**D and **10**E are sectional illustrations taken along section lines XA-XA, XB-XB, XC-XC, XD-XD and XE-XE in FIGS. **9**A, **9**B, **9**C, **9**D and **9**E respectively;

FIG. **11** is a simplified exploded view illustration of a stopcock constructed and operative in accordance with another preferred embodiment of the present invention;

FIGS. **12** and **13** are simplified pictorial illustrations of a housing element, which forms part of the stopcock of FIG. **11** taken in two different directions;

FIGS. **14**A and **14**B are sectional illustrations taken along section lines XIVA-XIVA and XIVB-XIVB in FIGS. **12** and **13**, respectively;

FIGS. **15**A and **15**B are simplified pictorial illustrations of a handle element which forms part of the stopcock of FIG. **11** in two orientations;

FIGS. **16**A and **16**B are simplified plan view illustrations of the handle element of FIGS. **15**A and **15**B taken along respective directions A and B in FIG. **15**A;

FIGS. **17**, **18**A and **18**B are sectional illustrations taken along section lines XVII-XVII, XVIIIA-XVIIIA and XVIIIB-XVIIIB in FIG. **15**B;

FIGS. **19**A, **19**B, **19**C and **19**D are simplified pictorial illustrations of the stopcock of FIG. **11** in four operative orientations;

FIGS. **20**A, **20**B, **20**C and **20**D are sectional illustrations taken along section lines XXA-XXA, XXB-XXB, XXC-XXC and XXD-XXD in FIGS. **19**A, **19**B, **19**C and **19**D respectively;

FIG. **21** is a simplified exploded view illustration of a stopcock constructed and operative in accordance with an additional preferred embodiment of the present invention;

FIGS. **22** and **23** are simplified pictorial illustrations of a housing element, which forms part of the stopcock of FIG. **21** taken in two different directions;

FIGS. **24**A and **24**B are sectional illustrations taken along section lines XXIVA-XXIVA and XXIVB-XXIVB in FIGS. **22** and **23**, respectively;

FIGS. **25**A and **25**B are simplified pictorial illustrations of a handle element which forms part of the stopcock of FIG. **21** in two orientations;

FIGS. **26**A and **26**B are simplified plan view illustrations of the handle element of FIGS. **25**A and **25**B taken along respective directions A and B in FIG. **25**A;

FIGS. **27**, **28**A and **28**B are sectional illustrations taken along section lines XXVII-XXVII, XXVIIIA-XXVIIIA and XXVIIIB-XXVIIIB in FIG. **25**B;

FIGS. **29**A, **29**B, **29**C and **29**D are simplified pictorial illustrations of the stopcock of FIG. **21** in four operative orientations;

FIGS. **30**A, **30**B, **30**C and **30**D are sectional illustrations taken along section lines XXXA-XXXA, XXXB-XXXB, XXXC-XXXC and XXXD-XXXD in FIGS. **29**A, **29**B, **29**C and **29**D respectively;

FIG. **31** is a simplified exploded view illustration of a stopcock constructed and operative in accordance with a further preferred embodiment of the present invention;

FIGS. **32** and **33** are simplified pictorial illustrations of a housing element, which forms part of the stopcock of FIG. **31** taken in two different directions;

FIGS. **34**A and **34**B are sectional illustrations taken along section lines XXXIVA-XXXIVA and XXXIVB-XXXIVB in FIGS. **32** and **33**, respectively;

FIGS. **35**A and **35**B are simplified pictorial illustrations of a handle element which forms part of the stopcock of FIG. **31** in two orientations;

FIGS. **36**A and **36**B are simplified plan view illustrations of the handle element of FIGS. **35**A and **35**B taken along respective directions A and B in FIG. **35**A;

FIGS. **37**, **38**A and **38**B are sectional illustrations taken along section lines XXXVII-XXXVII, XXXVIIIA-XXXVIIIA and XXXVIIIB-xxXVIIIB in FIG. **35**B;

FIGS. **39**A, **39**B, **39**C and **39**D are simplified pictorial illustrations of the stopcock of FIG. **31** in four operative orientations;

FIGS. **40**A, **40**B, **40**C and **40**D are sectional illustrations taken along section lines XLA-XLA, XLB-XLB, XLC-XLC and XLD-XLD in FIGS. **39**A, **39**B, **39**C and **39**D respectively;

FIG. **41** is a simplified exploded view illustration of a stopcock constructed and operative in accordance with yet another preferred embodiment of the present invention;

FIGS. **42** and **43** are simplified pictorial illustrations of a housing element, which forms part of the stopcock of FIG. **41** taken in two different directions;

FIGS. **44**A and **44**B are sectional illustrations taken along section lines XLIVA-XLIVA and XLIVB-XLIVB in FIGS. **42** and **43**, respectively;

FIGS. **45**A and **45**B are simplified pictorial illustrations of a handle element which forms part of the stopcock of FIG. **41** in two operative orientations;

FIGS. **46**A and **46**B are simplified plan view illustrations of the handle element of FIGS. **45**A and **45**B taken along respective directions A and B in FIG. **45**A;

FIGS. **47**, **48**A and **48**B are sectional illustrations taken along section lines XLVII-XLVII, XLVIIIA-XLVIIIA and XLVIIIB-XLVIIIB in FIG. **45**B;

FIGS. **49**A, **49**B, **49**C and **49**D are simplified pictorial illustrations of the stopcock of FIG. **41** in four operative orientations;

FIGS. **50**A, **50**B, **50**C and **50**D are sectional illustrations taken along section lines LA-LA, LB-LB, LC-LC and LD-LD in FIGS. **49**A, **49**B, **49**C and **49**D respectively;

FIG. **51** is a simplified exploded view illustration of a stopcock constructed and operative in accordance with a further preferred embodiment of the present invention;

FIGS. **52** and **53** are simplified pictorial illustrations of a housing element, which forms part of the stopcock of FIG. **51** taken in two different directions;

FIGS. **54**A and **54**B are sectional illustrations taken along section lines LIVA-LIVA and LIVB-LIVB in FIG. **53**;

FIGS. **55**A and **55**B are simplified pictorial illustrations of a handle element which forms part of the stopcock of FIG. **51** in two operative orientations;

FIGS. **56**A and **56**B are simplified plan view illustrations of the handle element of FIGS. **55**A and **55**B taken along respective directions A and B in FIG. **55**A;

FIGS. **57**, **58**A and **58**B are sectional illustrations taken along section lines LVII-LVII, LVIIIA-LVIIIA and LVIIIB-LVIIIB in FIG. **55**B;

FIGS. **59**A, **59**B, **59**C and **59**D are simplified pictorial illustrations of the stopcock of FIG. **51** in four operative orientations;

FIGS. **60**A, **60**B, **60**C and **60**D are sectional illustrations taken along section lines LXA-LXA, LXB-LXB, LXC-LXC and LXD-LXD in FIGS. **59**A, **59**B, **59**C and **59**D respectively; and

FIGS. **61**A, **61**B and **61**C are simplified pictorial illustrations of an arterial monitoring set constructed and operative in accordance with a preferred embodiment of the present invention in various operative orientations.

## DETAILED DESCRIPTION OF PREFERRED EMBODIMENTS

Reference is now made to FIG. **1**, which is an exploded view illustration of a stopcock, constructed and operative in accordance with a preferred embodiment of the present invention. As seen in FIG. **1**, the stopcock comprises a housing element **10** including a main tubular portion **12** and three side ports, designated by reference numerals **14**, **16** and **18** respectively. A handle element **20** is arranged to be seated within main tubular portion **12** of housing element **10**. A typical threaded plug **23** is adapted to be connected to side port **16**.

Reference is now made additionally to FIGS. **2** and **3** which are pictorial illustrations of housing element **10** and to FIGS. **4**A and **4**B which are sectional illustrations thereof. As seen in FIGS. **1**-**4**B, tubular portion **12** of housing element **10** is generally cylindrical, arranged about an axis **22**, and has side ports **14**, **16** and **18** extending in different directions therefrom, typically separated by 90 degrees about axis **22**. Port **14** is preferably a male port which preferably meets luer standard ISO 594-1, while ports **16** and **18** are preferably female ports, which preferably meet luer standard ISO 594-1. Conventional plugs, nuts and covers may be used in association with ports **14**, **16** and **18**. As seen particularly in FIGS. **1**-**3**, threaded plug **23** is shown arranged for sealing engagement with port **16**. Tubular portion **12** includes a central bore **24** having a slightly conical configuration, which is formed with a circumferential undercut **26**. Port **16** defines an internal volume **25**.

Reference is now made to FIGS. **5**A-**8**B, which illustrate handle element **20**. As seen in FIGS. **5**A-**8**B, the handle element includes a shaft portion **30**, which is integrally formed with a top portion **32** from which extends a finger-engageable protrusion **34**. It is appreciated that any other suitable general configuration of the top portion of the handle element may alternatively be employed.

Shaft portion **30** is generally symmetrical about a shaft axis **42** and has a slightly conical outer surface **44**, typically having an angle $\alpha$ (as seen particularly in FIG. **6**A) of 3-4 degrees, which corresponds to the slightly conical configuration of central bore **24** for rotatable sealing engagement therewith. As seen particularly in FIGS. **8**A and **8**B, shaft portion **30** is typically formed with mutually sealed top and bottom cylindrical recesses **46** and **48**, which are sealingly separated by a divider **50**.

Disposed generally between recesses **46** and **48** and sealed therefrom is a partially peripherally-extending recess **52**, selectably defining a fluid flow passageway between selectable ones of side ports **14**, **16** and **18** depending on the rotational orientation of the handle element **20** relative to the housing element **10**. Preferably extending radially and partially bifurcating the recess **52** is a fluid flow guide **54**, which directs the flow of liquid between ports **14** and **18** through the passageway defined by recess **52** into the internal volume **25** of port **16** for flushing thereof, when the handle element **20** is suitably positioned. The radially outward facing edge **56** of fluid flow guide **54** is formed with a concave configuration.

Reference is now made to FIGS. **9**A, **9**B, **9**C, **9**D and **9**E, which are simplified pictorial illustrations of the stopcock of FIG. **1** in five operative orientations and to FIGS. **10**A, **10**B, **10**C, **10**D and **10**E, which are sectional illustrations of the stopcock of FIGS. **9**A, **9**B, **9**C, **9**D and **9**E respectively.

FIGS. **9**A and **10**A illustrate a first operating position of the stopcock of FIG. **1** when port **16** is sealed as by threaded plug **23**. The user typically connects a source of pressurized fluid, such as an IV set, to port **18** and the liquid flows through port **18** and partially peripherally-extending recess **52** and past the concave edge **56** of fluid flow guide **54** via port **14** to the patient, as indicated by an arrow **60**.

FIGS. **9**B and **10**B illustrate a second operating position of the stopcock of FIG. **1**, which is typically employed for drawing blood or other fluids from the patient. The user typically connects a syringe (not shown) to port **16** and draws blood

from the patient through port **14** and partially peripherally-extending recess **52** through port **16** to the syringe, as indicated by an arrow **62**. It is appreciated that this operating position may also be used for supplying a medicament to the patient when port **18** is closed, in a flow direction opposite to that indicated by arrow **62**.

FIGS. **9**C and **10**C illustrate a third operating position of the stopcock of FIG. **1**, which is typically employed for supplying a medicament to the patient when port **16** is open or connected to a secondary line (not shown). A secondary line may be a source of medicament. The medicament flows through port **16** and partially peripherally-extending recess **52** through port **14** to the patient, as indicated by an arrow **63**. At the same time, liquid flows via port **18** and partially peripherally-extending recess **52**, around fluid flow guide **54**, and slightly into the internal volume **25** of port **16**, via port **14** to the patient, as indicated by an arrow **64**.

FIGS. **9**D and **10**D illustrate a fourth operating position of the stopcock of FIG. **1**, which is typically employed for supplying a liquid to the patient from port **18** to port **14**, when port **16** is sealed as by threaded plug **23**. Liquid flows via port **18** and partially peripherally-extending recess **52**, around fluid flow guide **54**, and into the internal volume **25** of port **16**, flushing residual liquid therefrom, via port **14** to the patient, as indicated by an arrow **66**.

It is a particular feature of the present invention that the provision of fluid flow guide **54** generally overcomes problems of the presence of residual liquids remaining in the internal volume **25** of port **16**. This is important in various therapeutic situations. For example when blood is drawn from the patient through port **16**, there remains residual blood in the internal volume **25** of port **16**. This blood, if left in internal volume **25** for a period of time, can clot and thus become dangerous if delivered to the patient. In addition, the coagulated blood could occlude the liquid passageway extending through port **16**. Various infections could possibly arise as a result of the retained blood.

This feature is also useful when a medicament is supplied to a patient through port **16**. If a portion of the medicament remains in the internal volume **25** of port **16**, the dosage of the medicament that the patient receives is less than the intended dosage by an amount which cannot be readily ascertained. In addition, this residual medicament might be inadvertently supplied to the patient during a subsequent use of the stopcock, which could cause harm to the patient.

The present invention provides for automatic flushing of the liquid, such as blood or medicament, from the internal volume **25** and typically returning it to the patient without requiring the use of extra syringes, the manipulation of the threaded plug **23** and opening the medical set to the atmosphere, which could increase the chance of contamination.

FIGS. **9**E and **10**E illustrate a fifth operating position of the stopcock of FIG. **1**, which may be used for flushing the IV set upstream of the stopcock, when port **16** is open to the atmosphere. Liquid flows via port **18**, around fluid flow guide **54** and through partially peripherally-extending recess **52**, to the atmosphere via port **16**, as indicated by an arrow **68**. Alternatively, this operating position may be employed for pushing liquid via the side port **16** and through port **18** in a direction opposite arrow **68**, for example when it is desired to mix liquid in the pressure bag.

Reference is now made to FIG. **11**, which is an exploded view illustration of a stopcock constructed and operative in accordance with a preferred embodiment of the present invention. As seen in FIG. **11**, the stopcock comprises a housing element **110** including a main tubular portion **112** and three side ports, designated by reference numerals **114**, **116** and **118** respectively. A handle element **120** is arranged to be seated within main tubular portion **112** of housing element **110**.

Reference is now made additionally to FIGS. **12** and **13** which are pictorial illustrations of housing element **110** and to FIGS. **14**A and **14**B which are sectional illustrations thereof. As seen in FIGS. **11**-**14**B, tubular portion **112** of housing element **110** is generally cylindrical, arranged about an axis **122**, and has side ports **114**, **116** and **118** extending in different directions therefrom, typically separated by 90 degrees about axis **122**. Port **114** is preferably a male port which preferably meets luer standard ISO 594-1, while port **116** incorporates a normally closed swabbable valve which is configured to receive a male luer and port **118** is preferably a female port, which preferably meets luer standard ISO 594-1. Conventional plugs, nuts and covers may be used in association with ports **114** and **118**.

Port **116** of housing element **110** includes a valve employing an elastomeric element **123**, held in place by a cap **124**, which is welded or otherwise fixed to housing element **110**. Elastomeric element **123** and cap **124** are commercially available from Halkey-Roberts Corporation of St. Petersburg, Fla., USA and described in one or more of U.S. Pat. Nos. 6,651,956; 6,089,541 and 6,036,171, the disclosures of which are hereby incorporated by reference. Alternatively, valves and valve elements commercially available from other sources such as Becton-Dickinson, Cardinal, Medegen and Filtertek may be employed.

Tubular portion **112** includes a central bore **125** having a slightly conical configuration, which is formed with a circumferential undercut **126**. Port **116** defines an internal volume **127**.

Reference is now made to FIGS. **15**A-**18**B, which illustrate handle element **120**. As seen in FIGS. **15**A-**18**B, the handle element includes a shaft portion **130**, which is integrally formed with a top portion **132** from which extends a finger-engageable protrusion **134**. It is appreciated that any other suitable general configuration of the top portion of the handle element may alternatively be employed.

Shaft portion **130** is generally symmetrical about a shaft axis **142** and has a slightly conical outer surface **144**, typically having an angle $\alpha$ (as seen particularly in FIG. **16**A) of 3-4 degrees, which corresponds to the slightly conical configuration of central bore **125** for rotatable sealing engagement therewith. As seen particularly in FIGS. **18**A and **18**B, shaft portion **130** is typically formed with mutually sealed top and bottom cylindrical recesses **146** and **148**, which are sealingly separated by a divider **150**.

Disposed generally between recesses **146** and **148** and sealed therefrom is a partially peripherally-extending recess **152**, selectably defining a fluid flow passageway between selectable ones of side ports **114**, **116** and **118** depending on the rotational orientation of the handle element **120** relative to the housing element **110**. Preferably extending radially and partially bifurcating the recess **152** is a fluid flow guide **154**, which directs the flow of liquid between ports **114** and **118** through the passageway defined by recess **152** into the internal volume **127** of port **116** for flushing thereof, when the handle element **120** is suitably positioned. The radially outward facing edge **156** of fluid flow guide **154** is formed with a concave configuration.

Reference is now made to FIGS. **19**A, **19**B, **19**C and **19**D, which are simplified pictorial illustrations of the stopcock of FIG. **11** in four operative orientations and to FIGS. **20**A, **20**B, **20**C and **20**D, which are sectional illustrations of the stopcock of FIGS. **19**A, **19**B, **19**C and **19**D, respectively.

FIGS. **19**A and **20**A illustrate a first operating position of the stopcock of FIG. **11**. The user typically connects a source of pressurized fluid, such as an IV set, to port **118** and the liquid flows through port **118** and partially peripherally-extending recess **152** and past the concave edge **156** of fluid flow guide **154** via port **114** to the patient, as indicated by an arrow **160**.

FIGS. **19**B and **20**B illustrate a second operating position of the stopcock of FIG. **11**, which is typically employed for drawing blood or other fluids from the patient. The user typically connects a syringe to port **116** and draws blood from the patient through port **114** and partially peripherally-extending recess **152** through port **116** to the syringe, as indicated by an arrow **162**. It is appreciated that this operating position may also be used for supplying a medicament to the patient when port **118** is closed, in a flow direction opposite to that indicated by arrow **162**.

FIGS. **19**C and **20**C illustrate a third operating position of the stopcock of FIG. **11**, which is typically employed for supplying a liquid to the patient from port **118** to port **114**. Liquid flows via port **118** and partially peripherally-extending recess **152**, around fluid flow guide **154**, and into the internal volume **127** of port **116** as well as an internal volume **166** of the elastomeric element **123**, flushing residual liquid therefrom, via port **114** to the patient, as indicated by an arrow **164**.

It is a particular feature of the present invention that the provision of fluid flow guide **154** generally overcomes problems of the presence of residual liquids remaining in the internal volume **127** of port **116** as well as in internal volume **166** of the elastomeric element **123**. This is important in various therapeutic situations. For example when blood is drawn from the patient through port **116**, there remains residual blood in the internal volumes **127** of port **116** and **166** of elastomeric element **123**. This blood, if left in internal volumes **127** and **166** for a period of time, can clot and thus become dangerous if delivered to the patient. In addition, the coagulated blood could occlude the liquid passageway extending through port **116**. Various infections could possibly arise as a result of the retained blood.

This feature is also useful when a medicament is supplied to a patient through port **116**. If a portion of the medicament remains in the internal volumes **127** of port **116** and **166** of the elastomeric element **123**, the dosage of the medicament that the patient receives is less than the intended dosage by an amount which cannot be readily ascertained. In addition, this residual medicament might be inadvertently supplied to the patient during a subsequent use of the stopcock, which could cause harm to the patient.

The present invention provides for automatic flushing of the liquid, such as blood or medicament, from the internal volumes **127** and **166** and typically returning it to the patient without requiring the use of extra syringes and the opening of the medical set to the atmosphere, thereby increasing the chance of contamination.

FIGS. **19**D and **20**D illustrate a fourth operating position of the stopcock of FIG. **11**, which may be used for flushing the IV set upstream of the stopcock, when port **116** is open to the atmosphere as by insertion of a male luer connector, such as a syringe tip (not shown), into the elastomeric element **123** of the valve thereof. The insertion of the male luer connector activates the flow of liquid from port **118**, around fluid flow guide **154** and through partially peripherally-extending recess **152**, to the male luer connector via the elastomeric element **123** of port **116**, as indicated by an arrow **165**. Alternatively, this operating position may be employed for pushing liquid via the side port **116** and through port **118** in a direction opposite arrow **165**, for example when it is desired to mix liquid in the pressure bag.

Reference is now made to FIG. **21**, which is an exploded view illustration of a stopcock constructed and operative in accordance with a preferred embodiment of the present invention. As seen in FIG. **21**, the stopcock comprises a housing element **210** including a main tubular portion **212** and three side ports, designated by reference numerals **214**, **216** and **218** respectively. A handle element **220** is arranged to be seated within main tubular portion **212** of housing element **210**.

Reference is now made additionally to FIGS. **22** and **23** which are pictorial illustrations of housing element **210** and to FIGS. **24**A and **24**B which are sectional illustrations thereof. As seen in FIGS. **21**-**24**B, tubular portion **212** of housing element **210** is generally cylindrical, arranged about an axis **222**, and has side ports **214**, **216** and **218** extending in different directions therefrom, typically separated by 90 degrees about axis **222**. Port **214** is preferably a male port which preferably meets luer standard ISO 594-1, while port **216** incorporates a normally closed swabbable valve which is configured to receive a male luer and port **218** is preferably a female port, which preferably meets luer standard ISO 594-1. Conventional plugs, nuts and covers may be used in association with ports **214** and **218**.

Port **216** of housing element **210** includes a valve employing an elastomeric element **223**, held in place by a cap **224**, which is welded or otherwise fixed to housing element **110**. Elastomeric element **123** and cap **124** are commercially available from Halkey-Roberts Corporation of St. Petersburg, Fla., USA and described in one or more of U.S. Pat. Nos. 6,651,956; 6,089,541 and 6,036,171, the disclosures of which are hereby incorporated by reference. Alternatively, valves and valve elements commercially available from other sources such as Becton-Dickinson, Cardinal, Medegen and Filtertek may be employed.

Tubular portion **212** includes a central bore **225** having a slightly conical configuration, which is formed with a circumferential undercut **226**. Port **216** defines an internal volume **227**.

Reference is now made to FIGS. **25**A-**28**B, which illustrate handle element **220**. As seen in FIGS. **25**A-**28**B, the handle element includes a shaft portion **230**, which is integrally formed with a top portion **232** from which extends a finger-engageable protrusion **234**. It is appreciated that any other suitable general configuration of the top portion of the handle element may alternatively be employed.

Shaft portion **230** is generally symmetrical about a shaft axis **242** and has a slightly conical outer surface **244**, typically having an angle $\alpha$ (as seen particularly in FIG. **26**A) of 3-4 degrees, which corresponds to the slightly conical configuration of central bore **225** for rotatable sealing engagement therewith. As seen particularly in FIGS. **28**A and **28**B, shaft portion **230** is typically formed with mutually sealed top and bottom cylindrical recesses **246** and **248**, which are sealingly separated by a divider **250**.

Disposed generally between recesses **246** and **248** and sealed therefrom is a partially peripherally-extending recess **252**, selectably defining a fluid flow passageway between selectable ones of side ports **214**, **216** and **218** depending on the rotational orientation of the handle element **220** relative to the housing element **210**. Preferably extending radially and partially bifurcating the recess **252** is a fluid flow guide **254**, which directs the flow of liquid between ports **214** and **218** through the passageway defined by recess **252** into the internal volume **227** of port **216** for flushing thereof, when the

handle element **220** is suitably positioned. The radially outward facing edge **256** of fluid flow guide **254** is formed with a suitably tapered configuration in order to prevent liquid flow therepast when fluid flow guide **254** is not located opposite a port.

Reference is now made to FIGS. **29**A, **29**B, **29**C and **29**D, which are simplified pictorial illustrations of the stopcock of FIG. **21** in four operative orientations and to FIGS. **30**A, **30**B, **30**C and **30**D, which are sectional illustrations of the stopcock of FIGS. **29**A, **29**B, **29**C and **29**D, respectively.

FIGS. **29**A and **30**A illustrate a first operating position of the stopcock of FIG. **21**. As seen, there is no fluid communication between any of the ports. Liquid does not flow from port **218** to port **214**, because it is blocked by fluid flow guide **254**, whose edge **256** sealingly engages an inner facing wall **257** of bore **225** of housing element **210**. This orientation may be utilized to close all three ports.

The operative orientation shown in FIGS. **29**A and **30**A may be advantageously employed when it is desired to prevent all flow of liquid through the stopcock. The procedure currently used requires careful placement of the handle to an angle 45 degrees from one of the ports. Such a procedure is unreliable and requires careful attention of the operator, which may be a doctor or a nurse in the middle of a surgery.

FIGS. **29**B and **30**B illustrate a second operating position of the stopcock of FIG. **21**, which is typically employed for drawing blood or other fluids from the patient. The user typically connects a syringe to port **216** and draws blood from the patient through port **214** and partially peripherally-extending recess **252** through port **216** to the syringe, as indicated by an arrow **262**. It is appreciated that this operating position may also be used for supplying a medicament to the patient when port **218** is closed, in a flow direction opposite to that indicated by arrow **262**.

FIGS. **29**C and **30**C illustrate a third operating position of the stopcock of FIG. **21**, which is typically employed for supplying a liquid to the patient from port **218** to port **214**. Liquid flows via port **218** and partially peripherally-extending recess **252**, around fluid flow guide **254**, and into the internal volume **227** of port **216** as well as an internal volume **266** of the elastomeric element **223**, flushing residual liquid therefrom, via port **214** to the patient, as indicated by an arrow **264**.

It is a particular feature of the present invention that the provision of fluid flow guide **254** generally overcomes problems of the presence of residual liquids remaining in the internal volume **227** of port **216** as well as in internal volume **266** of the elastomeric element **223**. This is important in various therapeutic situations. For example when blood is drawn from the patient through port **216**, there remains residual blood in the internal volumes **227** of port **216** and **266** of the elastomeric element **223**. This blood, if left in internal volumes **227** and **266** for a period of time, can clot and thus become dangerous if delivered to the patient. In addition, the coagulated blood could occlude the liquid passageway extending through port **216**. Various infections could possibly arise as a result of the retained blood.

This feature is also useful when a medicament is supplied to a patient through port **216**. If a portion of the medicament remains in the internal volumes **227** of port **216** and **266** of the elastomeric element **223**, the dosage of the medicament that the patient receives is less than the intended dosage by an amount which cannot be readily ascertained. In addition, this residual medicament might be inadvertently supplied to the patient during a subsequent use of the stopcock, which could cause harm to the patient.

The present invention provides for automatic flushing of the liquid, such as blood or medicament from the internal volumes **227** and **266** and typically returning it to the patient without requiring the use of extra syringes and the opening of the medical set to the atmosphere, thereby increasing the chance of contamination.

FIGS. **29**D and **30**D illustrate a fourth operating position of the stopcock of FIG. **21**, which may be used for flushing the IV set upstream of the stopcock, when port **216** is open to the atmosphere as by insertion of a male luer connector, such as a syringe tip (not shown), into the elastomeric element **223** of the valve thereof. The insertion of the male luer connector activates the flow of liquid from port **218**, around fluid flow guide **254** and through partially peripherally-extending recess **252**, to the male luer connector via the elastomeric element **223** of port **216**, as indicated by an arrow **265**. Alternatively, this operating position may be employed for pushing liquid via the side port **216**, through port **218**, in a direction opposite arrow **265** for uses such as mixing liquid in the pressure bag.

Reference is now made to FIG. **31**, which is an exploded view illustration of a stopcock constructed and operative in accordance with a preferred embodiment of the present invention. As seen in FIG. **31**, the stopcock comprises a housing element **310** including a main tubular portion **312** and three side ports, designated by reference numerals **314**, **316** and **318** respectively. A handle element **320** is arranged to be seated within main tubular portion **312** of housing element **310**.

Reference is now made additionally to FIGS. **32** and **33** which are pictorial illustrations of housing element **310** and to FIGS. **34**A and **34**B which are sectional illustrations thereof. As seen in FIGS. **31**-**34**B, tubular portion **312** of housing element **310** is generally cylindrical, arranged about an axis **322**, and has side ports **314**, **316** and **318** extending in different directions therefrom, typically separated by 90 degrees about axis **322**. Port **314** is preferably a male port which preferably meets luer standard ISO 594-1, while port **316** incorporates a normally closed swabbable valve which is configured to receive a male luer and port **318** is preferably a female port, which preferably meets luer standard ISO 594-1. Conventional plugs, nuts and covers may be used in association with ports **314** and **318**.

Port **316** of housing element **310** includes a valve employing an elastomeric element **323** held in place by a cap **324**, which is welded or otherwise fixed to housing element **310**. Elastomeric element **323** and cap **324** are commercially available from Halkey-Roberts Corporation of St. Petersburg, Fla., USA and described in one or more of U.S. Pat. Nos. 6,651,956; 6,089,541 and 6,036,171, the disclosures of which are hereby incorporated by reference. Alternatively valves and valve elements commercially available from other sources such as Becton-Dickinson, Cardinal, Medegen and Filtertek may be employed.

Tubular portion **312** includes a central bore **325** having a slightly conical configuration, which is formed with a circumferential undercut **326**. In this embodiment, a side recess **327** is formed in a wall of bore **325** opposite port **316**. Port **316** defines an internal volume **328**.

Reference is now made to FIGS. **35**A-**38**B, which illustrate handle element **320**. As seen in FIGS. **35**A-**38**B, the handle element includes a shaft portion **330**, which is integrally formed with a top portion **332** from which extends a finger-engageable protrusion **334**. It is appreciated that any other suitable general configuration of the top portion of the handle element may alternatively be employed.

Shaft portion **330** is generally symmetrical about a shaft axis **342** and has a slightly conical outer surface **344**, typically having an angle α (as seen particularly in FIG. **36**A) of 3-4 degrees, which corresponds to the slightly conical configuration of central bore **325** for rotatable sealing engagement therewith. As seen particularly in FIGS. **38**A and **38**B, shaft portion **330** is typically formed with mutually sealed top and bottom cylindrical recesses **346** and **348**, which are sealingly separated by a divider **350**.

Disposed generally between recesses **346** and **348** and sealed therefrom is a partially peripherally-extending recess **352**. Preferably extending radially and partially bifurcating the recess **352** is a fluid flow guide **354**, which directs the flow of liquid between ports **314** and **318** through the passageway defined by recess **352** into the internal volume **328** of port **316** for flushing thereof, when the handle element **320** is suitably positioned. The thickness of fluid flow guide **354** is substantially less than the circumferential extent of side recess **327**. The radially outward facing edge **356** of fluid flow guide **354** is formed with a suitably tapered configuration in order to prevent liquid flow therepast when fluid flow guide **354** is not located opposite a port.

Reference is now made to FIGS. **39**A, **39**B, **39**C and **39**D, which are simplified pictorial illustrations of the stopcock of FIG. **31** in four operative orientations and to FIGS. **40**A, **40**B, **40**C and **40**D, which are sectional illustrations of the stopcock of FIGS. **39**A, **39**B, **39**C and **39**D, respectively.

FIGS. **39**A and **40**A illustrate a first operating position of the stopcock of FIG. **31**. The user typically connects a source of pressurized fluid, such as an IV set, to port **318** and the liquid flows from port **318**, around fluid flow guide **354**, through side recess **327** to port **314**, as indicated by arrow **360**.

FIGS. **39**B and **40**B illustrate a second operating position of the stopcock of FIG. **31**, which is typically employed for drawing blood or other fluids from the patient. The user typically connects a syringe to port **316** and draws blood from the patient through port **314** and partially peripherally-extending recess **352** through port **316** to the syringe, as indicated by an arrow **362**. It is appreciated that this operating position may also be used for supplying a medicament to the patient when port **318** is closed, in a flow direction opposite to that indicated by arrow **362**.

FIGS. **39**C and **40**C illustrate a third operating position of the stopcock of FIG. **31**, which is typically employed for supplying a liquid to the patient from port **318** to port **314**. Liquid flows via port **318** and partially peripherally-extending recess **352**, around fluid flow guide **354**, and into the internal volume **328** of port **316** as well as an internal volume **366** of the elastomeric element **323**, flushing residual liquid therefrom, via port **314** to the patient, as indicated by an arrow **364**.

It is a particular feature of the present invention that the provision of fluid flow guide **354** generally overcomes problems of the presence of residual liquids remaining in the internal volume **328** of port **316** as well as in internal volume **366** of the elastomeric element **323**. This is important in various therapeutic situations. For example when blood is drawn from the patient through port **316**, there remains residual blood in the internal volume **328** of port **316** and the internal volume **366** of the elastomeric element **323**. This blood, if left in internal volumes **328** and **366** for a period of time, can clot and thus become dangerous if delivered to the patient. In addition, the coagulated blood could occlude the liquid passageway extending through port **316**. Various infections could possibly arise as a result of the retained blood.

This feature is also useful when a medicament is supplied to a patient through port **316**. If a portion of the medicament remains in the internal volumes **328** of port **316** and **366** of the elastomeric element **323**, the dosage of the medicament that the patient receives is less than the intended dosage by an amount which cannot be readily ascertained. In addition, this residual medicament might be inadvertently supplied to the patient during a subsequent use of the stopcock, which could cause harm to the patient.

The present invention provides for automatic flushing of the liquid, such as blood or medicament, from the internal volumes **328** and **366** and typically returning it to the patient without requiring the use of extra syringes and the opening of the medical set to the atmosphere, thereby increasing the chance of contamination.

FIGS. **39**D and **40**D illustrate a fourth operating position of the stopcock of FIG. **31**, which may be used for flushing the IV set upstream of the stopcock, when port **316** is open to the atmosphere as by insertion of a male luer connector, such as a syringe tip (not shown), into the elastomeric element **323** of the valve thereof. The insertion of the male luer connector activates the flow of liquid from port **318**, around fluid flow guide **354** and through partially peripherally-extending recess **352**, to the male luer connector via the elastomeric element **323** of port **316**, as indicated by an arrow **365**. Alternatively, this operating position may be employed for pushing liquid via the side port **316**, through port **318**, in a direction opposite arrow **365**, for uses such as mixing liquid in the pressure bag.

Reference is now made to FIG. **41**, which is an exploded view illustration of a stopcock constructed and operative in accordance with a preferred embodiment of the present invention. As seen in FIG. **41**, the stopcock comprises a housing element **410** including a main tubular portion **412** and three side ports, designated by reference numerals **414**, **416** and **418** respectively. A handle element **420** is arranged to be seated within main tubular portion **412** of housing element **410**.

Reference is now made additionally to FIGS. **42** and **43** which are pictorial illustrations of housing element **410** and to FIGS. **44**A and **44**B which are sectional illustrations thereof. As seen in FIGS. **41**-**44**B, tubular portion **412** of housing element **410** is generally cylindrical, arranged about an axis **422**, and has side ports **414**, **416** and **418** extending in different directions therefrom, typically separated by 90 degrees about axis **422**. Port **414** is preferably a male port which preferably meets luer standard ISO 594-1, while port **416** incorporates a normally closed swabbable valve which is configured to receive a male luer and port **418** is preferably a female port, which preferably meets luer standard ISO 594-1. Conventional plugs, nuts and covers may be used in association with ports **414** and **418**.

Port **416** of housing element **410** includes a valve employing an elastomeric element **423**, held in place by a cap **424**, which is welded or otherwise fixed to housing element **410**. Elastomeric element **423** and cap **424** are commercially available from Halkey-Roberts Corporation of St. Petersburg, Fla., USA and described in one or more of U.S. Pat. Nos. 6,651,956; 6,089,541 and 6,036,171, the disclosures of which are hereby incorporated by reference. Alternatively, valves and valve elements commercially available from other sources such as Becton-Dickinson, Cardinal, Medegen and Filtertek may be employed.

Tubular portion **412** includes a central bore **425** having a slightly conical configuration, which is formed with a circumferential undercut **426**. Port **416** defines an internal volume **427**.

Reference is now made to FIGS. **45**A-**48**B, which illustrate handle element **420**. As seen in FIGS. **45**A-**48**B, the handle element includes a shaft portion **430**, which is integrally formed with a top portion **432** from which extends a finger-engageable protrusion **434**. It is appreciated that any other suitable general configuration of the top portion of the handle element may alternatively be employed.

Shaft portion **430** is generally symmetrical about a shaft axis **442** and has a slightly conical outer surface **444**, typically having an angle α (as seen particularly in FIG. **46**A) of 3-4 degrees, which corresponds to the slightly conical configuration of central bore **425** for rotatable sealing engagement therewith. As seen particularly in FIGS. **48**A and **48**B, shaft portion **430** is typically formed with mutually sealed top and bottom cylindrical recesses **446** and **448**, which are sealingly separated by a divider **450**.

Disposed generally between recesses **446** and **448** and sealed therefrom is a side-to-side extending bore **452** and a side bore **453** extending perpendicularly with respect thereto and communicating therewith. Bore **452** and side bore **453** are bifurcated by a fluid flow guide **454** in such a manner that fluid communication between opposite ends of bore **452** takes place via side bore **453**. Bores **452** and **453** and fluid flow guide **454** define a fluid flow passageway between selectable ones of side ports **414**, **416** and **418** depending on the rotational orientation of the handle element **420** relative to the housing element **410**. Fluid flow guide **454** directs the flow of liquid between ports **414** and **418** through bores **452** and **453** into the internal volume **427** of port **416** for flushing thereof, when the handle element **420** is suitably positioned. The radially outward facing edge **456** of fluid flow guide **454** is formed with a suitably tapered configuration in order to prevent liquid flow therepast when fluid flow guide **454** is not located opposite a port as shown in FIG. **45**A, alternatively it may have many other shapes.

Reference is now made to FIGS. **49**A, **49**B, **49**C and **49**D, which are simplified pictorial illustrations of the stopcock of FIG. **41** in four operative orientations and to FIGS. **50**A, **50**B, **50**C and **50**D, which are sectional illustrations of the stopcock of FIGS. **49**A, **49**B, **49**C and **49**D, respectively.

FIGS. **49**A and **50**A illustrate a first operating position of the stopcock of FIG. **41**. As seen, there is no fluid communication between any of the ports. Liquid does not flow from port **418** to port **414**, because it is blocked by fluid flow guide **454**, whose edge **456** sealingly engages an inner facing wall **457** of central bore **425** of housing element **410**. This orientation may be utilized to close all three ports.

The operative orientation shown in FIGS. **49**A and **50**A may be advantageously employed when it is desired to prevent all flow of liquid through the stopcock. The procedure currently used requires careful placement of the handle to an angle 45 degrees from one of the ports. Such a procedure is unreliable and requires careful attention of the operator, which may be a doctor or a nurse in the middle of a surgery.

FIGS. **49**B and **50**B illustrate a second operating position of the stopcock of FIG. **41**, which is typically employed for drawing blood or other fluids from the patient. The user typically connects a syringe to port **416** and draws blood from the patient through port **414** and bores **453** and **452** through port **416** to the syringe, as indicated by an arrow **462**. It is appreciated that this operating position may also be used for supplying a medicament to the patient when port **418** is closed, in a flow direction opposite to that indicated by arrow **462**.

FIGS. **49**C and **50**C illustrate a third operating position of the stopcock of FIG. **41**, which is typically employed for supplying a liquid to the patient from port **418** to port **414**. Liquid flows via port **418** and bores **452** and **453**, around fluid flow guide **454**, and into the internal volume **427** of port **416** as well as an internal volume **466** of the elastomeric element **423**, flushing residual liquid therefrom, via port **414** to the patient, as indicated by an arrow **464**.

It is a particular feature of the present invention that the provision of fluid flow guide **454** generally overcomes problems of the presence of residual liquids remaining in the internal volume **427** of port **416** as well as in internal volume **466** of the elastomeric element **423**. This is important in various therapeutic situations. For example when blood is drawn from the patient through port **416**, there remains residual blood in the internal volume **427** of port **416** and the internal volume **466** of the elastomeric element **423**. This blood, if left in internal volumes **427** and **466** for a period of time, can clot and thus become dangerous if delivered to the patient. In addition, the coagulated blood could occlude the liquid passageway extending through port **416**. Various infections could possibly arise as a result of the retained blood.

This feature is also useful when a medicament is supplied to a patient through port **416**. If a portion of the medicament remains in the internal volumes **427** of port **416** and **466** of the elastomeric element **423**, the dosage of the medicament that the patient receives is less than the intended dosage by an amount which cannot be readily ascertained. In addition, this residual medicament might be inadvertently supplied to the patient during a subsequent use of the stopcock, which could cause harm to the patient.

The present invention provides for automatic flushing of the liquid, such as blood or medicament from the internal volumes **427** and **466** and typically returning it to the patient without requiring the use of extra syringes and the opening of the medical set to the atmosphere, thereby increasing the chance of contamination.

FIGS. **49**D and **50**D illustrate a fourth operating position of the stopcock of FIG. **41**, which may be used for flushing the IV set upstream of the stopcock, when port **416** is open to the atmosphere as by insertion of a male luer connector, such as a syringe tip (not shown), into the elastomeric element **423** of the valve thereof. The insertion of the male luer connector activates the flow of liquid from port **418**, around fluid flow guide **454** and through bores **453** and **452**, to the male luer connector via the elastomeric element **423** of port **416**, as indicated by an arrow **465**. Alternatively, this operating position may be employed for pushing liquid via the side port **416**, through port **418**, in a direction opposite arrow **465**, for uses such as mixing liquid in the pressure bag.

Reference is now made to FIG. **51**, which is an exploded view illustration of a stopcock constructed and operative in accordance with a preferred embodiment of the present invention. As seen in FIG. **51**, the stopcock comprises a housing element **510** including a main tubular portion **512** and three side ports, designated by reference numerals **514**, **516** and **518** respectively. A handle element **520** is arranged to be seated within main tubular portion **512** of housing element **510**.

Reference is now made additionally to FIGS. **52** and **53** which are pictorial illustrations of housing element **510** and to FIGS. **54**A and **54**B which are sectional illustrations thereof. As seen in FIGS. **51**-**54**B, tubular portion **512** of housing element **510** is generally cylindrical, arranged about an axis **522**, and has side ports **514**, **516** and **518** extending in different directions therefrom, typically separated by 90 degrees about axis **522**. Port **514** is preferably a male port which preferably meets luer standard ISO 594-1, while port **516** incorporates a normally closed swabbable valve which is configured to receive a male luer and port **518** is preferably a

female port, which preferably meets luer standard ISO 594-1. Conventional plugs, nuts and covers may be used in association with ports **514** and **518**.

Port **516** of housing element **510** includes a valve employing an elastomeric element **523**, held in place by a cap **524**, which is welded or otherwise fixed to housing element **510**. Elastomeric element **523** and cap **524** are commercially available from Halkey-Roberts Corporation of St. Petersburg, Fla., USA and described in one or more of U.S. Pat. Nos. 6,651,956; 6,089,541 and 6,036,171, the disclosures of which are hereby incorporated by reference. Alternatively, valves and valve elements commercially available from other sources such as Becton-Dickinson, Cardinal, Medegen and Filtertek may be employed.

Tubular portion **512** includes a central bore **525** having a slightly conical configuration, which is formed with a circumferential undercut **526**. Between bore **525** and elastomeric element **523**, port **516** is bifurcated by a fluid flow guide **527**. Port **516** defines an internal volume **528**.

Reference is now made to FIGS. **55**A-**58**B, which illustrate handle element **520**. As seen in FIGS. **55**A-**58**B, the handle element includes a shaft portion **530**, which is integrally formed with a top portion **532** from which extends a finger-engageable protrusion **534**. It is appreciated that any other suitable general configuration of the top portion of the handle element may alternatively be employed.

Shaft portion **530** is generally symmetrical about a shaft axis **542** and has a slightly conical outer surface **544**, typically having an angle $\alpha$ (as seen particularly in FIG. **56**A) of 3-4 degrees, which corresponds to the slightly conical configuration of central bore **525** for rotatable sealing engagement therewith. As seen particularly in FIGS. **58**A and **58**B, shaft portion **530** is typically formed with mutually sealed top and bottom cylindrical recesses **546** and **548**, which are sealingly separated by a divider **550**.

Disposed generally between recesses **546** and **548** and sealed therefrom is a partially peripherally-extending recess **552**, selectably defining a fluid flow passageway between selectable ones of side ports **514**, **516** and **518** depending on the rotational orientation of the handle element **520** relative to the housing element **510**. Preferably extending radially and partially bifurcating the recess **552** is a fluid flow guide **554**, which directs the flow of liquid between ports **514** and **518** through the passageway defined by recess **552** into the internal volume **528** of port **516** for flushing thereof, when the handle element **520** is suitably positioned. The radially outward facing edge **556** of fluid flow guide **554** is formed with a suitably tapered configuration in order to prevent liquid flow therepast when fluid flow guide **554** is not located opposite a port as shown in FIG. **55**A, alternatively it may have many other shapes.

Reference is now made to FIGS. **59**A, **59**B, **59**C and **59**D, which are simplified pictorial illustrations of the stopcock of FIG. **51** in four operative orientations and to FIGS. **60**A, **60**B, **60**C and **60**D, which are sectional illustrations of the stopcock of FIGS. **59**A, **59**B, **59**C and **59**D, respectively.

FIGS. **59**A and **60**A illustrate a first operating position of the stopcock of FIG. **51**. As seen, there is no fluid communication between any of the ports. Liquid does not flow from port **518** to port **514**, because it is blocked by fluid flow guide **554**, whose edge **556** sealingly engages an inner facing wall **557** of bore **525** of housing element **510**. This orientation may be utilized to close all three ports.

The operative orientation shown in FIGS. **59**A and **60**A may be advantageously employed when it is desired to prevent all flow of liquid through the stopcock. The procedure currently used requires careful placement of the handle to an angle 45 degrees from one of the ports. Such a procedure is unreliable and requires careful attention of the operator, which may be a doctor or a nurse in the middle of a surgery.

FIGS. **59**B and **60**B illustrate a second operating position of the stopcock of FIG. **51**, which is typically employed for drawing blood or other fluids from the patient. The user typically connects a syringe to port **516** and draws blood from the patient through port **514** and partially peripherally-extending recess **552** through port **516** to the syringe, as indicated by an arrow **562**. It is appreciated that this operating position may also be used for supplying a medicament to the patient when port **518** is closed, in a flow direction opposite to that indicated by arrow **562**.

FIGS. **59**C and **60**C illustrate a third operating position of the stopcock of FIG. **51**, which is typically employed for supplying a liquid to the patient from port **518** to port **514**. Liquid flows via port **518** and partially peripherally-extending recess **552**, along fluid flow guides **554** and **527**, and into the internal volume **528** of port **516** as well as an internal volume **566** of the elastomeric element **523**, flushing residual liquid therefrom, via port **514** to the patient, as indicated by an arrow **564**.

It is a particular feature of the present invention that the provision of fluid flow guides **554** and **527** generally overcomes problems of the presence of residual liquids remaining in the internal volume **528** of port **516** as well as in internal volume **566** of the elastomeric element **523**. This is important in various therapeutic situations. For example when blood is drawn from the patient through port **516**, there remains residual blood in the internal volume **528** of port **516** and the internal volume **566** of the elastomeric element **523**. This blood, if left in internal volumes **528** and **566** for a period of time, can clot and thus become dangerous if delivered to the patient. In addition, the coagulated blood could occlude the liquid passageway extending through port **516**. Various infections could possibly arise as a result of the retained blood.

This feature is also useful when a medicament is supplied to a patient through port **516**. If a portion of the medicament remains in the internal volumes **528** of port **516** and **566** of the elastomeric element **523**, the dosage of the medicament that the patient receives is less than the intended dosage by an amount which cannot be readily ascertained. In addition, this residual medicament might be inadvertently supplied to the patient during a subsequent use of the stopcock, which could cause harm to the patient.

The present invention provides for automatic flushing of the liquid, such as blood or medicament from the internal volumes **528** and **566** and typically returning it to the patient without requiring the use of extra syringes and the opening of the medical set to the atmosphere, thereby increasing the chance of contamination.

FIGS. **59**D and **60**D illustrate a fourth operating position of the stopcock of FIG. **51**, which may be used for flushing the IV set upstream of the stopcock, when port **516** is open to the atmosphere as by insertion of a male luer connector, such as a syringe tip (not shown), into the elastomeric element **523** of the valve thereof. The insertion of the male luer connector activates the flow of liquid from port **518**, around fluid flow guide **554** and through partially peripherally-extending recess **552**, to the male luer connector via the elastomeric element **523** of port **516**, as indicated by an arrow **565**. Alternatively, this operating position may be employed for pushing liquid via the side port **516**, through port **518**, in a direction opposite arrow **565**, for uses such as mixing liquid in the pressure bag.

Reference is now made to FIGS. **61**A, **61**B and **61**C, which are simplified pictorial illustrations of an arterial monitoring

set constructed and operative in accordance with a preferred embodiment of the present invention in various operative orientations. The arterial monitoring set includes a fluid-filled bag **612** and a tube portion **614** leading to a patient's artery. An arterial pressure sensor **616**, which is schematically depicted in drawings **61**A-**61**C, is coupled in a series along tube portion **614** and provides a visible output on a conventional monitor **618**. Downstream of arterial pressure sensor **616** there is provided a stopcock **620** of the type described hereinabove with reference to any of FIGS. **11**-**60**D, including a swabbable valve **622** having an elastomeric element **623**.

FIG. **61**A shows the stopcock in an operative orientation such as that shown in FIGS. **19**A and **20**A, FIGS. **29**A and **30**A, FIGS. **39**A and **40**A, FIGS. **49**A and **50**A and FIGS. **59**A and **60**A. As shown in FIGS. **19**A, **20**A, **39**A and **40**A, a liquid passes through the arterial set, including stopcock **620**, from the bag **612** to the artery of the patient. Alternatively, as shown in the stopcocks illustrated in FIGS. **29**A, **30**A, **49**A, **50**A, **59**A and **60**A, this operative orientation may be utilized when a medical procedure requires a cessation of the flow of liquid in the arterial set.

FIG. **61**B shows the stopcock in an operative orientation such as that shown in FIGS. **19**B and **20**B, FIGS. **29**B and **30**B, FIGS. **39**B and **40**B, FIGS. **49**B and **50**B and FIGS. **59**B and **60**B, which is typically employed for drawing blood or other fluids from the patient, by employing a syringe **624** coupled to the swabbable valve **622**. It is appreciated that this operating position may also be used for supplying medicament to the patient via syringe **624**.

FIG. **61**C shows the stopcock in an operative orientation such as that shown, for example in FIGS. **19**C and **20**C, FIGS. **29**C and **30**C, FIGS. **39**C and **40**C, FIGS. **49**C and **50**C and FIGS. **59**C and **60**C, which is typically employed for supplying a liquid to the patient from the arterial set. Liquid flows through the stopcock and flushes the internal volume of the swabbable valve and of the port in which it is located, flushing residual liquid therefrom to the patient.

Because it enables an operator to easily draw blood without exposing the arterial line to the atmosphere, use of a stopcock shown in any of FIGS. **11**-**60**D in a monitoring set reduces both the risk of contamination and the need for extra covers or plugs.

For routine use in arterial lines, the stopcock is employed in a position such as that shown in FIGS. **19**A, **20**A, **39**A, **40**A and **61**A, where the fluid flows from the arterial line to the patient without making contact with the elastomeric element **623** of the valve **622**.

To draw blood from the patient, the operator places the handle of the stopcock in the operative orientation shown in FIGS. **19**B, **20**B, **29**B, **30**B, **39**B, **40**B, **49**B, **50**B, **59**B, **60**B and **61**B, introduces a syringe to the valve, thereby opening it, and draws blood.

After blood is drawn, residual blood remains in the internal volumes of the valve and the side port of the stopcock. This residual blood, if not removed from the stopcock, may cause damage to the patient as discussed hereinabove with reference to drawings **9**C, **19**C, **20**C, **29**C, **30**C, **39**C, **40**C, **49**C, **50**C, **59**C and **60**C.

In order to clear the residual blood from the internal volumes, the operator places the handle of the stopcock in the operative orientation shown in FIGS. **19**C, **20**C, **29**C, **30**C, **39**C, **40**C, **49**C, **50**C, **59**C, **60**C and **61**C. In this orientation, the flow of liquid in the arterial line flushes the internal volumes of both the valve and the side port of the stopcock and clears the residual blood therefrom.

For use of the stopcock in monitoring the arterial blood pressure of the patient, the flow of liquid must not come in contact with the elastomeric component of the valve. Therefore, when the operator has removed the residual blood from the internal volumes of the valve and the side port of the stopcock, he would again place the handle of the stopcock in the operative orientation seen in FIG. **61**A.

It is appreciated that the stopcock structure shown and described hereinabove may have many advantageous uses in addition to those described specifically hereinabove.

It will be appreciated by persons skilled in the art that the present invention is not limited to what has been particularly shown and described hereinabove. Rather the scope of the present invention includes both combinations and subcombinations of the various features described hereinabove as well as modifications and variations thereof as would occur to a person of skill in the art upon reading the foregoing specification and which are not in the prior art.

The invention claimed is:

**1**. A stopcock comprising:

a housing element defining a central bore and at least first, second and third ports;

a handle element which is selectably positionable relative to said housing element;

at least one fluid passageway communicating between at least two of said at least first, second and third ports, said at least one fluid passageway being selectably defined by at least one of said housing element and said handle element; and

a fluid flow guide associated with said at least one fluid flow passageway, said fluid flow guide extending radially and partially bifurcating said at least one fluid flow passageway, said fluid flow guide extending radially to an inner facing wall of said central bore,

said at least one fluid passageway being configured for enabling flushing an internal volume of at least one of said first, second and third ports by a fluid flow which does not flow entirely through said port whose internal volume is being flushed,

said at least one fluid passageway being defined by at least one recess formed on a peripheral surface of said handle element.

**2**. A stopcock comprising:

a housing element defining at least first, second and third ports;

a handle element which is selectably positionable relative to said housing element;

at least one fluid passageway communicating between at least two of said at least first, second and third ports, said at least one fluid passageway being selectably defined by at least one of said housing element and said handle element; and

a fluid flow guide associated with said at least one fluid flow passageway,

said fluid flow guide extending radially and partially bifurcating said at least one fluid flow passageway,

said fluid flow guide comprising an outward facing edge adapted to prevent flow of liquid when said fluid flow guide is not located opposite said at least one of said ports,

said handle element and said housing element being arrangeable in multiple mutual positions, and

said fluid flow guide and said at least one fluid passageway being configured for enabling flushing an internal volume of at least one of said first, second and third ports by a fluid flow which does not flow entirely through said port whose internal volume is being flushed when said housing element and said handle element are in at least one of said multiple mutual positions.

* * * * *