US008721714B2

(12) **United States Patent**
Kelley

(10) **Patent No.: US 8,721,714 B2**
(45) **Date of Patent: May 13, 2014**

(54) **DELIVERY SYSTEM FOR DEPLOYMENT OF MEDICAL DEVICES**

(75) Inventor: **Gregory Scott Kelley**, San Diego, CA (US)

(73) Assignee: **Medtronic CoreValve LLC**, Minneapolis, MN (US)

(*) Notice: Subject to any disclaimer, the term of this patent is extended or adjusted under 35 U.S.C. 154(b) by 0 days.

(21) Appl. No.: **12/212,620**

(22) Filed: **Sep. 17, 2008**

(65) **Prior Publication Data**

US 2010/0069852 A1 Mar. 18, 2010

(51) **Int. Cl.**
A61F 2/24 (2006.01)

(52) **U.S. Cl.**
USPC **623/2.11**

(58) **Field of Classification Search**
USPC 623/2.11, 1.11, 1.12, 1.23; 606/108, 606/200.2
See application file for complete search history.

(56) **References Cited**

U.S. PATENT DOCUMENTS

3,334,629	A	8/1967	Cohn
3,409,013	A	11/1968	Berry
3,540,431	A	11/1970	Mobin-Uddin
3,587,115	A	6/1971	Shiley
3,628,535	A	12/1971	Ostrowsky et al.
3,642,004	A	2/1972	Osthagen et al.
3,657,744	A	4/1972	Ersek
3,671,979	A	6/1972	Moulopoulos
3,714,671	A	2/1973	Edwards et al.
3,755,823	A	9/1973	Hancock
3,795,246	A	3/1974	Sturgeon
3,839,741	A	10/1974	Haller
3,868,956	A	3/1975	Alfidi et al.
3,874,388	A	4/1975	King et al.
4,035,849	A	7/1977	Angell et al.
4,056,854	A	11/1977	Boretos et al.
4,106,129	A	8/1978	Carpentier et al.
4,222,126	A	9/1980	Boretos et al.
4,233,690	A	11/1980	Akins
4,265,694	A	5/1981	Boretos
4,291,420	A	9/1981	Reul
4,297,749	A	11/1981	Davis et al.
4,339,831	A	7/1982	Johnson
4,343,048	A	8/1982	Ross et al.
4,345,340	A	8/1982	Rosen
4,425,908	A	1/1984	Simon

(Continued)

FOREIGN PATENT DOCUMENTS

CN	2007-100074433	8/2007
DE	3640745	6/1987

(Continued)

OTHER PUBLICATIONS

U.S. Appl. No. 12/250,163, filed Oct. 13, 2008.

(Continued)

Primary Examiner — Corrine M McDermott
Assistant Examiner — Son Dang

(57) **ABSTRACT**

A catheter that comprises a sheath that is connected at opposing ends to concentric tubes that move relative to each other in a manner that alternatively covers and exposes a medical device loaded onto the catheter. A portion of the sheath is arranged so as to invert upon itself so that axial movement of one tube relative to the other simultaneously moves the inversion point over or away from the device, alternatively covering or exposing the device.

16 Claims, 3 Drawing Sheets

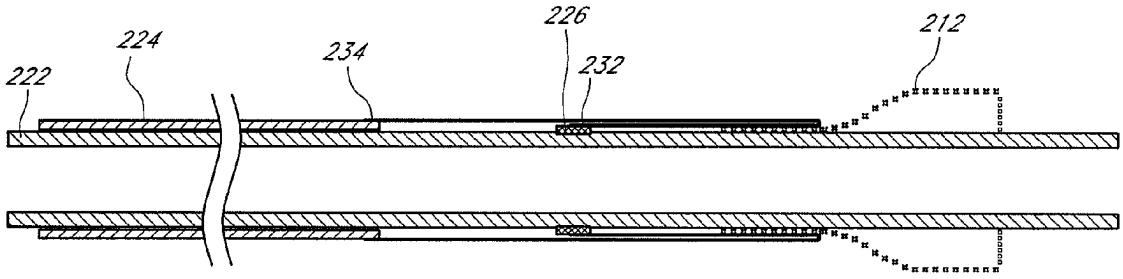

Imperative Care v. Inari Medical
IPR2025-01025
Imperative Care Ex. 1073

(56) **References Cited**

U.S. PATENT DOCUMENTS

4,470,157 A 9/1984 Love
4,501,030 A 2/1985 Lane
4,574,803 A 3/1986 Storz
4,580,568 A 4/1986 Gianturco
4,592,340 A 6/1986 Boyles
4,610,688 A 9/1986 Silvestrini et al.
4,612,011 A 9/1986 Kautzky
4,647,283 A 3/1987 Carpentier et al.
4,648,881 A 3/1987 Carpentier et al.
4,655,771 A 4/1987 Wallsten
4,662,885 A 5/1987 DiPisa, Jr.
4,665,906 A 5/1987 Jervis
4,681,908 A 7/1987 Broderick et al.
4,710,192 A 12/1987 Liotta et al.
4,732,152 A * 3/1988 Wallsten et al. 623/1.11
4,733,665 A 3/1988 Palmaz
4,777,951 A 10/1988 Cribier et al.
4,787,899 A 11/1988 Lazarus
4,787,901 A 11/1988 Baykut
4,796,629 A 1/1989 Grayzel
4,819,751 A 4/1989 Shimada et al.
4,834,755 A 5/1989 Silvestrini et al.
4,856,516 A 8/1989 Hillstead
4,872,874 A 10/1989 Taheri
4,878,495 A 11/1989 Grayzel
4,878,906 A 11/1989 Lindemann et al.
4,883,458 A 11/1989 Shiber
4,909,252 A 3/1990 Goldberger
4,917,102 A 4/1990 Miller et al.
4,922,905 A 5/1990 Strecker
4,950,227 A * 8/1990 Savin et al. 623/1.12
4,954,126 A 9/1990 Wallsten
4,966,604 A 10/1990 Reiss
4,979,939 A 12/1990 Shiber
4,986,830 A 1/1991 Owens et al.
4,994,077 A 2/1991 Dobben
5,002,559 A 3/1991 Tower
5,007,896 A 4/1991 Shiber
5,026,366 A 6/1991 Leckrone
5,032,128 A 7/1991 Alonso
5,037,434 A 8/1991 Lane
5,047,041 A 9/1991 Samuels
5,059,177 A 10/1991 Towne et al.
5,061,273 A 10/1991 Yock
5,085,635 A 2/1992 Cragg
5,089,015 A 2/1992 Ross
5,152,771 A 10/1992 Sabbaghian et al.
5,161,547 A 11/1992 Tower
5,163,953 A 11/1992 Vince
5,167,628 A 12/1992 Boyles
5,217,483 A 6/1993 Tower
5,232,445 A 8/1993 Bonzel
5,272,909 A 12/1993 Nguyen et al.
5,295,958 A 3/1994 Shturman
5,327,774 A 7/1994 Nguyen et al.
5,332,402 A 7/1994 Teitelbaum
5,350,398 A 9/1994 Pavcnik et al.
5,370,685 A 12/1994 Stevens
5,389,106 A 2/1995 Tower
5,397,351 A 3/1995 Pavcnik et al.
5,411,552 A 5/1995 Andersen et al.
5,415,633 A 5/1995 Lazarus et al.
5,431,676 A 7/1995 Dubrul et al.
5,443,446 A 8/1995 Shturman
5,449,384 A 9/1995 Johnson
5,480,424 A 1/1996 Cox
5,489,294 A 2/1996 McVenes et al.
5,489,297 A 2/1996 Duran
5,496,346 A 3/1996 Horzewski et al.
5,500,014 A 3/1996 Quijano et al.
5,507,767 A 4/1996 Maeda et al.
5,545,209 A 8/1996 Roberts et al.
5,545,211 A 8/1996 An et al.
5,545,214 A 8/1996 Stevens
5,554,185 A 9/1996 Block et al.
5,575,818 A 11/1996 Pinchuk
5,580,922 A 12/1996 Park et al.
5,591,195 A 1/1997 Taheri et al.
5,609,626 A 3/1997 Quijano et al.
5,645,559 A 7/1997 Hachtman et al.
5,665,115 A 9/1997 Cragg
5,667,523 A 9/1997 Bynon et al.
5,674,277 A 10/1997 Freitag
5,690,644 A * 11/1997 Yurek et al. 623/1.11
5,695,498 A 12/1997 Tower
5,702,368 A 12/1997 Stevens et al.
5,713,953 A 2/1998 Vallana et al.
5,716,417 A 2/1998 Girard et al.
5,746,709 A 5/1998 Rom et al.
5,749,890 A 5/1998 Shaknovich
5,766,151 A 6/1998 Valley et al.
5,782,809 A 7/1998 Umeno et al.
5,800,456 A 9/1998 Maeda et al.
5,800,508 A 9/1998 Goicoechea et al.
5,817,126 A 10/1998 Imran
5,824,041 A 10/1998 Lenker et al.
5,824,043 A 10/1998 Cottone, Jr.
5,824,053 A 10/1998 Khosravi et al.
5,824,056 A 10/1998 Rosenberg
5,824,061 A 10/1998 Quijano et al.
5,824,064 A 10/1998 Taheri
5,840,081 A 11/1998 Andersen et al.
5,843,158 A 12/1998 Lenker et al.
5,851,232 A 12/1998 Lois
5,855,597 A 1/1999 Jayaraman
5,855,601 A 1/1999 Bessler et al.
5,860,996 A 1/1999 Urban et al.
5,861,028 A 1/1999 Angell
5,868,783 A 2/1999 Tower
5,876,448 A 3/1999 Thompson et al.
5,888,201 A 3/1999 Stinson et al.
5,891,191 A 4/1999 Stinson
5,906,619 A 5/1999 Olson et al.
5,907,893 A 6/1999 Zadno-Azizi et al.
5,913,842 A 6/1999 Boyd et al.
5,925,063 A 7/1999 Khosravi
5,944,738 A 8/1999 Amplatz et al.
5,954,766 A 9/1999 Zadno-Azizi et al.
5,957,949 A 9/1999 Leonhardt et al.
5,968,068 A 10/1999 Dehdashtian et al.
5,984,957 A 11/1999 Laptewicz, Jr. et al.
5,997,573 A 12/1999 Quijano et al.
6,022,370 A 2/2000 Tower
6,027,525 A 2/2000 Suh et al.
6,029,671 A 2/2000 Stevens et al.
6,042,589 A 3/2000 Marianne
6,042,598 A 3/2000 Tsugita et al.
6,042,607 A 3/2000 Williamson, IV
6,051,014 A 4/2000 Jang
6,059,809 A 5/2000 Amor et al.
6,110,201 A 8/2000 Quijano et al.
6,146,366 A 11/2000 Schachar
6,159,239 A 12/2000 Greenhalgh
6,162,208 A 12/2000 Hipps
6,162,245 A 12/2000 Jayaraman
6,168,614 B1 1/2001 Andersen et al.
6,171,335 B1 1/2001 Wheatley et al.
6,200,336 B1 3/2001 Pavcnik et al.
6,203,550 B1 3/2001 Olson
6,210,408 B1 4/2001 Chandrasekaran et al.
6,218,662 B1 4/2001 Tchakarov et al.
6,221,006 B1 4/2001 Dubrul et al.
6,221,091 B1 4/2001 Khosravi
6,221,097 B1 * 4/2001 Wang et al. 623/1.11
6,241,757 B1 6/2001 An et al.
6,245,102 B1 6/2001 Jayaraman
6,248,116 B1 6/2001 Chevillon
6,258,114 B1 7/2001 Konya et al.
6,258,115 B1 7/2001 Dubrul
6,258,120 B1 7/2001 McKenzie et al.
6,277,555 B1 8/2001 Duran et al.
6,280,412 B1 * 8/2001 Pederson et al. 604/103.07
6,299,637 B1 10/2001 Shaolia et al.
6,302,906 B1 10/2001 Goicoechea et al.

(56) **References Cited**

U.S. PATENT DOCUMENTS

6,309,382 B1 10/2001 Garrison et al.
6,309,417 B1 10/2001 Spence et al.
6,327,772 B1 12/2001 Zadno-Azizi et al.
6,338,735 B1 1/2002 Stevens
6,348,063 B1 2/2002 Yassour et al.
6,350,277 B1 2/2002 Kocur
6,352,708 B1 3/2002 Duran et al.
6,371,970 B1 4/2002 Khosravi et al.
6,371,983 B1 4/2002 Lane
6,379,383 B1 4/2002 Palmaz et al.
6,380,457 B1 * 4/2002 Yurek et al. 623/1.11
6,398,807 B1 6/2002 Chouinard et al.
6,409,750 B1 6/2002 Hyodoh et al.
6,425,916 B1 7/2002 Garrison et al.
6,432,080 B2 * 8/2002 Pederson et al. 604/103.07
6,440,164 B1 8/2002 DiMatteo et al.
6,443,980 B1 * 9/2002 Wang et al. 623/1.11
6,454,799 B1 9/2002 Schreck
6,458,153 B1 10/2002 Bailey et al.
6,461,382 B1 10/2002 Cao
6,468,303 B1 10/2002 Amplatz et al.
6,475,239 B1 11/2002 Campbell et al.
6,482,228 B1 11/2002 Norred
6,488,704 B1 12/2002 Connelly et al.
6,494,909 B2 12/2002 Greenhalgh
6,503,272 B2 1/2003 Duerig et al.
6,508,833 B2 1/2003 Pavcnik et al.
6,527,800 B1 3/2003 McGuckin, Jr. et al.
6,530,949 B2 3/2003 Konya et al.
6,530,952 B2 3/2003 Vesely
6,547,813 B2 * 4/2003 Stiger et al. 623/1.11
6,562,031 B2 5/2003 Chandrasekaran et al.
6,562,058 B2 5/2003 Seguin et al.
6,569,196 B1 5/2003 Vesely
6,585,758 B1 7/2003 Chouinard et al.
6,592,546 B1 7/2003 Barbut et al.
6,605,112 B1 8/2003 Moll et al.
6,607,552 B1 * 8/2003 Hanson 623/1.11
6,613,077 B2 9/2003 Gilligan et al.
6,622,604 B1 9/2003 Chouinard et al.
6,632,243 B1 10/2003 Zadno-Azizi et al.
6,635,068 B1 10/2003 Dubrul et al.
6,652,571 B1 11/2003 White et al.
6,652,578 B2 11/2003 Bailey et al.
6,656,213 B2 12/2003 Solem
6,663,663 B2 12/2003 Kim et al.
6,669,719 B2 * 12/2003 Wallace et al. 623/1.12
6,669,724 B2 12/2003 Park et al.
6,673,089 B1 1/2004 Yassour et al.
6,673,109 B2 1/2004 Cox
6,676,698 B2 1/2004 McGuckin, Jr. et al.
6,682,558 B2 1/2004 Tu et al.
6,682,559 B2 1/2004 Myers et al.
6,685,739 B2 2/2004 DiMatteo et al.
6,689,144 B2 2/2004 Gerberding
6,689,164 B1 2/2004 Seguin
6,692,512 B2 2/2004 Jang
6,692,513 B2 2/2004 Streeter et al.
6,695,878 B2 2/2004 McGuckin, Jr. et al.
6,702,851 B1 3/2004 Chinn et al.
6,719,789 B2 4/2004 Cox
6,730,118 B2 5/2004 Spenser et al.
6,730,377 B2 5/2004 Wang
6,733,525 B2 5/2004 Yang et al.
6,736,846 B2 5/2004 Cox
6,752,828 B2 6/2004 Thornton
6,758,855 B2 7/2004 Fulton, III et al.
6,769,434 B2 8/2004 Liddicoat et al.
6,786,925 B1 9/2004 Buchanan et al.
6,790,229 B1 9/2004 Berreklouw
6,792,979 B2 9/2004 Konya et al.
6,797,002 B2 9/2004 Spence
6,821,297 B2 11/2004 Snyders
6,830,575 B2 12/2004 Stenzel et al.
6,830,584 B1 12/2004 Seguin
6,830,585 B1 12/2004 Artof
6,846,325 B2 1/2005 Liddicoat
6,866,650 B2 3/2005 Stevens
6,872,223 B2 3/2005 Roberts
6,875,231 B2 4/2005 Anduiza et al.
6,883,522 B2 4/2005 Spence et al.
6,887,266 B2 5/2005 Williams et al.
6,890,330 B2 5/2005 Streeter et al.
6,893,460 B2 5/2005 Spenser et al.
6,896,690 B1 5/2005 Lambrecht et al.
6,908,481 B2 6/2005 Cribier
6,913,600 B2 7/2005 Valley et al.
6,929,653 B2 8/2005 Streeter
6,936,066 B2 8/2005 Palmaz et al.
6,939,365 B1 9/2005 Fogarty et al.
6,949,121 B1 * 9/2005 Laguna 623/1.35
6,951,571 B1 10/2005 Srivastava
6,974,474 B2 12/2005 Pavcnik et al.
6,974,476 B2 12/2005 McGuckin et al.
6,986,742 B2 1/2006 Hart et al.
6,989,027 B2 1/2006 Allen et al.
6,989,028 B2 1/2006 Lashinski et al.
6,991,649 B2 1/2006 Sievers
7,018,401 B1 3/2006 Hyodoh et al.
7,041,128 B2 5/2006 McGuckin, Jr. et al.
7,044,966 B2 5/2006 Svanidze et al.
7,048,014 B2 5/2006 Hyodoh et al.
7,097,659 B2 8/2006 Woolfson et al.
7,101,396 B2 9/2006 Artof et al.
7,105,016 B2 9/2006 Shui et al.
7,115,141 B2 10/2006 Menz et al.
7,128,759 B2 10/2006 Osborne et al.
7,147,663 B1 12/2006 Berg et al.
7,153,324 B2 12/2006 Case et al.
7,160,319 B2 1/2007 Chouinard et al.
7,175,656 B2 2/2007 Khairkhahan
7,186,265 B2 3/2007 Sharkawy et al.
7,195,641 B2 3/2007 Palmaz et al.
7,198,646 B2 4/2007 Figulla et al.
7,201,761 B2 4/2007 Woolfson et al.
7,201,770 B2 * 4/2007 Johnson et al. 623/1.12
7,201,772 B2 4/2007 Schwammenthal et al.
7,252,682 B2 8/2007 Seguin
7,300,457 B2 11/2007 Palmaz
7,300,463 B2 11/2007 Liddicoat
7,316,706 B2 1/2008 Bloom et al.
7,329,278 B2 2/2008 Seguin
7,335,218 B2 2/2008 Wilson et al.
7,338,520 B2 3/2008 Bailey et al.
7,374,571 B2 5/2008 Pease et al.
7,377,938 B2 5/2008 Sarac et al.
7,381,218 B2 6/2008 Shreck
7,384,411 B1 6/2008 Condado
7,429,269 B2 9/2008 Schwammenthal et al.
7,442,204 B2 10/2008 Schwammenthal et al.
7,462,191 B2 12/2008 Spenser et al.
7,470,284 B2 12/2008 Lambrecht et al.
7,481,838 B2 1/2009 Carpentier et al.
7,544,206 B2 6/2009 Cohn et al.
7,556,646 B2 7/2009 Yang et al.
2001/0001314 A1 5/2001 Davison et al.
2001/0002445 A1 5/2001 Vesely
2001/0007956 A1 7/2001 Letac et al.
2001/0010017 A1 7/2001 Letac et al.
2001/0011189 A1 8/2001 Drasler et al.
2001/0021872 A1 9/2001 Bailey et al.
2001/0025196 A1 9/2001 Chinn et al.
2001/0032013 A1 10/2001 Marton
2001/0039450 A1 11/2001 Pavcnik et al.
2001/0041928 A1 11/2001 Pavcnik et al.
2001/0044647 A1 11/2001 Pinchuk et al.
2002/0007192 A1 * 1/2002 Pederson et al. 606/192
2002/0010508 A1 1/2002 Chobotov
2002/0029014 A1 3/2002 Jayaraman
2002/0032480 A1 3/2002 Spence et al.
2002/0032481 A1 3/2002 Gabbay
2002/0035396 A1 3/2002 Heath
2002/0042650 A1 4/2002 Vardi et al.
2002/0052651 A1 5/2002 Myers et al.

(56) **References Cited**

U.S. PATENT DOCUMENTS

2002/0058995 A1 5/2002 Stevens
2002/0072789 A1 6/2002 Hackett et al.
2002/0077696 A1 6/2002 Zadno-Azizi et al.
2002/0095209 A1 7/2002 Zadno-Azizi et al.
2002/0099439 A1 7/2002 Schwartz et al.
2002/0103533 A1 8/2002 Langberg et al.
2002/0107565 A1 8/2002 Greenhalgh
2002/0111674 A1 8/2002 Chouinard et al.
2002/0123802 A1 9/2002 Snyders
2002/0133183 A1 9/2002 Lentz et al.
2002/0138138 A1 9/2002 Yang
2002/0151970 A1 10/2002 Garrison et al.
2002/0161392 A1 10/2002 Dubrul
2002/0161394 A1 10/2002 Macoviak et al.
2002/0193871 A1 12/2002 Beyersdorf et al.
2003/0014104 A1 1/2003 Cribier
2003/0023300 A1 1/2003 Bailey et al.
2003/0023303 A1 1/2003 Palmaz et al.
2003/0028247 A1 2/2003 Cali
2003/0033000 A1* 2/2003 DiCaprio et al. 623/1.11
2003/0036791 A1 2/2003 Philipp et al.
2003/0040771 A1 2/2003 Hyodoh et al.
2003/0040772 A1 2/2003 Hyodoh et al.
2003/0040792 A1 2/2003 Gabbay
2003/0050694 A1 3/2003 Yang et al.
2003/0055495 A1 3/2003 Pease et al.
2003/0065386 A1 4/2003 Weadock
2003/0069492 A1 4/2003 Abrams et al.
2003/0109924 A1 6/2003 Cribier
2003/0125795 A1 7/2003 Pavcnik et al.
2003/0130726 A1 7/2003 Thorpe et al.
2003/0130729 A1* 7/2003 Paniagua et al. 623/2.11
2003/0139804 A1 7/2003 Hankh et al.
2003/0149475 A1 8/2003 Hyodoh et al.
2003/0149476 A1 8/2003 Damm et al.
2003/0149478 A1 8/2003 Figulla et al.
2003/0153974 A1 8/2003 Spenser et al.
2003/0181850 A1 9/2003 Diamond et al.
2003/0191519 A1 10/2003 Lombardi et al.
2003/0199913 A1 10/2003 Dubrul et al.
2003/0199963 A1 10/2003 Tower et al.
2003/0199971 A1 10/2003 Tower et al.
2003/0199972 A1 10/2003 Zadno-Azizi et al.
2003/0212410 A1 11/2003 Stenzel et al.
2003/0212452 A1 11/2003 Zadno-Azizi et al.
2003/0212454 A1 11/2003 Scott et al.
2003/0225445 A1 12/2003 Derus et al.
2004/0019374 A1 1/2004 Hojeibane et al.
2004/0034411 A1 2/2004 Quijano et al.
2004/0039436 A1 2/2004 Spenser et al.
2004/0049224 A1 3/2004 Buehlmann et al.
2004/0049262 A1 3/2004 Obermiller et al.
2004/0049266 A1 3/2004 Anduiza et al.
2004/0082904 A1 4/2004 Houde et al.
2004/0088045 A1 5/2004 Cox
2004/0092858 A1 5/2004 Wilson et al.
2004/0092989 A1 5/2004 Wilson et al.
2004/0093005 A1 5/2004 Durcan
2004/0093060 A1 5/2004 Seguin et al.
2004/0093075 A1* 5/2004 Kuehne 623/1.15
2004/0097788 A1 5/2004 Mourles et al.
2004/0098112 A1 5/2004 DiMatteo et al.
2004/0106976 A1 6/2004 Bailey et al.
2004/0106990 A1 6/2004 Spence et al.
2004/0111096 A1 6/2004 Tu et al.
2004/0116951 A1 6/2004 Rosengart
2004/0117004 A1 6/2004 Osborne et al.
2004/0122468 A1 6/2004 Yodfat et al.
2004/0122514 A1 6/2004 Fogarty et al.
2004/0122516 A1 6/2004 Fogarty
2004/0127979 A1 7/2004 Wilson
2004/0138742 A1 7/2004 Myers et al.
2004/0138743 A1 7/2004 Myers et al.
2004/0153146 A1 8/2004 Lashinski et al.
2004/0167573 A1 8/2004 Williamson
2004/0167620 A1 8/2004 Ortiz
2004/0186563 A1 9/2004 Lobbi
2004/0193261 A1 9/2004 Berreklouw
2004/0210240 A1 10/2004 Saint
2004/0210304 A1 10/2004 Seguin et al.
2004/0210307 A1 10/2004 Khairkhahan
2004/0215333 A1 10/2004 Duran
2004/0215339 A1 10/2004 Drasler et al.
2004/0225353 A1 11/2004 McGuckin, Jr.
2004/0225354 A1 11/2004 Allen
2004/0254636 A1 12/2004 Flagle et al.
2004/0260389 A1 12/2004 Case et al.
2004/0260394 A1 12/2004 Douk et al.
2004/0267357 A1 12/2004 Allen et al.
2005/0010246 A1 1/2005 Streeter
2005/0010285 A1 1/2005 Lambrecht et al.
2005/0010287 A1 1/2005 Macoviak
2005/0015112 A1 1/2005 Cohn et al.
2005/0027348 A1 2/2005 Case et al.
2005/0033398 A1 2/2005 Seguin
2005/0043790 A1 2/2005 Seguin
2005/0049692 A1 3/2005 Numamoto
2005/0049696 A1 3/2005 Siess
2005/0055088 A1 3/2005 Liddicoat et al.
2005/0059990 A1* 3/2005 Ayala et al. 606/192
2005/0060029 A1 3/2005 Le
2005/0060030 A1 3/2005 Lashinski et al.
2005/0075584 A1 4/2005 Cali
2005/0075712 A1 4/2005 Biancucci
2005/0075717 A1 4/2005 Nguyen
2005/0075719 A1 4/2005 Bergheim
2005/0075724 A1 4/2005 Svanidze
2005/0075727 A1 4/2005 Wheatley
2005/0075730 A1 4/2005 Myers
2005/0075731 A1 4/2005 Artof
2005/0085841 A1 4/2005 Eversull et al.
2005/0085842 A1 4/2005 Eversull et al.
2005/0085843 A1 4/2005 Opolski et al.
2005/0085890 A1 4/2005 Rasmussen et al.
2005/0085900 A1 4/2005 Case et al.
2005/0096568 A1 5/2005 Kato
2005/0096692 A1 5/2005 Linder et al.
2005/0096724 A1 5/2005 Stenzel et al.
2005/0096734 A1 5/2005 Majercak et al.
2005/0096735 A1 5/2005 Hojeibane et al.
2005/0096736 A1 5/2005 Osse et al.
2005/0096738 A1 5/2005 Cali et al.
2005/0107871 A1 5/2005 Realyvasquez et al.
2005/0113910 A1 5/2005 Paniagua
2005/0119688 A1 6/2005 Bergheim
2005/0131438 A1 6/2005 Cohn
2005/0137686 A1 6/2005 Salahieh
2005/0137688 A1 6/2005 Salahieh et al.
2005/0137692 A1 6/2005 Haug
2005/0137695 A1 6/2005 Salahieh
2005/0137701 A1 6/2005 Salahieh
2005/0143807 A1 6/2005 Pavcnik et al.
2005/0143809 A1 6/2005 Salahieh
2005/0148997 A1 7/2005 Valley et al.
2005/0149181 A1 7/2005 Eberhardt
2005/0165477 A1 7/2005 Anduiza et al.
2005/0187616 A1 8/2005 Realyvasquez
2005/0197695 A1 9/2005 Stacchino et al.
2005/0203549 A1 9/2005 Realyvasquez
2005/0203605 A1 9/2005 Dolan
2005/0203618 A1 9/2005 Sharkawy
2005/0222674 A1 10/2005 Paine
2005/0228495 A1 10/2005 Macoviak
2005/0234546 A1 10/2005 Nugent
2005/0240200 A1 10/2005 Bergheim
2005/0240263 A1 10/2005 Fogarty et al.
2005/0261759 A1 11/2005 Lambrecht et al.
2005/0283962 A1 12/2005 Boudjemline
2006/0004439 A1 1/2006 Spenser et al.
2006/0004469 A1 1/2006 Sokel
2006/0009841 A1 1/2006 McGuckin et al.
2006/0025844 A1* 2/2006 Majercak et al. 623/1.11
2006/0052867 A1 3/2006 Revuelta et al.
2006/0058775 A1 3/2006 Stevens et al.

(56) **References Cited**

U.S. PATENT DOCUMENTS

2006/0089711	A1	4/2006	Dolan
2006/0100685	A1	5/2006	Seguin et al.
2006/0116757	A1	6/2006	Lashinski et al.
2006/0135964	A1	6/2006	Vesely
2006/0142848	A1	6/2006	Gabbay
2006/0167474	A1	7/2006	Bloom et al.
2006/0178740	A1	8/2006	Stacchino et al.
2006/0195134	A1	8/2006	Crittenden
2006/0200221	A1*	9/2006	Malewicz 623/1.11
2006/0206192	A1	9/2006	Tower et al.
2006/0206202	A1	9/2006	Bonhoeffer et al.
2006/0212111	A1	9/2006	Case et al.
2006/0247763	A1	11/2006	Slater
2006/0259134	A1	11/2006	Schwammenthal et al.
2006/0259136	A1	11/2006	Nguyen et al.
2006/0259137	A1	11/2006	Artof et al.
2006/0265056	A1	11/2006	Nguyen et al.
2006/0271166	A1	11/2006	Thill et al.
2006/0271175	A1	11/2006	Woolfson et al.
2006/0276874	A1	12/2006	Wilson et al.
2006/0276882	A1	12/2006	Case et al.
2006/0282161	A1	12/2006	Huynh et al.
2007/0005129	A1	1/2007	Damm et al.
2007/0005131	A1	1/2007	Taylor
2007/0010878	A1	1/2007	Raffiee et al.
2007/0016286	A1	1/2007	Herrmann et al.
2007/0027518	A1	2/2007	Case et al.
2007/0027533	A1	2/2007	Douk
2007/0038295	A1	2/2007	Case et al.
2007/0043431	A1	2/2007	Melsheimer
2007/0043435	A1	2/2007	Seguin et al.
2007/0051377	A1	3/2007	Douk et al.
2007/0073392	A1	3/2007	Heyninck-Janitz
2007/0078509	A1	4/2007	Lotfy et al.
2007/0078510	A1	4/2007	Ryan
2007/0088431	A1	4/2007	Bourang et al.
2007/0093869	A1	4/2007	Bloom et al.
2007/0100439	A1	5/2007	Cangialosi
2007/0100440	A1	5/2007	Figulla
2007/0100449	A1	5/2007	O'Neil et al.
2007/0112415	A1	5/2007	Bartlett
2007/0162102	A1	7/2007	Ryan et al.
2007/0162113	A1	7/2007	Sharkawy et al.
2007/0185513	A1	8/2007	Woolfson et al.
2007/0203391	A1	8/2007	Bloom et al.
2007/0225681	A1	9/2007	House
2007/0232898	A1	10/2007	Huynh et al.
2007/0233228	A1	10/2007	Eberhardt et al.
2007/0233237	A1	10/2007	Krivoruchko
2007/0233238	A1	10/2007	Huynh et al.
2007/0238979	A1	10/2007	Huynh et al.
2007/0239254	A1	10/2007	Marchand et al.
2007/0239265	A1	10/2007	Birdsall
2007/0239266	A1	10/2007	Birdsall
2007/0239269	A1	10/2007	Dolan et al.
2007/0239273	A1	10/2007	Allen
2007/0244544	A1	10/2007	Birdsall et al.
2007/0244545	A1	10/2007	Birdsall et al.
2007/0244546	A1	10/2007	Francis
2007/0244553	A1	10/2007	Rafiee et al.
2007/0244554	A1	10/2007	Rafiee et al.
2007/0244555	A1	10/2007	Rafiee et al.
2007/0244556	A1	10/2007	Rafiee et al.
2007/0244557	A1	10/2007	Rafiee et al.
2007/0250160	A1	10/2007	Rafiee
2007/0255394	A1	11/2007	Ryan
2007/0255396	A1	11/2007	Douk et al.
2007/0288000	A1	12/2007	Bonan
2008/0004696	A1	1/2008	Vesely
2008/0009940	A1	1/2008	Cribier
2008/0015671	A1	1/2008	Bonhoeffer
2008/0021552	A1	1/2008	Gabbay
2008/0048656	A1	2/2008	Tan
2008/0065011	A1	3/2008	Marchand et al.
2008/0065206	A1	3/2008	Liddicoat
2008/0071361	A1	3/2008	Tuval et al.
2008/0071362	A1	3/2008	Tuval et al.
2008/0071363	A1	3/2008	Tuval et al.
2008/0071366	A1	3/2008	Tuval et al.
2008/0071368	A1	3/2008	Tuval et al.
2008/0077234	A1	3/2008	Styrc
2008/0082165	A1	4/2008	Wilson et al.
2008/0082166	A1	4/2008	Styrc et al.
2008/0133003	A1	6/2008	Seguin et al.
2008/0140189	A1	6/2008	Nguyen et al.
2008/0147105	A1	6/2008	Wilson et al.
2008/0147180	A1	6/2008	Ghione et al.
2008/0147181	A1	6/2008	Ghione et al.
2008/0147182	A1	6/2008	Righini et al.
2008/0154355	A1	6/2008	Benichow et al.
2008/0154356	A1	6/2008	Obermiller et al.
2008/0161910	A1	7/2008	Revuelta et al.
2008/0161911	A1	7/2008	Revuelta et al.
2008/0183273	A1	7/2008	Mesana et al.
2008/0188928	A1	8/2008	Salahieh et al.
2008/0215143	A1	9/2008	Seguin et al.
2008/0215144	A1	9/2008	Ryan et al.
2008/0228254	A1	9/2008	Ryan
2008/0228263	A1	9/2008	Ryan
2008/0234797	A1	9/2008	Styrc
2008/0243246	A1	10/2008	Ryan et al.
2008/0255651	A1	10/2008	Dwork
2008/0255660	A1	10/2008	Guyenot et al.
2008/0255661	A1	10/2008	Straubinger et al.
2008/0262593	A1	10/2008	Ryan et al.
2008/0269878	A1	10/2008	Iobbi
2009/0005863	A1	1/2009	Goetz et al.
2009/0012600	A1	1/2009	Styrc et al.
2009/0048656	A1	2/2009	Wen
2009/0054976	A1	2/2009	Tuval et al.
2009/0069886	A1	3/2009	Suri et al.
2009/0069887	A1	3/2009	Righini et al.
2009/0069889	A1	3/2009	Suri et al.
2009/0085900	A1	4/2009	Weiner
2009/0099653	A1	4/2009	Suri et al.
2009/0138079	A1	5/2009	Tuval et al.
2009/0164004	A1	6/2009	Cohn
2009/0171447	A1	7/2009	Von Segesser et al.
2009/0192585	A1	7/2009	Bloom et al.
2009/0192586	A1	7/2009	Tabor et al.
2009/0192591	A1	7/2009	Ryan et al.
2009/0198316	A1	8/2009	Laske et al.
2009/0216310	A1	8/2009	Straubinger et al.
2009/0216312	A1	8/2009	Straubinger et al.
2009/0216313	A1	8/2009	Straubinger et al.
2009/0234443	A1	9/2009	Ottma et al.
2009/0240264	A1	9/2009	Tuval et al.
2009/0240320	A1	9/2009	Tuval
2009/0281619	A1	11/2009	Le et al.
2009/0287296	A1	11/2009	Manasse
2010/0036479	A1	2/2010	Hill et al.
2010/0094411	A1	4/2010	Tuval et al.
2010/0100167	A1	4/2010	Bortlein et al.
2010/0131054	A1	5/2010	Tuval et al.
2010/0137979	A1	6/2010	Tuval et al.
2010/0161045	A1	6/2010	Righini
2010/0234940	A1	9/2010	Dolan

FOREIGN PATENT DOCUMENTS

DE	195 32 846	3/1997
DE	195 46 692 A1	6/1997
DE	195 46 692 C2	6/1997
DE	198 57 887 A1	7/2000
DE	199 07 646	8/2000
DE	100 48 814	9/2000
DE	100 49 812	4/2002
DE	100 49 813	4/2002
DE	100 49 815	4/2002
EP	0103546	3/1984
EP	0597967	12/1994
EP	0850607	7/1998
EP	1057459 A1	6/2000
EP	1057460 A1	6/2000

(56) **References Cited**

FOREIGN PATENT DOCUMENTS

EP	1088529	4/2001
EP	1255510	11/2002
EP	0937439 B1	9/2003
EP	1340473	9/2003
EP	0819013	6/2004
EP	1469797	11/2005
FR	2788217	12/1999
FR	2815844	5/2000
GB	2056023	3/1981
GB	2433700	12/2007
SU	1271508	11/1986
WO	91/17720	11/1991
WO	93/01768	2/1993
WO	95/29640	11/1995
WO	98/14137	4/1998
WO	98/29057	7/1998
WO	99/33414	7/1999
WO	00/41652	7/2000
WO	00/44313	8/2000
WO	00/47136	8/2000
WO	00/47139	8/2000
WO	01/35870	5/2001
WO	01/49213	7/2001
WO	01/54625	8/2001
WO	01/62189	8/2001
WO	01/64137	9/2001
WO	01/76510	10/2001
WO	02/22054	3/2002
WO	02/36048	5/2002
WO	02/41789	5/2002
WO	02/43620	6/2002
WO	02/47575	6/2002
WO	02/49540	6/2002
WO	03/003943	1/2003
WO	03/003949	1/2003
WO	03/011195	2/2003
WO	03/030776	4/2003
WO	2004/019811	3/2004
WO	2004/019825	3/2004
WO	2004/023980	3/2004
WO	2004/041126	5/2004
WO	2004/058106	7/2004
WO	2004/089250	10/2004
WO	2005/004753	1/2005
WO	2005/027790	3/2005
WO	2005/046528	5/2005
WO	2006/026371	3/2006
WO	2008/047354	4/2008
WO	2008/100599	8/2008
WO	2008/138584	11/2008
WO	2008/150529	12/2008
WO	2009/002548	12/2008
WO	2009/029199	3/2009
WO	2009/042196	4/2009
WO	2009/045338	4/2009
WO	2009/061389	5/2009
WO	2009/091509	7/2009
WO	2009/111241	9/2009

OTHER PUBLICATIONS

U.S. Appl. No. 61/192,199, filed Sep. 15, 2008.
U.S. Appl. No. 12/253,858, filed Oct. 17, 2008.
U.S. Appl. No. 12/596,343, filed Apr. 14, 2008.
U.S. Appl. No. 61/129,170, filed Jun. 9, 2008.
Niethspach et al., "Current Balloon-Expandable Transcatheter Heart Valve and Delivery Systems," Catheterization and Cardiovascular Interventions, 2009, p. 1-6.
Andersen, H.R. et al, "Transluminal implantation of artificial heart valves. Description of a new expandable aortic valve and initial results with implantation by catheter technique in closed chest pigs." Euro. Heart J. (1992) 13:704-708.
Babaliaros, et al., "State of the Art Percutaneous Intervention for the Treatment of Valvular Heart Disease: A Review of the Current Technologies and Ongoing Research in the Field of Percutaneous Heart Valve Replacement and Repair," Cardiology 2007; 107:87-96.
Bailey, "Percutaneous Expandable Prosthetic Valves," In: Topol EJ, ed. Textbook of Interventional Cardiology. vol. II. Second edition. WB Saunders, Philadelphia, 1994:1268-1276.
Block, et al., "Percutaneous Approaches to Valvular Heart Disease," Current Cardiology Reports, vol. 7 (2005) pp. 108-113.
Bonhoeffer, et al, "Percutaneous Insertion of the Pulmonary Valve," Journal of the American College of Cardiology (United States), May 15, 2002, pp. 1664-1669.
Bonhoeffer, et al, "Percutaneous Mitral Valve Dilatation with the Multi-Track System," Catheterization and Cardiovascular Interventions—Official Journal of the Society for Cardiac Angiography & Interventions (United States), Oct. 1999, pp. 178-183.
Bonhoeffer, et al, "Percutaneous Replacement of Pulmonary Valve in a Right-Ventricle to Pulmonary-Artery Prosthetic Conduit with Valve Dysfunction," Lancet (England), Oct. 21, 2000, pp. 1403-1405.
Bonhoeffer, et al, "Transcatheter Implantation of a Bovine Valve in Pulmonary Position: A Lamb Study," Circulation (United States), Aug. 15, 2000, pp. 813-816.
Boudjemline, et al, "Images in Cardiovascular Medicine. Percutaneous Aortic Valve Replacement in Animals," Circulation (United States), Mar. 16, 2004, 109, p. e161.
Boudjemline, et al, "Is Percutaneous Implantation of a Bovine Venous Valve in the Inferior Vena Cava a Reliable Technique to Treat Chronic Venous Insufficiency Syndrome?" Medical Science Monitor—International Medical Journal of Experimental and Clinical Research (Poland), Mar. 2004, pp. BR61-BR66.
Boudjemline, et al, "Off-pump Replacement of the Pulmonary Valve in Large Right Ventricular Outflow Tracts: A Hybrid Approach," Journal of Thoracic and Cardiovascular Surgery (United States), Apr. 2005, pp. 831-837.
Boudjemline, et al, "Percutaneous Aortic Valve Replacement: Will We Get There?" Heart (British Cardiac Society) (England), Dec. 2001, pp. 705-706.
Boudjemline, et al, "Percutaneous Closure of a Paravalvular Mitral Regurgitation with Amplatzer and Coil Prostheses," Archives des Maladies du Coeur Et Des Vaisseaux (France), May 2002, pp. 483-486.
Boudjemline, et al, "Percutaneous Implantation of a Biological Valve in the Aorta to Treat Aortic Valve Insufficiency—A Sheep Study," Medical Science Monitor—International Medical Journal of.Experimental and Clinical Research (Poland), Apr. 2002, pp. BR113-BR116.
Boudjemline, et al, "Percutaneous Implantation of a Biological Valve in Aortic Position: Preliminary Results in a Sheep Study," European Heart Journal 22, Sep. 2001, p. 630.
Boudjemline, et al, "Percutaneous Implantation of a Valve in the Descending Aorta in Lambs," European Heart Journal (England), Jul. 2002, pp. 1045-1049.
Boudjemline, et al, "Percutaneous Pulmonary Valve Replacement in a Large Right Ventricular Outflow Tract: An Experimental Study," Journal of the American College of Cardiology (United States), Mar. 17, 2004, pp. 1082-1087.
Boudjemline, et al, "Percutaneous Valve Insertion: A New Approach," Journal of Thoracic and Cardiovascular Surgery (United States), Mar. 2003, pp. 741-742.
Boudjemline, et al, "Stent Implantation Combined with a Valve Replacement to Treat Degenerated Right Ventricle to Pulmonary Artery Prosthetic Conduits," European Heart Journal 22, Sep. 2001, p. 355.
Boudjemline, et al, "Steps Toward Percutaneous Aortic Valve Replacement," Circulation (United States), Feb. 12, 2002, pp. 775-778.
Boudjemline, et al, "The Percutaneous Implantable Heart Valve," Progress in Pediatric Cardiology (Ireland), 2001, pp. 89-93.
Boudjemline, et al, "Transcatheter Reconstruction of the Right Heart," Cardiology in the Young (England), Jun. 2003, pp. 308-311.
Coats, et al, "The Potential Impact of Percutaneous Pulmonary Valve Stent Implantation on Right Ventricular Outflow Tract Re-Intervention," European Journal of Cardio-Thoracic Surgery (England), Apr. 2005, pp. 536-543.

(56) **References Cited**

OTHER PUBLICATIONS

Cribier, A. et al, "Percutaneous Transcatheter Implantation of an Aortic Valve Prosthesis for Calcific Aortic Stenosis: First Human Case Description," Circulation (2002) 3006-3008.
Davidson et al., "Percutaneous therapies for valvular heart disease," Cardiovascular Pathology 15 (2006) 123-129.
Hanzel, et al., "Complications of percutaneous aortic valve replacement: experience with the Criber-Edwards™ percutaneous heart valve," EuroIntervention Supplements (2006), I (Supplement A) A3-A8.
Huber, et al., "Do Valved Stents Compromise Coronary Flow?" Eur. J. Cardiothorac. Surg. 2004;25:754-759.
Khambadkone, "Nonsurgical Pulmonary Valve Replacement: Why, When, and How?" Catheterization and Cardiovascular Interventions—Official Journal of the Society for Cardiac Angiography & Interventions (United States), Jul. 2004, pp. 401-408.
Khambadkone, et al, "Percutaneous Implantation of Pulmonary Valves," Expert Review of Cardiovascular Therapy (England), Nov. 2003, pp. 541-548.
Khambadkone, et al, "Percutaneous Pulmonary Valve Implantation: Early and Medium Term Results," Circulation 108 (17 Supplement), Oct. 28, 2003, p. IV-375.
Khambadkone, et al, "Percutaneous Pulmonary Valve Implantation: Impact of Morphology on Case Selection," Circulation 108 (17 Supplement), Oct. 28, 2003, p. IV-642-IV-643.
Lutter, et al, "Percutaneous Aortic Valve Replacement: An Experimental Study. I. Studies on Implantation," The Journal of Thoracic and Cardiovascular Surgery, Apr. 2002, pp. 768-776.
Lutter, et al, "Percutaneous Valve Replacement: Current State and Future Prospects," Annals of Thoracic Surgery (Netherlands), Dec. 2004, pp. 2199-2206.
Medtech Insight, "New Frontiers in Heart Valve Disease," vol. 7, No. 8 (2005).
Palacios, "Percutaneous Valve Replacement and Repair, Fiction or Reality?" Journal of American College of Cardiology, vol. 44, No. 8 (2004) pp. 1662-1663.
Pelton et al., "Medical Uses of Nitinol," Materials Science Forum vols. 327-328, pp. 63-70 (2000).
Ruiz, "Transcathether Aortic Valve Implantation and Mitral Valve Repair: State of the Art," Pediatric Cardiology, vol. 26, No. 3 (2005).
Saliba, et al, "Treatment of Obstructions of Prosthetic Conduits by Percutaneous Implantation of Stents," Archives des Maldies du Coeur et des Vaisseaux (France), 1999, pp. 591-596.
Webb, et al., "Percutaneous Aortic Valve Implantation Retrograde from the Femoral Artery," Circulation (2006), 113;842-850.
Boudjemline, et al, "Percutaneous Implantation of a Biological Valve in the Aorta to Treat Aortic Valve Insufficiency—A Sheep Study," Medical Science Monitor—International Medical Journal of Experimental and Clinical Research (Poland), Apr. 2002, pp. BR113-BR116.
Hanzel, et al., "Complications of percutaneous aortic valve replacement: experience with the CriberEdwards™ percutaneous heart valve," EuroIntervention Supplements (2006), 1 (Supplement A) A3-A8.
Medtech Insight, "New Frontiers in Heart Valve, Disease," vol. 7, No. 8 (2005).
Stassano et al., "Mid-term results of the valve-on-valve technique for bioprosthetic failure," Eur. J. Cardiothorac. Surg. 2000; 18:453-457.
Expert report of Dr. Nigel Buller, dated Jan. 12, 2009, Edwards' United Kingdom action for invalidity, Claim No. HC 08CO0934 (83 pages).
Expert report of Dr. Nigel Buller, non-confidential annex—infringement, dated Jan. 12, 2009, Edwards' United Kingdom action for invalidity, Claim No. HC 08CO0934 (12 pages).
Expert report of Dr. Rodolfo Quijano, dated Jan. 9, 2009, Edwards' United Kingdom action for invalidity, Claim No. HC 08CO0934 (18 pages).
First Expert report of Prof. David Williams, dated Jan. 12, 2009, Edwards' United Kingdom action for invalidity, Claim No. HC 08CO0934 (41 pages).
First Expert report of Prof. Martin Rothman, dated Jan. 12, 2009, *Edwards Lifesciences and Cook Biotech*, Edwards' United Kingdom action for invalidity, Claim No. HC 08CO0934 (64 pages).
Fourth Expert report of Prof. Martin Rothman, dated Apr. 22, 2009, *Edwards Lifesciences and Cook Biotech*, Edwards' United Kingdom action for invalidity, Claim No. HC 08CO0934 (10 pages).
Second Expert report of Dr. Nigel Buller, dated Feb. 25, 2009, Edwards' United Kingdom action for invalidity, Claim No. HC 08CO0934 (24 pages).
Second Expert report of Dr. Rodolfo Quijano, dated Feb. 26, 2009, Edwards' United Kingdom action for invalidity, Claim No. HC 08CO0934 (6 pages).
Second Expert report of Prof. David Williams, dated Feb. 5, 2009, Edwards' United Kingdom action for invalidity, Claim No. HC 08CO0934 (15 pages).
Second Expert report of Prof. Martin Rothman, dated Feb. 5, 2009, *Edwards Lifesciences and Cook Biotech*, Edwards' United Kingdom action for invalidity, Claim No. HC 08CO0934 (11 pages).
Third Expert report of Dr. Nigel Buller, dated Apr. 21, 2009, Edwards' United Kingdom action for invalidity, Claim No. HC 08CO0934 (6 pages).
Third Expert report of Dr. Rudolfo Quijatio, dated Apr. 27, 2009, Edwards' United Kingdom action for invalidity, Claim No. HC 08CO0934 (3 pages).
Third Expert report of Prof. David Williams, dated Apr. 22, 2009, Edwards' United Kingdom action for invalidity, Claim No. HC 08CO0934 (9 pages).
Pavcnik et al., "Aortic and venous valve for percutaneous insertion," Min. Invas. Ther. & Allied Techol. 2000, vol. 9, pp. 287-292.
First Expert report of Dr. Nigel Person Buller (30 pages), *Corevalve, Inc.* v. *Edwards Lifesciences AG and Edwards Lifesciences PVT, Inc.*, High Court of Justice—Chancery Division Patents Court, United Kingdom, Case No. HC-07-C01243.
Second Expert report of Dr. Nigel Person Buller (5 pages), *Corevalve, Inc.* v. *Edwards Lifesciences AG and Edwards Lifesciences PVT, Inc.*, High Court of Justice—Chancery Division Patents Court, United Kingdom, Case No. HC-07-C01243.
Drawing by Dr. Buller (Edwards Expert) of his interpretation of the "higher stent" referred to at col. 8, lines 13-222 of Andersen EP 592410B1 (1 page), *Corevalve, Inc.* v. *Edwards Lifesciences AG and Edwards Lifesciences PVT, Inc.*, High Court of Justice—Chancery Division Patents Court, United Kingdom, Case No. HC-07-C01243.
Drawing by Dr. Buller (Edwards Expert) of "higher stent" on the schematic representation of the aortic valve area set out in Figure 2 of Rothman's first expert report (1 page), *Corevalve, Inc.* v. *Edwards Lifesciences AG and Edwards Lifesciences PVT, Inc.*, High Court of Justice—Chancery Division Patents Court, United Kingdom, Case No. HC-07-C01243.
First Expert report of Professor John R. Pepper (20 pages), *Corevalve, Inc.* v. *Edwards Lifesciences AG and Edwards Lifesciences PVT, Inc.*, High Court of Justice—Chancery Division Patents Court, United Kingdom, Case No. HC-07-C01243.
Second Expert report of Professor John R. Pepper (3 pages), *Corevalve, Inc.* v. *Edwards Lifesciences AG and Edwards Lifesciences PVT, Inc.*, High Court of Justice—Chancery Division Patents Court, United Kingdom, Case No. HC-07-C01243.
First Expert report of Dr. Anthony C. Lunn (7 pages), *Corevalve, Inc.* v. *Edwards Lifesciences AG and Edwards Lifesciences PVT, Inc.*, High Court of Justice—Chancery Division Patents Court, United Kingdom, Case No. HC-07-C01243.
First Witness statement of Stanton Rowe (9 pages), *Corevalve, Inc.* v. *Edwards Lifesciences AG and Edwards Lifesciences PVT, Inc.*, High Court of Justice—Chancery Division Patents Court, United Kingdom, Case No. HC-07-C01243.
Second Witness statement of Stanton Rowe (3 pages), *Corevalve, Inc.* v. *Edwards Lifesciences AG and Edwards Lifesciences PVT, Inc.*, High Court of Justice—Chancery Division Patents Court, United Kingdom, Case No. HC-07-C01243.
PVT slides naming Alain Cribier, Martin Leon, Stan Rabinovich and Stanton Rowe (16 pages), *Corevalve, Inc.* v. *Edwards Lifesciences AG and Edwards Lifesciences PVT, Inc.*, High Court of Justice—Chancery Division Patents Court, United Kingdom, Case No. HC-07-C01243.

(56) **References Cited**

OTHER PUBLICATIONS

Expert Report of Prof. Martin T. Rothman (74 pages) redacted, *Edwards* v. *CoreValve*, U.S. District Court, District of Delaware, Case No. 08-091, dated Jun. 29, 2009.
First Expert report of Richard A. Hillstead (41 pages), *Corevalve, Inc.* v. *Edwards Lifesciences AG and Edwards Lifesciences PVT, Inc.*, High Court of Justice—Chancery Division Patents Court, United Kingdom, Case No. HC-07-C01243.
Reply Expert report of Richard A. Hillstead (9 pages), *Corevalve, Inc.* v. *Edwards Lifesciences AG and Edwards Lifesciences PVT, Inc.*, High Court of Justice—Chancery Division Patents Court, United Kingdom, Case No. HC-07-C01243.
First Expert report of Dr. Nigel Person Buller (30 pages), (Hearing Dates Jun. 25, 2009-Jul. 2, 2009), *Corevalve, Inc.* v. *Edwards Lifesciences AG and Edwards Lifesciences PVT, Inc.*, High Court of Justice—Chancery Division Patents Court, United Kingdom, Case No. HC-07-C01243.
Second Expert report of Dr. Nigel Person Buller (5 pages), (Hearing Dates Jun. 25, 2009-Jul. 2, 2009), *Corevalve, Inc.* v. *Edwards Lifesciences AG and Edwards Lifesciences PVT, Inc.*, High Court of Justice—Chancery Division Patents Court, United Kingdom, Case No. HC-07-C01243.
Drawing by Dr. Buller (Edwards Expert) of his interpretation of the "higher stent" referred to at col. 8, lines 13-222 of Andersen EP 592410B1 (1 page), *Corevalve, Inc.* v. *Edwards Lifesciences AG and Edwards Lifesciences PVT, Inc.*, High Court of Justice—Chancery Division Patents Court, United Kingdom, Case No. HC-07-C01243, (Hearing Dates Jun. 25, 2009-Jul. 2, 2009).
Drawing by Dr. Buller (Edwards Expert) of "higher stent" on the schematic representation of the aortic valve area set out in Figure 2 of Rothman's first expert report (1 page),*Corevalve, Inc.* v. *Edwards Lifesciences AG and Edwards Lifesciences PVT, Inc.*, High Court of Justice—Chancery Division Patents Court, United Kingdom, Case No. HC-07-C01243, (Hearing Dates Jun. 25,2009-Jul. 2, 2009).
First Expert report of Professor John R. Pepper (20 pages) (Hearing Dates Jun. 25, 2009-Jul. 2, 2009), *Corevalve, Inc.* v. *Edwards Lifesciences AG and Edwards Lifesciences PVT, Inc.*, High Court of Justice—Chancery Division Patents Court, United Kingdom, Case No. HC-07-C01243.
Second Expert report of Professor John R. Pepper (3 pages) (Hearing Dates Jun. 25, 2009-Jul. 2, 2009), *Corevalve, Inc.* v. *Edwards Lifesciences AG and Edwards Lifesciences PVT, Inc.*, High Court of Justice—Chancery Division Patents Court, United Kingdom, Case No. HC-07-C01243.
First Expert report of Dr. Anthony C. Lunn (7 pages) (Hearing Dates Jun. 25, 2009-Jul. 2, 2009), *Corevalve, Inc.* v. *Edwards Lifesciences AG and Edwards Lifesciences PVT, Inc.*, High Court of Justice—Chancery Division Patents Court, United Kingdom, Case No. HC-07-C01243.
First Witness statement of Stanton Rowe (9 pages) (Hearing Dates Jun. 25, 2009-Jul. 2, 2009), *Corevalve, Inc.* v. *Edwards Lifesciences AG and Edwards Lifesciences PVT, Inc.*, High Court of Justice—Chancery Division Patents Court, United Kingdom, Case No. HC-07-C01243.
Second Witness statement of Stanton Rowe (3 pages) (Hearing Dates Jun. 25, 2009-Jul. 2, 2009), *Corevalve, Inc.* v. *Edwards Lifesciences AG and Edwards Lifesciences PVT, Inc.*, High Court of Justice—Chancery Division Patents Court, United Kingdom, Case No. HC-07-C01243.
PVT slides naming Alain Cribier, Martin Leon, Stan Rabinovich and Stanton Rowe (16 pages) (Hearing Dates Jun. 25, 2009-Jul. 2, 2009), *Corevalve, Inc.* v. *Edwards Lifesciences AG and Edwards Lifesciences PVT, Inc.*, High Court of Justice—Chancery Division Patents Court, United Kingdom, Case No. HC-07-C01243.
Expert Rebuttal Report of Prof. Martin T. Rothman (32 pages) redacted, *Edwards* v. *CoreValve*, U.S. District Court, District of Delaware, Case No. 08-091, dated Jul. 29, 2009.
Expert Report of Prof. Martin T. Rothman (74 pages) redacted, *Edwards* v. *CoreValve*, U.S. District.Court, District of Delaware, Case No. 08-091, dated Jun. 29, 2009.
First Expert report of Richard A. Hillstead (41 pages) (Hearing Dates Jun. 25, 2009-Jul. 2, 2009), *Corevalve, Inc.* v. *Edwards Lifesciences AG and Edwards Lifesciences PVT, Inc.*, High Court of Justice—Chancery Division Patents Court, United Kingdom, Case No. HC-07-C01243.
Reply Expert report of Richard A. Hillstead (9 pages) (Hearing Dates Jun. 25, 2009-Jul. 2, 2009), *Corevalve, Inc.* v. *Edwards Lifesciences AG and Edwards Lifesciences PVT, Inc.*, High Court of Justice—Chancery Division Patents Court, United Kingdom, Case No. HC-07-C01243.

* cited by examiner

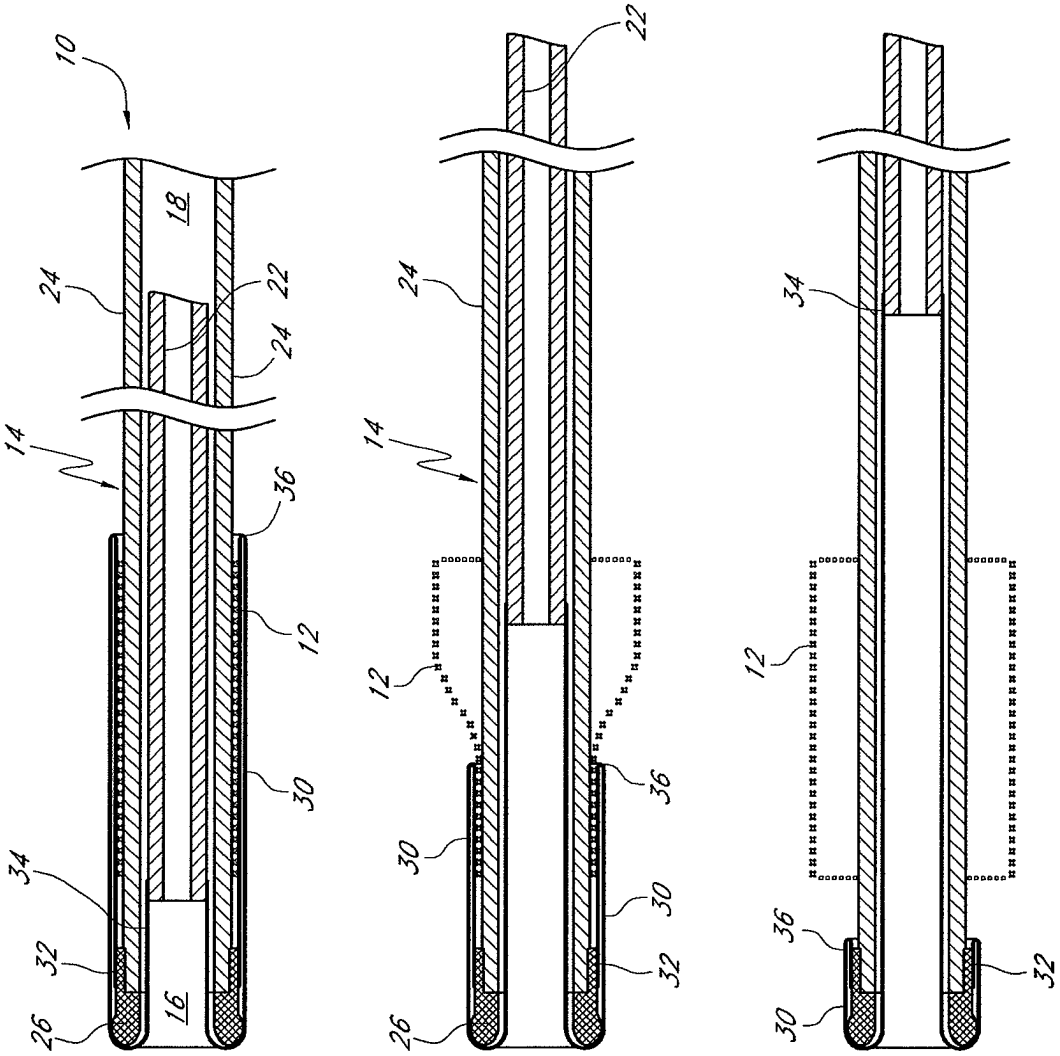

FIG. 1A

FIG. 1B

FIG. 1C

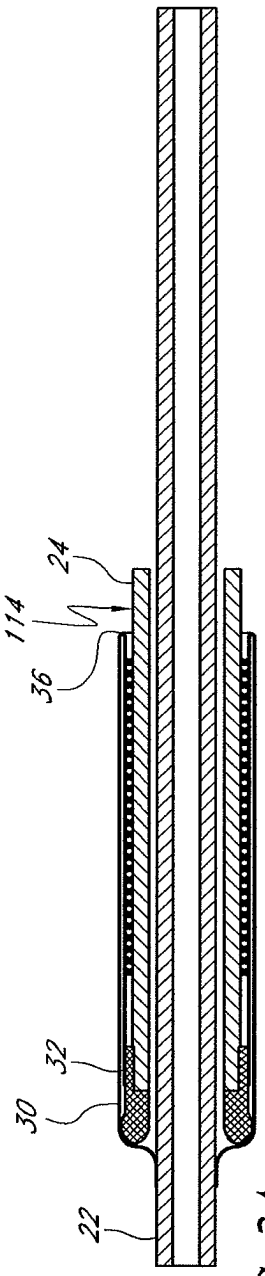

FIG. 2A

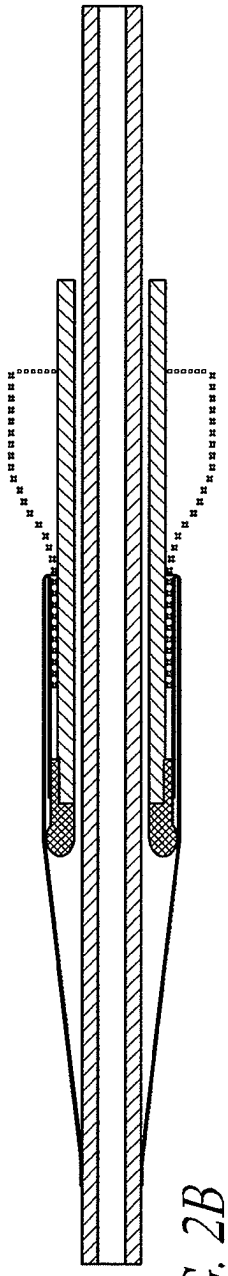

FIG. 2B

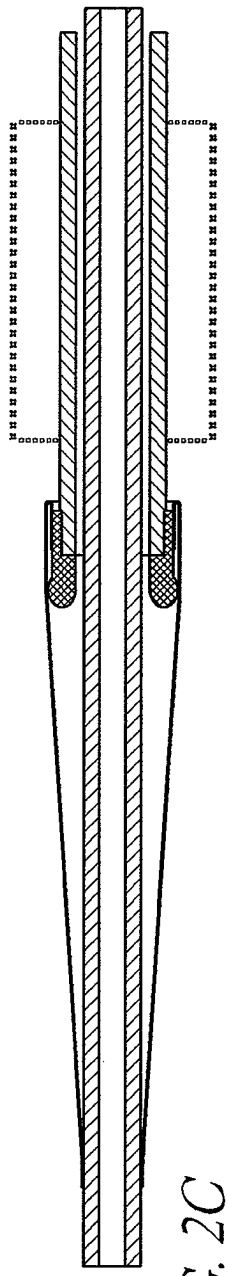

FIG. 2C

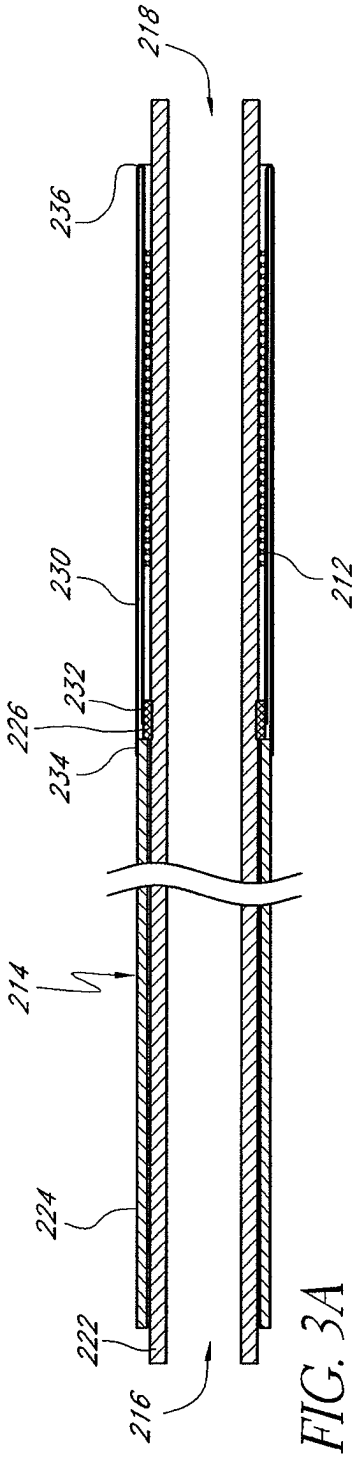
218
236
230
212
232
226
234
214
224
222
216

FIG. 3A

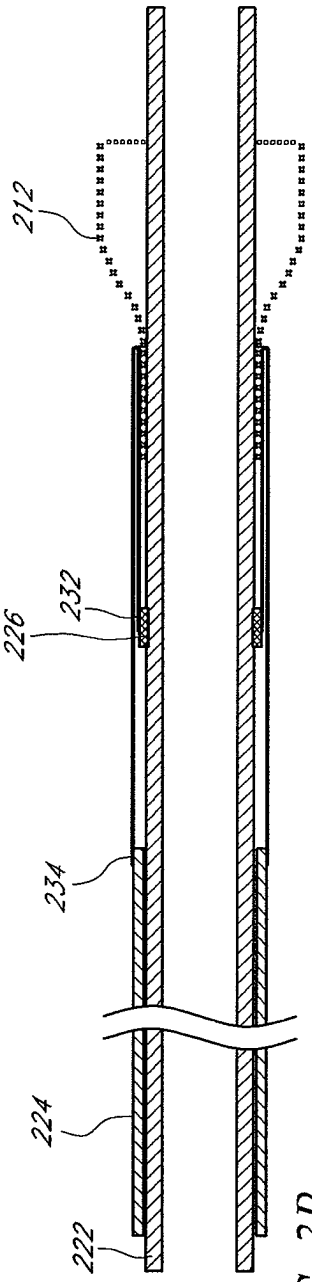
212
232
226
234
224
222

FIG. 3B

DELIVERY SYSTEM FOR DEPLOYMENT OF MEDICAL DEVICES

BACKGROUND OF THE INVENTION

1. Field of the Invention

The present invention relates generally to an apparatus and method for loading a medical device onto a minimally invasive delivery system, such as a delivery catheter, and deploying the device in situ.

2. Description of the Related Art

Percutaneous aortic valve replacement (PAVR) technology is emerging that provides an extremely effective and safe alternative to therapies for aortic stenosis specifically, and aortic disease generally. Historically, aortic valve replacement necessitated surgery with its attendant risks and costs. The replacement of a deficient cardiac valve performed surgically requires first opening the thorax, placing the patient under extracorporeal circulation or peripheral aorto-venous heart assistance, temporarily stopping the heart, exposing and excising the deficient valve, and then implanting a prosthetic valve in its place. This procedure has the disadvantage of requiring prolonged patient hospitalization, as well as extensive and often painful recovery. Although safe and effective, surgical replacement presents advanced complexities and significant costs. For some patients, however, surgery is not an option for one or many possible reasons. As such, a large percentage of patients suffering from aortic disease go untreated.

To address the risks associated with open-heart implantation, devices and methods for replacing a cardiac valve by less invasive means have been developed. For example, CoreValve, Inc. of Irvine, Calif. has developed a prosthetic valve fixed to a collapsible and expandable support frame that can be loaded into a delivery catheter. Such a prosthesis may be deployed minimally invasively through the vasculature at significantly less patient risk and trauma. A description of the CoreValve bioprosthesis and various embodiments appears in U.S. Pat. Nos. 7,018,406 and 7,329,278, and published Application Nos. 2004/0210304 and 2007/0043435. By using a minimally invasive replacement cardiac valve, patient recovery is greatly accelerated over surgical techniques. In the case of the CoreValve device, the support frame is made from shape memory material such as Nitinol. Other catheter-delivery valve replacement systems use stainless steel, or do not rely upon a rigid frame.

As demonstrated successfully to date, using a transcatheter procedure, percutaneous aortic valve replacement proceeds by delivering a prosthetic valve to the diseased valve site for deployment, either using a balloon to expand the valve support against the native lumen or exposing a self-expanding support in situ and allowing it to expand into place. With the latter, the self-expanding frame remains sheathed during delivery until the target site is reached. Advantageously, the frame may be secured to the catheter to avoid premature deployment as the sheath is withdrawn. In the CoreValve valve prosthesis, a hub is employed with two lateral buttons around each of which a frame zig may reside during delivery. The internal radial force of the sheath keeps the frame compressed against the catheter, including the frame zigs in place around the lateral buttons. The catheter generally comprises at least two tubes, an inner tube that carries the prosthesis and an outer tube that carries the sheath, permitting the sheath to move relative to the prosthesis.

As with traditional cardiovascular interventional therapies, transcatheter device deployment may proceed retrograde against normal blood flow, or antegrade, with blood flow. For aortic valve replacement, entry through the femoral arteries proceeds in a retrograde format through the iliac, descending aorta, over the arch and to the native annulus. In some cases, entry has been made closer to the arch; for example through the left subclavian artery. Antegrade procedures have been performed whether delivery takes place through the venous system transeptally to the native aortic annulus. More recently, transapical procedures have been performed whereby a cardiac surgeon delivers a catheter through the left ventricle apex to the target site.

With retrograde deployment, it is generally desired that the catheter be advanced within the vasculature so that the device is positioned where desired at the annulus site. With some embodiments under development, the desired site is the annulus itself. With the CoreValve device, the desired site extends from the annulus to the ascending aorta, given its relative length. In the transfemoral approach, when the CoreValve device is positioned at the desired site, the sheath is withdrawn to the point where the inflow end of the device (preferably positioned at the native annulus) expands to engage and push radially outwardly the native valve leaflets. The sheath continues to be withdrawn proximally as the prosthesis continues to expand as it is exposed until the sheath covers just the outflow portion of the prosthesis still secured to the hub ears. Any readjustment of the axial position of the device in situ can be made during this process based upon electronic visual feedback during the procedure. Once well positioned, the sheath is fully withdrawn, the device fully expands in place, and the catheter is withdrawn through the center of the device and out through the vasculature. While it would be possible to deploy the prosthetic device such that the sheath could be withdrawn distally so that the outflow end of the prosthesis deploys first, such an arrangement would require advancing distally the outer tube of the catheter connected to the sheath distally. In the case of transfemoral retrograde delivery, that would cause the outer tube to project well into the left ventricle, which is not desirable. In a antegrade approach, for example transapical delivery, the reverse situation exists. There it is more desirable to advance the sheath distally to expose the inflow end of the prosthesis at the native annulus first. The native anatomy can accommodate this distal deployment because the outer tube carrying the sheath is advanced up the ascending aorta towards the arch. Like the retrograde approach, once the valve prosthesis is fully deployed, the catheter may be withdrawn through the center of the prosthesis and removed through the apex of the heart.

With minimally invasive cardiac valve replacement, as may be appreciated, loading of a self-expanding valved frame into a sheath (or capsule) can be difficult because of the frictional forces that inhibit movement of the frame into and out of the sheath. The radial forces attendant in a self-expanding frame are pushing the frame against the inner wall of the sheath during the axial movement of the frame relative to the sheath. The friction translates into a greater axial force that must be applied to smooth and reliably load and deploy the frame from within the distal sheath. Where precision is demanded, such friction requiring greater axial force to be applied makes accurate deployment more difficult. Accordingly, a need exists for a suitable system and method of loading and deploying a self-expanding valved frame using a delivery catheter that reduces the inhibiting nature of the frictional forces during loading and deployment.

SUMMARY OF THE INVENTION

The invention provided comprises embodiments for minimally invasively delivering a medical device to a patient. The

apparatus comprises a sheath that is connected at opposing ends to concentric tubes that move relative to each other in a manner that alternatively covers and exposes the medical device. A portion of the sheath is arranged so as to invert upon itself causing an inversion point. It is contemplated that axial movement of one tube relative to the other simultaneously moves the inversion point over or away from the medical device. In such a manner, there is little frictional engagement between the inversion point and the device (e.g., self-expanding frame). As contemplated, there are several different embodiments that can be made to employ the invention claimed herein, including some with more than one inversion point. These and other features, aspects and advantages of embodiments of the present invention are described in greater detail below in connection with drawings of the apparatus and method, which is intended to illustrate, but not to limit, the embodiments of the present invention.

BRIEF DESCRIPTION OF THE DRAWINGS

FIGS. **1**A-C are cross-sectional views of one embodiment of a device delivery system showing sequential axial movement of an internal tube relative to an outer tube.

FIGS. **2**A-C are cross-sectional views of a second embodiment of a device delivery system showing sequential axial movement of an internal tube relative to an outer tube.

FIGS. **3**A and **3**B are cross-sectional views of another embodiment of a device delivery system showing sequential axial movement of an outer tube relative to an outer tube.

DETAILED DESCRIPTION OF THE PREFERRED EMBODIMENT

Referring to FIGS. **1**A-C, one exemplary embodiment of an improved delivery system **10** for a medical device **12** comprises a catheter **14** having a distal end **16** and a proximal end **18**. In the figures shown, and by way of example, the medical device **12** is a self-expanding frame.

The catheter **14** further comprises a first inner tube **22** and an outer tube **24**. At the distal end of the outer tube **24** is a cap **26** affixed to the outer tube **24**. The cap **26** is preferably configured to have a smooth rounded surface at its distal most-end. By way of simplifying the description herein, FIG. **1**A shows the system **10** such that the distal end of inner tube **22** is positioned proximal the distal end of outer tube **24**, whereas FIG. **1**B shows the inner tube **22** pulled in a proximal direction, with FIG. **1**C showing it pulled further in the proximal direction.

The catheter **14** further comprises a sheath **30** preferably made of resilient pliable material, such as those used in the industry. The sheath may comprise in whole or in part a braided, woven, or stitched structure, a polymer, or may comprise an inflatable balloon. A first end **32** of the sheath **30** is affixed to an outer surface of the cap **26** affixed to the distal end of the outer tube **24**. A second end **34** of the sheath **30** is affixed to the outer surface of the distal end of the inner tube **22**. As shown in FIG. **1**A, the sheath **30** is configured to constrain the medical device **12** in a collapsed position for delivery to a target site.

The sheath **30** is configured so that it overlaps itself on an external surface of the catheter **14** to form an inversion point **36** proximal of the distal end. The sheath **30** is further configured to conform to the smooth rounded distal surface of the cap **26** such that, as the inner tube is pulled in a proximal direction, the sheath smoothly slides over the cap causing the inversion point **36** to move distally. FIGS. **1**A through **1**C show that progression. As the sheath **30** is pulled so that the inversion point **36** moves distally, the medical device **12** is progressively exposed, permitting it to expand as desired.

With the embodiment shown in FIGS. **1**A-**1**C, the inner tube **22** does not need to advance distally beyond the distal cap **26** of the outer tube **24**. Indeed, the catheter **14** need not be placed much more distal than the target site of the medical device **12**. Thus, deployment of a medical device using this embodiment may be made translumenally through the vasculature in one of many possible directions. For example, with respect to an aortic valve replacement, where the medical device **12** is an expandable valved frame, the catheter **14** may be directed transfemorally, transapically or through the subclavian artery conveniently. The device **12** may be delivered antegrade or retrograde through the arterial or venous system. Once the medical device **12** is deployed, the entire catheter **14** may be withdrawn proximally from the target site.

It should be appreciated that loading of the medical device **12** onto the outer tube **24** of catheter **14** would entail collapsing the medical device over the outside surface of the outer tube **24** and then moving the inner tube **22** distally relative to the outer tube **24** so as to cause the inversion point **36** to move proximally over the medical device **12**. When the inversion point has reach its proximal-most point, as shown in FIG. **1**A, then catheter **14** may then be used to deliver the medical device **12**. For a self-expanding frame, collapse may be induced by, for example, reducing its temperature. For a balloon expandable frame, the device **12** can be crimped onto the outer tube **24** in one of many known ways. In that case, outer tube **24** would comprise a dilation balloon for in-situ deployment.

A variation on the embodiment of FIGS. **1**A-**1**C is shown in FIGS. **2**A through **2**C, where the components are the same. With this embodiment of catheter **114**, the second end **34** of the sheath is attached to the inner tube **22** so as to permit effective advancement of the inner tube **22** in the distal direction, rather than the proximal direction. As the inner tube **22** is directed distally, the inversion point **36** also advances distally, exposing the medical device **12**. While the embodiment of FIGS. **2**A-**2**C may be used in a variety of delivery directions, as discussed above with the embodiment of FIGS. **1**A-**1**C, it is preferred that the target site for the medical device **12** using this catheter embodiment **14** be such that there is sufficient room distal of the target site for effective advancement of the inner tube **22**.

Referring to FIGS. **3**A and **3**B, a third exemplary embodiment is shown. There, a medical device **212** is shown sheathed within catheter **214**, which has similar components to catheters **14** and **114** discussed above, but with a somewhat different arrangement. Catheter **214** has a proximal end **216** and a distal end **218**, and comprises an inner tube **222** and an outer tube **224**, where the outer tube and inner tube are movable relative to each other. A collar **226** is affixed to the outside of inner tube **222**. A sheath **230**, covering medical device **212**, has a first end **232** affixed to collar **226** and a second end **234** affixed to the outside distal end of outer tube **224**. The sheath **230** is arranged so as to create an inversion point **236** at a distal location. As the outer tube **224** is retracted proximally, the inversion point **236** likewise moves proximally, exposing the medical device **212** in the same way as explained with the other embodiments.

It should be understood that with any of these exemplary embodiments, or any variation on these configurations, the clinician may manipulate the alternative of the inner or outer tubes to expose the medical device, although this would result in the medical device moving toward a target site during its deployment, rather than remaining stationary during deployment. For example, in the first embodiment, instead of pulling

the inner tube **22** proximally, the medical device **12** may be exposed by advancing the outer tube **24** distally. The result is the same; the inversion point **36** is advanced distally. Likewise, the outer tube **24** of embodiment **2**A-**2**C could be pulled proximally rather than the other tube advanced distally and the inner tube **222** of embodiment **3**A-**3**B could be pulled distally, rather than the other tube being advanced proximally.

One advantage of using an inverting sheath to load and deploy a medical device is that the sheath alternatively covers and exposes the medical device by predominantly a rolling motion rather than a sliding motion, which results in less friction between the medical device and the sheath. This reduces the force required to retract the sheath, which enables more control over the deployment position by, for example, reducing the compression and elongation of the delivery catheter. In addition, where the medical device comprises a prosthetic tissue-based heart valve sutured to a self-expandable frame, the patient's body heat can cause the frame to want to revert to its natural expanded configuration, thereby exerting an outward force against the sheath. During deployment, friction between the sheath and medical device can damage the tissue-based heart valve and sutures. Accordingly, reducing the friction between the sheath and medical device by using a rolling motion rather than a sliding motion can help reduce damage to the medical device and help maintain the condition of the medical device. In other cases, the medical device may be coated with a drug or bioactive material, and the friction caused by sliding the coated stent out of the sheath can result in removal of some of the drug or bioactive material.

In some embodiments, the surface of the sheath that contacts the medical device may be tacky, which enables the tacky surface to frictionally engage the medical device and reduce sliding between the medical device and sheath. The surface can be made tacky by, for example, application of a polymeric material such as polyurethane or another thermoplastic elastomer to the surface or by fabricating the surface from the tacky material.

It is contemplated that the surface of the sheath that contacts itself when inverted may be provided with a lubricious coating or can be made of a lubricious material. The lubricious coating or material can be made of, for example, PTFE, ePTFE, a hydrophilic material, or any other substance that reduces the friction as the inverted sheath slides over itself. Where desired, the sheath may be reinforced to minimize elongation of the sheath as tension is applied. For example, axially-oriented tension bands (not shown) having high tensile modulus material such as ultra high weight polyethylene, Kevlar, carbon, steel, titanium, in the form of a monofilament or fiber may be incorporated within or on the sheath.

In operation, the catheters described are particularly suited for delivery of a heart valve, where precise placement is important. Other critical and less-critical target sites are also contemplated. In the case of a self-expanding aortic valve replacement, the catheter may be delivered transfemorally, transeptally, transapically or through the sub-clavian, among other possible entry ways. In one procedure, the catheter is deployed so that the valved frame is positioned entirely aligned with the target site; e.g., aortic annulus up to ascending aorta. The frame may then be exposed from one end to the other, depending upon the direction of delivery, by either advancing the inner tube relative to the outer tube (for the embodiment of FIG. **2**) or vice versa (for the embodiment of FIG. **1**), or retraction of the outer shaft (for the embodiment of FIG. **3**). As the frame is exposed, it expands outwardly to engage the native intimal lining so placement accuracy is maximized. When the sheath is fully removed and the frame fully expanded, the catheter may then be withdrawn though the functioning prosthetic valve and removed from the patient.

Although embodiments of this invention have been disclosed in the context of certain preferred embodiments and examples, it will be understood by those skilled in the art that the embodiments of the present invention extend beyond the specifically disclosed embodiments to other alternative embodiments and/or uses of the invention and obvious modifications and equivalents thereof. In particular, while the present loading system and method has been described in the context of particularly preferred embodiments, the skilled artisan will appreciate, in view of the disclosure, that certain advantages, features, and aspects of the system may be realized in a variety of other applications, many of which have been noted above. Additionally, it is contemplated that various aspects and features of the invention described can be practiced separately, combined together, or substituted for one another, and that a variety of combination and subcombinations of the features and aspects can be made and still fall within the scope of the invention. Thus, it is intended that the scope of the present invention herein disclosed should not be limited by the particular disclosed embodiments described above, but should be determined only by a fair reading of the claims.

What is claimed is:

1. An apparatus for minimally invasively delivering a medical device to a target site within a patient, the apparatus comprising:

an inner tube having an outside surface suitable for accepting a medical device collapsed thereon in a stationary position;

an outer tube movable relative to the inner tube and incorporated therewith; and

a sheathing material having a first end affixed to a collar attached to the inner tube and a second end affixed to an outside distal end of the outer tube so that a portion of the sheathing material may cover at least some of the medical device when loaded on the apparatus, the inner and outer tubes being aligned concentrically so as to create an inversion point in the sheathing material when one tube is moved relative to the other tube;

wherein the inverted portion of the sheathing material covering at least a portion of the medical device comprises an inside layer and an outside layer, the outside layer overlapping the inside layer, the outside layer being adjacent to the inside layer such that no portion of the outer tube is between any portion of the inside layer and any portion of the outside layer that covers the portion of the medical device loaded on the apparatus and such that the outside layer contacts the inside layer; and

wherein the apparatus is configured so that movement of one tube relative to the other tube causes the inversion point to move relative to the medical device when loaded on the apparatus so as to expose the medical device to expansion when it is desired that the medical device expand at a target site.

2. The apparatus of claim **1**, wherein the first tube comprises a cap having a smooth surface over which a portion of the sheathing material may slide.

3. The apparatus of claim **1**, wherein the sheathing material is reinforced to minimize elongation when tension is applied to the material.

4. The apparatus of claim **1**, wherein the sheathing material comprises a lubricious coating on the surface that contacts itself when inverted.

5. A kit comprising the apparatus of claim **1** and a medical device.

6. The kit of claim **5**, wherein the medical device is a self expanding device.

7. The kit of claim **5**, wherein the medical device is a heart valve prosthesis.

8. The apparatus of claim **1**, wherein an affixed portion of the first end of the sheathing material affixed to the collar is radially outside an outer periphery of a medical device loaded on the apparatus.

9. An apparatus for delivering a medical device to a site within a patient, the apparatus comprising:

a catheter comprising:

distal and proximal ends;

inner and outer tubes, movable with respect to each other with the inner tube being located at least partially inside the outer tube;

a region for receiving the medical device on an outer surface of the inner tube; and

a flexible sheath for retaining the medical device, when positioned in the region, the sheath being folded over upon itself to have outer and inner portions, the outer portion being attached directly or indirectly to an outside distal end of the outer tube and the inner portion being attached directly or indirectly to a collar attached to the inner tube so that movement of one tube relative to the other tube causes movement of the outer portion of the sheath from a position at least partially covering the region to a position at least partially exposing the region;

wherein the outer portion is adjacent to the inner portion such that no portion of the outer tube is between any portion of the inner portion and any portion of the outer portion that partially covers the region and such that the inner portion contacts the outer portion.

10. The apparatus of claim **9**, wherein the outer portion of sheath is movable in the distal direction to at least partially expose the region.

11. The apparatus of dam **9**, wherein the inner tube is movable in the proximal direction to cause the movement of the outer portion of the sheath to at least partially expose the region.

12. The apparatus of claim **9**, wherein the inner tube is movable in the distal direction to cause the movement of the outer portion of the sheath to at least partially expose the region.

13. A kit comprising the apparatus of claim **9** and a medical device.

14. The kit of claim **13**, wherein the medical device is a self expanding device.

15. The kit of claim **13**, wherein the medical device is a heart valve prosthesis.

16. The apparatus of claim **9**, wherein an attached portion of an end at which the inner portion is attached to the collar is radially outside an outer periphery of a medical device in the region.

* * * * *

UNITED STATES PATENT AND TRADEMARK OFFICE

CERTIFICATE OF CORRECTION

PATENT NO. : 8,721,714 B2
APPLICATION NO. : 12/212620
DATED : May 13, 2014
INVENTOR(S) : Gregory Scott Kelley

It is certified that error appears in the above-identified patent and that said Letters Patent is hereby corrected as shown below:

In the Claims

In Claim 11, column 8, line 9
"The apparatus of dam 9, wherein ..." should read -- "The apparatus of claim 9, wherein ..." --

Signed and Sealed this
Fourteenth Day of July, 2015

Michelle K. Lee

Michelle K. Lee
Director of the United States Patent and Trademark Office