US011638585B2

(12) **United States Patent**
Thornton

(10) **Patent No.: US 11,638,585 B2**
(45) **Date of Patent: May 2, 2023**

(54) **DEVICE AND METHOD FOR VARIABLE BLOOD FLOW OCCLUSION**

(71) Applicant: **Cardio-Renal Solutions, Inc.**, San Francisco, CA (US)

(72) Inventor: **Troy Thornton**, San Francisco, CA (US)

(73) Assignee: **Cardio-Renal Solutions, Inc.**, San Francisco, CA (US)

(*) Notice: Subject to any disclaimer, the term of this patent is extended or adjusted under 35 U.S.C. 154(b) by 0 days.

(21) Appl. No.: **17/852,070**

(22) Filed: **Jun. 28, 2022**

(65) **Prior Publication Data**

US 2022/0323214 A1 Oct. 13, 2022

Related U.S. Application Data

(63) Continuation of application No. 17/692,007, filed on Mar. 10, 2022.

(Continued)

(51) **Int. Cl.**
A61B 17/12 (2006.01)
A61F 2/90 (2013.01)

(Continued)

(52) **U.S. Cl.**
CPC .. ***A61B 17/12036*** (2013.01); ***A61B 17/12022*** (2013.01); ***A61B 17/12109*** (2013.01);

(Continued)

(58) **Field of Classification Search**
CPC A61F 2/07; A61F 2002/068; A61F 2250/001; A61B 17/12022; A61B 17/12036; A61B 17/12109
See application file for complete search history.

(56) **References Cited**

U.S. PATENT DOCUMENTS

4,546,759 A 10/1985 Solar
6,193,748 B1 2/2001 Thompson et al.

(Continued)

FOREIGN PATENT DOCUMENTS

WO WO2020/121309 A1 6/2020
WO WO2020/214416 A1 10/2020
WO WO 2021/226014 * 11/2021 ..... A61B 17/12

OTHER PUBLICATIONS

Thornton; U.S. Appl. No. 17/692,007 entitled "Device and method for variable blood flow occasion." filed Mar. 10, 2022.

Primary Examiner — Suba Ganesan
(74) *Attorney, Agent, or Firm* — Shay Glenn LLP

(57) **ABSTRACT**

A blood flow control device having a catheter adapted to be advanced into a blood vessel to a blood flow control site within the blood vessel; an expandable anchor supported by the catheter, the expandable anchor being adapted to expand to engage a wall of the blood vessel, the expandable anchor having a blood impermeable wall defining an adjustable blood flow path extending through the expandable anchor from a proximal opening to a distal opening, the catheter being disposed outside of the adjustable blood flow path; a flow control element supported by the catheter, the flow control element being adapted to change a dimension of the adjustable blood flow path to change a rate of blood flow through the blood flow path; and a blood flow control actuator disposed at a proximal section of the catheter and adapted to actuate the flow control element.

53 Claims, 20 Drawing Sheets

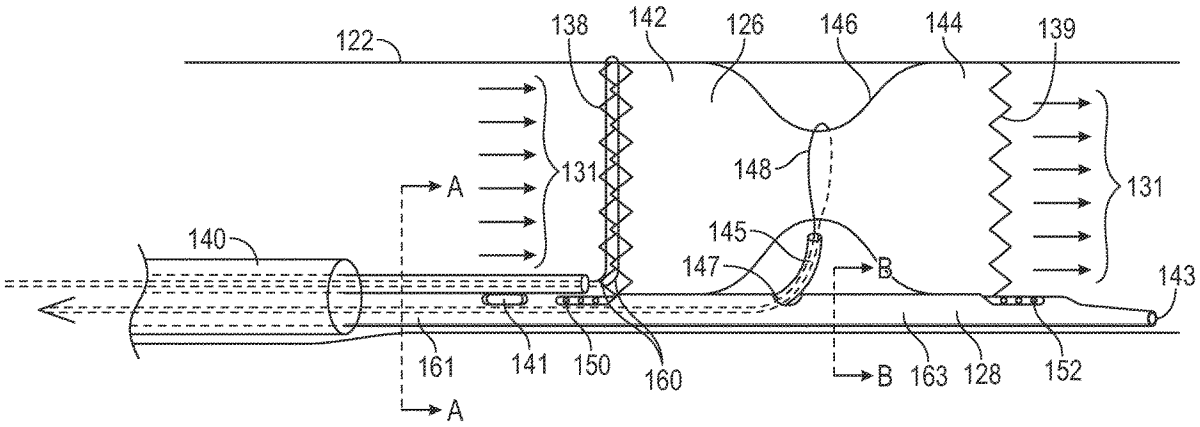

Imperative Care v. Inari Medical
IPR2025-01025
Imperative Care Ex. 1082

Related U.S. Application Data

(60) Provisional application No. 63/160,637, filed on Mar. 12, 2021.

(51) **Int. Cl.**
A61F 2/07 (2013.01)
A61F 2/24 (2006.01)
A61F 2/06 (2013.01)

(52) **U.S. Cl.**
CPC ***A61F 2/07*** (2013.01); ***A61F 2/90*** (2013.01); *A61F 2/2418* (2013.01); *A61F 2002/068* (2013.01); *A61F 2220/0016* (2013.01); *A61F 2220/0075* (2013.01); *A61F 2250/001* (2013.01); *A61F 2250/0013* (2013.01); *A61F 2250/0039* (2013.01)

(56) **References Cited**

U.S. PATENT DOCUMENTS

8,968,239 B2 3/2015 Herrera
9,393,384 B1 7/2016 Kapur et al.
9,414,842 B2 8/2016 Glimsdale et al.
9,675,474 B2 6/2017 McGuckin et al.
10,363,044 B2 7/2019 Tal et al.
10,758,715 B2 9/2020 Kapur et al.
10,842,974 B2 11/2020 Kapur et al.
10,898,698 B1 * 1/2021 Eigler A61B 17/0057
2003/0023200 A1 1/2003 Barbut et al.
2004/0249335 A1 12/2004 Faul et al.
2005/0055082 A1 * 3/2005 Ben Muvhar A61F 2/958 623/1.15
2006/0064059 A1 3/2006 Gelfand et al.
2009/0131785 A1 5/2009 Lee et al.
2013/0090714 A1 4/2013 McHugo
2013/0261531 A1 10/2013 Gallagher et al.
2014/0172069 A1 6/2014 Roeder et al.
2018/0085128 A1 * 3/2018 Bellomo A61B 17/12109
2018/0116839 A1 5/2018 McHugo et al.
2020/0178978 A1 6/2020 Ben-Muvhar et al.
2020/0237538 A1 7/2020 Syed
2020/0297516 A1 9/2020 Bellomo et al.
2021/0077792 A1 3/2021 Kapur et al.
2021/0177426 A1 6/2021 Tal
2021/0186517 A1 6/2021 Tal et al.
2022/0061852 A1 3/2022 Shohat et al.

* cited by examiner

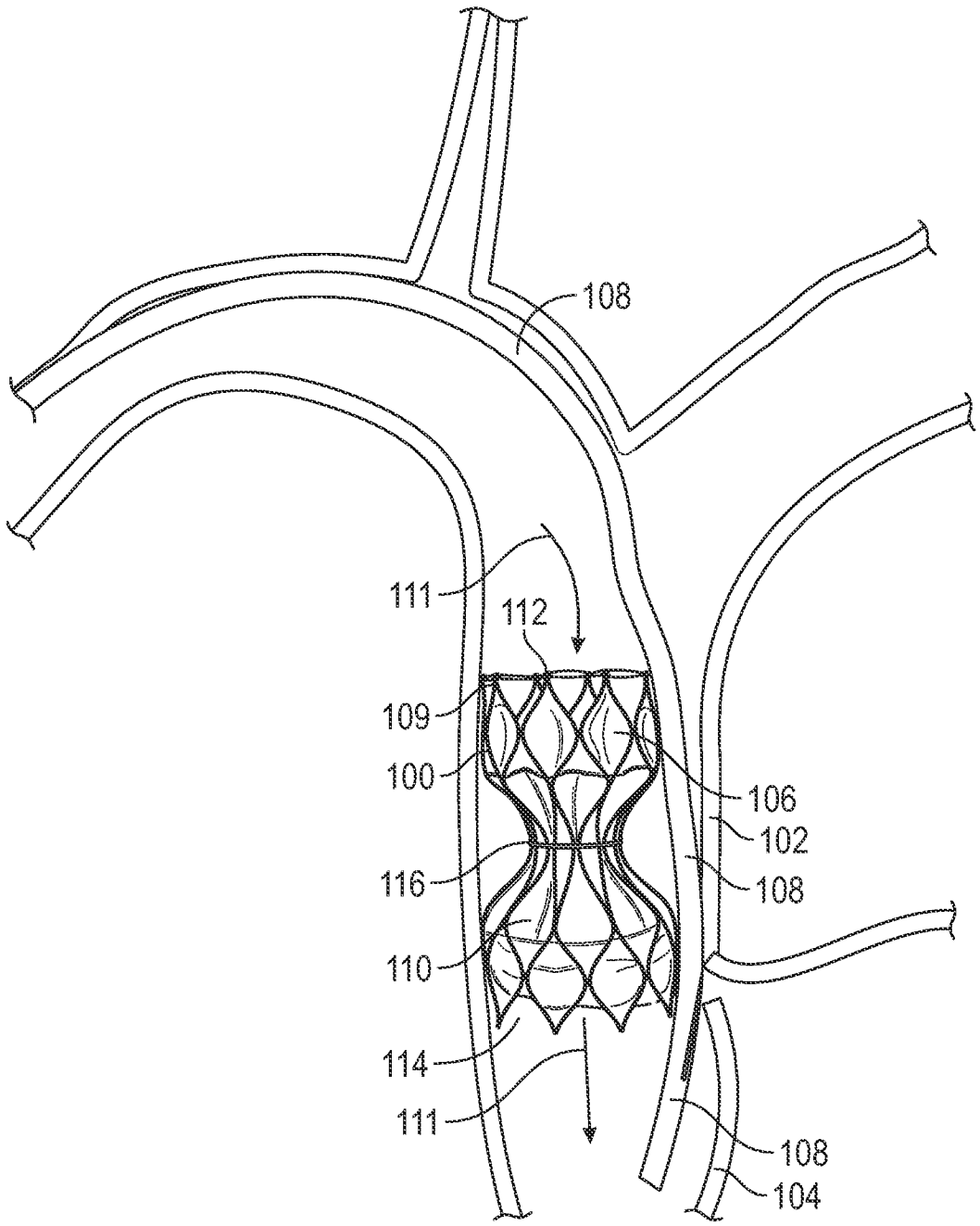

FIG. 1

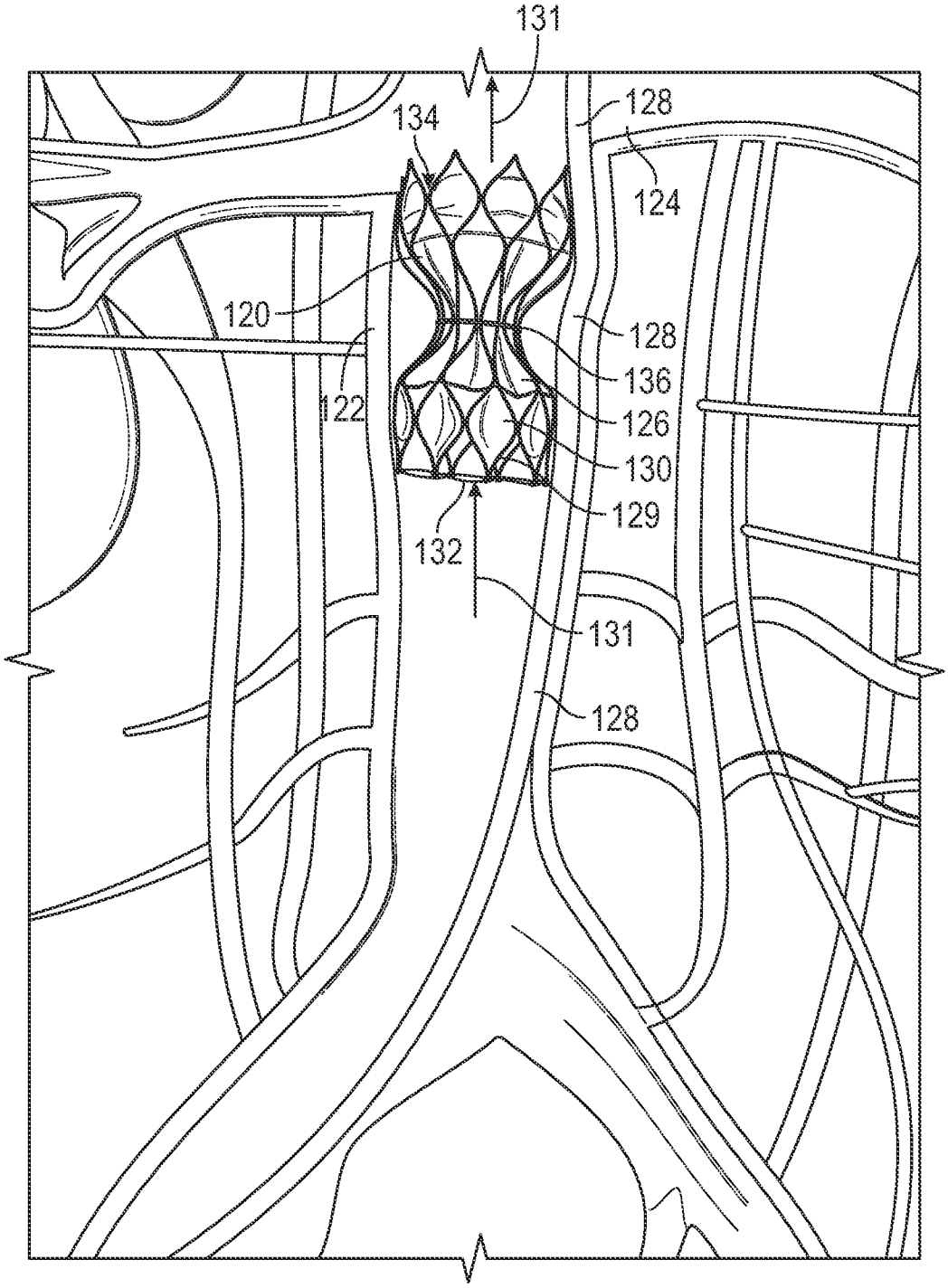

FIG. 2

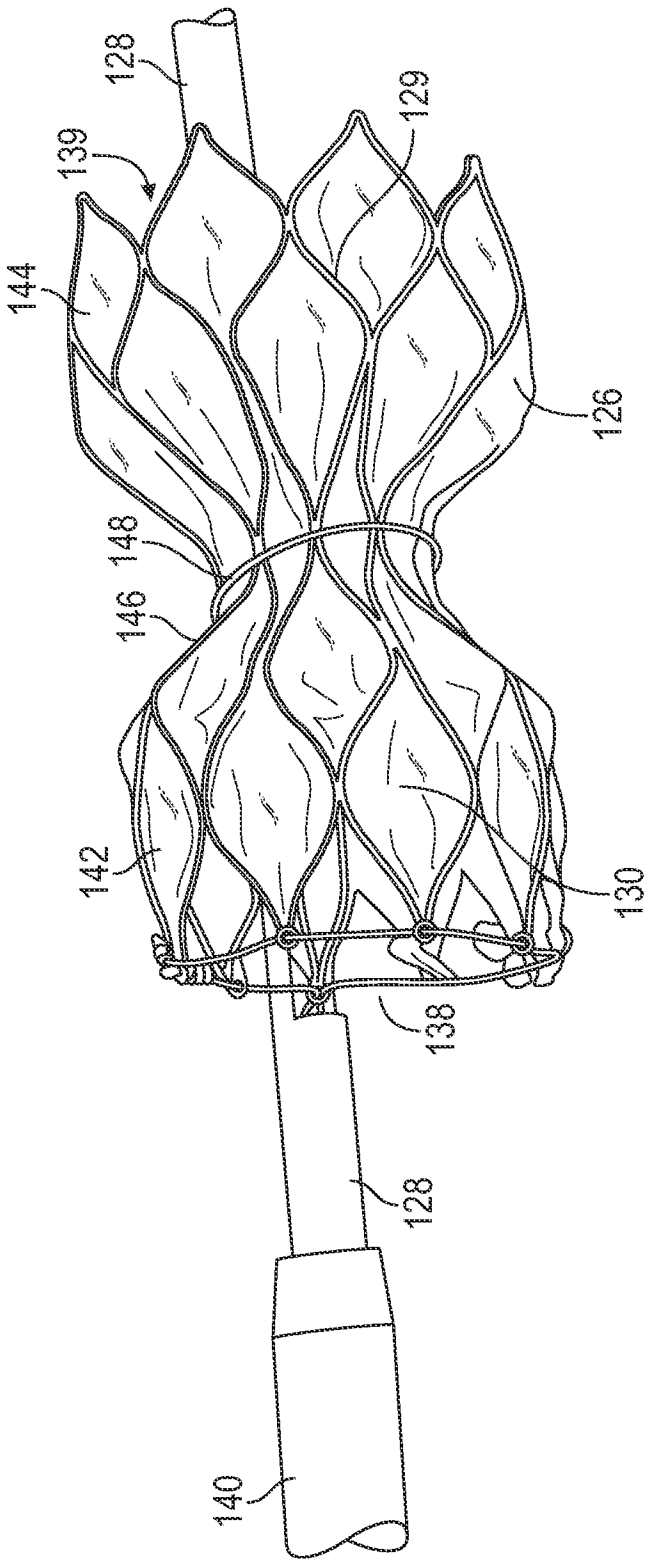

FIG. 3

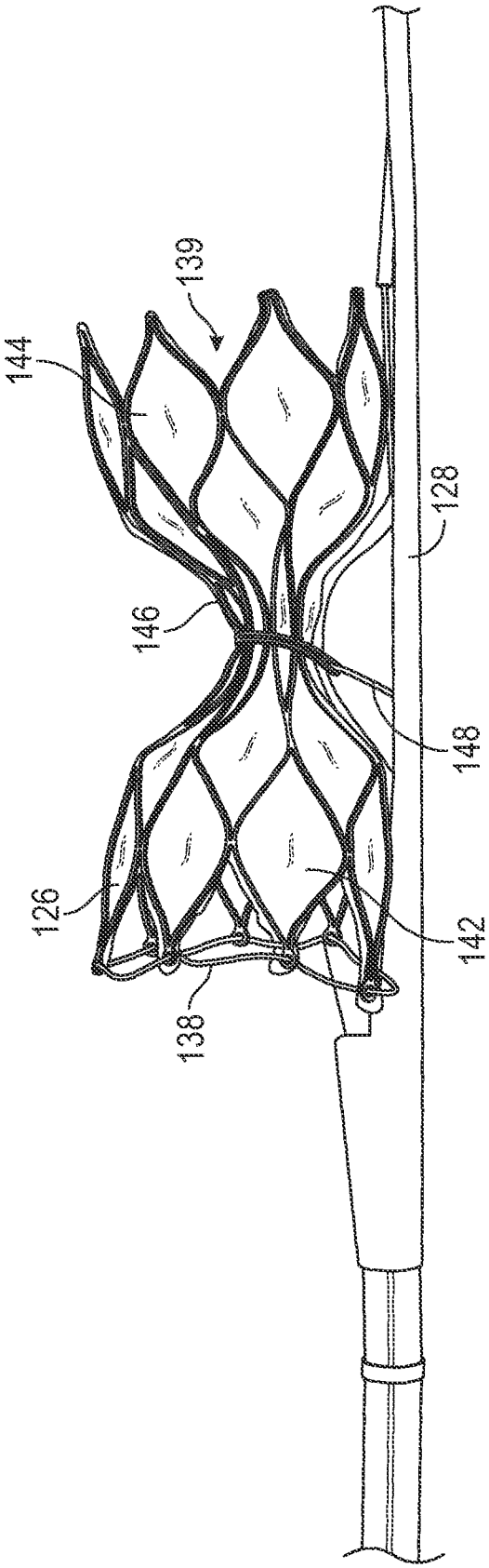

FIG. 4

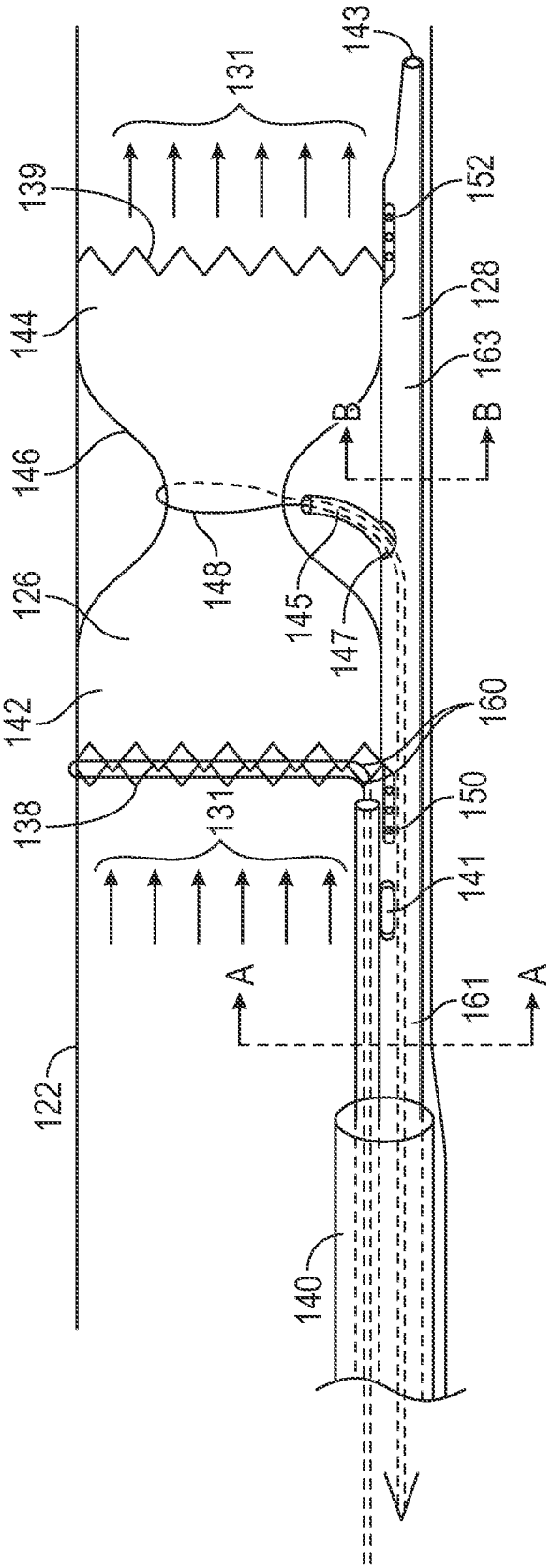
143
131
139
152
144
128
163
B
B
146
148
145
147
126
142
160
138
131
150
141
A
A
161
122
140

FIG. 5

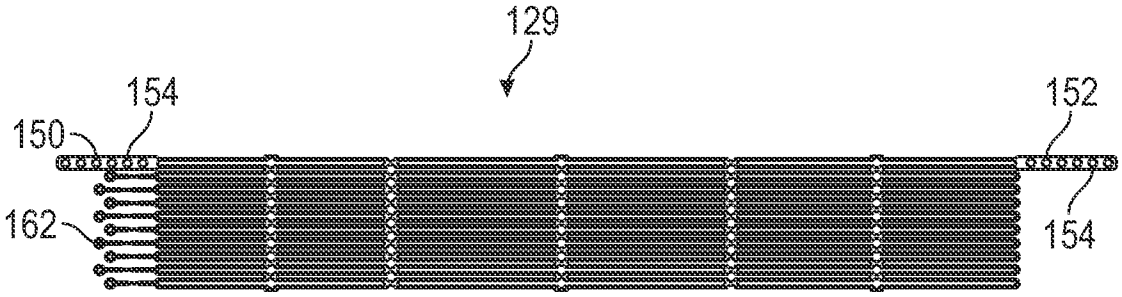

FIG. 6A

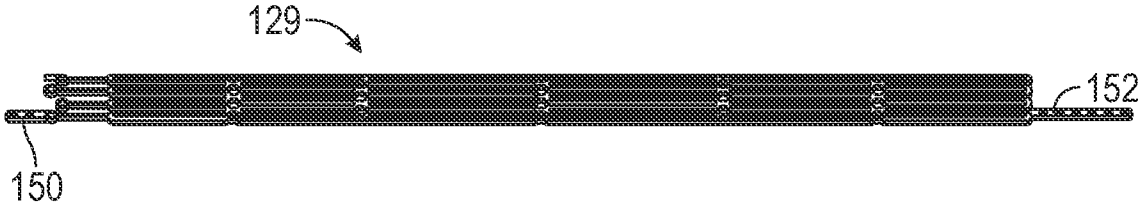

FIG. 6B

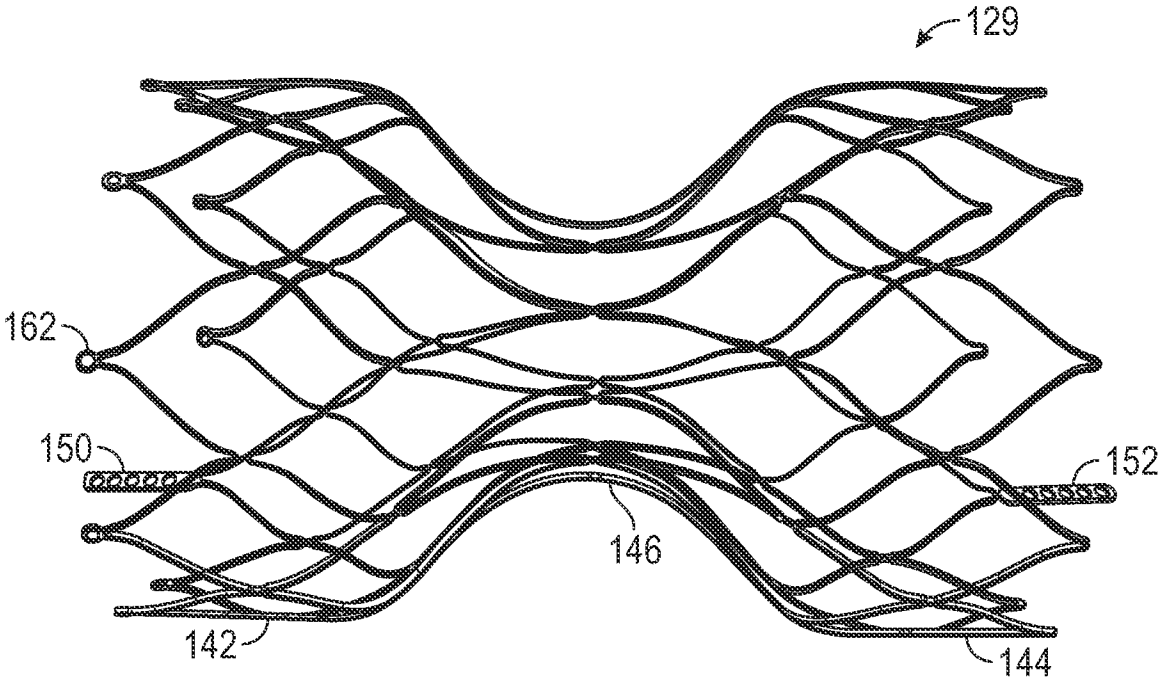

FIG. 6C

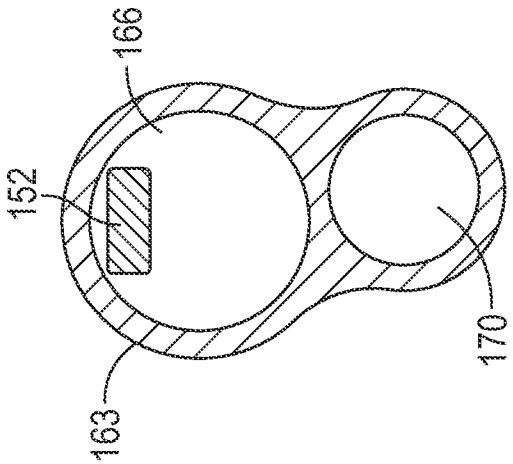

FIG. 8

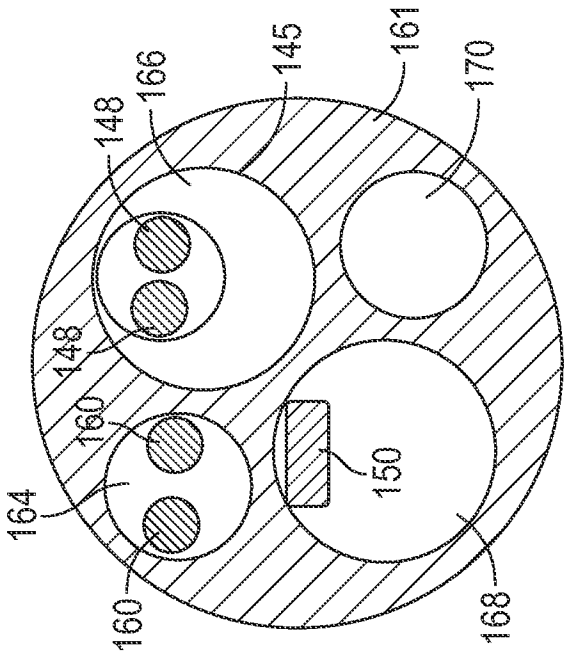

FIG. 7

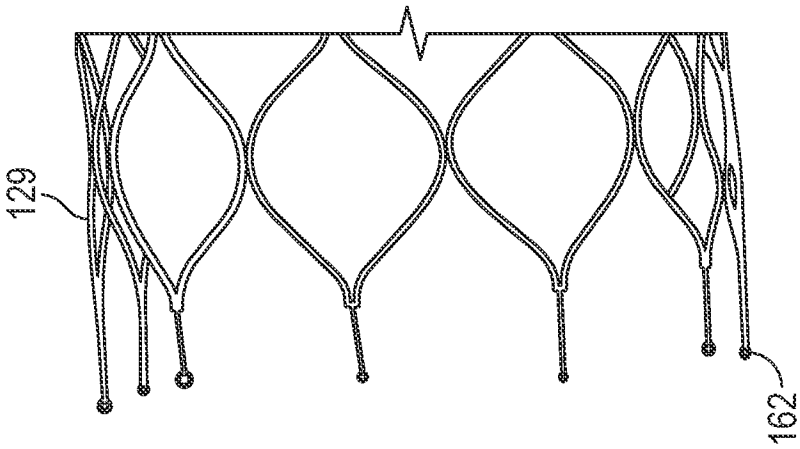

FIG. 6D

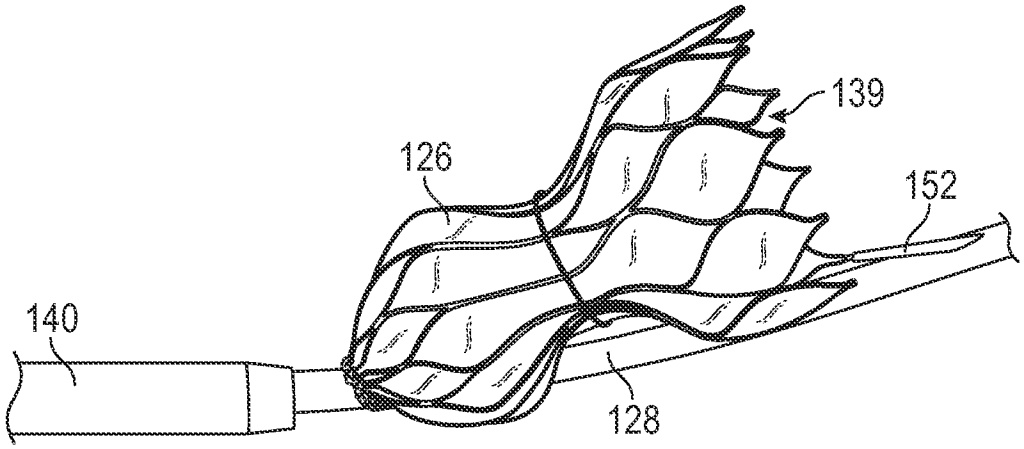

FIG. 9A

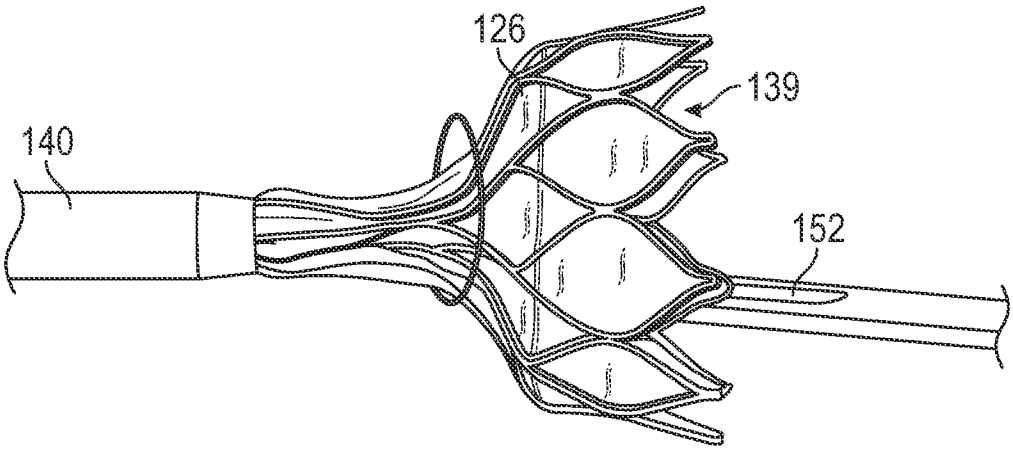

FIG. 9B

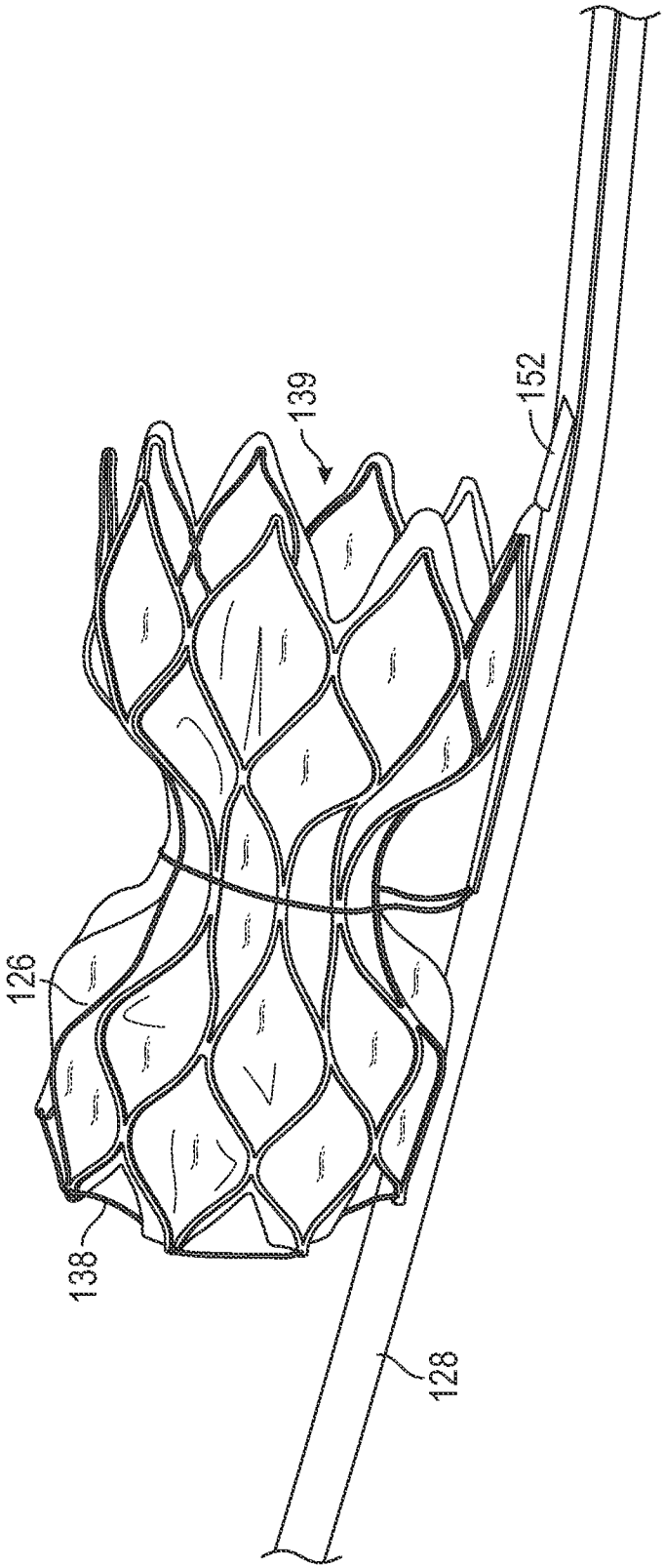

FIG. 10

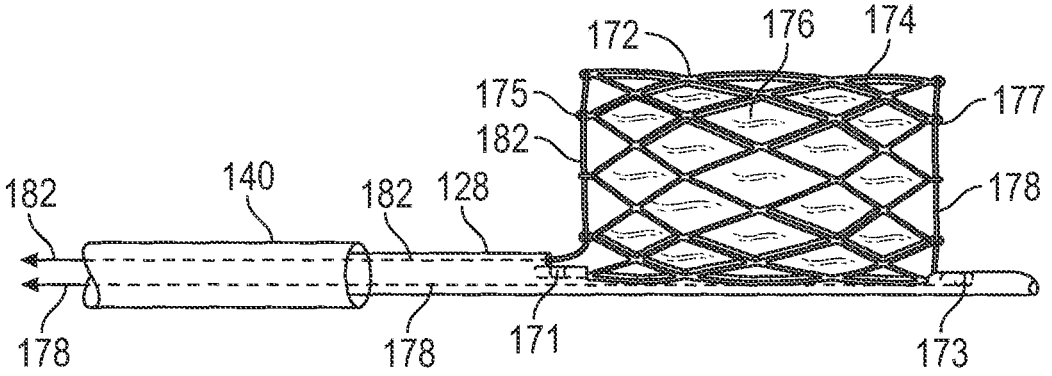
172
176
174
175
177
182
182
140
182
128
178
178
178
171
173

FIG. 11

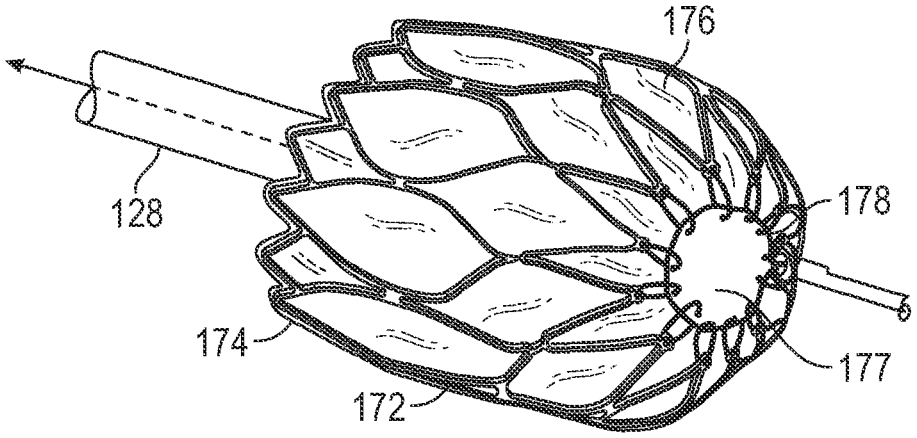
176
128
178
174
177
172

FIG. 12

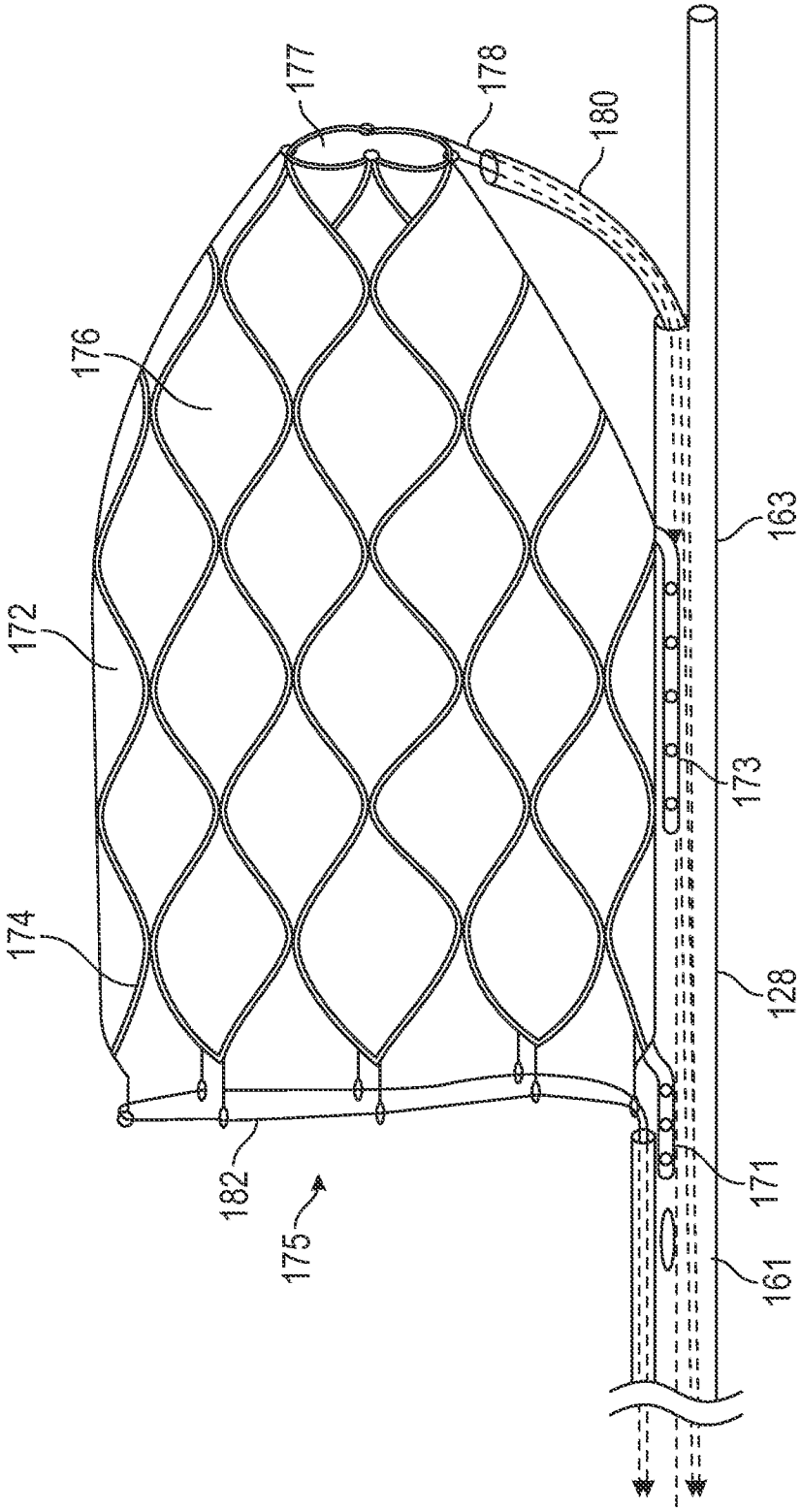

FIG. 13

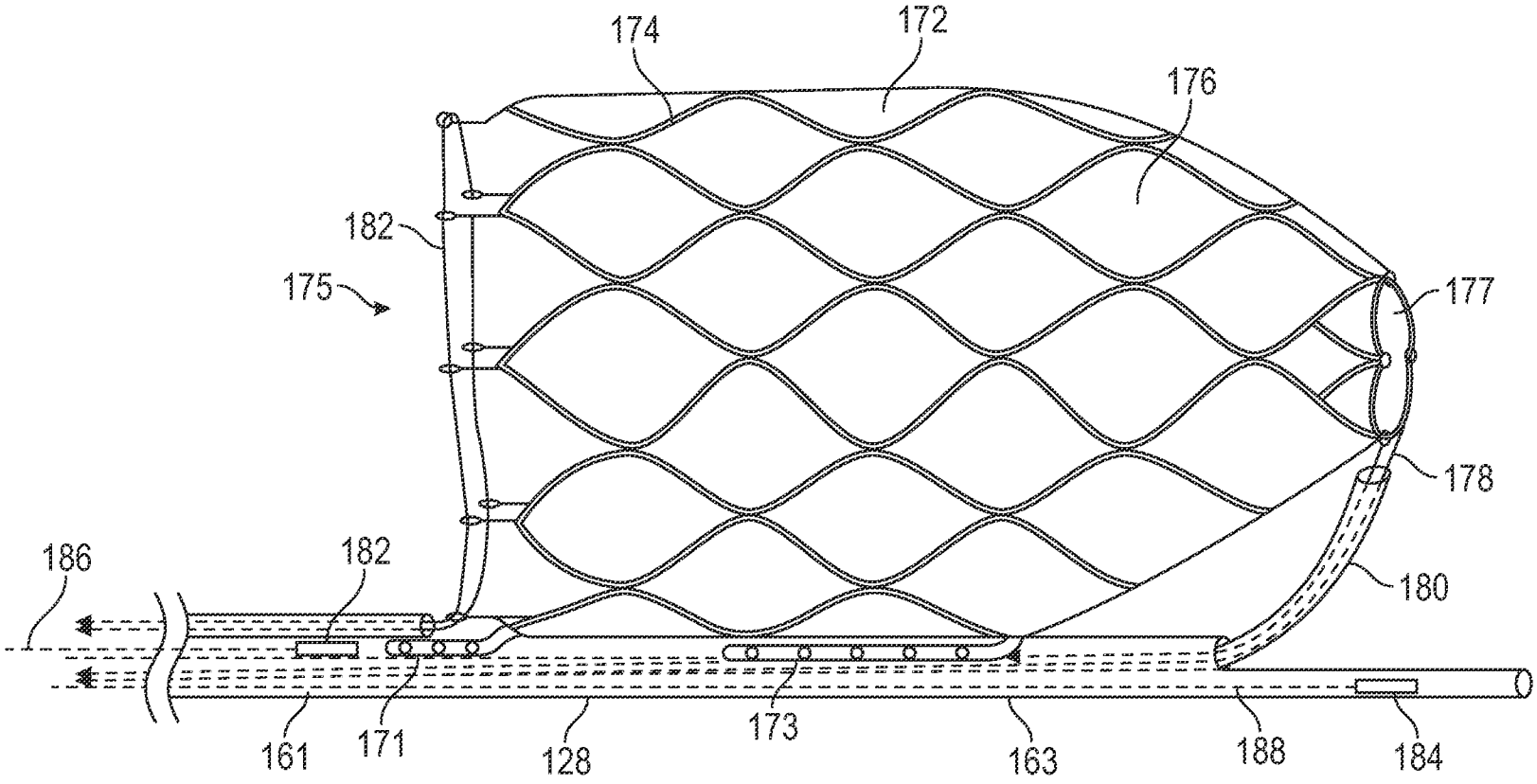
174
172
176
182
175
177
178
186
182
180
161
171
128
173
163
188
184

FIG. 14A

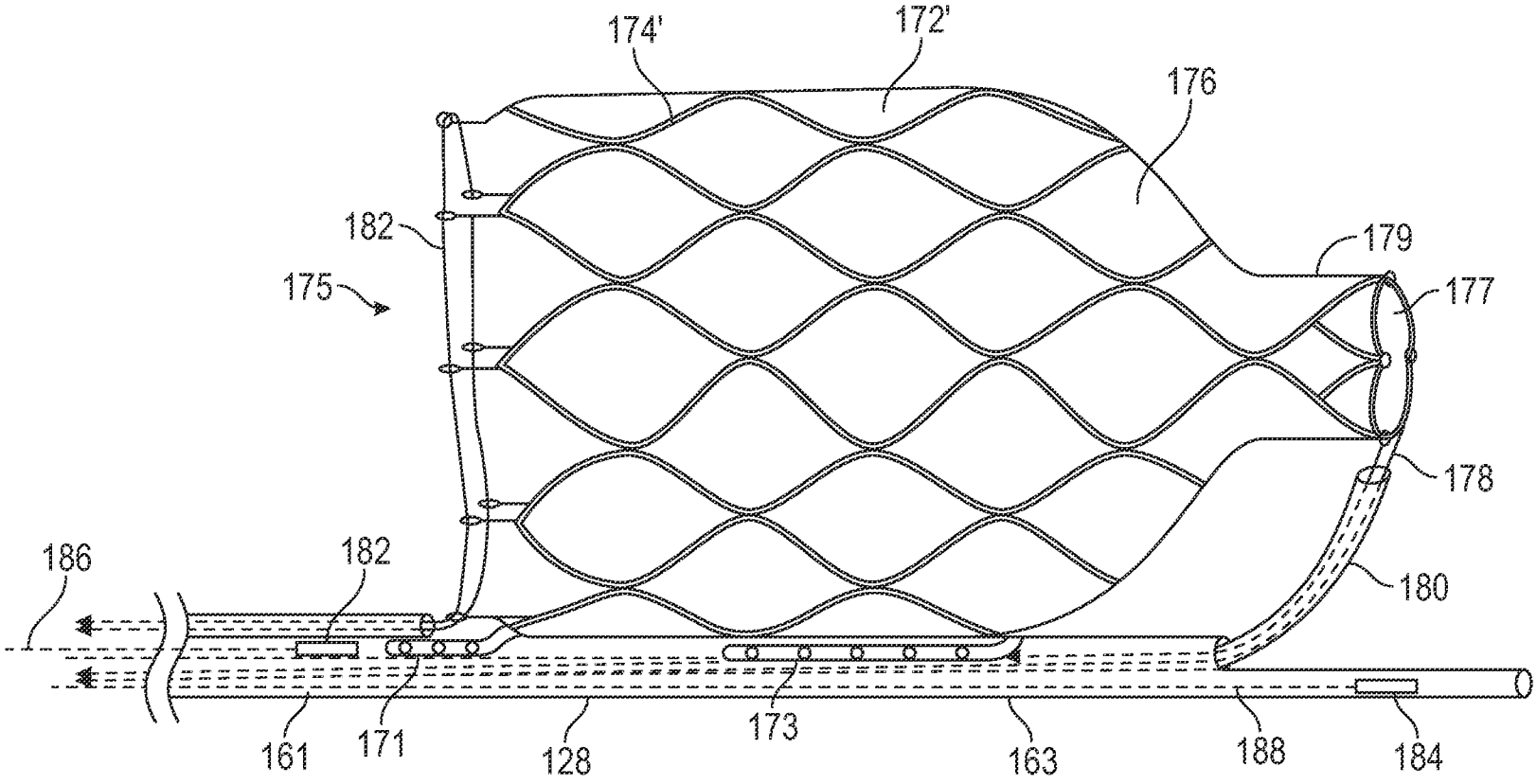
174'
172'
176
182
175
179
177
178
186
182
180
161
171
128
173
163
188
184

FIG. 14B

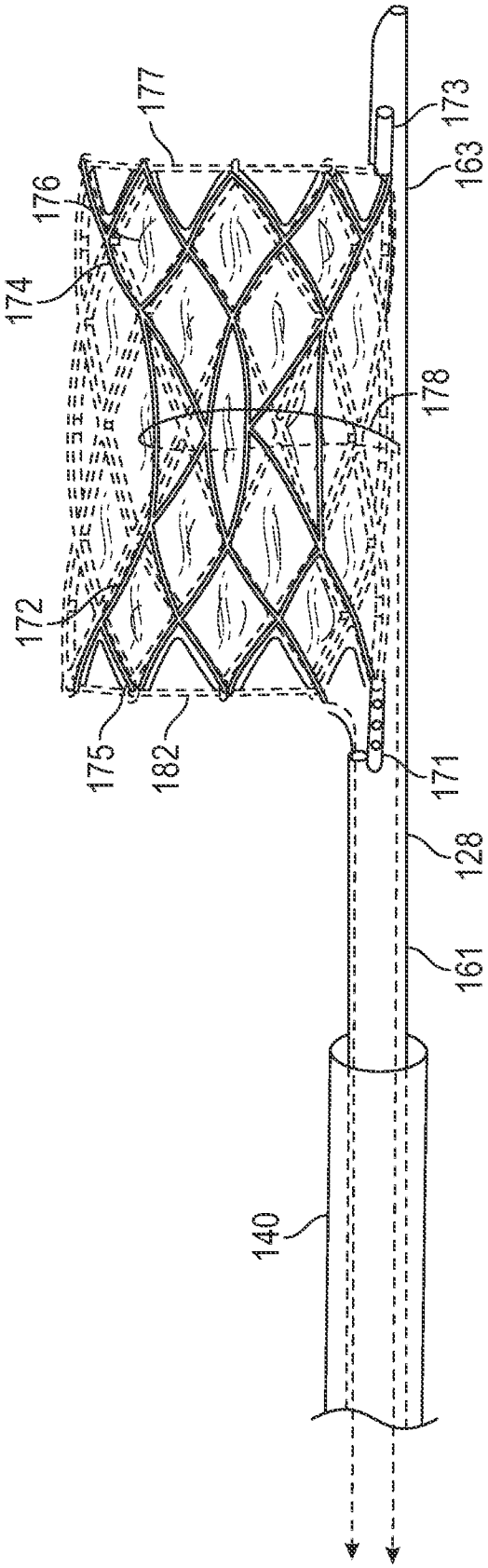

FIG. 15

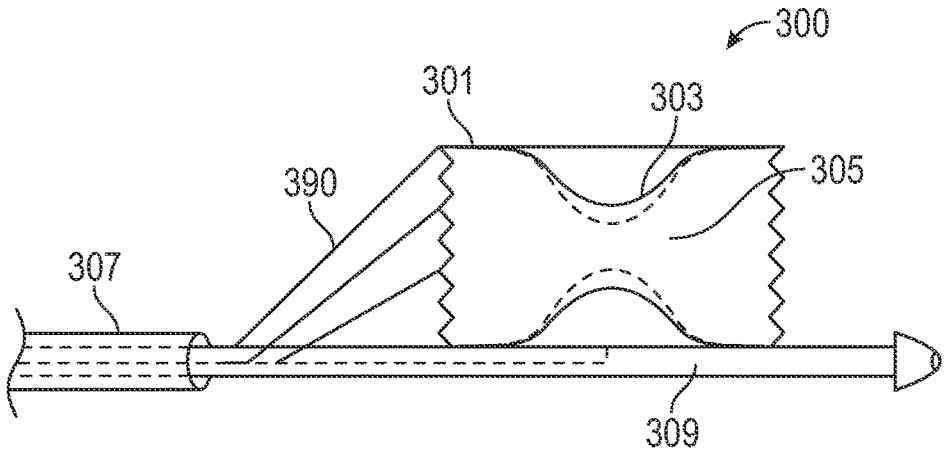

FIG. 16

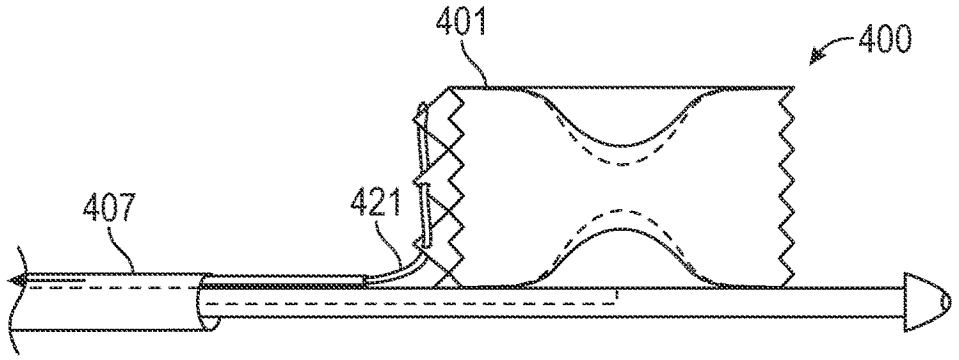

FIG. 17

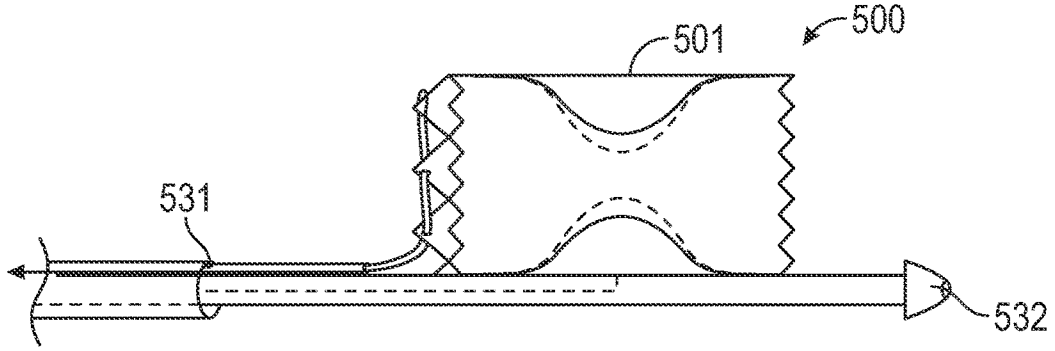

FIG. 18

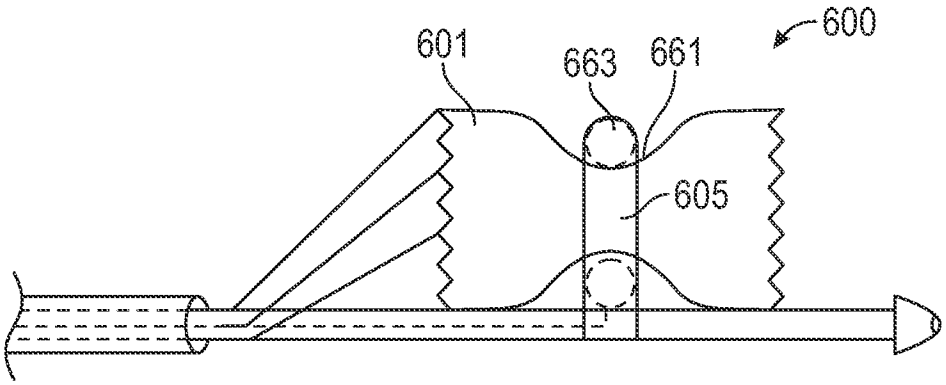

FIG. 19

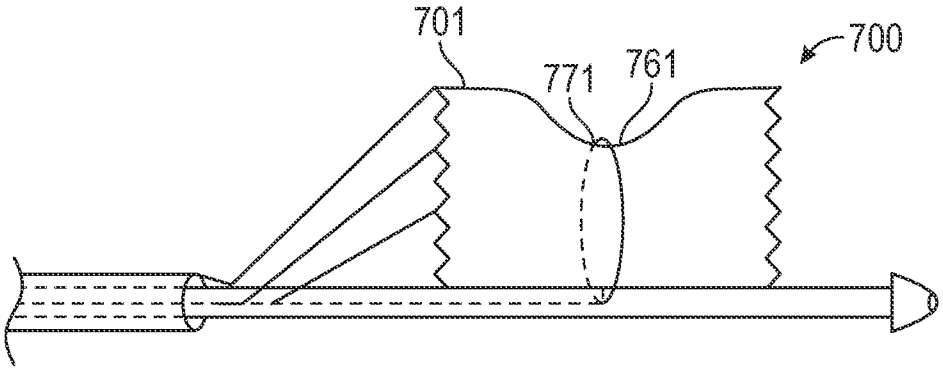

FIG. 20

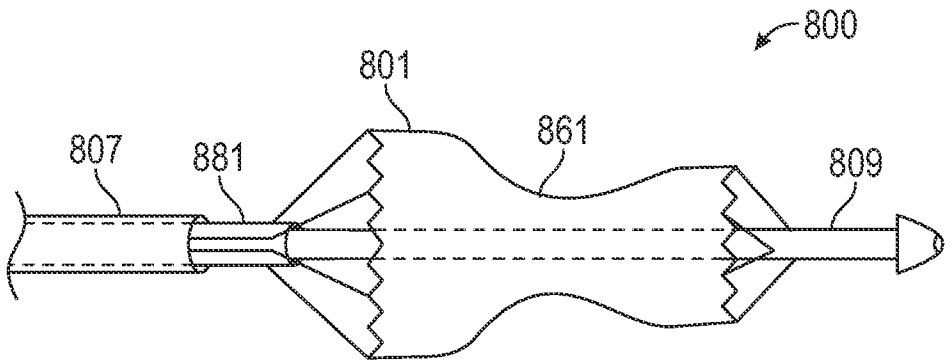

FIG. 21

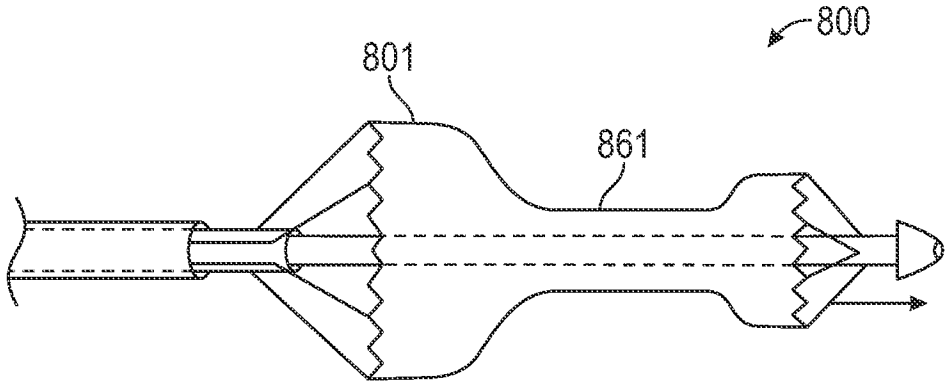

FIG. 22

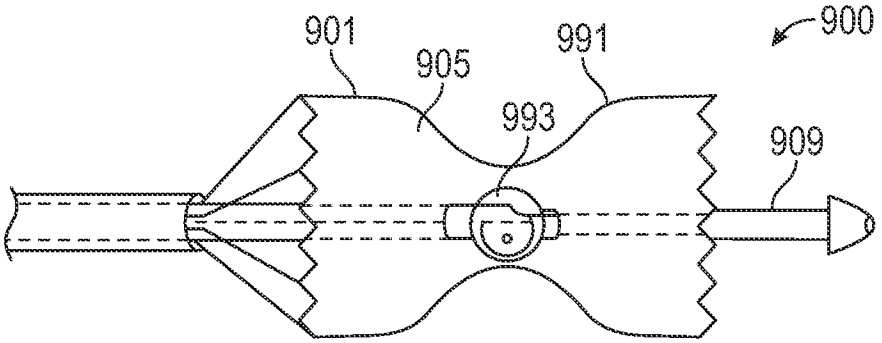

FIG. 23

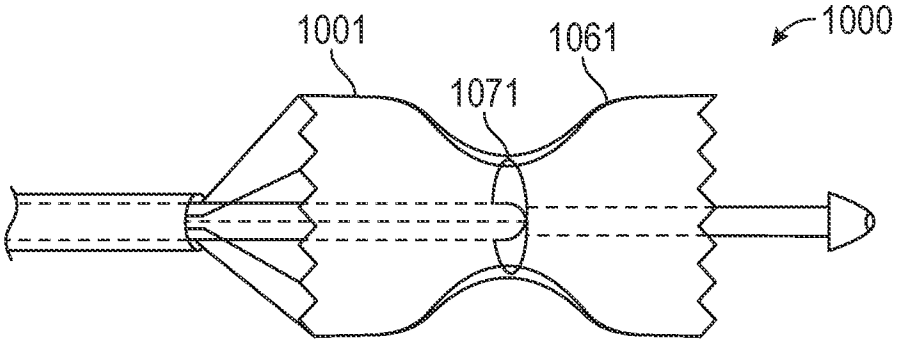

FIG. 24

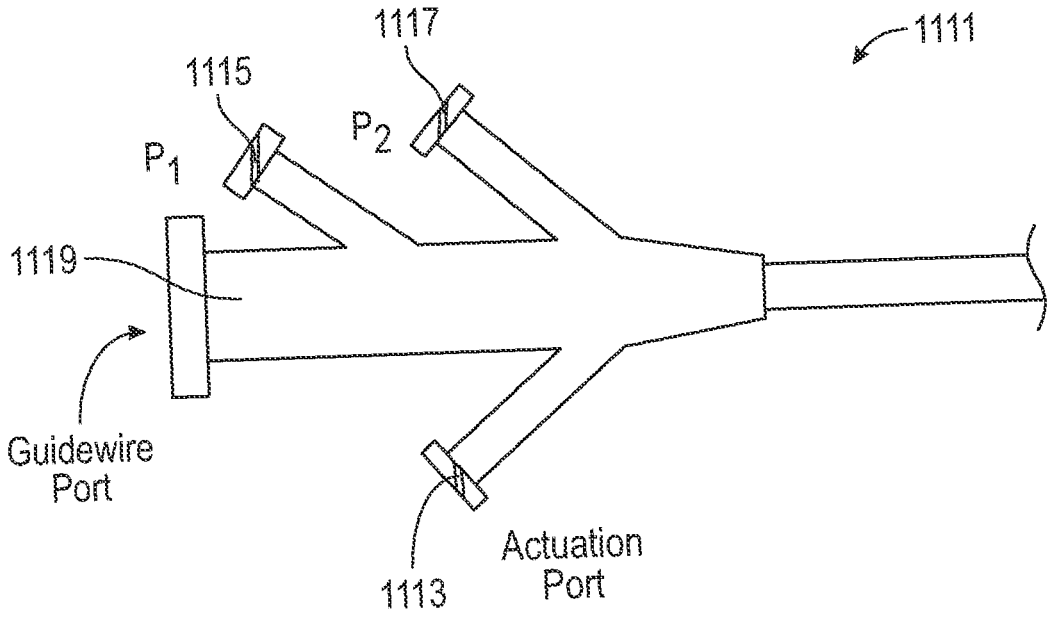
1111
1117
1115
P2
P1
1119
Guidewire
Port
1113
Actuation
Port

FIG. 25

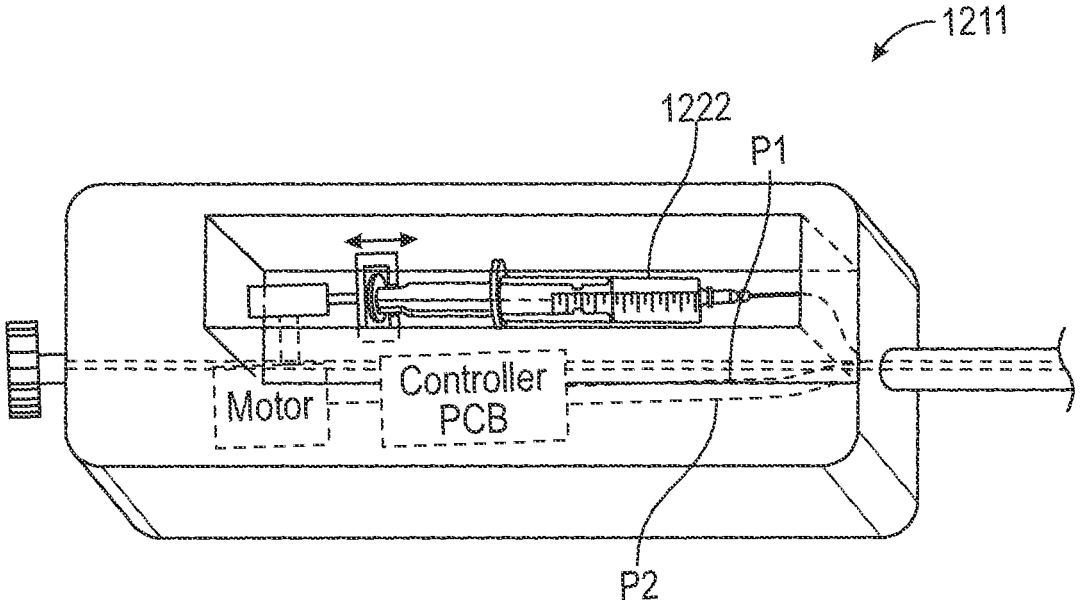
1211
1222
P1
Motor
Controller
PCB
P2

FIG. 26

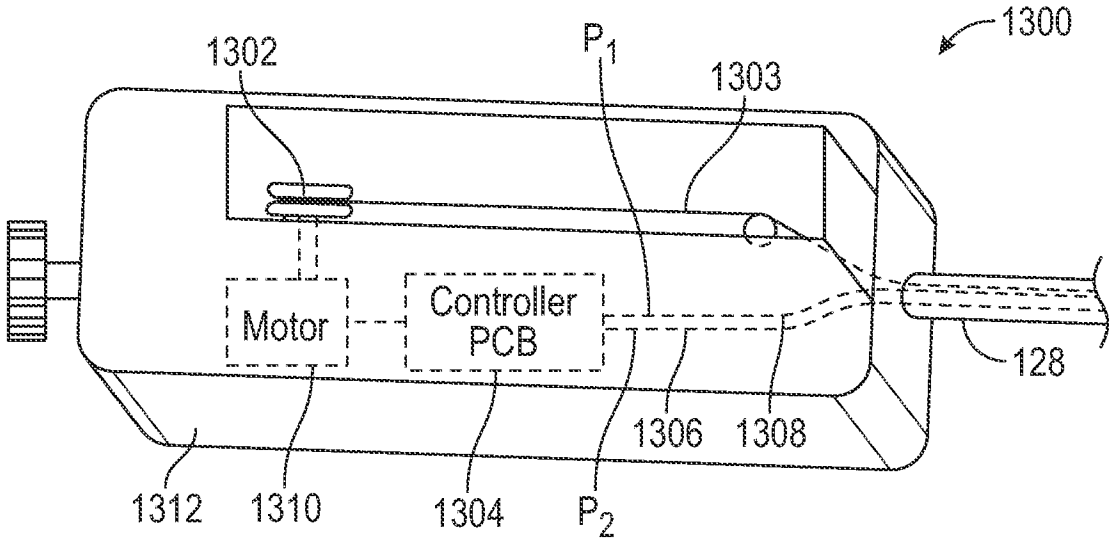
1300
1302
P1
1303
Motor
Controller PCB
128
1306
1308
1312
1310
1304
P2

FIG. 27

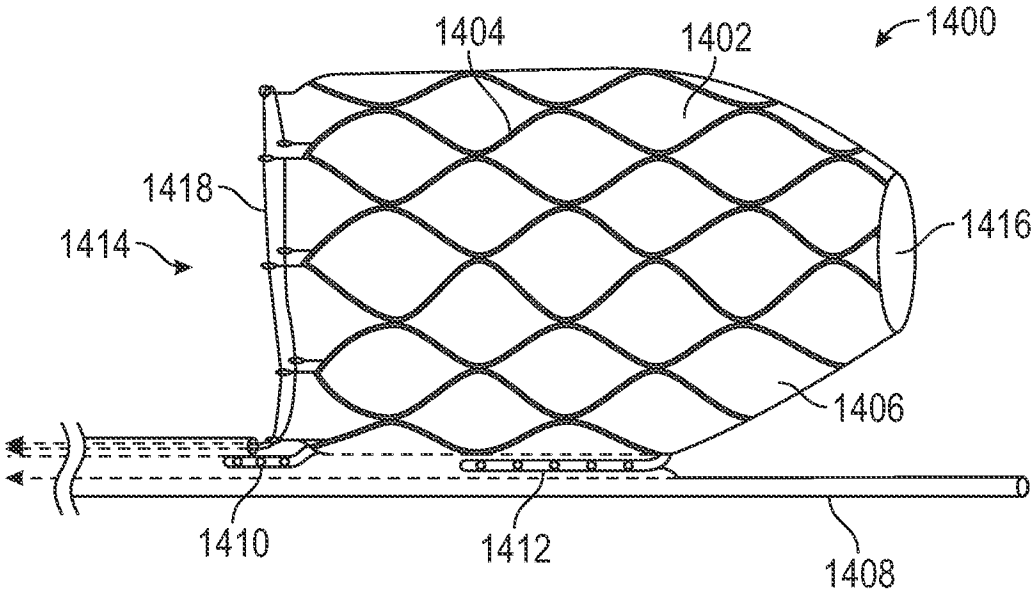
1400
1404
1402
1418
1414
1416
1406
1410
1412
1408

FIG. 28

DEVICE AND METHOD FOR VARIABLE BLOOD FLOW OCCLUSION

CROSS REFERENCE TO RELATED APPLICATIONS

This application is a continuation of U.S. patent application Ser. No. 17/692,007, filed Mar. 10, 2022, which claims the benefit of U.S. Application No. 63/160,637, filed Mar. 12, 2021, the disclosure of which is incorporated herein by reference in its entirety.

INCORPORATION BY REFERENCE

All publications and patent applications mentioned in this specification are herein incorporated by reference in their entirety to the same extent as if each individual publication or patent application was specifically and individually indicated to be incorporated by reference.

BACKGROUND

In patients with heart failure, reduced cardiac output can lead to reduced renal perfusion, which in turn can cause decreased urine output, activation of the sympathetic nervous system, and other neurohormonal changes. These compensatory mechanisms may occur in an attempt by the body to increase the blood volume to help maintain cardiac output. However, the increased blood volume can be detrimental, particularly because it increases venous pressure. The increased venous pressure can cause, for example, pulmonary and systemic edema or venous congestion. Higher venous pressure can also make it more difficult for the kidneys to function to remove fluid.

Increased venous pressure, or increased preload on the right heart, is thus detrimental to the recovery of heart failure patients. Accordingly, decreasing preload on the right heart is desired, as decreased preload lowers the cardiac filling pressure and increases cardiac output. Decreased venous pressure can also decrease renal vein pressure, increasing the pressure differential across the kidneys, which may enhance diuresis of the patient.

Many patients in heart failure are treated with diuretic drugs to reduce blood volume and venous pressure in order to reduce edema, but diuretic drugs are frequently ineffective, especially in patients with renal dysfunction or diuretic resistance. Device-based therapies have also been proposed, including devices that expand within a blood vessel, such as the inferior vena cava or the superior vena cava, to partially occlude the blood vessel for an extended time or to completely occlude the blood vessel for a short time.

SUMMARY OF THE DISCLOSURE

Described herein is a catheter-based blood flow control device that can be placed either in the superior vena cava (SVC) to decrease blood flow returning from the head and upper extremities or in the inferior vena cava (IVC) in an infrarenal location in order to decrease blood flow returning from the lower extremities. The device can restrict blood flowing in the antegrade direction, resulting in a higher pressure on the inflow (proximal) side and a lower pressure on the outflow (distal) side.

One aspect of the invention provides a blood flow control device having a catheter adapted to be advanced into a blood vessel to a blood flow control site within the blood vessel; an expandable anchor supported by the catheter, the expandable anchor being adapted to expand to engage a wall of the blood vessel, the expandable anchor including a blood impermeable wall defining an adjustable blood flow path extending through the expandable anchor from a proximal opening to a distal opening, the catheter being disposed outside of the adjustable blood flow path; a flow control element supported by the catheter, the flow control element being adapted to change a dimension of the adjustable blood flow path to change a rate of blood flow through the blood flow path; and a blood flow control actuator disposed at a proximal section of the catheter and adapted to actuate the flow control element. In some embodiments, the flow control element is adapted to change a shape of the adjustable blood flow path.

In some embodiments, the flow control element is adapted to change a shape of the expandable anchor. In some such embodiments, the flow control element includes a cinching line extending proximally from the expandable anchor and adapted to reduce a diameter of at least a portion of the expandable anchor. The cinching line may optionally extend from the actuator through a lumen of the catheter to an exit port on an exterior side of the catheter. In various embodiments, the flow control element is adapted to change a shape of a central portion of the expandable anchor, a shape of a distal portion of the expandable anchor, and/or a shape of a proximal portion of the expandable anchor.

In some or all of these embodiments, the flow control element is supported by the catheter outside of the adjustable blood flow path.

In some embodiments, the expandable anchor is disposed on an exterior side of the catheter at a distal section of the catheter such that the catheter is outside of the anchor. In some such embodiments, the blood flow control device also includes a sliding connector between the expandable anchor and the catheter adapted to permit at least one end of the expandable anchor to move longitudinally with respect to the catheter when the expandable anchor expands or collapses. A sliding connector may be disposed at a proximal end of the expandable anchor, at a distal end of the expandable anchor, or both.

In some embodiments, the expandable anchor includes a self-expandable stent or scaffold. In some embodiments, the blood impermeable wall includes a blood impermeable covering disposed on at least one of an interior surface and an exterior surface of the expandable anchor and surrounding the adjustable blood flow path.

Some embodiments also include an anchor collapse control element supported by the catheter and adapted to reduce a dimension of the expandable anchor to facilitate placement of the expandable anchor in a sheath. The anchor collapse control element may be supported by the catheter outside of the adjustable blood flow path. Some embodiments may also include an anchor collapse actuator disposed at a proximal section of the catheter and adapted to actuate the anchor collapse control element. The anchor collapse control element may be adapted to reduce a cross-sectional dimension of a proximal end of the expandable anchor. In some embodiments, the anchor collapse control element includes a line slidingly disposed in a plurality of loops on the proximal end of the expandable anchor and extending proximally through a lumen of the catheter, and the loops may optionally be integral with the expandable anchor. Some embodiments also include a second anchor collapse control element supported by the catheter and adapted to reduce a cross-sectional dimension of a distal end of the expandable

anchor. The second anchor collapse control element may be supported by the catheter outside of the adjustable blood flow path.

Some embodiments of the invention also include a first pressure sensor adapted to measure a pressure distal to the adjustable blood flow path and a second pressure sensor adapted to measure a pressure proximal to the adjustable blood flow path. Some such embodiments may also have a pressure port disposed on the catheter distal to the adjustable blood flow path and a lumen extending from the pressure port through the catheter to the first pressure sensor and/or a pressure port disposed on the catheter proximal to the adjustable blood flow path and a lumen extending from the pressure port through the catheter to the second pressure sensor. In some embodiments, the first pressure sensor may be supported by the catheter distal to the distal opening of the adjustable blood flow path, and the second pressure sensor is supported by the catheter proximal to the proximal opening of the adjustable blood flow path. Some embodiments also include a processor configured to operate the blood flow control actuator to actuate the flow control element based on pressures sensed by the first pressure sensor and the second pressure sensor.

Another aspect of the invention provides a method of controlling a blood flow rate in a blood vessel. In some embodiments, the method includes the steps of advancing a catheter and an expandable anchor into the blood vessel; expanding the anchor in the blood vessel into contact with an inner wall of the blood vessel, the anchor having a blood impermeable wall defining an adjustable blood flow path extending through the anchor from a proximal opening to a distal opening, the catheter being disposed outside of the adjustable blood flow path; allowing blood to flow from the blood vessel into the adjustable blood flow path through the anchor; and changing a dimension of the adjustable blood flow path, thereby changing a rate of blood flow through the adjustable blood flow path.

In some embodiments, the step of changing a dimension of the adjustable blood flow path includes the step of changing a shape of the anchor by, e.g., compressing a self-expandable portion of the anchor and/or releasing a compression force on a self-expandable portion of the anchor.

The step of changing the shape of the anchor could also include the step of actuating a flow control element to change a force applied to the blood flow control device, the flow control element being disposed outside of the adjustable blood flow path. In some embodiments, the flow control element includes a cinching line supported by the catheter outside of the adjustable blood flow path extending proximally from the anchor, and the step of actuating the flow control element includes the step of changing a cinching force applied to the anchor by the cinching line. The cinching line may optionally engage a central portion of the anchor, and the step of changing the shape of the anchor may then include the step of changing a shape of the central portion. Alternatively or additionally, the cinching line may optionally engage a distal portion of the anchor, and the step of changing the shape of the anchor may include the step of changing a shape of the distal portion. Alternatively or additionally, the cinching line may optionally engage a proximal portion of the anchor, and the step of changing the shape of the anchor may include the step of changing a shape of the proximal portion.

In embodiments in which the anchor includes a self-expandable scaffold or stent, the advancing step may include the step of advancing the catheter within a delivery sheath, and the expanding step may include the step of moving the catheter and the delivery sheath with respect to each other to allow the scaffold to self-expand. Some such embodiments may also include the step of collapsing the anchor and disposing the delivery sheath around the anchor. The step of collapsing the anchor may also include the step of compressing a proximal end of the anchor prior to disposing the delivery sheath around the anchor. The step of collapsing the anchor may also include the step of compressing a distal end of the anchor. The step of collapsing the anchor may also include the step of actuating an anchor collapse control element, and the anchor collapse control element may optionally be supported by the catheter outside of the adjustable blood flow path.

Some embodiments also include the steps of measuring a first pressure in the blood vessel proximal to the anchor and a second pressure in the blood vessel distal to the anchor and changing a dimension of the adjustable blood flow path based on difference between the first pressure and the second pressure. In some embodiments, the step of expanding the anchor may include the step of moving an end of the anchor longitudinally with respect to the catheter.

Yet another aspect of the invention provides a blood flow control device having a catheter adapted to be advanced into a blood vessel to a blood flow control site within the blood vessel; and an expandable anchor supported by the catheter, the expandable anchor being adapted to expand to engage a wall of the blood vessel, the expandable anchor having a blood impermeable wall defining a blood flow path extending through the expandable anchor from a proximal opening to a distal opening and a reduced flow area portion in the blood flow path, the catheter being disposed outside of the blood flow path.

In some embodiments, the reduced flow area portion of the expandable anchor is disposed at the distal opening such that the distal opening has a smaller open area than an open area of the proximal opening. In some embodiments, the reduced flow area portion of the expandable anchor is disposed between the proximal opening and the distal opening.

In some embodiments, the expandable anchor is disposed on an exterior side of the catheter at a distal section of the catheter such that the catheter is outside of the anchor. Some embodiments also include a sliding connector between the expandable anchor and the catheter adapted to permit at least one end of the expandable anchor to move longitudinally with respect to the catheter when the expandable anchor expands or collapses. The sliding connector may be disposed at a proximal end and/or at a distal end of the expandable anchor.

In some embodiments, the expandable anchor has a self-expandable scaffold. In some embodiments, the blood impermeable wall includes a blood impermeable covering disposed on at least one of an interior surface and an exterior surface of the expandable anchor and surrounding the adjustable blood flow path.

Some embodiments include an anchor collapse control element supported by the catheter and adapted to reduce a dimension of the expandable anchor to facilitate placement of the expandable anchor in a sheath. The anchor collapse control element may be supported by the catheter outside of the adjustable blood flow path. Some embodiments may also include an anchor collapse actuator disposed at a proximal section of the catheter and adapted to actuate the anchor collapse control element. In some embodiments, the anchor collapse control element is adapted to reduce a cross-sectional dimension of a proximal end of the expandable

anchor. The anchor collapse control element may include a line slidingly disposed in a plurality of loops on the proximal end of the expandable anchor and extending proximally through a lumen of the catheter, and the loops optionally be integral with the expandable anchor.

Still another aspect of the invention provides a method of reducing a blood flow rate in a blood vessel. In some embodiments, the method includes the steps of advancing a catheter and an expandable anchor into the blood vessel; expanding the anchor in the blood vessel into contact with an inner wall of the blood vessel, the anchor having a blood impermeable wall defining a blood flow path extending through the anchor from a proximal opening to a distal opening and a reduced flow area portion in the blood flow path, the catheter being disposed outside of the adjustable blood flow path; and allowing blood to flow from the blood vessel into the proximal opening and through the blood flow path and the distal opening, thereby reducing the blood flow rate in the blood vessel.

In some embodiments, the reduced flow area portion of the expandable anchor is disposed at the distal opening such that the distal opening has a smaller open area than an open area of the proximal opening. In some embodiments, the reduced flow area portion of the expandable anchor is disposed between the proximal opening and the distal opening.

In some embodiments, the anchor includes a self-expandable scaffold, and the advancing step includes the step of advancing the catheter within a delivery sheath, the expanding step including the step of moving the catheter and the delivery sheath with respect to each other to allow the scaffold to self-expand. Some embodiments also include the steps of collapsing the anchor and disposing the delivery sheath around the anchor. Some embodiments also include the step of compressing a proximal end of the anchor prior to disposing the delivery sheath around the anchor. The step of collapsing the anchor may include the step of actuating an anchor collapse control element. The anchor collapse control element may be supported by the catheter outside of the adjustable blood flow path.

Some embodiments include the step of measuring a first pressure in the blood vessel proximal to the anchor and a second pressure in the blood vessel distal to the anchor. In some embodiments, the expanding step includes the step of moving an end of the anchor longitudinally with respect to the catheter.

BRIEF DESCRIPTION OF THE DRAWINGS

The novel features of the invention are set forth with particularity in the claims that follow. A better understanding of the features and advantages of the present invention will be obtained by reference to the following detailed description that sets forth illustrative embodiments, in which the principles of the invention are utilized, and the accompanying drawings of which:

FIG. **1** shows an exemplary blood flow control device located in the SVC.

FIG. **2** shows an exemplary blood flow control device located in the IVC.

FIG. **3** is a perspective view of the blood flow control device shown in FIG. **2** in an expanded configuration.

FIG. **4** is a perspective view of the blood flow control device of FIG. **3** in a cinched configuration to change the blood flow path.

FIG. **5** is a side schematic view of the blood flow control device of FIG. **3**.

FIG. **6**A is a flat plan of a stent serving as a scaffold in the anchor of the blood flow control device of FIG. **3**.

FIG. **6**B is a side view of the stent of FIG. **6**A in a compressed configuration.

FIG. **6**C is a perspective view of the stent of FIGS. **6**A and **6**B in an expanded configuration.

FIG. **6**D is a perspective view of a proximal portion of the stent of FIGS. **6**A-C.

FIG. **7** is a cross-sectional view of the catheter of the blood flow control device of FIG. **5** taken along the line A-A.

FIG. **8** is a cross-sectional view of the catheter of the blood flow control device of FIG. **5** taken along the line B-B.

FIG. **9**A is a perspective view showing the collapse of the proximal end of the anchor of the blood flow control device of FIG. **3** prior to retrieval into a delivery sheath.

FIG. **9**B is a perspective view showing retrieval of the anchor of the blood flow control device of FIG. **3** into the delivery sheath.

FIG. **10** is a perspective view of the blood flow control device of FIG. **3**.

FIG. **11** is a side view of another embodiment of a blood flow control device.

FIG. **12** is a perspective view of the blood flow control device of FIG. **11** showing a reduced distal opening.

FIG. **13** is a perspective view of yet another embodiment of a blood flow control device.

FIG. **14**A is a perspective view of still another embodiment of a blood flow control device.

FIG. **14**B is a perspective view of another embodiment of a blood flow control device.

FIG. **15** is a side view of yet another embodiment of a blood flow control device.

FIG. **16** is a side view of still another embodiment of a blood flow control device.

FIG. **17** is a side view of another embodiment of a blood flow control device.

FIG. **18** is a side view of yet another embodiment of a blood flow control device.

FIG. **19** is a side view of still another embodiment of a blood flow control device.

FIG. **20** is a side view of another embodiment of a blood flow control device.

FIG. **21** is a side view of yet another embodiment of a blood flow control device.

FIG. **22** is a side view of the embodiment of FIG. **21** in a reduced blood flow path configuration.

FIG. **23** is a side view of still another embodiment of a blood flow control device.

FIG. **24** is a side view of another embodiment of a blood flow control device.

FIG. **25** is a side view of a handle for use with a blood flow control device.

FIG. **26** is a perspective view of another handle for use with a blood flow control device.

FIG. **27** is a perspective view of yet another handle for use with a blood flow control device.

FIG. **28** is a perspective view of another embodiment of a blood flow control device.

DETAILED DESCRIPTION

Described herein are catheter-based blood flow occlusion devices that can be placed either in the SVC to decrease blood flow returning from the head and upper extremities or placed in the IVC in an infrarenal location in order to decrease blood flow returning from the lower extremities. The devices can restrict blood flowing in the antegrade

direction, resulting in a higher pressure on the inflow (proximal) side and a lower pressure on the outflow side, distal to the device.

For example, FIG. **1** shows an exemplary blood flow control device **100** disposed in the SVC **102** above the right atrium **104** of the patient's heart. Device **100** has an expandable anchor **106** supported by a catheter **108**. Anchor **106** expands to engage the inside wall of the blood vessel (e.g., the SVC). In the illustrated embodiment, anchor **106** has a scaffold formed as a self-expandable stent **109** covered by a blood impermeable covering **110** to define a blood flow path (illustrated by arrows **111**) extending from proximal opening **112** to and through a distal opening **114**. A reduced diameter portion **116** of the anchor creates at least a partial occlusion to blood flow through the device by reducing the area through which the blood is flowing.

FIG. **2** shows a blood flow control device **120** similar to that of FIG. **1** in the IVC **122**, e.g., just below the renal veins **124**. As in device **100**, device **120** has an expandable anchor **126** supported by a catheter **128**. Anchor **126** expands to engage the inside wall of the blood vessel (e.g., the SVC). In the illustrated embodiment, anchor **126** has a scaffold formed as a self-expandable stent **129** covered by a blood impermeable covering **130** to define a blood flow path (illustrated by arrows **131**) extending from proximal opening **132** to and through a distal opening **134**. A reduced diameter portion **136** of the anchor creates at least a partial occlusion to blood flow through the device by reducing the area through which the blood is flowing.

The blood flow control devices described herein can include an expandable and compressible anchor that, in its expanded state, can accommodate a range of IVC or SVC diameters and seal against the IVC or SVC. In some embodiments, for example, the anchor can have an expanded diameter of 20-30 mm. The blood flow control devices described herein can further be compressible to a small enough diameter to be inserted via an introducer sheath placed in a peripheral vein, for instance inserted into the subclavian vein (for placement in the SVC location) or into the femoral vein (for placement in the IVC location).

The blood flow control devices described herein can have a non-thrombogenic surface on their inside diameter. In some embodiments, the flow occlusion devices can have minimal or no stent wires and/or no catheter shaft within the flow lumen in order to decrease the risk of thrombus forming on the device.

In some embodiments, the blood flow control devices described herein can be cylindrical. In other embodiments, the flow occlusion devices can have a narrowed location along their length in order to decrease the flow rate therethrough.

The blood flow control devices described herein can have a blood flow control element configured to vary the flow rate through the device, such as from fully open to partially or fully closed.

The blood flow control devices described herein can be configured to provide feedback to the physician. For example, the flow occlusion devices described herein can include pressure sensors supported by the catheter on or near the anchor and/or pressure-measuring lumens in the catheter communicating with ports distal and proximal to the device and leading to pressure sensors outside of the patient. As another example, the blood flow control devices described herein can include a flow rate sensor (e.g., within the narrowed location of the device or positioned distally and proximally to the device on the catheter). In some embodiments, the data from the pressure and/or flow sensors can be used by the physician to make adjustments to the blood flow control device to vary the flow rate or pressure differential as desired. In other embodiments, the data from the pressure and/or flow sensors can provide input to a controller, which can then automatically adjust the blood flow control device to vary the flow rate or pressure differential as desired. In some embodiments, other parameters may be used as the basis for adjusting the blood flow control device, such as right atrial pressure, pulmonary pressure, pulmonary capillary wedge pressure, urine output, and the like.

FIGS. **3-10** show aspects of various embodiments of the blood flow control device shown in FIG. **2**. A delivery sheath **140** may be used to deliver catheter **128** and anchor **126** to the desired blood flow control location within a blood vessel, such as the IVC **122** shown in FIG. **5**. Proximal and distal portions **142** and **144** of anchor **126** self-expand to contact the blood vessel wall and to press catheter **128** against the blood vessel wall. When in place in the blood vessel, blood flows along the blood flow path **131** into a proximal opening **138**, through the interior of the anchor and out of a distal opening **139**. As seen best in FIGS. **4-5**, anchor **126** is supported on an exterior side of catheter **128** at a distal section of the catheter such that the catheter is outside of anchor **126** and therefore outside of the blood flow path **131**. Disposition of the catheter outside of the blood flow path may reduce clotting and hemolysis during use of the blood flow control device.

In this embodiment, the blood flow control device can be adjusted to change a dimension of the blood flow path and the amount of occlusion the device provides. The blood flow path through the device is therefore an adjustable blood flow path. A central waist portion **146** of anchor **126** self-expands to a diameter smaller than the diameters of proximal and distal portions **142** and **144**, as shown in FIGS. **3** and **5**. A flexible cinch line **148** (e.g., suture material, such as a braided or monofilament polymer fiber, or a flexible wire or cable) encircles the waist portion **146** to serve as an actuatable flow control element. In one embodiment, a loop of the cinch line **148** wraps around waist portion **146**, and the two free ends of the cinch line **148** pass through the loop and extend proximally from anchor **126** into a lumen **166** of catheter **128**, as shown in FIG. **7**. When the two free ends are pulled proximally (e.g., under the control of an actuator at the proximal end of the catheter), cinch line **148** cinches and changes a dimension of the waist portion **146** to change the shape, and reduce the area, of the anchor and of the adjustable blood flow path at that point, as shown in FIG. **4**. Reduction of blood flow through the blood vessel lowers blood pressure downstream of the blood flow control device. Release of the flow control element **148** allows the waist portion **146** of anchor **126** to return to its unconstrained shape, shown in FIGS. **3** and **5**.

In this embodiment, the two portions of the cinch line **148** are optionally disposed in a tube **145** which extends out of a port **147** on catheter **128**. Tube **145** and the two parts of cinch line **148** extend proximally through a lumen **166** of catheter **128** to an actuator (e.g., the actuator **1300** shown in FIG. **27**) at the proximal end of catheter **128**, outside of the patient. Tube **145** may be omitted in other embodiments. As shown, the flow control element is supported by the catheter out of the adjustable blood flow path.

The blood flow control device of this invention may be used to lower blood pressure within a blood vessel, e.g., in the SVC or in the IVC. Lowering blood pressure in the SVC or in the IVC may also lower pressure in the right side of the patient's heart and may be beneficial in treating heart failure. Pressure sensors may be used to determine the amount of

blood pressure reduction achieved by the device. In the embodiment shown in FIGS. **3-8**, a port **141** on catheter **128** proximal to anchor **126** may communicate blood pressure at that point via a lumen **168** (shown in FIG. **7**) in the catheter to a first pressure sensor (not shown) on the proximal end of catheter **128**. Likewise, a port **143** at the distal end of catheter **128** may communicate via a lumen **170** (shown in FIGS. **7** and **8**) in the catheter to a second pressure sensor (not shown) on the proximal end of catheter **128**. Lumen **170** may also be used as a guidewire lumen for delivery of blood flow control device **200** to the desired site in the blood vessel.

FIGS. **6**A-D show details of a stent **129** that may serve as the scaffold of anchor **126**. Stent **129** may be formed from a shape memory material such as Nitinol. FIG. **6**A shows a flat pattern to be used to cut stent **129** out of a solid tube, FIG. **6**B shows the cut tube prior art being heat set into to the shape shown in FIG. **6**C with the larger diameter proximal and distal portions **142** and **144** and the smaller diameter waist portion **146**.

Proximal and distal catheter attachment elements **150** and **152** may be formed on the proximal and distal ends of stent **129**. In some embodiments, one or both of the catheter attachment elements may be slidingly disposed in a lumen of catheter **128** so that the one or both ends of the stent can move with respect to the catheter as the stent expands or is compressed. Instead of sliding in a lumen of the catheter, one of the attachment elements may be fixed to the catheter by employing the holes **154** for the application of adhesive or for polymer melt bonding in a lumen of the catheter or on an outside surface of the catheter. For example, proximal catheter attachment element **150** may be slidingly disposed in lumen **168** of catheter **128**, as shown in FIG. **7**, and distal catheter attachment element **152** may be fixedly attached to the interior of lumen **166** of catheter **128**, as shown in FIG. **8**. Alternatively, distal catheter attachment element **152** may be slidingly disposed in lumen **166**, as shown in FIGS. **9**A-B and **10**, and the proximal catheter attachment element **150** may be either fixedly or slidingly disposed in lumen **168**. In yet another alternative embodiment, the proximal and/or distal attachment element may be bonded to a tube, and the tube may be slidingly disposed in a lumen of the catheter. A blood impermeable covering **130** may be applied to the outer and/or inner surfaces of stent **129**.

Some embodiments of the invention provide an anchor collapse control element to facilitate collapse of the anchor and placement of the collapsed anchor within the delivery sheath. In the embodiments shown in FIGS. **3-10**, a collapsing line **160** threaded through the proximal end of stent **129** serves as an anchor collapse control element. The two sides of collapsing line **160** extend through a lumen **164** of catheter **128** where its two ends can be drawn proximally to collapse the proximal end of anchor **126** and draw it toward lumen **164**, as shown in FIG. **9**A, at which point the catheter **128** and anchor **126** can be drawn into the delivery sheath **140**, as shown in FIG. **9**B. Collapsing line **160** may be, e.g., a polymer fiber (monofilament or braided polymer line) or a flexible metal wire or cable. Alternatively or additionally, a collapsing line may be attached to the distal end of the anchor to assist with compression of the device when retracting into the delivery sheath.

Collapsing line **160** may be threaded through eyelets **162** formed in stent **129**. Eyelets may be turned 90° during heat set of stent **129**, as shown in FIG. **6**D. Alternatively, the collapsing line may be threaded directly through the proximal stent cells. As yet another alternative, small metal or polymer loops may be attached to the proximal stent cells, and the collapsing line may be threaded through the loops. In embodiments of the invention, the anchor collapse control element is supported by the catheter outside of the adjustable blood flow path.

FIG. **7** is a cross-section of catheter **128** along line A-A in FIG. **5**, and FIG. **8** is a cross-section of catheter **128** along line B-B in FIG. **5**. Catheter **128** has a four lumen proximal section **161** and a two lumen distal section **163**. In some embodiments, distal section **163** may be formed separately from proximal section **161**, and the two sections may be bonded end to end to line up lumens **166** and **170**. Lumens **164** and **168** terminate prior to the proximal end of distal section **163**.

FIGS. **11-13** show other embodiments of the blood flow control device of this invention. Like the embodiments of FIGS. **3-10**, the device has a catheter **128** having four lumens in a proximal section **161** and two lumens in a distal section **163**. The anchors have different shapes, however. In the embodiment shown in FIGS. **11** and **12**, the anchor **172** of has an uncompressed shape of a cylinder, not an hourglass. In the embodiment shown in FIG. **13**, the anchor **172** has an uncompressed shape that has a larger diameter on its proximal and central portions and a smaller diameter at its distal end. As in the earlier embodiments, in both of these embodiments anchor **172** has a stent **174** that may serve as the scaffold of anchor **172**, and stent **174** may be covered on the outside and/or on the inside by a blood impermeable material **176**. Stent **174** may be formed from a shape memory material such as Nitinol. Stent **174** may be attached to catheter **128** via proximal and distal catheter attachment elements **171** and **173**, as described above with respect to the embodiments of FIGS. **3-10**. These embodiments may also employ lumens within catheter **128** to communicate between pressure ports on the catheter proximal and distal to anchor **172** and pressure sensors at the proximal end of catheter **128**. When in place in the blood vessel, anchor **172** expands to engage the inside wall of the blood vessel (e.g., the IVC or the SVC), and blood flows along a blood flow path into a proximal opening **175**, through the interior of the anchor and out of a distal opening **177**.

A flow control element formed by a flexible cinch line **178** (e.g., suture material, such as a braided or monofilament polymer fiber, or a flexible wire or cable) is slidingly attached to the distal end of stent **174** (e.g., through loops formed in, or attached to, the distal ends of the distal cells of stent **174**), and the two free ends of the cinch line **178** extend proximally from anchor **172** into a lumen of catheter **128**, as shown in FIGS. **11** and **13**. When the two free ends are pulled proximally (e.g., under the control of an actuator at the proximal end of the catheter), cinch line **178** cinches and changes a dimension of the distal end of anchor **172** to change the shape, and reduce the area, of the anchor and of the adjustable blood flow path at that point, as shown in FIGS. **12** and **13**. Cinch line **178** may optionally be disposed in a flexible tube **180**, and flexible tube **180** may reside within the catheter lumen. Tube **180** and the two parts of cinch line **178** extend proximally through a lumen of catheter **128** to an actuator (e.g., the actuator **1300** shown in FIG. **27**) at the proximal end of catheter **128**, outside of the patient. Reduction of blood flow through the flow control device lowers blood pressure downstream of the blood flow control device. Release of the flow control element **178** allows anchor **172** to return to its unconstrained shape, shown in FIG. **11**. In embodiments of the invention, the flow control element is supported by the catheter outside of the adjustable blood flow path.

The embodiments of FIGS. **11-13** also employ an anchor collapse control element to facilitate collapse of the anchor **172** and placement of the collapsed anchor within the delivery sheath **140**. As in the embodiments shown in FIGS. **3-10**, a collapsing line **182** threaded through the proximal end of stent **174** (e.g., through loops formed in, or attached to, the proximal ends of the proximal cells of the stent) serves as an anchor collapse control element. The two sides of collapsing line **182** extend through a lumen of catheter **128** where its two ends can be drawn proximally to collapse the proximal end of anchor **172** and draw it into the delivery sheath **140**. Collapsing line **182** may be, e.g., a polymer fiber (monofilament or braided polymer line) or a flexible metal wire or cable. In embodiments of the invention, the anchor collapse control element is supported by the catheter outside of the adjustable blood flow path.

FIG. **14**A shows an embodiment of a blood flow control device similar to that of FIGS. **11-13**. In this embodiment, however, instead of employing catheter ports and lumens to communicate blood pressure to pressure sensors on the proximal end of the catheter, proximal and distal pressure sensors **182** and **184** are disposed on the catheter proximal and distal to the anchor **172**. Conductive wires **186** and **188** extending proximally through the catheter to communicate the outputs of pressure sensors **182** and **184** to a controller (not shown). Pressure sensors **182** and **184** may be MEMS devices or other suitable devices. Such catheter-based pressure sensors may also replace the pressure lumens and proximal pressure sensors of the embodiments of FIGS. **3-10** and other embodiments of the blood flow control device.

FIG. **14**B shows an embodiment similar to that of FIG. **14**A. Anchor **172'**, however, has a shape at its distal end that differs from the shape of anchor **172** in FIG. **14**A. The stent **174'** of anchor **172'** is cut and shape set so as to be cylindrical in its distal portion **179** leading up to distal opening **177**. This cylindrical shape leading to distal opening **177** may provide a narrower jet of blood, and less turbulent flow, at the outflow end of the blood flow control device.

FIG. **15** shows an embodiment of a blood flow control device that, like the embodiments of FIGS. **11-13** and FIG. **14**, has an anchor **172** which is heat set to be cylindrical in its unconstrained state (shown in phantom in FIG. **15**). The device has a catheter **128** having four lumens in a proximal section **161** and two lumens in a distal section **163**. As in those earlier embodiments, anchor **172** has a stent **174** that may serve as the scaffold of anchor **172**, and stent **174** may be covered on the outside and/or on the inside by a blood impermeable material **176**. Stent **174** may be formed from a shape memory material such as Nitinol. Stent **174** may be attached to catheter **128** via proximal and distal catheter attachment elements **171** and **173**, as described above with respect to earlier embodiments. This embodiment may also employ lumens within catheter **128** to communicate between pressure ports on the catheter proximal and distal to anchor **172** and pressure sensors at the proximal end of catheter **128**. When in place in the blood vessel, anchor **172** expands to engage the inside wall of the blood vessel (e.g., the IVC or the SVC), and blood flows along a blood flow path into a proximal opening **175**, through the interior of the anchor and out of a distal opening **177**.

A flow control element formed by a flexible cinch line **178** (e.g., suture material, such as a braided or monofilament polymer fiber, or a flexible wire or cable) is slidingly attached to a central portion of anchor **172**, and the two free ends of the cinch line **178** extend proximally from anchor **172** into a lumen of catheter **128**, as shown in FIG. **15**. When the two free ends are pulled proximally (e.g., under the control of an actuator at the proximal end of the catheter, such as actuator **1300** in FIG. **27**), cinch line **178** cinches and changes a dimension of the central portion of anchor **172** to change the shape, and reduce the area, of the anchor and of the adjustable blood flow path at that point, as shown in FIG. **15**. The two parts of cinch line **178** extend proximally through a lumen of catheter **128** to an actuator (e.g., the actuator **1300** shown in FIG. **27**) at the proximal end of catheter **128**, outside of the patient. Reduction of blood flow through the blood vessel lowers blood pressure downstream of the blood flow control device. Release of the flow control element **178** allows anchor **172** to return to its unconstrained shape, shown in phantom in FIG. **15**. As shown, the flow control element is supported by the catheter outside of the adjustable blood flow path.

The embodiment of FIG. **15** also employs an anchor collapse control element to facilitate collapse of the anchor **172** and placement of the collapsed anchor within the delivery sheath **140**. As in the earlier embodiments, a collapsing line **182** threaded through the proximal end of stent **174** (e.g., through loops formed in, or attached to, the proximal ends of the proximal cells of the stent) serves as an anchor collapse control element. The two sides of collapsing line **182** extend through a lumen of catheter **128** where its two ends can be drawn proximally to collapse the proximal end of anchor **172** and draw it into the delivery sheath **140**. Collapsing line **182** may be, e.g., a polymer fiber (monofilament or braided polymer line) or a flexible metal wire or cable. The anchor collapse control element may be supported by the catheter outside of the adjustable blood flow path.

FIGS. **16-24** illustrate other embodiments of blood flow control devices that provide an adjustable blood flow path. An exemplary blood flow control device **300** is shown in FIG. **16**. The blood flow control device **300** includes a cylindrically shaped anchor **301** with a flow channel **305** extending therethrough. The anchor **301** includes a bladder **303** (or otherwise distensible layer) that can be inflated radially inwards, e.g., with a fluid, to cause narrowing or closing of the flow channel **305**. The narrowing of the flow channel **305** (and thus the amount of occlusion) can be varied by increasing or decreasing the amount of inflation provided to the bladder **303** (the solid line in FIG. **16** indicates a smaller amount of inflation and the dotted line a larger amount). The anchor **301** is mounted laterally on a catheter **309**. Advantageously, the catheter **309** does not extend through the center of the flow channel **305**, thereby reducing the chance of thrombus as blood flows through the channel **305**. The anchor **301** is configured to be collapsed into the sheath **307** for delivery and expanded (as shown) for use. In one embodiment, the anchor **301** can be configured to self-expand by pulling the sheath **307** proximally. The device **300** can further include a plurality of wires **390** attached to the proximal end thereof and configured to enable collapsing of the anchor **301** into the sheath **307** after use.

Another exemplary blood flow control device **400** is shown in FIG. **17**. The device **400** is similar to device **300** except that the wires **390** are replaced with a single pullwire **421** (e.g., a polymer thread or a metal wire/cable) that wraps through the proximal apexes (i.e., the proximal end) of the anchor **401**. To pull the anchor **401** into the sheath **407**, the pullwire **421** can be pulled proximally, which can reduce the radius of the proximal end of the anchor **401** for sheathing. Advantageously, the proximal end of the device **400**

includes minimal wires within the adjustable blood flow path, thereby reducing the chance of thrombus.

Another exemplary blood flow control device **500** is shown in FIG. **18**. The device **500** is similar to device **400** except that the device includes a proximal pressure sensor (not shown) and a distal pressure sensor (not shown) disposed at the proximal end of the catheter to enable feedback regarding the amount of occlusion achieved by the device **500**. In some embodiments, ports **531** and **532** each communicate with a catheter lumen extending to, and communicating with, the pressure sensors. In other embodiments, pressure sensors may be mounted in the distal portion of the catheter, one proximal to the anchor and one distal to the anchor, as in the embodiment of FIG. **14**A. In still other embodiments, the pressure sensors can be replaced with one or more flow sensors positioned within the anchor **501**. In some embodiments, the user (e.g., physician) can adjust the amount of occlusion achieved by the anchor **501** based on the readings from the sensor(s).

Another exemplary blood flow control device **600** is shown in FIG. **19**. The blood flow control device **600** is similar to device **300** except that the anchor **601** includes a central flexible section **661** that is configured to compress radially upon constriction. For example, in one embodiment (shown in FIG. **19**), the device **600** can include an annular balloon **663** positioned around the central flexible section **661**. The annular balloon **663** can be inflated and deflated to vary the constriction placed on the flow channel **605**.

Another exemplary blood flow control device **700** is shown in FIG. **20**. The blood flow control device **700** is similar to device **600** except that the balloon **663** is replaced with a lasso **771** (or other mechanically constricting device). The lasso **771** can be configured, when pulled from the proximal end (e.g., via a pullwire, cable, or thread), to decrease the radius of the central flexible section **761** and thereby increase the occlusion achieved by the anchor **701**.

Another exemplary blood flow control device **800** is shown in FIGS. **21**-**22**. The blood flow control device **800** is similar to device **600** except that the anchor **801** is positioned around the catheter **809** (rather than being attached laterally), and the flexible section **861** is configured to constrict by axially tensioning the anchor **801**. That is, the anchor **801** is configured to compress as the anchor **801** is placed under axial tension to vary the flow therethrough. The distal end of the anchor **801** can be attached to the catheter **809**, and the proximal end of the anchor **801** can be attached to a middle shaft **881** that extends between the sheath **807** and the catheter **809**. As the distance between the distal end of the anchor **801** and the proximal end of the anchor **801** is increased (via relative movement of the catheter **809** and the middle shaft **881**), the flexible section **861** can neck down, decreasing or eliminating flow through the anchor **801** (see the transition from FIG. **21** to FIG. **22**). In an alternative embodiment, the distal end of the anchor **801** can be rotated relative to the proximal end (e.g., via relative rotation of the catheter **809** and the middle shaft **881**) in order to twist the flexible section **861**, resulting in a narrowing of flexible section **861**.

FIG. **23** shows another exemplary blood flow control device **900**. Like device **800**, the device **900** includes an anchor **901** that is positioned around a catheter **909**. The anchor **901** includes an hourglass shape (i.e., includes a central portion **991** with a reduced cross-section) and an interior inflatable element **993** that is configured to inflate or deflate to increase or decrease the flow rate through the channel **905**.

FIG. **24** shows another exemplary blood flow control device **1000**. The blood flow control device **1000** is similar to device **900** except that the inflatable element **993** is replaced with a lasso **1071** positioned within or around a flexible section **1061** of the anchor **1001**, similar to as described with respect to device **700**.

FIG. **25** shows an exemplary handle **1111** for any of the blood flow control devices described herein. The handle **1111** includes an actuation port **1113** that provides a location for pneumatic or mechanical actuation (as described herein). Additionally, the handle **1111** includes ports **1115** and **1117** that provide access for pressure measuring transducers (e.g., to measure the pressure at P**1** and P**2**). Finally, the handle **1111** includes a guidewire port **1119** that can have a rotating hemostatic valve therearound.

FIG. **26** shows another exemplary handle **1211** for any of the blood flow control devices described herein. The handle **1211** can be configured to automatically adjust the amount of occlusion achieved by the occlusion device. For example, the variable occlusion can be controlled by a syringe **1222** within the handle **1211** (e.g., for controlling pneumatic actuation of the occlusion device). The syringe plunger position can be adjusted mechanically by a motor, and the motor can be controlled by a controller that has sensor input from two pressure sensors sensing blood pressure proximal and distal to the anchor.

In some embodiments, the syringe can be replaced with a mechanical actuator (e.g., for controlling mechanic actuation of the occlusion device). For example, the cinch line(s) of the flow control element may be attached to a rotatable knob in the handle. Turning the knob would actuate by spooling or unspooling the cinch line(s) of the flow control element to change the shape of the anchor and the blood flow path. Alternatively, the cinch line(s) could be attached to a lever such that movement of the lever forward or backward would alter the tension on the cinch line(s) to change the shape of the anchor and the blood flow path.

FIG. **27** shows an embodiment of a cinch line actuator for use with embodiments of the blood flow control device describe above. Actuator **1300** has a spool **1302** around which the cinch line(s) are wrapped. A controller **1304** uses pressure information from two pressure sensors (not shown) communicated by lines **1306** and **1308** to operate a motor **1310** to turn spool **1302**. The actuator **1300** may be disposed within a handle **1312** to which the blood flow control device's catheter **128** is connected.

FIG. **28** shows an embodiment of a blood flow control device **1400** providing a constant amount of occlusion of the blood vessel in which it is deployed. Anchor **1402** is heat set to be in a shape that is larger at its proximal end than at its distal end, such as the shape shown in in FIG. **28**. As in those earlier embodiments, anchor **1402** has a stent **1404** that may serve as the scaffold of anchor **1402**, and stent **1404** may be covered on the outside and/or on the inside by a blood impermeable material **1406**. Stent **1404** may be formed from a shape memory material such as Nitinol. Stent **1404** may be attached to a catheter **1408** via proximal and distal catheter attachment elements **1410** and **1412**, as described above with respect to earlier embodiments. This embodiment may also employ lumens within catheter **1408** to communicate between pressure ports (not shown) on the catheter proximal and distal to anchor **1402** and pressure sensors (not shown) at the proximal end of catheter **1408**. When in place in the blood vessel, anchor **1402** expands to engage the inside wall of the blood vessel (e.g., the IVC or the SVC), and blood flows along a blood flow path into a proximal opening **1414**, through the interior of the anchor and out of a distal opening

1416 smaller than the proximal opening. For example, proximal opening **1414** may be 20-30 mm in diameter (i.e., large enough to expand to engage the wall of the IVC or the SVC), and distal opening **1416** may have a diameter of 4-10 mm. The clinician may choose a device that will provide the desired amount of occlusion, and therefore the desire pressure gradient, based on the sizes of the proximal and distal openings

The embodiment of FIG. **28** employs an anchor collapse control element to facilitate collapse of the anchor **1402** and placement of the collapsed anchor within the a delivery sheath. As in the earlier embodiments, a collapsing line **1418** threaded through the proximal end of stent **1404** (e.g., through loops formed in, or attached to, the proximal ends of the proximal cells of the stent) serves as an anchor collapse control element. The two sides of collapsing line **1418** extend through a lumen of catheter **1408** where its two ends can be drawn proximally to collapse the proximal end of anchor **1402** and draw it into the delivery sheath. Collapsing line **1418** may be, e.g., a polymer fiber (monofilament or braided polymer line) or a flexible metal wire or cable.

The blood flow control devices described herein can be used in the SVC or IVC temporarily (e.g., for 8-72 hours) to decrease cardiac filling pressures and preload on the right heart. For example, the flow occlusion devices described herein can be placed in an infrarenal location of the IVC, which may advantageously additionally decrease the renal vein pressure, thereby increasing diuretic effectiveness. The flow occlusion devices described herein can be used to maintain a desired pressure differential thereacross. Advantageously, the flow occlusion devices described herein can achieve variable occlusion, enabling the user (e.g., physician) to adjust the occlusion as desired.

Any or all of the blood flow control devices described above may have anchors that self-expand to 28 mm diameter with sufficient outward expansion force, and the device may be compressed to a size less than 16 Fr. The adjustable blood flow control devices described above may be controlled to restrict the blood flow area from a fully open configuration of 14 mm diameter to a fully closed configuration. The devices may have a length of 4 cm. The catheter may have a built-in loading sheath for introduction into a 16 Fr venous sheath.

When a feature or element is herein referred to as being "on" another feature or element, it can be directly on the other feature or element or intervening features and/or elements may also be present. In contrast, when a feature or element is referred to as being "directly on" another feature or element, there are no intervening features or elements present. It will also be understood that, when a feature or element is referred to as being "connected", "attached" or "coupled" to another feature or element, it can be directly connected, attached or coupled to the other feature or element or intervening features or elements may be present. In contrast, when a feature or element is referred to as being "directly connected", "directly attached" or "directly coupled" to another feature or element, there are no intervening features or elements present. Although described or shown with respect to one embodiment, the features and elements so described or shown can apply to other embodiments. It will also be appreciated by those of skill in the art that references to a structure or feature that is disposed "adjacent" another feature may have portions that overlap or underlie the adjacent feature.

Terminology used herein is for the purpose of describing particular embodiments only and is not intended to be limiting of the invention. For example, as used herein, the singular forms "a", "an" and "the" are intended to include the plural forms as well, unless the context clearly indicates otherwise. It will be further understood that the terms "comprises" and/or "comprising," when used in this specification, specify the presence of stated features, steps, operations, elements, and/or components, but do not preclude the presence or addition of one or more other features, steps, operations, elements, components, and/or groups thereof. As used herein, the term "and/or" includes any and all combinations of one or more of the associated listed items and may be abbreviated as "/".

Spatially relative terms, such as "under", "below", "lower", "over", "upper" and the like, may be used herein for ease of description to describe one element or feature's relationship to another element(s) or feature(s) as illustrated in the figures. It will be understood that the spatially relative terms are intended to encompass different orientations of the device in use or operation in addition to the orientation depicted in the figures. For example, if a device in the figures is inverted, elements described as "under" or "beneath" other elements or features would then be oriented "over" the other elements or features. Thus, the exemplary term "under" can encompass both an orientation of over and under. The device may be otherwise oriented (rotated 90 degrees or at other orientations) and the spatially relative descriptors used herein interpreted accordingly. Similarly, the terms "upwardly", "downwardly", "vertical", "horizontal" and the like are used herein for the purpose of explanation only unless specifically indicated otherwise.

Although the terms "first" and "second" may be used herein to describe various features/elements (including steps), these features/elements should not be limited by these terms, unless the context indicates otherwise. These terms may be used to distinguish one feature/element from another feature/element. Thus, a first feature/element discussed below could be termed a second feature/element, and similarly, a second feature/element discussed below could be termed a first feature/element without departing from the teachings of the present invention.

Throughout this specification and the claims which follow, unless the context requires otherwise, the word "comprise", and variations such as "comprises" and "comprising" means various components can be co-jointly employed in the methods and articles (e.g., compositions and apparatuses including device and methods). For example, the term "comprising" will be understood to imply the inclusion of any stated elements or steps but not the exclusion of any other elements or steps.

As used herein in the specification and claims, including as used in the examples and unless otherwise expressly specified, all numbers may be read as if prefaced by the word "about" or "approximately," even if the term does not expressly appear. The phrase "about" or "approximately" may be used when describing magnitude and/or position to indicate that the value and/or position described is within a reasonable expected range of values and/or positions. For example, a numeric value may have a value that is +/−0.1% of the stated value (or range of values), +/−1% of the stated value (or range of values), +/−2% of the stated value (or range of values), +/−5% of the stated value (or range of values), +/−10% of the stated value (or range of values), etc. Any numerical values given herein should also be understood to include about or approximately that value, unless the context indicates otherwise. For example, if the value "10" is disclosed, then "about 10" is also disclosed. Any numerical range recited herein is intended to include all

sub-ranges subsumed therein. It is also understood that when a value is disclosed that "less than or equal to" the value, "greater than or equal to the value" and possible ranges between values are also disclosed, as appropriately understood by the skilled artisan. For example, if the value "X" is disclosed the "less than or equal to X" as well as "greater than or equal to X" (e.g., where X is a numerical value) is also disclosed. It is also understood that the throughout the application, data is provided in a number of different formats, and that this data, represents endpoints and starting points, and ranges for any combination of the data points. For example, if a particular data point "10" and a particular data point "15" are disclosed, it is understood that greater than, greater than or equal to, less than, less than or equal to, and equal to 10 and 15 are considered disclosed as well as between 10 and 15. It is also understood that each unit between two particular units are also disclosed. For example, if **10** and **15** are disclosed, then 11, 12, 13, and 14 are also disclosed.

Although various illustrative embodiments are described above, any of a number of changes may be made to various embodiments without departing from the scope of the invention as described by the claims. For example, the order in which various described method steps are performed may often be changed in alternative embodiments, and in other alternative embodiments one or more method steps may be skipped altogether. Optional features of various device and system embodiments may be included in some embodiments and not in others. Therefore, the foregoing description is provided primarily for exemplary purposes and should not be interpreted to limit the scope of the invention as it is set forth in the claims.

The examples and illustrations included herein show, by way of illustration and not of limitation, specific embodiments in which the subject matter may be practiced. As mentioned, other embodiments may be utilized and derived there from, such that structural and logical substitutions and changes may be made without departing from the scope of this disclosure. Such embodiments of the inventive subject matter may be referred to herein individually or collectively by the term "invention" merely for convenience and without intending to voluntarily limit the scope of this application to any single invention or inventive concept, if more than one is, in fact, disclosed. Thus, although specific embodiments have been illustrated and described herein, any arrangement calculated to achieve the same purpose may be substituted for the specific embodiments shown. This disclosure is intended to cover any and all adaptations or variations of various embodiments. Combinations of the above embodiments, and other embodiments not specifically described herein, will be apparent to those of skill in the art upon reviewing the above description.

What is claimed is:

1. A blood flow control device comprising:

a catheter adapted to be advanced into a blood vessel to a blood flow control site within the blood vessel;

an expandable anchor supported by the catheter, the expandable anchor being adapted to expand to engage a wall of the blood vessel, the expandable anchor comprising a blood impermeable wall defining an adjustable blood flow path extending through the expandable anchor from a proximal opening to a distal opening, the catheter being disposed outside of the adjustable blood flow path;

a flow control element supported by the catheter, the flow control element being adapted to change a dimension of the adjustable blood flow path to change a rate of blood flow through the blood flow path;

a first pressure sensor adapted to measure a pressure distal to the adjustable blood flow path and a second pressure sensor adapted to measure a pressure proximal to the adjustable blood flow path;

a pressure port disposed on the catheter distal to the adjustable blood flow path and a lumen extending from the pressure port through the catheter to the first pressure sensor; and

a blood flow control actuator disposed at a proximal section of the catheter and adapted to actuate the flow control element.

2. The blood flow control device of claim **1**, wherein the flow control element is adapted to change a shape of the adjustable blood flow path.

3. The blood flow control device of claim **1**, wherein the flow control element is adapted to change a shape of the expandable anchor.

4. The blood flow control device of claim **3**, wherein the flow control element comprises a cinching line extending proximally from the expandable anchor and adapted to reduce a diameter of at least a portion of the expandable anchor.

5. The blood flow control device of claim **4**, wherein the cinching line extends from the actuator through a lumen of the catheter to an exit port on an exterior side of the catheter.

6. The blood flow control device of claim **3**, wherein the flow control element is adapted to change a shape of a central portion of the expandable anchor.

7. The blood flow control device of claim **3**, wherein the flow control element is adapted to change a shape of a distal portion of the expandable anchor.

8. The blood flow control device of claim **3**, wherein the flow control element is adapted to change a shape of a proximal portion of the expandable anchor.

9. The blood flow control device of claim **1**, wherein the flow control element is supported by the catheter outside of the adjustable blood flow path.

10. The blood flow control device of claim **1**, wherein the expandable anchor is disposed on an exterior side of the catheter at a distal section of the catheter such that the catheter is outside of the anchor.

11. The blood flow control device of claim **10**, further comprising a sliding connector between the expandable anchor and the catheter adapted to permit at least one end of the expandable anchor to move longitudinally with respect to the catheter when the expandable anchor expands or collapses.

12. The blood flow control device of claim **11**, wherein the sliding connector is disposed at a proximal end of the expandable anchor.

13. The blood flow control device of claim **11**, wherein the sliding connector is disposed at a distal end of the expandable anchor.

14. The blood flow control device of claim **1**, wherein the expandable anchor comprises a self-expandable scaffold.

15. The blood flow control device of claim **1**, wherein the blood impermeable wall comprises a blood impermeable covering disposed on at least one of an interior surface and an exterior surface of the expandable anchor and surrounding the adjustable blood flow path.

16. The blood flow control device of claim **1**, further comprising an anchor collapse control element supported by the catheter and adapted to reduce a dimension of the expandable anchor to facilitate placement of the expandable anchor in a sheath.

17. The blood flow control device of claim **16**, wherein the anchor collapse control element is supported by the catheter outside of the adjustable blood flow path.

18. The blood flow control device of claim **16**, further comprising an anchor collapse actuator disposed at a proximal section of the catheter and adapted to actuate the anchor collapse control element.

19. The blood flow control device of claim **16**, wherein the anchor collapse control element is adapted to reduce a cross-sectional dimension of a proximal end of the expandable anchor.

20. The blood flow control device of claim **19**, wherein the anchor collapse control element comprises a line slidingly disposed in a plurality of loops on the proximal end of the expandable anchor and extending proximally through a lumen of the catheter.

21. The blood flow control device of claim **20**, wherein the loops are integral with the expandable anchor.

22. The blood flow control device of claim **19**, further comprising a second anchor collapse control element supported by the catheter and adapted to reduce a cross-sectional dimension of a distal end of the expandable anchor.

23. The blood flow control device of claim **22**, wherein the second anchor collapse control element is supported by the catheter outside of the adjustable blood flow path.

24. The blood flow control device of claim **1**, further comprising a pressure port disposed on the catheter proximal to the adjustable blood flow path and a lumen extending from the pressure port through the catheter to the second pressure sensor.

25. The blood flow control device of claim **1**, wherein the first pressure sensor is supported by the catheter distal to the distal opening of the adjustable blood flow path.

26. The blood flow control device of claim **1**, wherein the second pressure sensor is supported by the catheter proximal to the proximal opening of the adjustable blood flow path.

27. The blood flow control device of claim **1**, further comprising a processor configured to operate the blood flow control actuator to actuate the flow control element based on pressures sensed by the first pressure sensor and the second pressure sensor.

28. A blood flow control device comprising:

a catheter adapted to be advanced into a blood vessel to a blood flow control site within the blood vessel;

an expandable anchor supported by the catheter, the expandable anchor being adapted to expand to engage a wall of the blood vessel, the expandable anchor comprising a blood impermeable wall defining an adjustable blood flow path extending through the expandable anchor from a proximal opening to a distal opening, the catheter being disposed outside of the adjustable blood flow path;

a flow control element supported by the catheter, the flow control element being adapted to change a dimension of the adjustable blood flow path to change a rate of blood flow through the blood flow path;

a first pressure sensor adapted to measure a pressure distal to the adjustable blood flow path and a second pressure sensor adapted to measure a pressure proximal to the adjustable blood flow path;

a pressure port disposed on the catheter proximal to the adjustable blood flow path and a lumen extending from the pressure port through the catheter to the second pressure sensor; and

a blood flow control actuator disposed at a proximal section of the catheter and adapted to actuate the flow control element.

29. The blood flow control device of claim **28**, wherein the flow control element is adapted to change a shape of the adjustable blood flow path.

30. The blood flow control device of claim **28**, wherein the flow control element is adapted to change a shape of the expandable anchor.

31. The blood flow control device of claim **30**, wherein the flow control element comprises a cinching line extending proximally from the expandable anchor and adapted to reduce a diameter of at least a portion of the expandable anchor.

32. The blood flow control device of claim **31**, wherein the cinching line extends from the actuator through a lumen of the catheter to an exit port on an exterior side of the catheter.

33. The blood flow control device of claim **30**, wherein the flow control element is adapted to change a shape of a central portion of the expandable anchor.

34. The blood flow control device of claim **30**, wherein the flow control element is adapted to change a shape of a distal portion of the expandable anchor.

35. The blood flow control device of claim **30**, wherein the flow control element is adapted to change a shape of a proximal portion of the expandable anchor.

36. The blood flow control device of claim **28**, wherein the flow control element is supported by the catheter outside of the adjustable blood flow path.

37. The blood flow control device of claim **28**, wherein the expandable anchor is disposed on an exterior side of the catheter at a distal section of the catheter such that the catheter is outside of the anchor.

38. The blood flow control device of claim **37**, further comprising a sliding connector between the expandable anchor and the catheter adapted to permit at least one end of the expandable anchor to move longitudinally with respect to the catheter when the expandable anchor expands or collapses.

39. The blood flow control device of claim **38**, wherein the sliding connector is disposed at a proximal end of the expandable anchor.

40. The blood flow control device of claim **38**, wherein the sliding connector is disposed at a distal end of the expandable anchor.

41. The blood flow control device of claim **28**, wherein the expandable anchor comprises a self-expandable scaffold.

42. The blood flow control device of claim **28**, wherein the blood impermeable wall comprises a blood impermeable covering disposed on at least one of an interior surface and an exterior surface of the expandable anchor and surrounding the adjustable blood flow path.

43. The blood flow control device of claim **28**, further comprising an anchor collapse control element supported by the catheter and adapted to reduce a dimension of the expandable anchor to facilitate placement of the expandable anchor in a sheath.

44. The blood flow control device of claim **43**, wherein the anchor collapse control element is supported by the catheter outside of the adjustable blood flow path.

45. The blood flow control device of claim **43**, further comprising an anchor collapse actuator disposed at a proximal section of the catheter and adapted to actuate the anchor collapse control element.

46. The blood flow control device of claim **43**, wherein the anchor collapse control element is adapted to reduce a cross-sectional dimension of a proximal end of the expandable anchor.

47. The blood flow control device of claim **46**, wherein the anchor collapse control element comprises a line slidingly disposed in a plurality of loops on the proximal end of the expandable anchor and extending proximally through a lumen of the catheter.

48. The blood flow control device of claim **47**, wherein the loops are integral with the expandable anchor.

49. The blood flow control device of claim **46**, further comprising a second anchor collapse control element supported by the catheter and adapted to reduce a cross-sectional dimension of a distal end of the expandable anchor.

50. The blood flow control device of claim **49**, wherein the second anchor collapse control element is supported by the catheter outside of the adjustable blood flow path.

51. The blood flow control device of claim **28**, wherein the first pressure sensor is supported by the catheter distal to the distal opening of the adjustable blood flow path.

52. The blood flow control device of claim **28**, wherein the second pressure sensor is supported by the catheter proximal to the proximal opening of the adjustable blood flow path.

53. The blood flow control device of claim **28**, further comprising a processor configured to operate the blood flow control actuator to actuate the flow control element based on pressures sensed by the first pressure sensor and the second pressure sensor.

* * * * *