Joseph R. Re (SBN 134,479)
joe.re@knobbe.com
Joshua J. Stowell (SBN 246,916)
joshua.stowell@knobbe.com
KNOBBE, MARTENS, OLSON & BEAR, LLP
2040 Main Street. 14th Floor
Irvine, CA. 92614
(949) 760-0404 Telephone
(949) 760-9502 Facsimile

Nicholas A. Belair (SBN 295,380)
nick.belair@knobbe.com
KNOBBE, MARTENS, OLSON & BEAR, LLP
333 Bush St., 21st Fl.
San Francisco CA 94104
415-217-8399 - Telephone

Attorneys for Defendant
Imperative Care, Inc.

IN THE UNITED STATES DISTRICT COURT

FOR THE NORTHERN DISTRICT OF CALIFORNIA

SAN JOSE DIVISION

INARI MEDICAL, INC., Plaintiff, v. IMPERATIVE CARE, INC., Defendants.	Civil Action No. 5:24-cv-03117-EKL **DECLARATION OF TROY THORNTON IN SUPPORT OF OPPOSITION TO PLAINTIFF'S MOTION FOR PRELIMINARY INJUNCTION** Hon. Eumi K. Lee

Imperative Care v. Inari Medical
IPR2025-01025
Imperative Care Ex. 1089

TABLE OF CONTENTS

Page No.

I. INTRODUCTION 1

A. Engagement 1

B. Experience and Qualifications 1

C. Topics of Opinions 3

D. Materials Considered 3

II. APPLICABLE LEGAL STANDARDS 4

A. Claim Construction 4

B. Anticipation 5

C. Obviousness 5

D. Person of Ordinary Skill in the Art 8

III. THE ’921 PATENT 9

A. Summary of the ’921 Patent 9

B. The Challenged Claims 14

C. Prosecution History 15

D. Claim Construction For ’921 Patent 15

E. Schaffer Renders Claims 1 And 10 Of The ‘921 Patent Invalid 17

1. Independent Claim 1 20

a. Preamble 20

b. Elongate Member 21

c. Tensioning Mechanism 22

i. Actuator 23

ii. Filament 25

d. Biasing System 32

2. Dependent Claim 10 32

TABLE OF CONTENTS
(*cont'd*)

Page No.

F. Claims 1 and 10 of the '921 Patent Cannot be Valid and Infringed by Imperative Care's Symphony 34

IV. THE '910 PATENT 37

A. Summary of the '910 Patent 37

B. The Challenged Claims 42

C. Prosecution History 43

D. Claim Construction 44

E. Garrison and Laub Render Claim 1 Of The '910 Patent Invalid 44

1. Independent Claim 1 48

a. Preamble 48

b. A First Clot Assembly 53

c. A First Fluid Control Device 55

d. The First Pressure Source Is Configured to Generate Vacuum Pressure 56

e. The Vacuum Pressure Is Applied 57

f. A Second Clot Aspiration Assembly 58

g. A Second Pressure Source 63

h. A Second Fluid Control Device 64

i. The Second Pressure Source Is Configured to Generate Vacuum Pressure 66

j. The Vacuum Pressure Is Applied 67

V. SECONDARY CONSIDERATIONS 68

VI. CONCLUSION 69

TABLE OF EXHIBITS

Exhibit No.	Description
1	U.S. Patent No. 11,974,910 ("the '910 patent")
2	U.S. Patent No. 11,844,921 ("the '921 patent")
1012	'921 Patent Prosecution History Excerpt
1022	'910 Patent Prosecution History Excerpt
1035	Resume of Troy Thornton
29	U.S. Patent Publication No. 2015/0173782 A1 to Garrison et al. ("Garrison")
31	U.S. Patent Publication US 2003/0116731 A1 to Hartley ("Hartley")
32	U.S. Patent Publication US 2003/0225379 A1 to Schaffer et al. ("Schaffer")
33	U.S. Patent No. 9,980,813 B1 to Eller ("Eller")
1021	U.S. Patent Publication No. 2017/0043066 A1 to Laub ("Laub")
1023	U.S. Patent No. 8,734,374 B2 to Aklog et al. ("Aklog")
1024	U.S. Patent Application Publication No. 2019/0239910 A1 to Brady et al. ("Brady")
1036	U.S. Patent Publication No. 2010/0042118 A1 to Garrison et al.
1037	U.S. Patent Publication No. 2014/0296868 A1 to Garrison et al.
1038	U.S. Patent No. 5,938,645 to Gordon ("Gordon")
1039	U.S. Patent No. 7,998,104 B2 to Chang ("Chang")

TABLE OF CONTENTS
(*cont'd*)

Page No.

Exhibit No.	Description
1040	U.S. Patent No. 8,157,760 B2 to Criado et al. ("Craido")
1041	U.S. Patent No. 6,481,439 to Lewis et al.

I, Troy L. Thornton, do hereby declare:

I. INTRODUCTION

A. Engagement

1. I have been retained on behalf of Imperative Care, Inc. ("Imperative" or "Defendant") to provide my opinion regarding the patentability of Claim 1 of U.S. Patent No. 11,974,910 ("the '910 patent") and Claims 1 and 10 of U.S. Patent No. 11,844,921 ("the '921 patent"). For the reasons discussed herein, I conclude that Claim 1 of the '910 patent is invalid because the prior art references discussed below anticipate the claims or render them obvious. I have also concluded that Claims 1 and 10 of the '921 patent are invalid because the prior art references anticipate the claims or render them obvious.

2. I understand that this declaration will be submitted in response to Inari's Motion for Preliminary Injunction relating to Imperative Care's Symphony Thrombectomy System (referred to in this declaration as "Symphony"). I have personal knowledge of the matters set forth herein, and if called upon to testify, I could testify competently thereto.

3. I am being compensated at my customary hourly rate of $500 per hour for my work in this matter and I am being reimbursed at cost for my expenses. My compensation in no way depends upon the substance of my opinions or the outcome of this case. I have no financial interest in any of the parties in this case.

B. Experience and Qualifications

4. My experience and qualifications are presented in my resume, which is attached as **Exhibit 1035** to this declaration. To summarize, I received a Bachelor of Science degree in Engineering Science, with Biomedical Engineering emphasis, in 1985 from Iowa State University. Since then, I have worked as an engineer, executive, and consultant in the medical device industry, particularly in the cardiovascular field. My work has included designing and developing numerous medical devices in the cardiovascular field, including catheters, percutaneous heart valve repair systems, stent grafts, and blood pumps.

5. Since 2015 I have worked as a consultant for various medical device companies, assisting the companies with early design, development, problem-solving, and intellectual property related matters.

6. Before my current consulting business, I was a Program Director for Abbott Ventures from June 2012 through December 2014. My work at Abbott Ventures focused on technical assessment and analysis of potential investments in both cardiovascular and non-cardiovascular medical device technologies.

7. In June 2000, I assumed the position of Director of Research and Development at Evalve, Inc., and in 2001 was promoted to Vice President of Research & Development. I served in that position until June 2012. While at Evalve, I was responsible for managing all aspects of research and development for a percutaneous mitral valve repair system known as the MitraClip. The MitraClip system included three complex catheters and a permanent mechanical implant, and I led the research and development for all aspects of the product. The MitraClip product received FDA approval in 2013 and is currently available in over 30 countries.

8. From June 1995 through May 2000, I was a Project Manager at Prograft Medical Inc. While at Prograft, I was responsible for the development and commercial launch of a bifurcated, modular stent-graft used in the treatment of abdominal aortic aneurysms known as Excluder. I managed the overall project from its inception through initial commercialization, which involved designing and building initial protypes, developing physician training materials, assisting with regulatory filings, providing physician training, and supporting physicians during five live case transmissions during endovascular symposia.

9. From August 1989 through May 1995, I worked as a Project Group Leader and Senior Engineer for Advanced Cardiovascular Systems at Guidant. My work at Guidant focused on the design and development of percutaneous transluminal coronary angioplasty (PTCA) and perfusion catheters. I was responsible for catheter design, material selection, process development, performance testing, physician evaluation, and animal studies for an

elliptical coronary PTCA catheter that ultimately became the top-selling PTCA catheter in the United States.

10. From 1987 to 1989, I worked as a Manufacturing Engineer at Symbion, Inc. My work at Symbion included developing and improving manufacturing processes for class III medical devices, including a centrifugal blood pump.

11. From 1985 to 1987 I worked as a Process Engineer at Becton-Dickenson, Inc. My work at Becton-Dickenson included validating and implementing manufacturing processes for a thermodilution catheter and conducting cost saving and process improvements for central venous catheter products.

12. In summary, I have more than 35 years of experience in the cardiovascular medical device field, including significant experience designing, developing, testing, and manufacturing catheters and catheter systems for minimally invasive cardiovascular procedures. I am therefore very familiar with the concepts of catheters, catheter systems, and hemostasis valves, and I believe I am well placed to comment on the understanding of a person of ordinary skill in the art in the context of the '910 patent.

C. <u>Topics of Opinions</u>

13. I offer opinions in this Declaration on the following general topics:

- The subject matter described and claimed in the '910 and '921 patents;
- The level of ordinary skill in the art pertaining to the '910 and '921 patents;
- The teachings of the prior art; and
- Whether Claims 1 and 10 of the '921 patent and Claim 1 of the '910 patent would have been obvious to a person of ordinary skill in the art at the time of the alleged invention, in view of the prior art.

D. <u>Materials Considered</u>

14. In preparing this Declaration, I have considered the materials referenced in this Declaration and identified in the attached list of exhibits.

15. I have also relied on my education, training, and experience, and my knowledge of pertinent literature in the field of the '921 and '910 patents.

II. APPLICABLE LEGAL STANDARDS

16. I am a biomedical engineer by training and profession. The opinions I am expressing in this Declaration involve the application of my education, training, and technical knowledge and experience to the evaluation of certain prior art with respect to the '921 and '910 patents.

17. Although I have had some prior exposure to patent matters, I am not an expert in patent law. Therefore, I have been advised of certain principles of patent law applicable in this matter, which I have used in arriving at my determinations and opinions. The paragraphs below express my understanding of how I must apply these principles in forming my opinions.

A. Claim Construction

18. I understand that the first step in assessing the patentability of a patent claim is to understand the meaning of the words used in the claims. I understand this process of defining, or construing, the claim terms is generally referred to as claim construction. Generally speaking, I understand that I am to apply the ordinary and customary (i.e., plain and ordinary) meaning of each claim term as would have been understood by a person of ordinary skill in the art at the time of the invention, consistent with the specification and prosecution history.

19. I also understand that the patentee may act as its own lexicographer such that they may redefine a claim term to have a meaning that is different from the plain and ordinary meaning. I understand that when a patentee has acted as its own lexicographer, the patentee's definition should be applied instead of the plain and ordinary meaning that the term would have absent the redefinition. I understand that the patentee can redefine a claim term in either the specification or in statements made to the Patent Office during prosecution of the patent. I understand that the patentee's redefinition of a term does not need to be provided in express definitional format, but rather that the redefinition can be implied through the disclosure of the specification or the patentee's statements during prosecution.

B. Anticipation

20. I understand that a patent claim is unpatentable if it is "anticipated" by a piece of prior art. I have been instructed that a claim is "anticipated" if a prior art reference describes, either expressly or inherently, each limitation of the claim. I understand that this description must be recognizable to a person of ordinary skill in the art at the time of the alleged invention. In the case of the '921 patent, I understand the time of the alleged invention is September 2017. In the case of the '910 patent, I understand the time of the alleged invention is August 2018. However, my opinions would not change if the time of the alleged invention was later.

21. I understand that an element is "inherent in," and therefore taught by, the prior art, if it necessarily flows from the explicit disclosure of the prior art. The fact that a certain result or characteristic may be present in the prior art is not sufficient to establish inherency. However, if the result or characteristic is necessarily present based upon the explicit disclosure in the prior art, it is inherent in the prior art and is therefore disclosed.

C. Obviousness

22. I understand that a patent claim may also be unpatentable if it is rendered "obvious" by the prior art. I have been instructed that a claim is "obvious" if the claimed subject matter as a whole would have been obvious to a person of ordinary skill in the art at the time of the alleged invention. I understand that in considering obviousness I must consider the scope and content of the prior art, the differences between the claimed subject matter and the prior art, and the level of ordinary skill in the art at the time of the invention.

23. In determining the scope and content of the prior art, I understand that a reference is considered analogous (i.e., appropriate) prior art if it falls within the field of the inventor's endeavor. In addition, a reference is analogous prior art if it is reasonably pertinent to the particular problem with which the inventor was involved. A reference is reasonably pertinent if it logically would have commended itself to an inventor's attention in considering the problem. If a reference relates to the same problem as the claimed invention, that supports use of the reference as prior art in an obviousness analysis.

24. The prior art references applied in this Declaration with respect to the '921 patent are analogous art that is usable in an obviousness combination. The references are from the same field as the '921 patent, e.g., hemostasis valves for use during intravascular procedures. The references are also pertinent to the problem the inventor was focused on, e.g., sealing a catheter during intravascular procedures to minimize blood leaks.

25. The prior art references applied in this Declaration with respect to the '910 patent are analogous art that is usable in an obviousness combination. The references are from the same field as the '910 patent, e.g., devices for aspirating unwanted material from a patient. The references are also pertinent to the problem the inventor was focused on, e.g., removing clots, emboli, and thrombi from a patient's blood vessel.

26. To assess the differences between prior art and the claimed subject matter, I have been instructed that the law requires the claimed invention to be considered as a whole. This "as a whole" assessment requires showing that one of ordinary skill in the art at the time of invention, confronted by the same problems as the inventor and with no knowledge of the claimed invention, would have selected the elements from the prior art and combined them in the claimed manner.

27. I am also informed that the law recognizes several rationales for combining references or modifying a reference to show obviousness of claimed subject matter. Some of these rationales include:

- combining prior art elements according to known methods to yield predictable results;
- simple substitution of one known element for another to obtain predictable results;
- a predictable use of prior art elements according to their established functions;
- applying a known technique to a known device (method or product) ready for improvement to yield predictable results;

- choosing from a finite number of identified, predictable solutions, with a reasonable expectation of success; and
- some teaching, suggestion, or motivation in the prior art that would have led one of ordinary skill to modify the prior art reference or to combine prior art reference teachings to arrive at the claimed invention.

28. A prior art reference may also suggest a limitation of the claims. In that case, even if the prior art reference does not explicitly or inherently disclose the limitation, the motivation to modify the prior art reference to include the limitation may exist within the prior art reference itself. Thus, the limitation would have been obvious over that prior art reference alone. This is the case if a person of ordinary skill in the art would have had a simple design choice or a finite number of identified, predictable solutions, for example, and if the modification furthers the goals of the prior art reference.

29. I have also been informed that the obviousness analysis must be performed from the perspective of a person of ordinary skill in the art at the time of the alleged invention. This is to avoid using impermissible hindsight in the analysis. The claims of the patent must not be used to provide a road map for obviousness; instead, the claims would have been obvious if a person of ordinary skill in the art would have been motivated to combine the teachings of the prior art to arrive at the claimed invention and had a reasonable expectation of success in doing so.

30. An obviousness analysis also must consider whether there are additional factors that would indicate that the invention would not have been obvious. These factors include whether there was: (i) a long-felt need in the industry; (ii) any unexpected results; (iii) skepticism of the invention; (iv) a teaching away from the invention; (v) commercial success; (vi) praise by others for the invention; and (vii) copying by others. I am not aware of any evidence under these factors that would suggest that Claims 1 and 10 of the ’921 patent or Claim 1 of the ’910 patent would have been non-obvious, as further explained in Section §V. (Heading: “Secondary Considerations”) below.

D. Person of Ordinary Skill in the Art

31. It is my understanding that when interpreting the claims of the '921 and '910 patents, I must do so based on the perspective of a person of ordinary skill in the art at the relevant priority date. I have been instructed to assume for the purposes of my opinions that the relevant priority date for the '921 patent is September 6, 2017 and the relevant priority date for the '910 patent is August 13, 2018. I have been informed that all of the references relied upon in this Declaration qualify as prior art under those priority dates.

32. I am informed that the person of ordinary skill in the art is a hypothetical person who is presumed to have known the relevant art at the time of the invention. This is a person of ordinary creativity, not an automaton.

33. I am informed that in determining the level of ordinary skill in the art, several factors are considered. Those factors may include: (i) the type of problems encountered in the art; (ii) prior art solutions to those problems; (iii) the rapidity with which innovations are made; (iv) the sophistication of the technology; and (v) the educational level of active workers in the field. A person of ordinary skill in the art must have the capability of understanding the scientific and engineering principles applicable to the pertinent art.

34. Based on my review of the specification and claims of the '921 patent, it is my opinion that a person of ordinary skill in the art would have had an undergraduate degree in mechanical engineering or a related engineering discipline and 2-4 years of product design or engineering experience.

35. Based on my review of the specification and claims of the '910 patent, it is my opinion that a person of ordinary skill in the art would have had an undergraduate degree in mechanical engineering or a related engineering discipline and 2-4 years of catheter design experience.

36. I can make these assessments because during my career, I had experience assigning engineers to work on mechanical design projects, including projects to design catheters, sheaths, and related components such as hemostasis valves for use in cardiovascular procedures. For such projects, I would assign an engineer with the experience described above.

III. THE '921 PATENT

A. Summary of the '921 Patent

37. The '921 patent is titled "Hemostasis Valves and Methods of Use" and describes embodiments of a hemostasis valve (also referred to in the '921 patent as a "garrote" valve) for use with a catheter during minimally invasive intravascular procedures. (Ex. 2, 5:49-67). The valve creates a seal that prevents blood from passing through the valve, including when a tool is passed through the valve. (*Id.* at 5:58-61). The valve prevents blood from leaking through the catheter during the intravascular procedure, and also prevents air or other contaminants from entering the patient's vasculature. (*Id.* at 1:35-38).

38. As illustrated in Figure 2 of the '921 patent below, the stasis valve described in the '921 patent includes a "housing 128" that defines a "interior channel 130," and a collapsible "elongate member 132" that extends through the housing:

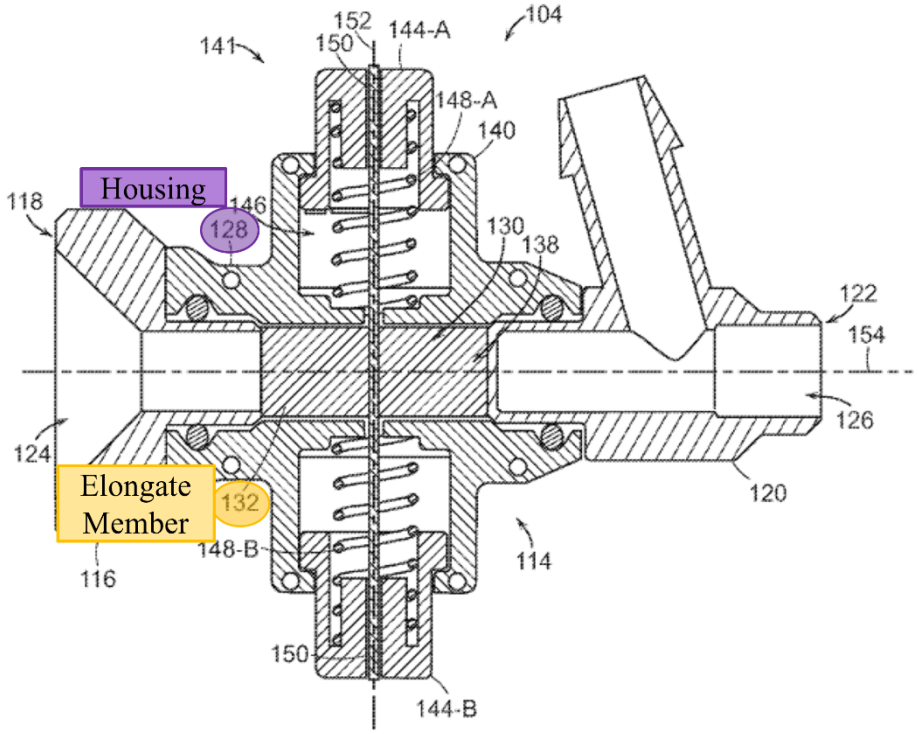

FIG. 2

(*Id.* at 6:49-7:24, Fig. 2). The '921 patent explains that the elongate member 132 has a "thin-walled compliant tubular structure," which helps facilitate "the uniform collapse of the elongate member 132 and the sealing of the elongate member 132." (*Id.* at 7:10-16).

39. The '921 patent describes that the sealing of the elongate member is accomplished by a "constricting mechanism," which can "collapse and seal the elongate member 132 via compression and/or constriction, and specifically via constriction with at least one filament 150." (*Id.* at 8:1-4). The '921 patent explains that the filament "can extend at least partially around the elongate member." (*Id.* at 8:6-8). The constricting mechanism also includes an actuator, which the '921 patent states "can be a manual actuator such as one or several buttons 144":

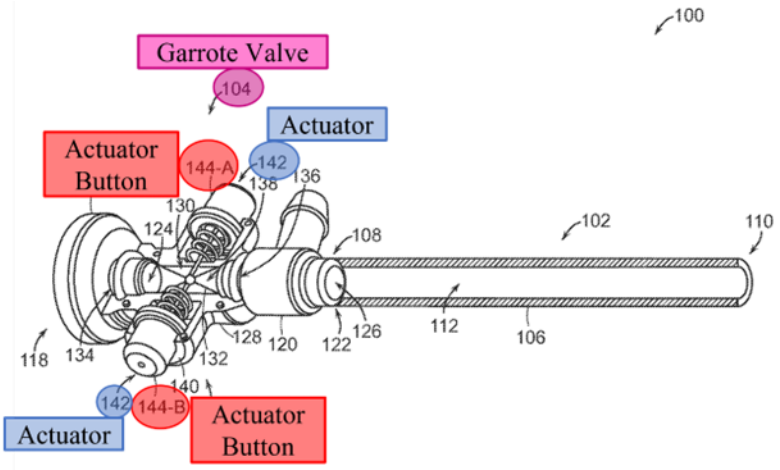

FIG. 1

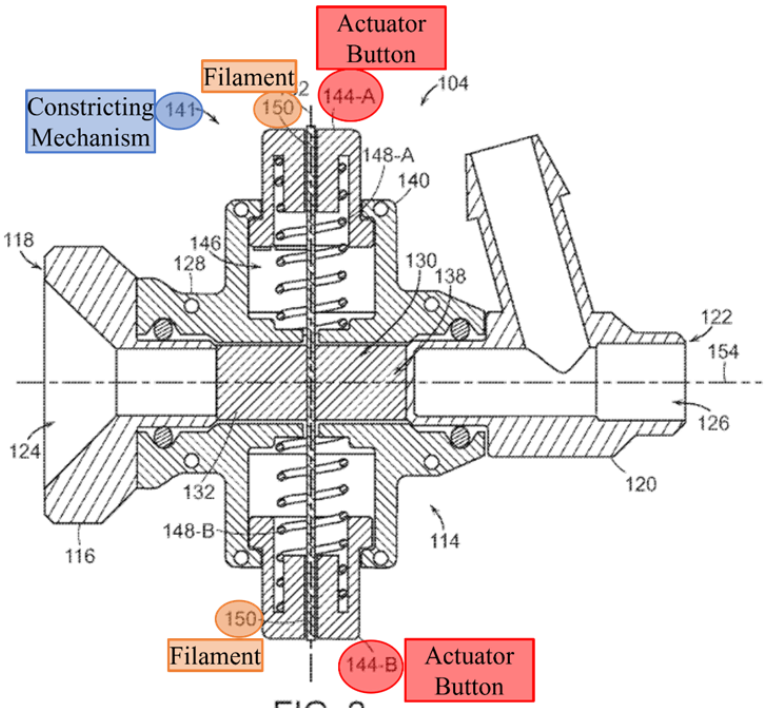

FIG. 2

(*Id.* at 8:1-3, Figs. 1-2). The filament is "coupled to the actuator 142 such that the filament 150

selectively constricts, collapses, and/or seals the elongate member 132 … based on the movement and/or position of the actuator 142." (*Id.* at 9:18-22).

40. The '921 patent also explains that the valve can include a "bias feature," such a spring (148-A and 148-B), which biases the valve to either the closed (referred to as first) or open (referred to as second) position when no outside forces are being applied to the actuator. (*Id.* at 8:32-51). Figure 2 shows the valve biased toward the first, closed position:

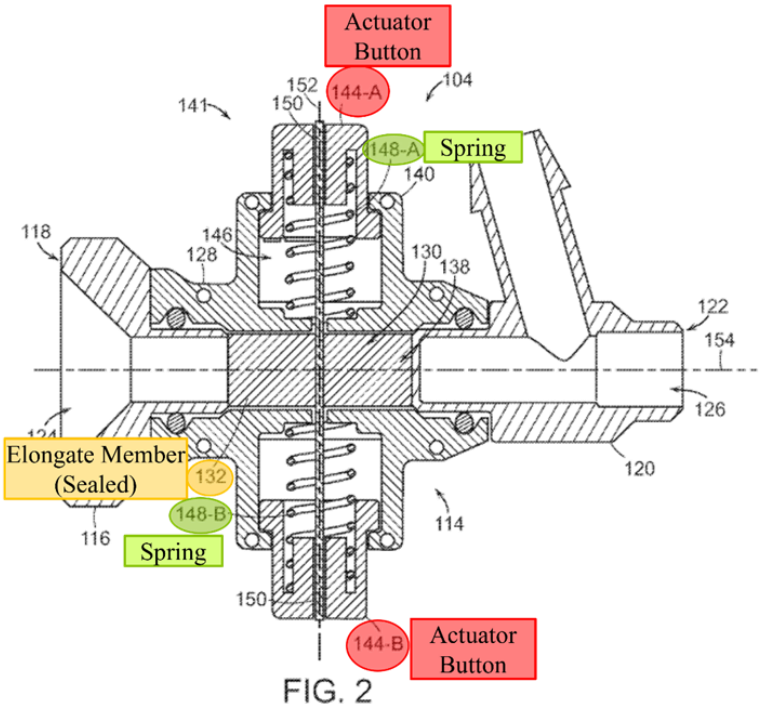

FIG. 2

(*Id.* at 8:32-51, Fig. 2). The '921 patent explains that when the actuator buttons are depressed by an outside force, the tension on the filament is loosened "thereby allowing the expansion of the elongate member 132 and the unsealing of the central lumen 138 of the elongate member 132." (*Id.* at 9:48-56). Figure 3 below depicts the valve in the second, opened position when the actuator buttons are depressed:

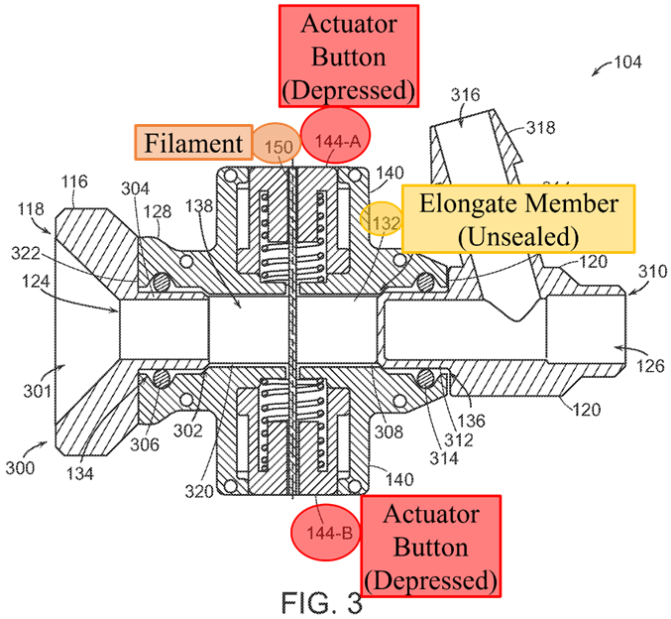

FIG. 3

(*Id.* at 5:25-26, Fig. 3).

41. The '921 patent explains that its constricting mechanism, including the filament, can constrict the elongate member around a tool that is inserted through the central lumen of the elongate member to "create a seal between the elongate member 132 and the tool." (*Id.* at 11:64-12:24). Figure 4 below depicts the valve in the first, closed position, with a tool 400 inserted through the central lumen of the elongate member:

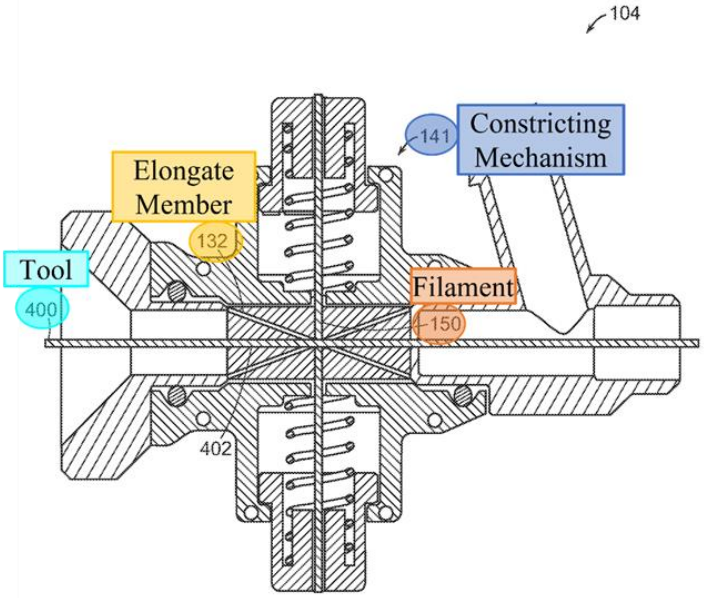

FIG. 4

(*Id.* at 5:27-29, Fig. 4).

42. The '921 patent discloses that the "filament 150 can be arranged in a variety of configurations" including a single loop 604 that can extend around the elongate member 132 as shown in Figure 6, multiple loops that can extend around the elongate member as shown in Figure 7, or a "U-shaped section between the two ends of the filament 150" (i.e., a bight) that can extend around the elongate member as shown in Figures 8 and 9:

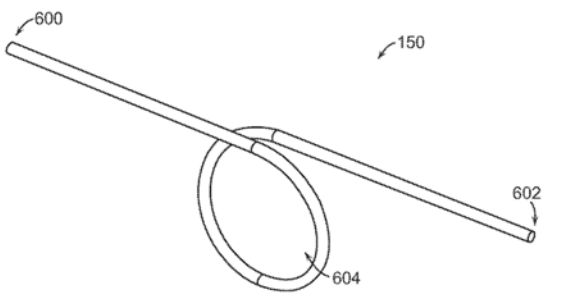

FIG. 6

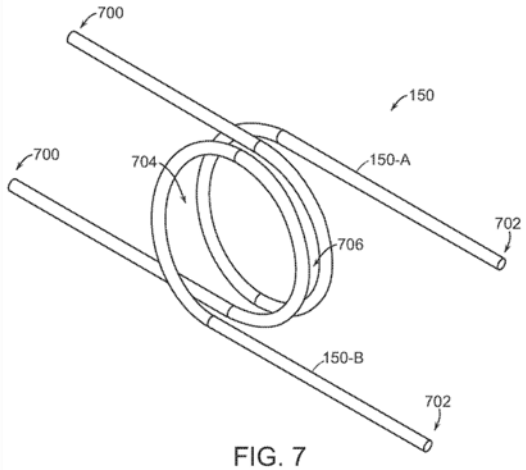

FIG. 7

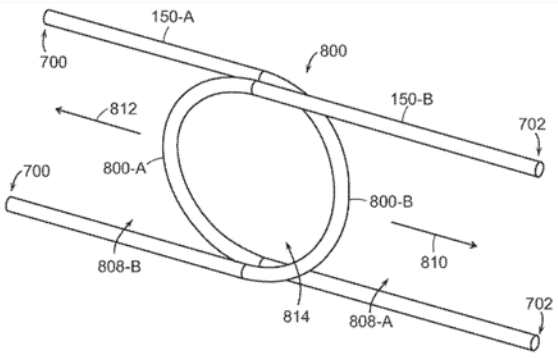

FIG. 8

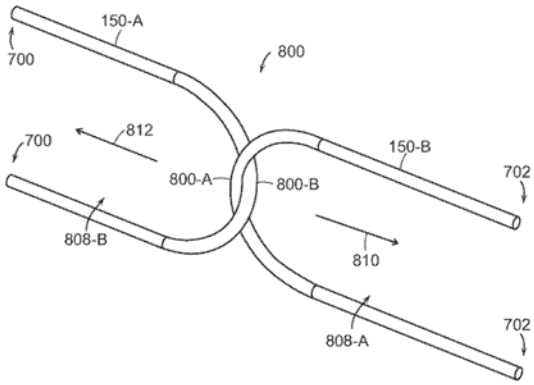

FIG. 9

(*Id.* at 13:10-14:27, Figs. 6-9). The '921 patent also discloses that the filament can be formed from a range of materials "including, for example, a polymer, a synthetic, and/or a metal." (*Id.* at 9:7-10). The filament can also "comprise a single strand such as, for example, a monofilament" or it "can comprise a plurality of strands that can be, for example, twisted, woven, grouped, and/or fused to form the filament." (*Id.* at 9:10-15). Accordingly, "the filament 150 can comprise one or several threads, lines, cords, rope, ribbon, flat wire, sheet, or tape." (*Id.* at 9:15-17). Additionally, "in some embodiments, each of the first end 700 and the second end 702 of one or more of the multiple filaments 150 can be coupled to different buttons

144":

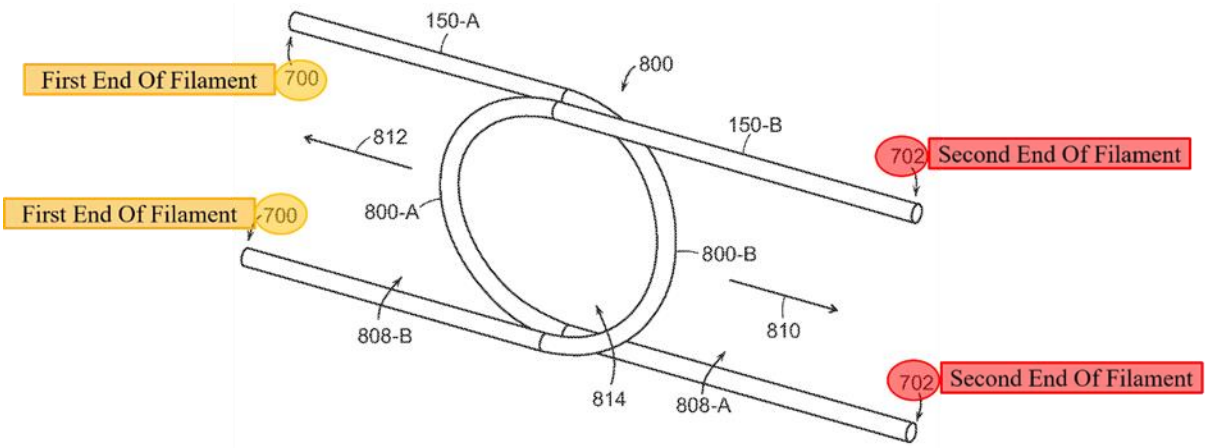

FIG. 8

(*Id.* at 13:1-9, Fig. 8).

B. <u>The Challenged Claims</u>

43. The challenged claims include Claims 1 and 10 of the '921 patent. The asserted claims include 1 independent claim (Claim 1).

44. Claim 1 is illustrative (but not representative) of some of the limitations in the challenged claims. Claim 1 states:

> 1. A valve, comprising:
> an elongate member defining a lumen;
> an active tensioning mechanism including an actuator coupled to the elongate member via a filament extending at least partially around the elongate member, wherein the actuator is moveable between (a) a first position wherein the lumen is constricted and sealed and (b) a second position wherein the lumen is at least partially open; and
> a biasing member configured to bias the actuator to the first position.

(Ex. 2 at Claim 1).

45. Claim 10 depends from independent claim 1 and states:

> 10. The valve of claim 1 wherein the actuator is a first actuator, wherein the filament is a first filament, wherein the biasing member is a first biasing member, and wherein the active tensioning mechanism further comprises:
> a second actuator coupled to the elongate member via a second filament extending at least partially around the elongate member, wherein the second actuator is moveable between (a) a first position wherein the lumen is constricted and sealed and (b) a second position wherein the lumen is at least partially open; and
> a second biasing member configured to bias the second actuator to the first position.

(*Id.* at Claim 10).

C. Prosecution History

46. I have reviewed the '921 patent's prosecution history. I see that the Patent Examiner did not issue any office actions and did not include any prior-art based rejections.

47. I also see that in a notice of allowance issued on October 18, 2023, the Examiner stated the following regarding the Hartley prior art reference that I discuss herein:

> **Hartley** discloses a valve 8 comprising:
> an elongate member 22 defining a lumen 3; an active tensioning mechanism including an actuator 12 coupled to the elongate member via a filament 20 extending at least partially around the elongate member, wherein the actuator is movable between a first position (Figs. 2 & 4), wherein the lumen constricted and sealed; a section position (Figs. 1 & 3) wherein the lumen is at least partially open. Harley [sic] fails to disclose a biasing member configured to bias the actuator to the first position. **Note**: the spring 29 in Hartley is not configured to bias the actuator to the first position. A ball 28 loaded by the spring 29 to detent or hold in the housing 6.

(Ex. 1012 at 3). In other words, the Examiner found that Hartley disclosed every limitation in Claim 1 of the '921 patent except for a "biasing member configured to bias the actuator to the first position."

D. Claim Construction For '921 Patent

48. I have reviewed the claims, specification, and prosecution history of the '921 patent, and in my opinion, a person of ordinary skill in the art in September 2017 would have understood that the term "filament" in the claims of the '921 patent to mean at least: "one or more threads, lines, cords, ropes, ribbons, flat wires, sheets, or tapes." I have not identified any other terms that require further construction by the Court to address the invalidity of Claims 1 and 10. However, I understand from counsel that some of the claim terms may be limited to the structures expressly described in the '910 patent specification (or something equivalent to that structure). Whether the Court ultimately adopts such a construction of the terms does not impact my opinions because Schaffer discloses the structures described in the '910 patent specification. As I explain below, Schaffer is closer to the valves described in the '910 patent specification than the valve in the accused Symphony.

49. I understand from counsel that the claim construction analysis should begin with the language of the claims themselves. Here, the claims do not provide much information about the meaning of "filament." Claim 1 of the '921 patent says that the active tensioning member includes an "actuator coupled to the elongate member via a filament extending at least partially around the elongate member." (Ex. 2 at Claim 1). While this language identifies some characteristics the filament must have (e.g., the ability to extend at least partially around the elongate member), the claim language does not identify the structures or materials that form a "filament."

50. Claim 10 of the '921 patent says that "the filament is a first filament," and that there is also a "second filament extending at least partially around the elongate member." (Ex. 2 at Claim 10). This language also does not identify the structures or materials that form a "filament."

51. The specification of the '921 patent does identify structures and materials that may form the "filament." The specification discloses that the filament can be formed from a range of materials "including, for example, a polymer, a synthetic, and/or a metal." (*Id.* at 9:7-10). The specification further provides that "the filament can comprise a single strand such as, for example, a monofilament, [or] the filament can comprise a plurality of strands that can be, for example, twisted, woven, grouped, and/or fused to form the filament." (*Id.* at 9:10-15). The '921 patent also states that "the filament 150 can comprise one or several threads, lines, cords, rope, ribbon, flat wire, sheet, or tape." (*Id.* 9:15-17).

52. The specification of '921 patent also explains that "the filament 150 can comprise multiple filaments and specifically, as shown in FIGS. 7 through 9, the filament 150 can comprise a first filament 150-A and a second filament 150-B." (*Id.* at 12:54-57). Figure 7 below illustrates an embodiment where the filament is comprised of multiple loops, and Figures 8 and 9 below illustrate embodiments where the filament is comprised of a "U-shaped section between the two ends of the filament 150" (i.e., a bight):

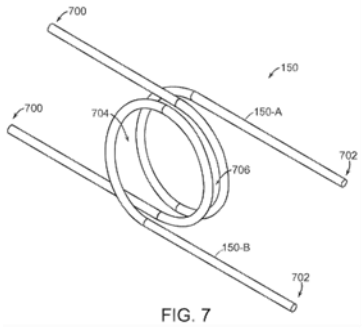

FIG. 7

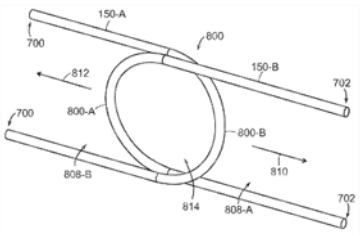

FIG. 8

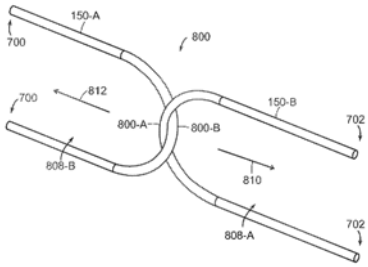

FIG. 9

(*Id.* at 13:10-14:27, Figs. 7-9).

53. In view of the claim language and specification discussed above, I believe that a person of ordinary skill in the art in September 2017 would have understood the term "filament" recited in the '921 patent to mean at least: "one or more threads, lines, cords, ropes, ribbons, flat wires, sheets, or tapes."

E. <u>Schaffer Renders Claims 1 And 10 Of The '921 Patent Invalid</u>

54. Schaffer describes a hemostasis valve "that blocks the flow of gas or fluid completely and immediately with or without an instrument in place within the gas/fluid path." (Ex. 32 at [0002], [0008]). As shown in Figure 32 below, Schaffer describes an example of a hemostasis valve that has a tubular seal module 100 extending through the center of the valve and an actuator comprising: (a) two actuator buttons 261 positioned on opposite sides of the seal module, (b) two compression springs 210/267 coupled to the actuator buttons, and (3) two U-shaped actuating members 55 that compress the seal module when the actuating buttons are undepressed to close the valve:

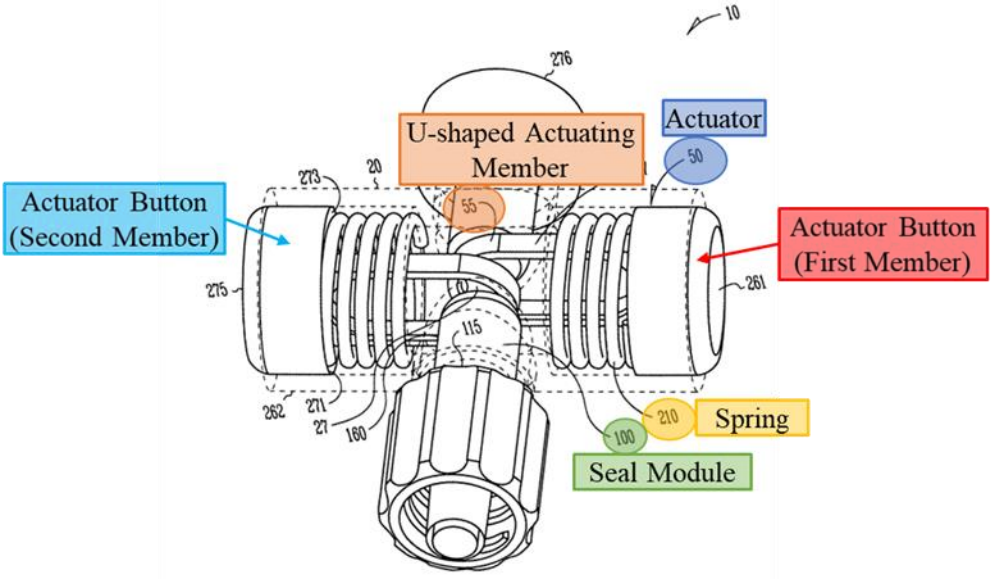

Fig. 31

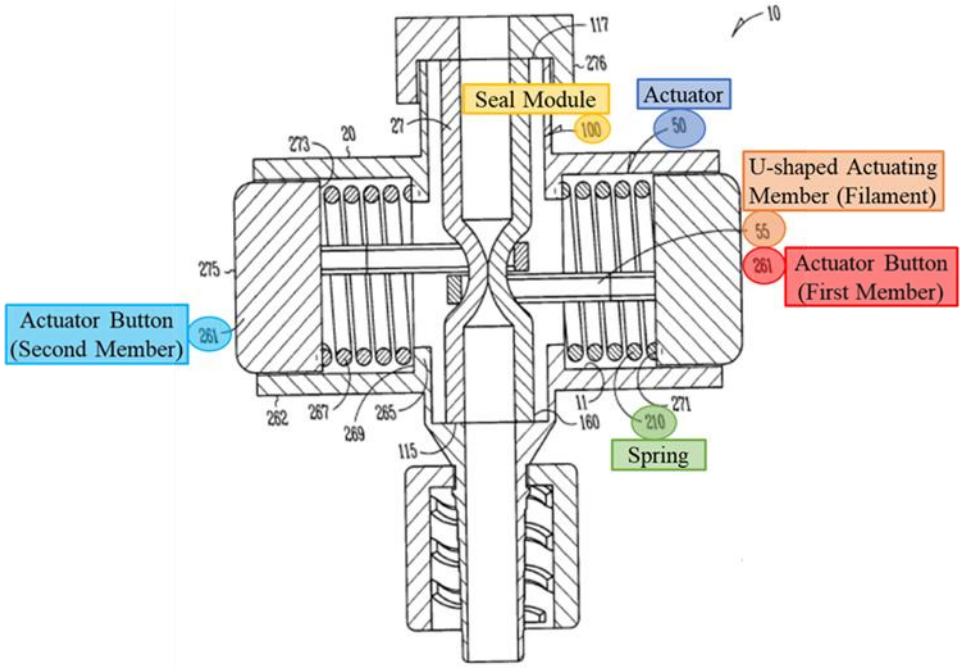

Fig. 32

(*Id*. at [0076]-[0077], Figs. 31-32).[1] Thus, the example of Schaffer's hemostasis valve depicted in Figures 31-34 has the same components in the same arrangement as the valve described and

[1] I note that Figures 30-34 of Schaffer, as published, are darkened and unclear. However, I understand that Schaffer submitted a set of clearer black and white drawings during prosecution that were inadvertently omitted from the published application, but that are otherwise available as part of Schaffer's published file history. For clarity, I use Schaffer's clearer images in this Declaration, which I have attached as **Exhibit 1025**.

claimed in the ’921 patent, which is apparent from the side-by-side comparison of Figure 2 of the ’921 patent (left) and Figure 32 of Schaffer (right):

’921 Patent | Schaffer

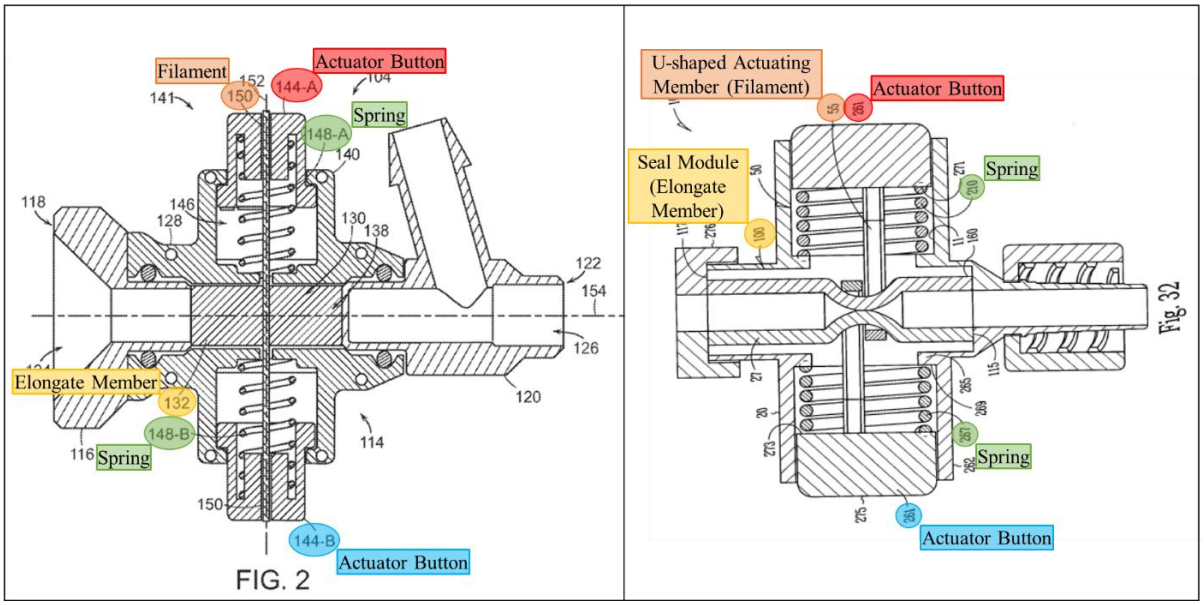

(Ex. 2 (’921 patent) at Fig. 2 (left); Ex. 32 (Schaffer) at Fig. 32 (right)). Because Schaffer discloses all of the components claimed in the ’921 patent, it is my opinion that Schaffer anticipates Claims 1 and 10 of the ’921 patent. It is also my opinion that if the Court finds that Schaffer does not anticipate Claims 1 or 10, Claims 1 and 10 would have been obvious to a person of ordinary skill in September 2017 in view of Schaffer’s disclosures.

55. As noted in the preceding paragraph, Schaffer’s valve includes two U-shaped actuating members that constrict the valve’s central lumen to form a seal. (Ex. 32 at [0076]-[0077]). As I explain in detail below, Schaffer’s U-shaped actuating members are a “filament,” as that term is defined and claimed in the ’921 patent, because the U-shaped actuating members are at least “flat wires.” (*Infra* ¶¶67-69). However, even if Schaffer’s U-shaped actuating members are not a “filament,” using a filament to constrict the central lumen of a hemostasis valve was not a novel or nonobvious concept in September 2017. For example, Hartley discloses hemostasis valves that use a filament to constrict the lumen of a tubular member to seal the valve. Hartley’s “filament” is described as a string, suture, or band secured to a rotary actuator, which is shown in Hartley’s Figure 3 below:

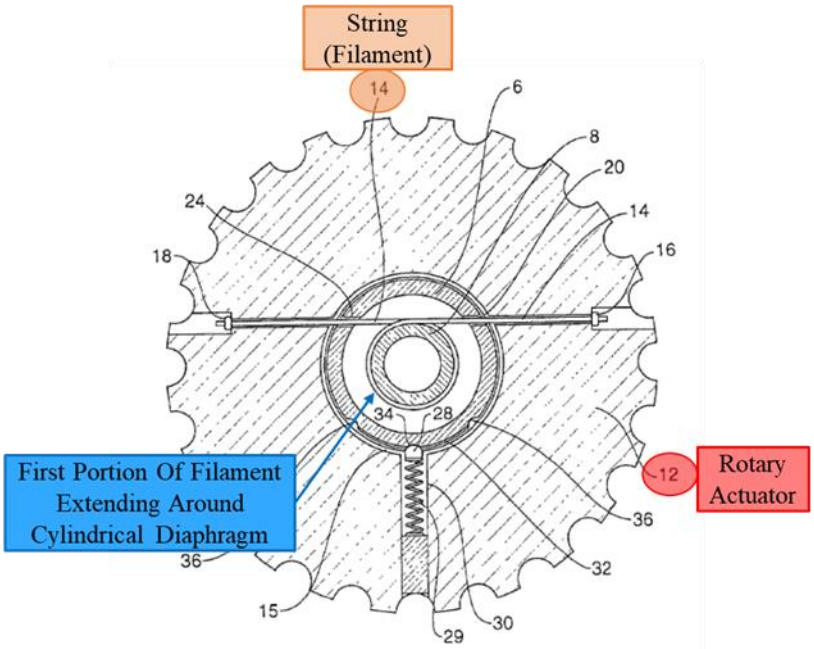

Fig 3

(Ex. 31 at [0031], Fig. 3).

56. For the reasons I provide in detail below, a person of ordinary skill in the art would have been motivated and found it obvious to combine Hartley's string/suture/band with the hemostasis valves in Schaffer. Accordingly, based on my review of these references, I believe that the combination of Schaffer with Hartley ***or*** Eller also renders Claim 1 obvious.

1. <u>Independent Claim 1</u>

57. Based on my review of the prior art, it is my opinion that Schaffer anticipates Claim 1 or renders Claim 1 obvious in combination with Hartley.

a. <u>Preamble</u>

58. The preamble of Claim 1 recites: "A valve, comprising." If the preamble is limiting, Schaffer and Hartley disclose a "valve". If the preamble is limiting, it is my opinion that Schaffer discloses this limitation.

59. Schaffer discloses examples of a "fluid-stasis valve for use with catheters." (Ex. 32 at [0002], [0046]). Schaffer's valve is intended to "block[] the flow of gas or fluid completely and immediately with or without an instrument in place within the gas/fluid path"

during medical procedures where the catheter is inserted in to a patient's vascular system. (*Id.* at [0003], [0008], [0055]).

60. Hartley discloses "an access valve" for use in "medical applications … where it is desired to seal around a catheter or other instrument … to prevent loss of blood or other fluid." (Ex. 31, [0002]-[0004]). Like Schaffer, Hartley's valve is intended for use in "medical applications … where it is desired to seal around a catheter or other instrument … to prevent loss of blood or other fluid." (*Id.* at [0002]-[0004]).

b. <u>Elongate Member</u>

61. Claim 1 next recites "an elongate member defining a lumen." Schaffer discloses this limitation.

62. Schaffer's fluid stasis valve includes a "seal module 100" that comprises "a flexible, elongate tubular structure 101." (Ex. 32, [0049], [0051], [0054], [0075]). The elongate tubular structure 101 defines a lumen 193:

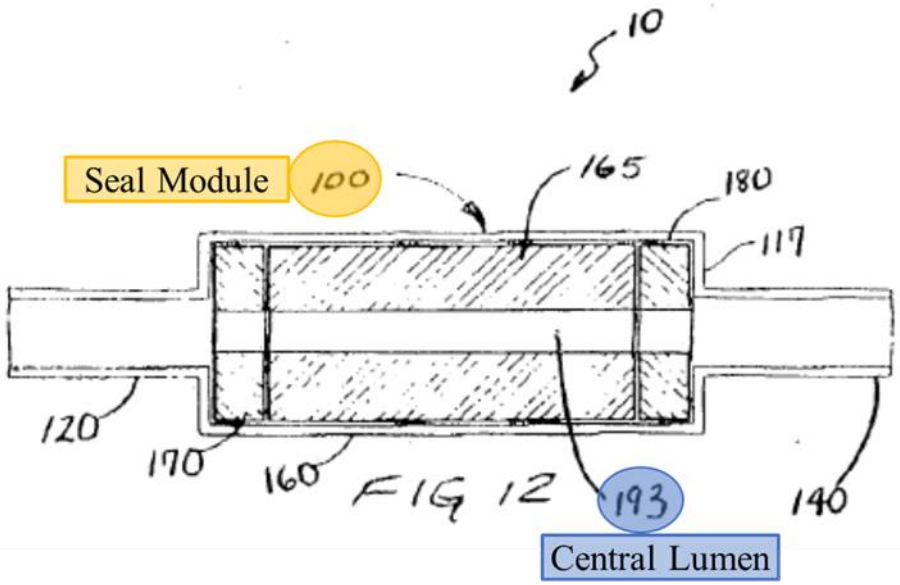

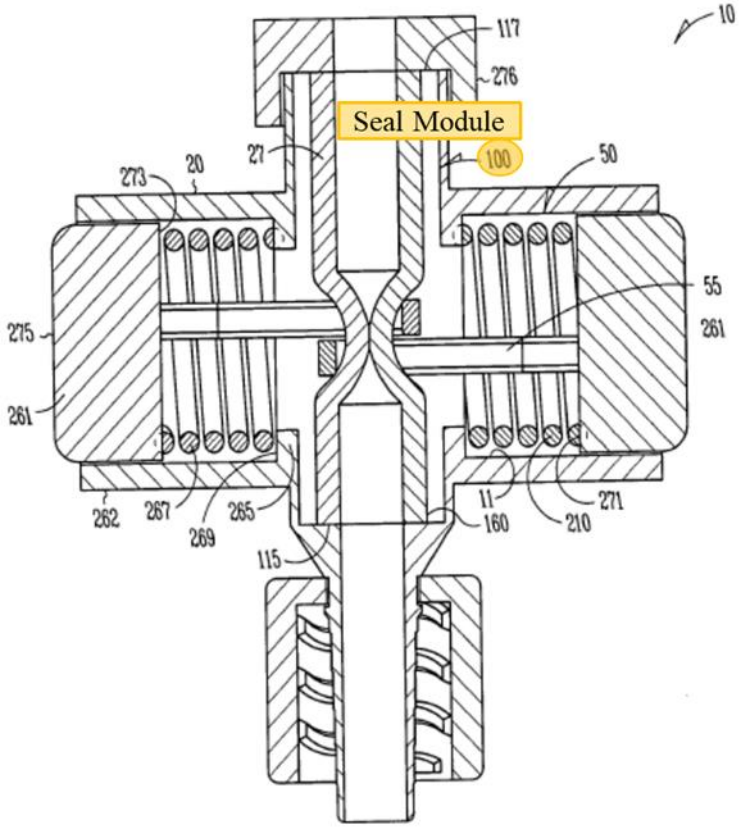

Fig. 32

(*Id.*, [0058], Figs. 12, 32).[2] Schaffer's seal module 100 is therefore "an elongate member defining a lumen."

c. <u>Tensioning Mechanism</u>

63. Claim 1 next recites "an active tensioning mechanism including an actuator coupled to the elongate member via a filament extending at least partially around the elongate member, wherein the actuator is movable between (a) a first position wherein the lumen is constricted and sealed and (b) a second position wherein the lumen is at least partially open". Schaffer discloses these limitations or renders them obvious in view of Hartley ***or*** Eller. Schaffer's active tensioning mechanism is very similar to the active tensioning mechanism described in the '910 patent specification.

[2] While Figure 12 illustrates a seal module 100 comprised of three seal members 160, 170, and 180, Schaffer discloses that "seal module 100 is formed of one or more seal members." (Ex. 32, [0075], Figs. 32, 34).

i. Actuator

64. Schaffer discloses the actuator required by claim 1. Schaffer describes a valve having "two circular actuators 50" on opposite sides of the housing that are "movable from a first position to a second position":

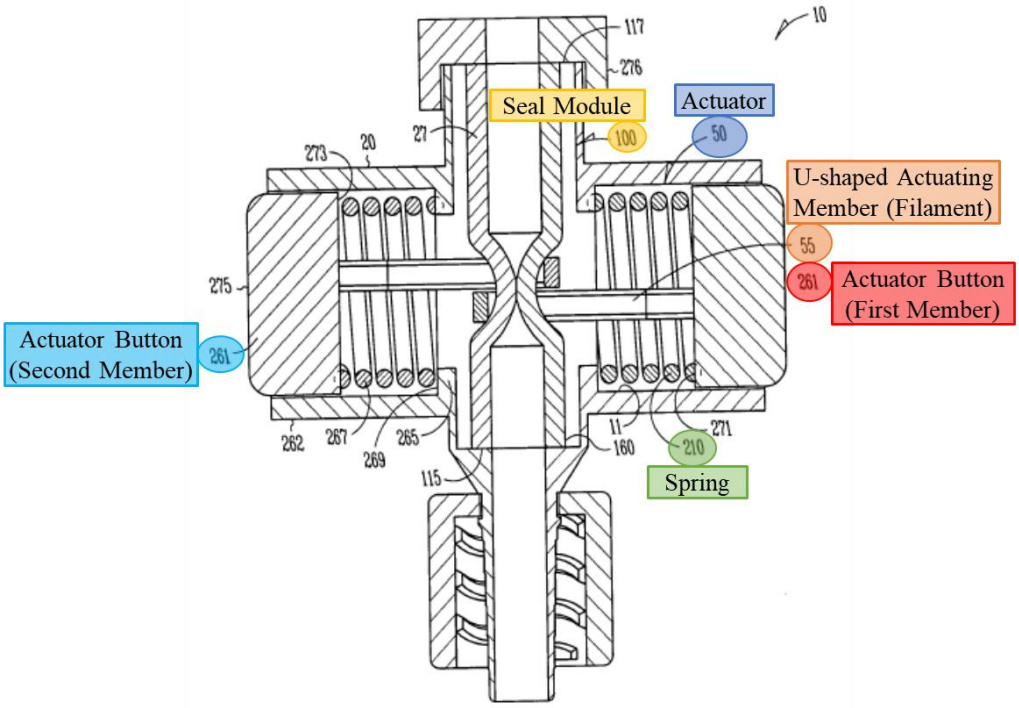

Fig. 32

(Ex. 32, [0075]-[0076], Figs. 31-32). Each actuator 50 includes "an actuator button 261" and a "spring 210." (*Id.*).

65. Schaffer's actuator buttons are each coupled to "an actuating member 55 which, in one option, is U-shaped." (Ex. 32, [0076]). As explained below, the actuator buttons are coupled to the first and second ends of the U-shaped actuating members, which are the claimed "filament." (*Infra* §III. E.1.c.i).

66. The actuator buttons are movable between a first position wherein the lumen is constricted to create a seal and a second position wherein the lumen is at least partially open. Schaffer discloses that in a first position, shown in Figure 32, the actuating members are "at least partially circumferentially disposed about the portion 108 of the seal module 100 depressing and at least partially collapsing a portion 108 of the containment structure 160 by a compressive force 67 (e.g. by a spring 210)":

First Position – Actuator Buttons Undepressed

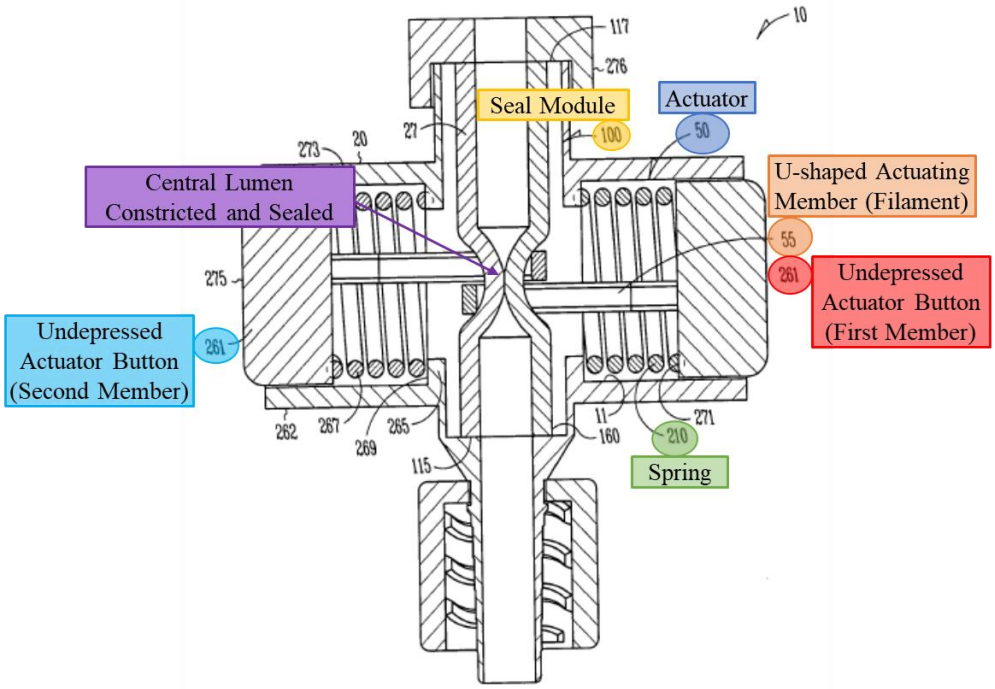

Fig. 32

(Ex. 32, [0077], Fig. 32). As shown in Figure 32 above, the central lumen is completely constricted and sealed in the first position. (*Id.*; *see also id.*, [0008] (disclosing that Schaffer's valve "blocks the flow of gas or fluid completely and immediately with or without an instrument in place within the gas/fluid path)). In a second position, shown in Figure 34 below, the actuator buttons are pressed inwardly, compressing the springs and allowing the actuator members to "disengage opposing outer walls 27 of the seal module 100 allowing the portion 108 of the containment structure 160 to retract to an uncollapsed configuration where gasses and fluids can pass therethrough":

Second Position – Actuator Buttons Depressed

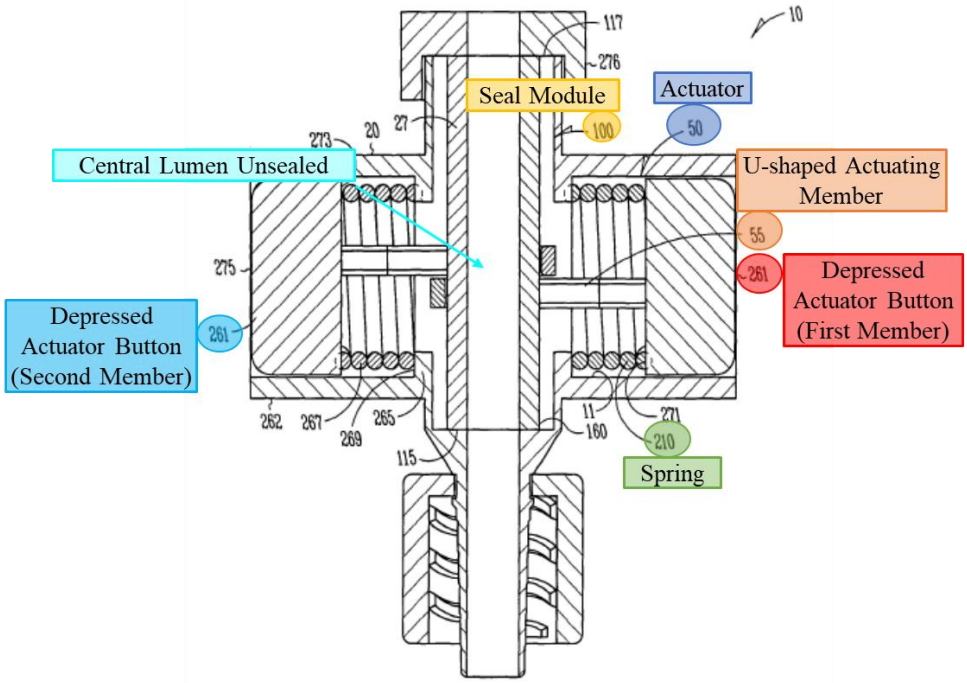

Fig. 34

(Ex. 32, [0077], Fig. 34). Schaffer's actuator buttons are therefore "moveable between (a) a first position wherein the lumen is constricted and sealed and (b) a second position wherein the lumen is at least partially open" as claimed in the '921 patent.

ii. <u>Filament</u>

(a) <u>Schaffer</u>

67. Schaffer discloses the filament required by claim 1. Schaffer's valve includes two U-shaped actuating members coupled to the actuator buttons:

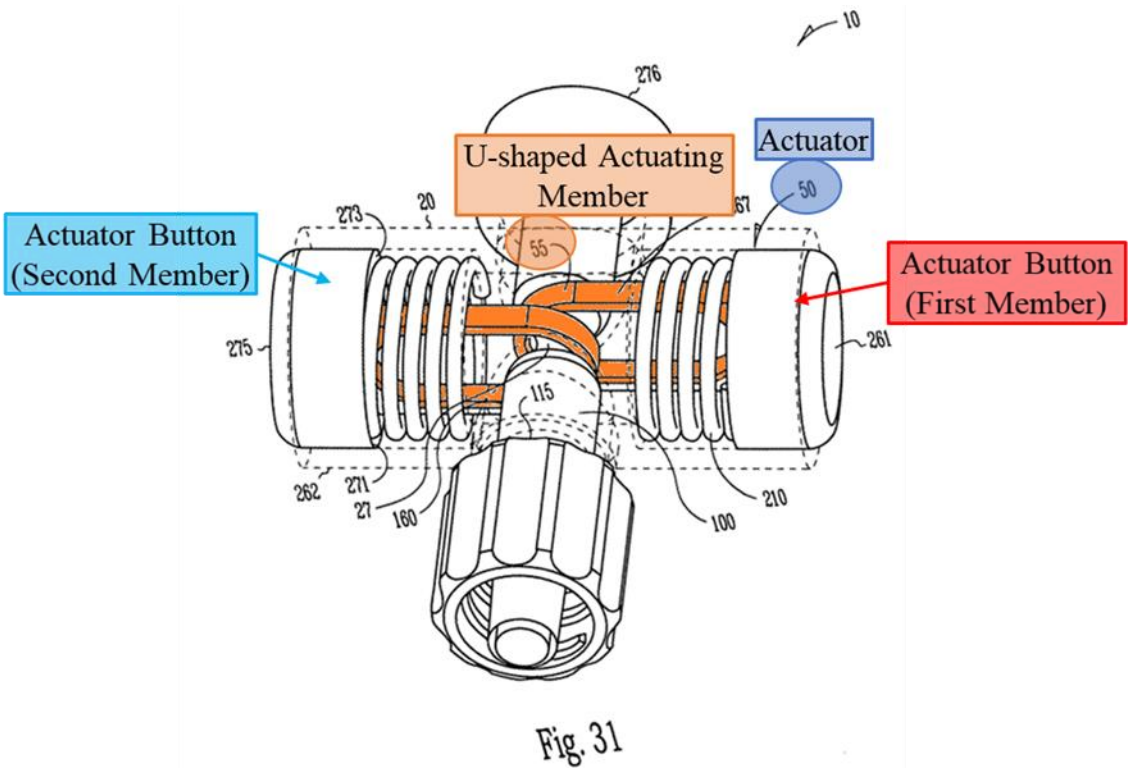

(Ex. 32, [0076], Fig. 31). Schaffer's U-shaped actuating members are a "filament" as claimed in the '921 patent. (*Supra* §E).

68. As I explained in section III.D (Heading: "Claim Construction For '921 Patent") above, a person of ordinary skill in the art would have understood "filament" to mean at least one or more threads, lines, cords, ropes, ribbons, flat wires, sheets, or tapes based on the description in the '921 patent. Schaffer's actuating members are formed from aluminum or plastic, and resemble a ribbon, flat wire, sheet, or tape. (Ex. 32, [0081], Figs. 31-34). The '921 patent states that the filament can be made from a polymer, which includes Schaffer's plastic, or a metal, which includes Schaffer's aluminum. Likewise, the '921 patent states that a filament may be a ribbon, flat wire, sheet, or tape, which includes Schaffer's U-shaped actuating members. Moreover, a person of ordinary skill in the art would have understood that Schaffer's U-shaped actuating members would have preferably been formed from a thin, flexible material. Such a material would have permitted the actuating members to conform, as much as possible, to the outer surface of the seal module and tool inserted through the valve. A thin metallic or plastic flat wire, sheet, ribbon, or tape would have provided the flexibility required for the actuating members to best seal around the tools.

69. As I explained in section III.A (Heading: "Summary of the '921 Patent") above, the '921 patent also discloses that the "the filament 150 can comprise multiple filaments," including two filaments that form a U-shape as shown in Figure 8 below:

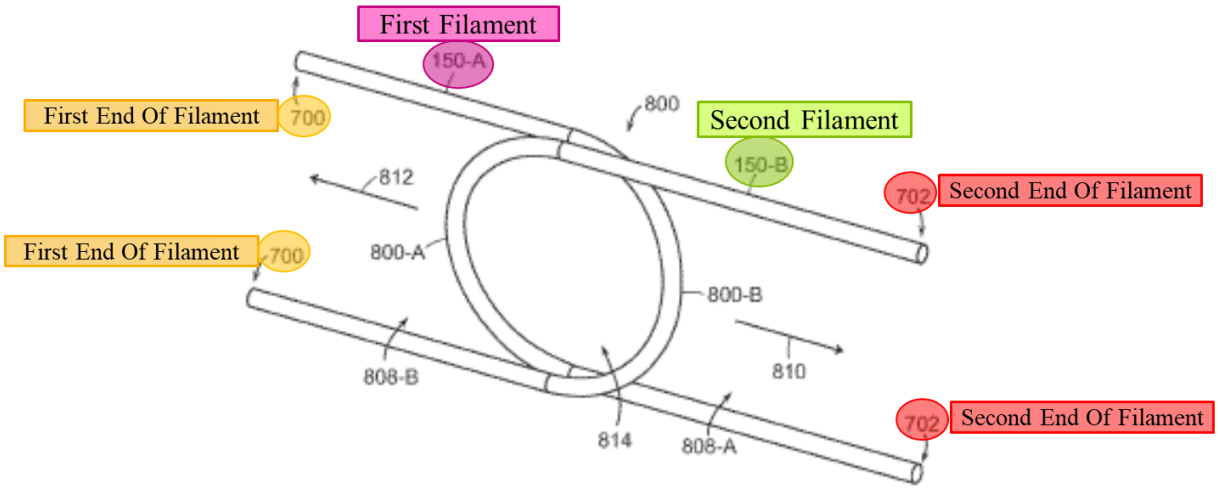

FIG. 8

(Ex. 2, 12:54-13:9, Fig. 8 (emphasis added)). Accordingly, Schaffer's U-shaped actuating members are a filament as disclosed and claimed in the '921 patent. Schaffer's actuating members are "at least partially circumferencially [sic] disposed about the portion of the seal module 100." (Ex. 32, [0076]).

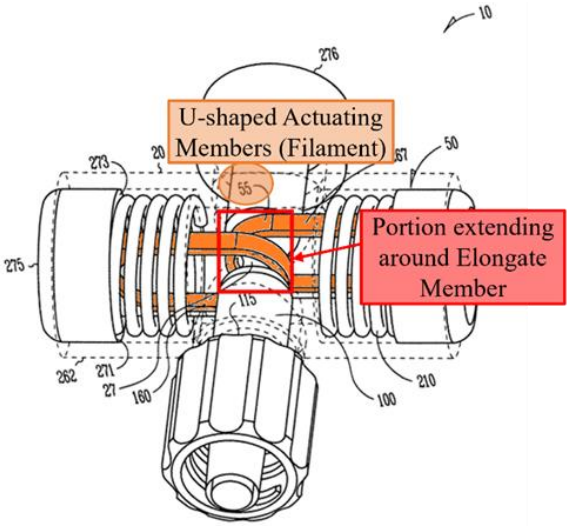

Fig. 31

(*Id.*, [0076], Fig. 31). Thus, Schaffer's actuating members are extending at least partially around the elongate member, as disclosed and claimed in the '921 patent.

(b) Hartley

70. Hartley also discloses a filament as required by claim 1, even if this Court does not adopt the construction of "filament" expressly articulated in the specification and, instead, adopts a narrower construction. Hartley describes a hemostasis valve having a cylindrical housing that holds a "cylindrical elastomeric diaphragm" and a rotatory actuator mounted to the housing:

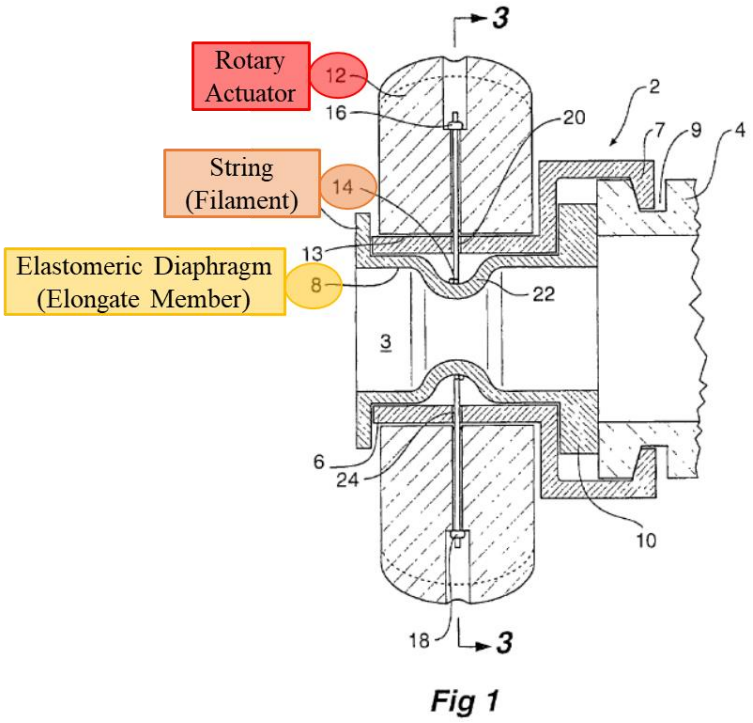

(Ex. 31, [0031], Fig. 1). Hartley's valve also includes a "string 14 … mounted into the rotary actuator." (*Id.*). Hartley discloses that rather than a string, the valve could also use a "suture or band or other suitable material." (*Id.*, [0017]). Hartley's string 14 (or suture/band) is a "filament" because a string is made of at least one or more threads or lines. (*See* Ex. 2, 9:15-17 ("the filament 150 can comprise one or several threads, lines, cords, rope, ribbon, flat wire, sheet, or tape."); *supra* §III. E).

71. As illustrated in Figure 3, Hartley's string/suture/band is secured to the rotary actuator at a first end via a knot 16 and "then passes through an aperture 20 in the cylindrical housing 6 and then is wound preferably twice around the cylindrical diaphragm 8 … and then

passes through a further aperture 24 in the cylindrical housing before being fixed by knot 18 again in the rotary actuator":

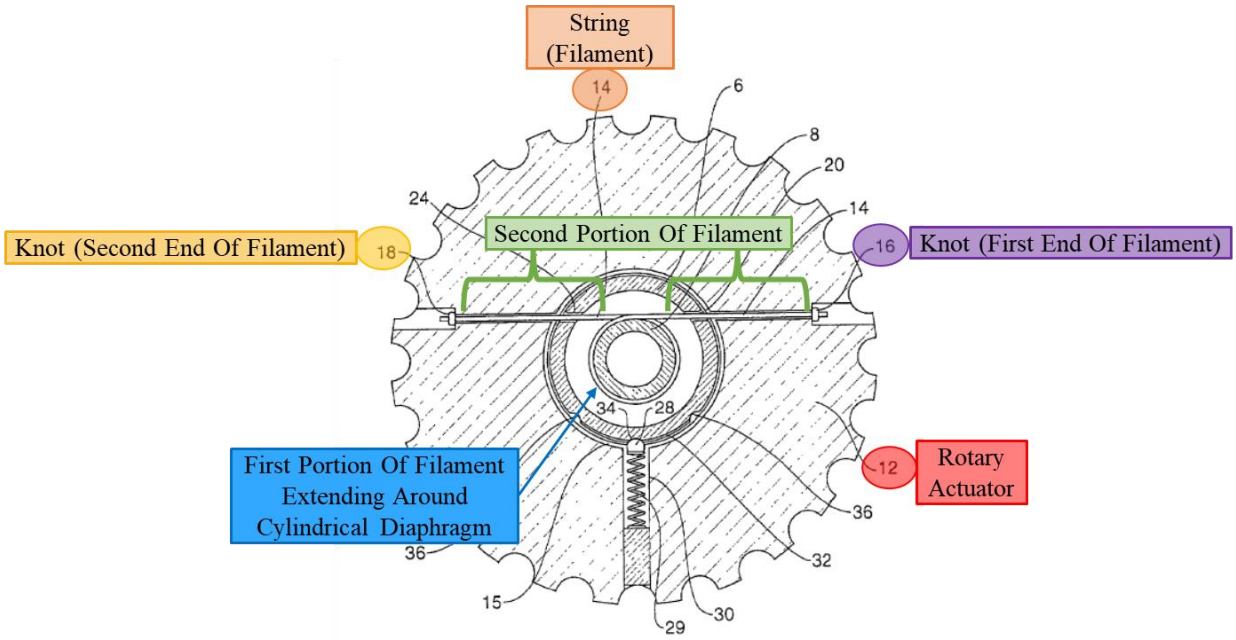

Fig 3

(Ex. 31, [0031], Fig. 3). Thus, Hartley's string satisfies the portions of claim 1 requiring "an active tensioning mechanism including an actuator coupled to the elongate member via a filament extending at least partially around the elongate member." (*Id.*).

72. Hartley discloses that "[r]otation of the rotary actuator 12 with respect to the cylindrical housing 6 will cause the string 14 to be pulled in both directions at once and hence the cylindrical diaphragm 8 to be constricted." (Ex. 31, [0031], [0034], Fig. 4). Hartley further discloses that its valve "will close over a range of diameters of devices passed through the valve or can close completely down to be self sealing." (*Id.*, [0037]).

73. Persons of ordinary skill in the arts would have found it obvious to substitute Hartley's string/suture/band for Schaffer's U-shaped actuating members. The combination of Hartley's string and Schaffer's valve would merely entail substitution of one known element (Hartley's string) for another (Schaffer's U-shaped actuating members) to yield the predictable results of constricting the central lumen of Schaffer's valve to form a seal.

74. Hartley's disclosure that its string can "close over a range of diameters of devices passed through the valve or can close completely down to be self sealing" would have

further motivated persons of ordinary skill in the art to substitute Hartley's string for Shaffer's U-Shaped actuating members. (Ex. 31, [0037]). This ability to accommodate more tools would have been a highly desirable feature to a person of ordinary skill in September 2017.

75. Moreover, persons of ordinary skill in the art had a finite number of materials to select from to constrict the lumen of a tubular member in a hemostasis valve in 2017. Hartley and Schaffer disclose two such options: Hartley's string and Schaffer's two U-shaped actuating members formed from metal (aluminum) or plastic. A person of ordinary skill in the art would have found it obvious to select from these finite, predictable options and, as discussed below, would have had a reasonable expectation of success in implementing them. The combination of Hartley's string and Schaffer's valve would have merely entailed the substitution of one known element (Hartley's string) for another (Schaffer's U-shaped actuating members) and would have yielded the predictable results of constricting the central lumen of Schaffer's valve to form a seal. I do not see any significant technical challenges that a person of ordinary skill would have confronted in substituting Hartley's string for Schaffer's U-shaped actuating members, and I believe that the substitution would have been well within the level of ordinary skill in September 2017.

76. A person of ordinary skill in the art would have had a reasonable expectation of success in substituting Hartley's string for Schaffer's U-shaped actuating members. Hartley teaches a simple method of attaching the string to the rotary actuator –a knot at each end of the string. (Ex. 31, [0031]). Persons of ordinary skill in the art would have reasonably expected that knots could also be used to secure the ends of Hartley's string to Schaffer's actuator buttons. For example, small holes could be made in each of Schaffer's actuator buttons, and each end of the string could be threaded through the hole and knotted on the other side. Such a modification would have been very simple and well within a person of ordinary skill's skills.

77. Also, persons of ordinary skill in the art would have recognized that Hartley's string and Schaffer's U-shaped actuating members function in similar ways and, therefore, no other modifications to Schaffer's valve would be necessary. Hartley collapses the valve lumen to seal the valve by pulling the ends of the string in opposite directions. (Ex. 31, [0031]).

Schaffer also collapses the valve lumen to seal the valve by pulling the U-shaped actuating members in opposite directions. (Ex. 32, [0077]). Thus, if Hartley's string were incorporated into Schaffer's valve, a person of ordinary skill in the art would have reasonably expected Schaffer's springs to pull the ends of the string in opposite directions in the first position, which would cause the string to constrict and collapse the lumen of Schaffer's valve. (*See* Ex. 32, [0077]; Ex. 31, [0031]).

78. A person of ordinary skill in the art would have also reasonably expected that pressing Schaffer's buttons inwardly (i.e., second position) would release the tension on the string, causing the string to loosen around the central lumen and allowing the lumen to at least partially open. (*See* Ex. 32, [0077]; Ex. 31, [0034]). Schaffer discloses that the seal module is made from a "highly deformable, non-compressible material 166 (e.g., plastic)" and is "configured to maintain an open lumen 193 when no compressive force 67 is applied." (Ex. 32, [0054]). A person of ordinary skill in the art would have therefore expected Schaffer's lumen to return to its open configuration when the actuator buttons are pressed inwardly, and the tension on the string is released such that "no compressive force [] is applied" to the lumen. (*Id.*). Moreover, if the resiliency of Schaffer's lumen required adjustment to function with Hartley's string, a person of ordinary skill in the art would have possessed the skills and knowledge to select an appropriate material (e.g., plastic) with the proper resiliency. The prior art disclosed a range of suitable materials for the lumen of a hemostasis valve. (Ex. 31, [0008], [0016]). For example, Schaffer discloses that the materials for the lumen can include "modified vinyl, silicone, polyurethane or a combination thereof," as well as modifications of those materials with "waxes and/or oils or un-cross-linked modifiers." (Ex. 31, [0081]). Similarly, a prior art patent to Eller discloses a variety of sleeves made from "NuSil MED-4755, NuSil MED-4765, and NuSil MED-4014." (Ex. 33, 36:27-60).

79. For these reasons, Schaffer combined with Hartley would render the device of claim 1 obvious, even if this Court does not construe "filament" as set forth in the '921 patent specification.

d. Biasing System

80. Schaffer discloses "a biasing system configured to bias the first member and the second member to the first position." Its biasing system is very similar to the biasing system disclosed in the '921 patent.

81. Schaffer's stasis valve includes "two resilient members 267 (e.g., spring 210) disposed within the actuating member 55":

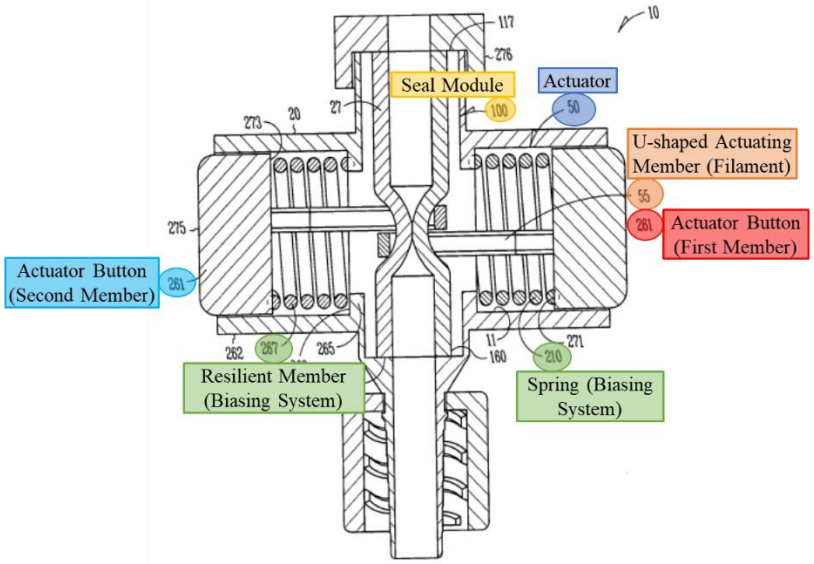

Fig. 32

(Ex. 32, [0076], Fig. 31). Schaffer's resilient members/springs are a "biasing system configured to bias the first member and the second member to the first position." Schaffer's resilient members bias Schaffer's actuator buttons (first and second members) toward the first (i.e., closed) position, which in turn causes the actuating members attached to the buttons to collapse the seal module, preventing the flow of fluid through the valve. (Ex. 32, [0077]).

2. Dependent Claim 10

82. Claim 10 depends from claim 1 and recites: "The valve of claim 1 wherein the actuator is a first actuator, wherein the filament is a first filament, wherein the biasing member is a first biasing member, and wherein the active tensioning mechanism further comprises: a second actuator coupled to the elongate member via a second filament extending at least partially around the elongate member, wherein the second actuator is moveable between (a) a first position wherein the lumen is constricted and sealed and (b) a second position wherein the

lumen is at least partially open; and a second biasing member configured to bias the second actuator to the first position." Schaffer anticipates claim 10.

83. Schaffer discloses a first and second biasing member, a first and second actuator, and a first and second filament:

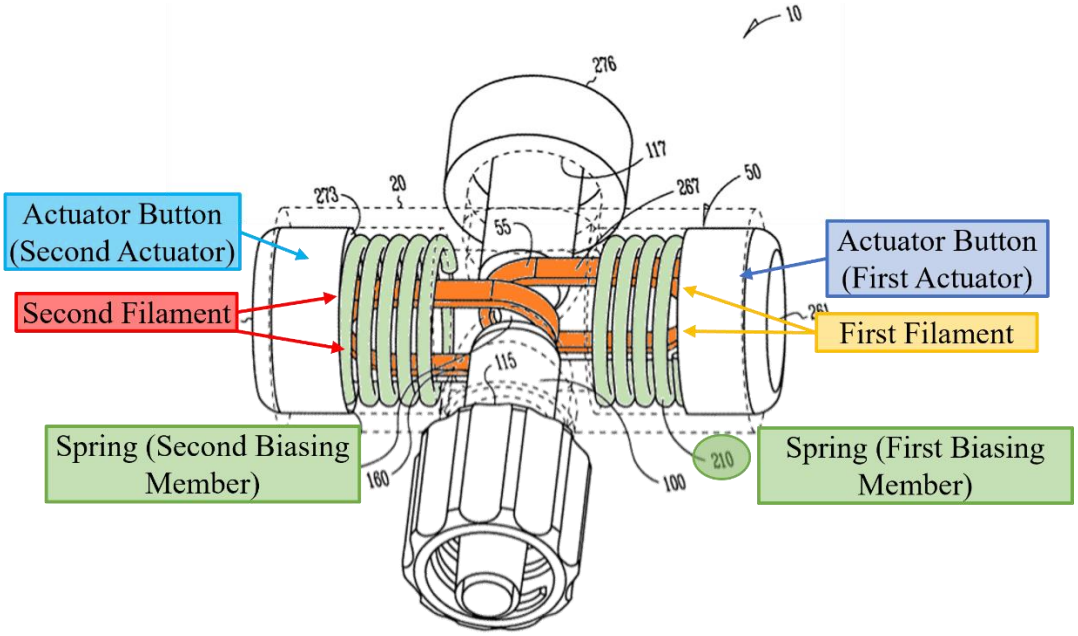

Fig. 31

(Ex. 32, [0075]-[0077], Fig. 31). Schaffer's biasing members are very similar to the biasing members described in the '921 patent.

84. Schaffer's actuator buttons are coupled to the first and second ends of the U-shaped actuating members, which are the claimed "filament." Schaffer's U-shaped actuating members are a "filament" as claimed in the '921 patent. (*Supra* §E) Schaffer's biasing system comprises two compression springs (biasing members), and "the distal end 271 of the resilient members 267 each abut the proximal end 273 of an actuator button 261":

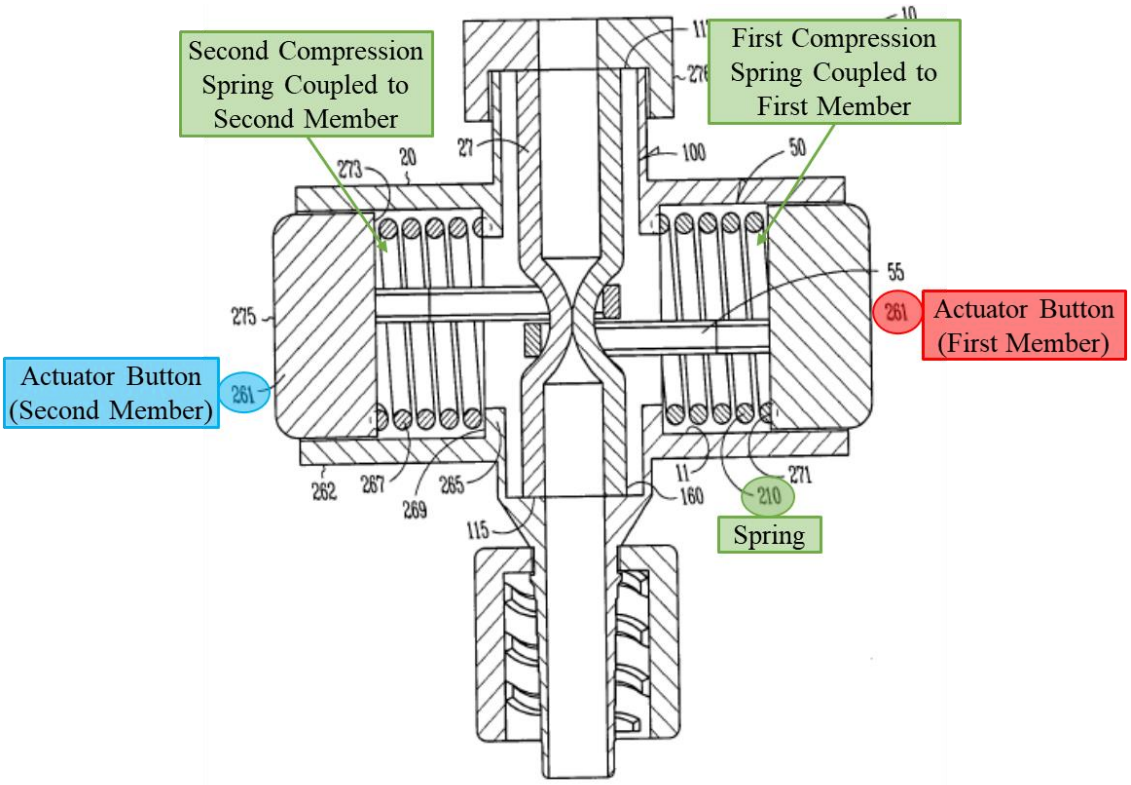

Fig. 32

(Ex. 32, [0076], Figs. 31-34). Schaffer collapses the valve lumen to seal the valve by pulling the U-shaped actuating members in opposite directions. (Ex. 32, [0077]). Schaffer discloses that the seal module is made from a "highly deformable, non-compressible material 166 (e.g., plastic)" and is "configured to maintain an open lumen 193 when no compressive force 67 is applied." (Ex. 32, [0054]). A person of ordinary skill in the art would have therefore expected Schaffer's lumen to return to its open configuration when the actuator buttons are pressed inwardly, and the tension on the string is released such that "no compressive force [] is applied" to the lumen. (*Id.*). Thus, Schaffer's system anticipates claim 10 of the '921 patent.

F. <u>Claims 1 and 10 of the '921 Patent Cannot be Valid and Infringed by Imperative Care's Symphony</u>

85. As explained above, Schaffer's hemostasis valve depicted in Figures 31-34 has the same components in the same arrangement as the valve described and claimed in the '921 patent. For this reason, claims 1 and 10 of the '921 patent are invalid.[3]

[3] I also recognize that if the claims are construed to be limited to what is disclosed on

86. I am aware that Imperative Care's Symphony Thrombectomy System has a hemostasis valve. I have reviewed images of Symphony's hemostasis valve and see that Schaffer's valve is much more similar to the claimed valve (and the ones shown in the specification) than Symphony's hemostasis valve. Thus, the '921 patent claims are either invalid or not infringed.

87. The Symphony hemostasis valve includes buttons on the Symphony handle that the user can push to open the valve.

88. Inside the housing, the valve includes two levers (one on each side of the valve) attached to four torsion springs (2 on each side of the valve). The buttons interact with the levers, not the springs. This is a difference between Symphony and the valves described in the '921 Patent and Schaffer.

---

the '921 patent (or something equivalent to that disclosure), Shaffer would still show the obviousness of the claims because it shows a device that is very similar to that disclosed in the '921 patent.

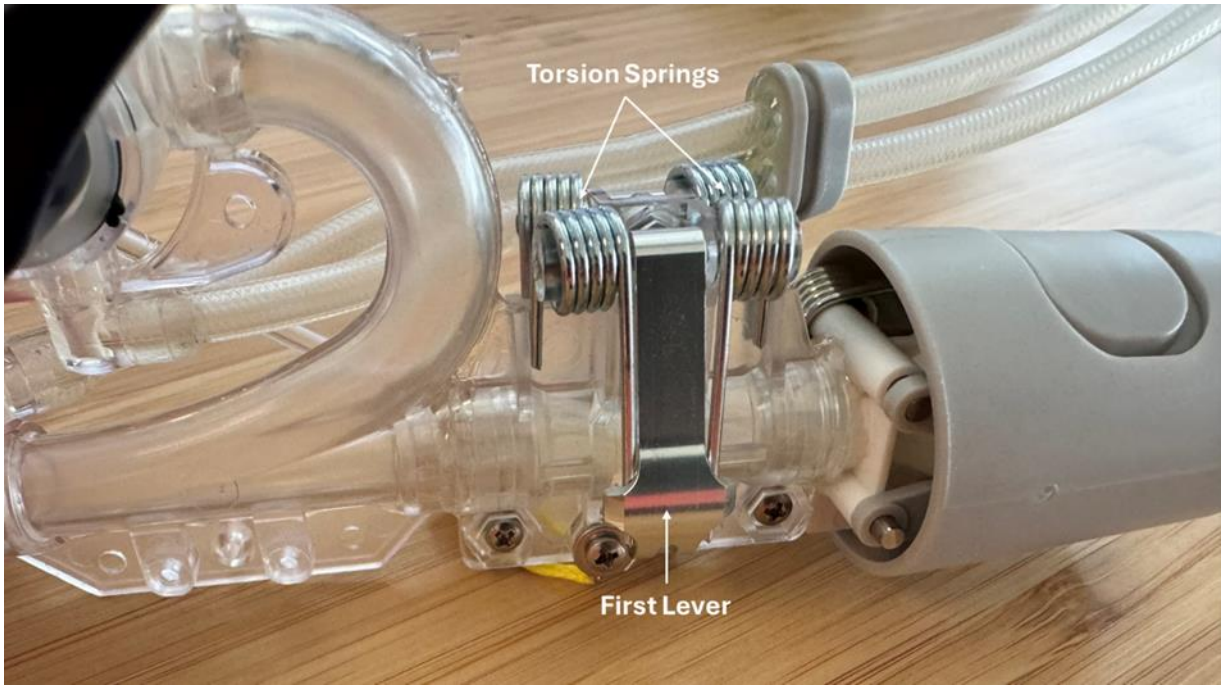

89. The valve is opened and closed by two sutures that extend from one side of the valve to the other and, when the valve is closed, collapse a tube that runs through the center of the valve. The sutures wrap around a portion of the levers and are fixed in place with screws. As shown, the ends of the sutures are free (i.e., not fixed to any structure) within the housing.

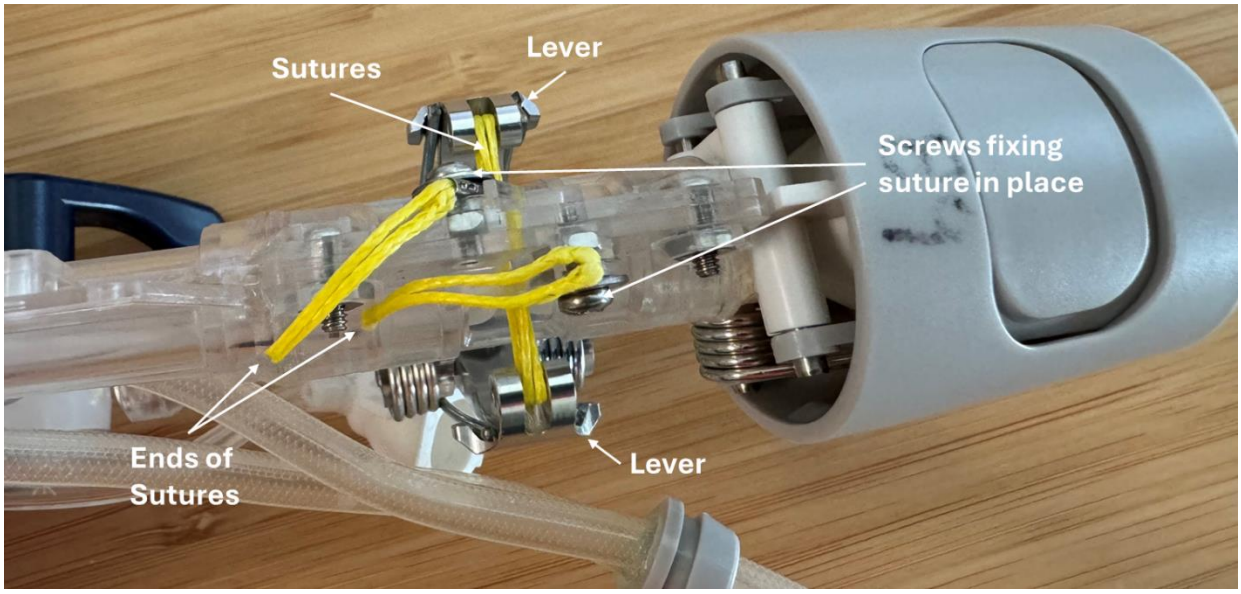

90. The configuration of the sutures is another difference between Symphony and the valves described in the ’921 Patent and Schaffer. In the ’921 Patent and Schaffer, the ends of the filaments are attached to the buttons (or actuators). That is not true in the Symphony

valve where the ends of the sutures are free and a central portion of the suture is fixed in place by a screw.

91. For these reasons, the valves described and claimed in the '921 Patent are much more similar to Schaffer than they are to Symphony's hemostasis valve. The result is that Inari cannot try to narrowly construe claims 1 and 10 and argue that Symphony infringes those claims while also arguing that the '921 Patent is distinguishable and valid despite Schaffer's disclosure.

IV. THE '910 PATENT

A. Summary of the '910 Patent

92. The '910 patent is titled "System for Treating Embolism and Associated Devices and Methods" and describes an aspiration system for intravascular removal of clot material. (Ex. 1 at 4:17-33). The '910 patent explains that the system can treat various clots including PE, cerebral embolism, and DVT. (*Id.* at 4:51-58). The aspiration system includes an aspiration "assembly 10" having a "catheter subsystem 100", "pressure source 140," and "tubing subsystem 120." (*Id.* at 5:28-30). The catheter subsystem also has a catheter 102 [orange below] "comprising an elongated shaft defining a lumen 104," and a "valve 106" [yellow below] with a "lumen 109 extending therethrough." (*Id.* at 5:30-40).

93. The '910 patent discloses the pressure source [red below] is "configured to generate (e.g., form, create, charge, build-up, etc.) a vacuum (e.g., negative relative pressure) and store the vacuum for subsequent applications to the catheter subsystem 100." (*Id.* at 6:57-60). "[T]he pressure source can be a pump (e.g., an electric pump coupled to a vacuum chamber) while, in other embodiments, the pressure source can include one or more syringes that can be actuated or otherwise activated by a user of the assembly 10 to generate and store a vacuum therein." (*Id.* at 7:36-41).

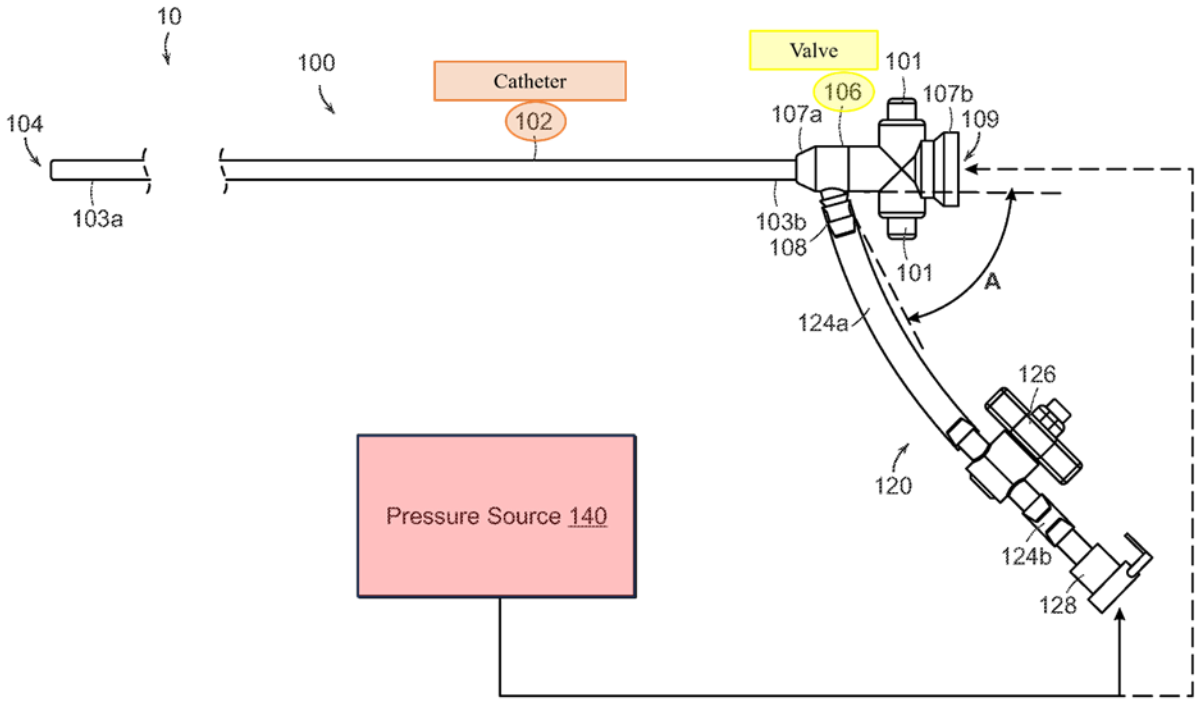

FIG. 1

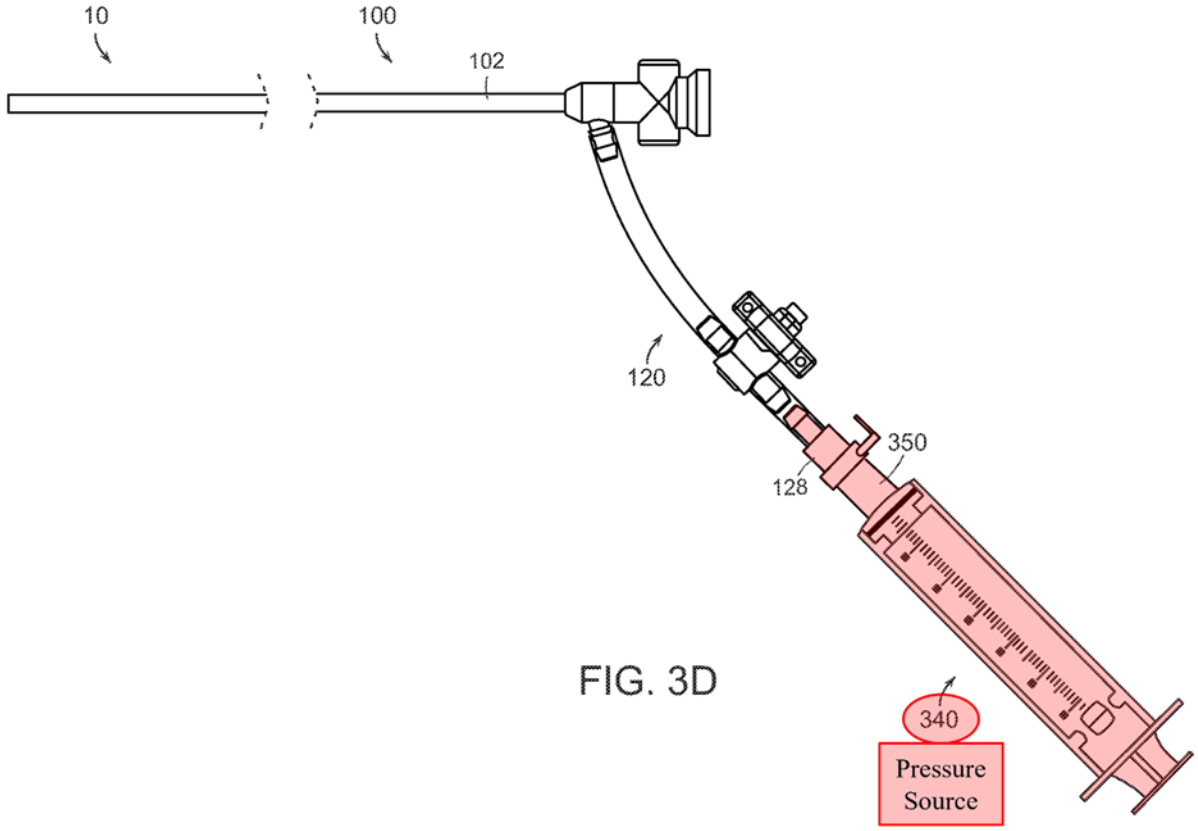

FIG. 3D

(*Id.* at Figs. 1, 3D).

94. The '910 patent explains that the tubing subsystem "fluidly couples the catheter subsystem 100 to the pressure source 140." (*Id.* at 6:6-7). The tubing subsystem can include "one or more tubing sections 124" [green], at least one "fluid control device 126" [purple] such as a stopcock, and at least one "connector 128 for fluidly coupling the tubing subsystem 120 to the pressure source 140 and/or other suitable components." (*Id.* at 6:6-24).

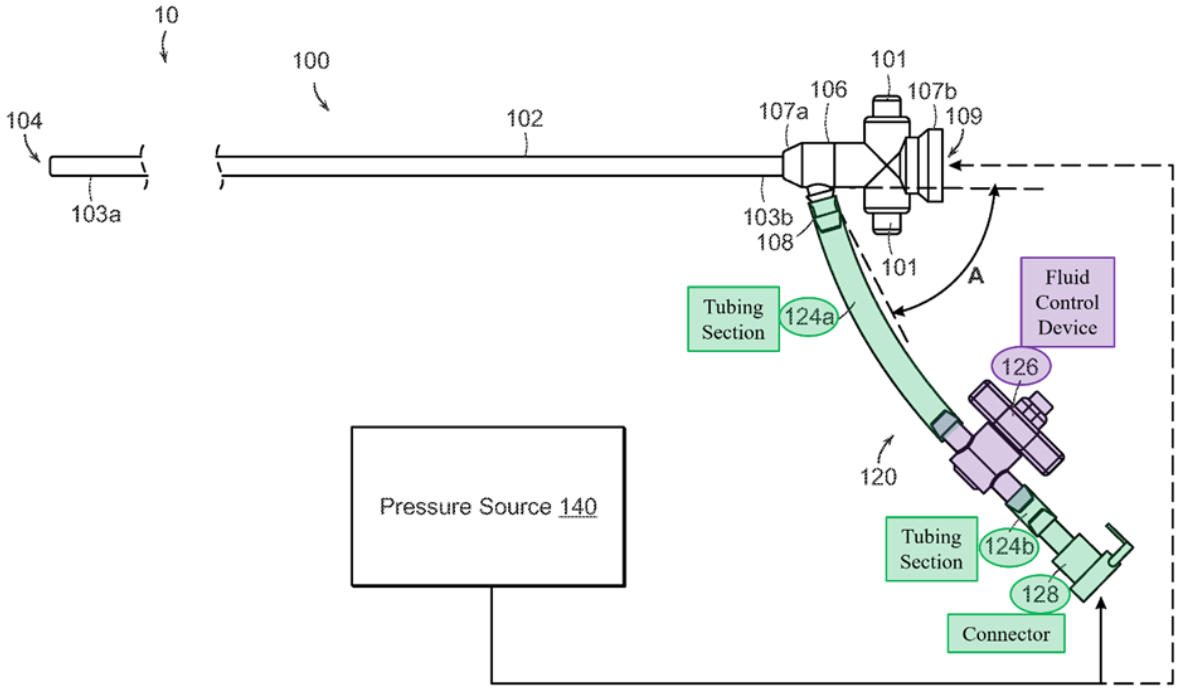

FIG. 1

(*Id.* at Fig. 1).

95. The '910 patent explains that a user "can first close the fluid control device 126 before activating the pressure source 140 to build up vacuum pressure within the pressure source 140 (e.g., a vacuum chamber of the pressure source 140)." (*Id.* at 6:62-66). After pressure is generated, "the user can actuate (e.g., twist a handle of) the fluid control device 126 to open the fluid control device 126." (*Id.* at 18:44-48). Opening the fluid control device 126 will "fluidly connect the pressure source 140 to the catheter subsystem 100 and thereby apply or release the vacuum stored in the pressure source 140 to the lumen 104 of the catheter 102." (*Id.* at 7:3-8).

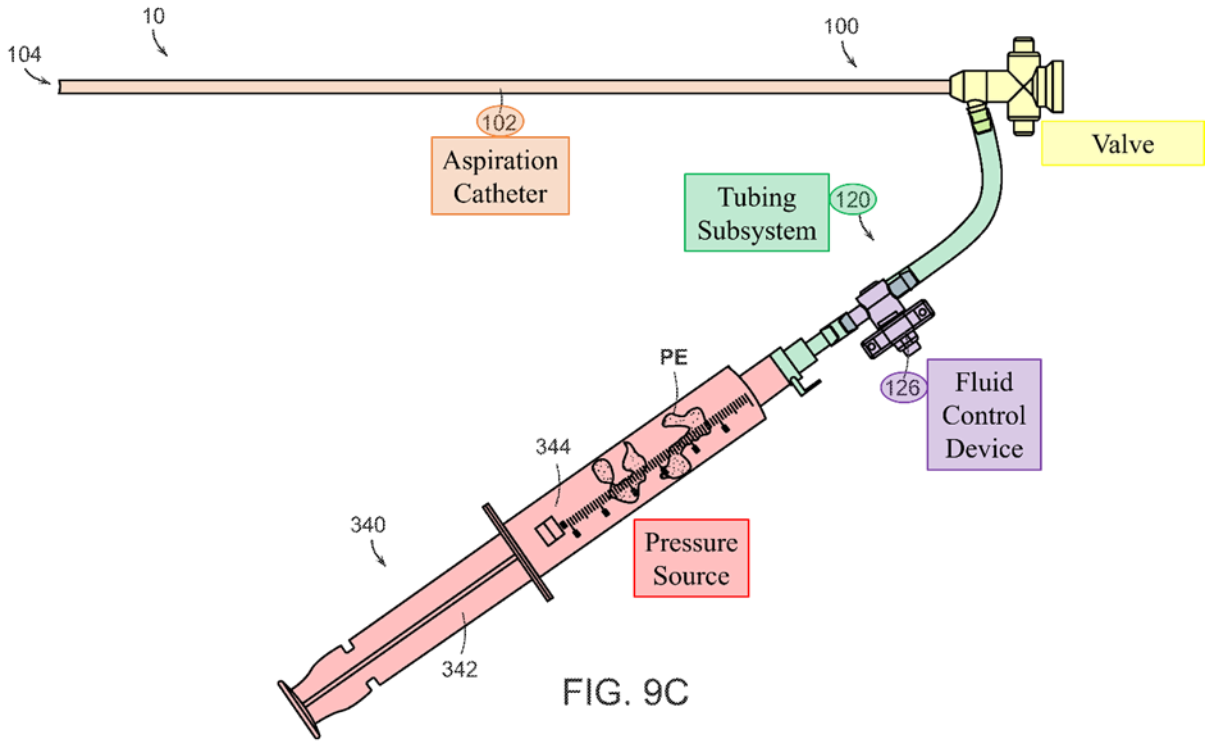

FIG. 9C

(*Id.* at Fig. 9C). The '910 patent also explains that "[o]pening of the fluid control device 126 instantaneously or nearly instantaneously applies the stored vacuum pressure to the tubing subsystem 120 and the catheter 102, thereby generating suction throughout the catheter 102." (*Id.* at 7:8-12).

96. The '910 patent describes variations of the aspiration system described above. For example, the '910 patent describes a variation with "a first aspiration assembly 20 and a second aspiration assembly 30." (*Id.* at 20:60-62). The '910 patent explains that "the first and second aspiration assemblies 20, 30 ("assemblies 20, 30") include some features generally similar to the features of the aspiration assembly 10 described in detail above with reference to FIGS. 1-10B." (*Id.* at 20:62-66). For example, the '910 patent explains that the aspiration system includes a first aspiration assembly 20 having a "first catheter subsystem 1000," "first pressure source 1040," and "first tubing subsystem 1020." (*Id.* at 20:65-21:5). Similarly, the aspiration system includes a second aspiration assembly 30 having a "second catheter subsystem 1100," "second pressure source 1140," and "second tubing subsystem 1120." (*Id.* at 21:5-12).

97. The '910 patent explains that the first tubing subsystem fluidly couples the first catheter subsystem 1000 to the first pressure source 1040 [red below], and the second tubing subsystem fluidly couples the second catheter subsystem 1100 to the second pressure source 1140 [red below]. (*Id.* at 20:65-21:12). The first catheter subsystem also has a first catheter 1002 [orange below] "comprising an elongated shaft defining a lumen 1004," a "first valve 1006" [yellow below] with a "lumen 1009… extending therethrough," and a "first fluid control device 1026" [purple below] (*Id.* at 20-66-21:23). The second catheter subsystem has a "second catheter…1102" [orange below] defining a "lumen…1104," and a "second valve…1106" [yellow below] with a "lumen…1109 extending therethrough," and a "second fluid control device 1126" [purple below]. (*Id.*). The first fluid control device 1026 is configured to "regulate or control fluid flow between (e.g., fluidly connect or disconnect) the first pressure source 1040 and the first catheter subsystem 1000". (*Id.* at 21:20-23). Likewise, the second fluid control device 1126 is configured to "regulate or control fluid flow between (e.g., fluidly connect or disconnect) the second pressure source 1140 and the second catheter subsystem 1100." (*Id.* at 21:23-27).

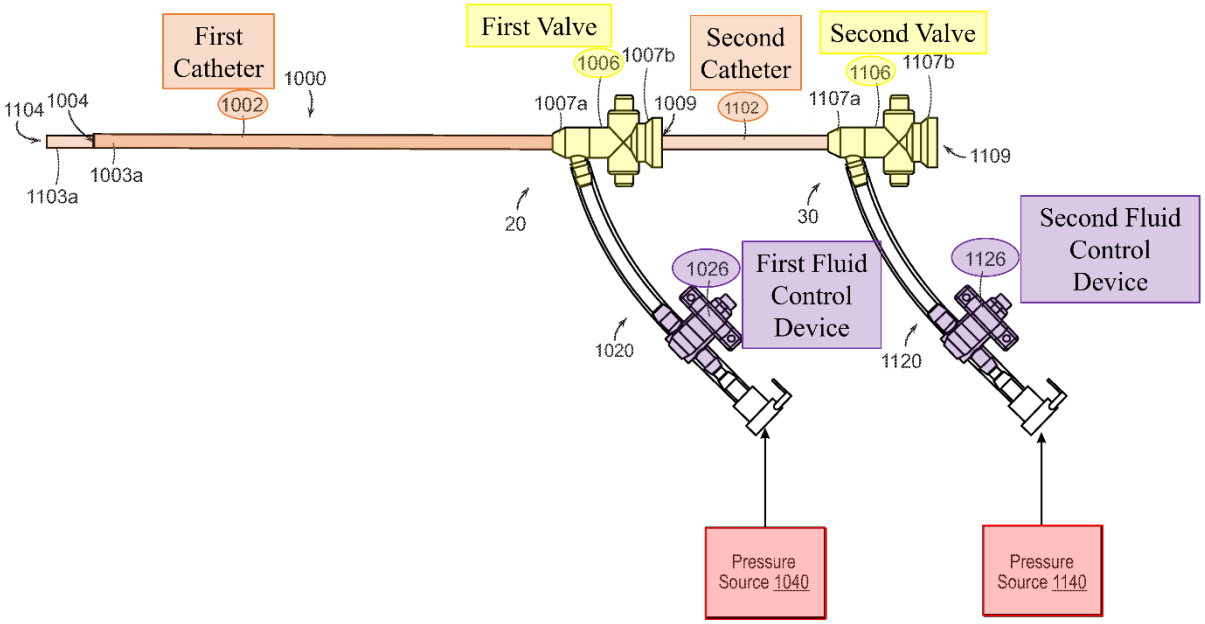

FIG. 11

(*Id.* at Figure 11).

98. The '910 patent explains that the second catheter 1102 can be inserted through the "first valve 1006" and "can be telescoped through the lumen 1004 of the first catheter 1002". (*Id.* at 21:28-36). The second catheter 1102 can "have a size of 16 French or smaller" and the first catheter 1102 can "have a size of 20 French or greater." (*Id.* at 21:36-40)." The '910 patent further explains that the first pressure source and second pressure source can "be activated to generate and store a vacuum" for subsequent application. (*Id.* at 23:26-52). The first fluid control device 1026 can be opened "to generate suction at the distal portion 1003a of the first catheter 1002." (*Id.* at 23:48-52). Similarly, the second fluid control device 1126 can be opened "to apply the vacuum stored in second pressure source 1140 to the lumen 1104 of the second catheter 1102." (*Id.* at 23:30-33). The '910 patent explains that two pressure sources allow the physician to apply different negative pressures to each catheter. (*Id.* at 27:18-33.)

B. <u>The Challenged Claims</u>

99. The challenged claim is Claim 1 of the '910 patent. The challenged claim is an independent claim.

100. Claim 1 states:

> 1. A clot treatment system for treating clot material comprising a pulmonary embolism in a vasculaure of a patient, comprising:
>
> a first clot aspiration assembly, including:
>
> a first catheter;
>
> a first pressure source; and
>
> a first fluid control device between the first catheter and the first pressure source, wherein the first fluid control device is movable between (a) a first position in which the first pressure source is fluidly disconnected from the first catheter and (b) a second position in which the first pressure source is fluidly connected to the first cathteter,
>
> wherein the first pressure source is configured to generate vacuum pressure while the first fluid control device is in the first position, and
>
> wherein, upon movement of the first fluid control device from the first position to the second position, the vacuum pressure is applied to the first catheter to generate suction at a distal portion of the first catheter; and
>
> a second clot aspiration assembly, including:
>
> a second catheter advanceable through the first catheter, wherein the second catheter has a distal portion, wherein the second catheter has a size of 16 French or greater, and wherein the second

> catheter is shaped to be intravascualrly advanced through the vasculature of the patient such that the distal portion of the second catheter is positioned proximate to the pulmonary embolism;
> a second pressure source; and
> a second fluid control device between the second catheter and the second pressure source, wherein the second fluid control device is movable between (a) a first position in which the second pressure source is fluidly disconnected from the second catheter and (b) a second position in which the second pressure source is fluidly connected to the second catheter,
>
> > wherein the second pressure source is configured to generate vacuum pressure while the second fluid control device is in the first position, and
> > wherein, upon movement of the second fluid control device from the first position to the second position, the vacuum pressure is applied to the second catheter to generate suction at the distal portion of the second catheter to generate suction at the distal portion of the second catheter to aspirate blood and at least a portion of the pulmonary embolism into the second catheter.

(Ex. 1 at Claim 1).

C. <u>Prosecution History</u>

101. I have reviewed the ’910 patent’s prosecution history. I see that the Patent Examiner issued a single non-final office action. (Ex. 1022 at 18-25.) The Examiner allowed then-pending claim 1 but noted that Garrison “teaches all of the limitations discussed above” except for teaching a “second catheter advanceable through the first catheter.” (*Id.* at 22). The Examiner states:

> Garrison (US 20150173782 A1) teaches all of the limitations as discussed above and Garrison further teaches a second clot aspiration assembly (second aspiration assembly connected to line (2045), see Figure 33), including: a second catheter (flow line (2045)); and a second pressure source (3425) configured to be fluidly coupled to the second catheter (see Figure 33) and to generate suction at a distal portion of the second catheter (aspiration source 3425) provides suction to the distal portion of the flow line (2045), see Figure 33). However, Garrison fails to teach a second catehter advanceable through the first catheter. The second catheter (2045) does not advances through the first catheter (2025), as shown in Figure 33. There is no reason to advance the second catheter through the first catheter of Garrison. Also Garrison does not explicitly disclose the flow lines (2025 and 2045) advancing through arterial access device (2010) because it would interfere with the thrombectomy device.

(Ex. 1022 at 22.)

102. In the notice of allowance, the Examiner stated "It would be unreasonable to modify the clot treatment device of Garrison to be used for pulmonary embolisms. There is no prior art that teaches all of the limitations." (*Id.* at 7.) The prior art I rely upon below addresses the limitations that the Examiner thought were missing from the prior art.

D. <u>Claim Construction</u>

103. I understand that I should give the claim language its ordinary and customary meaning as understood by a person of ordinary skill in the art at the time of the earliest applicable priority date (August 2018) and in accordance with the specification and prosecution history. I have applied this standard in my analysis. I have not identified any other terms that require further construction by the Court to address the invalidity of Claim 1.

E. <u>Garrison and Laub Render Claim 1 Of The '910 Patent Invalid</u>

104. Garrison describes an aspiration system "to provide aspiration and passive flow reversal for the purpose of facilitating removal of the occlusion as well as minimizing distal emboli." (Ex. 29 at [0007]). As shown in Figure 34 below, Garrison describes an example of an aspiration system that has a first aspiration catheter, a second aspiration catheter, an aspiration source (e.g., aspiration pump), and a fluid control device to enable suction.

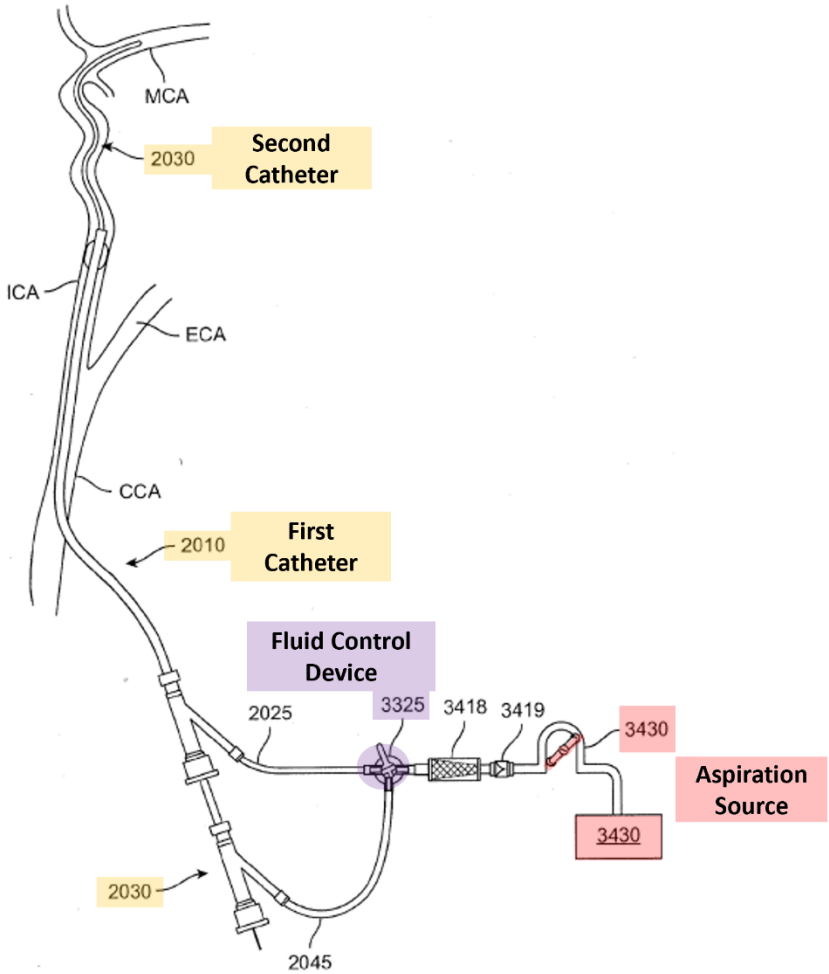

FIG. 34

(*Id.* at Fig. 34).

105. Garrison also describes an embodiment in which the clot treatment system includes a second aspiration source 3425 [red]:

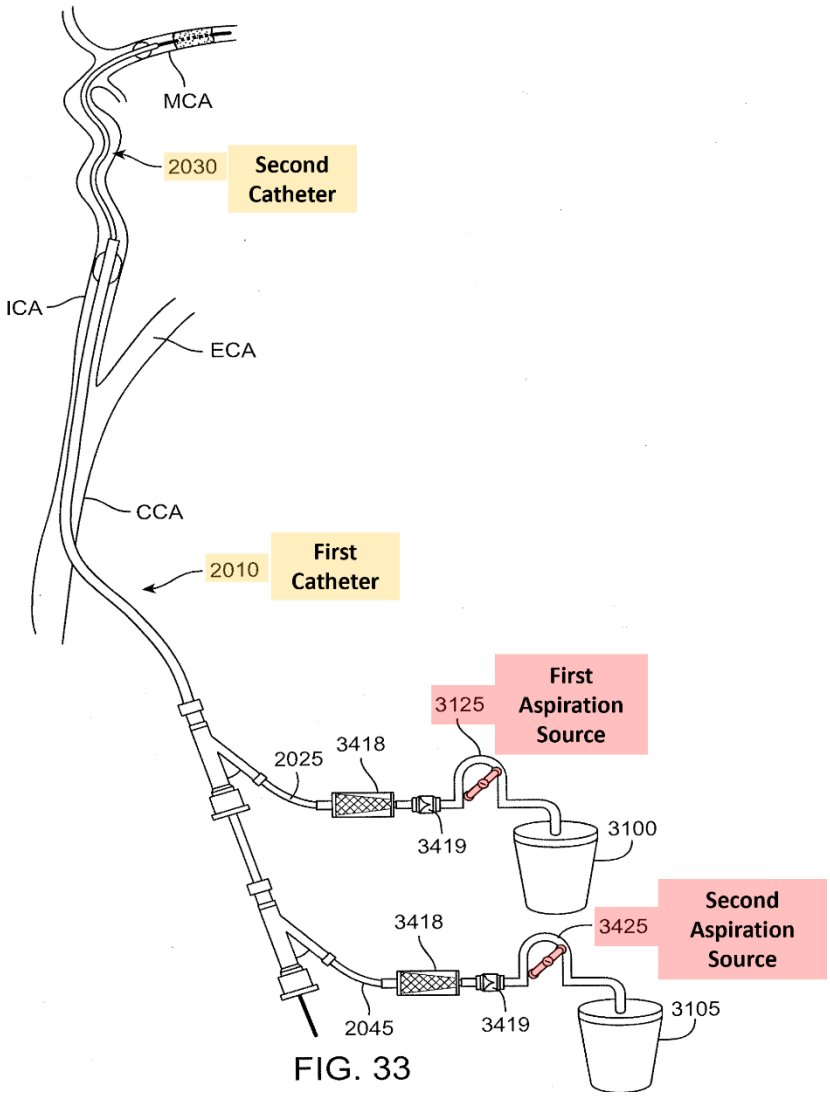

FIG. 33

(Ex. 29, [0131], Fig. 33). Garrison states, "the flow line 2045 of the catheter 2030 is additionally or alternately connected to a separate aspiration source 3425 and delivery location, such as receptable 3105." (*Id.* at [0131]). Garrison further explains that "the aspiration source 3425 and delivery location may be combined into a single device such as a syringe." (*Id.*).

106. Laub describes an aspiration system "to aspirate thrombi and/or other unwanted material from the patient's vasculature." (Ex. 1021 at [0005]). For example, Laub may be used "to remove clots from patients suffering from or at risk of pulmonary embolisms." (*Id.*). As shown in Figure 1A below, Laub describes an example of an aspiration system that has an aspiration catheter 200 (e.g., first catheter) [orange], a pump (e.g., aspiration pump) [red], and a control panel [purple] to enable suction:

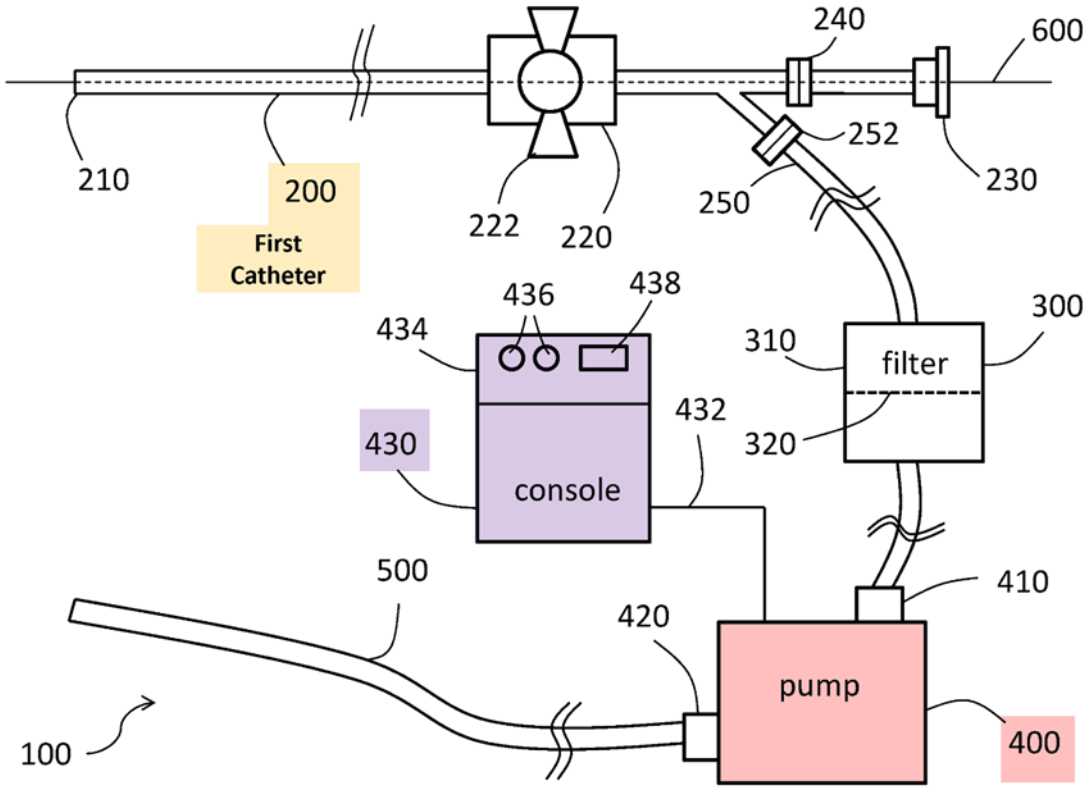

FIG. 1A

(*Id.* at Fig. 1A).

107. Laub further explains that the aspiration system enables "other devices not shown which may be inserted through aspiration catheter 200 via working port 230." (*Id.* at [0035]). These devices "include but are not limited to other wires, balloon catheters, diagnostic catheters, baskets, optical fiber, thrombolysis tools, needles, cutters, biopsy devices, and other surgical implements known in the art." (*Id.*). Thus, Laub discloses that a second aspiration catheter may be inserted through the first aspiration catheter 200.

108. Laub's aspiration system can be readily adapted as needed. For example, Laub discloses that aspiration catheter 200 can have a "French size of at least 5 Fr." up to a "French size of at least 20 Fr." (*Id.* at [0028]). Further, Laub explains that aspiration catheter 200 (e.g., first aspiration catheter) can have a "lumen diameter of at least 5mm." (*Id.* at [0029]). As I explain below, a second aspiration catheter of size 16 Fr could be inserted through a first aspiration catheter with a French size of at least 20 Fr and a lumen diameter of at least 5mm.

1. Independent Claim 1

109. Claim 1 is rendered obvious by Garrison in combination with Laub.

a. Preamble

110. Claim 1 recites: "A clot treatment system for treating clot material comprising a pulmonary embolism in a vasculature of a patient, comprising." If the preamble is limiting, Garrison renders this limitation obvious in combination with Laub. Garrison discloses a clot treatment system "to provide aspiration and passive flow reversal for the purpose of facilitating removal of the occlusion as well as minimizing distal emboli." (Ex. 29, [0007]). Garrison's system includes a first and second catheter [orange], at least one pressure source (e.g., aspiration source) [red], and at least one fluid control device [purple]:

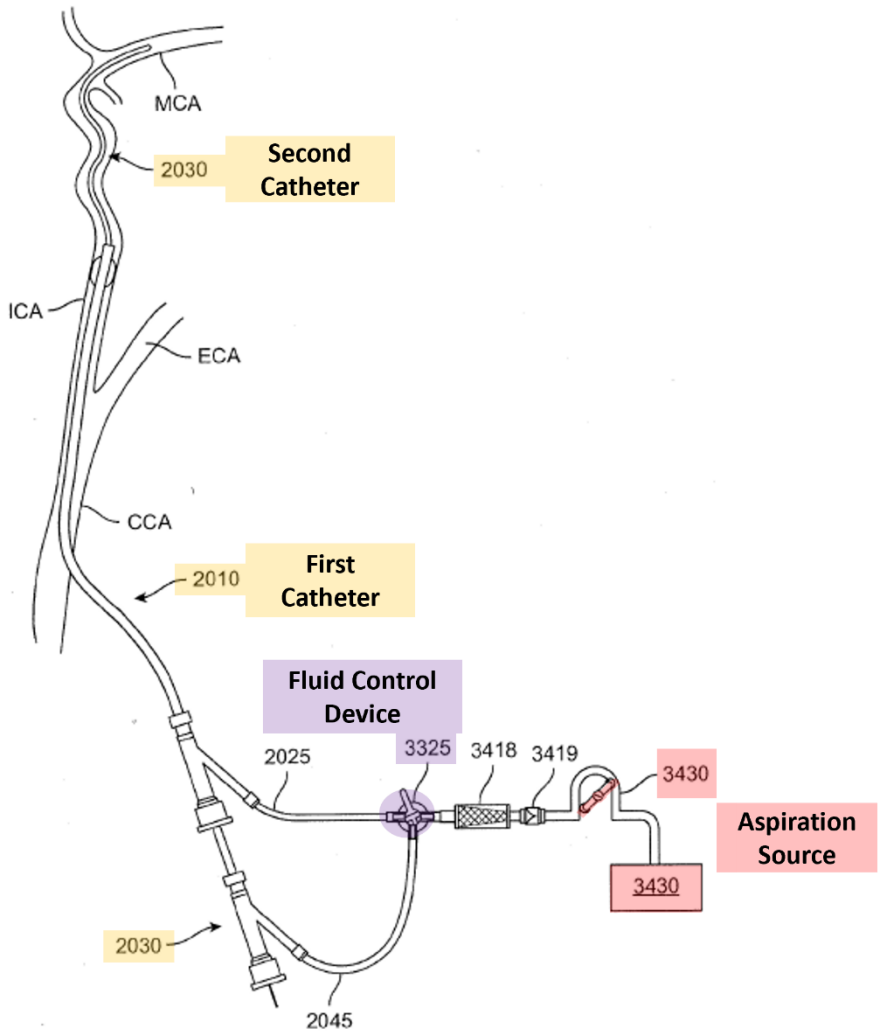

FIG. 34

(*Id.*, Fig. 34; *see also id.*, [0131]-[0134] (describing Figure 34 and related figures)).

111. While Garrison focuses on the "treatment of cerebral occlusions," Garrison's catheter could also be used to treat other types of clots, including pulmonary embolisms and deep vein thrombosis ("DVT"). (Ex. 29, [0002]). Garrison explains that cerebral occlusions are more difficult to treat than occlusions in larger vessels (e.g., pulmonary embolisms and DVT) due to "special access challenges." (*Id.* at [0042]). Garrison explains that the "access route is long, often tortuous and may contain stenosis plaque material in the aortic arch and carotid and brachiocephalic vessel origins, presenting a risk of embolic complications during the access portion of the procedure." (*Id.*). Additionally, "the cerebral vessels are usually more delicate and prone to perforation than coronary or other peripheral vasculature." (*Id.*). To address these challenges, Garrison describes catheter with small diameters and enhanced flexibility. (*Id.*; *see also id.*, [0109] (describing a "very flexible, kink resistant and collapse resistant catheter with a thin wall and large inner diameter")). Thus, while an aspiration catheter designed to treat pulmonary embolisms or DVT may not be configured to be positioned proximate a cerebral embolism due to its size or stiffness, a catheter designed to treat cerebral emboli ***is*** configured to be positioned proximate emboli in other parts of the vasculature, including pulmonary embolisms and DVT. Moreover, some overlap exists between the size of the vessels having a pulmonary embolism or DVT and a cerebral occlusion. For example, the middle cerebral artery ("MCA"), internal carotid artery ("ICA"), and external carotid artery ("ECA") can each have a similar diameter to some deep veins in the leg. A smaller diameter, more flexible catheter typically used to treat cerebral occlusions could be used effectively to treat pulmonary embolisms and DVT that are challenging to access or reside in smaller blood vessels of the lungs or legs.

112. Moreover, Garrison discloses the insertion techniques and locations necessary to position a catheter proximate a pulmonary embolism or DVT. (*Id.*). For example, Garrison discloses using "transfemoral or transcarotid access approaches" to reach the targeted emboli. (Ex. 29, [0048]). Similar access sites, and methods of access, can be used to reach a pulmonary

embolism or DVT. (*See e.g.*, Ex. 1, 17:7-8 ("Access to the pulmonary vessels can be achieved through the patient's vasculature, for example, via the femoral vein.").

113. Laub's aspiration system is configured to treatment of pulmonary embolisms. Laub states, "Systems according to certain embodiments of the present invention may be used, for example, to remove clots from patients suffering from or at risk of pulmonary embolisms." (Ex. 1021, [0005]).

114. A person of ordinary skill in the art would have been further motivated to adapt Garrison's system to treat a pulmonary embolism because Laub discloses that aspiration (like the aspiration disclosed in Garrison) can effectively treat a pulmonary embolism. Moreover, the aspiration systems described in Garrison and Laub are similarly configured. Like Garrison, Laub's aspiration system includes an aspiration catheter 200 (e.g., first catheter) that is inserted into a patient's artery or vein until the end of the cannula is proximate the clot material, such as a pulmonary embolism, and a pump (e.g., aspiration pump) that generates suction.

115. A person of ordinary skill in the art would have recognized that Garrison's system would not necessarily have needed any modification to treat pulmonary embolisms. However, some simple modifications could optimize the system to treat pulmonary embolisms, depending on the specific location and size of the clot to be removed, such as increasing the size of the aspiration catheter (and related components), optimizing the flexibility and torque characteristics, and potentially adjusting the suction force. Laub acknowledges that persons of ordinary skill in the art possessed the requisite knowledge to select the appropriate catheter size or adjust suction pressure. For example, Laub describes a range of permissible catheter sizes that a person of ordinary skill in the art can select. (Ex. 1021, [0028]). Likewise, Laub discloses a range of materials that could be used to make the catheters. (*Id.* at [0027]). Thus, Laub presumes that a person of ordinary skill in the art possessed the requisite knowledge to size and make catheters for a specific purpose and I agree with Laub's presumption. In my own time overseeing engineers developing catheter-based medical devices, the engineers routinely optimized catheter size, flexibility, and torque as a standard part of the design process and would adapt catheters and other components for different sized vasculatures, depending on the

location and tortuosity of the target vessel. Even Garrison discloses a range of possible sheath and catheter sizes for its system, further demonstrating that the size of the catheter was not novel or unique. (Ex. 29 (Garrison) at [0063] (describing 6 and 8 French size sheaths); [0070] (describing 10 French size sheaths)). Simply put, a person of ordinary skill in the art in August 2018 possessed the necessary knowledge to select an appropriate catheter size for a given application.

116. It is my opinion that a person of ordinary skill in the art would have found it obvious to adapt Garrison's aspiration system to treat pulmonary embolisms based on Laub, because the adaption would have been the predictable use of prior art elements (Garrison's system) according to their established functions (aspiration of clot material). Based on my experience in the field, I am aware that persons of ordinary skill in the art developing catheter-based medical devices in August 2018 regularly adapted innovations developed for one portion of the vasculature to treat another. For example, the references cited in this declaration illustrate the close relationship between clots and embolisms across the vasculature (e.g., pulmonary embolism, deep vein thrombosis ("DVT"), cerebral embolisms). Laub explains that blood clots tend to form in the larger arteries and move in the direction of blood flow. In some cases, "a thrombus can migrate to the vessels of the brain and cause stroke and possibly death," while in other cases "clots can migrate to the lungs and block the lungs main artery, resulting in a potentially fatal pulmonary embolism." (Ex. 1021 at ¶ [0004]; *see also* Ex. 1023 at 2:13-19 (describing relationship between PE, DVT, and cerebral clots). Thus, DVT can become a pulmonary embolism or cerebral embolism as it travels through the body. Consequently, a person of ordinary skill in the art developing treatments for clots in one part of the body would naturally consult innovations for treating clots in other parts of the body.

117. Garrison specifically suggests combining components with its aspiration systems that come from aspiration system for treating other parts of the vasculature. For example, Garrison states that "it may be desirable to incorporate features on the arterial access sheath in order to minimize flow resistance through the insertable portion of the access sheath." (Ex. 29 (Garrison) at [0070]). Garrison incorporates by reference two patents for this purpose:

(1) U.S. Patent No. 7,998,104 ("Chang"), which describes "a method for treating lesions in the carotid artery of a mammalian body (Ex. 1039, abstract (emphasis added)), and (2) U.S. Patent No. 8,157,760 ("Craido"), which describes "[a] system for use in accessing and treating a carotid artery" (Ex. 1040, abstract (emphasis added)).

118. Garrison also incorporates by reference several patents describing thrombectomy devices having aspiration catheters to remove thrombus. (Ex. 29 at [0144]). Many of these patents describe the use of aspiration catheters for parts of the vasculature outside of cerebral applications. For example, Garrison incorporates U.S. Patent No. 6,481,439 ("Lewis"), which describes methods of treating blocked or occluded blood vessels. (Ex. 1041 at 3:15-17). While Lewis primarily focuses on the treatment of a "catastrophic blockage of a cerebral artery," the patent states that the "present invention, however, will also be useful for treating acute blockages in other portions of the vasculature as well as for treating chronic occlusions in the cerebral, cardiac, peripheral, mesenteric, and other vasculature." (*Id*. at 3:28-39). Garrison also incorporates U.S. Patent No. 5,938,645 ("Gordon"), which discloses "a device adapted to break up and extract clots or thrombi which may form within the coronary artery comprising an improved percutaneous aspiration thrombectomy catheter system." (Ex. 1038 at 1:17-20 (emphasis added)). Thus, Garrison demonstrates that persons of ordinary skill in the art readily borrowed innovations for one part of the vasculature for another.

119. Garrison is not an outlier. Other prior art patents disclose aspiration systems intended for use across all portions of the vasculature. For example, Brady, a U.S patent application published in August 2019, describes "devices intended for removing acute blockages from blood vessels." (Ex. 1024 at [0001]; *see also id*., [0011] ("This invention improves the ability of a catheter to aspirate a clot fully ….")). Brady states, "The invention is particularly suited to removing clot from cerebral arteries in patients suffering acute ischemic stroke (AIS), from coronary native or graft vessels in patients suffering from myocardial infarction (MY), and from pulmonary arteries in patients suffering from pulmonary embolism (PE) and from other peripheral arterial and venous vessels in which clot is causing an occlusion." (*Id*. at [0001] (emphasis added)).

120. Even the ’910 Patent acknowledges that a person of ordinary skill in the art would have understood that aspiration systems for one part of the vasculature could be adapted for other portions of the vasculature. For example, the ’910 patent explains, “Although many of the embodiments are described below with respect to devices, systems, and methods for treating pulmonary embolism, other applications and other embodiments in addition to those described herein are within the scope of the technology (e.g., intravascular procedures other than the treatment of emboli, intravascular procedures for treating cerebral embolism, intravascular procedures for treating deep vein thrombosis (DVT), etc.” (Ex. 1 at 4:51-58 (emphasis added)). The ’910 patent does not identify any reason why its aspiration catheters can be used interchangeability across different parts of the vasculature while other aspiration catheters would not. Rather, the ’910 patent admits a “person of ordinary skill in the art, therefore, will accordingly understand that the technology can have other embodiments with additional elements, or the technology can have other embodiments without several of the features shown and described below with reference to FIGS. 1-25.” (*Id*. at 5:2-7).

121. Simply put, aspiration catheters primarily designed for treating cerebral occlusions, such as Garrison, are very closely related, and even interchangeable in some circumstances, to aspiration catheters for other parts of the vasculature. I have not seen any patents that describe cerebral occlusions as so different from other types of occlusions that an aspiration catheter designed to treat such occlusions would be totally irrelevant to other parts of the vasculature. Such statements would be inconsistent with my experience in developing catheters used to treat cardiovascular disease. For these reasons, it is my opinion that a person of ordinary skill in the art would have found it obvious to use Garrison’s aspiration system to treat pulmonary embolism, with any necessary modifications, based on Laub and the knowledge of a person of ordinary skill in the art.

b. <u>A First Clot Assembly</u>

122. Claim 1 next recites: “a first clot assembly, including: a first catheter; a first pressure source.” Garrison discloses this limitation. Garrison’s aspiration system includes a first clot assembly including a first catheter [orange] configured for placement into fluid

communication with a first aspiration source [red] by way of a flow line (i.e. aspiration tube) [green]:

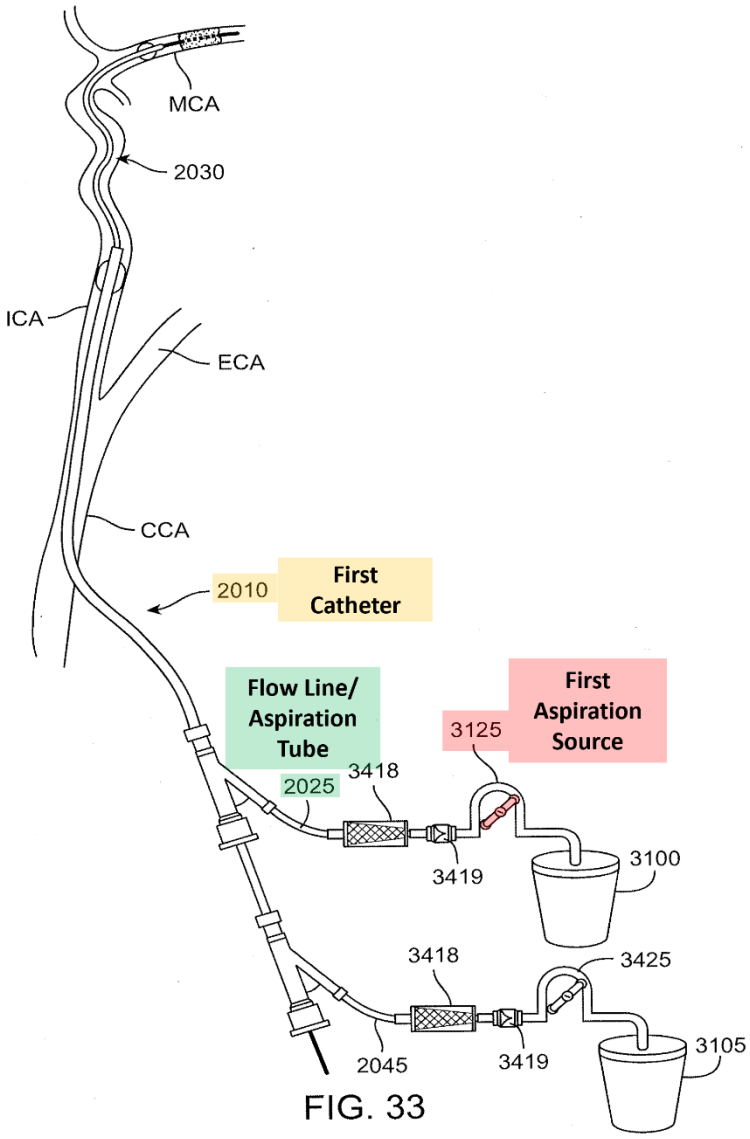

FIG. 33

(Ex. 29, [0131], Fig. 33). Garrison states, "The active source of aspiration may be an ***aspiration pump***, a regular or locking syringe, a hand-held aspirator, hospital suction, or the like." (*Id.*, [0134] (emphasis added); *see also id.*, [0071] ("The flow line 905 may also be connected to an aspiration source such as a pump or a syringe."); [0172] ("Aspiration may be via a syringe, a pump, or other means as disclosed above.")). The listed sources of active aspiration are all "pressure sources" consistent with the term as used by '910 patent. (Ex. 1, 6:57-60).

c. A First Fluid Control Device

123. Claim 1 next recites: "a first fluid control device between the first catheter and the first pressure source, wherein the first fluid control device is movable between (a) a first position in which the first pressure source is fluidly disconnected from the first catheter and (b) a second position in which the first pressure source is fluidly connected to the first catheter." Garrison discloses this limitation. Garrison's aspiration system includes a "valve 3325" between the first catheter and the first aspiration source:

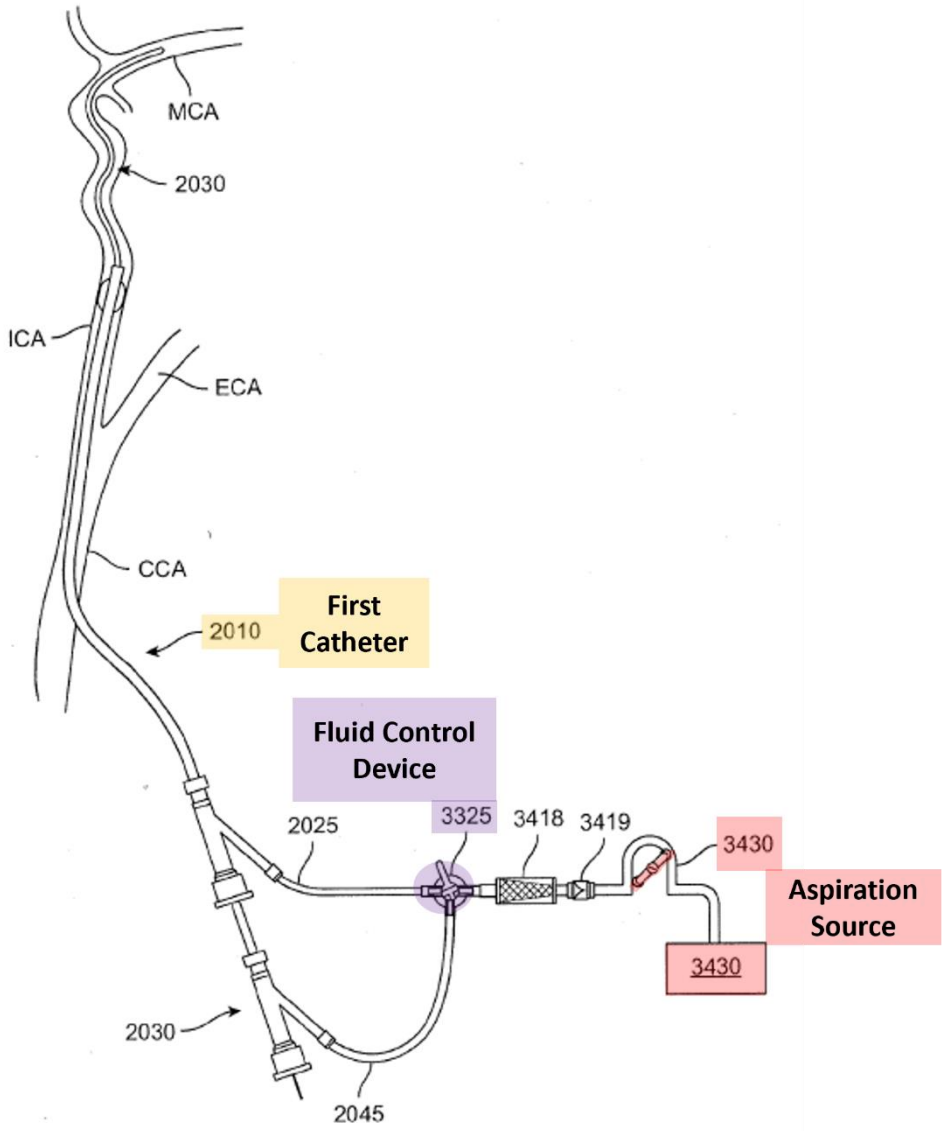

FIG. 34

(Ex. 29, [00132], Fig. 34). Garrison discloses that the "valve 3325 controls which device is connected to the aspiration system 3430." (*Id.*). "The valve may be a 3-way or 4-way stopcock" and "enable one device, the other device, both devices, or neither device to be connected to the aspiration source at any given time." (*Id.*). The valve can also "be a flow controller with a simple actuation which selects the configuration as described above." (*Id.*; *see also id.*, [0133] (describing flow controller)). Both the stopcock and flow controller are fluid control devices. (*See* Ex. 29, [0133] ("the flow control may include one or more control interfaces that a user may actuate to regulate which device is being aspirated")).

124. Garrison describes an embodiment in which "a locking syringe (for example a VacLok Syringe) is attached to the flow controller and the plunger is pulled back into a locked position by the user while the connection to the flow line is closed prior to the thrombectomy step of the procedure." (Ex. 29, [0134]). Once the catheter is positioned near the thrombus, "the user may open the connection to the aspiration syringe." (*Id.*). Garrison discloses that the valve could be a stopcock (*id.*, [0132]) and the aspiration source could be an aspiration pump (*id.*, [0134]). Thus, Garrison includes multiple disclosures of moving a fluid control device to fluidly disconnect a valve between the first catheter and first aspiration source, then moving the fluid control device to a second position to fluidly connect the first catheter and first aspiration source.

d. <u>The First Pressure Source Is Configured to Generate Vacuum Pressure</u>

125. Claim 1 next recites: "wherein the first pressure source is configured to generate vacuum pressure while the first fluid control device is in the first position." Garrison discloses this limitation. Garrison describes an exemplary system in which "a locking syringe (for example a VacLok Syringe) is attached to the flow controller and the plunger is pulled back into a locked position by the user while the connection to the flow line is closed prior to the thrombectomy step of the procedure." (Ex. 29 at [0134]). Once the catheter is positioned near the clot or thrombus, "the user may open the connection to the aspiration syringe" to "enable the maximum level of aspiration in a rapid fashion." (*Id.*. Because the valve, for example the

stopcock 3325 in Figure 34 above, is distal to the first and second chambers, the negative pressure is generated in both the first and second chambers. (*Id.* at Fig. 34).

126. Garrison also discusses testing different catheters by generating a negative pressure in a chamber and then releasing the negative pressure by opening a stopcock. (Ex. 29, [0129], Figs. 56-57). Garrison describes an aspiration assembly having a catheter and syringe. (*Id.*). Garrison states:

> The catheter and syringe were purged of air, the syringe was emptied, and ***then the stopcock was closed***. The ***locking syringe was then pulled back*** the full 30 cc volume and locked in place. A timer was started when ***the stopcock was opened***, and the time was noted at 5 cc, 10 cc, 15 cc and 20 cc of extracted solution in the syringe.

(*Id.* (emphasis added)). Consequently, the first aspiration source was fluidly disconnected from the first catheter, and opened after negative pressure was generated in the first chamber. Thus, Garrison includes multiple disclosures of generating vacuum pressure after a fluid control device is in a closed position.

e. <u>The Vacuum Pressure Is Applied</u>

127. Claim 1 next recites: "wherein, upon movement of the first fluid control device from the first position to the second position, the vacuum pressure is applied to the first catheter to generate suction at a distal portion of the first catheter." Garrison discloses this limitation. As explained above, Garrison describes generating a negative pressure in the aspiration source by closing the fluid control device (e.g., stopcock or flow controller). Once the user generates the negative pressure and positions the tip of the aspiration catheter near the occlusion, "the user may open the connection to the aspiration syringe" or other negative pressure source by actuating the first fluid control device. (Ex. 29, [0134], Fig. 34). As illustrated in Figure 34, the negative pressure generated by the first aspiration source is transferred along flow/aspiration lines [green] which causes suction to be generated at the tip of the catheter [orange]:

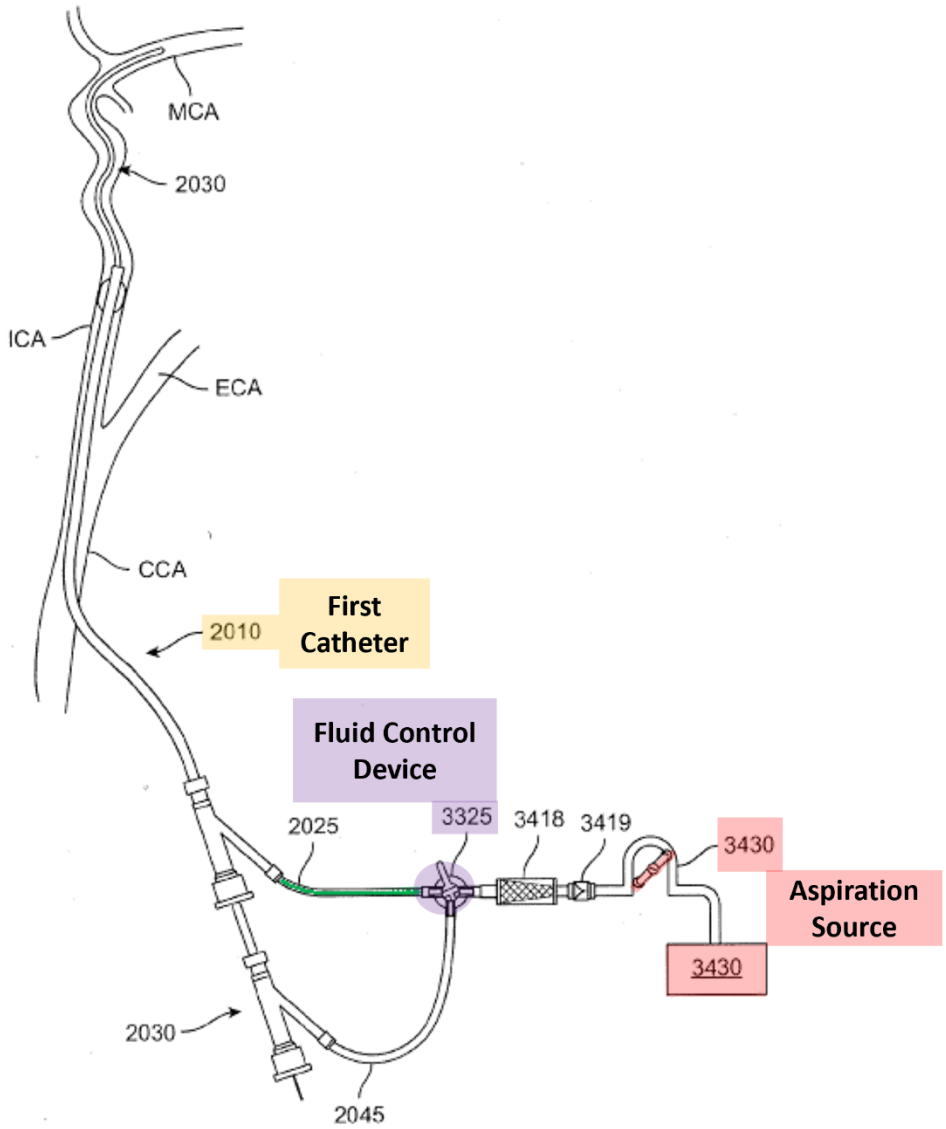

FIG. 34

(Ex. 29, Fig. 34). Consequently, movement of the first fluid control device from the first position to the second position causes vacuum pressure to be applied to the first catheter to generate suction at the distal portion of the first catheter.

f. <u>A Second Clot Aspiration Assembly</u>

128. Claim 1 next recites: "a second clot aspiration assembly, including: a second catheter advanceable through the first catheter, wherein the second catheter has a distal portion, wherein the second catheter has a size of 16 French or greater, and wherein the second catheter is shaped to be intravascularly advanced through the vasculature of the patient such that the

distal portion of the second catheter is positioned proximate to the pulmonary embolism." Garrison in combination with Laub renders this limitation obvious. Garrison's aspiration system includes a second clot assembly including a second aspiration catheter [orange] configured for placement into fluid communication with a second aspiration source [red] by way of a flow line (i.e. aspiration tube) [green]:

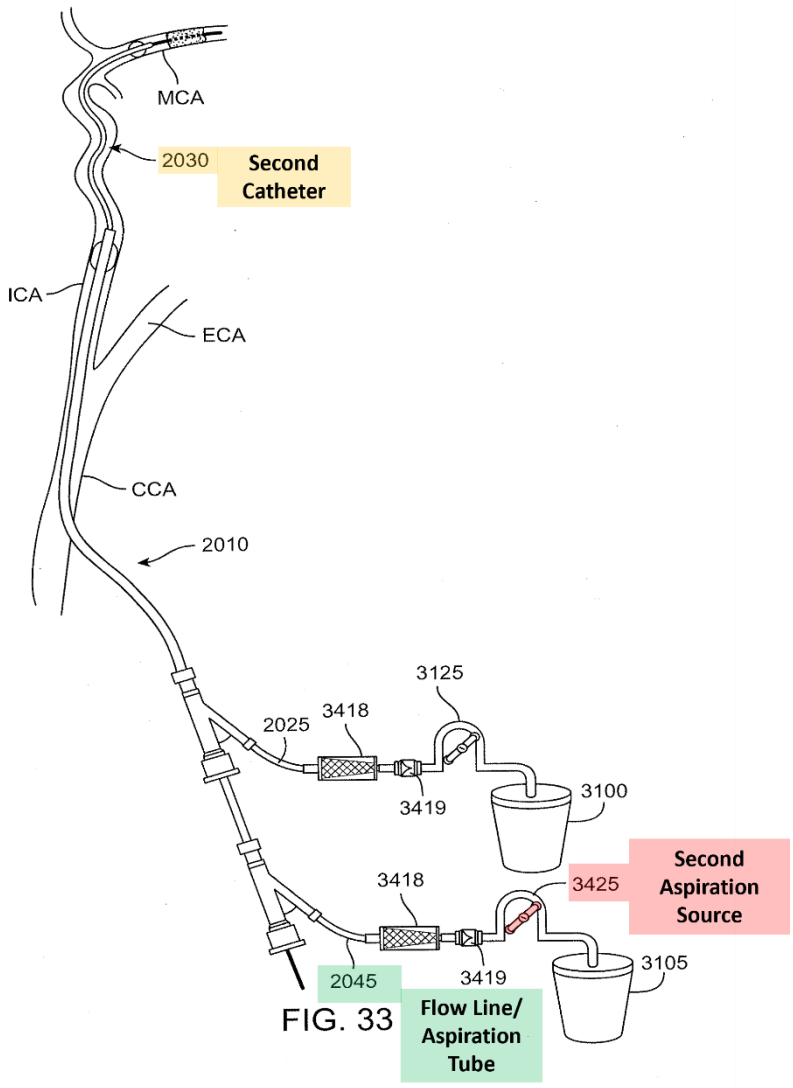

FIG. 33

(Ex. 29, [0131], Fig. 33). As shown above, the second catheter 2030 is advanceable through the first catheter 2010. The Examiner was incorrect to conclude during prosecution that Garrison did not disclose a second catheter advanceable through a first catheter. I notice the Examiner refers to the wrong item numbers in the office action. The Examiner stated:

> However, Garrison fails to teach a second catehter advanceable through the first catheter. The second catheter (2045) does not advances through the first catheter (2025), as shown in Figure 33. There is no reason to advance the second catheter through the first catheter of Garrison. Also Garrison does not explicitly disclose the flow lines (2025 and 2045) advancing through arterial access device (2010) because it would interfere with the thrombectomy device.

But items 2025 and 2045 are not catheters. Items 2025 and 2045 are "flow lines." Based on this description, it appears that the Examiner did not appear to fully understand Garrison.

129. Garrison's catheter 2030 may also "provide distal access for additional devices, localized fluid or contrast delivery, or localized aspiration at a location distal of the distal-most end of the arterial access device 2010." (Ex. 29, [0054]). Garrison expressly discloses that a "second, smaller diameter catheter may be inserted through the first catheter, and positioned at the distal treatment site." (Ex. 29, [0166]). The physician would insert the second, smaller diameter catheter through the hemostasis valve attached to the first catheter and advance it through the vasculature to position it proximate to the treatment site. (*See also* Ex. 29, [0053] (explaining that the catheter has "a hemostasis valve to allow introduction of devices while preventing or minimizing blood loss during the procedure")). In Figure 2, Garrison shows an aspiration catheter (catheter 2030, orange) with a distal end portion positioned proximate to clot material (thrombus 10, pink) within the blood vessel of the patient:

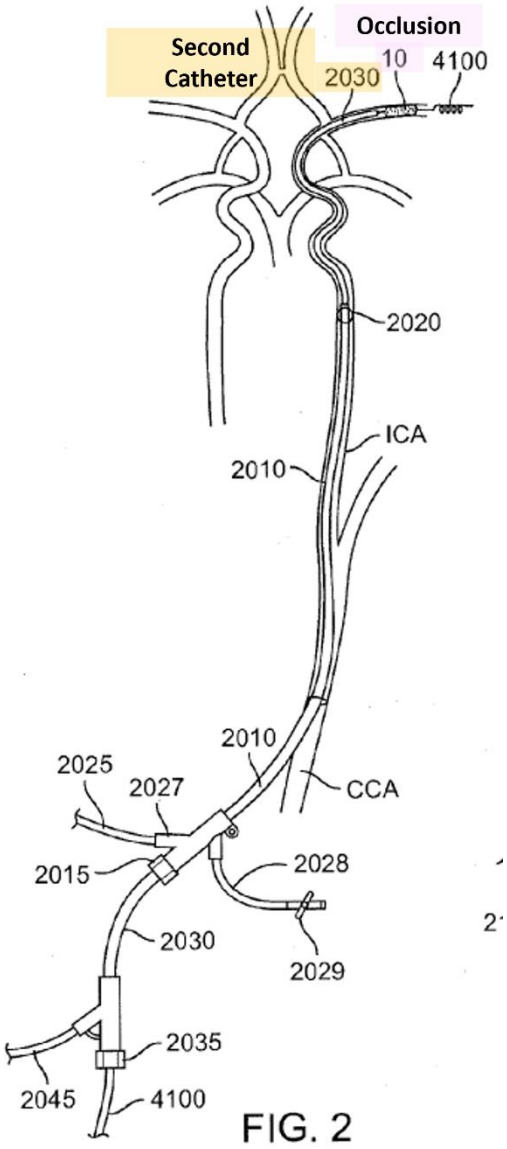

FIG. 2

(Ex. 29, Fig. 2, [0050]-[0051]). Likewise, Garrison discloses variations of the aspiration catheter, such as catheters with an enlarged "distal-most tip or edge," which may be "used to aspirate a clot in an artery." (*Id.*, [0111]). Garrison discloses that "the catheter therefore may provide a larger suction force on the occlusion located near the tip." (*Id.*). Thus, Garrison repeatedly discloses positioning the distal portion of the catheter proximate the clot material.

130. If Garrison's catheters do not meet the claim limitation requiring a second catheter 16F or greater, Laub discloses such catheters. Laub describes an aspiration system "to aspirate thrombi and/or other unwanted material from the patient's vasculature." (Ex. 1021 at [0005]). For example, Laub may be used "to remove clots from patients suffering from or at

risk of pulmonary embolisms." (*Id.*). As shown in Figure 1A below, Laub describes an example of an aspiration system that has an aspiration catheter 200 (e.g., first catheter) [orange], a pump (e.g., aspiration pump) [red], and a control panel [purple] to enable suction:

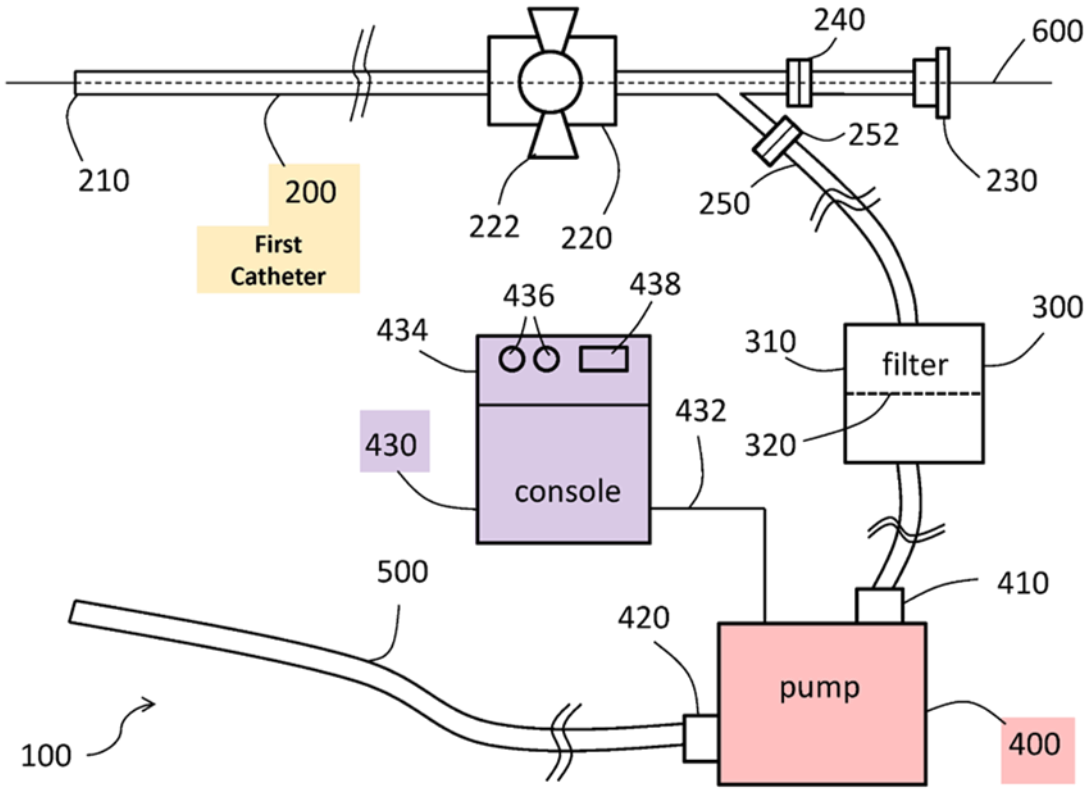

FIG. 1A

Laub discloses that a second aspiration catheter can be advanced through Laub's first aspiration catheter. Laub explains that the aspiration system enables "other devices not shown which may be inserted through aspiration catheter 200 via working port 230". (Ex. 1021, [0035]). These devices "include but are not limited to other wires, balloon catheters, diagnostic catheters, baskets, optical fiber, thrombolysis tools, needles, cutters, biopsy devices, and other surgical implements known in the art." (*Id.*). An aspiration catheter is a "thrombolysis tool" and a "surgical implement known in the art". Thus, a person of ordinary skill in the art would have recognized that a second aspiration catheter could be inserted through Laub's first catheter.

131. As discussed in the Preamble section above, persons of ordinary skill in the art would have recognized that adapting Garrison's system to treat PE would have required, at most, simple modifications, such as increasing the size of the aspiration catheter (and related

components) and potentially adjusting the aspiration force. A person of ordinary skill in the art would have found it obvious to increase the size of Garrison's second catheter to 16F or greater based on Laub. Laub acknowledges that persons of ordinary skill in the art possessed the requisite knowledge to make such adjustments. For example, Laub discloses embodiments where "aspiration catheter 200 has a French size of at least 5 Fr", and an embodiment where "aspiration catheter 200 has a French size of at least 20 Fr". (Ex. 1021, [0028]). In fact, Laub expressly discloses an example where the "aspiration catheter 200 has a French size of at least 16 Fr." (*Id.*). Further, Laub discloses that the aspiration catheter 200 can have "a lumen diameter ***of at least*** 5mm." (*Id.* at [0029] (emphasis added)). Thus, Laub's aspiration catheter of at least 20 Fr. could receive a catheter of 16 Fr. if the lumen diameter were larger than 5 1/3 mm. Laub presumes that persons of ordinary skill in the art possessed the requisite knowledge to make these simple sizing decisions. Similarly, Garrison discloses a range of possible sheath and catheter sizes for its system and presumes that a person of ordinary skill in the art would have possessed the necessary knowledge to select the correct size. (*See, e.g.*, Ex. 29 [0063] (describing 6 and 8 French size sheaths); [0070] (describing 10 French size sheaths)). Consequently, Garrison in combination with Laub renders this limitation obvious.

132. Additionally, for the reasons already explained in the Preamble section, a person of ordinary skill in the art would have found it obvious to position the distal end of Garrison's aspiration system proximate a pulmonary embolism within the blood vessel of the patient based on Laub and the knowledge of a person of ordinary skill in the art.

g. <u>A Second Pressure Source</u>

133. Claim 1 next recites: "a second pressure source." Garrison discloses this limitation. Garrison describes an embodiment in which the clot treatment system includes a second aspiration source 3425 [red]:

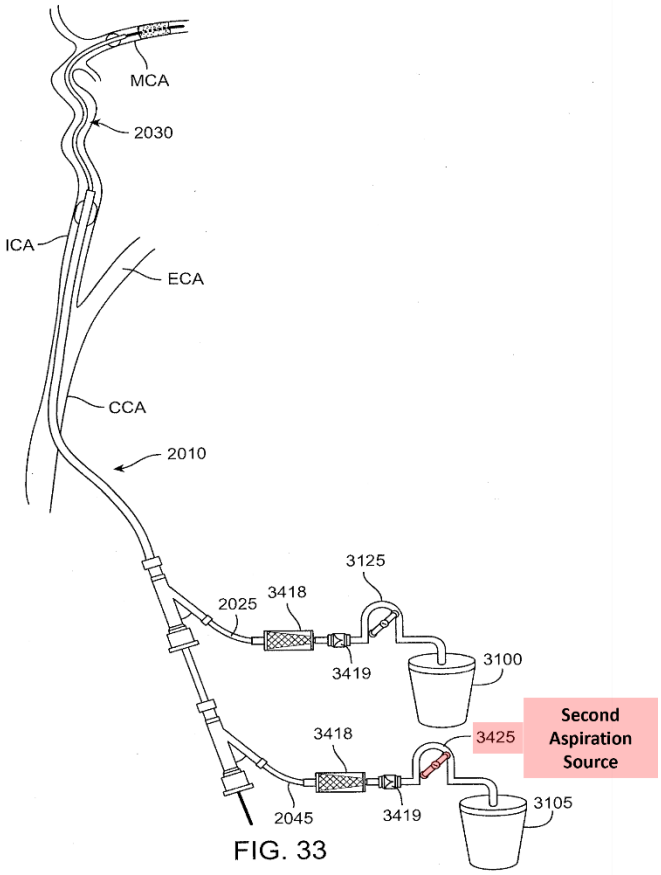

FIG. 33

(Ex. 29, [0131], Fig. 33). Garrison states, "the flow line 2045 of the catheter 2030 is additionally or alternately connected to a separate aspiration source 3425 and delivery location, such as receptable 3105." (*Id.*, [0131]). Garrison further explains that "the aspiration source 3425 and delivery location may be combined into a single device such as a syringe." (*Id.*).

h. <u>A Second Fluid Control Device</u>

134. Claim 1 next recites: "a second fluid control device between the second catheter and the second pressure source, wherein the second fluid control device is movable between (a) a first position in which the second pressure source is fluidly disconnected from the second catheter and (b) a second position in which the second pressure source is fluidly connected to the second catheter." Garrison discloses this limitation. Garrison's aspiration system includes "valve 3325" as shown in Fig. 34 between the first catheter and the first aspiration source. While Figure 34 illustrates a single fluid control device (stopcock valve 3325) between the aspiration source and catheters, Garrison explains that the flow control elements, such as valve

3325, can be used with all the catheters and flow lines. (*See e.g.*, *id.* at [0130] ("Described herein are aspiration and flow control elements configured to be used with an arterial access device, a guide catheter, and/or a catheter of the disclosed system.")). If it were desired to use the two aspiration catheter embodiment, such as shown in Figure 33, a person of ordinary skill in the art reading this disclosure would have found it obvious to add the same valve 3325 (as shown in Figure 34) to the embodiment shown in Fig. 33[4]:

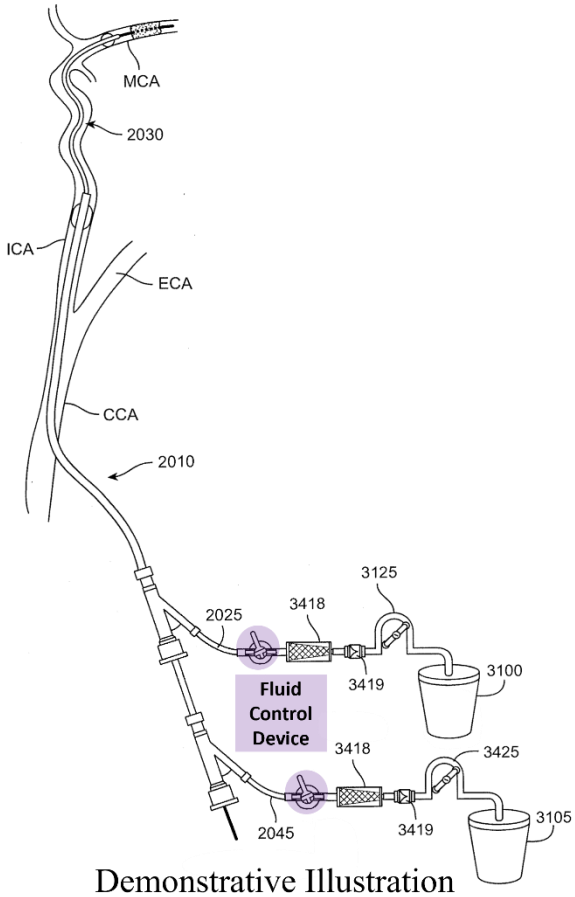

Demonstrative Illustration
Modified FIG. 33

(Ex. 29, Fig. 33 (Modified to include the "fluid control device" colored purple to each flow line)). In August 2018, a person of ordinary skill in the art would have found it obvious to couple a fluid control device to the tubing and other components using conventional connectors, such as Luer-type connectors (e.g., Luer slip and Luer lock) and barb connectors. (*See also* Ex.

[4] This image reflects a demonstrative prepared by Imperative Care. All modifications to the figure have been made by Imperative Care.

29, [0062], [0065], Fig. 11 (illustrating stopcock with standard female connector); Ex. 1, 7:61 (describing a "standard luer connector"), 33:24 (describing a "standard Luer or large bore connector")). In fact, Garrison incorporates by reference patents and publications that describe attaching catheter components using "a conventional luer fitting" or improvements to such fittings. (Ex. 1036, [0130]; *see also* Ex. 1038, 8:45, 8:63 (describing an "auxiliary Luer port"); Ex. 1037, [0056]-[0059] (describing improvements to the "standardized … locking Luer taper design")).

135. Garrison also discloses that the second aspiration source and receptacle 3105 could be combined into a single device such a syringe. (Ex. 29, [0131]). As explained above, the syringe could be a locking syringe such as a VacLock syringe, or another type of negative pressure source with fluid control capabilities. (*Id.*). Garrison thus discloses moving a fluid control device to fluidly disconnect a valve between the second catheter and second aspiration source, then moving the fluid control device to a second position to fluidly connect the second catheter and second aspiration source.

i. <u>The Second Pressure Source Is Configured to Generate Vacuum Pressure</u>

136. Claim 1 next recites: "wherein the second pressure source is configured to generate vacuum pressure while the second fluid control device is in the first position." Garrison discloses this limitation. As explained above, Garrison includes multiple disclosures of closing a valve to generate negative pressure. A person of ordinary skill in the art would understand that by applying the disclosure of the fluid control device from the embodiment in Fig. 34 to the embodiment of Fig. 33, the second aspiration source could be configured to generate vacuum pressure while the second fluid control device is in the first position as previously explained:

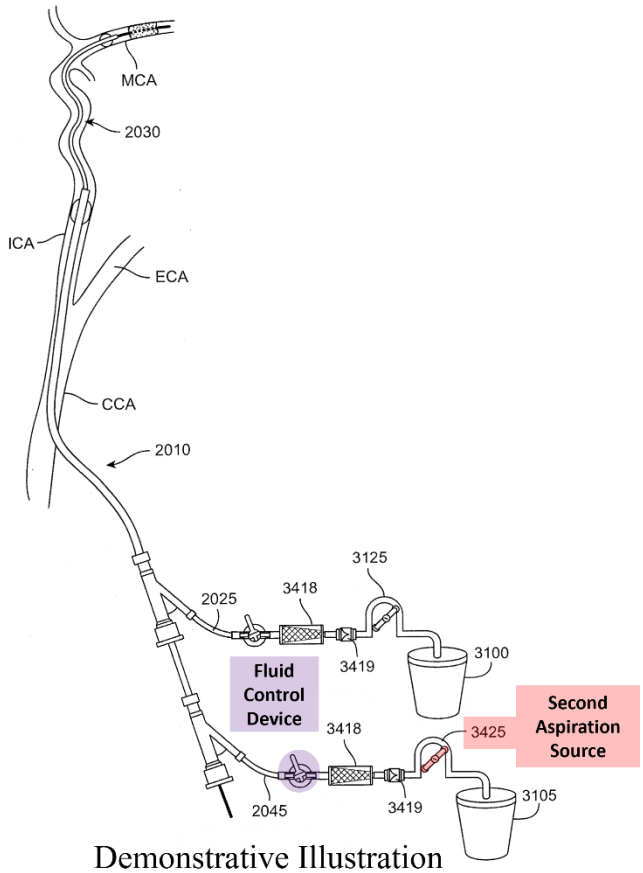

Demonstrative Illustration
Modified FIG. 33

(*Supra* §IV. E.1.d; Ex. 29, Fig. 33 (Modified)).

j. <u>The Vacuum Pressure Is Applied</u>

137. Claim 1 next recites: "wherein, upon movement of the second fluid control device from the first position to the second position, the vacuum pressure is applied to the second catheter to generate suction at the distal portion of the second catheter to aspirate blood and at least a portion of the pulmonary embolism into the second catheter." Garrison discloses this limitation. As explained above, Garrison discloses a fluid control device actuatable from a first position to a second position, where upon the vacuum pressure is applied to the catheter. A person of ordinary skill in the art would have understood that by applying the disclosure of the fluid control device from the embodiment in Fig. 34 to the embodiment of Fig. 33, vacuum pressure could be applied to the second catheter to generate suction at the distal portion of the second catheter as previously explained:

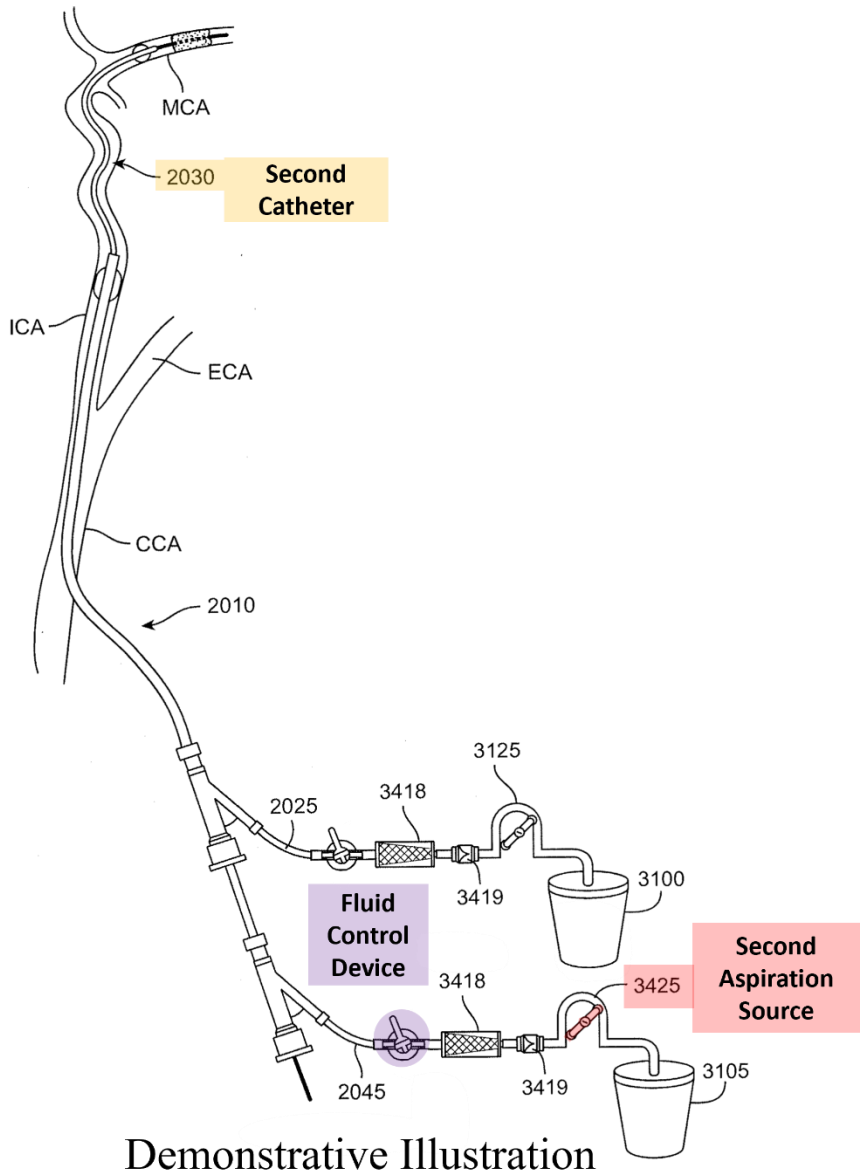

Demonstrative Illustration
Modified FIG. 33

(*Supra* § IV. E.1.e; Ex. 29, Fig. 33 (Modified)).

138. As discussed above, Garrison's aspiration catheter includes a distal end portion configured to be positioned proximate to clot material, such as pulmonary embolisms.

V. SECONDARY CONSIDERATIONS

139. I am not aware of any secondary considerations of nonobviousness relating to Claims 1 and 10 of the '921 patent or Claim 1 of the '910 patent. I see that Inari's expert, Brian Brown, opines there was "a long-felt need in the industry, namely efficient and safe aspiration percutaneous mechanical thrombectomy devices with large catheters for peripheral and

pulmonary vasculature enabling improved patient outcomes and improved mortality rates." Brown Dec., ¶205. However, I notice that Mr. Brown does not identify any evidence supporting that opinion. Moreover, that general long-felt need is not the same as a long-felt need for the device claimed in the '910 patent. The '910 patent is limited to a specific device requiring two clot aspiration assemblies with two pressure sources. Mr. Brown does not identify any long-felt need for that device. Likewise, I do not see that Mr. Brown or Inari identify any long-felt need (or other secondary considerations) for the devices of claims 1 and 10 of the '921 patent. Again, those claims of the '921 patent require a very specific valve and there is no evidence that there was a long-felt need for a valve having actuators and a filament.

140. Further, because the devices claimed in the '921 patent and '910 patent are not new, and were invented long before September 2017 and August 2018, respectively, I am not aware of any long-felt need in the industry, unexpected results, skepticism of the invention, or teaching away from the invention. I am also not aware of any praise for the alleged inventions or copying of the alleged inventions by other companies.

VI. CONCLUSION

141. For the foregoing reasons, it is my opinion that Claims 1 and 10 of the '921 patent and Claim 1 of the '910 patent are invalid because they would have been anticipated by or obvious in view of the prior art discussed above and the knowledge of one of ordinary skill in the art at the time of the alleged inventions.

I declare under penalty of perjury, under the laws of the United States of America, that the foregoing statements are true and correct.

Executed on September 9, 2024 in Glen Ellen, CA.

troy thornton

Troy Thornton