REDACTED VERSION OF DOCUMENT SOUGHT TO BE SEALED

Ramsey M. Al-Salam, Bar No. 109506
RAlSalam@perkinscoie.com
PERKINS COIE LLP
1201 Third Avenue, Suite 4900
Seattle, Washington 98101-3099
Telephone: +1.206.359.8000
Facsimile: +1.206.359.9000

Amanda Tessar, Bar No. 33173 (admitted *pro hac vice*)
ATessar@perkinscoie.com
PERKINS COIE LLP
1900 Sixteenth Street, Suite 1400
Denver, Colorado 80202-5255
Telephone: +1.303.291.2357
Facsimile: +1.303.291.2457

(Additional counsel listed on signature page)

ATTORNEYS FOR PLAINTIFF
INARI MEDICAL, INC.

UNITED STATES DISTRICT COURT
NORTHERN DISTRICT OF CALIFORNIA
OAKLAND DIVISION

INARI MEDICAL, INC., Plaintiff, v. IMPERATIVE CARE, INC. , Defendant.	Case No. 5:24-cv-03117-EKL-SVK INARI'S REPLY IN SUPPORT OF MOTION FOR PRELIMINARY INJUNCTION Hearing Date: December __, 2024 [TBD] Time: TBD Location: Courtroom 7, 4th Floor, San Jose Judge: Eumi K. Lee

INARI-2021
Imperative Care, Inc. v. Inari Medical, Inc., IPR2025-01025

REDACTED VERSION OF DOCUMENT SOUGHT TO BE SEALED

TABLE OF CONTENTS

Page

INTRODUCTION 1

I. TRUVIC PRESENTS THE WRONG WITNESSES 2

II. TRUVIC'S ARGUMENTS ARE INCONSISTENT WITH BASIC PATENT LAW PRINCIPLES 3

III. TRUVIC HAS FAILED TO DEFEAT INARI'S SHOWING OF LIKELIHOOD OF SUCCESS 6

A. Inari Is An Innovator In Mechanical Thrombectomy Devices For VTE 6

B. The '910 Patent Is Valid And Infringed 7

C. The '921 Patent Is Valid And Infringed 10

D. Secondary Considerations Of Nonobviousness Support An Injunction Here 13

IV. TRUVIC HAS FAILED TO DEFEAT INARI'S SHOWING OF IRREPARABLE HARM 14

V. TRUVIC HAS FAILED TO DEFEAT INARI'S SHOWING ON BALANCE OF HARDSHIPS 17

VI. TRUVIC HAS FAILED TO DEFEAT INARI'S SHOWING ON PUBLIC INTEREST 18

VII. TRUVIC'S ARGUMENTS ABOUT DELAY IGNORE THE HARM THAT INARI IS TRYING TO PREVENT 19

CONCLUSION 20

REDACTED VERSION OF DOCUMENT SOUGHT TO BE SEALED

TABLE OF AUTHORITIES

CASES

Alacritech, Inc. v. Microsoft Corp.,
No. 04-03284, 2005 WL 850729 (N.D. Cal. Apr. 12, 2005) 4, 19

Apple Inc. v. Samsung Elecs. Co.,
735 F.3d 1352 (Fed. Cir. 2013) 15

Apple Inc. v. Samsung Elecs. Co.,
809 F.3d 633 (Fed. Cir. 2015) 15, 16

Apple, Inc. v. Samsung Elecs. Co.,
678 F.3d 1314 (Fed. Cir. 2012) 20

AstraZeneca LP v. Apotex, Inc.,
633 F.3d 1042 (Fed. Cir. 2010) 4

Carman Indus., Inc. v. Wahl,
724 F.2d 932 (Fed. Cir. 1983) 6

In re Cyclobenzaprine Hydrochloride Extended-Release Capsule Pat. Litig.,
676 F. 35 1063, 1075 (Fed. Cir. 2012) 13

In re Depomed Pat. Litig.,
No. 13-cv-4507, 2016 WL 7163647 (D.N.J. Sept. 30, 2016) 4

Edwards Lifesciences AG v. CoreValve, Inc.,
No. 08-cv-91, 2014 WL 1493187 (D. Del. Apr. 15, 2014) 4

Elantech Devices Corp. v. Synaptics, Inc.,
No. 06-cv-1839, 2008 WL 1734748 (N.D. Cal. April 14, 2008) 5, 19

Eli Lilly & Co. v. Teva Pharms. Int'l GmbH,
8 F.4th 1331 (Fed. Cir. 2021) 3

Golden Gate Restaurant Ass'n v. City and Cnty. of SF,
512 F.3d 1112 (9th Cir. 2008) 5

Inari Med., Inc. v. Inquis Med., Inc.,
No. 1:24-cv-1023 (D. Del., filed Sept. 11, 2024) 5

Kinetic Concepts, Inc. v. Smith & Nephew, Inc.,
688 F.3d 1342 (Fed. Cir. 2012) 13

KSR Int'l Co. v. Teleflex Inc.,
550 U.S. 398 (2007) 7, 9

Littelfuse, Inc. v. Mersen USA EP Corp.,
29 F.4th 1376 (Fed. Cir. 2022) 8

LLC v. AgiLight, Inc.,
750 F.3d 1304 (Fed. Cir. 2014) 8

REDACTED VERSION OF DOCUMENT SOUGHT TO BE SEALED

Medtronic, Inc. v. Teleflex Innovs. S.à.r.l.,
69 F.4th 1341 (Fed. Cir. 2023) 12

Metalcraft of Mayville, Inc. v. The Toro Co.,
848 F.3d 1358 (Fed. Cir. 2017) 5

Oxford Immunotec Ltd. v. Qiagen, Inc.,
271 F. Supp. 3d 358 (D. Mass. 2017) 4

Pfizer, Inc. v. Teva Pharms. USA, Inc.,
429 F.3d 1364 (Fed. Cir. 2005) 5

Plas-Pak Indus., Inc. v. Sulzer Mixpac AG,
600 F. App'x 755 (Fed. Cir. 2015) 9

Robert Bosch LLC v. Pylon Mfg. Corp.,
659 F.3d 1142 (Fed. Cir. 2011) 15

Sanofi-Synthelabo v. Apotex, Inc.,
470 F.3d 1368 (Fed. Cir. 2006) 19

*Securus Techs, Inc. v. Glob. Tel*Link Corp.*,
701 F. App'x 971 (Fed. Cir. 2017) 9

Stiftung v. Renishaw PLC,
945 F.2d 1173 (Fed. Cir. 1991) 6

Takeda Pharms. USA, Inc. v. West-Ward Pharm. Corp.,
No. 14-cv-1268, 2014 WL 5088690 (D. Del. Oct. 9, 2014) 4

Temco Elec. Motor Co. v. Apco Mfg. Co.,
275 U.S. 319 (1928) 6

Trivascular, Inc. v. Samuels,
812 F.3d 1056 (Fed. Cir. 2016) 12

Unicorn Energy AG v. Tesla Inc.,
No. 21-cv-7476, 2024 WL 3463356 (N.D. Cal. July 17, 2024) 9

United States v. SF Green Clean, LLC,
No. 14-cv-1905, 2014 WL 4311183 (N.D. Cal. Aug. 29, 2014) 5

STATUTES

35 U.S.C. §271 ..... 1, 3, 6

35 U.S.C. §282 10

REDACTED VERSION OF DOCUMENT SOUGHT TO BE SEALED

CITED DEPOSITION TRANSCRIPTS: EXHIBIT CROSS-REFERENCE LIST

Deposition Transcript*	Exhibit #
Brian Brown	Exhibit 1019 to Re Declaration (Dkt. 36-13)
Benjamin Merritt	Exhibit 1026 to Re Declaration (Dkt. 36-13)
Lance Scott	Exhibit 41 to Tessar Declaration
Aquilla Turk	Exhibit 42 to Tessar Declaration
Dana Tomalty	Exhibit 43 to Tessar Declaration
Troy Thornton	Exhibit 44 to Tessar Declaration
Phil Nalbone	Exhibit 45 to Tessar Declaration

* For the Court's convenience and to minimize exhibit volume, Inari cites to transcripts already submitted by Truvic when possible. When attaching new transcripts for Truvic witnesses, Inari has excerpted only the relevant portions to minimize the volume of its submission, highlighting the cited testimony in green to make it easy for the Court to locate the cited portions of the testimony (except where Court rules require that confidential/sealed information be separately highlighted in yellow).

REDACTED VERSION OF DOCUMENT SOUGHT TO BE SEALED

Truvic's opposition misses the point. Inari seeks a preliminary injunction to prevent ***future*** irreparable harm once Truvic has: (a) obtained FDA clearance to market Symphony for treatment of PE; and (b) ramped up sales for treatment of DVT. Instead of addressing this irreparable harm, Truvic focuses on the fact that—although Symphony is indisputably designed for treatment of both PE and DVT—it has not yet received FDA clearance to market it for PE and has had only limited sales of its system so far (i.e., [redacted] cases total). But this motion does not seek relief for past infringement; it seeks to prevent harm that will occur from infringement going forward in 2025 and beyond. Truvic's muddling of the timeline is just wrong.

Truvic does not contest infringement for the '921 Patent, and it makes only a half-hearted effort to do so for the '910 Patent. Truvic even ***admits*** that its product is based on (i.e., copied) Inari's, supposedly to "improve" on Inari's design. Opp. at 6. But even if Symphony had some improved feature (which Inari denies), that does not avoid or justify infringement. Changes in the appearance of the device, or addition of an electric pump, likewise do not avoid infringement: it is illegal for Truvic to take Inari's patented inventions without permission. 35 U.S.C. §271. This is likely why Truvic offers ***no*** expert opinion as to noninfringement for either patent.

In lieu of seriously contesting infringement, Truvic focuses on invalidity arguments. But the Patent Office already considered many of the references Truvic cites—and found that Inari's inventions are innovative and deserving of patent protection. Truvic says that the Patent Office made "serious mistake[s]," was "misinformed," and—without a shred of evidence—that Inari's Chief Medical Officer (a respected clinician) "misled" an Examiner. Opp. at 8, 16. There is no support for these farfetched accusations, and Truvic cites none. Moreover, Truvic's own expert makes damning admissions that undercut Truvic's invalidity arguments, as discussed below.

Inari asks this Court to cut through Truvic's excuses. The fact that Penumbra and others compete is no excuse for Truvic's attempt to illegally steal market share through copying and infringement. Likewise, Truvic's infringement is not the "status quo" that must linger unchanged. That Truvic says that it has not ***yet*** inflicted its irreparable harm on Inari is also no excuse—particularly when Truvic's declarants were forced to admit that they expect to divert [redacted] to Truvic starting in 2025. This Court should grant the injunction.

REDACTED VERSION OF DOCUMENT SOUGHT TO BE SEALED

I. TRUVIC PRESENTS THE WRONG WITNESSES

Truvic supports its motion with many declarations. But not a single one is from an engineer or employee who participated in Symphony's design process. Not a single one of the declarants knows anything about: the extent to which Truvic copied Inari's products; Truvic's targeted recruiting of Inari's sales representatives (with their knowledge of Inari's confidential information, strategy, products, market, and customers), which continued even ***after*** Inari filed its motion;[1] or Truvic's strategy of stealing Inari's customers, rather than converting new doctors to mechanical thrombectomy to help treat more patients and grow the pie. Indeed, neither Truvic nor its declarants has identified a single Truvic doctor-customer who was not already Inari's before beginning to buy Symphony systems. Truvic's witnesses instead consist of the following:

- A marketing employee responsible for multiple Imperative Care product lines (i.e., not specific to Symphony), who provides cherry-picked technical detail about Symphony in his declaration but knew nothing of the design process, had only observed [redacted], does not manage or supervise Symphony salespeople, and is not involved with recruiting such employees. Scott Tr. at 20:17-21:1, 23:7-23, 37:4-38:18, 42:24-44:11, 47:17-49:9, 91:22-92:20, 94:12-19, 165:24-168:18, 177:5-15.
- Truvic's Chief Medical Officer, who spent approximately an hour total on his declaration but provides sweeping opinions that it would have been obvious to upsize existing thrombectomy systems for small arteries—even though he does not practice in the area of PE or DVT, could not identify any unique challenges presented by PE or DVT procedures, had no involvement in the [redacted] or [redacted] for Symphony, has a [redacted] in Imperative Care, and has ***never*** performed a single aspiration thrombectomy procedure for PE or DVT. Turk Tr. at 14:8-17:10, 24:4-17, 25:16-26:10, 27:15-28:24, 33:7-21, 39:8-40:4, 42:18-43:7, 56:23-25, 58:23-59:8, 62:21-63:12, 86:4-14, 90:12-17, 155:2-158:1, 161:1-21.
- An investor relations employee whose declaration focuses on undisputed facts, such as that there is another competitor in the market (Penumbra) and that Truvic invested resources in its infringing Symphony product, but who confessed at his deposition to more telling details, including that Truvic forecasts Symphony sales of at least [redacted] in the next [redacted] and that an injunction would deprive Imperative Care of less than [redacted] of its annual revenues, [redacted]. Nalbone Tr. at 72:17-73:12; 28:16-19.
- A first-time technical expert who has never observed (much less performed) a DVT or PE thrombectomy procedure, never designed any component of any thrombectomy system, and spent less than 50 hours to prepare his 300+ pages of district court and IPR declarations, review dozens of prior art references, and prepare for his deposition.

[1] Since Inari filed its motion, Truvic recruited yet another Inari salesperson (Gaston Rivera) to join Truvic. Immediately before leaving Inari, Mr. Rivera improperly downloaded and viewed dozens of confidential Inari files. Inari does not know if he did so at Truvic's behest.

Thornton Tr. at 16:11-21:17, 30:21-31:2, 35:19-36:23, 45:14-46:4, 216:20-217:11

- A doctor who supports Truvic's public interest arguments, who is admittedly an atypical user of VTE thrombectomy devices and provided his opinions without knowledge of Truvic's marketing strategies, copying, or patent policy considerations. But even he admitted that—if Truvic's product were unavailable—he would use Inari's. Tomalty Tr. at 15:12-16:21, 17:5-23, 21:13-22:9, 48:22-52:10, 118:23-124:18.

II. TRUVIC'S ARGUMENTS ARE INCONSISTENT WITH BASIC PATENT LAW PRINCIPLES

Truvic mixes up types of patent claims and timelines: Truvic's scattershot opposition is replete with irreconcilable positions and legal errors. For instance, Truvic incorrectly suggests that Inari is not entitled to relief because Truvic is supposedly not ***currently*** infringing the '910 Patent while simultaneously arguing that it should not be enjoined from selling Symphony because that would upset the "status quo." Opp. at 1, 9-11. This is wrong as a matter of law.

First, setting aside that Truvic does not dispute infringement for the '921 Patent and that an injunction could be granted based on that patent alone,[2] Truvic's legal arguments as to why it is supposedly not currently infringing the '910 Patent (because it is not yet cleared to market Symphony for treatment of PE and Inari has allegedly not proved that doctors are using it for PE off-label) are wrong as a matter of law. The '910 claims at issue here are ***system*** claims, not method claims.[3] This means that Inari need not prove that doctors are actually ***using*** the system to perform PE procedures (i.e., performing the steps of a method claim) to show a likelihood of success on infringement, as Truvic suggests (Opp. at 1, 10, 11). Instead, Inari need only prove—and has proven—that Truvic is ***making, selling, or offering to sell*** a ***system*** that meets all limitations of the claim (e.g., it includes the requisite telescoping catheters, pressure sources, etc., for treating PE). *E.g*, *Eli Lilly & Co. v. Teva Pharms. Int'l GmbH*, 8 F.4th 1331, 1340 (Fed.

---

[2] The '921 Patent covers custom-designed hemostasis valves that, relevantly here, are used for both DVT or PE thrombectomy procedures. *See* Ex. 2 at Claim 10.

[3] A method claim covers a series of steps for achieving a particular result. A system claim covers a combination of components. To infringe a method claim, one must perform all steps of the method. To infringe a system claim, one must make, use, sell, or offer to sell a system containing the required components. Chisum on Patents, §16.02. Truvic distorts these basic principles when it argues, for instance, that it is Symphony "procedures" that infringe. Opp. at, *e.g.*, 14. To be clear, Inari's allegations for the system claims here are based on the Symphony system having all elements of the asserted claims and being made, sold, or offered for sale (i.e., the activities prohibited by 35 U.S.C. §271(a)) by Truvic. A doctor's ***use*** of Symphony for a PE procedure could be a separate infringement, but that is not the focus here.

Cir. 2021) ("Apparatus claims cover what a device ***is***, not what a device ***does***.").[4] Thus, Truvic infringes the '910 Patent through its sales of an infringing system, regardless of whether or not doctors perform procedures with it (or which procedures they perform).[5]

Second, Truvic does not and cannot deny that its Symphony system was designed to treat PE and that Truvic intends to market it for that disease as soon as it receives FDA clearance to do so.[6] Truvic is currently conducting clinical trials precisely so that it can do so. And the law ***allows*** one to get a preliminary injunction to prevent a product launch or future infringement; there is no requirement that Inari prove past infringement here. *E.g., AstraZeneca LP v. Apotex, Inc.*, 633 F.3d 1042 (Fed. Cir. 2010) (affirming preliminary injunction based on planned product launch); *Alacritech, Inc. v. Microsoft Corp.*, No. 04-03284, 2005 WL 850729 (N.D. Cal. Apr. 12, 2005) (granting preliminary injunction before product release); *In re Depomed Pat. Litig.*, No. 13-cv-4507, 2016 WL 7163647 (D.N.J. Sept. 30, 2016) ("[I]f Defendants enter the market by launching their [] products, it would threaten Depomed's business and cause extreme hardship."); *Edwards Lifesciences AG v. CoreValve, Inc.*, No. 08-cv-91, 2014 WL 1493187 (D. Del. Apr. 15, 2014) (similar); *Takeda Pharms. USA, Inc. v. West-Ward Pharm. Corp.*, No. 14-cv-1268, 2014 WL 5088690 (D. Del. Oct. 9, 2014) (similar); *Oxford Immunotec Ltd. v. Qiagen, Inc.*, 271 F. Supp. 3d 358 (D. Mass. 2017) (waiting for FDA approval/launch would be too late).

Third, there is no "heightened" requirement of proof here because Inari seeks to disrupt the "status quo" and obtain a "mandatory injunction," terms that Truvic invokes as if they have fixed meaning. The Ninth Circuit has unequivocally rejected that kind of thinking:

---

[4] All quotations and internal citations omitted throughout, and all emphases are added.

[5] As to off-label usage, a Truvic witness testified that his counsel had advised him that only on-label (DVT) cases were relevant to his testimony, Scott Tr. at 16:22-17:13, which presumably led to incomplete investigation. Truvic thus prevented Inari from collecting evidence on this point (which is irrelevant to the system '910 Claim 1, since Truvic infringes when it sells Symphony, *see supra*, n.3), but then tries to use the lack of evidence in its favor anyway.

[6] Telescoping catheters are used for most PE procedures, but rarely for DVT procedures. Brown Decl. ¶¶73-74, 121-122, 233; Scott Tr. at 16:22-21:1 (did not investigate [redacted] but admitted telescoping is more important for PE), 182:19-183:12; Mot. at 7. Symphony indisputably has telescoping catheters that are sold with it (Ex. 7; Ex. 8 at 2, 7)—and it is those ***sales*** of a system with telescoping catheters that infringe. In other words, Truvic's claim that doctors telescope with Symphony for DVT procedures only [redacted] of the time (Opp. at 14), and its corresponding "noninfringement" argument, again miss the point.

> It must not be thought ... that there is any particular magic in the phrase 'status quo.' The purpose of a preliminary injunction is always to prevent irreparable injury so as to preserve the court's ability to render a meaningful decision on the merits. It often happens that this purpose is furthered by preservation of the status quo, but not always.... The focus always must be on prevention of injury by a proper order, not merely on preservation of the status quo.

Golden Gate Restaurant Ass'n v. City and Cnty. of SF, 512 F.3d 1112, 1116 (9th Cir. 2008); *see also United States v. SF Green Clean, LLC*, No. 14-cv-1905, 2014 WL 4311183, at *2 (N.D. Cal. Aug. 29, 2014). Likely for this reason, the concept of "mandatory injunctions" is almost never mentioned in the dozens of preliminary injunction decisions in this District in patent cases. Moreover, the injunction that Inari seeks is clearly a ***prohibitory*** one: Inari asks the Court to enjoin (i.e., prohibit) Truvic from making, using, selling, or offering to sell its Symphony system in the United States due to its infringement of the '910 and/or '921 Patents. The status quo here is that Truvic has barely launched its product for DVT, with it having been used in [redacted] procedures this past year (Scott Tr. at 23:24-24:17), and with it not having yet launched for PE.[7]

Truvic makes many other errors of basic patent law: Truvic's opposition is riddled with other legal errors, too. For instance, Truvic cannot escape the legal consequences of its infringement even if Inari has not (yet) also sued every other infringer on the market.[8] *Pfizer, Inc. v. Teva Pharms. USA, Inc.*, 429 F.3d 1364, 1381 (Fed. Cir. 2005) ("A patentee does not have to sue all infringers at once. Picking off one infringer at a time is not inconsistent with being irreparably harmed."). It is likewise false that injunctions are available only in a two-supplier market. *Metalcraft of Mayville, Inc. v. The Toro Co.*, 848 F.3d 1358, 1368 (Fed. Cir. 2017) ("The fact that other infringers may be in the marketplace does not negate irreparable harm.").

Similarly, Truvic's focus on Penumbra is irrelevant. This case is about ***Truvic's*** infringement. The question is not what percentage of the market that Inari (or Penumbra) controls, but instead is whether Truvic's infringement will cause irreparable harm to Inari. *Id.*; *see also Elantech Devices Corp. v. Synaptics, Inc.*, No. 06-cv-1839, 2008 WL 1734748, at *10

---

[7] Truvic witnesses confirm—as is apparent from product documentation—that the exact same Symphony system is used for DVT and PE treatment. *E.g.*, Scott Tr. at 31:14-32:9; Exs. 7-8.

[8] Inari did recently sue another infringer, however. *Inari Med., Inc. v. Inquis Med., Inc.*, No. 1:24-cv-1023 (D. Del., filed Sept. 11, 2024) (asserting four patents).

(N.D. Cal. April 14, 2008) (finding irreparable harm because plaintiff's "lost market share may be difficult to calculate and compensate with money damages").

Finally, while Inari hotly disputes Truvic's assertion that Symphony improves on Inari's innovations and inventions (Opp. at, *e.g.*, 2) or that it matters that Symphony's plastic cover makes it "look" different than Inari's devices (Opp. at 24-27), the resolution of these factual questions is irrelevant to whether Truvic infringes and to the harm caused by Truvic's infringement of Inari's utility patents here. The statute that bars patent infringement, 35 U.S.C. § 271(a), contains no exception for "we stole your invention, but did it better," "we stole your invention, but changed the look of it," or "we copied some of your inventions and infringe your patents, but we also added other features." *Temco Elec. Motor Co. v. Apco Mfg. Co.*, 275 U.S. 319, 328 (1928) ("It is well established that ***an improver*** cannot appropriate the basic patent of another, and that ***the improver*** without a license is an infringer, and may be sued as such."); *see also Stiftung v. Renishaw PLC*, 945 F.2d 1173, 1178 (Fed. Cir. 1991) ("[O]ne cannot avoid infringement merely by adding elements if each element recited in the claims is found in the accused device."); *Carman Indus., Inc. v. Wahl*, 724 F.2d 932, 939 n.13 (Fed. Cir. 1983) ("Utility patents afford protection for the mechanical structure and function of an invention ….").

III. TRUVIC HAS FAILED TO DEFEAT INARI'S SHOWING OF LIKELIHOOD OF SUCCESS

A. Inari Is An Innovator In Mechanical Thrombectomy Devices For VTE

Truvic and its experts do not seriously dispute that Inari created the first-ever custom-built mechanical thrombectomy devices for the treatment of PE and DVT. *E.g.,* Scott Tr. at 54:2-23, 102:3-15, 107:1-18 (admitting that Inari was [redacted]).[9] Indeed, Truvic's "obviousness" arguments reduce to testimony of "experts" who have never designed aspiration thrombectomy devices or performed PE thrombectomies[10] but who proclaim

[9] Even Truvic admits that Penumbra was not approved for PE until 2019 (Opp. at 7), and Penumbra did not add a 16F catheter until its Lightning Flash system in 2022 (Brown Dec. ¶206; https://www.prnewswire.com/news-releases/penumbra-launches-latest-innovation-in-mechanical-thrombectomy-lightning-flash-301717232.html; https://www.accessdata.fda.gov/cdrh_docs/pdf22/K222358.pdf). There is good reason that Truvic does not rely on any Penumbra system as a prior art reference.

[10] Turk Tr. at 24:4-17, 27:15-28:24, 29:3-11, 33:7-21, 39:8-40:4, 42:18-43:7, 56:23-25, 58:6-59:8, 71:6-20, 90:12-17; Thornton Tr. at 30:21-31:2, 35:19-36:23, 216:20-217:11. At least Truvic's marketing witness admitted that doctors [redacted] and view

that it would have been obvious to them to do what Inari did, even if they cannot identify a single other relevant device that came even close to beating Inari to market. Truvic also does not dispute that Inari has been awarded (and has asserted here) patents covering many inventions relating to mechanical thrombectomy for DVT and PE. Instead, Truvic argues that Inari must show that the specific patent claims that are at issue in this motion are infringed and valid. Opp. at 1-3. That is ***exactly*** what Inari did in its motion. *See* Mot. at 19-30; Brown Decl. at ¶¶85-230.

In response, Truvic presents ***no*** arguments as to why it does not infringe the '921 Patent and makes only limited (and legally incorrect) arguments for the '910 Patent that its expert does not endorse. Thornton Tr. at 64:1-18 (disclaiming any noninfringement opinions). Truvic instead focuses its merits arguments on the claim that the Examiner made mistakes (or was "misled" or "misinformed") for ***both*** the '921 Patent and '910 Patent—i.e., that these patents should never have issued. Truvic has to reach for multiple references to combine for its invalidity arguments (many that the Patent Office already considered at length) to make its case, however.

Importantly, the Supreme Court demands that, when relying on "Section 103" obviousness combinations (as Truvic does here), an accused infringer ***must*** convince the adjudicator that a person of ordinary skill in the art would have had a ***specific motivation to combine*** the various asserted references. *KSR Int'l Co. v. Teleflex Inc.*, 550 U.S. 398, 418 (2007) (court must "determine whether there was an apparent reason to combine the known elements in the fashion claimed by the patent at issue"). As detailed below, Truvic all but ignores this core requirement. This requirement is not mentioned even once in Truvic's opposition.[11]

B. The '910 Patent Is Valid And Infringed

Infringement: Truvic's only "technical" noninfringement argument for the '910

---

them as [redacted] Scott Tr. at 52:14-53:2, 97:15-98:2, 107:1-18. Truvic's suggestion that it has any right to make a new [redacted] of Inari's product is offensive to Inari.

[11] Confusingly, Truvic also points to the fact that it has filed IPRs on the '011 and the '691 Patents as proof that the '910 and '921 Patents will be found invalid (Opp. at 8), even though Truvic has not so far filed IPRs for the '910 and '921 Patents. Nothing in the '011 and '691 IPRs should have any bearing on this Court's decision here; those are different patents. And, even if Truvic does file IPRs (or similar proceedings) for the '910 and '921 Patents, that would prove only that it prefers to challenge validity in a different forum than this Court.

Patent,[12] unsupported by expert testimony (Thornton Tr. at 64:1-12), is that because Claim 1 of the '910 Patent recites a "first pressure source" and a "second pressure source," these two pressure sources ***must*** be separate and different from one another. Opp. at 11-14. Because the Symphony system typically uses a ***single*** electric pump, Truvic says that it does not infringe.

This ignores what the '910 Patent says. The '910 Patent is clear and unequivocal: "individual pressure sources ***can be the same or different***" and, "[i]n some embodiments, the first and second pressure sources … are ***separate*** sources each configured to generate and store a vacuum …. In yet other embodiments, one of the pressures sources … can be omitted, or the pressure sources … ***can be fluidly coupled and/or integrally formed***." Ex. 1 at 15:65-16:1 & 21:50-61; *see also id.* at 7:36-39 ("In some embodiments, the pressure source can be a pump (e.g., an electric pump …) while, in other embodiments, the pressure source can include one or more syringes…."). In other words, a single vacuum source (e.g., a pump or an electric generator) can be both the first and second pressure sources (i.e., the pressure sources are the ***same***).[13] Where, as here, claims can reasonably be interpreted to include an embodiment of the patent, it is incorrect to construe them to exclude that embodiment. *E.g.*, *GE Lighting Sol.'s, LLC v. AgiLight, Inc.*, 750 F.3d 1304, 1311 (Fed. Cir. 2014).

Moreover, dependent Claim 4 removes any alleged ambiguity, reciting, "The clot treatment system of claim 1 ***wherein the first pressure source is the same as the second pressure source***." Ex. 2 at Claim 4. Under basic patent law canons, including the "doctrine of claim differentiation," Claim 1 must be construed to cover systems with either two different pressure sources or where the two sources are the ***same***.[14] *Littelfuse, Inc. v. Mersen USA EP Corp.*, 29

---

[12] Truvic also makes two "legal" arguments (that doctors must perform PE procedures for Truvic to infringe and that doctors usually do not telescope when performing DVT procedures, Opp. at 10-11, 14), both of which confuse system and method patent claims and thus fail as a matter of basic patent law. *See* §II, *supra*, at 3-4 & n.6.

[13] Truvic also ignores that Inari ***has*** alternatively identified two different pressure sources in the Symphony system: one comprising Truvic's electric generator and the clot canister of the 24F handle that stores pressure, and another with the electric generator and the clot canister of the 16F that stores pressure. Brown Decl., ¶¶134-136, 145, 155-158, 163-170. These are two different pressure sources according to the '910 Patent.

[14] Truvic's expert had not heard of this doctrine. Thornton Tr. at 127:2-21. Notably, this doctrine is also relevant to Claim 5, which also depends on Claim 1 and additionally requires that the pressure sources be "an electric pump"—meaning that Claim 1 covers both

F.4th 1376, 1380 (Fed. Cir. 2022) ("By definition, an independent claim is broader than a claim that depends from it, so if a dependent claim reads on a particular embodiment of the claimed invention, the corresponding independent claim must cover that embodiment as well.").

Validity: Devoid of plausible noninfringement arguments, Truvic instead argues that Claim 1 is invalid because a person of ordinary skill in the art would have combined two prior art references ("Garrison," Ex. 29, and "Laub," Ex. 1021) to create a custom-built aspiration-based mechanical thrombectomy device with ≥16F telescoping catheters suited for treatment of PE. Opp. at 17-19. But Garrison focuses only on traditional thrombectomy systems for small arteries in the brain and does not disclose telescoping as in the '910 Patent. Brown Decl. ¶¶101-04, 210-17. Also, increasing Garrison's catheter size to ≥16F would make it unsuitable—indeed, inoperable[15]—for treating stroke because such catheters would not fit into the cerebral arteries, as even Truvic's experts admit. Turk Tr. at 80:12-15; Thornton Tr. at 177:23-179:6. Laub, for its part, does not disclose telescoping of large-bore (≥16F) aspiration catheters and also does not teach creating and applying stored vacuum pressure with a fluid control device. Ex. 1021.[16]

To boot, Truvic and its experts provide no compelling reason—i.e., the ***motivation*** required by *KSR*—to combine these two references. Although they argue that both are in the same general field, that is not enough. *Securus Techs, Inc. v. Glob. Tel*Link Corp.*, 701 F. App'x 971, 977 (Fed. Cir. 2017) ("broad characterization of [two references] as both falling within the

---

thrombectomy systems with an electric pump ***and*** those with syringes. Ex. 1 at Claim 5.

[15] *E.g.*, *Plas-Pak Indus., Inc. v. Sulzer Mixpac AG*, 600 F. App'x 755, 758 (Fed. Cir. 2015) ("[C]ombinations … that render the prior art 'inoperable for its intended purpose,' may fail to support a conclusion of obviousness."). Truvic also tries to suggest that Garrison telescopes by pointing to the disclosure of an aspiration catheter (2030) advanced through an arterial access device/sheath (2010)—i.e., at the insertion site of the catheter. It has long been known to use an access sheath (or guide catheter) and a single small-bore aspiration catheter to insert a catheter into a patient (Brown. Tr. at 51:2-53:19, 103:14-113:9), but that is ***not*** the kind of telescoping contemplated by the '910 Patent. Inari's telescoping requires that one aspiration catheter be "advanced" through another aspiration catheter (i.e., not an aspiration sheath) for increased reach, to permit multiple aspirations, and/or to provide increased steerability to the treatment site. Ex. 1 at 36:6-10 (requiring "a second clot aspiration assembly, including: a second catheter advanceable through the first catheter [of the first clot aspiration assembly]").

[16] Truvic seems to be trying to combine Garrison with every reference imaginable. Laub, for instance, is not a reference Truvic previously identified in pre-suit letters or the '691 IPR, so Inari could not have addressed it earlier. But, because the points above can be discerned from a review of Laub on its face and Mr. Brown's existing declaration (and admissions by Truvic witnesses above) Inari does not submit an expert declaration now that would prolong this motion, particularly when Truvic provides no compelling motivation to combine.

same alleged field … is not enough … to meet [the] burden of presenting a sufficient rationale to support an obviousness conclusion"); *Unicorn Energy AG v. Tesla Inc.*, No. 21-cv-7476, 2024 WL 3463356, at *9 (N.D. Cal. July 17, 2024) ("[T]hat two references fall within the same general field alone does not demonstrate motivation to combine.").

In making its obviousness argument, Truvic repeatedly uses out-of-context and cherry-picked testimony to incorrectly claim that Inari and its experts "admit" that it is common to repurpose thrombectomy devices and it would have been obvious to do so here. Opp. at, *e.g.*, 16-17. This ignores the specific, extensive, and detailed evidence that Inari presented in its motion explaining exactly why ***Inari's*** inventions are ***not*** obvious and why Inari made a deliberate and counterintuitive choice to ***not*** size up existing systems. Mot. at 7-9, 13-15, 27-30; Merritt Decl. ¶¶24-46; Brown Decl. ¶¶60-84. Truvic also takes out of context testimony about Penumbra's less effective[17] repurposed systems, which do not have larger than 16F catheters, cannot telescope as claimed in the '910 Patent, and many of which use off-the-shelf hemostasis valves. In other words, Truvic relies on testimony untethered to Inari's inventions, seemingly to deflect from Truvic's copying. As another example of Truvic's distortions, it even cites its ***own*** expert's testimony as "evidence" of what Inari's expert supposedly admitted. Opp. at 16 (citing only Thornton for a sentence beginning "Inari has admitted ….").

Finally, Truvic asks this Court to substitute its judgment for that of the Patent Office Examiner who—after reviewing Garrison and many other references before her—issued the '910 Patent. To overcome the statutory deference given to the Patent Office and the presumption of validity for issued patents generally (35 U.S.C. §282), Truvic resorts to disparaging Inari's Chief Medical Officer, inventor Dr. Thomas Tu, accusing him of "misle[ading]" the Examiner as to Garrison (Opp. at 8). There is absolutely ***zero*** evidence to support this allegation, Truvic has not pleaded (and cannot plead) a defense of inequitable conduct (Dkt. 25 at 29-42), and even Truvic's expert did not endorse (or know of) this farfetched accusation (Thornton Tr. at 188:14-189:20).

C. The '921 Patent Is Valid And Infringed

Infringement: Truvic and its expert do not provide a single noninfringement argument

[17] *E.g.*, https://onlinelibrary.wiley.com/doi/full/10.1002/hsr2.2031.

for the '921 Patent. They seem to have conceded that Symphony infringes the '921 Patent.

Validity: Truvic's invalidity arguments for the '921 Patent then rest almost entirely on its proposed construction for "filament" and a gerrymandered comparison of a particular figure of the Schaffer prior art reference to one of the figures of the '921 Patent.

As to the construction of "filament," Truvic divined its proposed construction ("one or more threads, lines, cords, ropes, ribbons, flat wires, sheets, or tapes," Thornton Decl. at ¶53) by cherry-picking a non-limiting, exemplary portion of the far wider discussion about "filament" in the '921 Patent specification ("the filament 150 can comprise one or several threads, lines, cords, rope, ribbon, flat wire, sheet, or tape," Ex. 2 at 9:15-17). But this approach ignores both how a person of ordinary skill in the art would use this non-technical term[18] ***and*** the full disclosure of the '921 Patent, both of which make clear that a "filament" has a more limited definition. Truvic's expert similarly fails to respond to the dictionary definitions cited in (or any other aspect of) Inari's expert's analysis. Thornton Decl. ¶¶48-53. Truvic's construction is also so broad that literally ***anything*** could be a filament, even things that clearly are not: hair ribbons, Scotch tape, sheets of paper, chain links, a bedsheet, plywood, and the list could go on. This cannot be right—as Truvic expert readily conceded at his deposition, agreeing that the ordinary meaning of "filament" has requirements ***beyond*** those of Truvic's broad construction, including that it must be "long and thin" and have "flexibility." Thornton Tr. at 116:12-118:11; 122:17-123:15. These are the exact requirements of Inari's construction. Mot. at 19-20; Brown Decl. ¶¶89-92.

In contrast to using a "filament," Schaffer uses two U-shaped rigid plastic or metal actuating members. Once Truvic's overly broad claim construction is rejected, Schaffer does not anticipate—indeed, Schaffer instead ***teaches away from*** using a flexible filament. It then also becomes clear

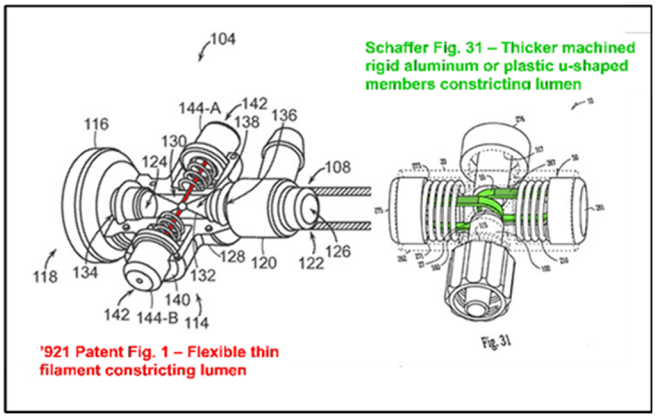

[18] Notably, Inari used the term "filament" because its engineers had used ***fishing*** filament (i.e., line) in prototypes. Merritt Decl. ¶57 (images show fishing line); Merrit Tr. at 218:25-223:18.

why Truvic's side-by-side graphic, comparing Figure 32 of Schaffer (which does not have a good view of the filament) with Figure 2 of the '921 Patent (Opp. at 3), is misleading. More accurately comparing the hemostasis valve of Schaffer (and its better view of the "filament" in Figure 31) and the '921 Patent, the "filament" of the '921 Patent (pictured, in red) looks nothing like the supposed "filament" (of Truvic's definition) of Figure 31 of Schaffer (pictured, in green).

Anticipating that its overbroad construction of "filament" will not survive, Truvic also presents an alternative argument, suggesting that Schaffer and another reference, Hartley, together render Claim 10 of the '921 Patent obvious. Opp. at 23-24. But Truvic hits the same wall as before: there was no motivation to combine these references at the time of Inari's invention. Truvic's suggested reasons to combine are cursory, at best, and ignore that it would not work to use Hartley's filament with Schaffer's valve. Doing so would change the way that Schaffer's valve functions by substituting the u-shaped actuating members that ***forcibly disengage*** from the outer wall of the tubular seal module to a flexible filament that ***relaxes while maintaining contact with the outer wall***. Brown Decl. ¶¶218-20, 227-28; Ex. 32 at [0077], [0081]. Combining Schaffer with Hartley would also negate Schaffer's assembly process, which requires a gap between the rigid u-shaped members to allow space for the tubular sealing member to be inserted. Brown Decl. ¶¶218-20, 227-28; Ex. 32 [0082]-[0083]. When there is good reason to ***not*** combine references, courts find as a matter of law that the required motivation is missing—exactly as should happen here. *E.g.*, *Medtronic, Inc. v. Teleflex Innovs. S.à.r.l.*, 69 F.4th 1341, 1348 (Fed. Cir. 2023) (affirming PTAB finding of no motivation to combine when modifying reference would render device inoperable to achieve its purpose); *Trivascular, Inc. v. Samuels*, 812 F.3d 1056, 1068 (Fed. Cir. 2016) (upholding finding of nonobviousness where "substitution would destroy the basic objective of" key feature of reference being modified).

Additionally, the Patent Office considered Hartley during '921 prosecution and Schaffer during prosecution of other Inari patents, never finding that these references render Inari's patents invalid. Mot. at 9. Truvic would nevertheless have this Court believe that the Patent Office and Examiner made another "mistake" here. Opp. at 19-24. This is not credible.

D. Secondary Considerations Of Nonobviousness Support An Injunction Here

Even without taking secondary considerations of nonobviousness (i.e., practical, common-sense evidence that, if had been obvious to put together two references, someone would have done so sooner) into account, Inari has established that there is no substantial question of validity. *See* Mot. at 27. But secondary considerations are the nail in the coffin. *Id.* at 29-30.

Truvic largely discounts the significance of secondary considerations, seemingly based on the incorrect suggestion that evidence on this point can only come from experts.[19] Opp. at 24. But secondary considerations, also referred to as "objective indicia of nonobviousness," ***must*** be considered by this Court. *In re Cyclobenzaprine Hydrochloride Extended-Release Capsule Pat. Litig.*, 676 F. 35 1063, 1075 (Fed. Cir. 2012) (court must consider secondary considerations, which may be "the most probative and cogent evidence in the record"). And evidence of secondary considerations can come from any source, not just experts. *Kinetic Concepts, Inc. v. Smith & Nephew, Inc.*, 688 F.3d 1342, 1370-71 (Fed. Cir. 2012) ("[O]bjective indicia of nonobviousness serve a particularly important role in a case … where there is a battle of scientific experts regarding the obviousness of the invention. In such a case, the objective indicia provide an unbiased indication regarding the credibility of that evidence.").

Here, there is overwhelming evidence of nonobviousness. Five decades with unchanged mortality rates (Brown Decl. ¶205; Hykes Decl. ¶5) establishes long-felt need; Inari's sales ramp shows commercial success (*id.* ¶29); the years of effort to get doctors to convert demonstrates skepticism (*id.* ¶¶16-17); and copying is prevalent (*e.g.*, Mot. at 13-15, 29-30). Truvic complains that Inari does not tie patented features to these secondary considerations, but Inari did exactly that in its motion. For instance, the FLAME study established that FlowTriever (i.e., which uses the large-bore catheters, aspiration techniques, and telescoping) resulted in a 90% improvement in mortality rates over traditional treatments for the highest risk PE cases. Mot. at 4-5. Likewise, Mr. Merritt explained that many doctors say that Inari's hemostasis valve is their "favorite part"

[19] Truvic's expert explained that he did not do any investigation or analysis of secondary considerations, did not know that he needed to (and did not) look at fact witness testimony on this issue, does not think that there were unexpected results (but does not know why he thinks that), and does not know if [redacted] market share means success. Thornton Tr. at 67:10-76:8.

of the FlowTriever device. Merritt Tr. at 205:4-206:22. Truvic claims that it could be other Inari innovations that drive success, but Truvic does little to identify non-patented Symphony features (other than touting its pump in place of syringes, but the pump is covered by the '910 Patent, as discussed above) that it expects will drive its own success. If it had been so obvious to innovate as Inari did, surely someone else would have done so sooner—but, in reality, Inari was first.

IV. TRUVIC HAS FAILED TO DEFEAT INARI'S SHOWING OF IRREPARABLE HARM

Inari indisputably spent the time, money, and effort—and had the vision—to create, patent, and commercialize a new treatment for PE and DVT, saving patient lives and creating a market for its products in the process. Mot. at 4-6. Indeed, Truvic and its expert do not seriously dispute that Inari's innovations made possible the first-ever custom-built mechanical thrombectomy devices for the treatment of PE and DVT. Nor do they dispute that there is a vastly underserved market for these devices, with most doctors still holding fast to legacy medical guidelines that continue to recommend lytics.[20] They likewise do not dispute that Inari controls the overwhelming majority of the market for PE ([redacted]) and a large portion for DVT ([redacted]). Truvic also cannot dispute that it has now hired ***seven*** of Inari's sales representatives (*see* n.1, *supra*), who constitute more than 25% of Truvic's Symphony sales force—or that Truvic has only a single employee fully dedicated to physician education for VTE thrombectomy (Scott Tr. at 39:17-40:7, 48:16-49:9).[21] Truvic likewise ignores (but does not dispute) that it underprices Inari, and its deponent even admitted that Truvic found out Inari's prices from doctors. *Id.*, 143:22-144:14.

Truvic testimony also reinforces that Inari's estimate that [redacted] was conservative. Mot. at 17. When pressed to disclose its own internal predictions for Symphony sales, it turns out that Truvic forecasts sales of [redacted]. Nalbone Tr. at 70:3-22; *see also* Scott Tr. at 153:10-155:6 (projecting [redacted] in Symphony sales in [redacted] alone). In short, Truvic predicts significantly greater of its own sales (i.e., larger

[20] Mr. Thornton is not familiar with the medical guidelines. Thornton Tr. at 216:20-217:11

[21] These numbers pale compared to Inari's large team of personnel who have spent over a decade on physician education and lobbying to update outdated medical guidelines. Mot. at 5.

lost sales for Inari—i.e., the only form of harm that Truvic recognizes) than Inari even predicted.

Lost sales may be quantifiable, but what is ***not*** quantifiable are the lost opportunities, price erosion, damage to customer relationships, impacts to Inari personnel and R&D efforts, and way that other competitors will be emboldened to infringe (Mot. at 17, 31-32)—all of which flow from Truvic's unchecked infringement. With Truvic's internal predictions, these harms are even more significant, but Truvic simply ignores these types of harm. Consistent with that, Truvic does not even mention cases cited by Inari, like *Celsis In Vitro, Inc. v. CellzDirect, Inc.*, that affirmed that it is appropriate to grant an injunction when—just like here—the patentee's products were its "flagship products" and were "in their growth phase and will soon be entering the mature phase with the highest revenues and strongest market position." 664 F.3d 922, 930 (Fed. Cir. 2012). Truvic likewise barely mentions the most relevant and analogous case: the *Illumina* case discussed in depth in Inari's motion. Mot. at 30-32. Instead, Truvic resorts to minimizing Inari's lost market share by calling it "insubstantial." Opp. at 28, 30.

Truvic's primary argument as to Inari's harm is that the presence of another bigger competitor (Penumbra) that is taking a comparatively larger share of the market than Truvic means Inari is not entitled to relief against Truvic. Truvic goes so far as to imply that it can continue infringing because the portion of the market that it is illegally taking is comparatively smaller than Penumbra's share. Opp. at 29-30. That is unequivocally ***not*** the law. *E.g., Robert Bosch LLC v. Pylon Mfg. Corp.*, 659 F.3d 1142, 1151 (Fed. Cir. 2011) (remanding for entry of injunction where lower "court's first legal error lies in its conclusion that the presence of additional competitors, without more, cuts against a finding of irreparable harm"). This stands as a full answer to Truvic's claims that Inari's impending harm is "insubstantial."

Truvic also argues that Inari must show that its patented features drive demand for its products. That is true, although incomplete. The *Apple* case on which Truvic relies makes clear that patented features need not be the ***only*** or even ***predominant*** drivers of demand, for instance. *Apple Inc. v. Samsung Elecs. Co.*, 809 F.3d 633, 642 (Fed. Cir. 2015) ("district court [] erred when it required [plaintiff] to prove that the infringing features were the exclusive or predominant reason why consumers bought [defendant]'s products"); *see also Apple Inc. v.*

Samsung Elecs. Co., 735 F.3d 1352, 1364 (Fed. Cir. 2013) (vacating denial of permanent injunction; plaintiff need not show that patented feature is "the one and only reason for consumer demand"). This is particularly important here, where Truvic admits that Inari has many innovations covered by the asserted patents. The fact that Truvic copied many Inari inventions that collectively drive demand should not become the excuse for why Inari cannot obtain relief.

Truvic is also wrong that there is no evidence that the specific patented features at issue here drive demand. Opp. at 3-4. Truvic relies on *Apple Inc. v. Samsung Elecs. Co.*, which reversed an injunction because "[plaintiff] has presented no evidence that directly ties consumer demand for the [product at issue] to its allegedly infringing feature." 695 F.3d 1370, 1375 (Fed. Cir. 2012). But Inari's motion addressed this issue by discussing the importance and contribution of the infringing features to the popularity of the embodying devices (Mot. at 10, 31), as did Mr. Meritt's declaration (Merritt Decl. ¶46). Mot. at 2, 6-7; Brown Decl. ¶¶75-78, 84, 243-48.

For instance, the '910 Patent covers core features of FlowTriever that are critically important to thrombectomy systems for PE, including the size of the catheters, the use of aspiration, pressure source(s) to generate and store vacuum, and the ability to telescope. Exh. 1 at Claim 1; Brown Decl. ¶¶105-06. There is no separating these features from what drives demand for Inari's FlowTriever, and Truvic does not posit what else might drive demand.[22]

Particularly for the '921 Patent, Truvic seemingly seeks to minimize the importance of Inari's innovations. The '921 Patent relates to hemostasis valves, which are critically important to mitigating blood loss during thrombectomy procedures. Hemostasis valves are not simply interchangeable widgets about which doctors do not have opinions, but they are instead carefully engineered medical-grade devices that are central to patient health and that have a meaningful effect on patient safety and physician comfort and experience when performing procedures. An off-the-shelf hemostasis valve for a large-bore catheter system would not have been effective or easy for doctors to use, and Mr. Merritt describes in detail in his declaration the work that he and

[22] By way of reminder, Inari's FlowTriever is primarily used for treatment of PE and practices both both the '910 and '921 Patents. Mot. at 2, 6-7; Brown Decl. ¶¶69-74, 231-48. Inari's ClotTriever is primarily used for treatment of DVT, does not telescope, and practices the '921 Patent. Truvic's expert did not dispute these points. In fact, he said he had not heard of ClotTriever. Thornton Tr. at 74:7-12.

his colleagues did to develop the ideas for their custom valve, how they coined the name for this valve (since even Truvic admits that "garrote" valves did not exist before Inari and its patents), how many design iterations had to be attempted before Inari landed on its final design, and why Inari's approach is so successful. Merritt Decl. ¶57. Not only that, but Mr. Merritt testified at his deposition about how doctors have often told Inari that the FlowTriever and ClotTriever hemostasis valve is those doctors' favorite feature. Merritt Tr. at 205:4-206:22. Even if those doctors do not understand the engineering of the valve (as most probably do not), and even if they do not realize that Truvic has copied Inari's valve because of the plastic cover that Truvic puts over it (remembering that Truvic could have used an off-the-shelf valve, as Penumbra does in some instances, but instead chose to create its own custom design that illegally mimicked Inari's), those doctors appreciate the one-handed operation and more effective patient results of the valve that Inari designed. Brown Decl. ¶¶111-12, 125; Merritt Decl. ¶¶60-61; Merritt Tr. at 204:1-8, 210:11-212:22; Tomalty Tr. at 66:1-13, 77:14-23; 79:25-84:24.

In short, Truvic's excuses do nothing to refute Inari's showing of irreparable harm.

V. TRUVIC HAS FAILED TO DEFEAT INARI'S SHOWING ON BALANCE OF HARDSHIPS

Inari has spent the past decade [redacted] developing mechanical thrombectomy systems to treat PE and DVT. By contrast, Truvic is a relative newcomer that has devoted limited resources to its product development, sales force, clinical data, and physician education team. Indeed, the only quantifiable estimate that Truvic provides for its investments in its technology is that Imperative Care spent [redacted] to acquire Truvic in 2021 ([redacted], Nalbone Tr. at 72:17-73:12 (predicting [redacted]), far faster than Inari is recouping its much larger investments. Truvic has not completed its FDA trial for PE, its launch for DVT has been slow and resulted [redacted], and it has hired only a tiny sales force (much of which it took from Inari). Mr. Nalbone admitted Symphony currently contributes only [redacted] of Imperative Care's revenue. *Id.* at 27:15-28:19.

In short, Truvic's investments in Symphony pale in comparison to Inari's own decade of dedicated work and investment. Nobody can or does seriously dispute that Inari created and

nurtured the market at issue here from scratch, and Imperative Care (although a much larger company) and Truvic's investments are paltry by comparison. With the additional information now provided by Truvic's opposition, it is fair to say that this factor tips heavily in Inari's favor.

VI. TRUVIC HAS FAILED TO DEFEAT INARI'S SHOWING ON PUBLIC INTEREST

Truvic argues that it would best serve the public interest if it were allowed to focus on winning over the 94% of VTE cases where traditional lytics are used in lieu of mechanical thrombectomy. Opp. at 4-5. But there is no evidence that Truvic is even trying to convert any doctors away from lytics. Inari has shown that Truvic's business model instead appears to be to steal Inari's customers (often using former Inari sales representatives) after Inari has done the hard work of winning them over to mechanical thrombectomy. Mot. at 16-17. Truvic has not even attempted to rebut that evidence. For example, Truvic has not identified a single doctor using Symphony who was not already using Inari's devices.

When it filed this motion, Inari did not know that [redacted] Symphony procedures have been conducted ([redacted] times fewer procedures than have been performed with Inari's devices) in the year that Symphony has been on the market. Scott Tr. at 23:24-24:20. That startingly low number speaks for itself: Symphony has ***not*** (yet) caught on like wildfire, despite its supposed improvements over Inari's devices. There are not already hordes of doctors who have become attached to Symphony or who will even notice if it is no longer available to them.

Whether Symphony has advantages over Inari's devices (or Penumbra's) is hotly disputed and is, at best, a matter of individual preference. For instance, Truvic presents a declaration from Dr. Tomalty of Alabama, who apparently prefers the Symphony system for certain high-risk cases because he experiences less blood loss using the Symphony system. With Dr. Tomalty, however, Truvic has cherry-picked a doctor who readily admits that he is ***not*** a typical user of the Inari or Truvic devices. Tomalty Tr. at 48:22-52:10. For instance, he departs from the practice of 90-95% of other Inari doctor-customers because he does not believe in using blood return systems at all.[23] *Id.* at 49:7-14. Moreover, when presented with [redacted]

[23] Inari has long offered a blood return system. A Truvic witness admitted that it [redacted] (Scott Tr. at 100:17-101:5), again mimicking Inari. This also calls into question Truvic's claims that Symphony has less blood loss than Inari's products.

[redacted] he did not contest that his estimates for blood loss with Inari's devices are overstated. *Id.* at 85:22-88:19.

At most, Dr. Tomalty understandably wants every imaginable treatment option available. He provided his opinions in a vacuum, however, without awareness of Truvic's business model, its practice of targeting Inari customers for sales, or the public policies and interests underlying the patent laws. *Id.* at 15:12-16:21, 17:5-23, 21:13-22:9, 118:23-124:18. He opines that patient health will suffer without Symphony, but readily admitted that—if Symphony became unavailable—he would revert to using Inari's devices. *Id.* at 118:23-124:18. He could not identify a single other doctor who would not do the same. *Id.*

As the cases cited in Inari's motion establish (Mot. at 34-35), courts routinely grant preliminary injunctions in patent cases where pharmaceuticals and medical devices are at issue—and, indeed, recognize the importance of doing so ***despite*** patient health concerns. *Sanofi-Synthelabo v. Apotex, Inc.*, 470 F.3d 1368, 1383 (Fed. Cir. 2006). They follow this approach for good reason: but for the protections of our patent system, the incentives to invest in and develop life-saving new technologies would be lost. If competitors could simply copy innovator products without any meaningful penalty, that would ultimately inure to detriment of patient health.

VII. TRUVIC'S ARGUMENTS ABOUT DELAY IGNORE THE HARM THAT INARI IS TRYING TO PREVENT

Finally, Truvic argues that Inari's motion should be denied because Inari delayed filing it. Opp. at 7-8. In essence, Truvic seeks to penalize Inari for attempting to avoid this lawsuit (*see* Al-Salam Dec. (Dkt. 24-5), ¶¶2-7 (explaining repeated attempts to avoid lawsuit)) and then agreeing to the reasonable briefing schedule that Truvic requested—and which gets the motion to decision before Inari experiences the harm that its motion seeks to prevent. But this is not the type of "delay" that leads courts to deny preliminary injunction motions, to put it mildly. *E.g., Alacritech*, 2005 WL 850729, at *7 (no "unexplained delay" where accused product not yet released; three months between complaint and preliminary injunction motion not undue delay); *Elantech Devices Corp.*, 2008 WL 1734748 (rejecting delay arguments and granting preliminary injunction where delay due to settlement discussions).

Inari has been clear that it seeks resolution of this motion before Truvic obtains its PE clearance and is able to ramp up sales of Symphony. *See* Dkt. 21 at 1 ("The timing [here] is intended to allow a decision in time to mitigate irreparable harm that Inari will suffer when Truvic's Symphony device is expected to receive FDA clearance for the treatment of … [PE] ***in early 2025***. Inari aims for a schedule that permits orderly briefing … but that allows a resolution in time to prevent the harm that will follow from this FDA clearance."). Inari told the Court and Truvic that this case is not about past damages and that the relief sought is forward-looking. Mot. at 16. And the two patents that are the focus of this motion did not even issue until December of 2023 (Ex. 2 at cover page) and May of 2024 (Ex. 1 at cover page), so it is not clear how Inari could have moved much faster, much less why it needed to do so. Even a case that Truvic cites supports Inari. *See Apple, Inc. v. Samsung Elecs. Co.*, 678 F.3d 1314, 1325 (Fed. Cir. 2012) (cannot deny injunction based on delay when patents just issued).

It is also important that Inari had understood—based on Truvic's public statements (Ex. 14) and until Mr. Nalbone's deposition—that Truvic was likely to obtain FDA clearance for PE in early 2025. Mot. at 16. Inari filed its motion a full 8-9 months in advance of that anticipated event, ***without Truvic ever clarifying that the actual timeline*** of its FDA trial [redacted]. But Mr. Nalbone testified that Truvic now estimates that it will complete the FDA study [redacted]. Nalbone Tr. at 71:13-72:4. It speaks volumes that Truvic argues delay on Inari's part in opposing Inari's motion, even as it withheld the facts relevant to the FDA timing from Inari and the Court, argued that Inari's motion is premature because Truvic has not yet received its FDA clearance, and seeks a leisurely (to put it mildly) overall case schedule (*see* Dkt. 39-1).

CONCLUSION

Faced with overwhelming evidence of its infringement, Truvic blames everyone but itself: it says that the Examiner "made a mistake" in issuing Inari; patents; it says that it should be allowed to infringe because it is not ***yet*** stealing much market share from Inari and has not ***yet*** been cleared to market for PE; Truvic then contradicts itself by saying that it cannot be enjoined because that would change the status quo; and Truvic says that it should be allowed to infringe because there are other competitors in the market. None of these excuses holds any water.

REDACTED VERSION OF DOCUMENT SOUGHT TO BE SEALED

Dated: October 14, 2024

By: */s/ Amanda Tessar*

Ramsey M. Al-Salam, Bar No. 109506
RAlsalam@perkinscoie.com
PERKINS COIE LLP
1201 Third Avenue, Suite 4900
Seattle, Washington 98101-3099

Amanda Tessar (admitted *pro hac vice*)
ATessar@perkinscoie.com
PERKINS COIE LLP
1900 Sixteenth Street, Suite 1400
Denver, Colorado 80202-5255

Daniel Keese (admitted *pro hac vice*)
DKeese@perkinscoie.com
PERKINS COIE LLP
1120 N.W. Couch Street, 10th Floor

Bingjie Kay Li, Bar No. 348764
Bli@perkinscoiecom
PERKINS COIE LLP
3150 Porter Drive
Palo Alto, CA 94304-1212

ATTORNEYS FOR PLAINTIFF INARI MEDICAL, INC.