UNITED STATES PATENT AND TRADEMARK OFFICE

BEFORE THE PATENT TRIAL AND APPEAL BOARD

GEOTAB INC. AND GEOTAB USA, INC.,
Petitioners,

v.

FRACTUS, S.A.
Patent Owner.

Case No. IPR2025-01026
Patent No. 11,031,677

DECLARATION OF DANIEL VAN DER WEIDE, Ph.D.
IN SUPPORT OF PETITION FOR
***INTER PARTES* REVIEW OF U.S. PATENT NO. 11,031,677**

Geotab Exhibit 1007
Geotab v. Fractus
~~**CONFIDENTIAL - PROTECTIVE ORDER MATERIAL**~~

TABLE OF CONTENTS

I. PERSONAL AND PROFESSIONAL BACKGROUND 1

II. MATERIALS REVIEWED AND CONSIDERED 5

III. MY UNDERSTANDING OF PATENT LAW 6

- A. Anticipation 8
- B. Obviousness 9
- C. Claim Interpretation 11

IV. DESCRIPTION OF THE RELEVANT FIELD AND THE RELEVANT TIMEFRAME 13

V. UNPATENTABILITY GROUND 15

VI. PERSON OF ORDINARY SKILL IN THE ART ("POSA") 15

VII. '677 PATENT 21

- A. Embodiments 21
- B. Challenged Claims 26

VIII. CLAIM INTERPRETATION 27

- A. "*perimeter*" (all claims) 27
- B. "*antenna box*" (claims 6-20) 28
- C. "*antenna rectangle*" (claims 6-20) 29
- D. "*antenna contour*" (all claims) 29
- E. "*complexity factor,*" "F_{21}," "F_{32}" (all claims) 31
  - 1. Grids 32
    - a. Second Grid G_2 32
    - b. First Grid G_1 34
    - c. Third Grid G_3 36
  - 2. Calculation 37
    - a. "F_{21}" 37
    - b. "F_{32}" 41
  - 3. Fractus's ADT Litigation argument 42
- F. "*wireless device*" (all claims) 43

~~CONFIDENTIAL - PROTECTIVE ORDER MATERIAL~~

G. "*4G communication standard*" terms (claims 1-5, 12-20) 43
1. Intrinsic evidence 44
2. Fractus's Litigation Arguments 45
IX. GROUND 1: DOU+CIAIS-QUADBAND RENDERS OBVIOUS CLAIMS 1-9 47
A. Dou (EX1013) 47
B. Ciais-Quadband (EX1009) 48
C. Dou+Ciais-Quadband 50
D. Claim 1 53
1. Preamble [1.PRE] 53
2. Limitation [1.a] 53
3. Limitation [1.b] 54
4. Limitation [1.c] 54
a. UMTS background 58
b. LTE background 59
5. Limitation [1.d] 61
6. Limitation [1.e] 63
7. Limitation [1.f] 84
a. Calculating F_{21} 84
i. Grid G_2 84
ii. $N_2 = 47$ 85
iii. Grid G_1 87
iv. $N_1 = 19$ 89
v. Calculation $F_{21} = 1.31$ 89
b. Calculating F_{32} 90
i. Grid G_3 90
ii. $N_3 = 140$ 90
iii. Calculation $F_{32} = 1.57$ 98
8. Limitation [1.g] 98

~~CONFIDENTIAL - PROTECTIVE ORDER MATERIAL~~

a. Case 1: "*second antenna*" is Dou GPS 99
b. Case 2: "*second antenna*" is Dou WiFi/Bluetooth 99
9. Limitation [1.h] 99
E. Claim 2 101
F. Claim 3 102
G. Claim 4 103
H. Claim 5 104
I. Claim 6 104
1. Preamble [6.PRE], [6.a]-[6.f] 104
2. Limitation [6.g] 105
3. Limitation [6.h] 105
4. Limitation [6.i] 106
5. Limitation [6.j] 107
6. Limitation [6.k] 108
J. Claims 7, 8 109
K. Claim 9 110
X. GROUND 2: DOU+CIAIS-QUADBAND+NAKANO RENDERS OBVIOUS CLAIMS 1-20 111
A. References 111
1. Nakano (EX1012).....111
2. Dou+Ciais-Quadband+Nakano 111
B. Claims 1-5.....114
C. Claims 6-9.....114
D. Claim 10 114
E. Claim 11 115
1. Limitation [11.a].....115
2. Limitation [11.b] 118
a. Calculating F_{21} 118
i. Grid G_2 118

~~CONFIDENTIAL - PROTECTIVE ORDER MATERIAL~~

ii. $N_2 = 45$ 120
iii. Grid G_1 120
iv. $N_1 = 16$ 121
v. Calculation $F_{21} = 1.49$ 121
b. Calculating F_{32} 122
i. Grid G_3 122
ii. $N_3 = 124$ 122
iii. Calculation $F_{32} = 1.46$ 128
F. Claim 12 128
1. Preamble [12.PRE], Limitations [12.a]-[12.b], [12.d]-[12.f] 128
2. Limitation [12.c] 129
3. Limitation [12.g] 130
4. Limitation [12.h] 130
5. Limitation [12.i] 131
6. Limitation [12.j] 131
7. Limitation [12.k] 132
G. Claims 13-14 133
H. Claim 15 133
I. Claim 16 135
J. Claim 17 135
K. Claim 18 136
L. Claim 19 136
M. Claim 20 136
XI. GROUND 3: BALIARDA-543 ANTICIPATES AND/OR RENDERS OBVIOUS CLAIMS 1-5 AND 12-20 139
A. Claims 1-5 and 12-20 Are Not Entitled To Priority Before April 7, 2014. 139
B. Analysis 150
XII. CONCLUSION 154
APPENDIX A: MATERIALS CONSIDERED 155

~~CONFIDENTIAL - PROTECTIVE ORDER MATERIAL~~

APPENDIX B: U.S. PATENT NO. 11,031,677 CLAIM LIST 160

~~CONFIDENTIAL - PROTECTIVE ORDER MATERIAL~~

ABBREVIATIONS

Abbreviation	Description
3GPP	3rd Generation Partnership Project
DCS	Digital Communication Service
DL	downlink
ETSI	European Telecommunication Standards Institute
E-UTRAN	Evolved Universal Terrestrial Radio Access Network
FDD	frequency division duplexing
GPS	Global Positioning System
GSM	Global System for Mobile Communications
HSDPA	High Speed Downlink Packet Access
HSPA	High Speed Packet Access
HSUPA	High Speed Uplink Packet Access
ISM	Industrial, Scientific, and Medical
ITU	International Telecommunication Union
LTE	Long Term Evolution
NAMPS	Narrowband Advanced Mobile Phone Service
PCB	printed circuit board
PCS	Personal Communication Service
PDA	personal digital assistant
PIFA	planar inverted-F antenna
TDD	time division duplexing

~~CONFIDENTIAL - PROTECTIVE ORDER MATERIAL~~

Abbreviation	Description
UL	uplink
UMTS	Universal Mobile Telecommunications System
UTRAN	UMTS Terrestrial Radio Access Network
UWB	ultra-wideband
VSWR	voltage standing wave ratio
WCDMA	Wideband Code Division Multiple Access
WiBro	Wireless Broadband
WiMax	Worldwide Interoperability for Microwave Access
WLAN	wideband local area network

~~CONFIDENTIAL - PROTECTIVE ORDER MATERIAL~~

I, Daniel van der Weide, Ph.D., declare:

1. I have been retained by Wolf, Greenfield & Sacks, P.C., counsel for Geotab Inc. and Geotab USA, Inc. ("Petitioners" or "Geotab"), to assess claims 1-20 (the "Challenged Claims") of U.S. Patent No. 11,031,677 ("the '677 patent") (EX1001). I am being compensated for my time at my standard rate, plus actual expenses. My compensation is not dependent in any way upon the outcome of the *inter partes* review of the '677 patent.

I. PERSONAL AND PROFESSIONAL BACKGROUND

2. My qualifications for forming the opinions set forth in this declaration are summarized below and explained in more detail in my current curriculum vitae, provided as EX1008. EX1008 also includes a list of my publications.

3. I am currently Grainger Institute for Engineering Professor of Electrical and Computer Engineering at the University of Wisconsin-Madison. I received my Bachelor of Science Degree in Electrical Engineering from the University of Iowa in 1987; my Master of Science Degree in Electrical Engineering from Stanford University in 1990; and my Ph.D. degree in Electrical Engineering from Stanford in 1993. I teach several courses in my area of expertise, which includes high-frequency electrical measurement and communications systems and advanced high-frequency circuit design and measurement.

~~CONFIDENTIAL - PROTECTIVE ORDER MATERIAL~~

4. I teach courses such as ECE 447 Applied Communications Systems, which focuses on the hardware aspects of wireless communications systems and uses the text "Microwave Transistor Amplifiers: Analysis and Design," 2nd Ed., Guillermo Gonzalez, Upper Saddle River NJ: Prentice-Hall (1997); ECE 420 Electromagnetic Wave Transmission, which focuses on electromagnetic theory applied to waveguides, transmission lines and antennas and uses the text "Engineering Electromagnetics and Waves" (custom text containing chapters from both Engineering Electromagnetics and Electromagnetic Waves) by U. S. Inan and A. S. Inan (Pearson Custom); ECE 547 Advanced Communications Circuit Design, which focuses on wireless communication systems circuits, antennas and protocols, and uses the text "Microwave and RF Design of Wireless Systems," David Pozar (Wiley, 2001).

5. I perform research on digital radio and communications systems ranging from RFID tags to lightwave transceivers, with emphasis on wireless circuits, antennas, and microwave communications. Some of my work on antennas (e.g. for medical imaging and RFID) has been supported by the National Science Foundation and commercialized. Furthermore, as a consultant, I have performed research on antennas for clients such as JDS-Uniphase (evaluating flexible substrates and metal deposition techniques for suitability as printed RFID antennas), Berntsen (designing and developing antennas for geolocation and buried

~~CONFIDENTIAL - PROTECTIVE ORDER MATERIAL~~

asset marking) and Terso (designing and developing RFID antennas for low-temperature reagent and medical sample storage.) I have also sold ultrabroadband antennas to medical imaging researchers through my startup, Tera-X, LLC.

6. I have published results of my work in several peer-reviewed journals and presented my findings at recognized conferences. Some representative publications related to performance of planar antennas and means of fabrication in the timeframe relevant to the '677 patent include: M. Martinez and D.W. van der Weide, "Compact single-layer depolarizing chipless RFID tag," Microw. Opt. Technol. Lett., 58, 1897–1900 (2016); H. Y. Chen, A. S. Bhadkamkar, T. H. Chou, and D.W. van der Weide, "Vector backscattered signals improve piggyback modulation for sensing with passive UHF RFID tags," IEEE Transactions on Microwave Theory and Techniques, vol. 59, pp. 3538-3545 (2011); Chih-Chuan Yen, A.E. Gutierrez, D. Veeramani, and D.W. van der Weide (2007). Radar cross-section analysis of backscattering RFID tags. IEEE Antennas and Wireless Propagation Letters, 6(1), 279-81 (2007); H. Y. Chen, Y. W. Mak, S. Bae, A. Bhadkamkar, and D.W. van der Weide, "Wireless impedance measurement of UHF RFID tag chips," in IEEE MTT-S International Microwave Symposium Digest (MTT), 2012, pp. 1-3; H. Y. Chen, S. Bae, A. Bhadkamkar, Y. W. Mak, and D.W. van der Weide, "Coupling passive sensors to UHF RFID tags," in IEEE Radio and Wireless Symposium (RWS), 2012, pp. 255-258; Chih-Chuan Yen,

~~CONFIDENTIAL - PROTECTIVE ORDER MATERIAL~~

Dharmaraj Veeramani, Alfonso E. Gutierrez, and D.W. van der Weide, "RFID Tag Reading Effects of Cylindrical Conductive Packages," Proceedings of the 36th European Microwave Conference, pp. 733-736, Sept. 2006.

7. I am an expert in the field of antenna design and analysis with over two decades of experience spanning both academic research and industrial applications. My work has encompassed a wide range of antenna technologies, including planar, conformal, broadband, phased array, and near-field measurement systems. I have designed and optimized antennas for use in wireless communications, radar, medical devices, and sensing systems, often operating across challenging frequency regimes including UHF, microwave, and millimeter-wave bands. My academic contributions include numerous peer-reviewed publications on antenna characterization, impedance matching, radiation pattern synthesis, and electromagnetic simulation techniques.

8. Throughout my career, I have applied experimental, theoretical and computational methods to solve design antenna problems. This includes the use of full-wave electromagnetic solvers, analytical modeling, and inverse design approaches for optimizing radiation performance under real-world constraints. I have also developed and implemented measurement systems for validating antenna performance in both near-field and far-field configurations. In particular, I have led efforts to enhance near-field scanning and NF-to-FF transformations, which are

~~CONFIDENTIAL - PROTECTIVE ORDER MATERIAL~~

essential for characterizing large or high-frequency antennas in compact environments. These efforts have resulted in measurable improvements in characterization accuracy and throughput.

9. In addition to my technical work, I have served as a consultant and expert in matters involving antenna system performance, electromagnetic interference, and regulatory compliance. I have evaluated antenna-related claims in the context of intellectual property, product validation, and system interoperability. My combination of hands-on design experience, rigorous analysis capabilities, and familiarity with industry standards enables me to provide technically sound, legally defensible opinions on antenna-related technologies. I am a co-founder of ANTENNEX, B.V. (Eindhoven, Netherlands), which develops new characterization technologies for (especially) integrated antennas used in wireless devices, such as those in the patent.

II. MATERIALS REVIEWED AND CONSIDERED

10. I have reviewed the ’677 patent, its prosecution history, and the prior art and other documents and materials cited herein. For ease of reference, the full list of documents that I have considered is in Appendix A: Materials Considered. I have also considered the documents cited and referenced herein, even if not included in the exhibit list below. Each of these exhibits is a type of document that experts in my field would have reasonably relied upon when forming their

~~CONFIDENTIAL - PROTECTIVE ORDER MATERIAL~~

opinions and would have had access to either through the applicable patent office and/or well-known libraries, conferences, publications, organizations, and websites in the field as further discussed herein.

11. My opinions, as explained below, are based on my years of education, research, experience, and background in the field of design and fabrication of planar antennas and their application in compact-format packages as well as my investigation and study of relevant materials for this declaration. When developing the opinions set forth in this declaration, I assumed the perspective of a person having ordinary skill in the art, as set forth in Section VI below. In forming my opinions, I have studied and considered the materials identified in the table in Appendix A.

III. MY UNDERSTANDING OF PATENT LAW

12. In developing my opinions, I discussed various relevant legal principles with Petitioners' attorneys. I understood these principles when they were explained to me and have relied upon such legal principles, as explained to me, in the course of forming the opinions set forth in this declaration. My understanding in this respect is as follows:

13. I understand that "*inter partes* review" (IPR) is a proceeding before the United States Patent & Trademark Office for evaluating the patentability of an issued patent's claims based on prior-art patents and printed publications.

~~CONFIDENTIAL - PROTECTIVE ORDER MATERIAL~~

14. I understand that, in this proceeding, Petitioner has the burden of proving that the challenged claims of the ’677 patent are unpatentable by a preponderance of the evidence. I understand that “preponderance of the evidence” means that a fact or conclusion is more likely true than not true.

15. I understand that, in IPR proceedings, claim terms in a patent are given their ordinary and customary meaning as understood by a person of ordinary skill in the art (“POSA”) in the context of the entire patent and its prosecution history. If the specification or prosecution history provides a special definition for a claim term that differs from the meaning the term would otherwise possess, that special definition applies. If a claim element is expressed as a “means” for performing a specified function, I understand that it covers the corresponding structure described in the specification and equivalents of the described structure. I have applied these standards in preparing the opinions in this declaration.

16. I understand that determining whether a particular patent or printed publication constitutes prior art to a challenged patent claim can require determining the effective filing date (also known as the priority date) to which the challenged claim is entitled. I understand that for a patent claim to be entitled to the benefit of the filing date of an earlier application to which the patent claims priority, the earlier application must have described the claimed invention in sufficient detail to convey with reasonable clarity to the POSA that the inventor

~~CONFIDENTIAL - PROTECTIVE ORDER MATERIAL~~

had possession of the claimed invention as of the earlier application's filing date. I understand that a disclosure that merely renders the claimed invention obvious is not sufficient written description for the claim to be entitled to the benefit of the filing date of the application containing that disclosure.

17. I understand that for an invention claimed in a patent to be patentable, it must be, among other things, new (novel—or in other words not anticipated) and not obvious from the prior art. My understanding of these two legal standards is set forth below.

A. Anticipation

18. I understand that, for a patent claim to be "anticipated" by the prior art (and therefore not novel), each and every limitation of the claim must be found, expressly or inherently, in a single prior-art reference. I understand that a claim limitation is disclosed for the purpose of anticipation if a POSA would have understood the reference to disclose the limitation based on inferences that a POSA would reasonably be expected to draw from the explicit teachings in the reference when read in light of the POSA's knowledge and experience.

19. I understand that a claim limitation is inherent in a prior art reference if that limitation is necessarily present when practicing the teachings of the reference, regardless of whether a person of ordinary skill recognized the presence of that limitation in the prior art.

~~CONFIDENTIAL - PROTECTIVE ORDER MATERIAL~~

B. Obviousness

20. I understand that a patent claim may be unpatentable if it would have been obvious in view of a single prior-art reference or a combination of prior-art references.

21. I understand that a patent claim is obvious if the differences between the subject matter of the claim and the prior art are such that the subject matter as a whole would have been obvious to a person of ordinary skill in the relevant field at the time the invention was made. Specifically, I understand that the obviousness question involves a consideration of:

- the scope and content of the prior art;
- the differences between the prior art and the claims at issue;
- the knowledge of a person of ordinary skill in the pertinent art; and
- if present, objective factors indicative of non-obviousness, sometimes referred to as "secondary considerations." To my knowledge, the Patent Owner has not asserted any such secondary considerations with respect to the '677 patent.

22. I understand that in order for a claimed invention to be considered obvious, a POSA must have had a reason for combining teachings from multiple prior-art references (or for altering a single prior-art reference, in the case of obviousness in view of a single reference) in the fashion proposed.

~~CONFIDENTIAL - PROTECTIVE ORDER MATERIAL~~

23. I further understand that in determining whether a prior-art reference would have been combined with other prior art or with other information within the knowledge of a POSA, the following are examples of approaches and rationales that may be considered:

- combining prior-art elements according to known methods to yield predictable results;
- simple substitution of one known element for another to obtain predictable results;
- use of a known technique to improve similar devices in the same way;
- applying a known technique to a known device ready for improvement to yield predictable results;
- applying a technique or approach that would have been "obvious to try," such as choosing from a finite number of identified, predictable solutions, with a reasonable expectation of success.
- known work in one field of endeavor may prompt variations of it for use in either the same field or a different one based on design incentives or other market forces if the variations would have been predictable to one of ordinary skill in the art;
- some teaching, suggestion, or motivation in the prior art that would have led one of ordinary skill to modify the prior-art reference or

~~CONFIDENTIAL - PROTECTIVE ORDER MATERIAL~~

to combine prior-art reference teachings to arrive at the claimed invention. I understand that this teaching, suggestion or motivation may come from a prior-art reference or from the knowledge or common sense of one of ordinary skill in the art.

24. I understand that a universal motivation known in a particular field to improve technology can provide a motivation to combine prior art references even without any hint or suggestion in the references themselves. I also understand that obviousness is determined in light of all the facts and that a given course of action often has simultaneous advantages and disadvantages, and that this does not necessarily obviate motivation to combine teachings from multiple references.

25. I understand that for a single reference or a combination of references to render the claimed invention obvious, a POSA must have been able to arrive at the claimed invention by modifying, implementing, or combining the teachings of the applied references.

C. Claim Interpretation

26. I understand that determining whether a claimed invention is novel and non-obvious requires comparing the prior art to the claims. In this section, I discuss the interpretations I have applied to certain claim terms in my analysis.

27. I have been informed that patent claims are construed from the viewpoint of a POSA at the time of the alleged invention. I have been informed

~~CONFIDENTIAL - PROTECTIVE ORDER MATERIAL~~

that patent claims generally should be interpreted consistent with their plain and ordinary meaning as understood by a person of ordinary skill in the art in the relevant time period (at the time of the purported invention, or the so called "effective filing date" of the patent application), after reviewing the patent claim language, the specification, and the prosecution history (the intrinsic record).

28. I have further been informed that a POSA must read the claim terms in the context of the claim itself, as well as in the context of the entire patent specification. I understand that in the specification and prosecution history, the patentee may specifically define a claim term in a way that differs from the plain and ordinary meaning. I understand that the prosecution history of the patent is a record of the proceedings before the U.S. Patent and Trademark Office and may contain explicit representations or definitions made during prosecution that affect the scope of the patent claims. I understand that an applicant may, during the course of prosecuting the patent application, limit the scope of the claims to overcome prior art or to overcome an examiner's rejection, by clearly and unambiguously arguing to overcome or distinguish a prior art reference, or to clearly and unambiguously disavow claim coverage.

29. In interpreting the meaning of the claim language, I understand that a POSA may also consider "extrinsic" evidence, including expert testimony, inventor testimony, dictionaries, technical treatises, other patents, and scholarly

~~CONFIDENTIAL - PROTECTIVE ORDER MATERIAL~~

publications. I understand this evidence is considered to ensure that a claim is construed in a way that is consistent with the understanding of those of skill in the art at the time of the alleged invention. This can be useful for technical terms whose meaning may differ from its ordinary English meaning. I understand that extrinsic evidence may not be relied on if it contradicts or varies the meaning of claim language provided by the intrinsic evidence, particularly if the applicant has explicitly defined a term in the intrinsic record.

30. I understand that determining whether a claimed invention is novel and non-obvious requires comparing the prior art to the challenged claim. In this Declaration, I apply the above standards to the terms in the challenged claims. The meanings of specific terms are discussed below in connection with evaluating the disclosure in the priority documents.

IV. DESCRIPTION OF THE RELEVANT FIELD AND THE RELEVANT TIMEFRAME

31. I have reviewed the ’677 patent (EX1001) and its prosecution history (EX1002).

32. I have been instructed by Petitioners’ counsel to assume that there are **three** relevant timeframes for evaluating the record from the point of view of a person having ordinary skill in the art (“POSA”), which I define below.

~~CONFIDENTIAL - PROTECTIVE ORDER MATERIAL~~

a. ***First***, I am told to assume that the relevant timeframe for my analysis of the prior art in **Grounds 1 and 2**, e.g., Dou, Ciais-Quadband, and Nakano (discussed below), is **on or before June 19, 2006**.

b. ***Second***, as I explain for **Ground 3** below, I was asked to form an opinion concerning how a POSA would have understood the disclosures in the ’429 application when it was filed on **December 21, 2006**.

c. ***Third***, I am told to assume that the relevant timeframe for my analysis of the prior art in **Ground 3** (e.g., Baliarda-543) is **no earlier than April 7, 2014**.

33. Based on my review of this material, I believe that the relevant general field for the purposes of the ’677 patent is wireless communication devices with integrated antennas. The ’677 patent pertains to the field of wireless communication devices—specifically, to portable, handheld terminals (e.g., smartphones, multimedia devices) that incorporate multiple-body configurations (such as clamshells, sliders, or pivoting devices) and integrated multi-band antenna systems for operation across cellular and other wireless bands.

34. This field includes electromagnetic and antenna design for handheld, compact, multi-body devices; physical form factor integration of RF components

~~CONFIDENTIAL - PROTECTIVE ORDER MATERIAL~~

to support multi-frequency operation (e.g., GSM, LTE, Wi-Fi); and optimizing antenna performance in constrained, dynamic form factors.

V. UNPATENTABILITY GROUND

35. I have considered these unpatentability Grounds:

Ground	Reference(s)	Claims	Basis
1	Dou, Ciais-Quadband	1-9	obviousness
2	Dou, Ciais-Quadband, Nakano	1-20	obviousness
3	Baliarda-543	1-5, 12-20	anticipation/ obviousness

36. I have been instructed by Petitioners' counsel to assume that Dou (EX1013), Ciais-Quadband (EX1009), Nakano (EX1012), and Baliarda-543 (EX1040) are each prior art to the Challenged Claims addressed in each respective Ground.

VI. PERSON OF ORDINARY SKILL IN THE ART ("POSA")

37. I have been informed and understand that for purposes of assessing whether prior art references disclose every element of a patent claim (thus "anticipating" the claim) and/or would have rendered the claim obvious, the patent and the prior art references must be assessed from the perspective of a person having ordinary skill in the art ("POSA") to which the patent is related, based on the understanding of that person at the time of the patent claim's priority date.

~~CONFIDENTIAL - PROTECTIVE ORDER MATERIAL~~

38. I have been informed and understand that various factors may be considered in assessing the level of a POSA, including (1) educational level of the inventor; (2) type of problems encountered in the art; (3) prior art solutions to those problems; (4) rapidity with which innovations are made; (5) sophistication of the technology, and (6) educational level of workers active in the field. I have also been informed and understand that not all of these factors may be present in every case, and one or more of these or other factors may predominate in a particular case. I have further been informed and understand that these factors are not exhaustive but are merely a guide to determining the level of ordinary skill in the art. I have applied this standard throughout my declaration.

39. The '677 patent involves technology in the field of in the field of portable, handheld terminals (e.g., smartphones, multimedia devices) that incorporate multiple-body configurations (such as clamshells, sliders, or pivoting devices) and integrated multi-band antenna systems for operation across cellular and other wireless bands. *See* EX1001, *passim*. I have been asked to provide my opinions as to the state of the art in this field before June 19, 2006. I use this time frame because I have been informed by counsel that Patent Owner Fractus's earliest-alleged conception date is June 19, 2006.

40. Fractus has defined a POSA as follows:

~~CONFIDENTIAL - PROTECTIVE ORDER MATERIAL~~

> [A] person with at least a bachelor's degree in electrical engineering, computer science, or a similar degree and at least four years of experience in applied electromagnetics with an emphasis on antennas. Alternatively, the person of ordinary skill in the art would have a master's degree in electrical engineering (or similar discipline) and at least two years of similar experience.

EX1018, 8-9 (¶32). I agree with this definition of a POSA and have applied the above definition of a POSA in this declaration.

41. The basis for my familiarity with the level of ordinary skill is my own technical experience and my interaction with students and professionals in the field of compact, broadband planar antennas (and the field of antenna design more broadly) who were at this level of skill as of June 2006. I am well-aware of the knowledge that a POSA would have had at the time this patent was written as I have been actively consulting, teaching, and carrying out research with such students and collaborators in these fields for approximately 15 years prior to June 2006.

42. My opinion identifying the POSA's level of ordinary skill is consistent with the problems encountered in the art, the prior art solutions to those problems, the rapidity with which innovations are made, the sophistication of the technology, and the educational level and professional capabilities of workers in

~~CONFIDENTIAL - PROTECTIVE ORDER MATERIAL~~

the field. This is shown, among other things, by the prior art references described in the Grounds below.

43. By June 2006, the field of wireless communication devices—particularly handheld multimedia terminals and smartphones—had matured significantly. Manufacturers routinely confronted the challenge of integrating multi-band antennas into compact, user-friendly enclosures. A key problem was maintaining acceptable radio-frequency (RF) performance despite increasingly complex and miniaturized form factors, such as clamshells, sliders, and swiveling devices. These configurations often altered the electromagnetic environment in which antennas operated, introducing detuning effects and radiation pattern variability.

44. To address these challenges, the prior art included several approaches for integrating internal antennas within multi-body devices, as I discuss in detail below. Designers employed planar inverted-F antennas (PIFAs), monopoles, fractal geometries, and multi-feed structures to achieve broadband and multiband operation. Techniques such as antenna diversity, adaptive impedance matching, and spatial separation were well known to mitigate interference and optimize performance. The prior-art references I assert (alone or in combination), as well as numerous publications and commercial devices, demonstrate that antenna

~~CONFIDENTIAL - PROTECTIVE ORDER MATERIAL~~

geometry could be adjusted parametrically to control metrics such as bandwidth, return loss, and gain across varying device orientations and enclosures.

45. The field of mobile RF antenna integration progressed rapidly during the 2000s and 2010s, fueled by intense commercial competition and evolving wireless standards (e.g., GSM, UMTS, LTE, Wi-Fi, Bluetooth, GPS). Each new smartphone generation typically introduced novel mechanical designs and antenna layout strategies to accommodate additional frequency bands, more transceivers, and evolving SAR (specific absorption rate) requirements. Academic and industrial research routinely reported new methods for compact, multiband antennas using simulation-driven optimization, materials engineering, and hybrid mechanical-electromagnetic co-design.

46. Simulation tools such as CST Microwave Studio, HFSS, and ADS Momentum became standard in the design process, allowing engineers to evaluate full-wave 3D antenna performance under a variety of boundary conditions, including open and closed device states. The field demanded a high level of integration between industrial design, RF engineering, and mechanical packaging, and it attracted a globally competitive workforce pushing continuous incremental improvements.

47. By June 2006, I possessed at least the level of skill of a POSA to which the ’677 patent is directed.

~~CONFIDENTIAL - PROTECTIVE ORDER MATERIAL~~

48. I have worked with many people who fit the characteristics of the POSA, and I am familiar with their level of skill in and around June 2006. When developing the opinions set forth in this declaration, I assumed the perspective of a POSA as set forth above

49. For **Grounds 1 and 2**, except as noted below, whenever I offer an opinion in this declaration about the knowledge of a POSA, the manner in which a POSA would have understood the claims of the ’677 patent or its description, the manner in which a POSA would have understood the prior art, or what a POSA would have been led to do based on the prior art, I am referencing the June 2006 timeframe, even if I do not say so specifically in each case.

50. For **Ground 3**, following instructions from Petitioners’ counsel, I evaluate the evidence from the POSA’s perspective on two different dates.

51. ***First***, when evaluating the written description in U.S. Patent Application No. 11/614,429 (“the ’429 application,” published as Baliarda-543 (EX1040)), whenever I offer an opinion in this declaration about the knowledge of a POSA, the manner in which a POSA would have understood the claims of the ’677 patent or its description, the manner in which a POSA would have understood the prior art, or what a POSA would have been led to do based on the prior art, I am using the POSA’s perspective on **December 21, 2006**—the ’429 application’s filing date—even if I do not say so specifically in each case.

~~CONFIDENTIAL - PROTECTIVE ORDER MATERIAL~~

52. ***Second***, when evaluating the disclosure in Baliarda-543 as compared to the scope and content of Challenged Claims 1-5 and 12-20, I am using the POSA's perspective on or before **April 7, 2014**, even if I do not say so specifically in each case.

VII. '677 PATENT[1]

A. Embodiments

53. The '677 patent concerns a "multifunction wireless device" with "smartphone functionality" that has an "antenna system." The antenna system is disposed "within" the device and comprises a "ground plane" and "first" and "second" antennas. The specification describes a wireless device having multiband antennas (antennas covering multiple frequency ranges associated with communication standards), where the "first" and "second" antennas cover different frequency ranges. EX1001, 9:50-10:28, 25:1-16, 25:47-58.

54. The '677 patent states that the wireless device is preferably capable of communicating (has "wireless connectivity") using different communication standards that use frequency bands in different frequency ranges. EX1001, 9:50-10:28, 25:1-16, 25:47-58. Thus, the '677 patent describes a device that uses antennas, including multiband antennas, designed to send and receive

[1] Throughout this Declaration all emphasis is added unless otherwise indicated.

~~CONFIDENTIAL - PROTECTIVE ORDER MATERIAL~~

electromagnetic signals in frequency ranges used by the frequency bands for various communication standards. EX1001, 12:24-26 ("A structure of [the invention's] antenna system... is able to support different radiation modes."), 13:25-28 ("The resulting antenna structure… includes a plurality of portions that allow the operation of the antenna system in multiple frequency bands.").

55. The '677 patent asserts that the antenna system's design "is intended to use efficiently as much of the volume" within a defined space "in order to obtain a superior RF performance… in at least one frequency band." EX1001, 13:58-63. The patent refers to the resulting antenna structure's "geometrical complexity" (EX1001, 13:67-14:10) and characterizes an antenna design's "level of complexity" in terms of "complexity factor"—which the specification defines as a mathematical calculation based on antenna dimensions using specific analytic steps, as explained below §VIII (claim construction).

56. The patent asserts,

> In accordance with embodiments of the invention, ***the level of complexity of an antenna contour can be advantageously parameterized by means of two complexity factors***, hereinafter referred to as F_{21} and F_{32}, which capture and characterize certain aspects of the geometrical details of the antenna contour (such as for instance its edge-richness, angle-richness and/or discontinuity-richness) when viewed at different levels of scale.

EX1001, 16:54-61.

~~CONFIDENTIAL - PROTECTIVE ORDER MATERIAL~~

57. The patent asserts that "the factor F_{21} is related to the number of paths that [an antenna system] structure… provides to electric currents… to excite radiation modes…. In general, the more frequency bands and/or radiation modes that need to be supported by the antenna structure… the higher the value of F_{21} that needs to be attained." EX1001, 19:37-46. The patent suggests that an "antenna contour" with "complexity factor F_{32} larger than a certain minimum value" will "achieve some degree of miniaturization" but may have "reduced capability to operate in multiple frequency bands and/or limited RF performance." EX1001, 20:49-61. The specification asserts that "effective antenna design" is achieved by specifying antenna complexity factors using any combination of F_{32} values between 1.10 and 1.90 in 0.05 increments, and F_{21} values between 1.05 and 1.80 in 0.05 increments. EX1001, 21:10-12, 20:66-21:14.

58. The specification shows a single example of an antenna, e.g., an "antenna contour" reflecting a physical antenna layout (Figs. 12A, 17H), with a known frequency response (Fig. 19A) that the patent evaluates for "*complexity factor*" (EX1001, 38:55-40:56).

~~CONFIDENTIAL - PROTECTIVE ORDER MATERIAL~~

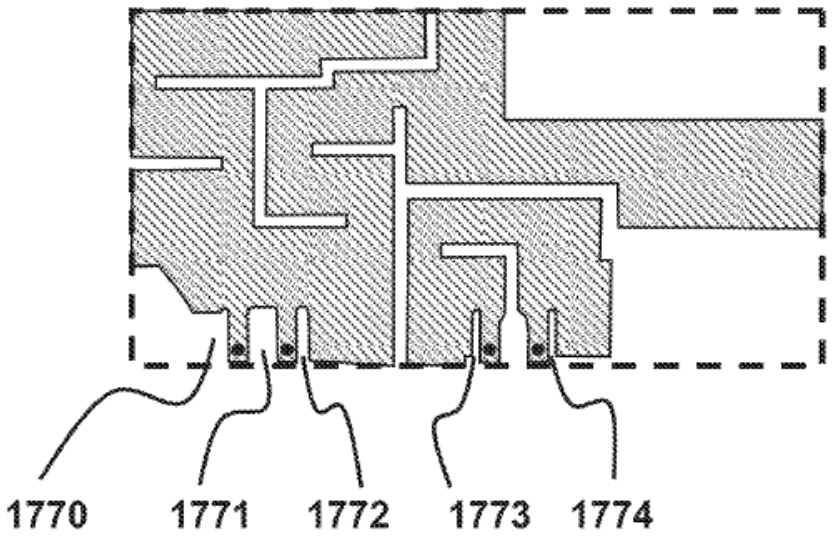

FIG. 17H

59. This antenna covers—meaning it can send and receive electromagnetic signals at—radio frequencies that are compatible with GSM and UMTS communication standards. EX1001, Fig. 19A, 38:55-39:35, 40:59-41:21. The operable frequency ranges are determined at a given voltage standing wave ratio (VSWR), a design parameter that measures how well the antenna works with the device electronics (e.g., transceiver) that send and receive electrical signals that the antenna converts to RF radiation. EX1001, 1:67-2:2

~~CONFIDENTIAL - PROTECTIVE ORDER MATERIAL~~

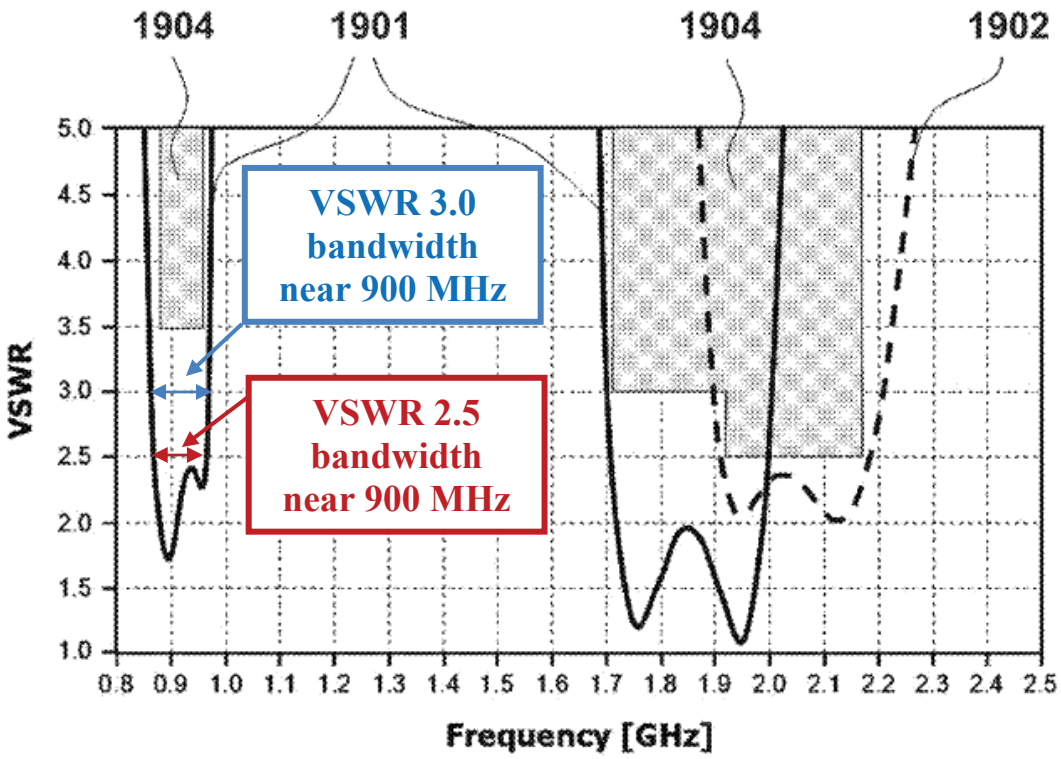

FIG. 19A

60. A ***lower*** VSWR means ***a better match*** between the antenna and the device electronics (e.g., transceiver), making the system more efficient at radiating energy. VSWR of 1:1 is a perfect match. Figure 19A shows that lower VSWR is associated with lower antenna bandwidth, illustrating a well-known tradeoff between impedance match (e.g., VSWR) and antenna bandwidth.

61. The specification describes "maximum" VSWR values for frequency ranges associated with GSM and UMTS communication standards (EX1001, 37:8-38, Table 1), and Figure 19A shades regions with VSWR above the specification's

~~CONFIDENTIAL - PROTECTIVE ORDER MATERIAL~~

"maximum" levels at different frequency ranges used with different communication standards. EX1001, 40:67-41:6.

62. While the specification describes "complexity factors" for each step of "progressive modification" of an antenna contour from Figures 17A-17H (EX1001, Table 2, 38:55-40:58), the patent never shows the antenna performance—e.g., frequency response—associated with each "progressive modification" or that antenna's "complexity factors."

B. Challenged Claims

63. The '677 patent has 20 claims, each concerning a "wireless device." Appendix B provides a claim list. Claims 1, 6, and 12 are independent.

64. Claim 1 recites a "*wireless device*" comprising an "*antenna system*" ([1.PRE]-[1.a]). The "*antenna system*" comprises "*a ground plane*" ([1.b]) and a "*first*" ([1.c]) and "*second antenna*" ([1.g]). The "*first antenna*" comprises a "*first antenna contour*" ([1.e]), with "*complexity factor* F_{21}" being "*at least 1.20*" and "*complexity factor* F_{32}" being "*less than 1.75*" ([1.f]). Claims 6 and 12 have similar limitations as claim 1 and add limitations concerning first/second antenna frequency coverage, placement, or shape.

65. Dependent claims add further limitations concerning a "*third antenna*" and the shape, frequency coverage, placement, and "*complexity factor*" for the various antennas

~~CONFIDENTIAL - PROTECTIVE ORDER MATERIAL~~

VIII. CLAIM INTERPRETATION

66. I apply relevant claim constructions below in relation to the claim elements in which they appear. Where I do not discuss a particular claim construction, I apply the ordinary meaning that the claim term would have had to a POSA at the time of invention.

67. I understand that the ’677 patent expressly defines several claim terms—e.g., “*antenna contour*,” “*complexity factor*,” and others—whose construction is discussed below.

68. I also understand that in litigation with ADT, Fractus argued constructions for (and the court construed) common claim terms from two patents—a parent (U.S. Patent No. 8,738,103) and a child (U.S. Patent No. 11,349,200)—having the same specification as the ’677 patent. EX1020, 1; EX1001, code (63); EX1003, code (63).

69. In forming my opinions, I applied the claim constructions described below, as directed by Petitioners’ counsel.

A. “*perimeter*” (all claims)

70. In the ADT Litigation, the court construed “perimeter” in a parent (U.S. Patent No. 8,738,103) and a child (U.S. Patent No. 11,349,200) having the same specification as the ’677 patent. EX1020, 1; EX1001, code (63); EX1003, code (63). The court rejected Fractus’s proposed construction and construed

~~CONFIDENTIAL - PROTECTIVE ORDER MATERIAL~~

"perimeter" in the patents as: "boundary of an object" excluding "any notion of 'following the shape of the radiating element and extending it as necessary to complete the boundary'" as Fractus had urged. EX1020, 14-17; EX1021.

71. The ADT court's construction of "*perimeter*" comports with the ordinary meaning. In my opinion, a POSA would have agreed with the court's construction of "*perimeter*" in the ADT litigation.

B. "*antenna box*" (claims 6-20)

72. The '677 patent says that Fig. 1B's element 103 shows an "antenna box," which the patent defines as:

> the minimum-sized parallelepiped of square or rectangular faces that completely encloses the antenna volume of space and wherein each one of the faces of the minimum-sized parallelepiped is tangent to at least one point of the volume. Moreover, each possible pair of faces of the minimum-size parallelepiped shares an edge forming an inner angle of 90°.

EX1001, Fig. 1B, 11:24-38.

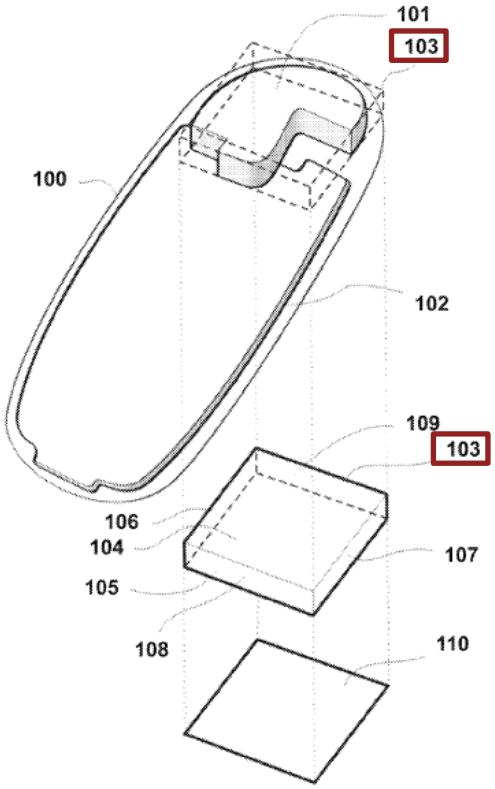

FIG. 1B

~~CONFIDENTIAL - PROTECTIVE ORDER MATERIAL~~

C. "*antenna rectangle*" (claims 6-20)

73. The '677 patent defines an "antenna rectangle" as "the orthogonal projection of the antenna box along the normal to the face with largest area of the antenna box." EX1001, 14:11-14.

D. "*antenna contour*" (all claims)

74. The '677 patent says that Figure 3 shows an "*antenna contour*" 350 (blue outline below) for "antenna element 300" within "*antenna rectangle*" 351 (*supra* §VIII.C) formed from an orthogonal projection through "*antenna box*" 301 (*supra* §VIII.B). EX1001, Fig. 3 (annotated below), 27:7-10, 27:44-28:4.

75. The "*antenna contour*" 350 comprises "disjointed subsets of segments" from "*perimeter* 357" (*supra* §VIII.A), "segments 356 corresponding to the orthogonal projection of part 306," and "segments" 352/353 "associated to the *perimeter* of aperture[s]" 302/303, respectively. EX1001, 27:62-28:4.

~~CONFIDENTIAL - PROTECTIVE ORDER MATERIAL~~

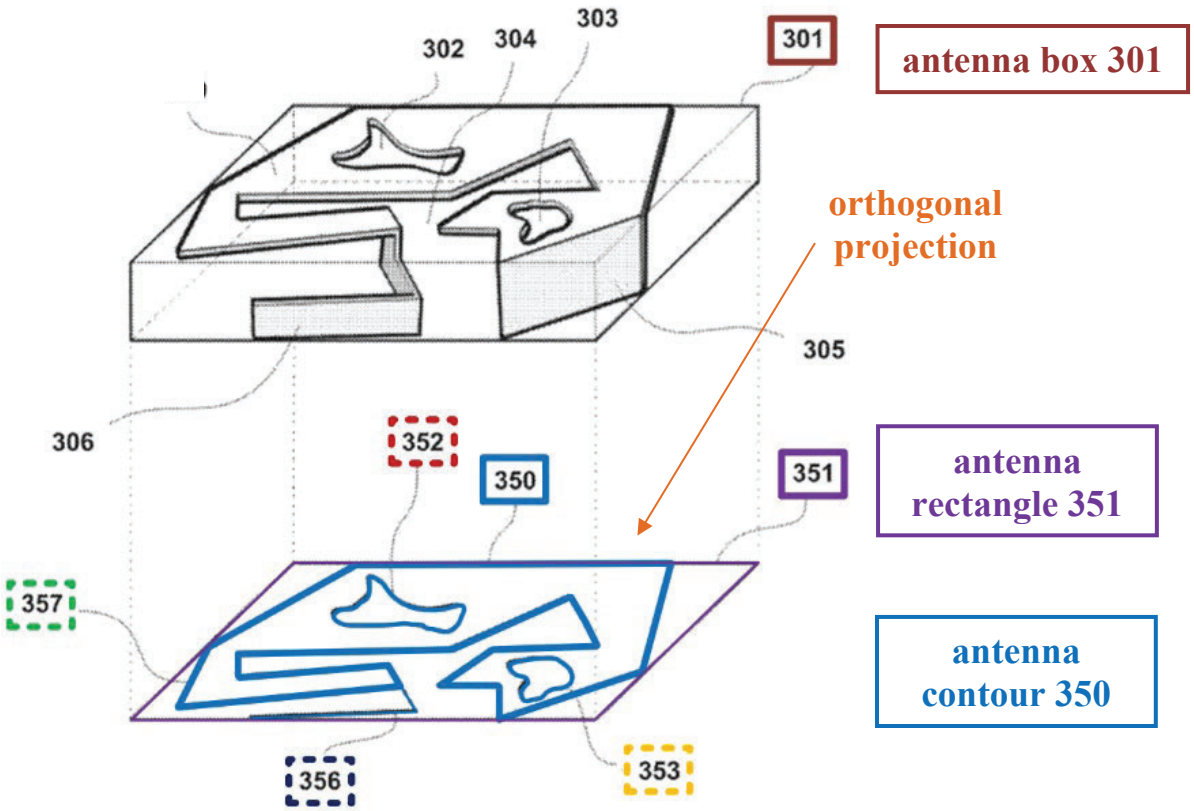

EX1001, Fig. 3 (annotated)

76. The '677 patent states, "[t]he antenna contour of the antenna system is a set of joined and/or disjointed segments comprising" (with numbering added):

> [1] ***the perimeter*** of one or more antenna elements ***placed in the antenna rectangle***,
>
> [2] ***the perimeter*** of closed slots and/or closed apertures defined within the antenna elements, and/or [3] the ***orthogonal projection onto the antenna rectangle*** of ***perimeters*** of antenna elements, or ***perimeters*** of or parts of antenna elements that are ***placed in the antenna box*** but not in ***the antenna rectangle***.

EX1001, 15:6-27 ("Not all the segments that form the antenna contour need to be connected (i.e., to be joined). In some cases, the antenna contour comprises two,

~~CONFIDENTIAL - PROTECTIVE ORDER MATERIAL~~

three, four or more disjointed subsets of segments.”). Figure 3 shows antenna contour 350 comprising each “disjointed subset”: [1] *perimeter* 357 and projection 356, [2] *perimeter* 352, and [3] *perimeter* 353. EX1001, Fig. 3 (annotated detail below).

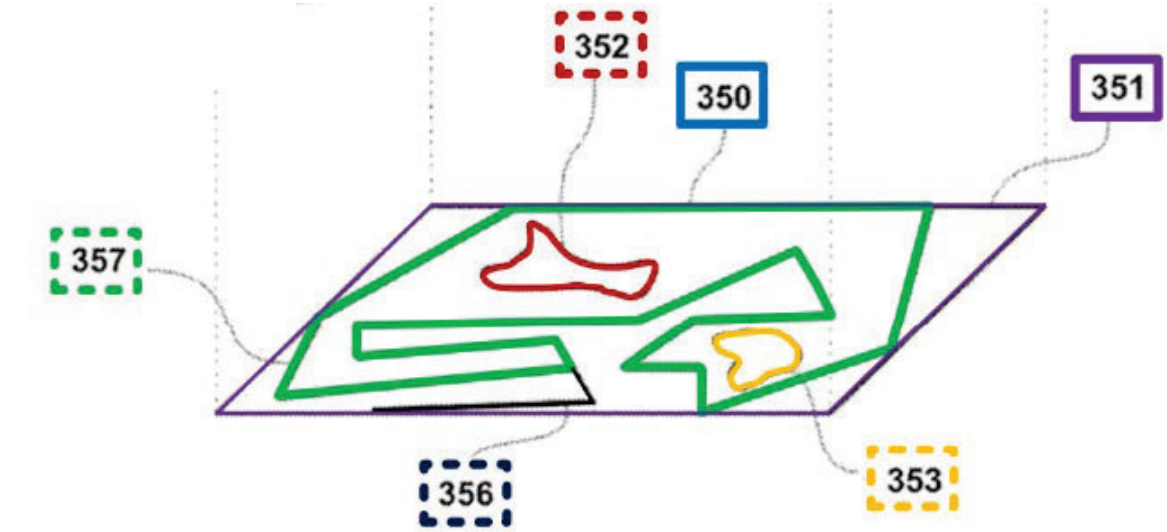

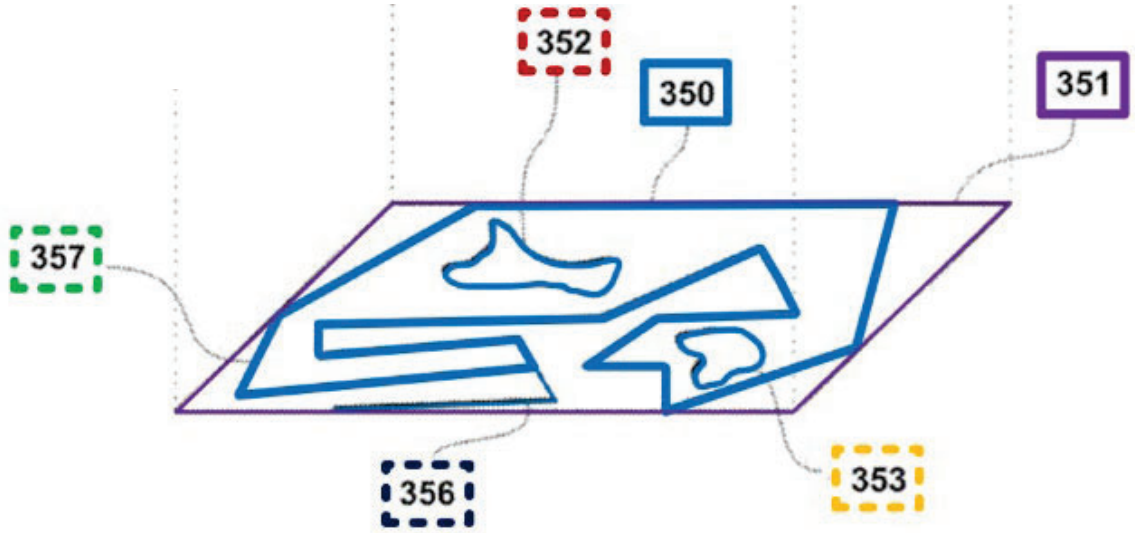

E. “*complexity factor,*” “F_{21},” “F_{32}” (all claims)

77. Every claim recites a “*complexity factor*.” The ’677 patent says that “*complexity factor*” is a number that characterizes an “*antenna contour*.” EX1001,

~~CONFIDENTIAL - PROTECTIVE ORDER MATERIAL~~

16:54-61; *supra* §VIII.D. The "*complexity factor* F_{21}" and "F_{32}" have no ordinary meaning in the art.

78. The '677 patent specification defines these factors as the numerical result of a calculation based on operations involving overlaying a series of three specifically-formulated grids (G_1, G_2, and G_3, respectively) on the "*antenna rectangle*"—thereby overlaying an "*antenna contour*"—as explained below. EX1001, 16:62-17:5.

1. Grids

79. The '677 patent states that "[g]rids G_1 and G_3 are constructed from grid G_2[.]" EX1001, 17:16-17.

a. Second Grid G_2

80. The second grid G_2 cell size and aspect ratio—defined as "the ratio between [cell] width and… height"—are chosen to "perfectly tesselate[]" the "*antenna rectangle*" with "an odd number of columns and an odd number of rows." EX1001, 17:18-22. The specification associates the *antenna rectangle's* long side (e.g., "width") with grid columns, while it associates the short side (e.g., "height") with grid rows. EX1001, 17:23-46.

81. The '677 patent states that each grid has "substantially square or rectangular cells" (EX1001, 16:62-65) and further requires that if "two different combinations of a number of columns and a number of rows of cells of the second

~~CONFIDENTIAL - PROTECTIVE ORDER MATERIAL~~

grid produce a cell as square as possible, a second grid is selected such that the aspect ratio"—the ratio of cell width to cell height—"is larger than 1." EX1001, 17:55-64. The closer the cell's aspect ratio is to 1 (e.g., wherein the height and width of the cell are the same), the closer the cell is to square.

82. The '677 patent says Figure 14B shows a "second grid" 1402 "tessellat[ing]" *antenna rectangle* 1400 with 9 columns and 5 rows. EX1001, Fig. 14B (annotated below), 34:38-53, 34:60-64.

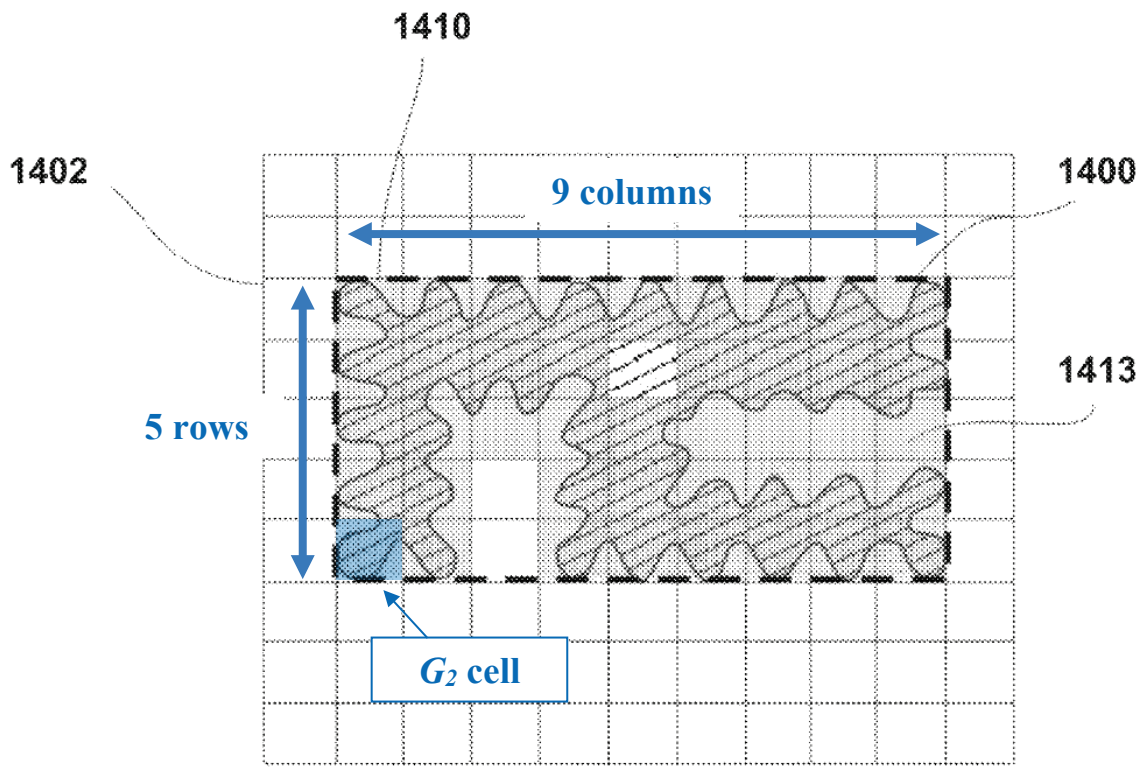

FIG. 14B

~~CONFIDENTIAL - PROTECTIVE ORDER MATERIAL~~

b. First Grid G_1

83. The ’677 patent states that “[a] first cell of the grid G_1 is… created by grouping four cells of grid G_2 in such a manner that a corner of the first cell is the feeding point corner, and the first cell is positioned completely inside the antenna rectangle.” EX1001, 18:55-58.

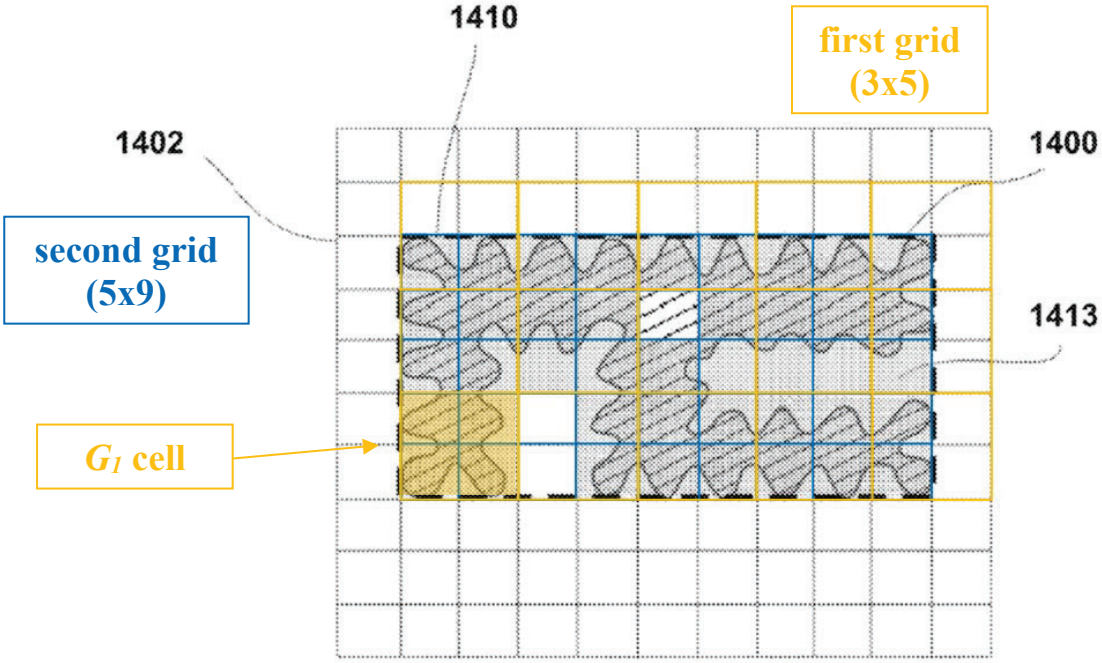

FIG. 14B

~~CONFIDENTIAL - PROTECTIVE ORDER MATERIAL~~

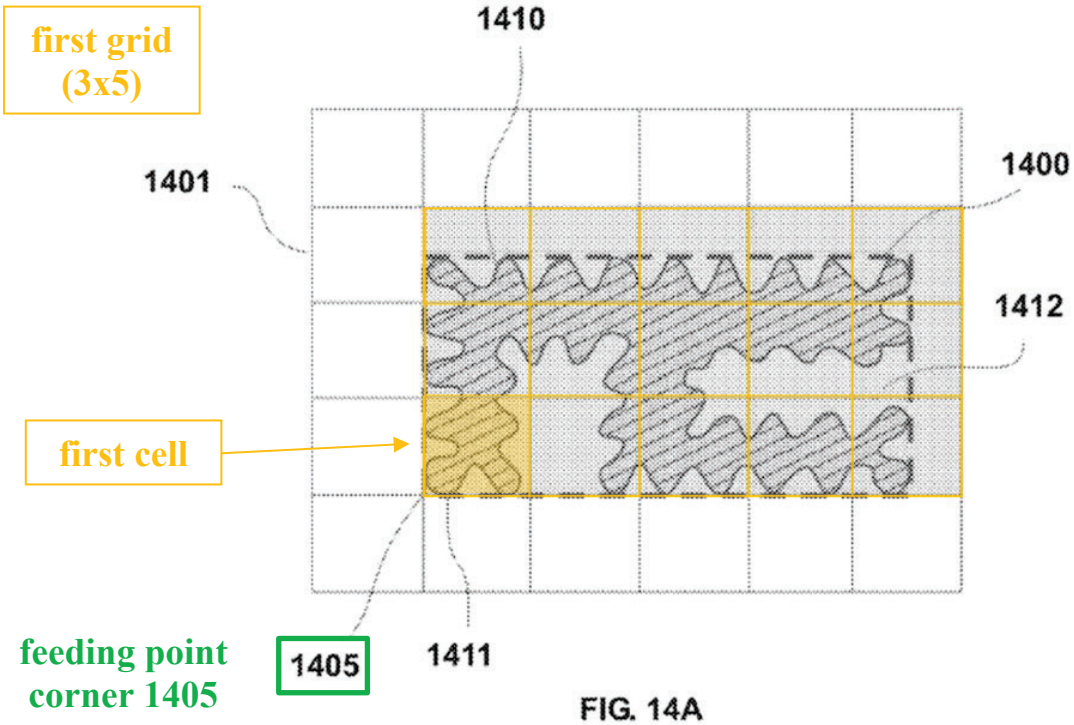

84. The patent defines a "feeding point corner" as "the corner of the antenna rectangle closest to the feeding point of the antenna system responsible for the [system's] operation in its lowest frequency band." EX1001, 18:16-19. After "placing" the first cell, "other [G_1] cells can be placed uniquely defining the relative position of [G_1] with respect to the antenna rectangle." EX1001, 18:59-61. As shown below, the relevant cells of a first grid are the minimum set of cells that are all of the same size as the first cell and encompass the entire antenna contour.

~~CONFIDENTIAL - PROTECTIVE ORDER MATERIAL~~

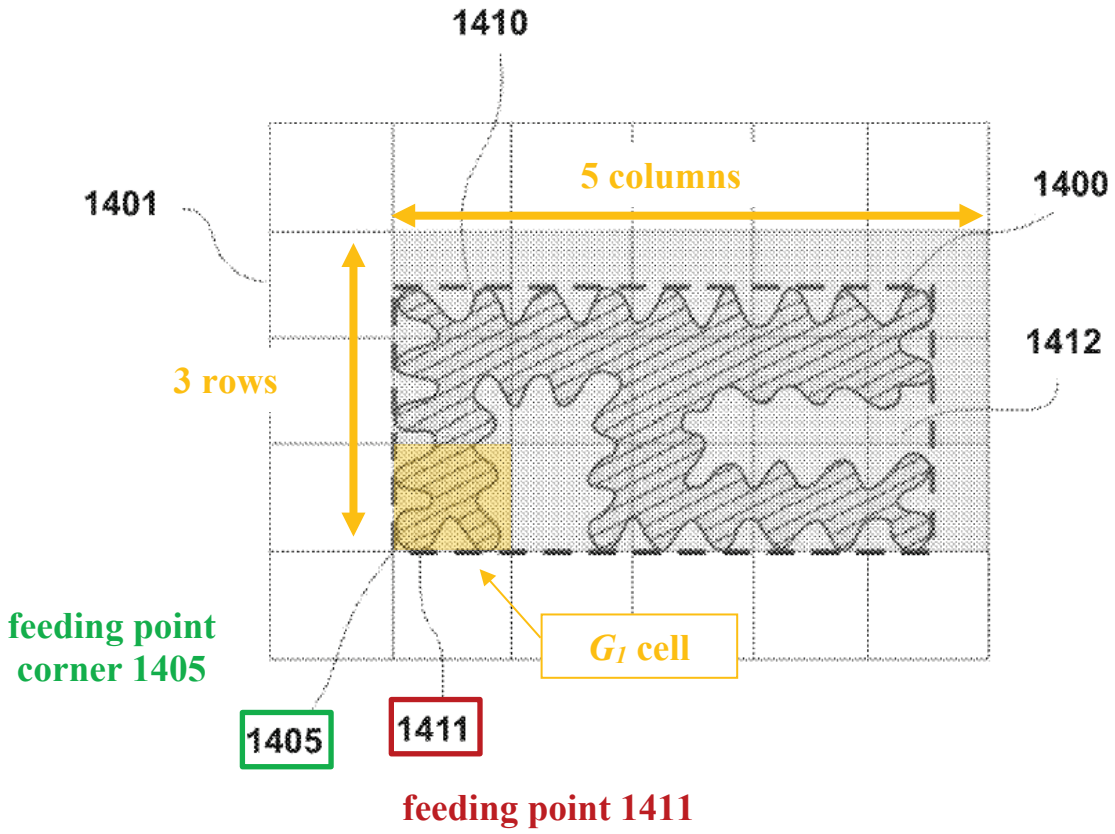

85. The '677 patent says that Figure 14A shows a first grid 1401, with "feeding point 1411, located substantially close to the bottom left corner of the antenna rectangle 1405 (being thus the feeding point corner)." EX1001, Fig. 14A (annotated above), 34:38-53.

c. Third Grid G_3

86. The third grid (G_3) fits twice as many rows and columns within the *antenna rectangle* as the second grid (G_2), thereby replacing "each cell of… grid G_2 … with 2-by-2 cells of… grid G_3[.]" EX1001, 19:51-60. Each third grid's cell has width (W_3) that is half the second grid cell width, and height (H_3) that is half the second grid cell height. *Id.* The '677 patent states that Figure 14C shows third

~~CONFIDENTIAL - PROTECTIVE ORDER MATERIAL~~

grid 1403 formed from second grid 1402. EX1001, Figs. 14B, 14C, 34:38-41, 34:65-35:3.

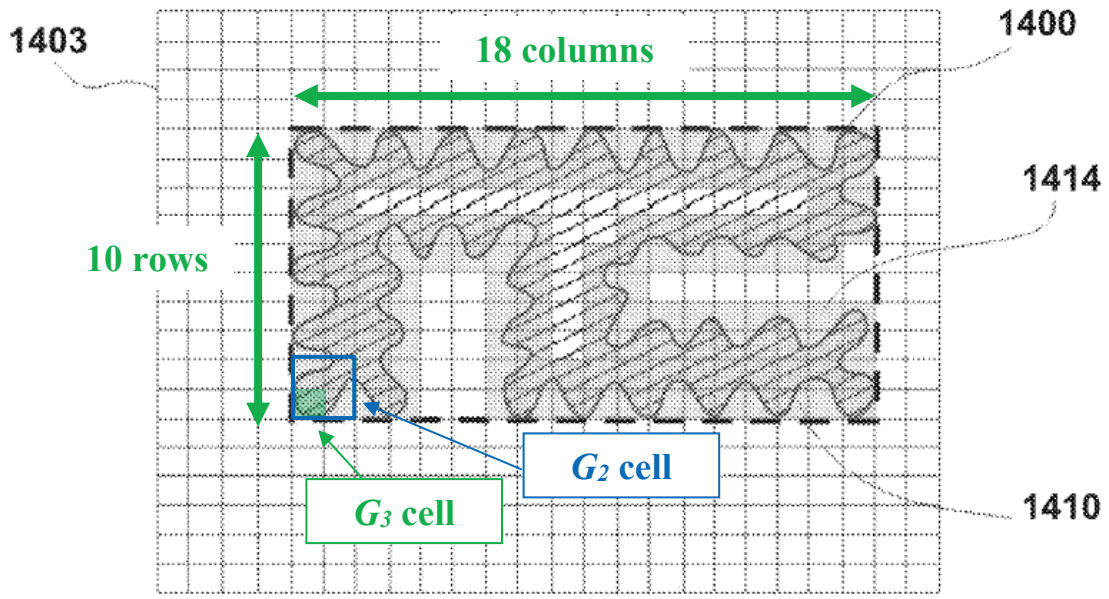

FIG. 14C

2. Calculation

87. The claims recite two "*complexity factors*" named "F_{21}" and "F_{32}." The '677 patent defines each "*complexity factor*" as follows.

a. "F_{21}"

88. The '677 patent computes "F_{21}" by:

- **[1]** counting the number of cells N_1 in grid G_1 that **[a]** "are at least partially inside the antenna rectangle" and **[b]** "include at least a point of the antenna contour"; and

~~CONFIDENTIAL - PROTECTIVE ORDER MATERIAL~~

- **[2]** counting the number of cells N_2 in grid G_2 that **[a]** "are completely inside the antenna rectangle" and **[b]** "include at least a point of the antenna contour[.]"

EX1001, 19:1-7. The '677 patent states "in the present invention the boundary of the cell is also part of the cell[.]" EX1001, 19:4-5.

89. The '677 patent defines *complexity factor* F_{21} as:

$$F_{21} = -\frac{log(N_2) - log(N_1)}{log(1/2)}$$

EX1001, 19:8-14.

90. A POSA would have understood "log" to mean base 10 logarithm. However, since the logarithm in different bases are related by a multiplicative constant, it would not matter what base was used to evaluate this complexity factor equation so long as the same base was used for each logarithm. The ratio in the complexity factor equation cancels out the multiplicative factor (highlighted in the examples below). In other words, expressing

$$A = 10^x = 2^y,$$

then

$$log_{10}(A) = x\ log_{10}(10) = x = y\ log_{10}(2),$$

and

$$log_2(A) = x\ log_2(10) = y\ log_2(2) = y.$$

~~CONFIDENTIAL - PROTECTIVE ORDER MATERIAL~~

91. This means, depending on whether the logarithm is base 2 or 10 in this example,

$$x = y\, log_{10}(2),$$

$$x\, log_2(10) = y$$

92. As a numeric example, suppose $N_2 = 42$ and $N_1 = 15$. Then using a base 10 logarithm,

$$F_{21} = -\left(\frac{\log_{10}(N_2) - \log_{10}(N_1)}{\log_{10}(1/2)}\right) = -\left(\frac{\log_{10}(42) - \log_{10}(15)}{(-1)\log_{10}(2)}\right)$$

$$= \left(\frac{\log_{10}\left(42/15\right)}{\log_{10}(2)}\right) = \left(\frac{0.447}{0.301}\right) = 1.49.$$

93. Using a base 2 logarithm gives the same result,

$$F_{21} = -\left(\frac{\log_2(N_2) - \log_2(N_1)}{\log_2(1/2)}\right) = -\left(\frac{\log_2(42) - \log_2(15)}{(-1)\log_2(2)}\right)$$

$$= \left(\frac{\log_2\left(42/15\right)}{\log_2(2)}\right) = \left(\frac{1.49}{1}\right) = 1.49.$$

94. In the analysis below I use the base 10 logarithm as the "log" function to evaluate the patent's complexity factor calculations.

95. Using Figure 14's *antenna contour* 1410, the patent describes:

- **a first grid** (Fig. 14A, 1401) with N_1="fifteen (15) cells," shown as shaded group 1412, meeting **[1][a]-[b]** above; and

~~CONFIDENTIAL - PROTECTIVE ORDER MATERIAL~~

- **a second grid** (Fig. 14B, 1402): with N_2="forty-two (42) cells," shown as shaded group 1413, meeting **[2][a]-[b]** above. Within *antenna rectangle* 1400, unshaded cells do not meet the requirement to **[2][b]** "include at least a point of the antenna contour[.]"

EX1001, Figs. 14A-14B, 34:54-64.

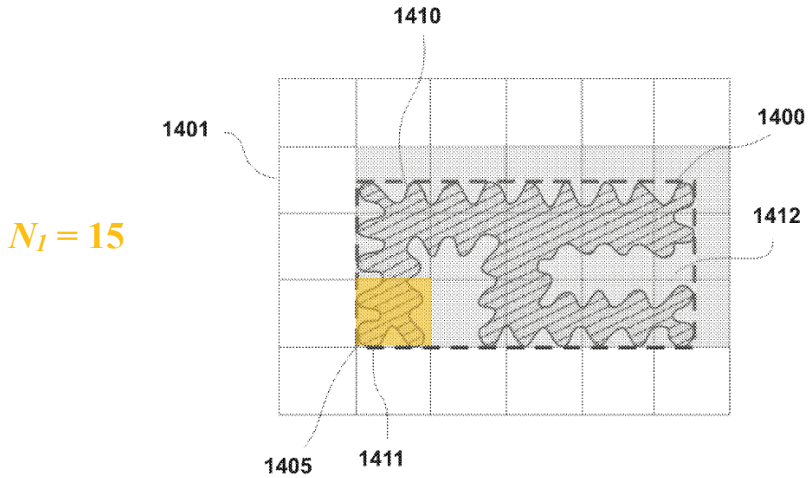

FIG. 14A

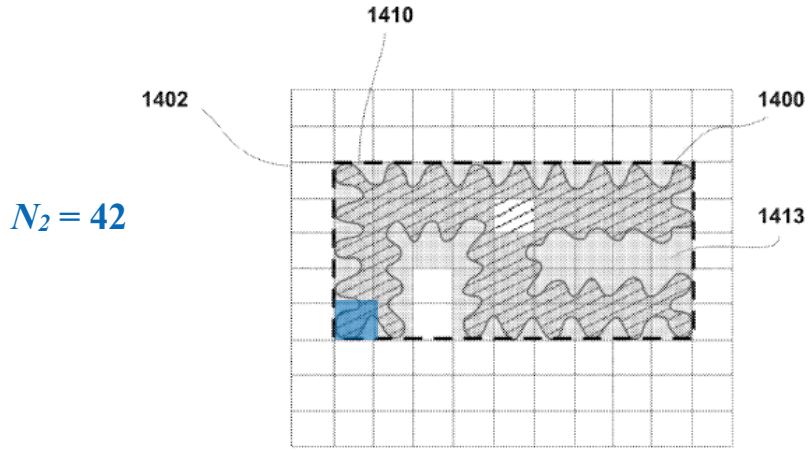

FIG. 14B

96. The complexity factor F_{21} for antenna contour 1410 is thus:

~~CONFIDENTIAL - PROTECTIVE ORDER MATERIAL~~

$$F_{21} = -\left(\frac{\log(N_2) - \log(N_1)}{\log(1/2)}\right) = -\left(\frac{\log(42) - \log(15)}{(-1)\log(2)}\right)$$

$$= \left(\frac{\log\left(42/15\right)}{\log(2)}\right) = \left(\frac{0.447}{0.301}\right) = 1.49.$$

EX1001, 35:4-10.

97. In performing this calculation, I used the relationship that the logarithm of a product is $\log(AB) = \log(A) + \log(B)$, so that

$$\log\left(\frac{A}{B}\right) = \log(A \times B^{-1}) = \log(A) + (-1)\log(B)$$

$$= \log(A) - \log(B).$$

b. "*F₃₂*"

98. The '677 patent computes "F_{32}" by further **[3]** counting the number of cells N_3 in grid G_3 that **[a]** "are completely inside the antenna rectangle" and **[b]** "include at least a point of the antenna contour[.]" EX1001, 19:61-67. The '677 patent defines *complexity factor* F_{32} as:

$$F_{32} = -\frac{log(N_3) - log(N_2)}{log(1/2)}$$

EX1001, 20:1-5.

99. Using Figure 14's *antenna contour* 1410, the patent describes **a third grid** (Fig. 14C, 1403) with N_3="one hundred and forty-two (142) cells," shown as

~~CONFIDENTIAL - PROTECTIVE ORDER MATERIAL~~

shaded group 1414, meeting **[3][a]-[b]**. EX1001, Figs. 14B-14C, 34:65-35:3. Unshaded cells in Figure 14C do not meet the G3 cell counting criteria.

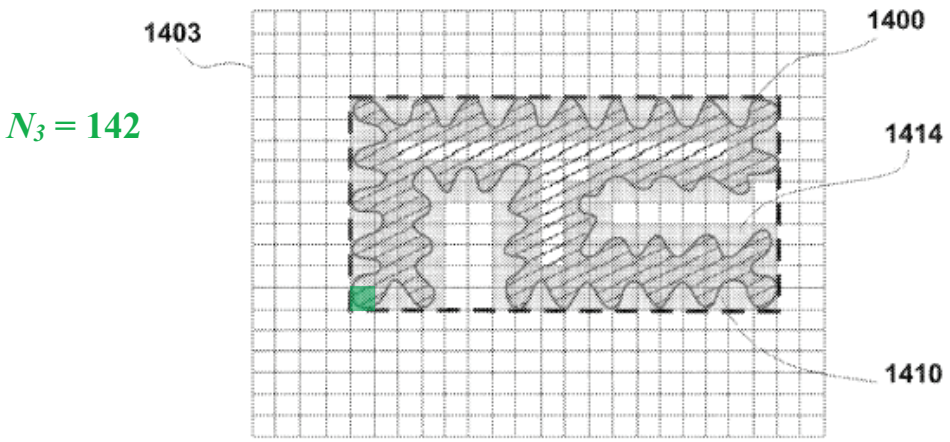

FIG. 14C

100. Using the $N_2 = 42$ result for Figure 14B, the *complexity factor* F_{32} for *antenna contour* 1400 is thus:

$$F_{32} = -\left(\frac{\log(N_3) - \log(N_2)}{\log(1/2)}\right) = -\left(\frac{\log(142) - \log(42)}{(-1)\log(2)}\right)$$

$$= \left(\frac{\log(142/42)}{\log(2)}\right) = \left(\frac{0.529}{0.301}\right) = 1.76.$$

EX1001, 35:11-17.

3. Fractus's ADT Litigation argument

101. In the ADT Litigation, Fractus argued that the '103 and '200 patent specifications—which are materially identical to the '677 patent specification—"explain precisely how to calculate the complexity factors F21 and F32[.]"

~~CONFIDENTIAL - PROTECTIVE ORDER MATERIAL~~

EX1017, 24. A POSA would have understood that Fractus's ADT Litigation construction concedes that the specification defines "*complexity factor*" and comports with the analysis *supra* §§VIII.E.1-VIII.E.2 applying the specification's instructions.

F. "*wireless device*" (all claims)

102. In the ADT Litigation, Fractus argued (and the court agreed) that "the ordinary meaning of 'wireless device'… refers to the nature of the communication," e.g., that the device communicates wirelessly. EX1020, 11.

G. "*4G communication standard*" terms (claims 1-5, 12-20)

103. The claims require antennas capable of operating with a "*4G communication standard*" (claims 1-5, 12-20): an "*antenna… configured to support [a] frequency band[]… associated with a 4G communication standard*" (claims 1-5), "*antenna… configured to… receive signals employing a 4G communication standard*" (claims 4-5), and an "*antenna… configured to… receive signals from a 4G communication standard*" (claims 12-20).

104. As shown below (*infra* §VIII.G.2) Fractus's litigation arguments take the position that "*4G communication standard*" is met by LTE and an "*antenna… configured to… receive signals employing/from a 4G communication standard*" is met by an antenna covering LTE frequency bands. The prior art in Grounds 1 and 2 meet these "*4G*" terms under Fractus's arguments, so that there is no dispute over

~~CONFIDENTIAL - PROTECTIVE ORDER MATERIAL~~

the meaning of the "*4G*" terms that requires the Board's resolution in order to decide Grounds 1 or 2.

105. Ground 3 shows that the full scope of the genus "*4G communication standard*" is unsupported by the written description in the priority documents. This issue can also be decided under Fractus's litigation arguments, so that there is no dispute over the meaning of the "*4G*" terms that requires the Board's resolution to decide Ground 3.

106. Regardless, the relevant evidence on the meaning of the "*4G*" terms is explained below.

1. Intrinsic evidence

107. The written description never uses the term "*4G communication standard*." The '677 specification equates "4G standards" with "4G services" providing "4G features":

> A MFWD incorporating 3.5G or ***4G features*** (i.e., comprising 3G and other advanced services such as for instance HSDPA, WiBro, WiFi, WiMAX, UWB or other high-speed wireless standards, ***hereinafter 4G services***) might require operation in additional frequency bands corresponding to ***said 4G standards***[.]

EX1001, 25:1-6. The antecedent for "said 4G standards" (EX1001, 25:6) is "4G services," and the "frequency bands corresponding to said 4G standards" comprise "frequency bands of the 4G services[.]" *Id.*, 25:1-16. The patent defines a "4G

~~CONFIDENTIAL - PROTECTIVE ORDER MATERIAL~~

antenna" as an "antenna covering one or more of the 4G services[.]" EX1001, 25:22-24.

108. Thus, a POSA would have understood that "4G communication standard" is met by a "wireless standard" for "4G services" and an "*antenna… configured to*" (1) "support [a] frequency band[]… associated with a 4G communication standard"; (2) "receive signals employing a 4G communication standard"; or (3) transmit or "receive signals from a 4G communication standard" is met by an antenna that is operable in a frequency range used by a "4G service," where the "i.e." signal means that the patent defines a "4G service" as "comprising 3G and other advanced services such as for instance HSDPA, WiBro, WiFi, WiMAX, UWB or other high-speed wireless standards[.]" EX1001, 25:1-6.

2. Fractus's Litigation Arguments

109. In the ADT Litigation, Fractus argued that "antenna functions" for "*4G communication standard*" meant antenna "compatibility with HSDPA, WiFi, WMax [sic], WiBro, UWB, or other highspeed wireless standards" further including "second-generation (2G) mobile, IMT-2000, [and] wireless local area network (WLAN)" (EX1017, 19-20) while "communication standard" meant "technical specifications relating to mobile or radio communication systems, including but not limited to GSM, UMTS, CDMA, W-CDMA, and LTE." EX1017, 20 n.9; EX1018, 10 (¶36). Fractus also argued that "*receive signals from*

~~CONFIDENTIAL - PROTECTIVE ORDER MATERIAL~~

a 4G communication standard" meant "the antenna could interact with a signal sent by a Fourth generation cellular technology to obtain or receive electromagnetic energy." EX1017, 18 n.8 (cleaned up); EX1018, 10 (¶37).

110. In the Geotab Litigation, Fractus maps [1.d] "*frequency bands being associated with a 4G communication standard*" to LTE bands 2, 4, and 12. EX1024, 21 ('677 patent); EX1016, 3; EX1047, 3, 32, 37; EX1048, 3.

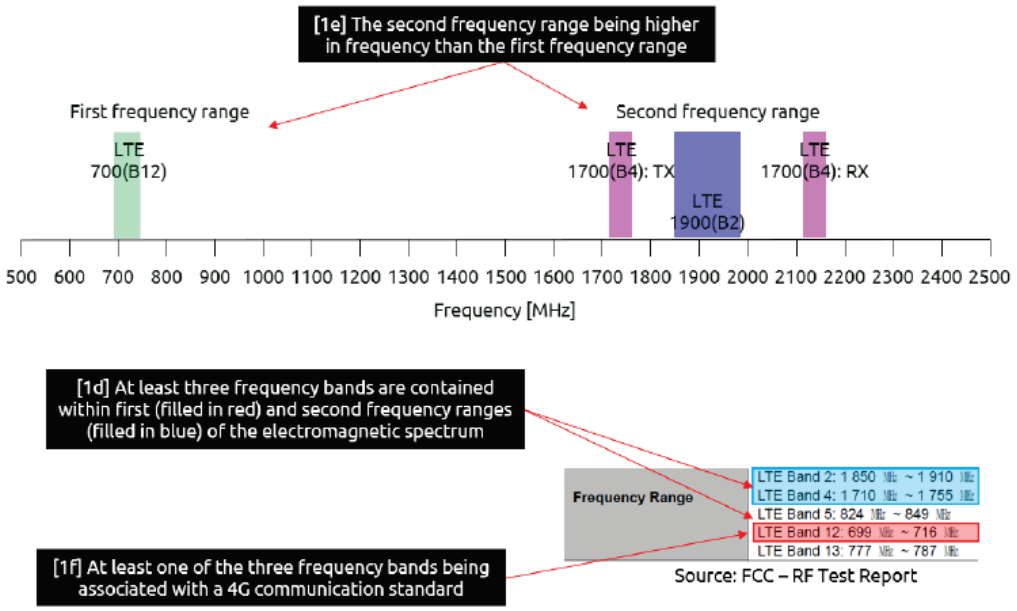

EX1024, 21.

111. Thus, Fractus takes the litigation position that that "*4G communication standard*" is met by LTE. LTE was "an evolution of 3G into an evolved radio access," meeting the ordinary meaning of "*4G communication standard*." EX1039, 3, 21-25. LTE is a "fourth generation cellular technology" so that an antenna that can send/receive signals using LTE meets Fractus's construction of "*receive signals from a 4G communication standard*" as "the

~~CONFIDENTIAL - PROTECTIVE ORDER MATERIAL~~

antenna could interact with a signal sent by a Fourth generation cellular technology to obtain or receive electromagnetic energy." EX1017, 18 n.8.

IX. GROUND 1: DOU+CIAIS-QUADBAND RENDERS OBVIOUS CLAIMS 1-9

A. Dou (EX1013)

112. Dou describes a wireless handheld device with an internal diversity antenna architecture for wireless devices such as, e.g., a handheld computer, mobile telephone, personal digital assistant (PDA), or pager. Dou, Abstract, [0015]. Dou describes locating a first antenna substantially near the top—and a second antenna located substantially near the bottom—of a device housing and/or internal PCB. Dou, Figs. 2A, 3A, [0017], [0032].

113. Antenna diversity refers to the use of multiple antennas within a communication system to improve signal reliability and quality. A diversity architecture such as that described in Dou can be implemented in various forms: spatial diversity (using physically separated antennas), pattern diversity (using antennas with different radiation patterns), and/or polarization diversity (using orthogonally polarized elements). These architectures can mitigate the effects of multipath fading, a phenomenon where signal reflections cause destructive interference at the receiver. By receiving multiple versions of the same signal through independent channels, a diversity architecture can select or combine the strongest signal, significantly improving reception quality, reducing bit error rate,

~~CONFIDENTIAL - PROTECTIVE ORDER MATERIAL~~

and enhancing link robustness. Diversity is especially beneficial in mobile and indoor environments where signal conditions can change rapidly due to movement, obstruction, or reflection. Indeed, I worked with diversity architectures in my first position at Motorola using automotive cellular radio.

114. Dou describes using antennas tuned for operating at multiple frequency ranges associated with several different services including, e.g., GSM, PCS, WCDMA/UMTS, GPS, NAMPS, "WiFi," and Bluetooth. Dou, [0022]. The antennas "may be implemented using any type of suitable internal antenna" (Dou, [0028]) and can be of different types. Dou, [0034] (describing first antenna 206 comprising a "planar inverted-F antenna" (PIFA) while second antenna 208 "may comprise" any "other suitable antenna"). Dou's wireless device can include "an additional antenna" of "any suitable type… disposed within the housing[.]" Dou, [0040].

B. Ciais-Quadband (EX1009)

115. Ciais-Quadband discloses a "miniature multiband internal antenna" for "modern mobile handsets" that "covers"—i.e., can send and receive signals at—870-960 MHz with a VSWR [Voltage Standing Wave Ratio] "better than" (i.e., less than) 2.5:1 and at 1710-2170 MHz with a VSWR under 2.0:1. Ciais-Quadband, Fig. 3, 148-150. These VSWR levels are below the maximum VSWR levels that the '677 patent call a functional requirement for antennas at these

~~CONFIDENTIAL - PROTECTIVE ORDER MATERIAL~~

frequencies. EX1001, 37:8-37, Table 1 (specifying maximum VSWR 3.5:1 for 800-960 MHz, VSWR 3.0:1 for 1710-1990 MHz, and VSWR 2.5:1 for 1920-2170 MHz)

116. VSWR, or Voltage Standing Wave Ratio, is used to evaluate how efficiently an antenna is matched to the transmission line or system it is connected to—typically a coaxial cable and a radio transmitter or receiver. It is a dimensionless ratio that quantifies the amount of reflected power due to impedance mismatch between the antenna and the transmission line. When an RF signal is transmitted down a cable to an antenna, maximum power transfer occurs when the antenna's impedance matches the transmission line's characteristic impedance, often 50 ohms. If there is an impedance mismatch, some of the signal is reflected back toward the source, creating a standing wave pattern along the line.

117. VSWR is defined as: $VSWR = (1 + |\Gamma|) / (1 - |\Gamma|)$, where Γ is the reflection coefficient at the feed point and $|\Gamma|$ ranges from 0 (perfect match) to 1 (total reflection). VSWR values range among: 1.0:1 = perfect match (no reflection); < 2:1 = considered good for most applications (*see* Ciais-Quadband, Fig. 3, 148-150); > 3.5:1 = significant mismatch, poor efficiency. For example, Ciais-Quadband, Fig. 3 provides evidence of a multiband antenna with VSWR = 2 (i.e., ~11% reflected power) defining the edges of its cited bands.

~~CONFIDENTIAL - PROTECTIVE ORDER MATERIAL~~

C. Dou+Ciais-Quadband

118. While Dou describes a wireless handheld device having internally-mounted antennas, it does not describe particular antennas for implementing its wireless devices. Instead, Dou leaves the antenna selection to a POSA.

119. A POSA had reasons to implement each of Dou's first antenna 206 and second antenna 208, as shown in Dou Figures 2A-2B, as a Ciais quadband antenna. Ciais's quadband antenna was designed for internal use in mobile phones, making it suitable for use as Dou's "internal antenna" 206 and 208 "disposed within… housing 202 of the wireless device 200." Dou, [0018]; Ciais-Quadband, 148, 150.

120. Ciais's quadband antenna is a planar inverted-F antenna (PIFA) (Ciais-Quadband, Abstract), which Dou describes using for the first and second antennas. Dou, [0028]. Ciais's quadband antenna provided operation at 870-960 MHz and 1710-2170 MHz, each of which used well-known communication standards (GSM, DCS, PCS, UMTS), making the antenna "suitable for mobile phone applications" like Dou's wireless device. Ciais-Quadband, 148, 150; Dou, [0022] (describing exemplary coverage for GSM, PCS, and "WCDMA/UMTS" operations).

121. Dou describes its wireless device having "three or more antennas" that "may comprise any suitable type of internal antenna" (Dou, [0040]) and describes

~~CONFIDENTIAL - PROTECTIVE ORDER MATERIAL~~

the wireless device having an antenna covering frequencies for GPS (1575 MHz) or WiFi or Bluetooth using the ISM band at 2.4 GHz. Dou, [0022]. A POSA would have had reasons to include a GPS antenna and an antenna supporting WiFi and Bluetooth to provide the services that Dou describes, in frequency ranges Ciais's quadband antenna did not cover.

122. The resulting combination has four antennas: antennas 206 and 208, a GPS antenna, and a 2.4 GHz antenna for WiFi/Bluetooth.

123. Providing GPS and WiFi/Bluetooth antennas in a mobile device was conventional. EX1029, Fig. 9 (below), [0044] (GPS antenna **64**, WLAN antenna **61**, Bluetooth antenna **66**).

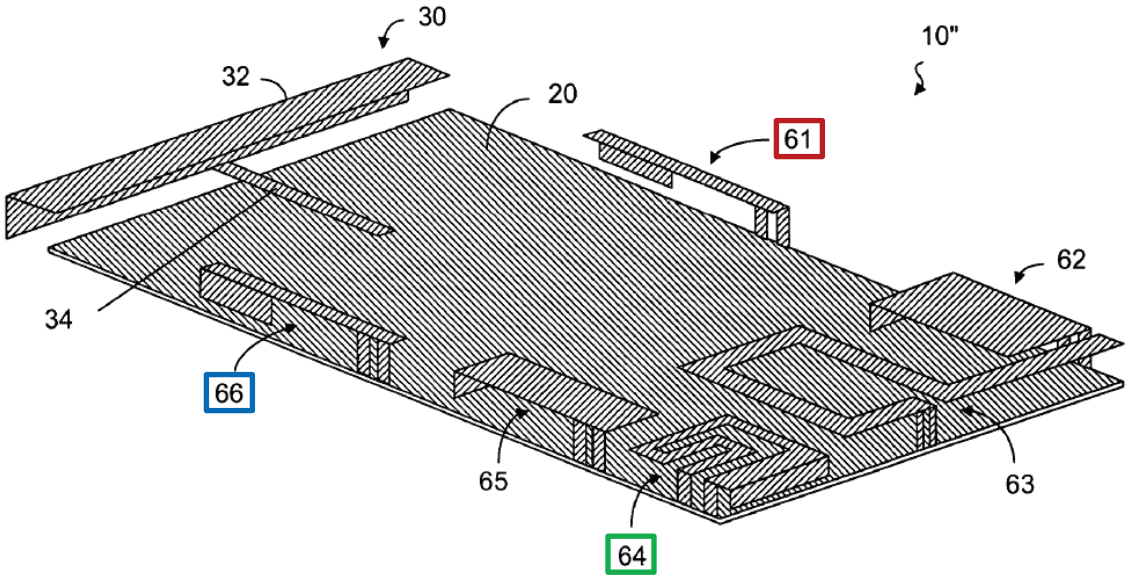

FIG. 9

124. Implementing Dou's wireless device with Dou's first antenna 206 and second antenna 208 each provided by a separate Ciais quadband antenna would

~~CONFIDENTIAL - PROTECTIVE ORDER MATERIAL~~

have been nothing more than combining familiar elements according to known methods with predictable results, and been no more than the predictable use of prior art elements according to their established functions.

125. The same is true of adding an antenna for GPS and another for WiFi and Bluetooth to Dou's device to provide the multiband coverage that Dou describes, which would also have been nothing more than combining familiar elements according to known methods with predictable results, and been no more than the predictable use of prior art elements according to their established functions.

126. A POSA would have had a reasonable expectation of success using Ciais's quadband antenna in Dou's wireless device because Ciais designed the quadband antenna for internal use in cellular telephones (Ciais-Quadband, 148, 150), and Dou expressly contemplates using a multiband PIFA antenna—like the Ciais quadband antenna—as its first and second internal antennas (e.g., Dou, [0028]-[0029]).

127. Dou describes antenna placement within the device according to "various performance and design constraints" known to a POSA. Dou, [0030]; Ciais describes placing the quadband antenna at the end of a PCB "on the corner of a ground plane" where Dou places its antennas 206 and 208. Ciais-Quadband, Fig. 1, 148; Dou, Figs. 2A-2B, [0029]. It was well-within the POSA's ordinary skill to

~~CONFIDENTIAL - PROTECTIVE ORDER MATERIAL~~

implement Dou's wireless device with Ciais's quadband antenna, and the resulting antenna operation was predictable. Dou, [0012], [0063].

128. A POSA also would have had a reasonable expectation of success including an antenna covering GPS and another covering WiFi and Bluetooth in Dou's wireless device—as Dou describes—because it was conventional (EX1029, [0044]), Dou explains that "the antenna architecture may comprise three or more antennas" (Dou, [0040]), and Dou specifically describes the wireless device having coverage including for GPS and WiFi and Bluetooth (Dou, [0022]).

129. I refer to this combination as "Dou+Ciais-Quadband."

D. Claim 1

1. Preamble [1.PRE]

1.PRE	A wireless device comprising:

130. Dou+Ciais-Quadband meets [1.PRE] because Dou's modified device is a wireless device like a handheld computer, mobile telephone, or PDA. Dou, [0015]-[0016], claim 1.

2. Limitation [1.a]

1.a	an antenna system comprising:

131. Dou+Ciais-Quadband meets [1.a] because Dou's antenna system, with Ciais's quadband antenna implementing Dou's antenna 206 and 208, meets Limitations [1.b]-[1.h] as shown below. Dou, [0014], [0017] ("internal diversity

~~CONFIDENTIAL - PROTECTIVE ORDER MATERIAL~~

antenna architecture comprising a first antenna 206 and a second antenna 208 disposed on… PCB 204").

3. Limitation [1.b]

1.b	a ground plane;

132. Dou+Ciais-Quadband meets [1.b] because it uses Dou's ground plane 210 to implement Ciais's ground plane teaching. Dou, Fig. 2B, [0029]; Ciais-Quadband, 148, 150, Fig. 1(a).

4. Limitation [1.c]

1.c	a first antenna within the wireless device and configured to support at least three frequency bands contained within first and second frequency ranges of the electromagnetic spectrum,

133. As instructed by Petitioners' counsel I treat the plain meaning of "*at least three frequency bands contained within the first and second frequency ranges*" as the first and second frequency ranges together contain within them "*at least three frequency bands*." This is also how Fractus construes the same language in its litigation arguments. EX1024, 21 (detail below).

~~CONFIDENTIAL - PROTECTIVE ORDER MATERIAL~~

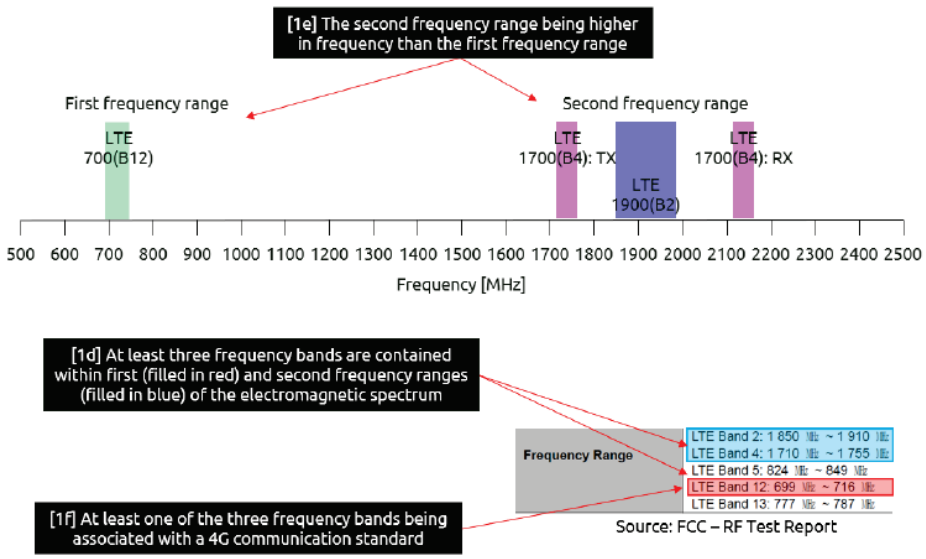

134. Dou+Ciais-Quadband meets [1.c] because it implements Dou's antenna 206, within the wireless device housing, using Ciais's quadband antenna ("first antenna"). *Supra* §IX.C (combination); Dou, [0017].

135. Ciais's quadband antenna covers—i.e., is capable of sending and receiving electromagnetic radiation at ("*configured to support*")—**870-960 MHz** and **1710-2170 MHz** (e.g., "*first and second frequency ranges of the electromagnetic spectrum*"). Ciais-Quadband, Fig. 3, 148-150; *supra* §IX.B (discussing Ciais-Quadband).

136. A POSA understood that a "*frequency band*" is a frequency range specified by a regulatory or standards body for a particular use, such as a type of wireless communication.

137. Ciais's quadband antenna supports "*frequency bands*" that are contained within the antenna's supported frequency ranges. Although Ciais

~~CONFIDENTIAL - PROTECTIVE ORDER MATERIAL~~

describes its antenna as "quad-band" (Ciais-Quadband, 148), the antenna is "*configured to support*" at least twenty-five (25) frequency bands "*contained within*" the frequency ranges it supports.

138. The **870-960 MHz** range ("*first frequency range*") contains at least ***four*** "*frequency bands*" shown in Table 1.

Table 1: Frequency bands within 870-960 MHz.

Band	Range (MHz)
standard GSM900	890-960
extended GSM900	880-960
ISM	902-928
LTE Band 8	880-960

EX1030, 8-9 ("Standard or primary" and "Extended" "GSM 900 band"); EX1001, 10:14-23 (discussing ISM 902-928 MHz); EX1025, 13, Table 5.5-1 ("E-UTRA operating bands"); EX1026, 11 (listing LTE FDD and TDD bands); EX1039, 497-501.

139. The **1710-2170 MHz** range ("*second frequency range*") contains at least **twenty-one** "*frequency bands*" shown in Table 2.

~~CONFIDENTIAL - PROTECTIVE ORDER MATERIAL~~

Table 2: Frequency bands within 1710-2170 MHz.

Band	Range (MHz)
DCS1800	1710-1880
PCS1900	1850-1990
UMTS Band I	1920-2170
UMTS Band II	1880-1990
UMTS Band III	1710-1880
UMTS Band IV	1710-2155
UMTS Band a	1900-1920, 2010-2025
UMTS Band b	1850-1910, 1930-1990
UMTS Band c	1910-1930
LTE Band 1	1920-2170
LTE Band 2	1850-1990
LTE Band 3	1710-1880
LTE Band 4	1710-2155
LTE Band 9	1749.9-1879.9
LTE Band 10	1710-2170
LTE Band 33	1900-1920
LTE Band 34	2010-2025
LTE Band 35	1850-1910
LTE Band 36	1930-1990
LTE Band 37	1910-1930
LTE Band 39	1880-1920

Ciais-Quadband, 148 (DCS, PCS, UMTS); EX1030, 8-9 (DCS1800, PCS1900); EX1039, 139 (reference [100] identifies HSDPA specifications), 497-501, 599 (reference [100] is 3GPP TS 25.308 (EX1032)); EX1032 (UMTS HSDPA description); EX1035, 11-12 (UMTS standard comprises TS 25.101 (EX1033), 25.102 (EX1034), TS 25.308 (EX1032)); EX1033, 12-13 (Table 5.0 “UTRA FDD

~~CONFIDENTIAL - PROTECTIVE ORDER MATERIAL~~

frequency bands"); EX1034, 11 (UTRA/TDD frequency bands);[2] EX1025, 13, Table 5.5-1 ("E-UTRA operating bands" defining LTE bands); EX1026, 11 (listing LTE FDD and TDD bands).

a. UMTS background

140. As background, UMTS (Universal Mobile Telecommunications System) was a 3G mobile communication standard standardized by 3GPP as the successor to GSM. It introduced WCDMA (Wideband Code Division Multiple Access) as the radio access technology and featured both circuit-switched and packet-switched domains. HSDPA (High-Speed Downlink Packet Access) is an enhancement to UMTS introduced in 3GPP Release 5, often referred to as 3.5G (although the '677 regards it as 4G). It improves downlink speeds through advanced scheduling, adaptive modulation and coding, and Hybrid ARQ mechanisms. HSDPA is fully integrated into the UMTS framework and uses the same Node B (base station) and frequency bands.

141. Like LTE that followed it, UMTS typically operated in paired FDD bands, where uplink and downlink transmissions occur in separate frequency

[2] While Dou refers to "WCDMA/UMTS" in 1710-2170 MHz (Dou, [0022]), as shown in Table 2 the standard defines at least seven distinct "bands" within the 1710-2170 MHz frequency range.

~~CONFIDENTIAL - PROTECTIVE ORDER MATERIAL~~

ranges. For example, Band 1 uses 1920–1980 MHz for uplink and 2110–2170 MHz for downlink, with 190 MHz duplex spacing. EX1033, 12-13 (Table 5.0 "UTRA FDD frequency bands"). These paired bands allow simultaneous two-way communication using separate frequencies. Some UMTS deployments also use TDD (Time Division Duplexing), where uplink and downlink share the same frequency but are separated in time. EX1034, 11 (UTRA/TDD frequency bands).

b. LTE background

142. As background, 3GPP Release 8 ("LTE") replaced older circuit-switched architectures with a flat, packet-based core network called the Evolved Packet Core (EPC). The radio access component, known as Evolved-UTRA (E-UTRA), introduced a new air interface using OFDMA in the downlink and SC-FDMA in the uplink, offering improved spectral efficiency, higher throughput, and scalable bandwidths.

143. The LTE architecture includes E-UTRAN, composed of base stations (eNodeBs) that communicate directly with user equipment (UE). LTE does away with traditional circuit-switched voice, instead handling all services over IP. The 3GPP specifications define physical layer, RF requirements, and network interfaces across multiple documents (e.g., TS 36.101, 36.211). E-UTRA was designed as an evolution of UMTS, and even in 2006 it was widely understood by

~~CONFIDENTIAL - PROTECTIVE ORDER MATERIAL~~

a POSA to be the basis for the upcoming 4G systems, despite the formal ITU definition of 4G arriving later.

144. LTE typically uses Frequency Division Duplexing (FDD), which separates uplink and downlink transmissions into distinct frequency sub-bands. These bands are quoted with full frequency ranges for both uplink and downlink (e.g., Band 3: 1710–1785 MHz UL, 1805–1880 MHz DL) to ensure device compatibility, regulatory compliance, and efficient spectrum planning. EX1039, 497-502. Devices must support both sub-bands in hardware, and the duplex spacing impacts filter design, duplexers, and interference management. Some LTE bands use Time Division Duplexing (TDD), sharing a single frequency band across time-separated uplink and downlink slots.

145. Thus, the Ciais-Quadband antenna is "configured to support at least three frequency bands contained within first and second frequency ranges of the electromagnetic spectrum" because it supports (e.g., is operable to send and receive radiation in) at least four bands in the first frequency range and at least twenty-one bands in the second frequency range, meeting [1.c].

~~CONFIDENTIAL - PROTECTIVE ORDER MATERIAL~~

5. Limitation [1.d]

1.d	the second frequency range being higher in frequency than the first frequency range and at least one of the three frequency bands being associated with a 4G communication standard,

146. Dou+Ciais-Quadband meets [1.d] because its *second frequency range* (1710-2170 MHz) is "*higher in frequency*" than its "*first frequency range*" (870-960 MHz) and because as shown below, "*at least* one" of the at least twenty-five (25) supported frequency bands (*supra* §IX.D.4 ([1.c]) is "*associated with a 4G communication standard*." The band associated with a 4G standard is met by Dou+Ciais-Quadband in any of multiple ways.

147. ***First***, the Ciais-Quadband antenna supports at least seven (7) UMTS frequency bands, each of which is "*associated with a 4G communication standard*" at least because they support HSDPA. *Supra* §IX.D.4 ([1.c]), Table 2.

148. HSDPA is part of the Universal Mobile Telecommunications System (UMTS) and supported by the UMTS frequency bands. EX1039, 139, 599 (EX1032 identifies HSDPA specification); EX1032 (UMTS HSDPA description); EX1035, 11 (UMTS standard comprises 3GPP TS 25.101 (EX1033), 25.102 (EX1034)), 12 (UMTS standard comprises 3GPP TS 25.308 (EX1032)).

149. The '677 patent expressly defines HSDPA as a "4G feature" and "4G service" that it equates with a "4G standard." EX1001, 25:1-6; *supra* §VIII.G (claim construction).

~~CONFIDENTIAL - PROTECTIVE ORDER MATERIAL~~

150. ***Second***, the ISM band at 902-928 MHz, which Ciais's quadband antenna covers, is "*associated with a 4G communication standard*." Supra §IX.D.4 ([1.c]), Table 1.

151. The '677 patent expressly identifies "WiFi, WiMAX, WiBro, UWB or other high-speed wireless standards" as "4G services." EX1001, 25:1-4. As the '677 patent recognizes, Zigbee is a "high-speed wireless standard" for wireless networking like WiFi, Bluetooth, and UWB. EX1031, 17-18 (Zigbee uses IEEE Std. 802.15.4 wireless networking layers, provides wireless peer-to-peer communication in mesh networks), 31; EX1001, 10:14-23, 25:1-4. Zigbee is thus a "*4G communication standard*" because it is a "wireless standard" for "4G services" (*supra* §VIII.G).

152. Zigbee uses the ISM band at 902-928 MHz. EX1031, 17 (IEEE 802.15.4-2003, PHY layer 915 MHz), 18, Fig. 1 (same), 70 (Table 23)

153. ***Third*****,** as explained *supra* §VIII.G.2, Fractus argues in litigation that [1.d] is met by LTE bands. E.g., EX1024, 21 (excerpt below); EX1039, 497-502 (describing LTE frequency bands).

~~CONFIDENTIAL - PROTECTIVE ORDER MATERIAL~~

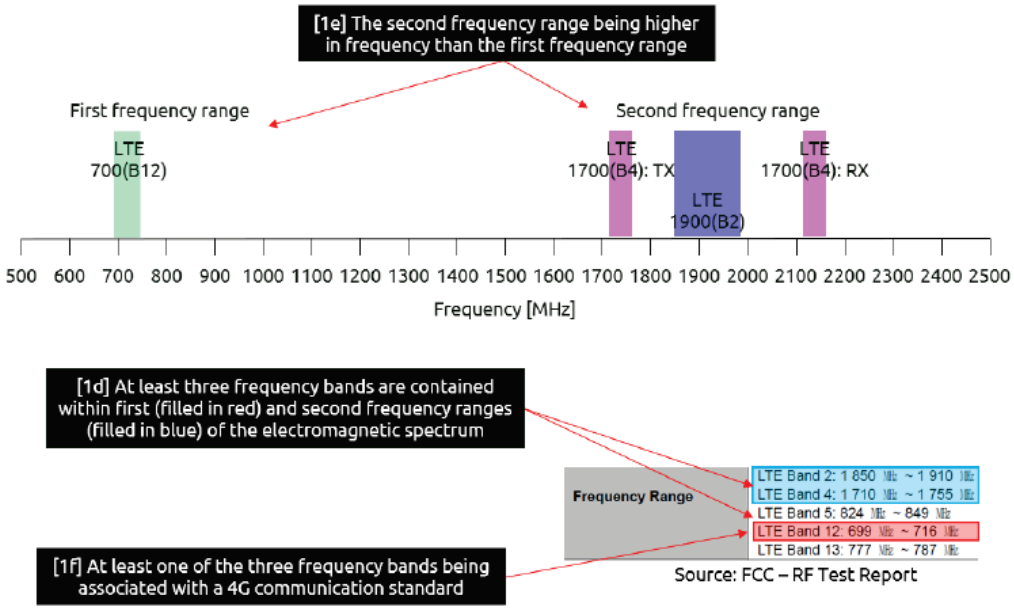

EX1024, 21.

154. The thirteen (13) LTE bands covered by Ciais's antenna—including LTE bands 2 and 4 whose uplink portions Fractus expressly identifies in litigation—are each "*associated with a 4G communication standard*". *Supra* §§VIII.G.2, IX.D.4 ([1.c]), Tables 1, 2.

6. Limitation [1.e]

1.e	the first antenna being proximate to a first short side of a ground plane rectangle enclosing the ground plane and defining a first antenna contour comprising an entire perimeter of the first antenna,

155. Dou+Ciais-Quadband meets [1.e] because it implements Dou's teaching to dispose antenna 206 (first antenna) at the top of PCB 204. Dou, Fig. 2A, [0016]-[0017].

~~CONFIDENTIAL - PROTECTIVE ORDER MATERIAL~~

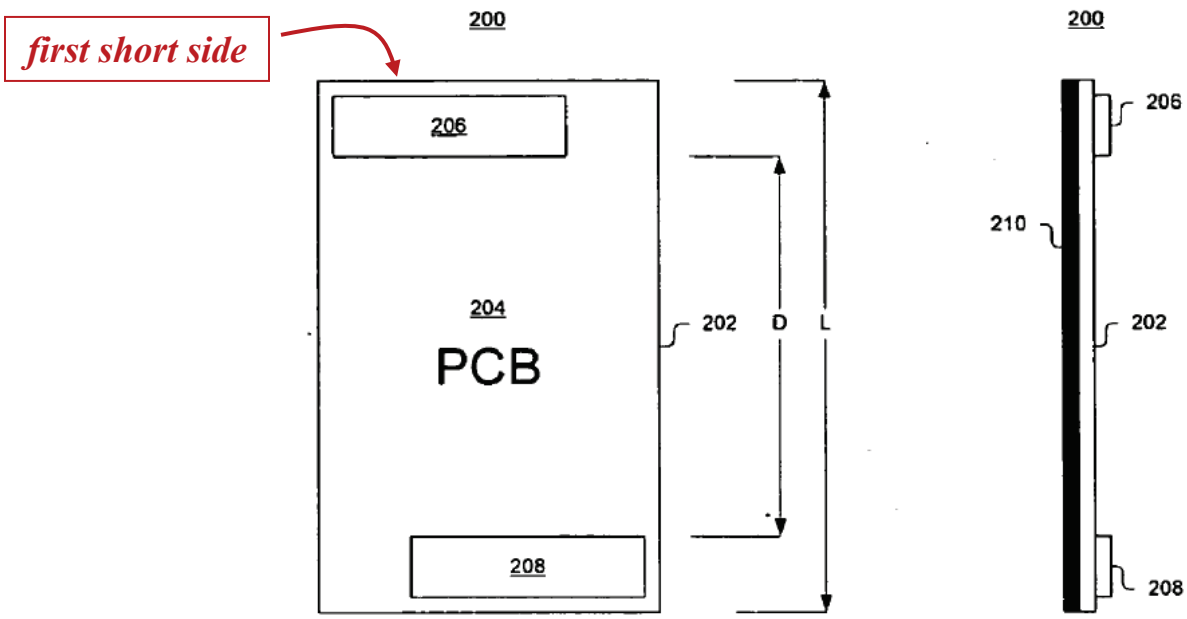

FIG. 2A FIG. 2B

156. PCB 204's rectangular area defines a rectangle ("*ground plane rectangle*") that "*enclos[es]*" the ground plane 210 disposed on the side of the PCB opposite from antenna 206. Dou, Figs. 2A-2B, [0016]-[0017], [0029].

157. Ciais teaches a rectangular (40.5 mm x 105 mm) PCB, also backed by a ground plane, that Ciais explains is representative of PCBs for typical mobile phones. Ciais-Quadband, Fig. 1, 148. The top/shorter edge of PCB 204 is a "*first short side*." Disposing antenna 206 at the top of the PCB (as taught by Dou) places it "*proximate to a first short side of a ground plane rectangle*" defined by the PCB area. Dou, Figs. 2A-2B (annotated above), [0016]-[0017], [0029].

158. A POSA would have understood that "entire perimeter" is met by the perimeter of disjoint segments comprising the antenna contour. EX1001, 33:50-

~~CONFIDENTIAL - PROTECTIVE ORDER MATERIAL~~

59, Fig. 12A (contour comprises combination of perimeter of elements 1201 and 1202).

159. As noted above, §VIII.C (claim construction of "*antenna rectangle*"), the '677 patent defines an "antenna rectangle" as "the orthogonal projection of the antenna box along the normal to the face with largest area of the antenna box." EX1001, 27:7-10.

160. The Ciais quadband antenna (*first antenna*, *supra* §IX.D.4 ([1.c])) has a planar "main patch" over vertical elements and a 1.2mm long "capacitive load." Ciais-Quadband, Fig. 1(a). The main patch has the antenna elements comprising the "largest area" of any surface of a box enclosing the quadband antenna.

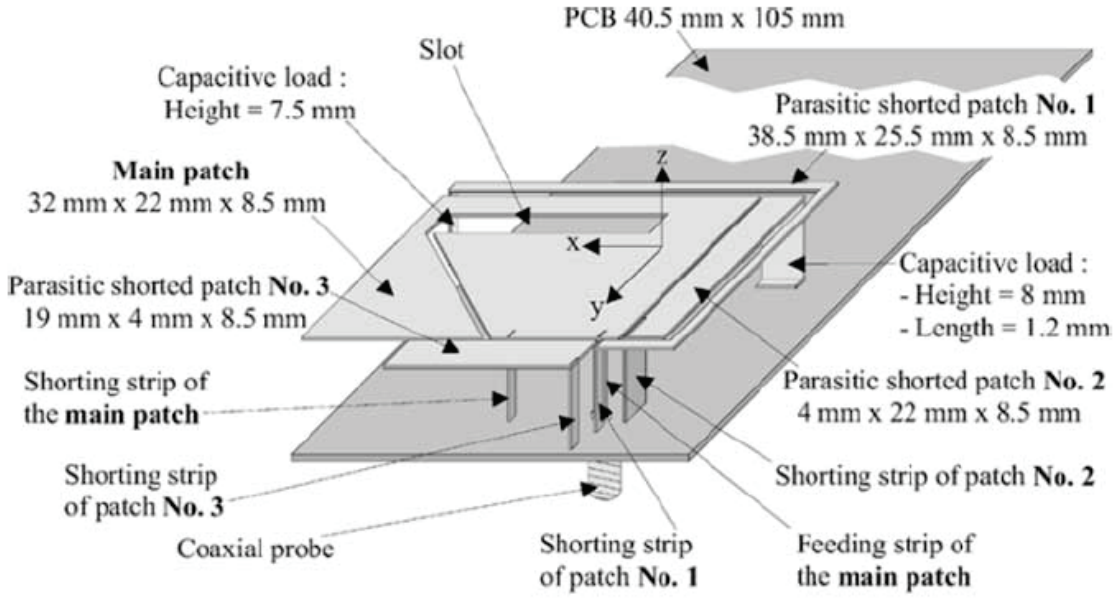

(a)

~~CONFIDENTIAL - PROTECTIVE ORDER MATERIAL~~

161. The minimum rectangle enclosing an orthogonal projection of the Ciais quadband antenna ("*antenna rectangle*") through the main patch is 38.5 mm × 28.5 mm. Ciais-Quadband, Fig. 1(b), 149; *supra* §VIII.C (claim construction).

162. Parasitic shorted patches No. 1-3, are in the same plane as the main patch at least because "the separation distance" "between **all patches** and the PCB" is 8.5 mm—meaning that they are all the same height from the top PCB surface. Ciais-Quadband, Fig. 1(b), 148.

163. Ciais's top planar view in Figure 1(b) (annotated below) shows the *antenna contour* (blue outline) bounded by the *antenna rectangle* (purple outline) including "disjoint[ed] segments" from orthogonal projection of the vertical feed and shorting strips and the planar 4 mm × 1.2 mm "capacitive load" segment near the PCB surface. *Supra* §VIII.D (claim construction); EX1001, 15:6-16.

~~CONFIDENTIAL - PROTECTIVE ORDER MATERIAL~~

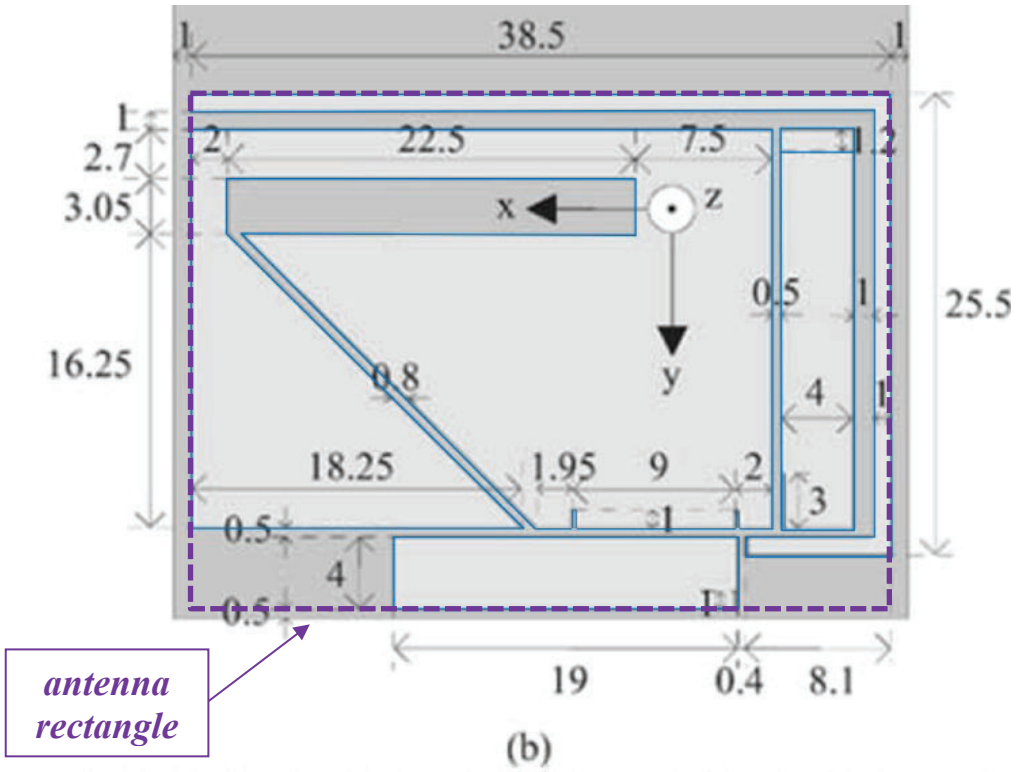

164. Ciais's quadband antenna thus "*defin[es] a first antenna contour comprising an entire perimeter of the first antenna*" just like the perimeter of antenna contour 350 in the '677 patent's embodiments in Figure 3 or antenna system 1200 in Figure 12A (below right), meeting [1.e]. EX1001, 7:1-2, 7:53-55, 27:44-28:8, 33:50-63; *supra* §§VIII.A (*perimeter*), VIII.D (*antenna contour*).

~~CONFIDENTIAL - PROTECTIVE ORDER MATERIAL~~

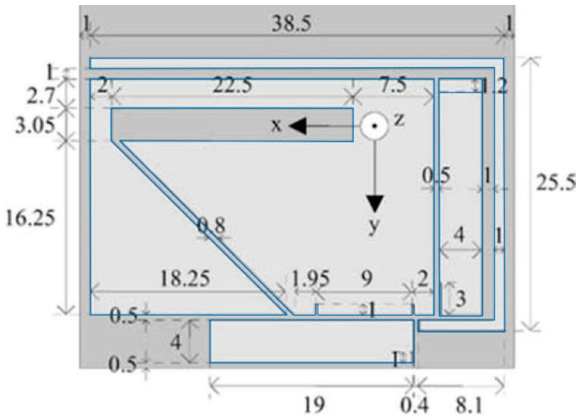

(b)

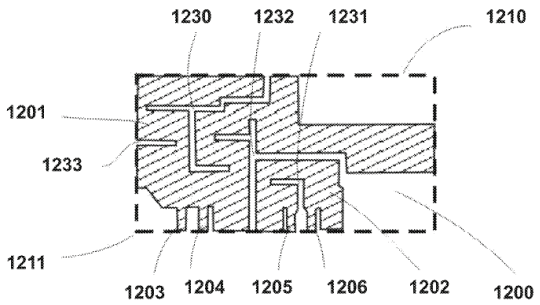

FIG. 12A

165. Following the ’677 patent’s usage (e.g., Figs. 12A, 13A), the below figure shows the Ciais quadband antenna contour with slant fill marking the main patch conductive elements bounded by the *antenna contour*. As explained below, this contour replicates Ciais’s reported antenna element dimensions.

~~CONFIDENTIAL - PROTECTIVE ORDER MATERIAL~~

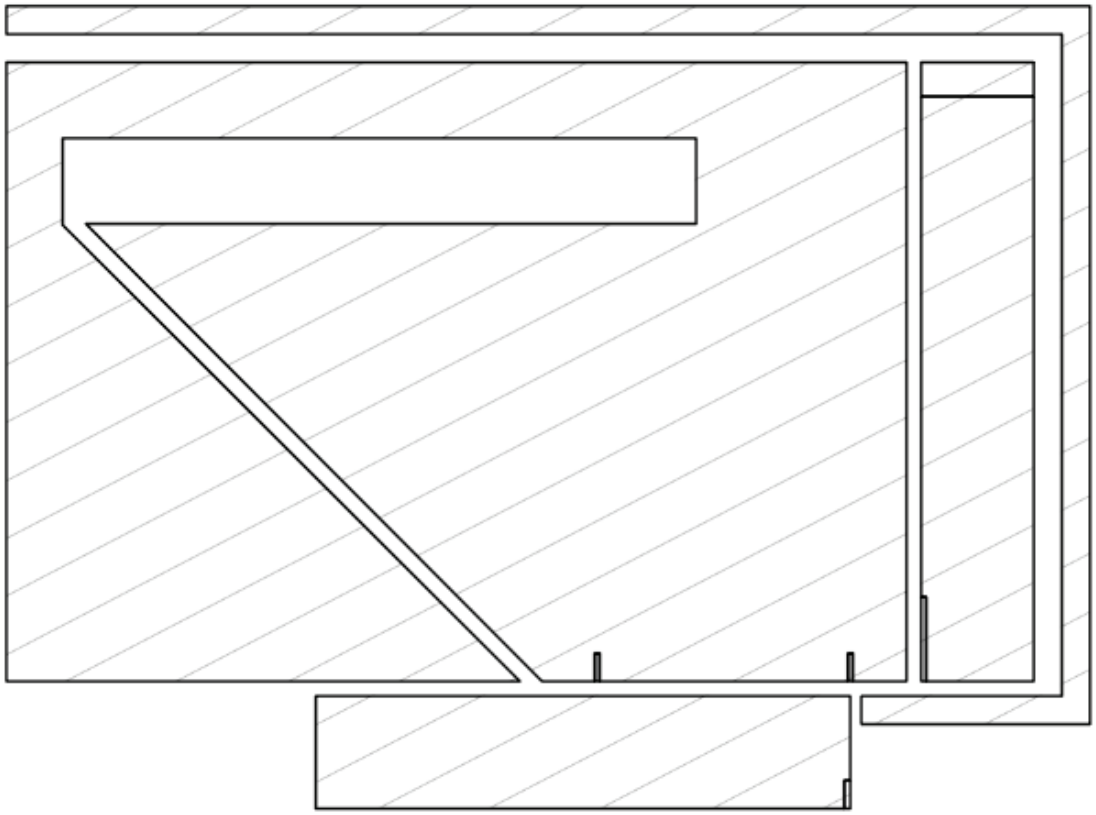

Ciais's quadband antenna contour

166. A properly scaled rendering of Ciais-Quadband's "antenna contour" can be generated using the dimensions provided in Fig. 1(b). Below I show a scaled rendering, alongside Fig. 1(b) for comparison.

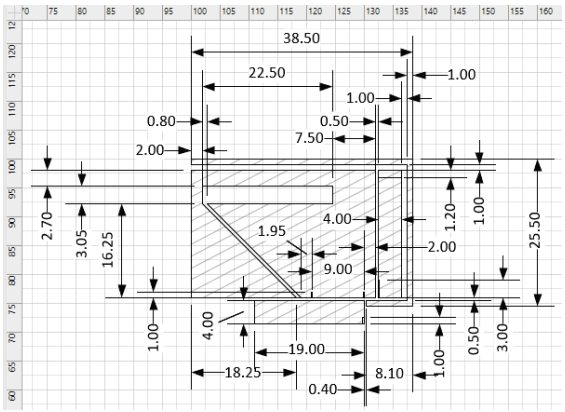

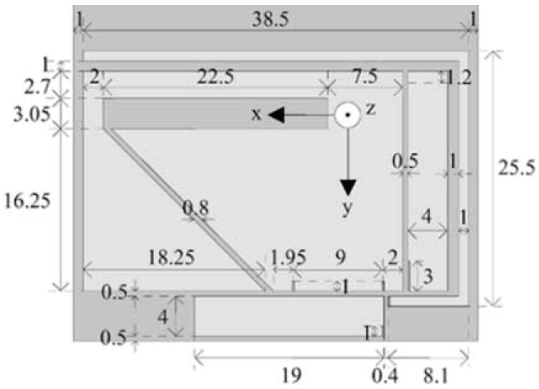

(b)

~~CONFIDENTIAL - PROTECTIVE ORDER MATERIAL~~

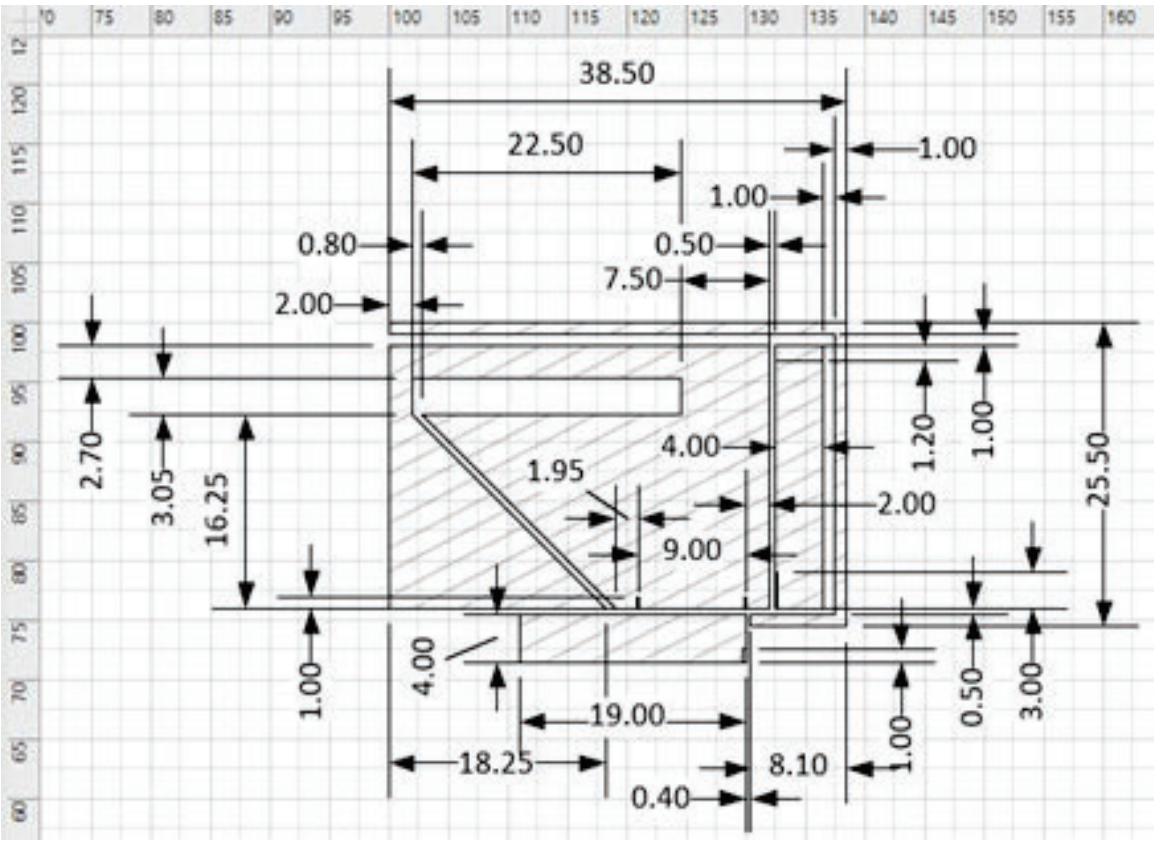

Ciais's quadband antenna contour segment dimensions

167. As I explained above at section VIII.D, the '677 patent expressly defines an "antenna contour" as "a set of joined and/or disjointed segments comprising" the perimeter of antenna elements in the antenna rectangle (*e.g.*, the main patch and the parasitic shorted patches No. 1-3), and orthogonal projection onto the antenna rectangle of perimeters of antenna elements disposed out of the plane of the surface of the antenna box that contains the largest area of antenna surfaces.

168. Ciais's quadband antenna contour thus includes segments of its antenna elements in the main patch, and projections of parasitic shorted patches

~~CONFIDENTIAL - PROTECTIVE ORDER MATERIAL~~

and their shorting strips, capacitive loads, and a feeding strip, which I explain these with more detail in the following paragraphs. Segments corresponding to each of these features are included in the quadband antenna contour shown above.

169. Ciais's quadband antenna contour includes the perimeter of the main patch, as shown in red below. The main patch's dimensions are explicitly stated as "32 mm × 22 mm," with a height of 8.5 mm above the ground plane. Ciais-Quadband, Fig. 1(b), p. 148. In Figure 1(b), the length of the top edge is 2.00+22.50+7.50 = 32 mm; the length of the lower edge (including the 0.80 mm gap) is 18.25+0.80+1.95+9.00+2.00 = 32 mm; and the length of the left edge is 2.70+3.05+16.25 = 22 mm.

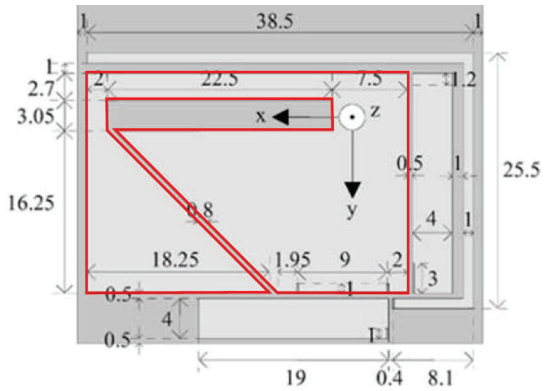

(b)

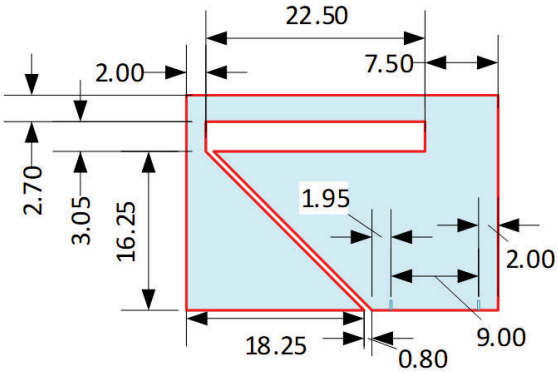

170. Ciais-Quadband's antenna contour includes the perimeter of parasitic shorted patch No. 2 and the projection of the perimeter of the lower horizontal portion. The perimeter of the parasitic shorted patch No. 2 is illustrated both in below left plot in red and in the below right excerpt of fig. 1(a). The dimensions of "Parasitic shorted patch No. 2" is "4 mm × 22 mm × 8.5 mm." A POSA would

~~CONFIDENTIAL - PROTECTIVE ORDER MATERIAL~~

understand that 4 mm refers to the width (segments A and C below) and 22 mm refers to the length (segments B and D below).

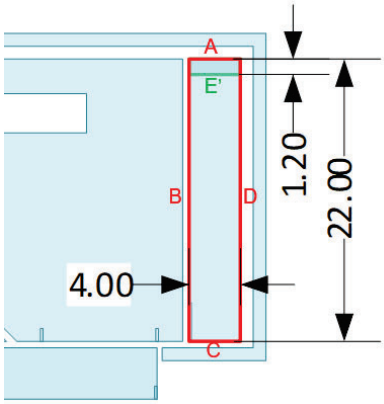

quadband antenna contour detail

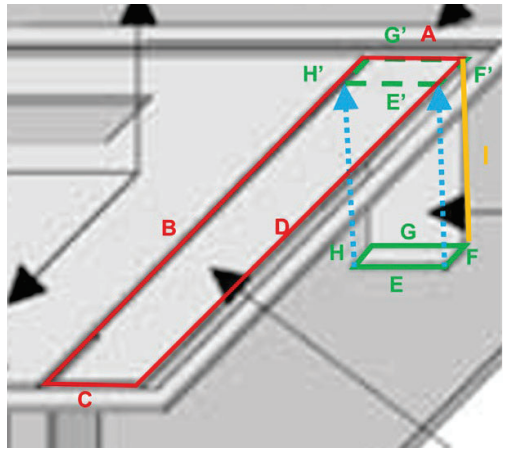

Ciais-Quadband, Fig.1(a) (annotated detail)

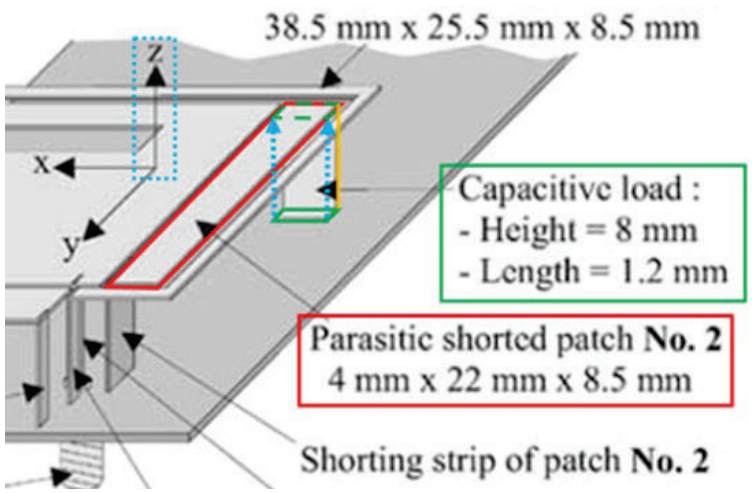

Ciais-Quadband, Fig.1(a) (annotated detail)

171. Ciais-Quadband's antenna contour also includes the perimeter of projections of capacitive load of parasitic shorted patch No. 2. As Ciais-Quadband explains, a capacitive load is "added to the parasitic patch[]… no. 2 by vertically folding their strip ends." Ciais-Quadband, at 149. In Fig. 1(a), the text "Capacitive load: Height = 8 mm[,] Length = 1.2 mm" (enclosed within a green

~~CONFIDENTIAL - PROTECTIVE ORDER MATERIAL~~

rectangular annotation) points to a vertical portion folded downwards from the patch No. 2 with the same color as patch No. 2.

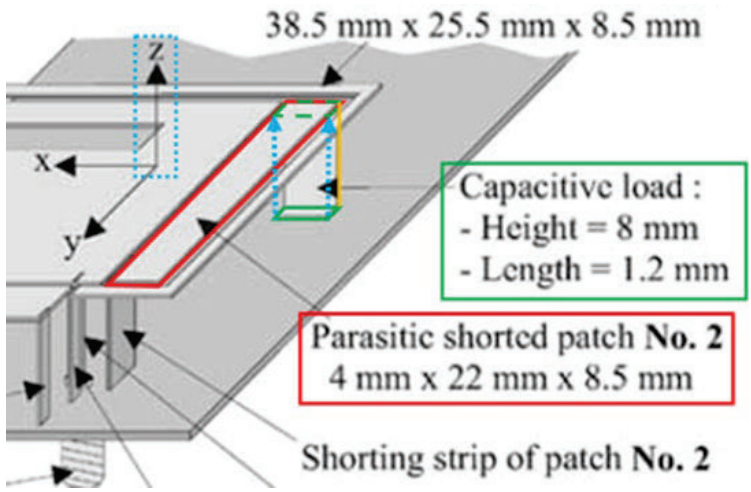

Ciais-Quadband, Fig.1(a) (annotated detail)

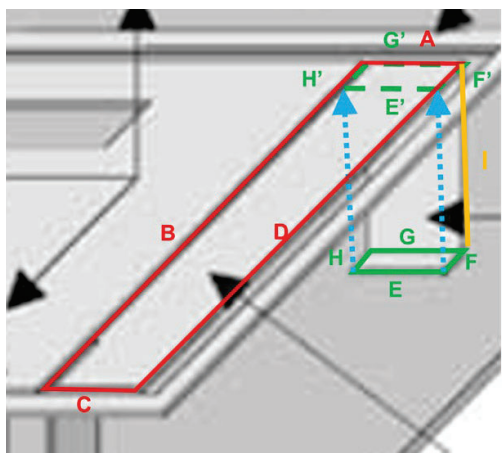

Ciais-Quadband, Fig.1(a) (annotated detail)

172. This vertical portion (with one of its vertical edge highlighted in orange) is part of the capacitive load added "by vertically folding" the patch No. 2. The capacitive load shares the same width as patch No. 2 because it's originally an extension from the patch No. 2 before folding. Therefore, G = A = 4 mm, and the

~~CONFIDENTIAL - PROTECTIVE ORDER MATERIAL~~

"Height = 8 mm" refers to the length of vertical edge (*e.g.*, edge I annotated in orange in the close-up below).

173. In addition to the vertical portion, the capacitive load of patch No. 2 includes an end portion horizontally folded (Figure 1(a)) from the bottom of the vertical portion, and deposed on the ground plane, parallel to the patch No. 2.

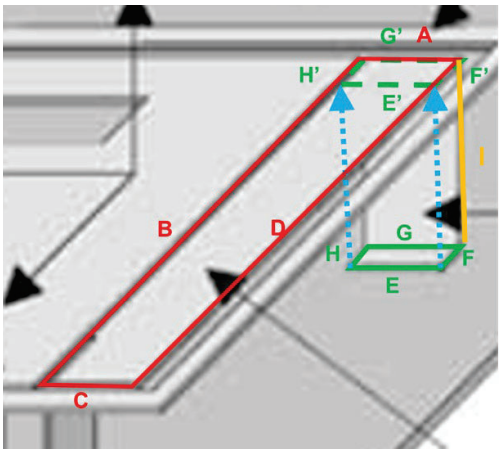

Ciais-Quadband, Fig.1(a) (annotated detail)

174. The four edges of this horizontal end portion are annotated with green solid lines and labeled "E," "F," "G," and "H" above. Ciais-Quadband's capacitive load "length = 1.2 mm" refers to the length of edges F and H, because the lengths of all other segments of the capacitive load are otherwise identified. Aggregating the physical lengths of patch no. 2 and its capacitive load, which is D+I+F = 22 + 8 + 1.2 = 31.2, and matches the paper's statement that the "[p]hysical length of elements no. 2" is "31.2 mm" and thus confirms that edges F and H are 1.2 mm long. Ciais-Quadband, 149.

~~CONFIDENTIAL - PROTECTIVE ORDER MATERIAL~~

175. In the detail below, green dashed lines mark the orthogonal projection of the end of the end portion of the capacitive load of patch No.2 onto the antenna rectangle.

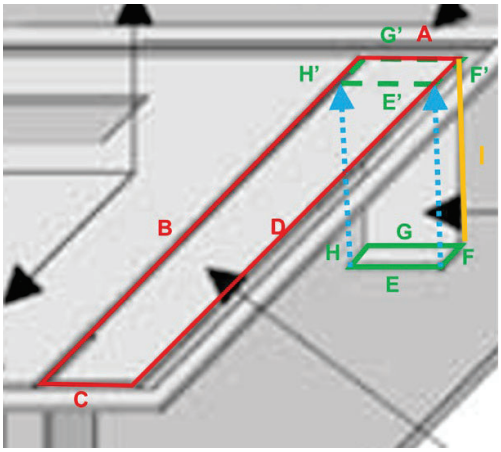

Ciais-Quadband, Fig.1(a) (annotated detail)

176. The projection is orthogonal because the direction of the projection is along the z direction that annotated in blue, which is perpendicular to the plane of the antenna rectangle (i.e., the plane defined by x and y directions in FIG. 1(a)). The capacitive loads for patches No.1-No.3 are antenna elements that contribute to the antenna contour at least because they are parts of the "electrical lengths" and "physical lengths" of resonators of Ciais-Quadband antenna, which are designed to enable the antenna to work at desired frequencies, *e.g.*, by matching the total lengths of each resonator with "quarter-wavelengths" of a desired frequency. Ciais-Quadband, 149. Therefore, the perimeter of the capacitive load (including its end portion), is a perimeter of an antenna element. The antenna contour thus at least includes the orthogonal projection of the end portion as annotated with green

~~CONFIDENTIAL - PROTECTIVE ORDER MATERIAL~~

dashed line. For example, the antenna contour at least includes the segment E' shown below left.

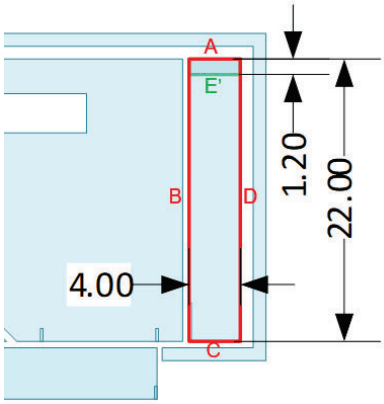

Ciais's quadband antenna contour (detail)

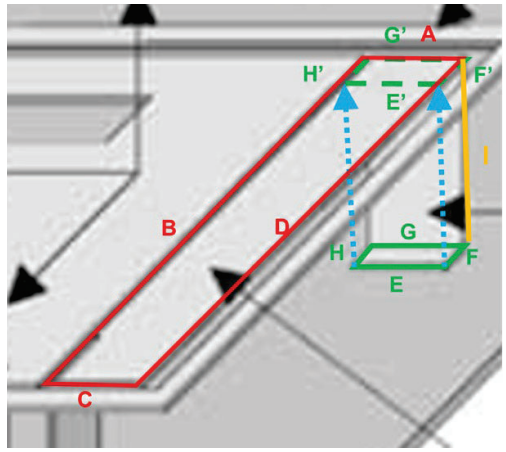

Ciais-Quadband, Fig.1(a) (annotated detail)

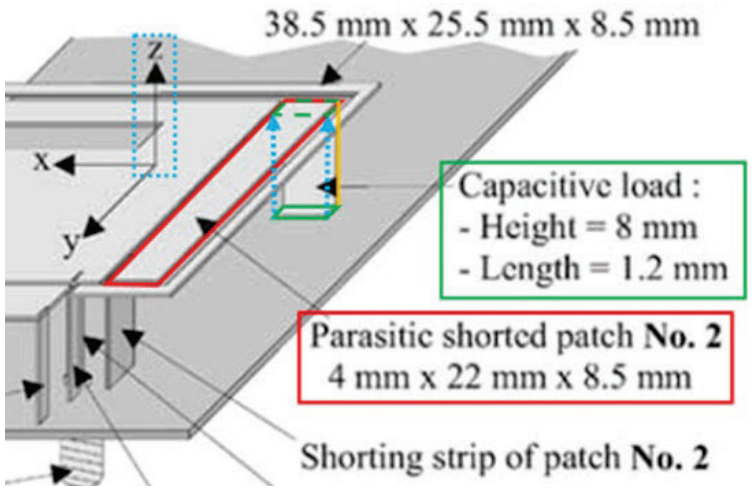

Annotated excerpt from Ciais-Quadband, Fig.1(a)

177. Ciais-Quadband's antenna contour includes the perimeter of a parasitic shorted patch No. 3. Figure 1(a) shows the dimensions of patch no. 3 are "19 mm × 4 mm × 8.5 mm." The portion co-planar with the main patch has dimensions 19 mm × 4 mm.

~~CONFIDENTIAL - PROTECTIVE ORDER MATERIAL~~

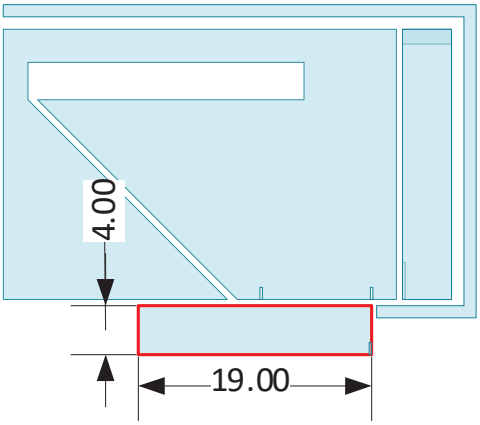

Quadband antenna contour

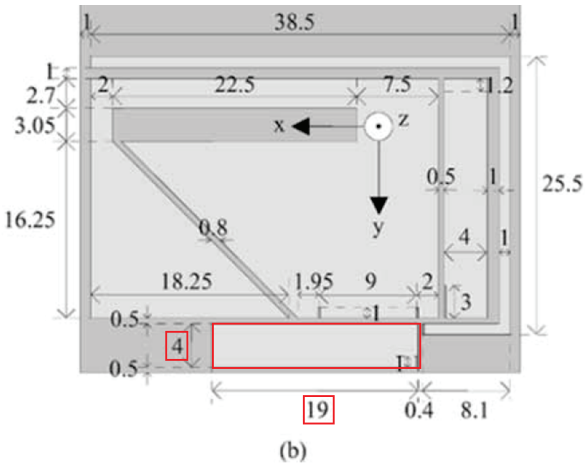

Ciais-Quadband, Fig.1(b) (annotated)

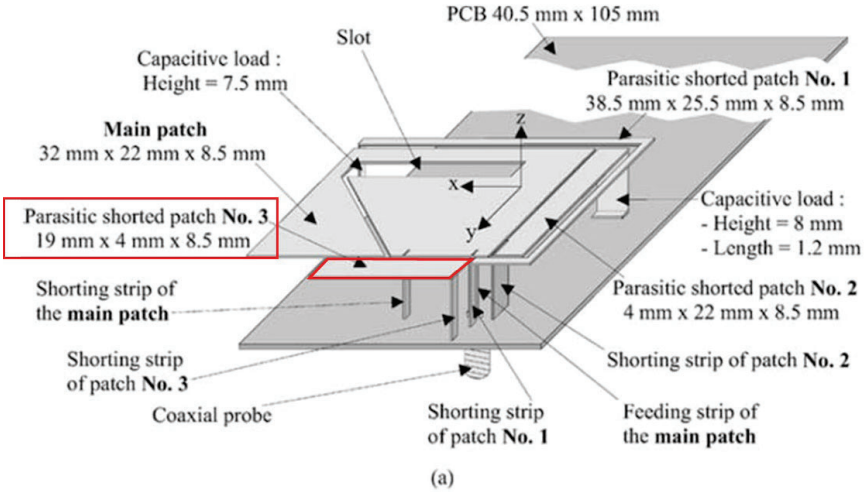

Ciais-Quadband, Fig.1(a) (annotated)

178. The quadband antenna contour includes the perimeter of parasitic shorted patch No. 1, having dimensions 38.5 mm × 25.5 mm × 8.5 mm. Ciais-Quadband, 148, Fig. 1(a). For convenience, I labeled the three arms of patch No. 3 with A, B, and C below. Figure 1(b) shows that arm A has a length of 38.5 mm; arm B has a length of 25.5 mm; arm C has a length of 8.1 mm; and each arm has width 1 mm.

~~CONFIDENTIAL - PROTECTIVE ORDER MATERIAL~~

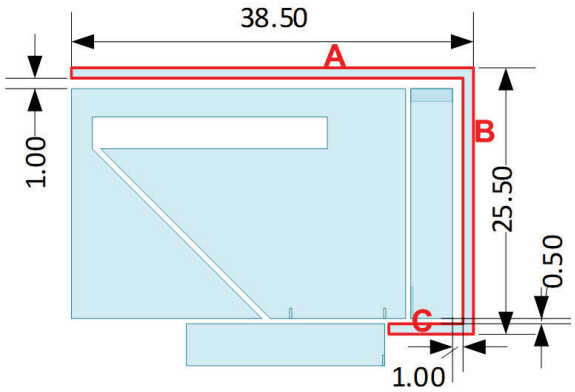

Quadband antenna contour

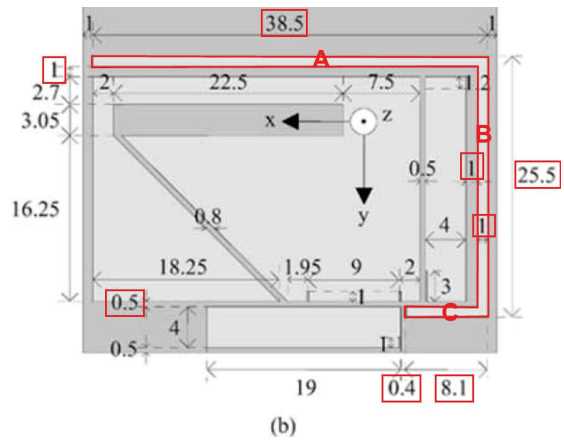

Ciais-Quadband, Fig.1(b) (annotated)

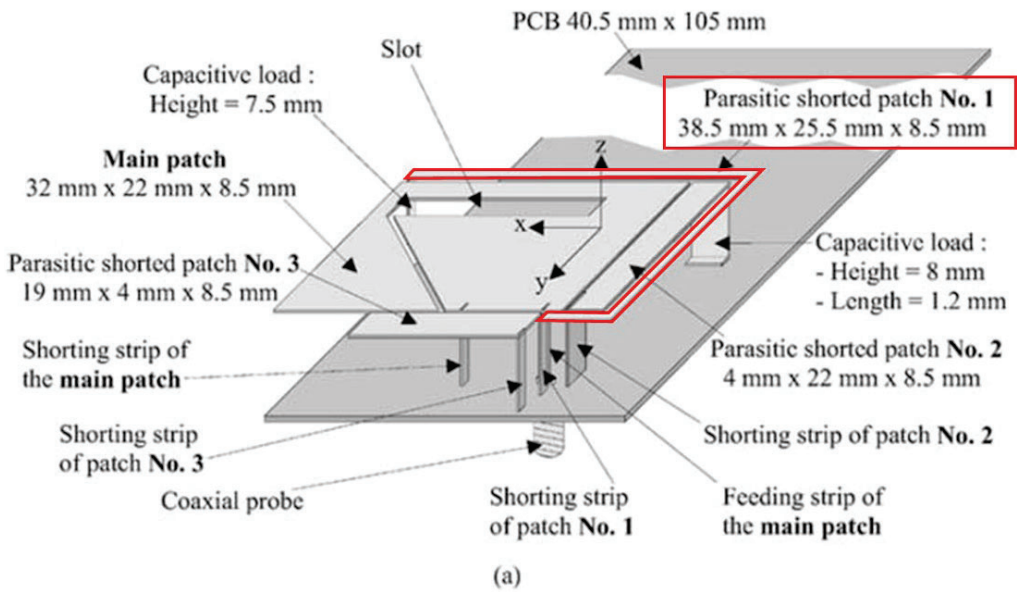

Ciais-Quadband, Fig.1(a) (annotated)

179. Figure 1(b) shows that the lower edge of arm A is placed 1 mm from upper edge of the main patch; the left edge of arm B is placed 1 mm from right edge of the parasitic patch No. 2; and the upper edge of arm C is placed 0.55 mm from the lower edge of parasitic patch No. 2.

~~CONFIDENTIAL - PROTECTIVE ORDER MATERIAL~~

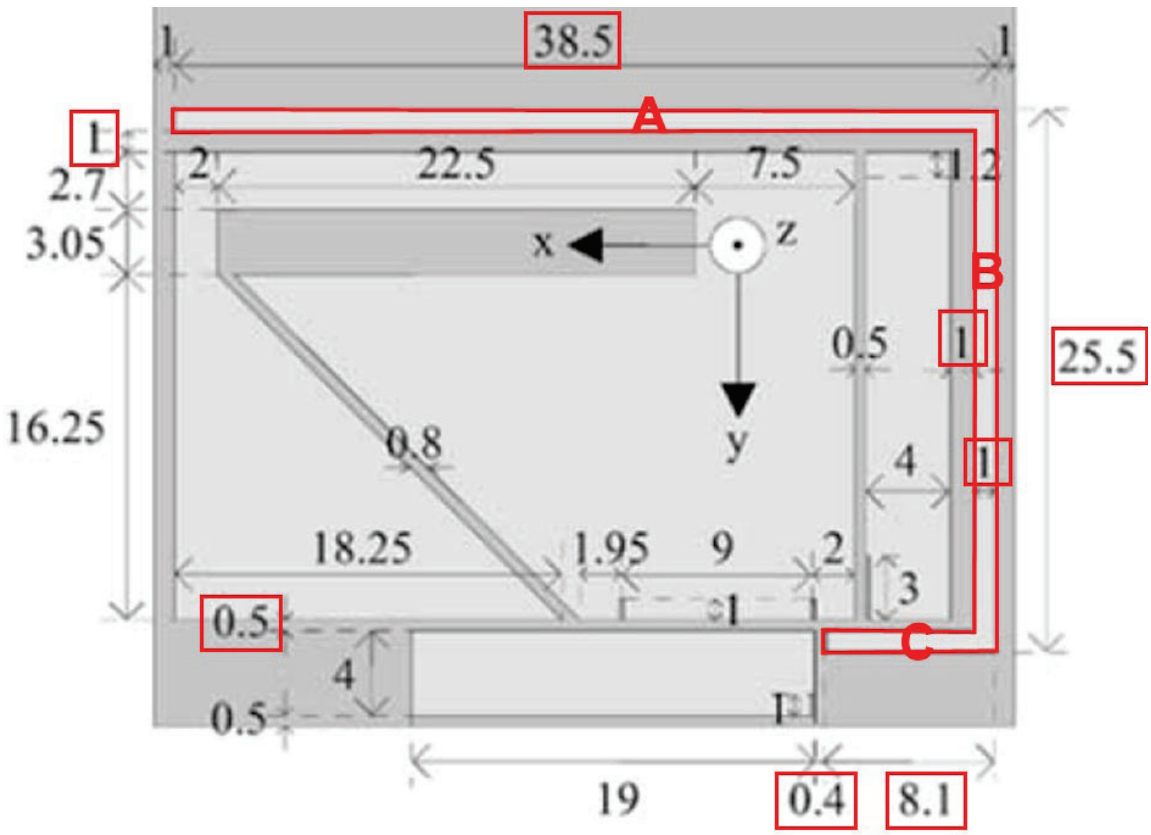

(b)

Ciais-Quadband, Fig.1(b) (annotated)

180. The quadband antenna contour includes the orthogonal projections of the shorting strips and the feeding strip as shown below.

181. The main patch has a shorting strip ("S0" below) and a feeding strip ("F0" below). Ciais-Quadband, Fig. 1(a). Parasitic shorted patch No. 2 has a shorting strip ("S2"), and parasitic shorted patch No. 3 has a shorting strip ("S3"). Ciais-Quadband, Fig. 1(a).

182. The strips are oriented in the vertical direction (i.e., z direction). Because these strips have physical dimensions, the orthogonal projection of these antenna elements results in antenna contour segments forming rectangles S0, S2,

~~CONFIDENTIAL - PROTECTIVE ORDER MATERIAL~~

S3, and F0 as shown in red below, wherein at least some segments do not overlap with segments from other antenna elements. The quadband antenna contour thus includes at least segments of orthogonal projections of these strips that I list in the below table.

Strip	Segment	Segment Length (mm)
S0	S01	1
S0	S02	about 0.2
S0	S03	1
F0	F01	1
F0	F02	about 0.2
F0	F03	1
S2	S21	3
S2	S22	about 0.2
S3	S31	1
S3	S32	about 0.2

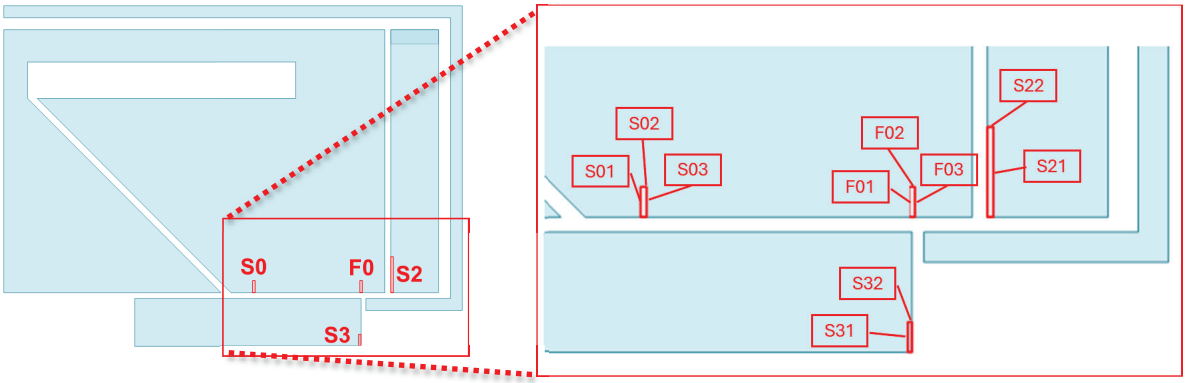

Quadband antenna contour

Quadband antenna contour (detail)

~~CONFIDENTIAL - PROTECTIVE ORDER MATERIAL~~

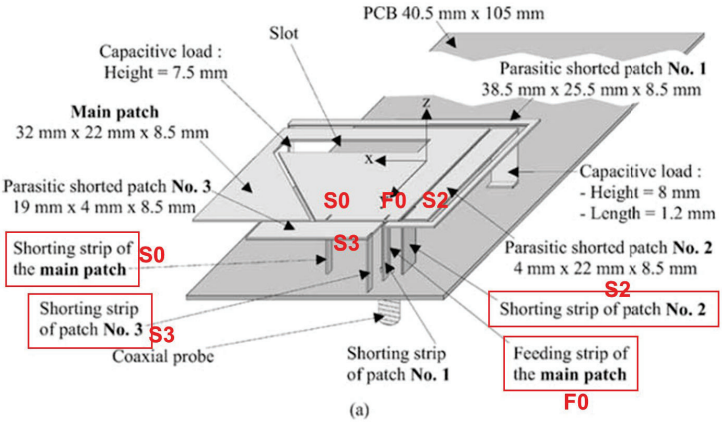

Ciais-Quadband, Fig.1(a) (Annotated)

183. Furthermore, EX1010 (Ciais-Multiband) is another Ciais paper that builds on the Ciais-Quadband antenna. While Ciais-Multiband modifies the Ciais-Quadband antenna by adding a slot (slot 2 below) to change various resonances, it preserves the same shorting and feeding strips as the Ciais-Quadband antenna. Ciais-Multiband shows shorting and feeding strip S0, S2, S3, and F0 having dimensions that are representative of those in Ciais-Quadband paper. Ciais-Multiband states "The antenna presented in this Letter is based on the quad-band structure reported in [Ciais-Quadband]," and explained its goal was "to achieve the tuning of its higher order resonances in the WLAN band" rather than changing the existing resonances in other bands of the Ciais-Quadband antenna. Ciais-Multiband, 920.

~~CONFIDENTIAL - PROTECTIVE ORDER MATERIAL~~

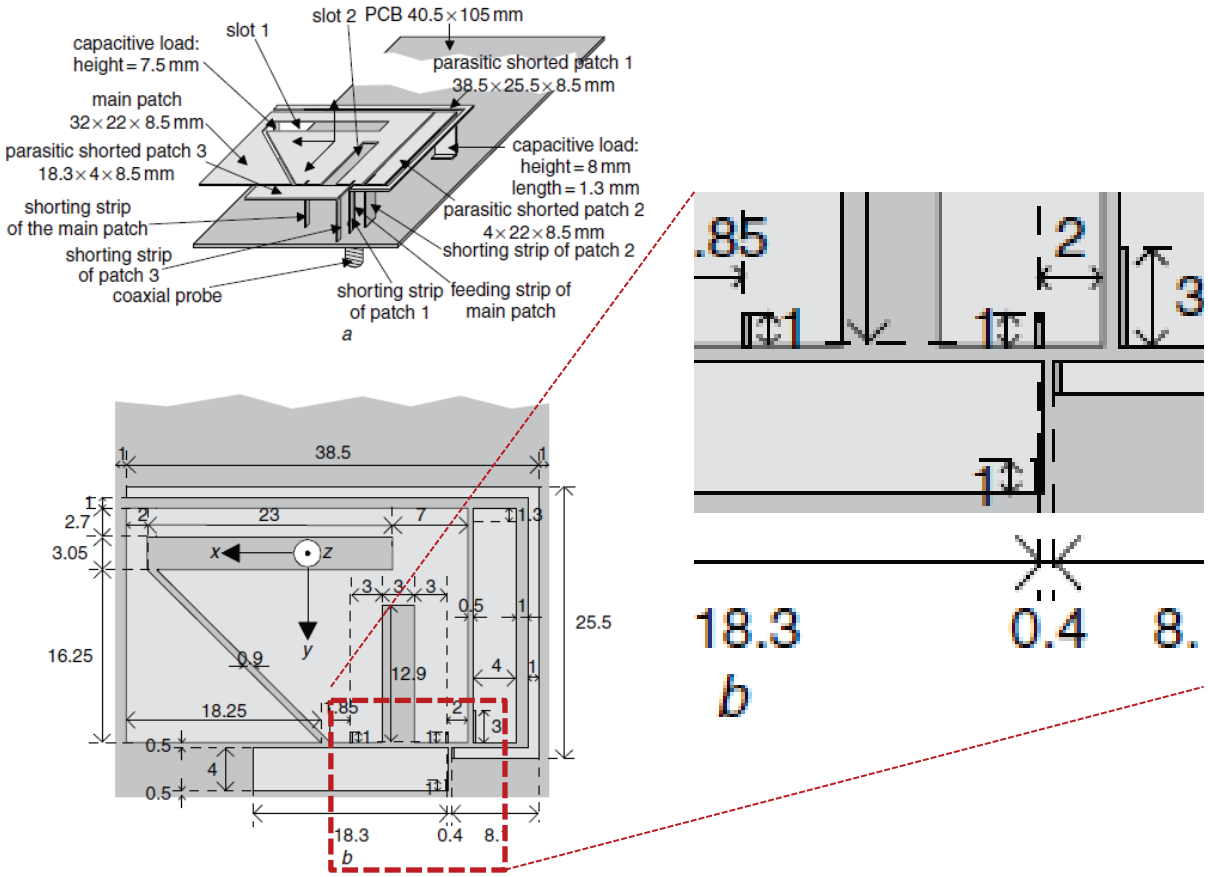

Fig. 1 *3D view of multiband antenna*
a 3D view *b* Top view (all dimensions in millimetres)

Ciais-Multiband Figs. 1(a), 1(b) (annotated detail)

184. Ciais-Multiband states "The antenna presented in this Letter is based on the quad-band structure reported in [Ciais-Quadband]," and explained its goal was "to achieve the tuning of its higher order resonances in the WLAN band" rather than changing the existing resonances in other bands of the Ciais-Quadband antenna. Ciais-Multiband, 920.

185. There is no indication in Ciais-Multiband that any structural adjustment involves changing dimensions of S0, S2, S3, and F0. Instead, to achieve the additional WLAN band, Ciais-Multiband adjusted other parts, such as

~~CONFIDENTIAL - PROTECTIVE ORDER MATERIAL~~

introducing a new slot in the main patch, accompanied with slight adjustments to lengths of parasitic patches. Ciais-Multiband also stated that "the tuning and matching process of the resonances of all the parasitics led to only small modifications compared to the previous structure." Ciais-Multiband, 920.

186. Ciais-Multiband Figure 1(b) shows rectangular segments marking orthogonal projections of the shorting strips and feeding strip S0, S2, S3, and F0. Taking F0 as an example, because the dimensions of F01 and F03 are explicitly provided as 1.0 mm, the length of F02 can be obtained by measuring the figure with the corresponding scale. This yields F02 = 0.2 mm under the scale that F01 = F03 = 1.0 mm.

187. This yields the resulting scaled antenna contour for Ciais's quadband antenna.

~~CONFIDENTIAL - PROTECTIVE ORDER MATERIAL~~

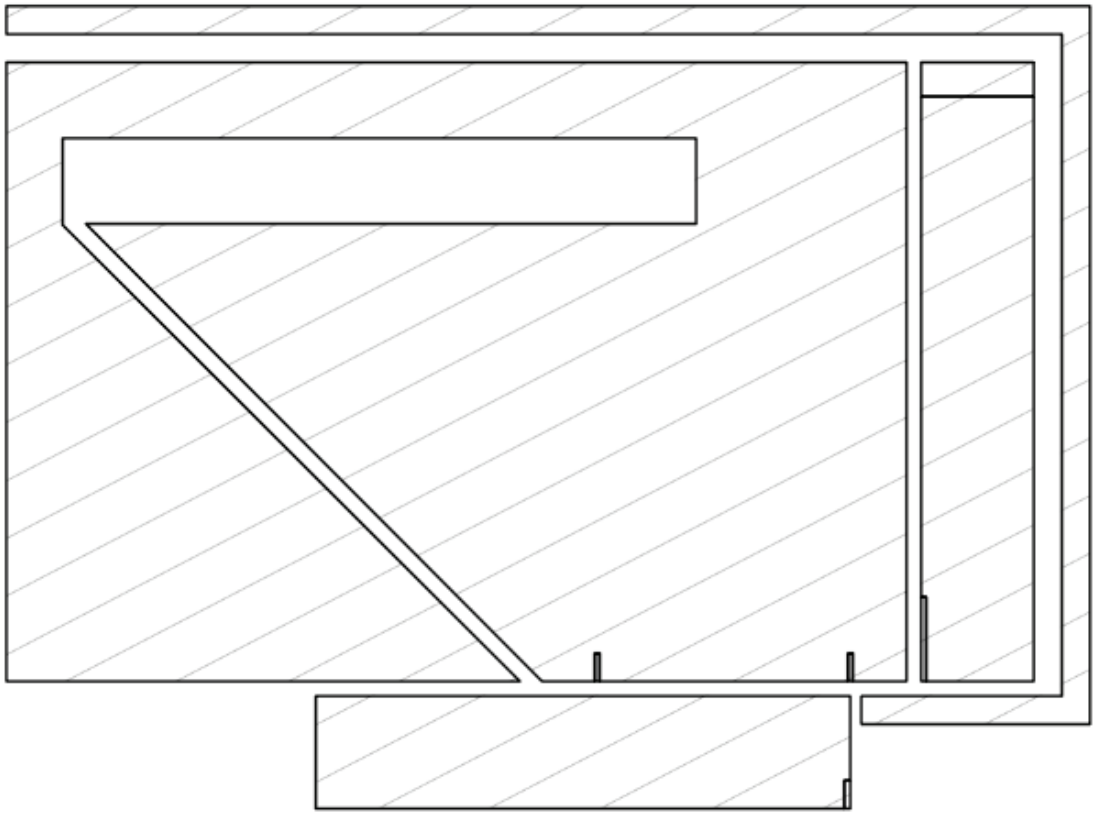

7. Limitation [1.f]

1.f	wherein the first antenna contour has a level of complexity defined by complexity factor F_{21} having a value of at least 1.20 and complexity factor F_{32} having a value less than 1.75; and

188. Dou+Ciais-Quadband meets [1.f] because as shown below the quadband antenna contour ("*first antenna contour*") meeting [1.e] has *complexity factor* F_{21} = 1.31 ("*at least 1.20*") and F_{32} = 1.57 ("*less than 1.75*").

a. Calculating F_{21}

i. Grid G_2

189. The '677 patent identifies a preferred embodiment wherein second grid G_2 has **nine** columns. EX1001, 17:39-41. With a 38.5 mm × 28.5 mm

~~CONFIDENTIAL - PROTECTIVE ORDER MATERIAL~~

antenna rectangle (Ciais-Quadband, Fig. 1(b), 149), **nine columns** yields a cell width $\left(\frac{38.5\ mm}{9}\right) = 4.28$ mm.

190. Setting an odd number of **five**, **seven**, and **nine** rows yields these results, where aspect ratio is the ratio of cell width to cell height (EX1001, 17:19-20):

# rows	cell height (mm)	aspect ratio
5	$\left(\frac{28.5\ mm}{5}\right) = 5.7$	$\left(\frac{4.28}{5.7}\right) = 0.75$
7	$\left(\frac{28.5\ mm}{7}\right) = 4.07$	$\left(\frac{4.28}{4.07}\right) = 1.05$
9	$\left(\frac{28.5\ mm}{9}\right) = 3.17$	$\left(\frac{4.28}{3.17}\right) = 1.35$

191. Therefore **seven** rows provides grid cells "as square as possible," e.g., an aspect ratio closest to one. *Supra* §VIII.E.1.a (claim construction); EX1001, 16:62-65, 17:18-64. Thus, grid G_2 with **nine (9) columns** and **seven (7) rows** has cells "as square as possible[.]"

ii. N_2 = 47

192. Below the 7 x 9 grid G_2 (blue outline) is superimposed over the quadband *antenna contour* below. For visual clarity, the sixteen (16) cells that do ***not*** "include at least a point of the antenna contour" are shaded yellow. *Supra* §VIII.E.2.a; EX1001, 19:1-7. Thus, the G_2 cell count $\boldsymbol{N_2} = (63 - 16) = 47$.

~~CONFIDENTIAL - PROTECTIVE ORDER MATERIAL~~

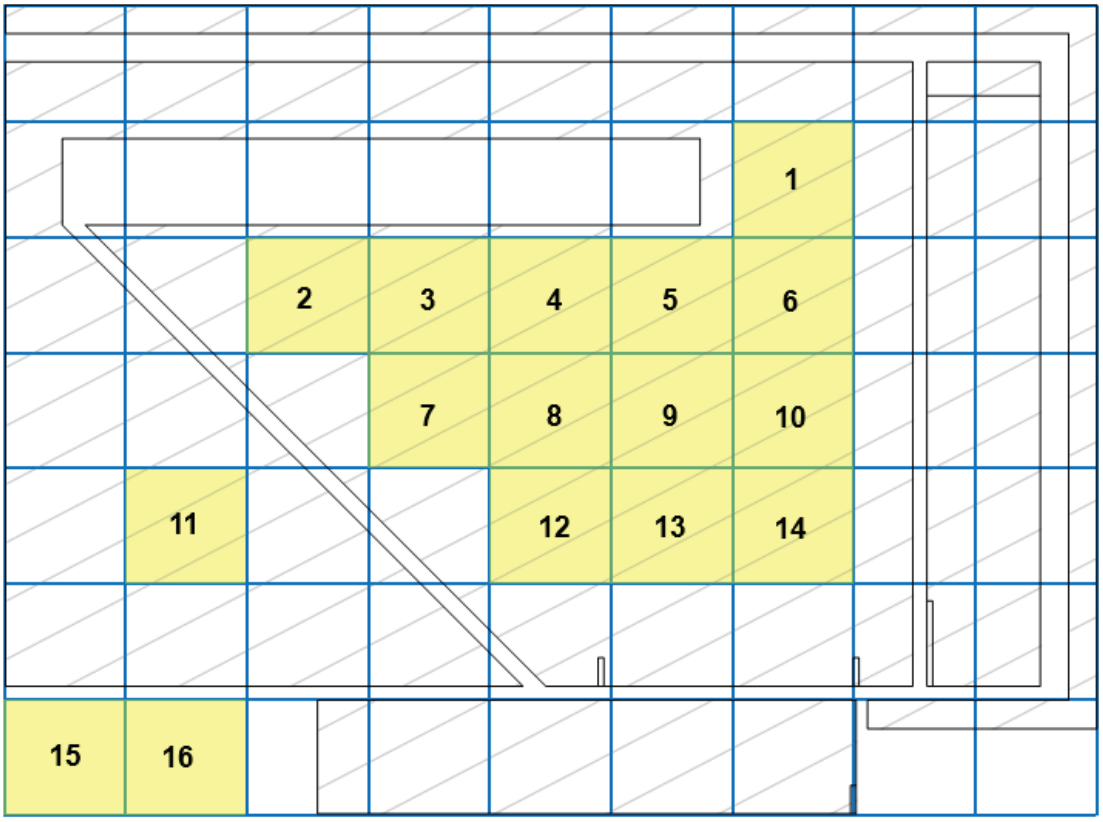

193. Among the cells that I shaded yellow above, cells 1-14 are completely within the quadband *antenna contour*, cells 15-16 are completely outside the *antenna contour*. Thus, cells 1-16 do ***not*** "include at least a point of the antenna contour."

194. In case it is not immediately obvious, I further explain why certain cells "include at least a point of the antenna contour," based on the below annotated figure. *Supra* §VIII.E.2.a; EX1001, 19:1-7. The '677 patent states that "in the present invention the boundary of the cell is also part of the cell[.]" *Supra* §VIII.E.2; EX1001, 19:4-5. Thus, even if a grid cell only includes a single point of

~~CONFIDENTIAL - PROTECTIVE ORDER MATERIAL~~

the antenna contour on its cell boundary, the cell is counted for evaluating complexity factor because it "include[s] at least a point of the antenna contour."

195. The left edges of cells marked C1-C3 below match the left edge of the main patch ("Antenna contour segment 1" in red below), and thus cells C1-C3 each "include at least a point of the antenna contour."

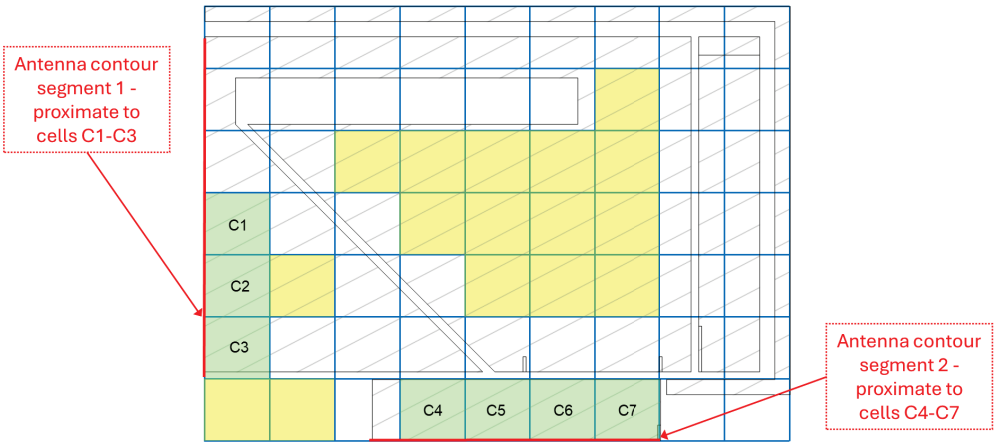

196. Similarly, the bottom of cells marked C4-C7 matches the bottom of patch no. 3 ("Antenna contour segment 2" in red), and thus "include at least a point of the antenna contour."

iii. Grid G_1

197. The quadband antenna feed for the lowest frequency operation is closest to the bottom right corner ("feed point corner") of the *antenna rectangle*, so as discussed *supra* §VIII.E.1.b grid G_1 is placed from the bottom right corner below. Ciais-Quadband, Fig. 1(a) ("feeding strip of main patch"); EX1001, 18:16-54. Grouping four G_2 cells (blue grid lines) into a single G_1 cell results in the 4 x 5 grid G_1 shown below (orange grid lines). EX1001, 18:55-61.

~~CONFIDENTIAL - PROTECTIVE ORDER MATERIAL~~

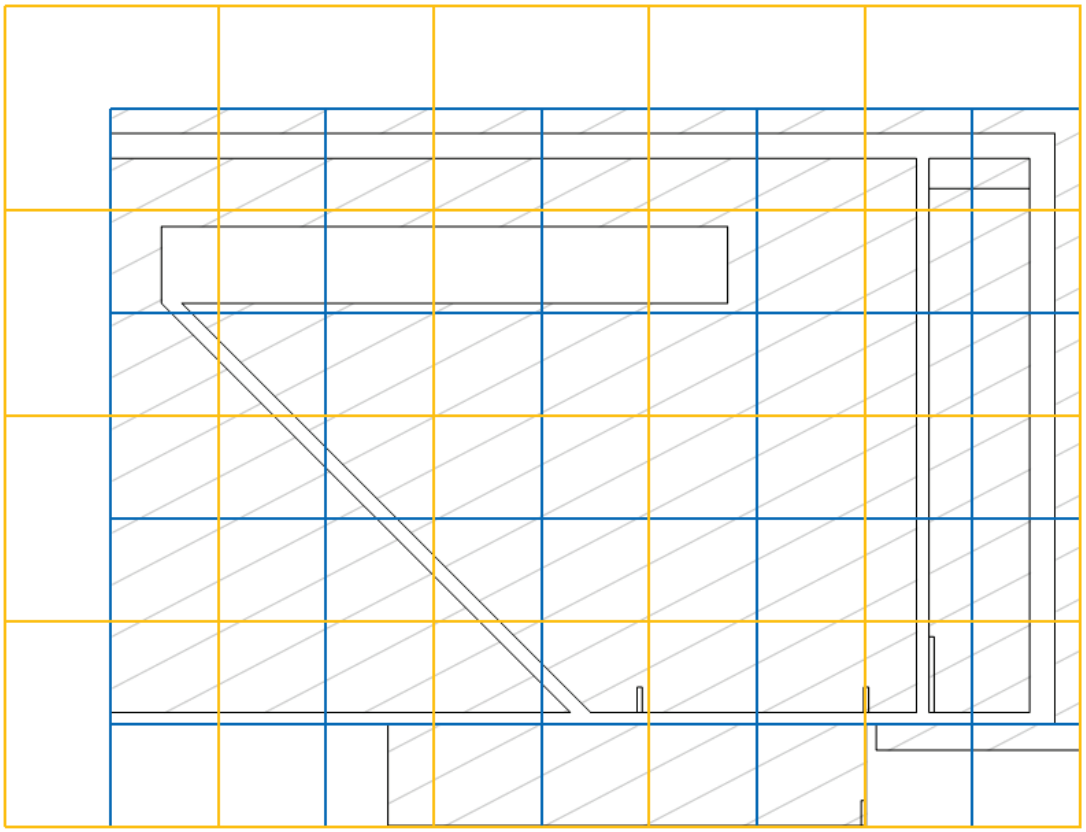

~~CONFIDENTIAL - PROTECTIVE ORDER MATERIAL~~

iv. N_1 = 19

198. A single cell within G_1 (yellow below) does ***not*** "include at least a point of the antenna contour." *Supra* §VIII.E.2.a; EX1001, 19:1-7. Thus, the G_1 cell count $\boldsymbol{N_1} = (20 - 1) = 19$.

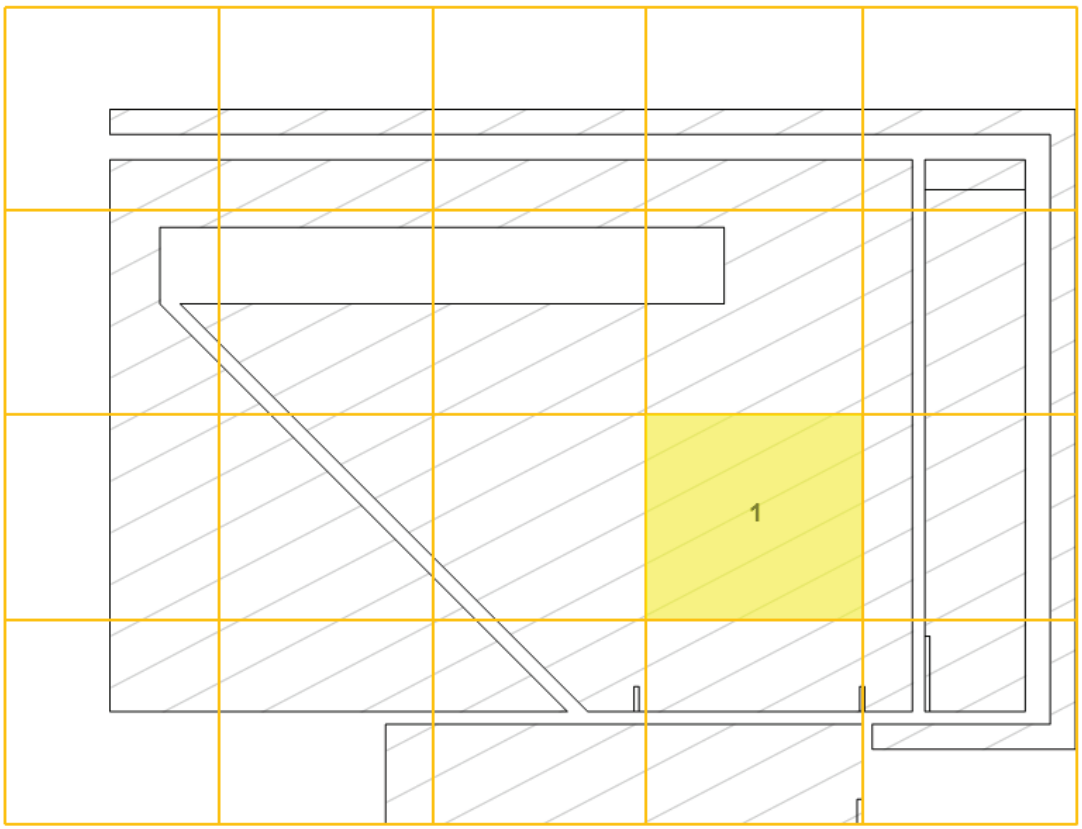

v. Calculation F_{21} = 1.31

199. The complexity factor F_{21} for the quadband antenna contour is thus:

$$\boldsymbol{F_{21}} = -\left(\frac{\log(N_2) - \log(N_1)}{\log(1/2)}\right) = -\left(\frac{\log(47) - \log(19)}{(-1)\log(2)}\right)$$

$$= \left(\frac{\log(47/19)}{\log(2)}\right) = \left(\frac{0.393}{0.301}\right) = 1.31.$$

Supra §VIII.E.2.a; EX1001, 19:8-14.

~~CONFIDENTIAL - PROTECTIVE ORDER MATERIAL~~

b. Calculating F_{32}

i. Grid G_3

200. Grid G_3 is 14 rows by 18 columns so that four G_3 cells (green outline) comprise a single *G2* cell (blue outline). *Supra* §VIII.E.1.c; EX1001, 19:51-60. The G_3 cells have width $\left(\frac{38.5mm}{18}\right) = 2.139$ mm and height $\left(\frac{28.5mm}{14}\right) = 2.036$ mm.

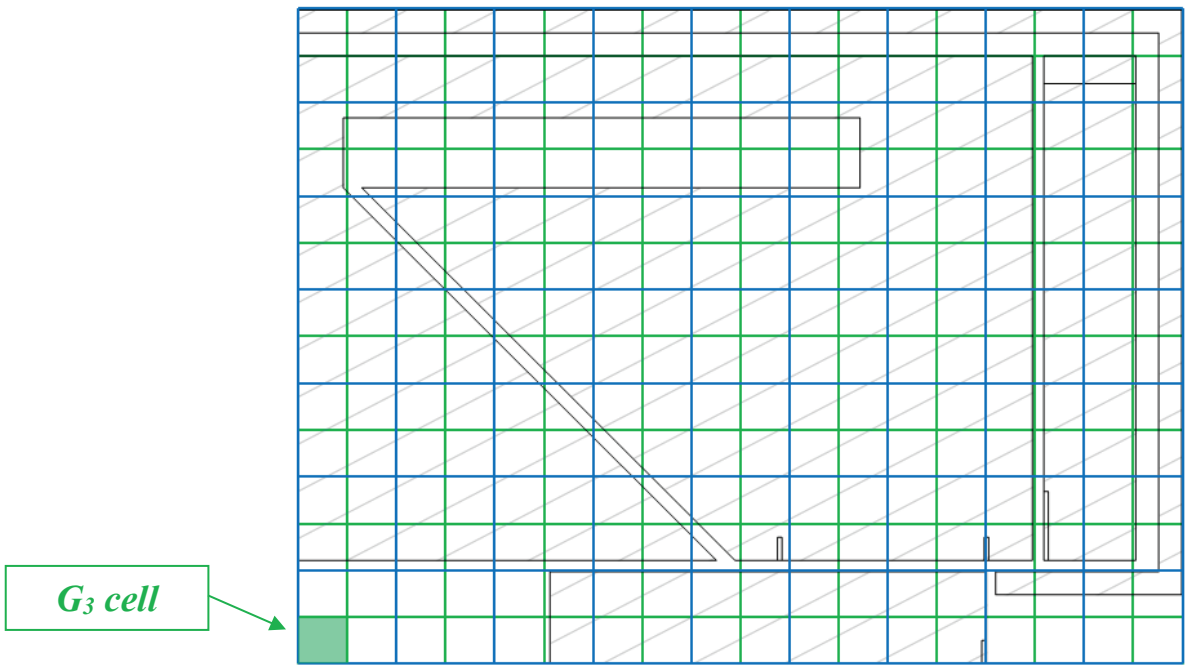

ii. $N_3 = 140$

201. As shown below 112 numbered G_3 cells do ***not*** "include at least a point of the antenna contour." *Supra* §VIII.E.2.b; EX1001, 19:61-67. Thus, the G_3 cell count $\boldsymbol{N_3} = (252 - 112) = 140$.

~~CONFIDENTIAL - PROTECTIVE ORDER MATERIAL~~

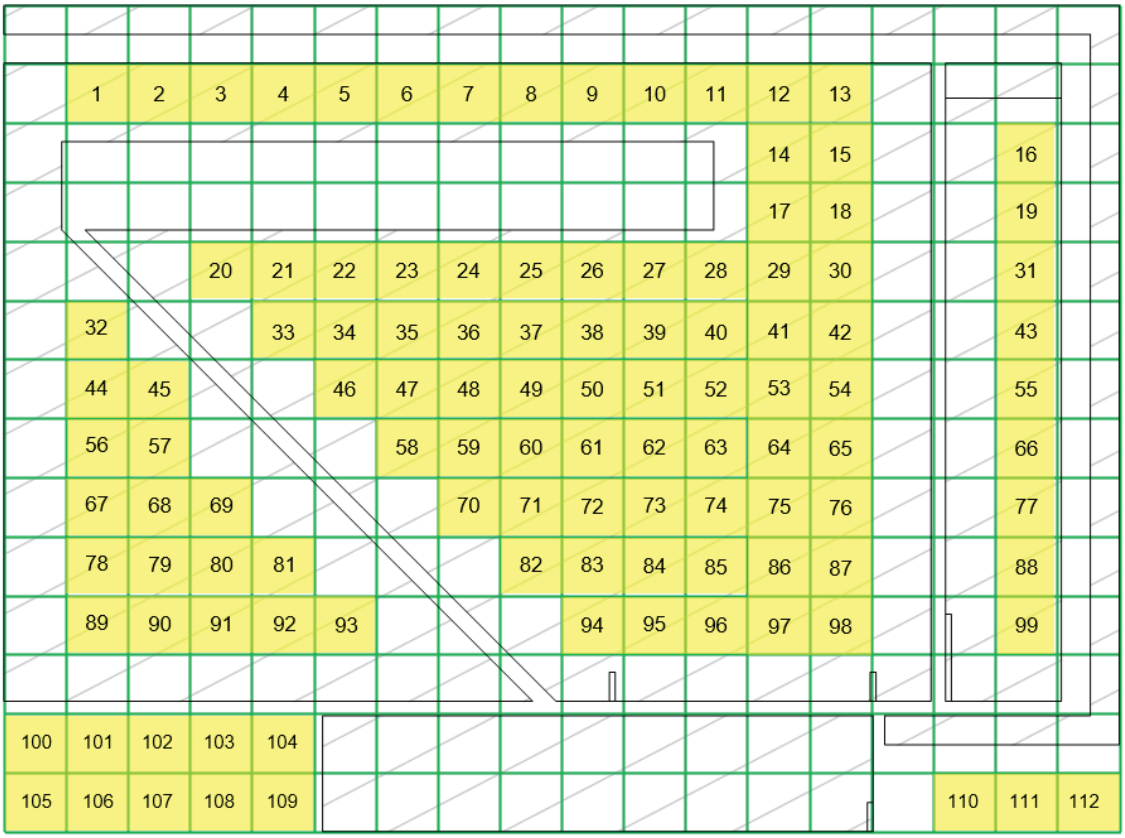

202. Among the cells that I shaded yellow above, cells 1-99 are completely within the quadband antenna contour, cells 100-112 are completely outside the antenna contour. Thus, cells 1-112 do not "include at least a point of the antenna contour." *Supra* §VIII.E.2.b; EX1001, 19:61-67.

203. In case it is not immediately obvious, I further explain whether certain G_3 cells "include at least a point of the antenna contour," alongside the below annotated plots and a table summarizing relevant dimensions. *Supra* §IX.D.6 ([1.e]); Ciais-Quadband, Fig. 1(b), 148.

~~CONFIDENTIAL - PROTECTIVE ORDER MATERIAL~~

Symbol	Length (mm)	Explanation
W1	1	Width of parasitic patch no. 1
W2	4	Width of parasitic patch no. 2
W3	4	Width of parasitic patch no. 3
S1	1	Spacing between patch no. 1 and main patch
S2	1	Spacing between patch no. 1 and patch no. 2
S3	0.5	Spacing between patch no. 2 and main patch
S4	0.4	Spacing between patch no. 1 and patch no. 3
D1	2	Distance between right edge of main patch and center line of projection of feeding strip
D2	8.1	Length of the bottom arm of patch no. 1

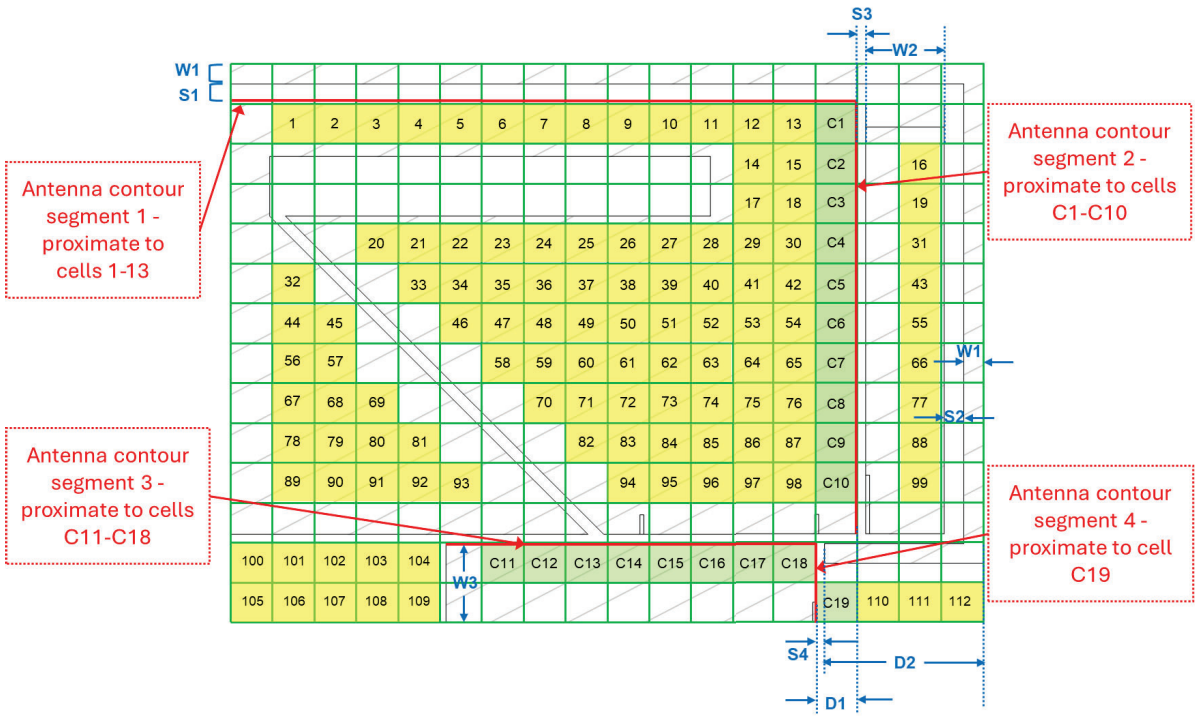

204. The top edge of cells numbered 1-13 (yellow shaded above) is 2.036 mm (a G_3 cell height) from the top of the *antenna rectangle*. The proximate *antenna contour* edge ("segment 1" highlighted above in red) is W1+S1 = 1.0+1.0 = 2 mm from the top of the *antenna rectangle* and thus lies ***above*** the top edge of

~~CONFIDENTIAL - PROTECTIVE ORDER MATERIAL~~

cells 1-13. Therefore, the cells numbered 1-13 do not "include at least a point of the antenna contour." Ciais-Quadband, Fig. 1(b), 148.

205. The right edges of cells numbered C1-C10 (green shaded above) are 2.139 × 3 = 6.417 mm (three times the G_3 cell width) from the right edge of the *antenna rectangle*. The proximate *antenna contour* edge ("segment 2" highlighted above in red) is W1+S2+W2+S3 = 1+1+4+0.5 = 6.5 mm (highlighted in blue) from the right edge of the *antenna rectangle*, and thus lies inside cells C1-C10. *Supra* §IX.D.6; Ciais-Quadband, Fig. 1(b), 148. Cells C1-C10 therefore "include at least a point of the antenna contour."

206. The top edges of cells numbered C11-C18 are 2.036 × 2 = 4.072 mm (two times the G3 cell height) from the bottom of the antenna rectangle. The proximate *antenna contour* edge ("segment 3" highlighted above in red) is 4 mm (i.e., width of parasitic patch no. 3) from the bottom of the antenna rectangle and thus ***within*** cells C11-C18. *Supra* §IX.D.6 ([1.e]); Ciais-Quadband, Fig. 1(b), 148. Cells C11-C18 therefore include the *antenna contour* passing through them and thus "include at least a point of the antenna contour."

207. The left edge of cell numbered C19 is 2.139 × 4 = 8.556 mm (four times the G_3 cell width, because C19 is at the fourth column from right) from the right edge of the *antenna rectangle*. The proximate *antenna contour* edge ("segment 4" highlighted above in red) is W1+S2+W2+S3 +D1 = 1+1+4+0.5+2 =

~~CONFIDENTIAL - PROTECTIVE ORDER MATERIAL~~

8.5 mm from the right edge of the *antenna rectangle*,. *Supra* §IX.D.6; Ciais-Quadband, Fig. 1(b), 148. This distance is confirmed by calculating it in another way: D2+S4 = 8.1+0.4 = 8.5 mm. Thus, the proximate *antenna contour* edge lies ***within*** cell C19, i.e., goes through cell C19. Cell 19 thus "include[s] at least a point of the antenna contour." Ciais-Quadband, Fig. 1(b), 148.

208. Additionally, the '677 patent states that "in the present invention the boundary of the cell is also part of the cell[.]" *Supra* §VIII.E.2; EX1001, 19:4-5. Thus, even if a grid cell only includes points of the antenna contour on its cell boundary, *e.g.*, the antenna contour matches the cell boundary and doesn't further extend into the cell, the cell "include[s] at least a point of the antenna contour." As shown below, the left edges of cells C20-C29 match the left edge of the main patch ("Antenna contour segment 5" in red below), and thus cells C20-C29 each "include at least a point of the antenna contour." Likewise, the bottom of cells C30-C37 matches the bottom of patch no. 3 ("Antenna contour segment 6" in red below), and thus "include at least a point of the antenna contour."

~~CONFIDENTIAL - PROTECTIVE ORDER MATERIAL~~

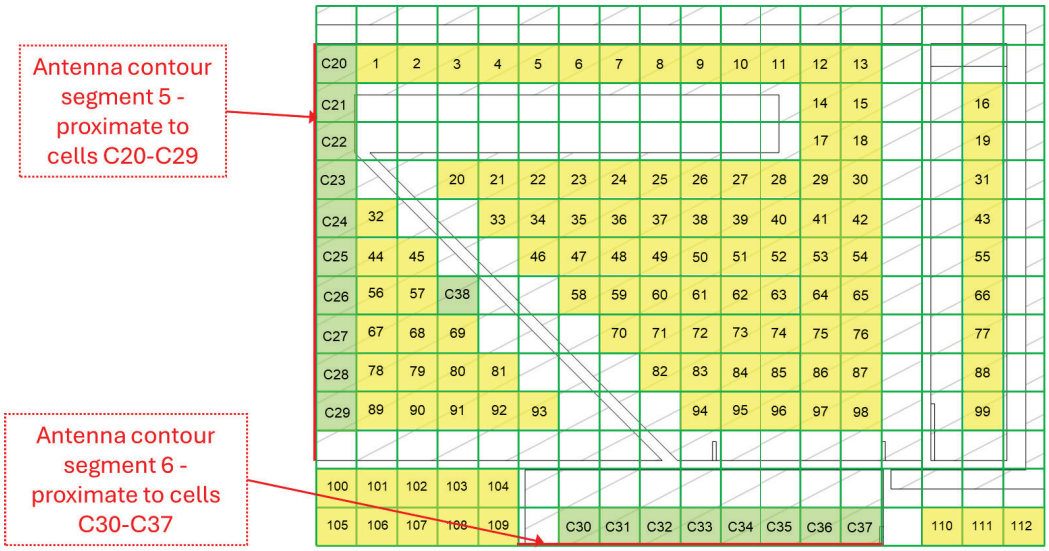

209. Whether cells 45 and C38 "include at least a point of the antenna contour" depends on whether their respective top-right corners are each within the main patch, i.e., if the top-right corner reaches or extends above the "Antenna contour segment 7" (red below) of the triangular portion (annotated in purple below) of the main patch, the cell "include[s] at least a point of the antenna contour."

210. As shown below the purple highlighted portion of the main patch is an isosceles right triangle. This can be confirmed by calculating its vertical and horizontal sides using relevant dimensions provided by Ciais-Quadband (reproduced in my plots below). *Supra* §IX.D.6; Ciais-Quadband, Fig. 1(b), 148. The vertical side is taken as a line segment parallel to the left edge of the main patch, and its length is: 25.50-1.00-1.00-2.70-3.05-0.50-1.00 = 16.25 (see dimensions below). The length of the triangle's horizontal side (along the bottom

~~CONFIDENTIAL - PROTECTIVE ORDER MATERIAL~~

of the main patch) is: 18.25-2.00 = 16.25 mm. Because the vertical and horizontal sides are of equal length and perpendicular to each other, the purple highlighted portion is an isosceles right triangle.

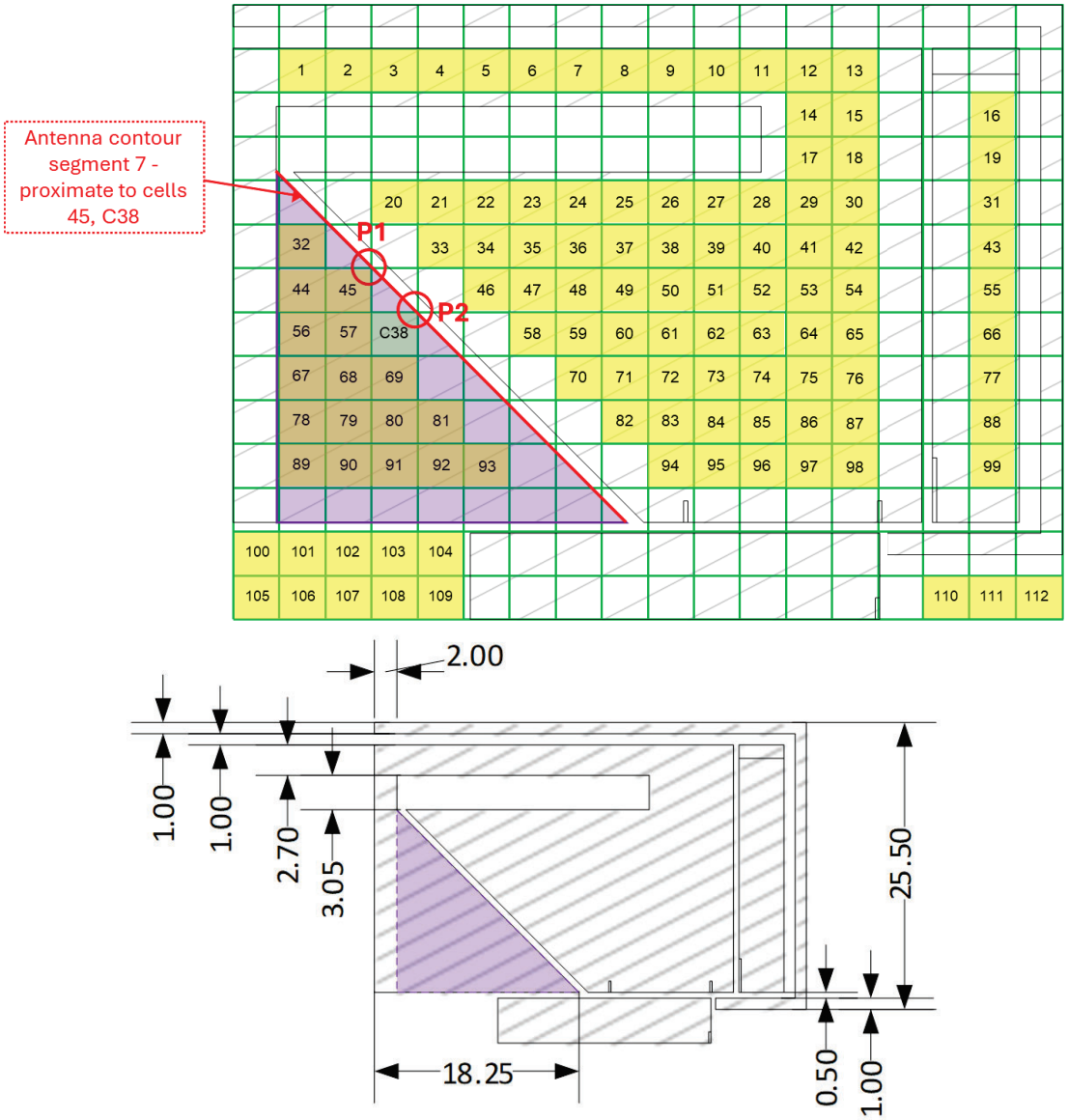

211. Referring back to cell 45 and its top-right corner P1. P1 is 2.139 × 3 = 6.417 mm (three times a G_3 cell width) from the left edge of the *antenna*

~~CONFIDENTIAL - PROTECTIVE ORDER MATERIAL~~

rectangle, and 2.036 × 6 = 12.216 mm from top of the *antenna rectangle*. Relative to the purple triangle's x-y coordinates below, P1's x-position is 6.417 – 2 = 4.417 mm, and y-position is 12.216 -1-1-2.7-3.05 = 4.466 mm. On the "segment 7" (hypotenuse), any point's horizontal (x) and vertical (y) offsets are equal, and thus when x-position is 4.417 mm, the y-position is also 4.417 mm. This is less than P1's y-position. Thus, at the same x-position as P1, the "segment 7" is closer to the top of the *antenna rectangle*, i.e., above P1. That is, P1 lies below "segment 7" and is within the main patch, and thus cell 45 is completely within the main patch and does ***not*** "include at least a point of the antenna contour.

212. Referring now to cell C38 and its top right corner P2. P2 is 2.139 × 4 = 8.556 mm (four times a G_3 cell width) from the left edge of the *antenna rectangle*, and 2.036 × 7 = 14.252 mm from top of the *antenna rectangle*. Relative to the purple triangle's x-y coordinates below, P1's x-position is 8.556 – 2 = 6.556 mm, and y-position is 14.252-1-1-2.7-3.05 = 6.502 mm. On the "segment 7" (hypotenuse), any point's horizontal (x) and vertical (y) offsets are equal, and thus when x-position is 6.556 mm, the y-position is also 6.556 mm. This is more than P2's y-position. Thus, at the same x-position as P2, the "segment 7" is farther from the top of the *antenna rectangle*, i.e., below P2. That is, P2 extends beyond "segment 7" and is outside the main patch, and thus cell C38 "include[s] at least a point of the antenna contour."

~~CONFIDENTIAL - PROTECTIVE ORDER MATERIAL~~

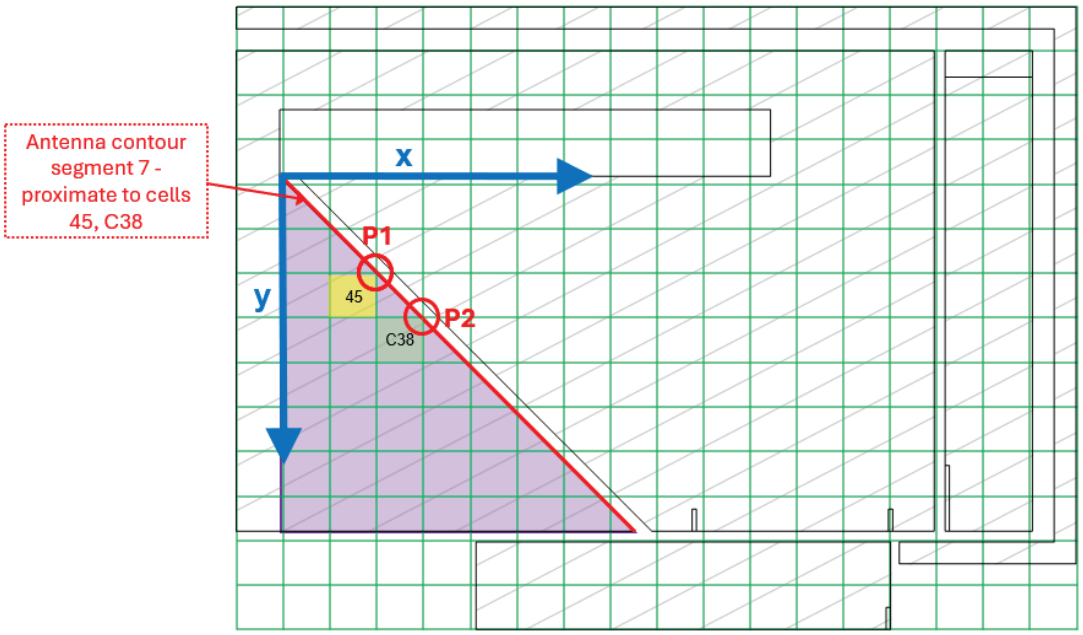

iii. Calculation F_{32} = 1.57

213. The complexity factor F_{32} for the quadband antenna contour is thus:

$$F_{32} = -\left(\frac{\log(N_3) - \log(N_2)}{\log(1/2)}\right) = -\left(\frac{\log(140) - \log(47)}{(-1)\log(2)}\right)$$

$$= \left(\frac{\log(140/47)}{\log(2)}\right) = \left(\frac{0.474}{0.301}\right) = 1.57.$$

Supra §VIII.E.2.b; EX1001, 20:1-5.

8. Limitation [1.g]

1.g	a second antenna within the wireless device and configured to support at least one frequency band different from the at least three frequency bands supported by the first antenna,

214. Dou+Ciais-Quadband meets [1.g] at least two ways. As explained *supra* §IX.C (combination), Dou+Ciais-Quadband comprises Dou's GPS antenna

~~CONFIDENTIAL - PROTECTIVE ORDER MATERIAL~~

(1575 MHz) and an antenna for WiFi and Bluetooth (ISM 2.4 GHz). Dou, [0022], [0040].

a. Case 1: "*second antenna*" is Dou GPS

215. Dou+Ciais-Quadband meets [1.g] wherein Dou's GPS antenna is the *second antenna* because the 1575 frequency band for GPS L1 is not covered by and is different from any communication band covered by the Ciais quadband antenna. Ciais-Quadband, Fig. 3, 148-149.

b. Case 2: "*second antenna*" is Dou WiFi/Bluetooth

216. Dou+Ciais-Quadband meets [1.g] wherein Dou's antenna for WiFi and Bluetooth is the *second antenna* because the Ciais quadband antenna does not cover the 2400-2500 MHz (e.g., 2.4 GHz ISM band) used by WLAN/WiFi or Bluetooth. Ciais-Quadband, Fig. 3, 148-149.

9. Limitation [1.h]

1.h	the second antenna being arranged completely within the ground plane rectangle.

217. Dou+Ciais-Quadband meets [1.h] for each mapping of a "*second antenna*" in [1.g].

218. Dou describes antenna 208, mounted over ground plane 210, within the "*ground plane rectangle*" defined by the perimeter of PCB 204, covering frequencies for GPS and WiFi/Bluetooth. Dou, Figs. 2A-2B, [0022]. Thus, in that embodiment, Dou shows that it was conventional to provide GPS and

~~CONFIDENTIAL - PROTECTIVE ORDER MATERIAL~~

WiFi/Bluetooth coverage with an antenna mounted over a ground plane and thus within a "ground plane rectangle."

219. EX1029 also describes a GPS antenna (64), WLAN antenna 61, and Bluetooth antenna 66 disposed on a PCB 20. EX1029, Fig. 9 (below), [0044] (GPS antenna **64**, WLAN antenna **61**, Bluetooth antenna **66**).

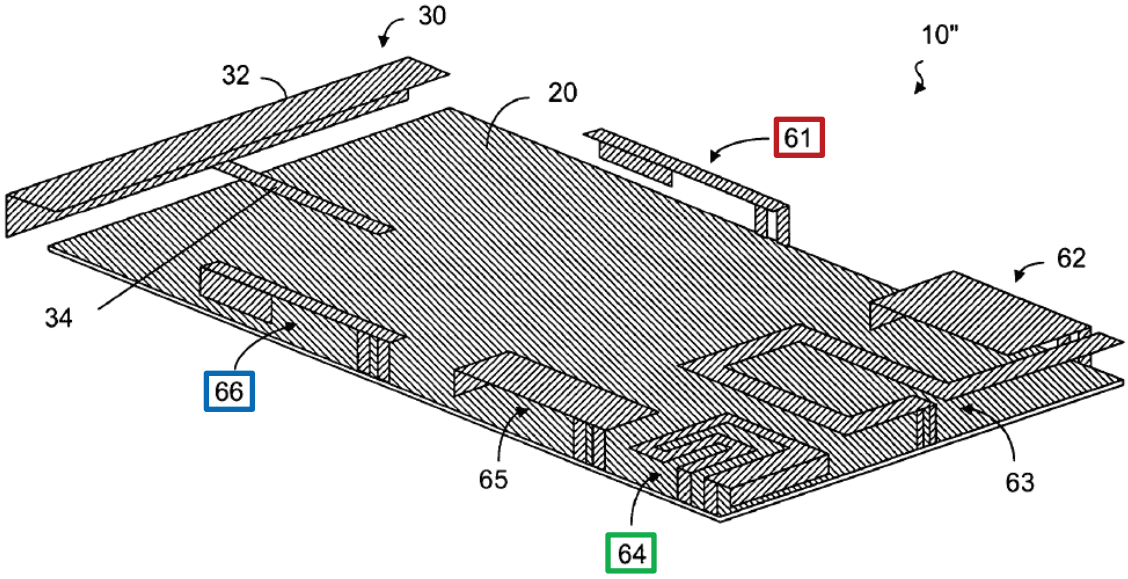

FIG. 9

220. EX1029 explains that PCB 20 ("printed wire board (PWB 20)") is a ground plane. EX1029, [0035] ("PWB 20 with a ground plane"), [0038] (same), [0047] ("the ground plane (PWB)"). EX1029 confirms that it was conventional to dispose a GPS antenna and a WiFi (WLAN) or Bluetooth antenna over a rectangular ground plane (e.g., spanning the back of the PCB as taught in Ciais), and hence within a ground plane rectangle defined by the ground plane's boundary.

~~CONFIDENTIAL - PROTECTIVE ORDER MATERIAL~~

221. Thus, Dou+Ciais-Quadband would have arranged Dou's GPS and WiFi and Bluetooth antennas "completely within the ground plane rectangle" meeting [1.h] because this was conventional, and Dou describes arranging antennas for those frequencies over a ground plane.

E. Claim 2

2	[Claim 1's device], wherein the first antenna contour comprises at least 20 segments.

222. Dou+Ciais-Quadband's "*first antenna*" (the Ciais quadband antenna) meets claims 2 because the *antenna contour* has "*at least 20 segments*" (claim 2).

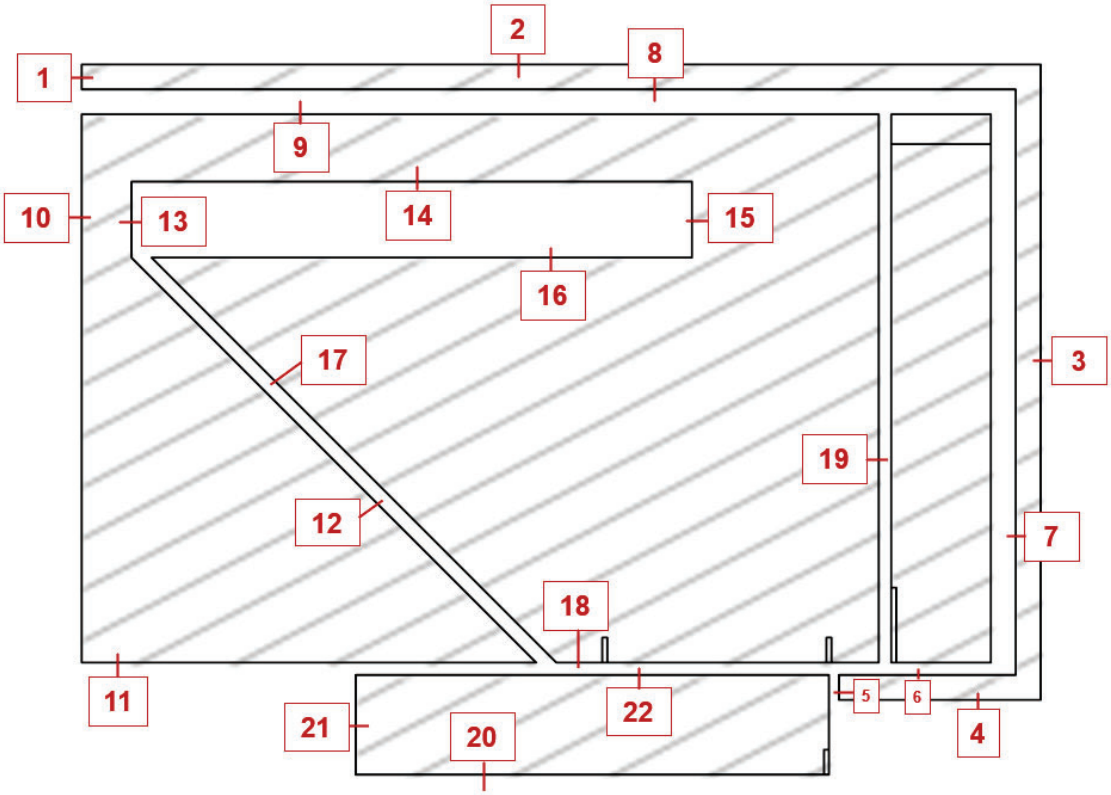

~~CONFIDENTIAL - PROTECTIVE ORDER MATERIAL~~

F. Claim 3

3	[Claim 2's device], wherein the perimeter of the first antenna contour comprises at least 35 segments.

223. In litigation Fractus argues that counting an antenna contour's interior segments meets claim 3. EX1047, 11 (counting segments 11-13, 15-18, 20-30, 34, detail below).

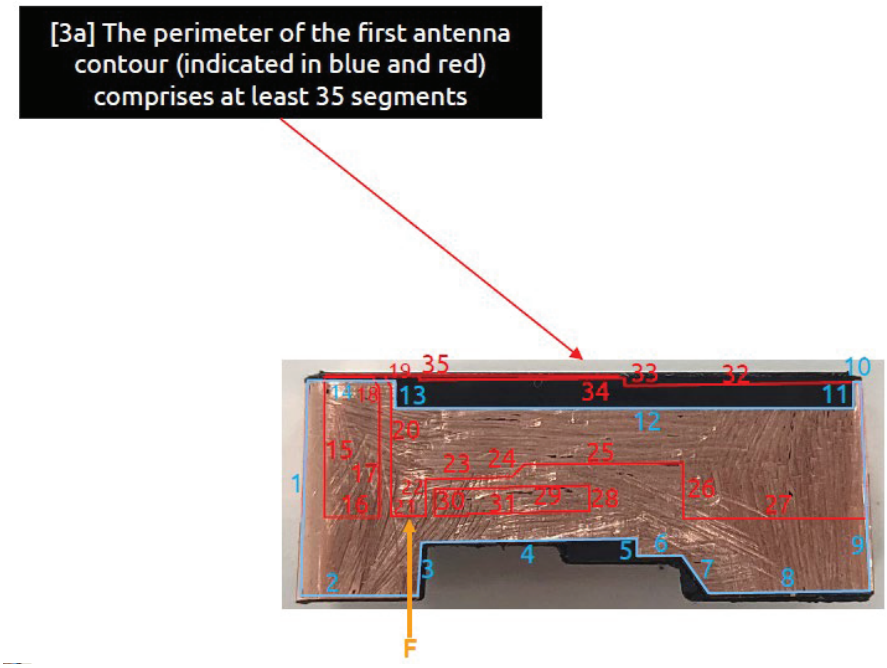

224. Using Fractus's analysis Dou+Ciais-Quadband's "*first antenna*" has at least 35 segments.

~~CONFIDENTIAL - PROTECTIVE ORDER MATERIAL~~

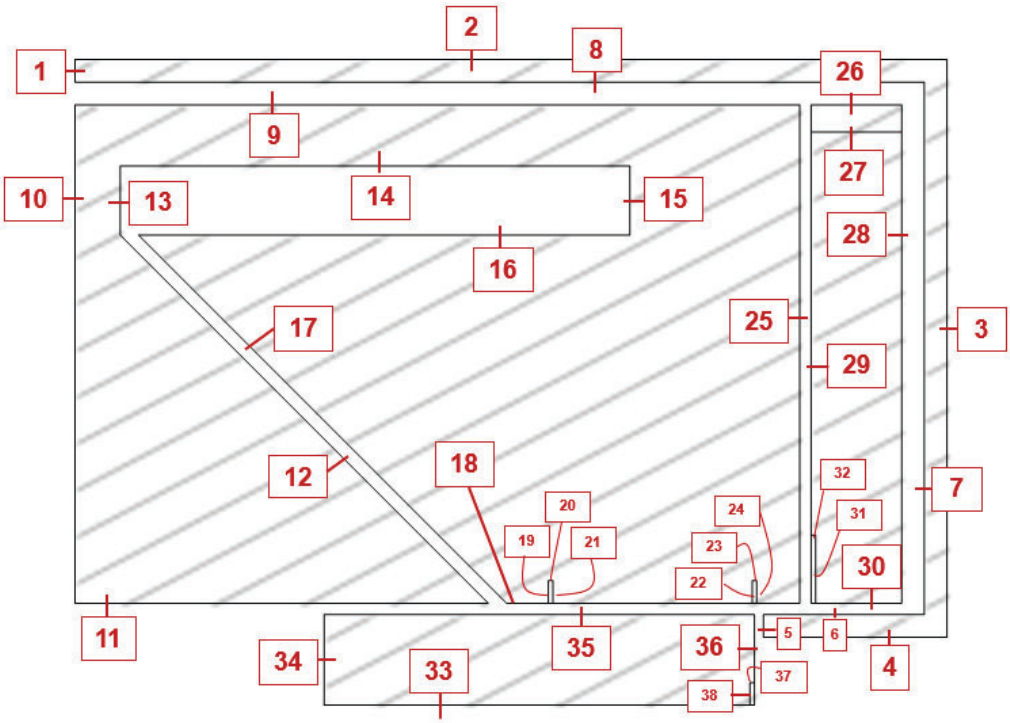

G. Claim 4

4	[Claim 1's device], wherein the antenna system comprises a third antenna configured to receive signals employing a 4G communication standard.

225. Dou+Ciais-Quadband meets claim 4 in at least two ways.

226. ***First***, Dou+Ciais-Quadband uses a Ciais quadband antenna as antenna 208. The quadband antenna is "*configured to receive signals employing a 4G communication standard*" as explained *supra* §IX.D.5 ([1.d]). Thus, Dou+Ciais-Quadband meets claim 4 wherein the second Ciais quadband antenna, implementing Dou antenna 208, is the "*third antenna*."

227. ***Second***, Dou+Ciais-Quadband comprises a Dou WiFi/Bluetooth antenna. *Supra* §IX.C (combination). The '677 patent expressly describes WiFi as

~~CONFIDENTIAL - PROTECTIVE ORDER MATERIAL~~

a "4G service" having a corresponding "*4G standard*" (EX1001, 25:1-6). Thus, Dou+Ciais-Quadband meets claim 4 wherein Dou's WiFi antenna is the "*third antenna*."

H. Claim 5

5.a	[Claim 4's device], wherein the third antenna defines an antenna contour comprising an entire perimeter of the third antenna, and
5.b	wherein the antenna contour of the third antenna has a level of complexity defined by complexity factor F_{21} having a value of at least 1.2 and a complexity factor F_{32} having a value of at least 1.35.

228. Dou+Ciais-Quadband meets claim 5 when the Ciais quadband antenna (Dou antenna 208) is mapped to the "*third antenna*" because the quadband has an "*entire perimeter*" that defines an *antenna contour* (*supra* §IX.D.6 ([1.e])) with $F_{21} > 1.2$ and $F_{32} > 1.35$ as explained *supra* §IX.D.7 ([1.f]).

I. Claim 6

1. Preamble [6.PRE], [6.a]-[6.f]

229. Claim 6 repeats many limitations from claim 1. Dou+Ciais-Quadband meets [6.PRE] and [6.a]-[6.f] for the reasons it meets [1.PRE] and [1.a]-[1.f], respectively, as explained *supra* §§IX.D.1-IX.D.7. EX1028, 1-2.

230. Dou+Ciais-Quadband meets the remaining claim 6 limitations as follows.

~~CONFIDENTIAL - PROTECTIVE ORDER MATERIAL~~

2. Limitation [6.g]

6.g	a second antenna within the wireless device and defining a second antenna contour comprising an entire perimeter of the second antenna,

231. Dou+Ciais-Quadband's Ciais quadband antenna that implements Dou antenna 208 within the wireless device (*supra* §IX.D.4 ([1.c]) defines a "*second antenna contour comprising an entire perimeter of the second antenna*" for the reasons the first Ciais quadband antenna (Dou antenna 206) meets [1.e] *supra* §IX.D.6.

3. Limitation [6.h]

6.h	the second antenna being proximate to a second short side of the ground plane rectangle that is opposite to the first short side of the ground plane rectangle,

232. Dou+Ciais-Quadband's antenna 208 ("*second antenna*") is positioned along (*proximate to*) "*a second short side*" of PCB 204 that is opposite to the first short side, which is also the "*second short side of the ground plane rectangle*." *Supra* §IX.D.6 ([1.e]); Dou, Fig. 2A, [0016]-[0017].

~~CONFIDENTIAL - PROTECTIVE ORDER MATERIAL~~

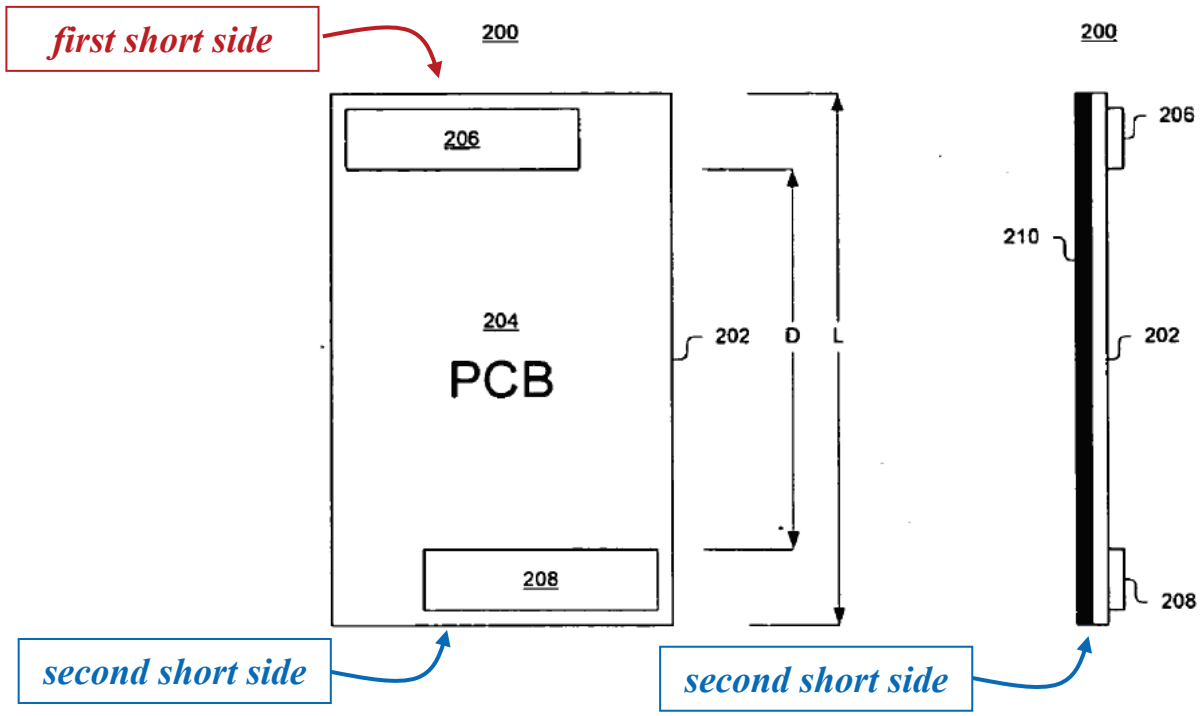

FIG. 2A FIG. 2B

4. Limitation [6.i]

6.i	a minimum-sized parallelepiped of rectangular faces that completely encloses a volume of the second antenna defining an antenna box, and

233. Dou+Ciais-Quadband meets [6.i] because it has an "*antenna box*" defined by "*a minimum-sized parallelepiped of rectangular faces that completely encloses a volume of the*" Ciais quadband antenna ("*second antenna*") as shown by the dotted red outline in Ciais-Quadband Fig. 1(a) (annotated below).

~~CONFIDENTIAL - PROTECTIVE ORDER MATERIAL~~

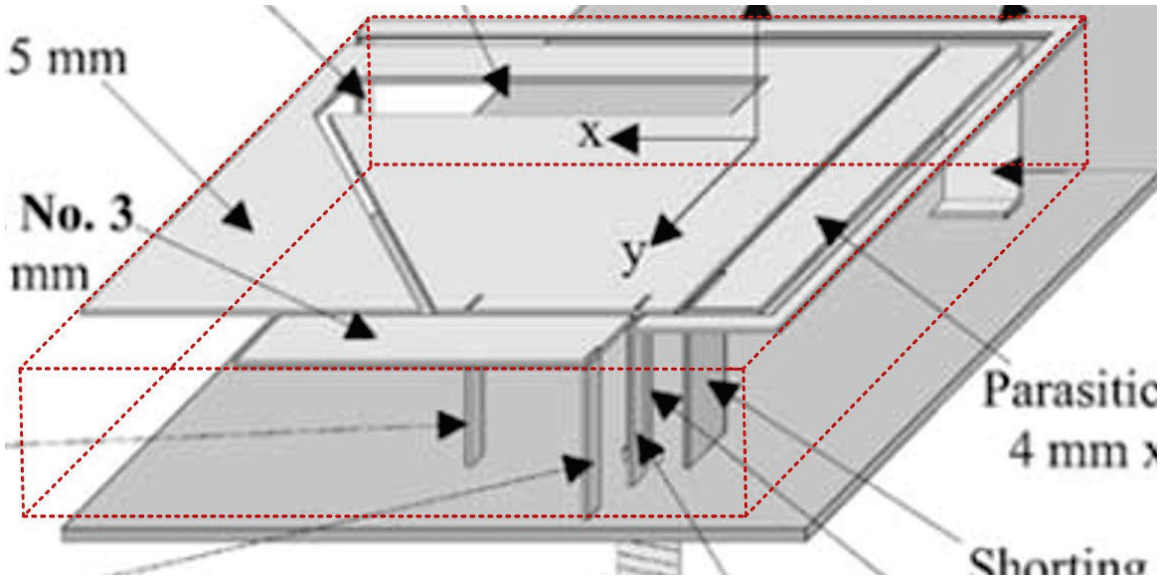

5. Limitation [6.j]

6.j	an orthogonal projection of the antenna box along a normal to a face with a largest area of the second antenna defining an antenna rectangle,

234. Limitation [6.j] recites in part the specification's "*antenna contour*" definition as shown in the claim construction *supra* §VIII.D. Dou+Ciais-Quadband meets [6.j] because the second Ciais quadband antenna has an "*antenna contour*" formed by this orthogonal projection step through the quadband antenna "main patch" as explained *supra* §IX.D.6 ([1.e]).

~~CONFIDENTIAL - PROTECTIVE ORDER MATERIAL~~

6. Limitation [6.k]

6.k	wherein a length of the second antenna contour is greater than four times a diagonal of the antenna rectangle.

235. Dou+Ciais-Quadband's *second antenna* (the quadband antenna) has a 38.5 mm × 28.5 mm *antenna rectangle* with a diagonal of $((38.5)^2 + (28.5)^2)^{0.5} = 47.9$ mm, and 4×47.9 mm $= 191.6$ mm.

236. The quadband antenna contour is longer than 191.6 mm, meeting [6.k]. The segments bounding regions A, B, and C ***alone*** (denoted below) are 240.2 mm > 191.6 mm long. Ciais-Quadband, Fig. 1(b).

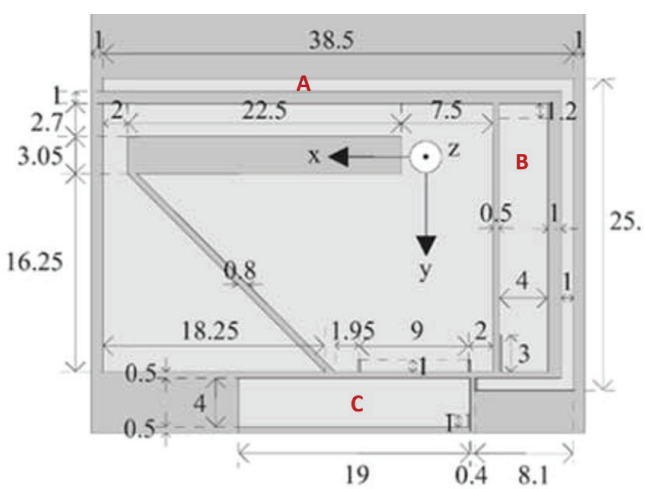

Region	Feature	mm
A	top leg	38.5
		37.5
		1
	right leg	25.5
		23.5
	bottom leg	8.1
		1
		7.1
B	top	4
	bottom	4
	sides	22
		22
C	top	19
	bottom	19
	sides	4
		4
	TOTAL:	**240.2**

~~CONFIDENTIAL - PROTECTIVE ORDER MATERIAL~~

J. Claims 7, 8

7	[Claim 6's device], wherein the first antenna contour comprises at least 20 segments.
8	[Claim 7's device], wherein the first antenna contour comprises at least 35 segments.

237. Dou+Ciais-Quadband meets claim 7 for the reasons it meets claim 2 *supra* §IX.E.

238. Dou+Ciais-Quadband meets claim 8 because for Ciais's quadband antenna the "*antenna contour*" has "*at least 35 segments*" (claim 3) as shown below.

~~CONFIDENTIAL - PROTECTIVE ORDER MATERIAL~~

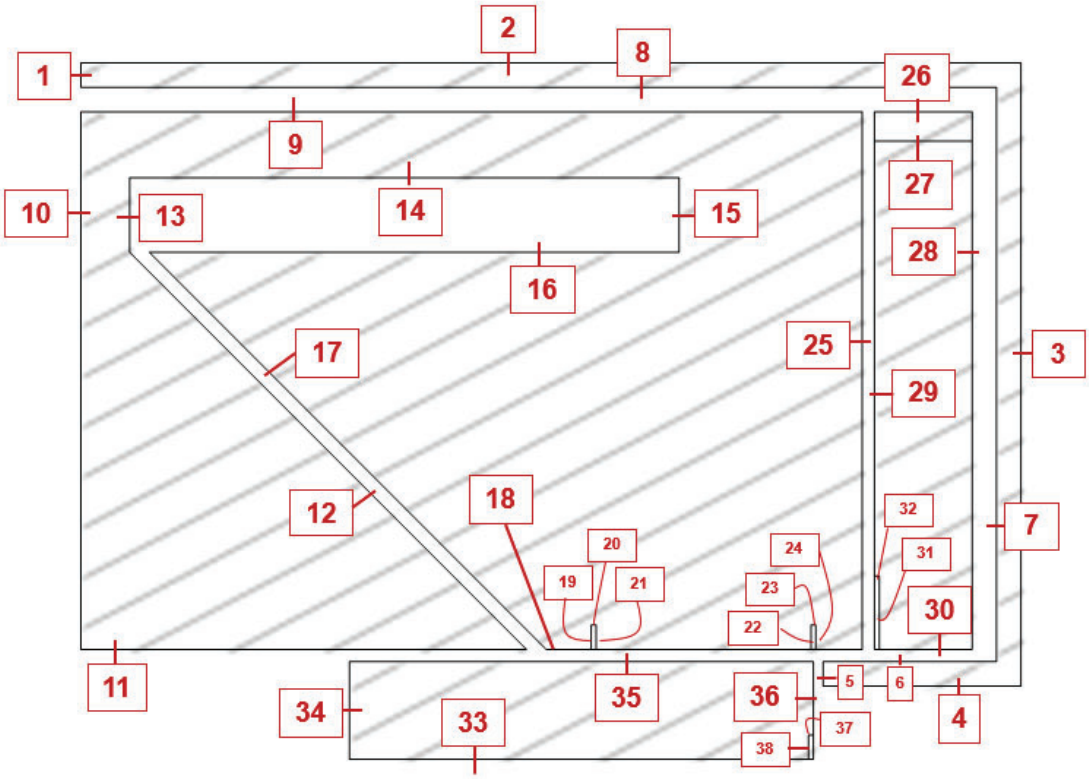

K. Claim 9

9	[Claim 6's device], wherein the second antenna contour has a level of complexity defined by complexity factor F_{21} having a value of at least 1.2 and a complexity factor F_{32} having a value of at least 1.35.

239. The "*second antenna*" is a Ciais quadband antenna. *Supra* §IX.I.2 ([6.g]). Dou+Ciais-Quadband meets claim 9 for the reasons the Ciais quadband antenna meets the same *complexity factor* limitations in [5.b] (where the Ciais quadband antenna is mapped to a "third antenna"). *Supra* §IX.H (claim 5).

~~CONFIDENTIAL - PROTECTIVE ORDER MATERIAL~~

X. GROUND 2: DOU+CIAIS-QUADBAND+NAKANO RENDERS OBVIOUS CLAIMS 1-20

A. References

1. Nakano (EX1012)

240. Nakano describes a WLAN [wireless local area networking] antenna for use "inside mobile phone handsets." Nakano, 2417. The antenna extends from a ground plate that "backs a radiation element (patch element)," and covers WLAN bands at "2.45 GHz" (e.g., 2400-2500 MHz) and 5.2 GHz. Nakano, 2417, 2419, Fig. 4.

2. Dou+Ciais-Quadband+Nakano

241. A POSA would have had reasons to use Ciais's quadband antenna to implement Dou's antennas 206 and 208, alongside Dou's GPS antenna, as explained *supra* §IX.C. A POSA would have had reasons to use Nakano's WLAN antenna in Dou—instead of the Dou WiFi/Bluetooth antenna in Dou+Ciais-Quadband—because Nakano's antenna covered the 5.2 GHz band as used by IEEE Std. 802.11a, in addition to the "2.45 GHz" (2400-2500 MHz) ISM band used by IEEE Std. 802.11b and Bluetooth (which Dou's antenna covered). EX1042, 3 (802.11a uses 5.15-5.35 GHz band), 26 (Table 88 showing channels in 5 GHz bands); EX1043, 49-50 (802.11b defines channels between 2400 and 2484 MHz); EX1044, 27 ("Bluetooth devices operate in the unlicensed 2.4 GHz ISM [] band.").

~~CONFIDENTIAL - PROTECTIVE ORDER MATERIAL~~

242. Nakano's dual-frequency WLAN antenna met an "increasing demand for wireless communications" (Nakano, 2417). The market demand gave POSAs reasons to include Nakano's antenna in Dou's wireless device.

243. Nakano's InvFL extends from a "co-planar ground plate" on the short side of a rectangular "card-type structure." Nakano, 2517, Fig. 1. A POSA would have preserved this placement in Dou's wireless device by placing the InvFL antenna coplanar with ground plane 210 (Dou, Fig. 2B) and extending it from the ground plane as shown below, similar to Dou's Figure 3B laterally offsetting antenna 308 below ground plane 310. Dou, Figs. 2A-2B (modified below), 3B, [0016]-[0017].

~~CONFIDENTIAL - PROTECTIVE ORDER MATERIAL~~

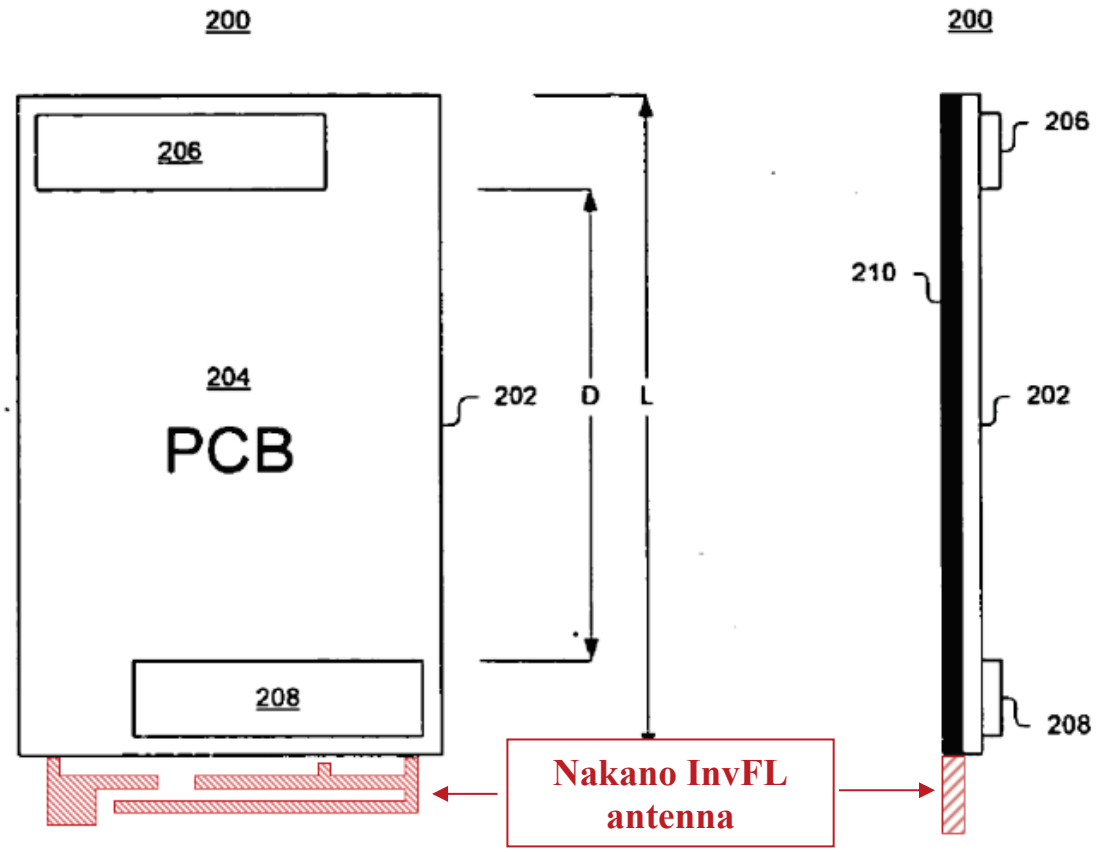

244. A POSA would have had a reasonable expectation of success in combining Ciais and Nakano's teachings with Dou (hereinafter "Dou+Ciais-Quadband+Nakano") for the reasons explained *supra* §IX.C, and because Nakano's antenna was designed for internal use in "mobile phone handsets" like Dou's wireless device. Nakano, 2417. Combining multiple antennas within a single wireless device was conventional and within the POSA's ordinary skill. *Supra* §IX.C; EX1029, Fig. 9.

~~CONFIDENTIAL - PROTECTIVE ORDER MATERIAL~~

B. Claims 1-5

245. Dou+Ciais-Quadband+Nakano meets claims 1-5 for the reasons Dou+Ciais-Quadband meets them as explained *supra* §§IX.D (claim 1)-IX.H (claim 5), wherein Nakano's InvFL antenna replaces Dou's WiFi/Bluetooth antenna in Dou+Ciais.

C. Claims 6-9

246. Dou+Ciais-Quadband+Nakano meets claims 6-9 for the reasons Dou+Ciais-Quadband meets them, as explained *supra* §§IX.I (claim 6)-IX.K (claim 9), wherein Dou's antenna 206 is a first Ciais quadband antenna ("*first antenna*"), Dou's antenna 208 is a second Ciais quadband antenna ("*second antenna*"), and—as noted above—Nakano's InvFL antenna replaces Dou's WiFi/Bluetooth antenna in Dou+Ciais-Quadband.

D. Claim 10

10	[Claim 6's device], wherein the antenna system comprises a third antenna configured to provide wireless connectivity in at least two frequency bands.

247. Dou+Ciais-Quadband+Nakano meets the additional limitations in claim 10 because Nakano's InvFL antenna ("*third antenna*") provides WLAN ("*wireless connectivity*") in the 2400-2500 MHz ISM band for IEEE Std. 802.11b and Bluetooth, and in the 5150-5250 MHz and 5250-5350 MHz bands for IEEE Std. 802.11a (which Dou calls "5.2 GHz" band). Nakano, Fig. 4, 2417, 2419.

~~CONFIDENTIAL - PROTECTIVE ORDER MATERIAL~~

E. Claim 11

1. Limitation [11.a]

11.a	[Claim 10's device], wherein the third antenna defines a third antenna contour comprising an entire perimeter of the third antenna, and

248. Dou+Ciais-Quadband+Nakano meets [11.a] wherein Nakano's inverted FL ("InvFL") antenna is the "*third antenna*" because Nakano's InvFL antenna defines a *third antenna contour* (annotated in red below) based on Figure 1(b) as shown below, comprising the *entire perimeter* of the InvFL antenna. *Supra* §§VIII.A, VIII.C, VIII.D; Nakano, 2417, Fig. 1(b). As shown below, Nakano's *antenna contour* is bounded by the *antenna rectangle* (purple outline). Nakano, 2417, 2419, Fig. 1(b).

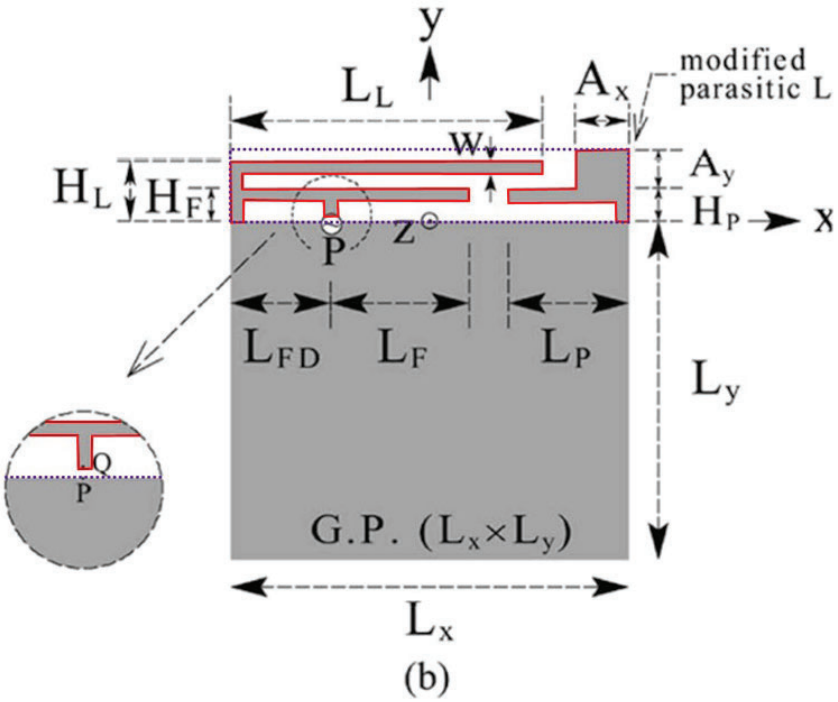

Nakano, Fig. 1(b) (annotated)

~~CONFIDENTIAL - PROTECTIVE ORDER MATERIAL~~

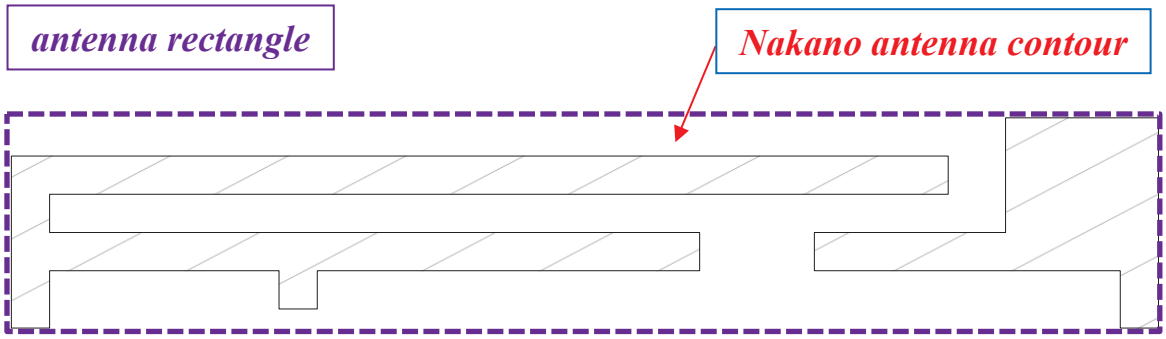

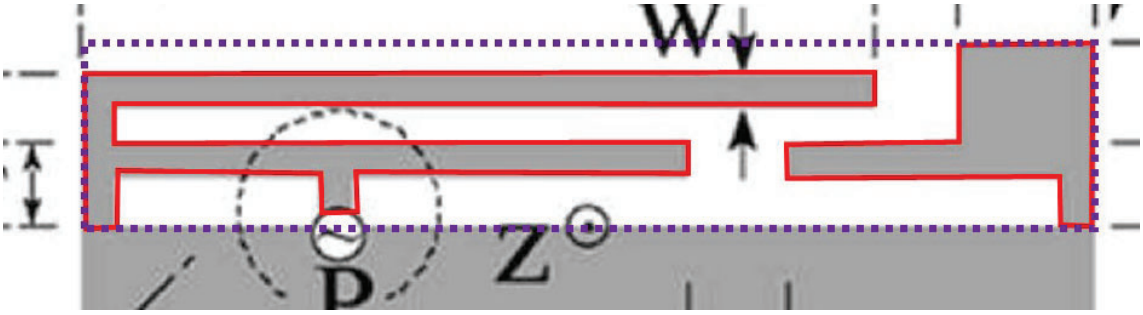

Nakano, Fig. 1(b) (annotated detail)

249. A properly scaled rendering of Nakano's "antenna contour" can be generated using the dimensions provided in Nakano (detailed below). Nakano, Fig. 1(b), 2418, Figs. 4-6.

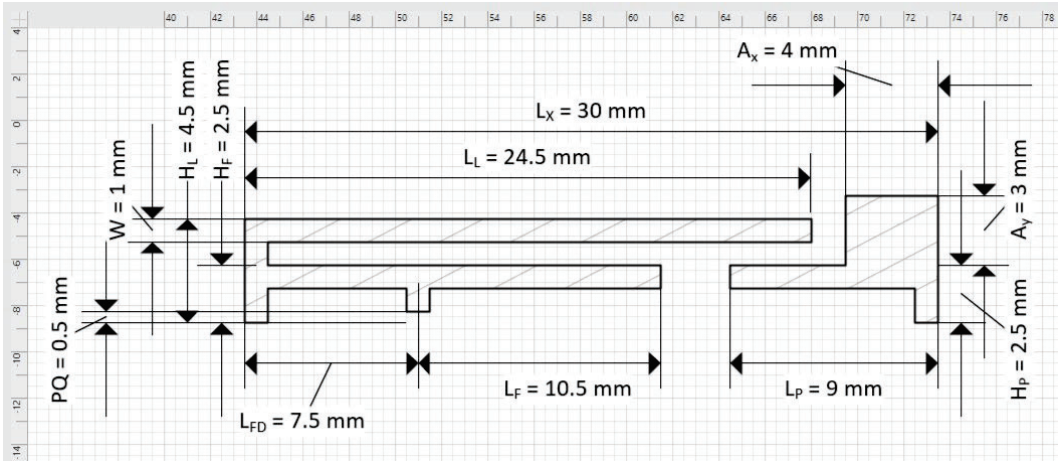

~~CONFIDENTIAL - PROTECTIVE ORDER MATERIAL~~

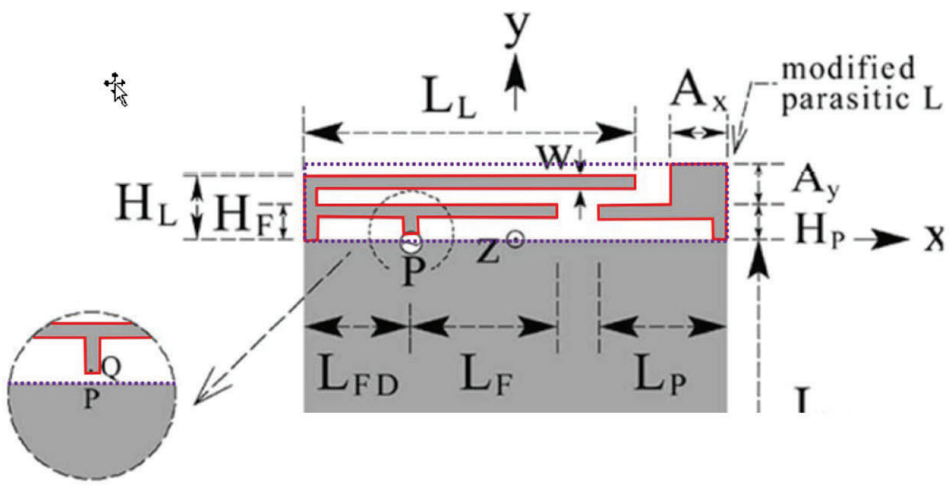

250. The Nakano antenna's structure has a left portion and a right portion. The left portion is based on a combination of an inverted L element and an inverted F element, and "hence it is referred to as the inverted FL antenna (InvFL)." Nakano, 2418. The right portion is based on a "parasitic inverted L element (simply referred to as a parasitic L element)." Nakano, 2418-2419. Nakano refers to straight sub-portions of these radiation elements as "strip lines" and provides their dimensions. *See* Nakano 2417 (describing the structure of the radiation elements as "inverted F and L strip lines"), 2418 (providing dimensions of the strip lines, such as "strip line width," "strip line lengths," and their "heights"), 2419 (explaining "widening of the strip width" of the parasitic L element), Figs. 4-6 (providing dimensions in texts under the figures).

251. Nakano states that the "strip line width of the radiation element [is] fixed to be… w = 1 mm." Nakano, 2418. Therefore, each strip line sub-portion has the width of 1 mm, as annotated below. The only exception is that part of the

~~CONFIDENTIAL - PROTECTIVE ORDER MATERIAL~~

horizontal strip width of the parasitic L element [highlighted in purple below] is widened to tune VSWR "by making a protrusion [highlighted in orange below] on the parasitic L element." Nakano, 2419. The dimensions of the protrusion are specifically provided as A_x = 4 mm and A_y = 3 mm. 2418 (describing "a small protrusion of area $A_x \times A_y$"); 2419-2420, Figs. 4-6.

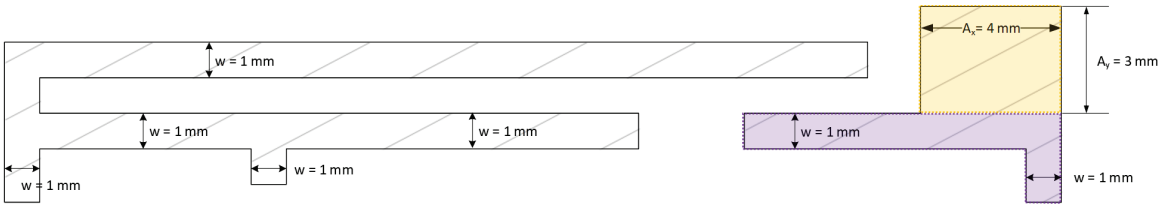

2. Limitation [11.b]

11.b	wherein the third antenna contour has a level of complexity defined by complexity factor F_{21} having a value of at least 1.20 and complexity factor F_{32} having a value of at least 1.35.

252. Dou+Ciais-Quadband+Nakano meets [11.b] because as shown below the InvFL antenna contour ("*third antenna contour*") meeting [11.a] has *complexity factor* F_{21} = 1.49 ("*at least 1.20*") and F_{32} = 1.46 ("*less than 1.75*").

a. Calculating F_{21}

i. Grid G_2

253. Nakano's InvFL antenna has a 30 mm × 5.5 mm antenna rectangle (purple outline below).

~~CONFIDENTIAL - PROTECTIVE ORDER MATERIAL~~

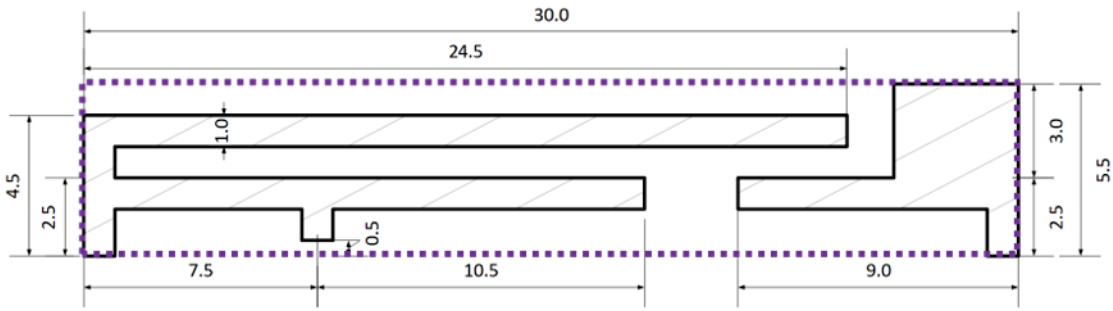

254. The ’677 specification states that grid G_2 is formed by tessellating the antenna contour with an odd number of rows and columns. EX1001, 17:18-22. The specification does not require using only nine columns. EX1020, 27 (“[A] skilled artisan would not understand the patent to require G2 to be constructed using 9 columns. To the contrary, the patents expressly contemplate the use of a different number of columns.”); *see also* EX1001, 17:18-22 (“the size of a cell and its aspect ratio… are first chosen so that the antenna rectangle is perfectly tessellated with an odd number of columns and an odd number of rows.”); 17:39-42 (explaining “setting to nine (9) the number of columns that tessellate the antenna rectangle provides an advantageous compromise, for the preferred sizes of [a wireless device],” but omitting any measurements for those “preferred sizes”).

255. Here, a grid G_2 with **15 columns** yields a cell width $\left(\frac{30\ mm}{15}\right) = 2$ mm.

~~CONFIDENTIAL - PROTECTIVE ORDER MATERIAL~~

256. Setting an odd number of "2n+1" rows with integer n such that $0 < n < 5$ yields these results, where aspect ratio is the ratio of cell width to cell height (EX1001, 17:65-67):

# rows	cell height (mm)	aspect ratio
3	$\left(\frac{5.5\ mm}{3}\right) = 1.83$	$\left(\frac{2}{1.83}\right) = 1.09$
5	$\left(\frac{5.5\ mm}{5}\right) = 1.1$	$\left(\frac{2}{1.1}\right) = 1.82$

257. Therefore **three** rows provides grid cells "as square as possible," e.g., an aspect ratio closest to one. *Supra* §VIII.E.1.a (claim construction); EX1001, 16:62-65, 17:18-64. Thus, grid G_2 with **fifteen (15) columns** and **three (3) rows** has cells "as square as possible[.]"

ii. N_2 = 45

258. Below the 3 x 15 grid G_2 (blue outline) tessellates the *antenna rectangle* bounding the quadband *antenna contour*. Each cell "include[s] at least a point of the antenna contour," so that the G_2 cell count $\boldsymbol{N_2} = 45$. *Supra* §VIII.E.2.a; EX1001, 19:1-7.

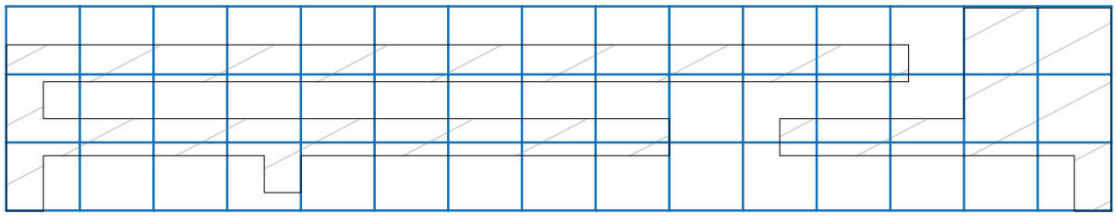

iii. Grid G_1

~~CONFIDENTIAL - PROTECTIVE ORDER MATERIAL~~

259. The InvFL antenna feed for the lowest frequency operation at point Q is closest to the bottom left corner ("feed point corner") of the *antenna rectangle*. Nakano, Fig. 1, 2417-2418 ("feed point location L_{FD}"). Grouping four G_2 cells (blue grid lines) into a single G_1 cell results in the 2 x 8 grid G_1 shown below (orange grid lines).

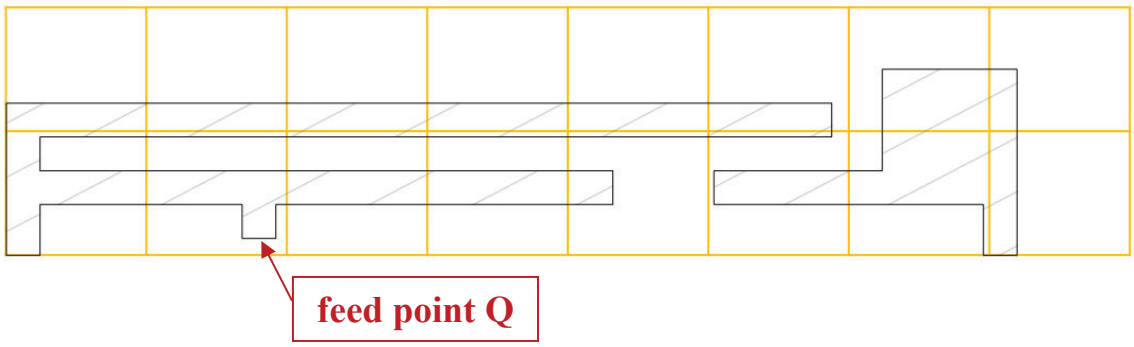

iv. N_1 = 16

260. Each G_1 cell "include[s] at least a point of the antenna contour." *Supra* §VIII.E.2.a; EX1001, 19:1-7. Thus, the G_1 cell count $\boldsymbol{N_1} = 16$.

v. Calculation F_{21} = 1.49

261. The complexity factor F_{21} for the InvFL antenna contour is thus:

$$\boldsymbol{F_{21}} = -\left(\frac{\log(N_2) - \log(N_1)}{\log(1/2)}\right) = -\left(\frac{\log(45) - \log(16)}{(-1)\log(2)}\right)$$

$$= \left(\frac{\log\left(45/16\right)}{\log(2)}\right) = \left(\frac{0.449}{0.301}\right) = 1.49.$$

Supra §VIII.E.2.a; EX1001, 19:8-14.

~~CONFIDENTIAL - PROTECTIVE ORDER MATERIAL~~

b. Calculating F_{32}

i. Grid G_3

262. Grid G_3 is 6 rows by 30 columns so that four G_3 cells comprise a single G_2 cell. *Supra* §VIII.E.1.c; EX1001, 19:51-60. The G_3 cells have width $\left(\frac{30\ mm}{30}\right) = 1$ mm and height $\left(\frac{5.5mm}{6}\right) = 0.917$ mm.

ii. $N_3 = 124$

263. As shown below 56 G_3 cells (shaded yellow) do ***not*** "include at least a point of the antenna contour." *Supra* §VIII.E.2.b; EX1001, 19:61-67. Thus, the G_3 cell count $\boldsymbol{N_3} = (180 - 56) = 124$.

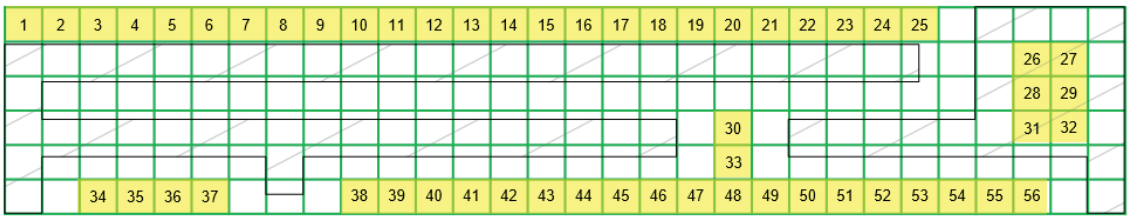

264. In case it is not immediately obvious, I further explain whether certain cells "include at least a point of the antenna contour," based on the below annotated figure. *Supra* §VIII.E.2.b; EX1001, 19:61-67.

265. The horizontal *antenna contour* segment ("Antenna contour segment 1" in red below) at top left is 1 mm (strip line width w, as explained *supra* §X.E.1 for [11.a]) from the top of the *antenna rectangle* and thus not contained within cells numbered 1-25, which only extend 0.917 mm (a G_3 cell height) from the top

~~CONFIDENTIAL - PROTECTIVE ORDER MATERIAL~~

of the *antenna rectangle*. Therefore, cells 1-25 do ***not*** "include at least a point of the antenna contour."

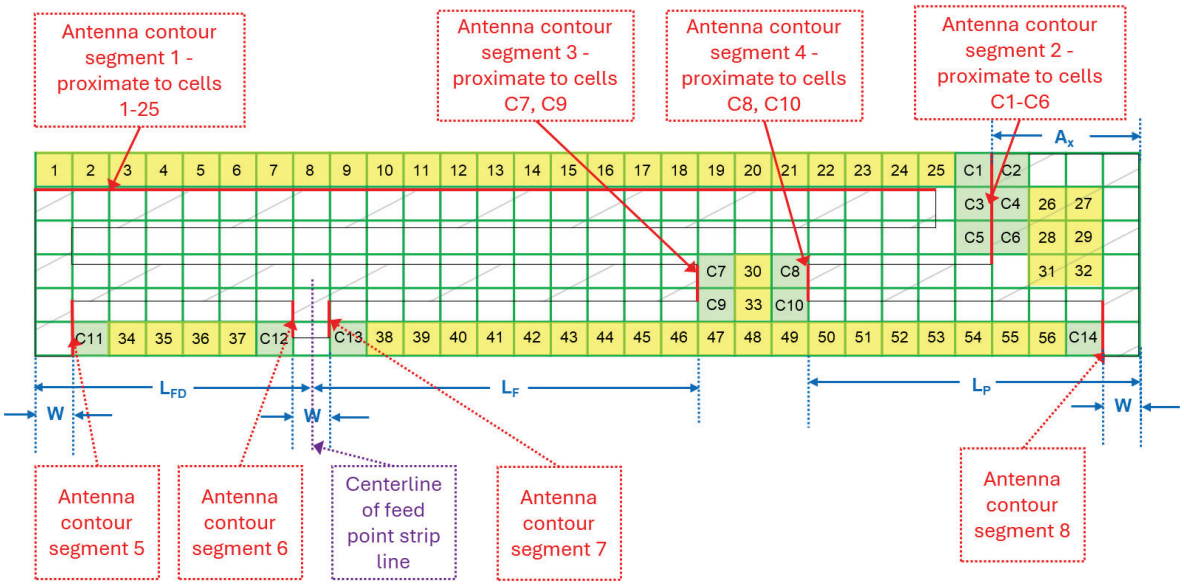

266. The '677 patent states that "in the present invention the boundary of the cell is also part of the cell[.]" EX1001, 19:4-5. Thus, even if a grid cell only includes points of the antenna contour on its cell boundary, *e.g.*, the antenna contour matches the cell boundary and doesn't further extend into the cell, the cell "include[s] at least a point of the antenna contour." Here, the right edges of cells C1, C3, and C5 and the left edges of cells C2, C4, and C6 are 1 × 4 = 4 mm from right edge of the antenna rectangle. The proximate *antenna contour* segment ("Antenna contour segment 2" in red above) is spaced from the right edge of *antenna rectangle* by A_x = 4 mm. *Supra* §X.E.1 (discussing dimensions in Nakano). Therefore, the right edges of cells C1, C3, and C5 and the left edges of

~~CONFIDENTIAL - PROTECTIVE ORDER MATERIAL~~

cells C2, C4, and C6 match the left edge of the proximate "Antenna contour segment 2," and thus "include at least a point of the antenna contour."

267. The left edges of cells C7 and C9 are spaced from left edge of *antenna rectangle* by 1 × 18 = 18 mm (eighteen times the G_3 cell width). The proximate *antenna contour* segment ("Antenna contour segment 3" in red below) is spaced from the left edge of *antenna rectangle* by $L_{FD}+L_F$ = 7.5+10.5 = 18 mm. *Supra* §X.E.1 ([11.a]). The left edges of cells C7 and C9 thus match *antenna contour*'s "segment 3," and cells C7 and C9 therefore "include at least a point of the antenna contour."

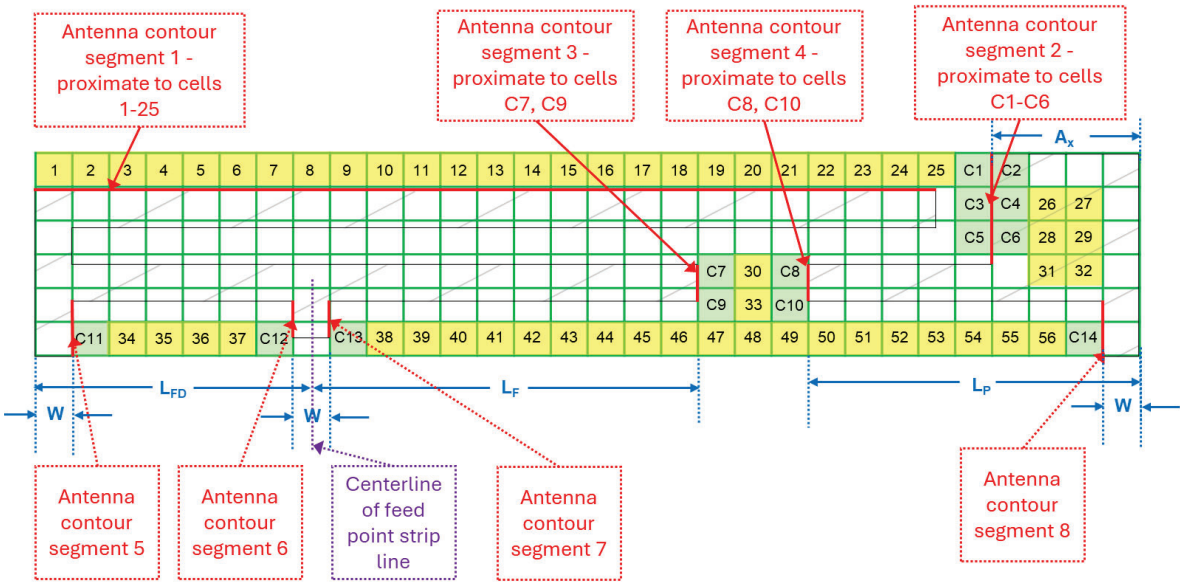

268. The right edges of cells C8 and C10 are apart from right edge of *antenna rectangle* by 1 × 9 = 9 mm (nine times the G_3 cell width). The proximate *antenna contour* segment ("Antenna contour segment 4" in red below) is apart from the right edge of *antenna rectangle* by L_P = 9 mm. *Supra* §X.E.1 ([11.a]).

~~CONFIDENTIAL - PROTECTIVE ORDER MATERIAL~~

The right edges of cells C8 and C10 thus match *antenna contour*'s "segment 4," and thus cells C8 and C10 "include at least a point of the antenna contour."

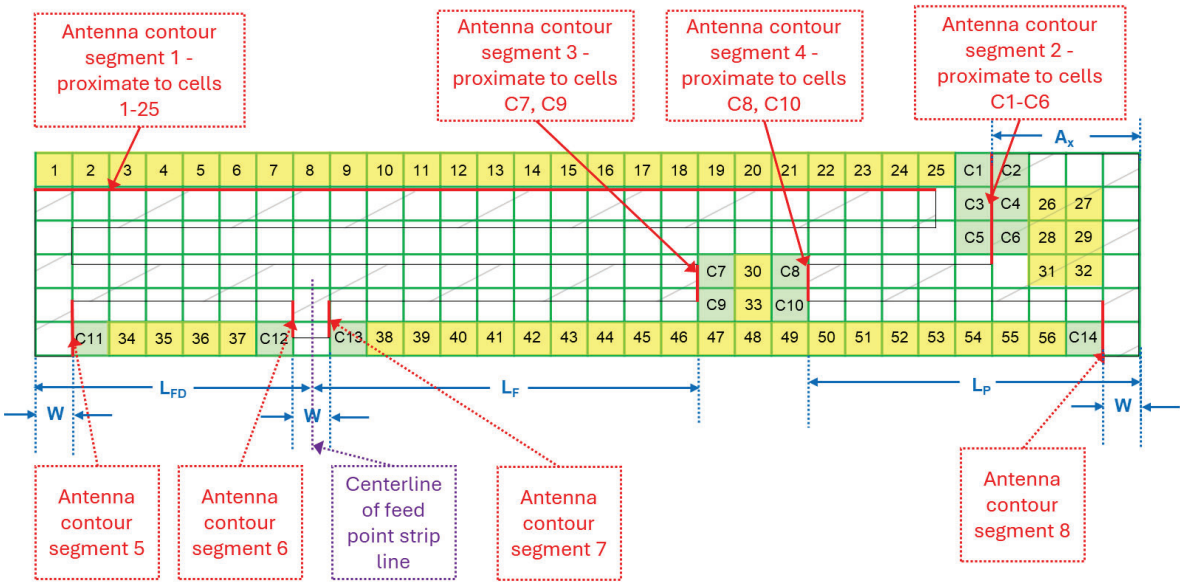

269. The left edge of cell C11 is apart from left edge of *antenna rectangle* by 1 mm (a G_3 cell width). The proximate *antenna contour* segment ("Antenna contour segment 5" in red) is offset from the left edge of *antenna rectangle* by w = 1 mm. *Supra* §X.E.1 ([11.a]). The left edge of cell C11 thus matches *antenna contour*'s "segment 5," and therefore cell C11 "include[s] at least a point of the antenna contour."

270. The right edge of cell C12 is apart from left edge of *antenna rectangle* by 1 × 7 = 7 mm (seven times the G_3 cell width). The proximate *antenna contour* segment ("Antenna contour segment 6" in red below) is apart from the left edge of *antenna rectangle* by $L_{FD} – 1/2\times w = 7.5 – 1/2 \times 1 = 7.5\text{-}0.5 = 7$ mm. *Supra* §X.E.1 ([11.a]). The half of line strip width ("1/2×w") needs to be subtracted from L_{FD}

~~CONFIDENTIAL - PROTECTIVE ORDER MATERIAL~~

because, the right end of "feed point location" "distance L_{FD}" is at the vertical centerline (annotated in purple below) of the feed point strip line portion, splitting the width of the feed point strip line into two halves (*i.e.*, each being "1/2×w"). The right edge of cell C12 thus matches *antenna contour*'s "segment 6," and thus cell C12 "include[s] at least a point of the antenna contour."

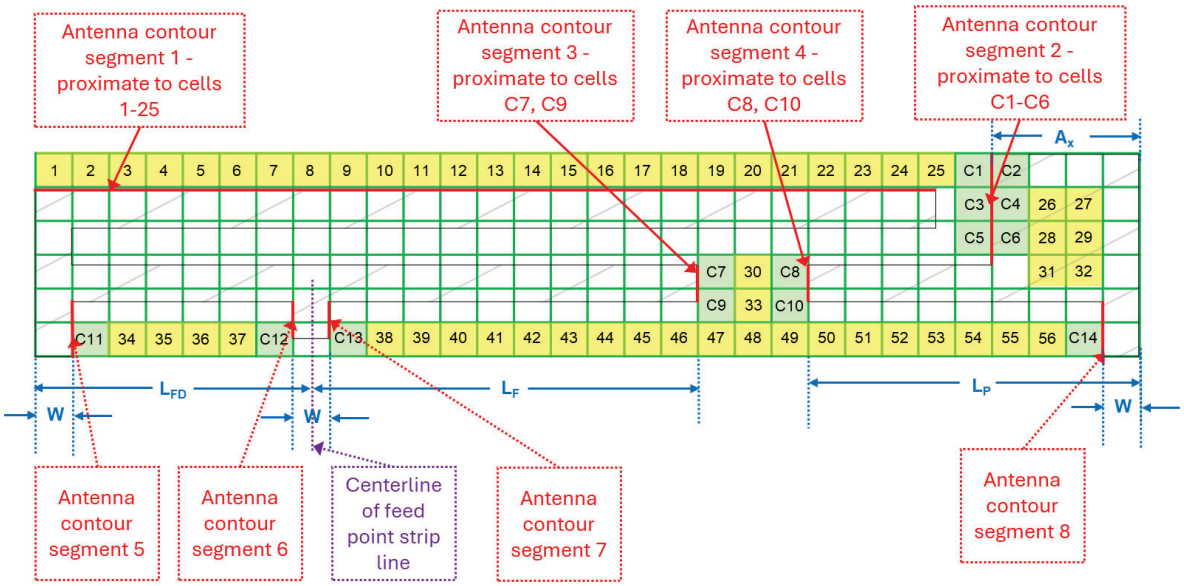

271. The left edge of cell C13 is offset from left edge of *antenna rectangle* by 1 × 8 = 8 mm (eight times the G_3 cell width). The proximate *antenna contour* segment ("Antenna contour segment 7" in red below) is offset from the left edge of *antenna rectangle* by L_{FD} + 1/2×w = 7.5 + 1/2 × 1 = 7.5+0.5 = 8 mm. *Supra* §X.E.1 ([11.a]). The half of line strip width ("1/2×w") needs to be added to L_{FD} because, the right end of "feed point location" "distance L_{FD}" is at the vertical centerline (annotated in purple below) of the feed point strip line portion, splitting the width of the feed point strip line into two halves (*i.e.*, each being "1/2×w").

~~CONFIDENTIAL - PROTECTIVE ORDER MATERIAL~~

The left edge of cell C13 thus matches *antenna contour*'s "segment 7," and thus cell C13 "include[s] at least a point of the antenna contour."

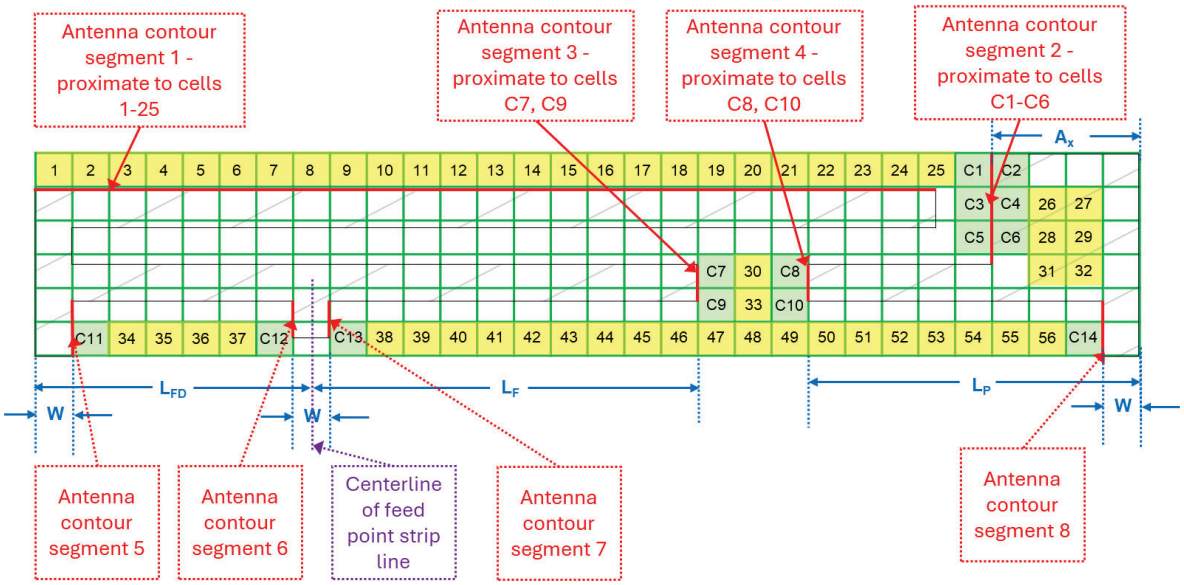

272. The right edge of cell C14 is offset from right edge of *antenna rectangle* by 1 mm (a G_3 cell width). The proximate *antenna contour* segment ("Antenna contour segment 8" in red below) is offset from the right edge of *antenna rectangle* by w = 1 mm. *Supra* §X.E.1 ([11.a]). The right edge of cell C14 thus matches *antenna contour*'s "segment 8," and thus cell C14 "include[s] at least a point of the antenna contour."

~~CONFIDENTIAL - PROTECTIVE ORDER MATERIAL~~

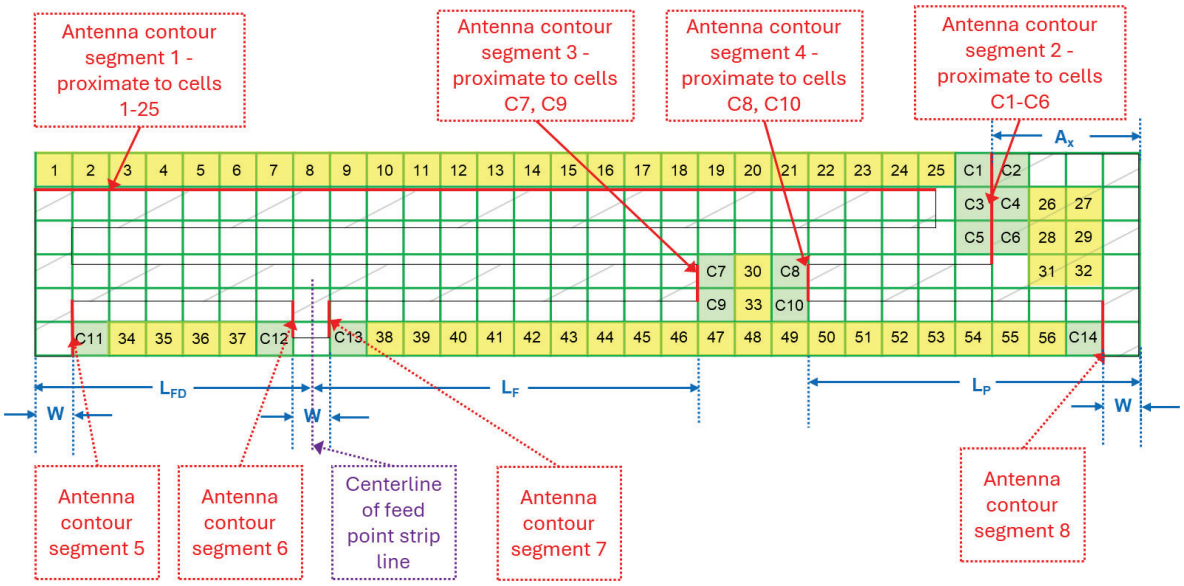

iii. Calculation $F_{32} = 1.46$

273. The complexity factor F_{32} for the quadband antenna contour is thus:

$$\boldsymbol{F_{32}} = -\left(\frac{\log(N_3) - \log(N_2)}{\log(1/2)}\right) = -\left(\frac{\log(124) - \log(45)}{(-1)\log(2)}\right)$$

$$= \left(\frac{\log\left(124/45\right)}{\log(2)}\right) = \left(\frac{0.440}{0.301}\right) = 1.46.$$

Supra §VIII.E.2.b; EX1001, 20:1-5.

F. Claim 12

1. Preamble [12.PRE], Limitations [12.a]-[12.b], [12.d]-[12.f]

274. Claim 12 repeats many limitations from previous claims. Dou+Ciais-Quadband+Nakano meets [12.PRE]-[12.b] and [12.d]-[12.f] for the same reasons Dou+Ciais-Quadband meets the corresponding limitations below, wherein Dou antenna 206 is a Ciais quadband antenna ("*first antenna*"). EX1028, 4-5.

~~CONFIDENTIAL - PROTECTIVE ORDER MATERIAL~~

Limitation	Corresponding Limitation	Discussed (*supra*)
[12.PRE]	[1.PRE]	§IX.D.1
[12.a]	[1.a]	§IX.D.2
[12.b]	[1.b]	§IX.D.3
[12.d]	[1.d]	§IX.D.5
[12.e]	[1.e]	§IX.D.6
[12.f]	[1.f]	§IX.D.7

275. Dou+Ciais-Quadband+Nakano meets the remaining limitations in claim 12 as follows.

2. Limitation [12.c]

12.c	a first antenna within the wireless device and configured to provide operation in at least four frequency bands, at least one of the at least four frequency bands is contained within a first frequency range and at least one other of the four frequency bands is contained within a second frequency range,

276. Dou+Ciais-Quadband+Nakano meets [12.c] because Ciais's quadband antenna (*first antenna*) is disposed within Dou's device and is "*configured to provide operation*" in at least **25** frequency bands as explained *supra* §IX.D.4 ([1.c]). The quadband antenna covers a *first frequency range* **870-960 MHz** (supporting at least 4 frequency bands) and a *second frequency range* **1710-2170 MHz** (supporting at least 21 frequency bands). *Id.*

~~CONFIDENTIAL - PROTECTIVE ORDER MATERIAL~~

3. Limitation [12.g]

12.g	wherein the first antenna is configured to transmit and receive signals from a 4G communication standard; and

277. Dou+Ciais-Quadband+Nakano meets [12.g] because the Ciais quadband antenna is operable to "*transmit and receive*" signals that correspond to a "*4G communication standard*" as explained *supra* §IX.D.5 ([1.d]), and for the reasons that the quadband antenna (as a *third antenna* in claim 4) meets claim 4 (*receive signals…*) *supra* §IX.G. *Supra* §VIII.G (claim construction); Ciais-Quadband,148 ("antenna ***can operate*** from 880 to 960 MHz and 1710-2170 MHz").

4. Limitation [12.h]

12.h	a second antenna within the wireless device and configured to receive signals from a 4G communication standard,

278. Dou+Ciais-Quadband+Nakano meets [12.h] because Nakano's InvFL antenna (*second antenna*) covers (*is configured to receive signals*) "2.45 GHz" (e.g., 2400-2500 MHz) and 5.2 GHz, which are "frequencies used for wireless LAN communications." Nakano, 2417. The WLAN standards (e.g., EX1042 (IEEE Std. 802.11a), EX1043 (IEEE Std. 802.11b))—which are used for "WiFi" (EX1001, 25:1-6)—are "*4G communication standards*" (*supra* §VIII.G.1), as Fractus argued in litigation (*supra* §VIII.G.2). EX1001, 10:14-23 ("WiFi

~~CONFIDENTIAL - PROTECTIVE ORDER MATERIAL~~

(IEEE802.11 standards)"); 25:1-18 (WiFi is "4G service" corresponding to a "4G standard[]").

5. Limitation [12.i]

12.i	a minimum-sized parallelepiped of rectangular faces that completely encloses a volume of the second antenna defining an antenna box,

279. Limitation [12.i] recites the specification's definition of "*antenna box*." *Supra* §VIII.B. Dou+Ciais-Quadband+Nakano meets [12.i] because a POSA could define an "*antenna box*" comprising "*a minimum-sized parallelepiped of rectangular faces that completely encloses a volume*" of Nakano's InvFL antenna with planar dimensions as described in Nakano and thickness of a conventional ground plate (e.g., the thickness of Dou's ground plane 210).

6. Limitation [12.j]

12.j	an orthogonal projection of the antenna box along a normal to a face with a largest area of the second antenna defining an antenna rectangle,

280. Limitation [12.j] recites the specification's definition of "*antenna rectangle*." *Supra* §VIII.C. Dou+Ciais-Quadband+Nakano meets [12.j] because Nakano's InvFL antenna has an "*antenna contour*" as explained *supra* §X.E.1

~~CONFIDENTIAL - PROTECTIVE ORDER MATERIAL~~

([11.a]), and the *antenna contour* is bounded by an *antenna rectangle* and is formed by *orthogonal projection* through the *antenna box* meeting [12.i].

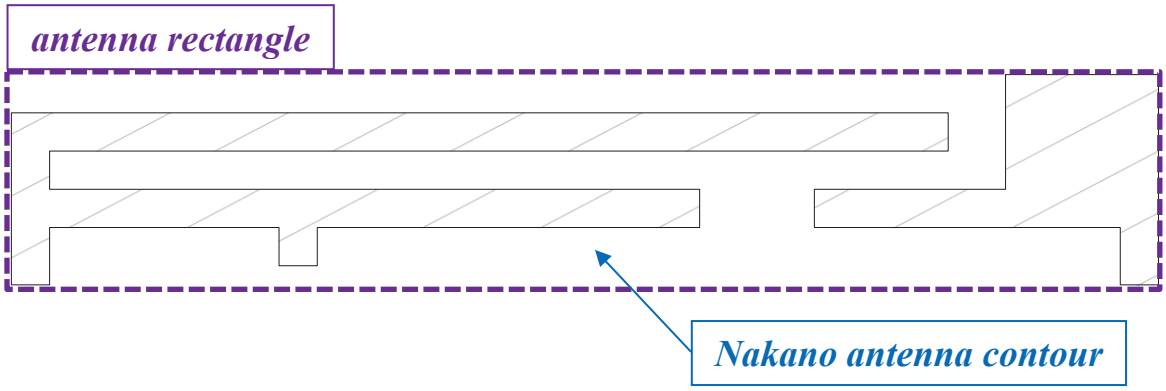

7. Limitation [12.k]

12.k	an aspect ratio of the antenna rectangle being defined as a ratio between a width and a height of the antenna rectangle, and wherein the aspect ratio has a value of at least 2.

281. Dou+Ciais-Quadband+Nakano meets [12.k] because the InvFL antenna's 30 mm × 5.5 mm *antenna rectangle* (purple outline below) has an "*aspect ratio*" $\left(\frac{30}{5.5}\right) = 5.45 > 2$. Nakano, Fig. 1, 2417-2418.

~~CONFIDENTIAL - PROTECTIVE ORDER MATERIAL~~

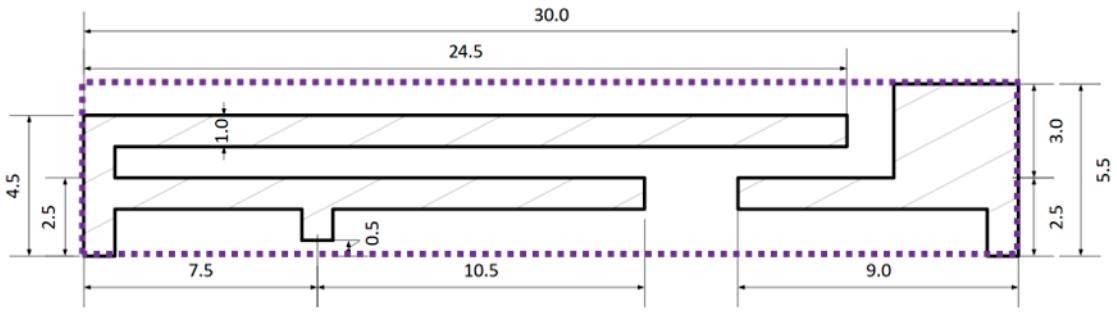

G. Claims 13-14

13	[Claim 12's device], wherein the first antenna contour comprises at least 20 segments.
14	[Claim 13's device], wherein the first antenna contour comprises at least 35 segments.

282. Dou+Ciais-Quadband+Nakano meets claim 13 for the same reasons that Dou+Ciais-Quadband meets claim 2, *supra* §IX.E. It meets claim 14 for the reasons Dou+Ciais-Quadband meets the additional limitations in claim 8, *supra* §IX.J.

H. Claim 15

15	[Claim 12's device], wherein the second antenna is proximate to a second short side of the ground plane rectangle that is opposite to the first short side of the ground plane rectangle.

283. Dou+Ciais-Quadband+Nakano meets claim 15 because Nakano's InvFL extends from a "co-planar ground plate" on the "*short side*" of a rectangular "card-type structure." Nakano, 2417, Fig. 1. A POSA would have preserved this placement in Dou's wireless device by placing the InvFL antenna coplanar with ground plane 210 (Dou, Fig. 2B) and extending it from the "*second short side*" of

~~CONFIDENTIAL - PROTECTIVE ORDER MATERIAL~~

the *ground plane rectangle* (which is *opposite to the first short side*) enclosing the ground plane, similar to Dou's Figure 3B laterally offsetting antenna 208 below ground plane 310. *Supra* §IX.D.6 ([1.e]); Dou, Figs. 2A-2B (modified below), [0016]-[0017].

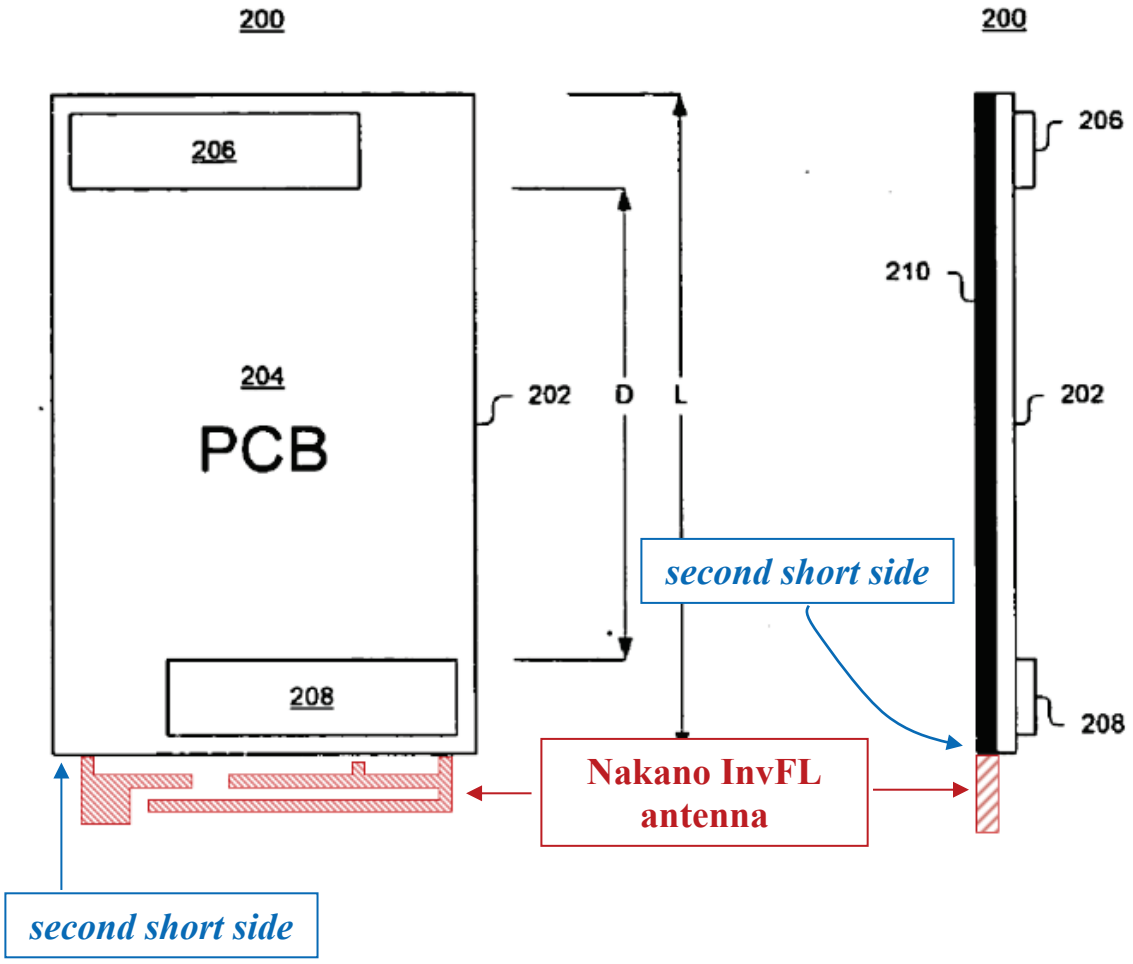

~~CONFIDENTIAL - PROTECTIVE ORDER MATERIAL~~

I. Claim 16

16.a	[Claim 12's device], wherein the second antenna defines a second antenna contour comprising an entire perimeter of the second antenna, and
16.b	wherein the second antenna contour has a level of complexity defined by complexity factor F_{21} having a value of at least 1.20 and complexity factor F_{32} having a value of at least 1.35.

284. Claim 16 depends from claim 12 and repeats the antenna limitations in claim 11. Dou+Ciais-Quadband+Nakano meets the claim 16 and limitations [16.a], [16.b] for the reasons that Nakano's InvFL antenna (as claim 16's "*second antenna*") meets claim 11 and limitations [11.a] and [11.b] (as claim 11's "*third antenna*") *supra* §X.E.

J. Claim 17

17	[Claim 16's device], wherein the second antenna contour comprises at least 20 segments.

285. Dou+Ciais-Quadband+Nakano meets claim 17 because the InvFL antenna ("*second antenna*) has an *antenna contour* with more than 20 segments as shown below.

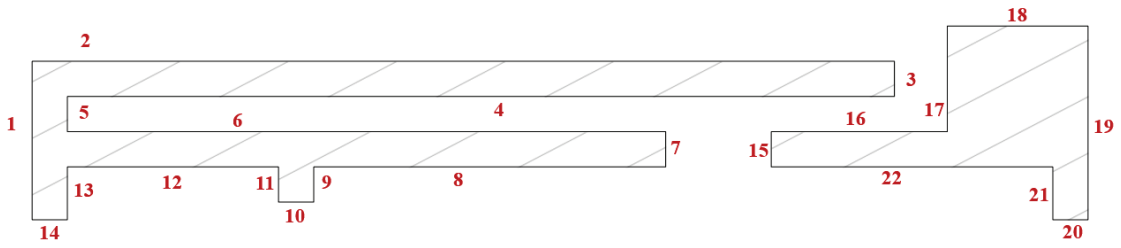

~~CONFIDENTIAL - PROTECTIVE ORDER MATERIAL~~

K. Claim 18

18	[Claim 12's device], wherein the antenna system comprises a third antenna configured to provide wireless connectivity in at least two frequency bands.

286. Dou+Ciais-Quadband+Nakano meets claim 18 because it implements Dou's antenna 208 with a second Ciais quadband antenna ("*third antenna*"). *Supra* §X.A.2 (combination). The quadband antenna provides "*wireless connectivity*" in at least 25 frequency bands as explained *supra* §IX.D.4 ([1.c]).

L. Claim 19

19.a	[Claim 18's device], wherein the third antenna defines a third antenna contour comprising an entire perimeter of the third antenna, and
19.b	wherein the third antenna contour has a level of complexity defined by complexity factor F_{21} having a value of at least 1.20 and complexity factor F_{32} having a value of at least 1.35.

287. Claim 19 repeats the additional limitations in claim 5. EX1028, 10. Dou+Ciais-Quadband+Nakano meets claim 19 for the same reasons it meets claim 5 *supra* §IX.H, wherein the second Ciais quadband antenna is the "*third antenna*."

M. Claim 20

20	The wireless device of claim 18, wherein the third antenna is proximate to a third side of the antenna rectangle being orthogonal to the first short side.

~~CONFIDENTIAL - PROTECTIVE ORDER MATERIAL~~

288. Claim 20 depends from claim 18, which depends from claim 12. The antecedent for "*antenna rectangle*" is the ***second*** (e.g., Nakano's InvFL) antenna's *antenna rectangle* in Limitation [12.j] *supra* §X.F.6.

289. Claims 18 and 12 provide no antecedent basis for claim 20's "*side*" of "*the* [Nakano InvFL] *antenna rectangle*" or for "*the first short side*."

290. Regardless, Dou+Ciais-Quadband+Nakano meets claim 20 under any reasonable construction. If "*the first short side*" refers to a short side of Dou's PCB 204 or a *ground plane rectangle* that it defines, then Dou antenna 208 (the second Ciais quadband antenna or "*third antenna*") is disposed adjacent ("*proximate*") to a ***long*** edge of the PCB as shown below, and—because the PCB is a rectangular—the long edge is orthogonal to the "short" edge. *Supra* §§X.A.2 (combination), X.E.1 ([11.a], InvFL *antenna rectangle*).

291. If "*the first short side*" refers to a short side of the InvFL antenna's *antenna rectangle*, then Dou antenna 208 is disposed adjacent ("*proximate*") to the long edge of the InvFL *antenna rectangle*, which is parallel to the short edge of PCB 204.

~~CONFIDENTIAL - PROTECTIVE ORDER MATERIAL~~

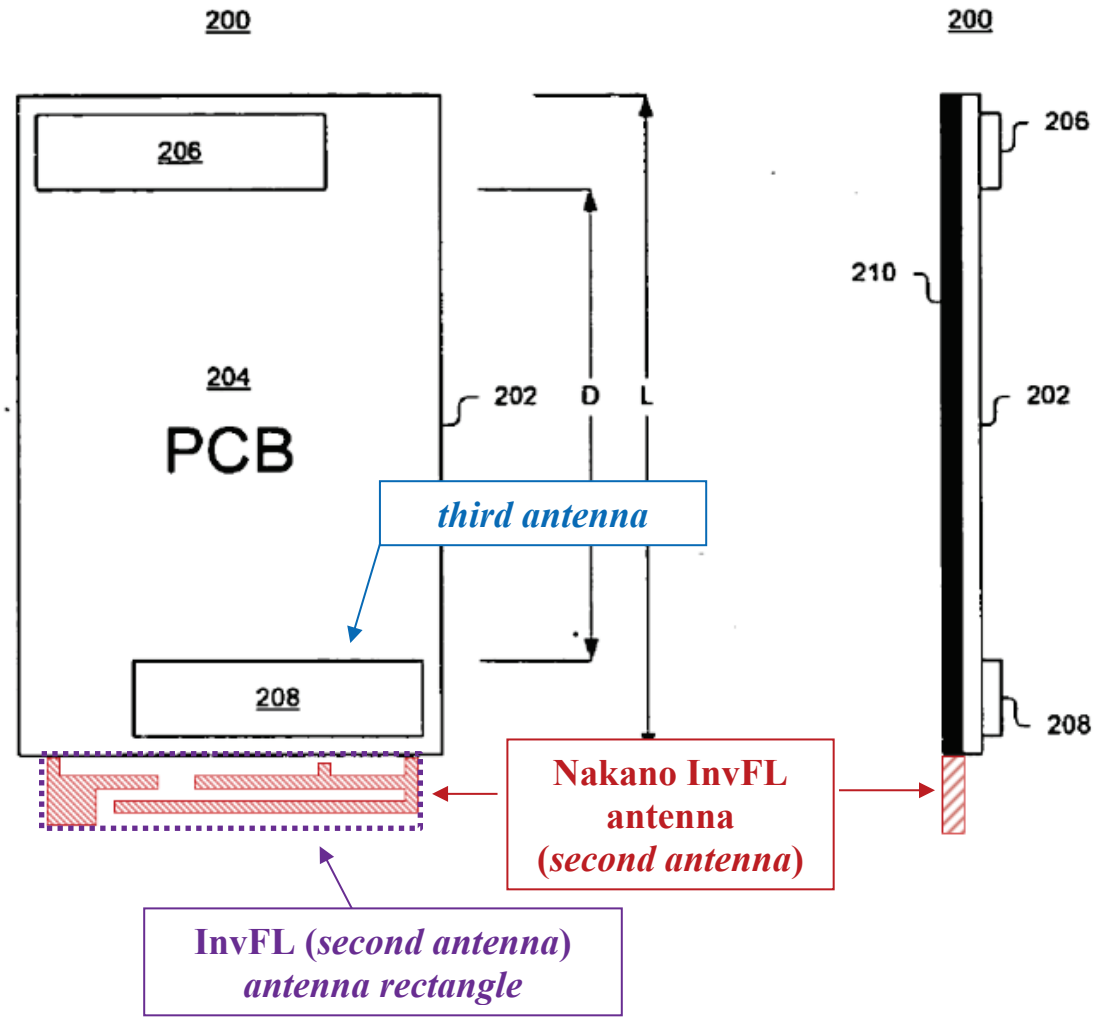

~~CONFIDENTIAL - PROTECTIVE ORDER MATERIAL~~

XI. GROUND 3: BALIARDA-543 ANTICIPATES AND/OR RENDERS OBVIOUS CLAIMS 1-5 AND 12-20

A. Claims 1-5 and 12-20 Are Not Entitled To Priority Before April 7, 2014.

292. I was asked to form an opinion whether a POSA reading the description with the four corners of U.S. Patent Application No. 11/614,429 ("the '429 application") on **December 21, 2006** would have concluded that the description reasonably conveyed that the applicants possessed the idea of an antenna operating at frequency ranges associated with the frequency bands of LTE including LTE bands 12, 13, and 14 between 698 and 806 MHz.

293. In my opinion, a POSA would not have concluded that the applicants "had possession of the claimed subject matter" in Challenged Claims 1-5 and 12-20 on December 21, 2006, because on that date the LTE standard had not been completed and none of the LTE frequency bands had been defined. As a result, on December 21, 2006 nobody—not the applicants, not a POSA—could have determined whether a wireless device had an antenna that covered or sent or received signals associated with the LTE standard, as later claimed.

294. The '429 application published January 24, 2008 as EX1040, U.S. Patent Pub. No. 2008/018543 ("Baliarda-543"). For simplicity, in the analysis below I refer to Baliarda-543 when evaluating the '429 application's written description.

~~CONFIDENTIAL - PROTECTIVE ORDER MATERIAL~~

295. The claims require antennas that are capable of transmitting/receiving signals for 4G communication as specified in "4G communication standards" as follows. These are, collectively, the "4G limitations" or "4G terms."

- ***Claims 1-5***: an antenna—having particular complexity factors (e.g., [1.f])—that is "*configured to support*" a "*frequency band*" that is "*associated with a 4G communication standard*"

1.c	***a first antenna*** within the wireless device and ***configured to support at least three frequency bands*** contained within first and second frequency ranges of the electromagnetic spectrum,
1.d	the second frequency range being higher in frequency than the first frequency range and ***at least one of the three frequency bands being associated with a 4G communication standard***,

- ***Claims 4-5***: an antenna that is "*configured to receive signals employing a 4G communication standard*"

4	The wireless device of claim 1, wherein the antenna system comprises a ***third antenna configured to receive signals employing a 4G communication standard***.

- ***Claims 12-20***: a ***first*** antenna—with particular complexity factors (e.g., [12.f])—that is "*configured to transmit and receive signals from a 4G communication standard*," and a ***second*** antenna—with particular aspect ratio (e.g., [12.k]) and complexity factors (e.g., [16.b])—that is "*configured to receive signals from a 4G communication standard*"

~~CONFIDENTIAL - PROTECTIVE ORDER MATERIAL~~

12.g	wherein the ***first antenna*** is ***configured to transmit and receive signals from a 4G communication standard***; and
12.h	a ***second antenna*** within the wireless device and ***configured to receive signals from a 4G communication standard***,

296. As Fractus alleges in litigation, and explained above, LTE is a "wireless standard" for "4G services," meeting "*4G communication standard*." *Supra* §VIII.G.2. Thus, an LTE band is a "*frequency band associated with a 4G communication standard*." *Supra* §VIII.G.2.

297. The '429 application has no written description showing that the applicants on December 21, 2006 possessed the idea of a device having antennas meeting these 4G limitations wherein the 4G communication standard is LTE, or an antenna—having claimed complexity factors or aspect ratio—supporting LTE communications at any then-undefined LTE band, let alone LTE bands within the 698 to 806 MHz spectrum allocated to television.

298. The '429 application has no written description of LTE frequency bands or the 3GPP Technical Specification 36.101 V8.4.0 (2008-12)—published years ***after*** the '429 application's filing—that defines LTE and its frequency bands. Baliarda-543; EX1025, EX1026, 7 (LTE specification completed in March 2009); EX1039, 497-502.

299. In December 2006, there were discussions ongoing about 4G but what a 4G communication system would look like was undefined. Only years later did

~~CONFIDENTIAL - PROTECTIVE ORDER MATERIAL~~

ITU's IMT-Advanced in Report ITU-R M.2134, adopted November 2008, define the requirements for a 4G communication system. EX1046. An LTE communication standard was not defined until years after the '429 application was filed. EX1025; EX1026, 7 (LTE specification completed March 2009).

300. In litigation, Fractus argued that the claimed "*4G communication standard*" is met by LTE. *Supra* §VIII.G.2.

301. The '429 application provides no description supporting the full scope of a "*frequency band… associated with a 4G communication standard*" ([1.d]), "*antenna configured to receive signals employing a 4G communication standard*" (claim 4), or "*antenna… configured to transmit and receive signals from a 4G communication standard*" ([12.g]) when the "*4G communication standard*" is interpreted to encompasses LTE. The '429 application provides no description of LTE, LTE frequency bands, or the 3GPP Technical Specification 36.101 V8.4.0 (2008-12)—published years ***after*** the '429 application's filing—that defines LTE and its frequency bands. Baliarda-543; EX1025; EX1026, 7 (LTE specification completed in March 2009); EX1039, 497-502.

302. On December 21, 2006, the LTE frequency bands ***had not even been defined*** and what frequency ranges they might eventually use was an "open issue." EX1038 (February 2007 report), 112 ("Open issues… Is the evolved access system envisioned to work on new and/or existing frequency band?"); EX1037

~~CONFIDENTIAL - PROTECTIVE ORDER MATERIAL~~

(November 2006 report), 108 (same); EX1036 (June 2006 report), 84 (same); EX1039, 497-502 (LTE frequency bands); EX1025 (December 2008 document defining LTE bands), EX1026, 7 (LTE specification completed in March 2009).

303. 3GPP archives the version history for TR 23.882 at https://www.3gpp.org/ftp/Specs/archive/23_series/23.882/ (visited May 22, 2025).

304. The 3GPP TR 23.882 development and change control status is described here: https://portal.3gpp.org/desktopmodules/Specifications/SpecificationDetails.aspx?specificationId=962 (visited May 22, 2025).

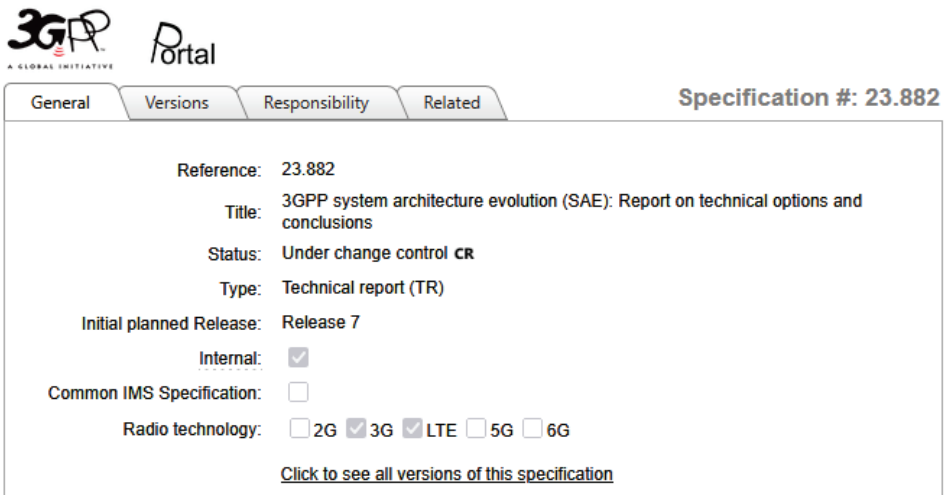

305. 3GPP summarizes the version releases, as relevant here, as follows at https://portal.3gpp.org/desktopmodules/Specifications/SpecificationDetails.aspx?specificationId=962 (visited May 22, 2025):

~~CONFIDENTIAL - PROTECTIVE ORDER MATERIAL~~

3GPP Portal

General | Versions | Responsibility | Related

Specification #: 23.882

Release 7(Spec is Withdrawn from this Release at SA#36)

Latest Remark: (2015-01-22) Timed out of Rel-7, though the governing WI is (as...

Meetings	Version	Upload date	Comment	
-	1.9.0	2007-04-03		ETSI TDoc CR
-	1.8.0	2007-02-21		ETSI TDoc CR
-	1.7.0			ETSI TDoc CR
-	1.6.1	2006-12-03		ETSI TDoc CR
-	1.6.0	2006-11-28		ETSI TDoc CR
-	1.5.0	2006-11-08		ETSI TDoc CR
-	1.4.2	2006-10-12		ETSI TDoc CR
RAN#33	1.4.1		RP-060613 for info	ETSI TDoc CR
-	1.4.0	2006-09-12		ETSI TDoc CR
-	1.3.0	2006-07-19		ETSI TDoc CR
-	1.2.3	2006-06-15		ETSI TDoc CR
-	1.2.2	2006-06-12		ETSI TDoc CR
-	1.2.1	2006-06-12		ETSI TDoc CR
-	1.2.0	2006-05-29		ETSI TDoc CR
-	1.1.0	2006-04-20		ETSI TDoc CR
SA#31	1.0.0	2006-03-20	SP-060152	ETSI TDoc CR

~~CONFIDENTIAL - PROTECTIVE ORDER MATERIAL~~

306. The archived versions cited herein are highlighted in the excerpted screen capture below.

www.3gpp.org / ftp / Specs / archive / 23_series / 23.882

	sort by name/desc	sort by date/desc	sort by size/desc
	23882-030.zip	2005/07/25 14:43	229,3 KB
	23882-040.zip	2005/09/15 16:20	116 KB
	23882-050.zip	2005/09/12 7:57	587,7 KB

* * *

	23882-122.zip	2006/05/30 14:33	5385,5 KB
	23882-123.zip	2006/06/15 8:45	2575 KB
	23882-130.zip	2006/07/19 13:51	5833,5 KB
	23882-140.zip	2005/09/12 13:31	6605,3 KB
	23882-142.zip	2006/10/12 7:00	6218,7 KB
	23882-150.zip	2006/11/08 8:51	6233,3 KB
	23882-160.zip	2006/11/27 15:12	6259,7 KB
	23882-161.zip	2006/11/30 15:15	6262,6 KB
	23882-180.zip	2007/02/21 17:33	6668,3 KB

307. 3GPP archived the three reports cited above on these dates, before and after the '429 application's December 21, 2006 filing date.

Exhibit	Document	3GPP archive date
EX1038	3GPP TR 23.882 V1.8.0 (2007-02)	2007-02-21
EX1037	3GPP TR 23.882 V1.6.1 (2006-11)	2006-11-30
EX1036	3GPP TR 23.882 V1.2.3 (2006-06)	2006-06-15

308. POSAs would have understood that LTE band 12 (699-716 MHz uplink and 728-746 MHz downlink, EX1039, 498 (Table 20.1))—whose uplink

~~CONFIDENTIAL - PROTECTIVE ORDER MATERIAL~~

portion Fractus ***expressly relies upon*** for meeting limitation [1.f] in its complaint in the Geotab Litigation (EX1024, 21)—is part of a frequency range (698-806 MHz) that ***was not even available for use with mobile communications*** (let alone LTE) until WRC-07 in October-November 2007—***nearly a year after*** Fractus's December 21, 2006 filing date for the '429 application. EX1041, 1 (WRC-07 took place in Geneva, Switzerland between October 22 and November 16, 2007); EX1039, 501 ("20.1.2 New frequency bands… ***WRC-07 identified additional frequency bands*** for IMT, which encompasses both IMT-2000 and IMT-Advanced. ***Several bands were defined by WRC-07*** that will be available partly or fully for deployment on a global basis:… ***698-806 MHz was allocated to mobile service*** and identified to IMT to some extent in all regions. Together with the band 806-960 MHz identified at WRC-2000, it forms a wide frequency range from 698 to 960 MHz that is partly identified to IMT in all regions, with some variations.").

309. Within this 698-806 MHz range defined for mobile communications at WRC-07, LTE bands 12, 13, and 14 (EX1039, 498 (Table 20.1)) were "defined for operation mainly for US allocations." EX1039, 501.

310. Moreover in July 2007, before WRC-07, the spectrum at 698-806 MHz (spanning the frequencies where LTE bands 12, 13, and 14 were later defined) was occupied by television broadcasters in TV Channels 52-69. EX1045, 3. In other words, when PO filed the '429 application on December 21, 2006 the

~~CONFIDENTIAL - PROTECTIVE ORDER MATERIAL~~

698-806 MHz frequency range was not available for use in any cellular communication, let alone LTE or 4G communication.

311. Because the LTE frequency band definition was an "open issue" and the frequency ranges for LTE bands had not been selected, a POSA reading the '429 application on December 21, 2006 would have concluded that the applicants did not possess a wireless device with an antenna configured to support an LTE frequency band (a "*frequency band[]… associated with a 4G communication standard*") or "*configured to transmit and receive*" LTE signals, e.g., "*signals from a 4G communication standard*," let alone one that also met the complexity factors and other requirements of the Challenged Claims. On December 21, 2006, when the '429 application was filed, no one could have determined whether any antenna disclosed in the application was configured to support a "*frequency band[] associated with*" LTE, or to send/receive LTE signals, because the LTE frequency bands had not yet even been defined.

312. When they filed the '429 application on December 21, 2006 ***not even the applicants***—let alone a POSA reading the '429 application's specification—could have determined whether an antenna was configured to operate at frequency ranges for a "*frequency band[] associated with*" LTE, or to send/receive LTE signals, because the LTE frequency bands were undefined. A POSA would have concluded that on December 21, 2006 the applicants did not possess the idea of

~~CONFIDENTIAL - PROTECTIVE ORDER MATERIAL~~

using an antenna sending or receiving signals in the 698-806 MHz spectrum—including the LTE band 12 that Fractus relies upon in litigation—for communication with any "*4G communication standard*" because on December 21, 2006 those frequencies were not usable for mobile device communications. In short, the applicants did not possess, and the priority documents cannot "describe," claimed subject matter—antennas sending and receiving signals using LTE protocols on LTE frequency bands, neither of which existed at the time.

313. Thus, it is my opinion that the '429 application fails to show that the applicants possessed the full scope of "*frequency band[]… associated with a 4G communication standard*" encompassing an LTE frequency band, or the full scope of "*antenna… configured to transmit and receive signals from a 4G communication standard*" that includes LTE (and LTE bands 12, 13, and 14).

314. The '677 patent claims an antenna with specific "complexity factors" related to the antenna's operating frequencies, but the '429 application never teaches a POSA how to make or identify such an antenna for LTE because LTE did not exist.

315. The '677 patent claims an antenna with specific "complexity factors" related to the antenna's operating frequencies, but the '429 application never teaches a POSA how to make or identify such an antenna for LTE because LTE did not exist. Based on the '429 application's disclosure no POSA would have

~~CONFIDENTIAL - PROTECTIVE ORDER MATERIAL~~

known how to design an LTE antenna, because in December 2006 nobody knew what frequency ranges such an antenna needed to support, or the antenna dimensions needed to support resonances for those unknown frequencies. EX1001, 25:9-12 (antenna has to support "radiation modes" for "frequency bands").

316. The '429 application's suggestion that 4G would include bands within a 2-11 GHz frequency range (Baliarda-543, [0212]) provides no description of the 698-806 MHz frequency range that would later include LTE bands 12 to 14 (and which Fractus relies upon in litigation).

317. Indeed, the '429 application states that "the integration of an antenna system into the MFWD 100 is further complicated by the presence in the MFWD 100 of additional antennas… for reception of… TV[.]" Baliarda-543, [0096]. This expressly excluded an antenna receiving signals at 698-806 MHz from the claimed "antenna system" because on December 21, 2006 the 698-806 MHz frequency range was allocated to television and could not be used for cellular communication. From the '429 application's description, it is my opinion that no POSA would have envisioned or recognized the 698-806 MHz frequency range as part of a 4G genus because in December 2006 that frequency range was allocated to television networks and could not be used for cellular communication.

~~CONFIDENTIAL - PROTECTIVE ORDER MATERIAL~~

B. Analysis

318. I was instructed by Petitioners' counsel to assume that Baliarda-543 is prior art to claims 1-5 and 12-20.

319. I was asked to form an opinion whether a POSA would have concluded that the published parent case Baliarda-543, which has the same specification as the '677 patent, anticipates or renders obvious Challenged Claims 1-5 and 12-20.

320. In forming these opinions, I was asked to consider the perspective of a POSA on **April 7, 2014**. I understand that this is the date on which the applicants filed a continuation of the '429 application, which is the next continuation application in the '677 patent's priority chain, as summarized in EX1001, code (63).

321. In my opinion, a POSA would have concluded that Baliarda-543 anticipates and/or renders obvious each of Challenged Claims 1-5 and 12-20.

322. In the below chart, I identify where Baliarda-543 discloses the subject matter in each limitation in claims 1-5 and 12-20.

'677 claim limitation	Corresponding Disclosure in Baliarda-543
1.PRE	Abstract, [0002], [0037], claim 16
1.a	Abstract, [0082]-[0084], [0097], [0152], [0212]-[0215], claim 16
1.b	[0082]-[0084], [0213]-[0217]

~~CONFIDENTIAL - PROTECTIVE ORDER MATERIAL~~

’677 claim limitation	Corresponding Disclosure in Baliarda-543
1.c	[0032]-[0035], [0098]-[0100], [0103], [0117]-[0118], [0212]-[0215], [0265], [0300], [0324]-[0325], Figs. 12A,19A
1.d	See [1.c]; [0040], [0092], [0098]-[0100], [0212]-[0215], [0241]
1.e	[0137], [0141]-[0144], [0213]-[0215], Fig. 12B
1.f	[0181]-[0183], [0213]
1.g	[0212]-[0215]
1.h	[0198], [0215]
2	[0141]-[0149], [0270], Fig. 12A
3	*See* claim 2
4	[0103], [0212]-[0215]
5.a	*See* [1.e]
5.b	*See* [1.f]
12.PRE	*See* [1.PRE]
12.a	*See* [1.a]
12.b	*See* [1.b]
12.c	*See* [1.c]
12.d	*See* [1.d]
12.e	*See* [1.e]
12.f	*See* [1.f]
12.g	*See* [1.d]
12.h	*See* [1.d]

~~CONFIDENTIAL - PROTECTIVE ORDER MATERIAL~~

’677 claim limitation	Corresponding Disclosure in Baliarda-543
12.i	[0114]-[0116], [0226], Fig. 1B
12.j	[0133]-[0134], [0227]
12.k	[0154]-[0162], [0213]
13	*See* claim 2
14	*See* claim 2
15	[0213]
16.a	*See* [1.e]
16.b	*See* [1.f]
17	*See* claim 2
18	[0103], [0212]-[0215]
19.a	*See* [5.a]
19.b	*See* [5.b]
20	[0213]-[0215]

323. For Limitation [12.k], Baliarda-543 at [0154]-[0162] says that the G_2 grid and the G_2 cell aspect ratio are determined based on the aspect ratio of the antenna rectangle. This describes a 9 column by $(2n + 1)$ row G_2 grid of cells—e.g., having an odd number of rows $(2n + 1)$—where n is an integer between 0 and 5 (for 1 to 11 rows)—wherein the aspect ratio of the cells is as close to 1 as possible. Baliarda-543 therefore describes an antenna rectangle wherein the G_2 grid has 9 columns by 1 row or 3 rows, with each cell as square as possible, which

~~CONFIDENTIAL - PROTECTIVE ORDER MATERIAL~~

means that Baliarda-543 separately describes an antenna rectangle with an aspect ratio on the order of 9 or 3, e.g., more than 2 as recited in [12.k].

~~CONFIDENTIAL - PROTECTIVE ORDER MATERIAL~~

XII. CONCLUSION

324. I declare that all statements made herein of my own knowledge are true, that all statements made on information and belief are believed to be true, and that these statements were made with the knowledge that willful false statements and the like are punishable by fine or imprisonment, or both, under Section 1001 of Title 18 of the United States Code.

325. I declare under penalty of perjury that the foregoing is true and correct.

Dated: June 5, 2025 By: _____
Daniel van der Weide, Ph.D.

~~CONFIDENTIAL - PROTECTIVE ORDER MATERIAL~~

APPENDIX A: MATERIALS CONSIDERED

Exhibit	Description
1001	U.S. Patent No. 11,031,677
1002	Prosecution History of U.S. Patent No. 11,031,677
1003	U.S. Patent No. 11,349,200
1004	Prosecution History of U.S. Patent No. 11,349,200
1005	U.S. Patent No. 12,095,149
1006	Prosecution History of U.S. Patent No. 12,095,149
1007	*intentionally left blank*
1008	Curriculum Vitae of Daniel van der Weide, Ph.D.
1009	P. Ciais, R. Staraj, G. Kossiavas, and C. Luxey. "Design of an Internal Quad-Band Antenna for Mobile Phones," *IEEE Microwave and Wireless Components Letters*, vol. 14, no. 4, pp. 148-150, April 2004 ("Ciais-Quadband").
1010	P. Ciais, R. Staraj, G. Kossiavas, and C. Luxey. "Compact Internal Multiband Antenna for Mobile Phone and WLAN Standards," *Electronics Letters*, vol. 40, no. 15, pp. 920-921, July 2004 ("Ciais-Multiband")
1011	X. Jing, Z. Du, and K. Gong. "Compact Planar Monopole Antenna for Multi-band Mobile Phones," in *2005 Asia-Pacific Microwave Conference Proceedings*, vol. 4, pp. 2657-2660, IEEE, 2005 ("Jing").
1012	H. Nakano, Y. Sato, H. Mimaki and J. Yamauchi. "An Inverted FL Antenna for Dual-Frequency Operation," *IEEE Transactions on Antennas and Propagation*, vol. 53, no. 8, pp. 2417-2421, Aug. 2005 ("Nakano")
1013	U.S. Patent App. Pub. No. 2007/0200773 ("Dou")
1014	Declaration of James L. Mullins, Ph.D.

Exhibit	Description
1015	Curriculum Vitae of James L. Mullins, Ph.D.
1016	Plaintiff's Disclosure of Asserted Claims and Infringement Contentions Against Geotab Pursuant to Local Patent Rules 3-1 and 3-2, *Fractus, S.A., v. Geotab Inc.*, No. 2:24-cv-01008 (E.D. Tex.), served March 12, 2025
1017	D.I. 75, Fractus's Opening Claim Construction Brief, *Fractus, S.A. v. ADT LLC*, No. 2:22-cv-00412 (E.D. Tex. Nov. 16, 2023)
1018	D.I. 75-1, Exhibit 1 to D.I. 75, Fractus's Opening Claim Construction Brief, *Fractus, S.A. v. ADT LLC*, No. 2:22-cv-00412 (E.D. Tex. Nov. 16, 2023)
1019	D.I. 92, Joint Claim Construction Chart, *Fractus, S.A. v. ADT LLC*, No. 2:22-cv-00412 (E.D. Tex. Jan. 4, 2024)
1020	D.I. 115, Claim Construction Order, *Fractus, S.A. v. ADT LLC*, No. 2:22-cv-00412 (E.D. Tex. Feb. 25, 2024) (Payne, M.J.)
1021	D.I. 127, Order, *Fractus, S.A. v. ADT LLC*, No. 2:22-cv-00412 (E.D. Tex. Mar. 15, 2024) (Gilstrap, D.J.)
1022	D.I. 82, Defendants ADT LLC and Vivint, Inc.'s Responsive Claim Construction Brief, *Fractus, S.A. v. ADT LLC*, No. 2:22-cv-00412 (E.D. Tex. Dec. 14, 2023)
1023	D.I. 253, Order, Fractus, S.A. v. ADT LLC, No. 2:22-cv-00412 (E.D. Tex. Oct. 4, 2024) (Gilstrap, D.J.)
1024	D.I. 1, Complaint, *Fractus, S.A., v. Geotab Inc.*, No. 2:24-cv-01008 (E.D. Tex. Dec. 6, 2024)
1025	3GPP TS 36.101 v8.4.0 (2008-12) Technical Specification: 3rd Generation Partnership Project; Technical Specification Group Radio Access Network; Evolved Universal Terrestrial Radio Access (E-UTRA); User Equipment (UE) radio transmission and reception (Release 8), 2008

Exhibit	Description
1026	Ericsson white paper, "LTE—an introduction," no. 284 23-3124 Uen Rev B (June 2009)
1027	Declaration of Gordon MacPherson
1028	'677 patent Claim Limitation Comparison Chart
1029	U.S. Patent Publication No. 2006/0214857 ("Ollikainen")
1030	ETSI TS 145 005 V4.3.0 (2001-14) Technical Specification: Digital cellular telecommunications system (Phase 2+); Radio transmission and reception (3GPP TS 45.005 version 4.3.0 Release 4)
1031	ZigBee Specification (Jun. 27, 2005)
1032	ETSI TS 125 308 V6.2.0 (2004-09) Technical Specification: Universal Mobile Telecommunications System (UMTS); UTRA High Speed Downlink Packet Access (HSDPA); Overall description; Stage 2 (3GPP TS 25.308 version 6.2.0 Release 6)
1033	ETSI TS 125 101 V6.5.0 (2004-09) Technical Specification: Universal Mobile Telecommunications System (UMTS); User Equipment (UE) radio transmission and reception (FDD) (3GPP TS 25.101 version 6.5.0 Release 6)
1034	ETSI TS 125 102 V6.0.0 (2003-12) Technical Specification: Universal Mobile Telecommunications System (UMTS); User Equipment (UE) radio transmission and reception (TDD) (3GPP TS 25.102 version 6.0.0 Release 6)
1035	ETSI TS 121 101 V6.0.0 (2004-12) Technical Specification: Universal Mobile Telecommunications System (UMTS); Technical Specifications and Technical Reports for a UTRAN-based 3GPP system (3GPP TS 21.101 version 6.0.0 Release 6)
1036	3GPP TR 23.882 V1.2.3 (2006-06) Technical Report: 3rd Generation Partnership Project; Technical Specification Group Services and System Aspects; 3GPP System Architecture Evolution: Report on Technical Options and Conclusions (Release 7)

Exhibit	Description
1037	3GPP TR 23.882 V1.6.1 (2006-11) Technical Report: 3rd Generation Partnership Project; Technical Specification Group Services and System Aspects; 3GPP System Architecture Evolution: Report on Technical Options and Conclusions (Release 7)
1038	3GPP TR 23.882 V1.8.0 (2007-02) Technical Report: 3rd Generation Partnership Project; Technical Specification Group Services and System Aspects; 3GPP System Architecture Evolution: Report on Technical Options and Conclusions (Release 7)
1039	pages from E. Dahlman et al., *3G Evolution: HSPA and LTE for Mobile Broadband* (Academic Press 2d ed. 2008)
1040	U.S. Patent Publication No. 2008/0018543 (Baliarda-543)
1041	U.S. Department of State, *United States Delegation Report: World Radiotelecomunications Conference 2007* (2007), available at https://2001-2009.state.gov/documents/organization/108955.pdf (visited May 19, 2025)
1042	IEEE Std. 802.11a-1999, Supplement to the IEEE Standard for Information Technology—Telecommunications and information exchange between systems—Local and metropolitan area networks—Specific requirements— Part 11: Wireless LAN Medium Access Control (MAC) and Physical Layer (PHY) specifications: High-speed Physical Layer in the 5 GHz Band (Dec. 30, 1999)
1043	IEEE Std. 802.11b-1999, Supplement to the IEEE Standard for Information Technology—Telecommunications and information exchange between systems—Local and metropolitan area networks—Specific requirements— Part 11: Wireless LAN Medium Access Control (MAC) and Physical Layer (PHY) specifications: Higher-Speed Physical Layer Extension in the 2.4 GHz Band (Jan. 20, 2000)
1044	Specification of the Bluetooth System version 2.0, volume 2 (issued Nov. 4, 2004)
1045	Second Report and Order, *In re Service Rules for the 698-746, 747-762 and 777-792 MHz Bands (WT Docket No. 06-150); Revision of the*

Exhibit	Description
	Commission's Rules to Ensure Compatibility with Enhanced 911 Emergency Calling Systems (CC Docket No. 94-102); Section 68.4(a) of the Commission's Rules Governing Hearing Aid-Compatible Telephones (WT Docket No. 01-309); Biennial Regulatory Review–Amendment of Parts 1, 22, 24, 27, and 90 to Streamline and Harmonize Various Rules Affecting Wireless Radio Services (WT Docket No. 03-264); Former Nextel Communications, Inc. Upper 700 MHz Guard Band Licenses and Revisions to Part 27 of the Commission's Rules (WT Docket No. 06-169); Implementing a Nationwide, Broadband, Interoperable Public Safety Network in the 700 MHz Band (PS Docket No. 06-229); Development of Operational, Technical and Spectrum Requirements for Meeting Federal, State and Local Public Safety Communications Requirements Through the Year 2010 (WT Docket No. 96-86); Declaratory Ruling on Reporting Requirement under Commission's Part 1 Anti-Collusion Rule (WT Docket No. 07-166), FCC 07-132 (Jul. 31, 2007), available at https://docs.fcc.gov/public/attachments/FCC-07-132A1.pdf (visited May 21, 2025)
1046	ITU, Report ITU-R M.2134-0: Requirements related to technical performance for IMT-Advanced radio interface(s) (2008), available at https://www.itu.int/pub/R-REP-M.2134-2008/en (visited May 22, 2025)
1047	Chart 45 to EX1016 [confidential]
1048	Chart 44 to EX1016 [confidential]

APPENDIX B: U.S. PATENT NO. 11,031,677 CLAIM LIST

REF	Limitation
1.PRE	A wireless device comprising:
1.a	an antenna system comprising:
1.b	a ground plane;
1.c	a first antenna within the wireless device and configured to support at least three frequency bands contained within first and second frequency ranges of the electromagnetic spectrum,
1.d	the second frequency range being higher in frequency than the first frequency range and at least one of the three frequency bands being associated with a 4G communication standard,
1.e	the first antenna being proximate to a first short side of a ground plane rectangle enclosing the ground plane and defining a first antenna contour comprising an entire perimeter of the first antenna,
1.f	wherein the first antenna contour has a level of complexity defined by complexity factor F_{21} having a value of at least 1.20 and complexity factor F_{32} having a value less than 1.75; and
1.g	a second antenna within the wireless device and configured to support at least one frequency band different from the at least three frequency bands supported by the first antenna,
1.h	the second antenna being arranged completely within the ground plane rectangle.
2	The wireless device of claim 1, wherein the first antenna contour comprises at least 20 segments.
3	The wireless device of claim 2, wherein the perimeter of the first antenna contour comprises at least 35 segments.

REF	Limitation
4	The wireless device of claim 1, wherein the antenna system comprises a third antenna configured to receive signals employing a 4G communication standard.
5.a	The wireless device of claim 4, wherein the third antenna defines an antenna contour comprising an entire perimeter of the third antenna, and
5.b	wherein the antenna contour of the third antenna has a level of complexity defined by complexity factor F_{21} having a value of at least 1.2 and a complexity factor F_{32} having a value of at least 1.35.
6.PRE	A wireless device comprising:
6.a	an antenna system comprising:
6.b	a ground plane;
6.c	a first antenna within the wireless device and configured to support at least two frequency bands contained within first and second frequency ranges of the electromagnetic spectrum,
6.d	the second frequency range being higher in frequency than the first frequency range,
6.e	the first antenna being proximate to a first short side of a ground plane rectangle enclosing the ground plane and defining a first antenna contour comprising an entire perimeter of the first antenna,
6.f	wherein the first antenna contour has a level of complexity defined by complexity factor F_{21} having a value of at least 1.20 and complexity factor F_{32} having a value less than 1.75; and
6.g	a second antenna within the wireless device and defining a second antenna contour comprising an entire perimeter of the second antenna,

REF	Limitation
6.h	the second antenna being proximate to a second short side of the ground plane rectangle that is opposite to the first short side of the ground plane rectangle,
6.i	a minimum-sized parallelepiped of rectangular faces that completely encloses a volume of the second antenna defining an antenna box, and
6.j	an orthogonal projection of the antenna box along a normal to a face with a largest area of the second antenna defining an antenna rectangle,
6.k	wherein a length of the second antenna contour is greater than four times a diagonal of the antenna rectangle.
7	The wireless device of claim 6, wherein the first antenna contour comprises at least 20 segments.
8	The wireless device of claim 7, wherein the first antenna contour comprises at least 35 segments.
9	The wireless device of claim 6, wherein the second antenna contour has a level of complexity defined by complexity factor F_{21} having a value of at least 1.2 and a complexity factor F_{32} having a value of at least 1.35.
10	The wireless device of claim 6, wherein the antenna system comprises a third antenna configured to provide wireless connectivity in at least two frequency bands.
11.a	The wireless device of claim 10, wherein the third antenna defines a third antenna contour comprising an entire perimeter of the third antenna, and
11.b	wherein the third antenna contour has a level of complexity defined by complexity factor F_{21} having a value of at least 1.20 and complexity factor F_{32} having a value of at least 1.35.
12.PRE	A wireless device comprising:

REF	Limitation
12.a	an antenna system comprising:
12.b	a ground plane;
12.c	a first antenna within the wireless device and configured to provide operation in at least four frequency bands, at least one of the at least four frequency bands is contained within a first frequency range and at least one other of the four frequency bands is contained within a second frequency range,
12.d	the first frequency range being lower in frequency than the second frequency range,
12.e	the first antenna being proximate to a first short side of a ground plane rectangle enclosing the ground plane, the first antenna defining a first antenna contour comprising an entire perimeter of the first antenna, and
12.f	wherein the first antenna contour has a level of complexity defined by complexity factor F_{21} having a value of at least 1.20 and complexity factor F_{32} having a value less than 1.75, and
12.g	wherein the first antenna is configured to transmit and receive signals from a 4G communication standard; and
12.h	a second antenna within the wireless device and configured to receive signals from a 4G communication standard,
12.i	a minimum-sized parallelepiped of rectangular faces that completely encloses a volume of the second antenna defining an antenna box,
12.j	an orthogonal projection of the antenna box along a normal to a face with a largest area of the second antenna defining an antenna rectangle,
12.k	an aspect ratio of the antenna rectangle being defined as a ratio between a width and a height of the antenna rectangle, and wherein the aspect ratio has a value of at least 2.

REF	Limitation
13	The wireless device of claim 12, wherein the first antenna contour comprises at least 20 segments.
14	The wireless device of claim 13, wherein the first antenna contour comprises at least 35 segments.
15	The wireless device of claim 12, wherein the second antenna is proximate to a second short side of the ground plane rectangle that is opposite to the first short side of the ground plane rectangle.
16.a	The wireless device of claim 12, wherein the second antenna defines a second antenna contour comprising an entire perimeter of the second antenna, and
16.b	wherein the second antenna contour has a level of complexity defined by complexity factor F_{21} having a value of at least 1.20 and complexity factor F_{32} having a value of at least 1.35.
17	The wireless device of claim 16, wherein the second antenna contour comprises at least 20 segments.
18	The wireless device of claim 12, wherein the antenna system comprises a third antenna configured to provide wireless connectivity in at least two frequency bands.
19.a	The wireless device of claim 18, wherein the third antenna defines a third antenna contour comprising an entire perimeter of the third antenna, and
19.b	wherein the third antenna contour has a level of complexity defined by complexity factor F_{21} having a value of at least 1.20 and complexity factor F_{32} having a value of at least 1.35.
20	The wireless device of claim 18, wherein the third antenna is proximate to a third side of the antenna rectangle being orthogonal to the first short side.