Amy K. Wigmore, *pro hac vice*
amy.wigmore@wilmerhale.com
Joshua L. Stern, *pro hac vice*
joshua.stern@wilmerhale.com
WILMER CUTLER PICKERING
HALE & DORR LLP
2100 Pennsylvania Avenue NW
Washington, DC 20037
Tel.: (202) 663-6000

Madeleine C. Laupheimer, *pro hac vice*
madeleine.laupheimer@wilmerhale.com
WILMER CUTLER PICKERING
HALE & DORR LLP
60 State Street
Boston, MA 02109
Tel.: (617) 526-6000

James M. Dowd, SBN 259578
james.dowd@wilmerhale.com
Vikram P. Iyer, SBN 318324
vikram.iyer@wilmerhale.com
WILMER CUTLER PICKERING
HALE & DORR LLP
350 South Grand Avenue, Suite 2400
Los Angeles, CA 90071
Tel.: (213) 443-5300

Attorneys for Defendants
Revelyst Sales LLC

UNITED STATES DISTRICT COURT
CENTRAL DISTRICT OF CALIFORNIA

BRAINGUARD TECHNOLOGIES, INC., Plaintiff, v. REVELYST SALES LLC, Defendant.	CASE NO. 8:24-cv-2652-JWH-ADS **DEFENDANT REVELYST SALES LLC'S INVALIDITY CONTENTIONS**

TABLE OF CONTENTS

Page

I. INTRODUCTION 1

II. OBJECTIONS AND RESERVATION OF RIGHTS 1

III. PRIORITY DATE FOR THE ASSERTED PATENTS 4

A. The Priority Date of the ’319 Patent 6

1. Overview of Applications in the ’319 Patent’s Priority Chain 6
2. The Earliest Priority Date the Asserted Claims of the ’319 Patent Can Claim Is July 20, 2012 6

B. The Priority Date of the ’561 Patent 8

1. Overview of Applications in the ’561 Patent’s Priority Chain 8
2. The Earliest Priority Date that Claims 9-10 and 16-20 of the ’561 Patent Can Claim Is July 20, 2012 8

C. The Priority Date of the ’536 Patent 10

1. Overview of Applications in the ’536 Patent’s Priority Chain 10
2. The Earliest Priority Date that Claims 9-10, 16-17, and 19-20 of the ’536 Patent Can Claim Is July 20, 2012 10

D. The Priority Date of the ’635 Patent 12

1. Overview of Applications in the ’635 Patent’s Priority Chain 12
2. The Earliest Priority Date the Asserted Claims of the ’635 Patent Can Claim Is July 24, 2015 12

E. The Priority Date of the ’909 Patent 15

1. Overview of Applications in the ’909 Patent’s Priority Chain 15
2. The Earliest Priority Date Asserted Claims 1-2, 9, 11-13 and 20 of the ’909 Patent Can Claim Is July 24, 2015, and the Earliest Priority Date Asserted Claims 5, 8, 16, and 19 is February 22, 2016 16

IV. GENERAL REASONS TO MODIFY, EXTEND, OR COMBINE PRIOR ART TEACHINGS, DISCLOSURES, AND REFERENCES 20

A. Person of Ordinary Skill In the Art 20
B. A POSITA Would Have Had Many Reasons to Modify, Extend, or Combine Prior Art Teachings, Disclosures, and References 20

V. THE CLAIMED CONCEPTS IN THE PATENTS-IN-SUIT WERE KNOWN 23

A. The Risks of Rotational Acceleration of the Brain from Impact Were Already Known and Considered for Helmet Design 23

B. Multiple Helmets Had Already Been Developed and Described to Allow Relative Sliding and Reduce Rotational Acceleration of the Brain Including Connection of Layers by Sliding Layers 26

C. Comfort Layers Conforming to the Human Head and/or Made of Foam and Devices that Allow Adjustment to Fit the Head Were Already Known and Considered for Helmet Design Including Specifically Helmets that Allow Relative Sliding and Reduce Rotational Acceleration of the Brain.....32

D. Chin straps Connected to an Inner Layer Were Already Known in Helmet Design Including in Helmets that Allow Relative Sliding and Reduce Rotational Acceleration of the Brain 33

VI. INVALIDITY CONTENTIONS FOR THE ASSERTED PATENTS..... 35

A. Identification of Invalidating Prior Art 35

1. Patent References..... 36
2. Items Offered for Sale, Sold or Publicly Known and Used..... 37
3. Other References..... 38
4. Dynamic Drinkware..... 38

a) Weber 39

b) Halldin-II.....53

B. Disclosure of Invalidity Due to Anticipation.....64

C. Disclosure of Invalidity Due to Obviousness 67

1. The Prior Art Listed in Sections VI.C.2, VI.C.3, VI.C.4, VI.C.5, and VI.C.6 is Analogous Art..... 69
2. The ’319 patent 69

a) Obviousness Combinations.....70

b) Reasons to Modify, Extend, or Combine Claimed Concepts 72

i) A lining layer that conforms to the human head and is made of foam would have been an obvious feature of helmets allowing relative sliding and reducing rotational acceleration of the brain.....73

ii) Incorporating mechanical connections into sliding layers would have been an obvious feature of helmets allowing relative sliding and reducing rotational acceleration of the brain 80

iii) Using different types of materials for helmet layers to create shell layers would have been an obvious feature of helmets to reduce forces on the head and brain and provide safety. 91

3. The ’561 patent 92

a) Obviousness Combinations....93

b) Reasons to Modify, Extend, or Combine Claimed Concepts 97

i) A lining layer that conforms to the human head and/or is made of foam would have been an obvious feature of helmets allowing relative sliding and reducing rotational acceleration of the brain....97

ii) Incorporating mechanical connections into sliding layers would have been an obvious feature of helmets allowing relative sliding and reducing rotational acceleration of the brain 106

iii) Using different types of materials for helmet layers to create shell layers would have been an obvious feature of helmets to reduce forces on the head and brain and provide safety 117

4. The ’536 patent 118

a) Obviousness Combinations....119

b) Reasons to Modify, Extend, or Combine Claimed Concepts 121

i) A lining layer that conforms to the human head and/or is made of foam would have been an obvious feature of helmets allowing relative sliding and reducing rotational acceleration of the brain....122

ii) Incorporating mechanical connections into sliding layers would have been an obvious feature of helmets allowing relative sliding and reducing rotational acceleration of the brain 131

5. The ’635 patent 141

a) Obviousness Combinations....141

b) Reasons to Modify, Extend, or Combine Claimed Concepts 147

i) A chin strap attached to an inner layer to secure an inner layer (inner shell layer/inner conforming layer) of a helmet while an outer layer (outer shell layer) is allowed to slide would have been an obvious feature of helmets allowing relative sliding....147

ii) Incorporating mechanical connections into sliding layers would have been an obvious feature of helmets allowing relative sliding and reducing rotational acceleration of the brain 153

iii) A lining layer that conforms to the human head would have been an obvious feature of helmets allowing relative sliding and reducing rotational acceleration of the brain.....164

iv) Using different types of materials for helmet layers to create shell layers would have been an obvious feature of helmets to reduce forces on the head and brain and provide safety 173

v) Incorporating a shear mechanism into the helmets disclosed in US 2013/0019384 ("Knight") would have been obvious. 175

6. The '909 patent 176

a) Obviousness Combinations.....177

b) Reasons to Modify, Extend, or Combine Claimed Concepts 186

i) A chin strap attached to an inner layer to secure an inner layer (inner protective shell/inner protective layer) of a helmet while an outer layer (outer protective shell/outer protective layer) is allowed to slide would have been an obvious feature of helmets allowing relative sliding 186

ii) Incorporating mechanical connections into sliding layers would have been an obvious feature of helmets allowing relative sliding and reducing rotational acceleration of the brain 193

iii) A liner layer that conforms to and secures the human head would have been an obvious feature of helmets allowing relative sliding and reducing rotational acceleration of the brain 203

iv) It would have been obvious to incorporate elastic bands or other elastomeric elements as a mechanical connection element between sliding layers. 213

v) Using different types of materials for helmet layers to create shell layers would have been an obvious feature of helmets to reduce forces on the head and brain and provide safety 215

vi) Incorporating a shear mechanism into the helmets disclosed in US 2013/0019384 ("Knight") would have been obvious. 216

D. Invalidity Under 35 U.S.C. § 112 218
1. Lack of Written Description 219
a) The ’319 patent 219
b) The ’561 patent 220
c) The ’536 patent 221
d) The ’635 patent 222
e) The ’909 patent 223
2. Lack of Enablement 224
a) The ’319 patent 225
b) The ’561 patent 226
c) The ’536 patent 227
d) The ’635 patent 228
e) The ’909 patent 229
3. Indefiniteness 231
a) The ’319 patent 231
b) The ’561 patent 233
c) The ’536 patent 235
d) The ’635 patent 236
e) The ’909 patent 237
VII. Inequitable Conduct 239

I. INTRODUCTION

Pursuant to the parties' agreed schedule, Defendant Revelyst Sales LLC ("Revelyst") hereby serves its Invalidity Contentions on Plaintiff BrainGuard Technologies, Inc. ("BrainGuard") relating to U.S. Patent Nos. 8,863,319 (the "'319 patent"), 9,060,561 (the "'561 patent"), 9,271,536 (the "'536 patent"), 9,414,635 (the "'635 patent"), and 9,516,909 (the "'909 patent") (the "Patents-in-Suit" or the "Asserted Patents").

On April 25, 2025, Plaintiff served Revelyst with its Disclosure of Asserted Claims and Infringement Contentions ("Infringement Contentions") alleging infringement of the '319 patent, the '561 patent, the '536 patent, the '635 patent, and the '909 patent. Specifically, Plaintiff alleged that Revelyst infringes the following claims:

Patent	Claims Asserted by Plaintiff
'319 patent	6-11, 17-20
'561 patent	1, 7-10, 16-20
'536 patent	1, 7-10, 16-20
'635 patent	1-4, 8-12, 17-20
'909 patent	1, 2, 5, 8, 9, 11-13, 16, 19, 20

These Invalidity Contentions address the above-asserted claims.

II. OBJECTIONS AND RESERVATION OF RIGHTS

Plaintiff's Infringement Contentions are deficient in multiple respects and do not provide Revelyst with sufficient information to understand the specific accused features and/or components and the alleged factual and/or evidentiary bases for Plaintiff's infringement allegations. Among other things, the Infringement Contentions lack specificity, fail to properly identify accused instrumentalities, are internally inconsistent, and fail to adequately explain Plaintiff's infringement theories for numerous limitations. Plaintiff has prejudiced Revelyst's

ability to understand, for purposes of preparing these Invalidity Contentions, what Plaintiff alleges to be the scope of the asserted claims. If Plaintiff modifies any assertion or contention in its Infringement Contentions or presents any new assertion or contention relevant to these Invalidity Contentions, Revelyst reserves the right to supplement or otherwise amend these Invalidity Contentions.

Revelyst has prepared these Invalidity Contentions based on information and discovery currently available to it. The Court has yet to construe any claim term(s) of the Patents-In-Suit. Fact discovery and expert discovery have not concluded in this case. Revelyst's investigation into the invalidity of the Patent-in-Suit, including further discovery regarding non-party product prior art is ongoing. Accordingly, Revelyst reserves the right to amend these Invalidity Contentions as discovery progresses and the claims are construed.

These contentions should not be taken as an indication of Revelyst's positions with regard to the proper construction of any term. Rather, Revelyst has made reasonable assumptions, to the extent necessary and appropriate, as to the meaning of the claim terms and relies in part on Plaintiff's apparent interpretation of the claims, and for the purposes of these contentions only, applies those meanings in these contentions. Revelyst reserves the right to amend these contentions as a result of the *Markman* hearing, or any other subsequent clarification or alteration of the meaning of the claim terms, or interpretation made by Plaintiff.

Revelyst also expressly reserves the right to assert and rely upon any invalidity defense(s), including anticipation, obviousness, written description, enablement, and/or indefiniteness asserted by any other defendant that may be added to this litigation, or by a defendant in another action involving one or more of the Patents-in-Suit, including but not limited to, any prior art identified by such defendant. Revelyst further reserves the right to assert that the asserted claims are invalid under 35 U.S.C. § 102(f) in the event that Revelyst obtains evidence that the named inventor of the Asserted Patent did not invent (either alone or in conjunction with others) the subject matter recited in the asserted claims. Revelyst further reserves the right to assert that the

asserted claims are invalid under any section of pre-AIA 35 U.S.C. §§ 102, 103, and 112 and AIA 35 U.S.C. §§ 102, 103, and 112.

These contentions are provided without prejudice to Revelyst's right to introduce at trial, *inter alia*, any subsequently discovered evidence, or evidence or expert opinions relating to currently known facts and to produce and introduce at trial all evidence, whenever discovered. Furthermore, nothing in these contentions shall limit any of Revelyst's experts from relying upon any information in this case, in support of any defense, or from providing opinions and testimony in support of any defense. Moreover, facts, documents, and things now known may be imperfectly understood and, accordingly, such facts, documents, and things may not have been included in this statement. Revelyst reserves the right to refer to, conduct discovery with reference to, or offer in evidence at the time of trial, any and all facts, expert opinion testimony, documents, and things notwithstanding this statement of Revelyst's contentions. Revelyst further reserves the right to refer to, conduct discovery with reference to, or offer in evidence at the time of trial, any and all facts, documents, and things that are not currently recalled but might be recalled at some time in the future.

To the extent these contentions contain any information that may be protected from discovery under the attorney-client privilege, the attorney work-product immunity, or any other applicable privilege or immunity, such disclosure is inadvertent and does not constitute a waiver of any such privilege or immunity.

Revelyst's ongoing efforts include but are not limited to: serving third-party subpoenas regarding or otherwise obtaining from third parties prior art, seeking additional information related to the references and systems disclosed in these Invalidity Contentions, and seeking additional information related to available prior art systems, as well as Plaintiff's Infringement Contentions and the products accused of infringing therein. No depositions have been taken as of this time, including, without limitation, depositions of the named inventors, authors, or entities listed on any references or systems identified in these Invalidity Contentions. Further, Revelyst reserves the

right to review and to supplement these Invalidity Contentions with respect to any additional prior art that becomes apparent as discovery proceeds.

III. PRIORITY DATE FOR THE ASSERTED PATENTS

Plaintiff has asserted that all of the Patents-In-Suit are entitled to a priority date of at least July 21, 2011. BrainGuard Infringement Contentions at 7-8. The applications for the Patents-In-Suit all purport to claim priority through a chain of continuation applications to a July 21, 2011 provisional application, Provisional Application No. 61/510,401 ("the '401 Provisional"). *See* BRAIN-REV-00000690- BRAIN-REV-00000719.

However, as discussed further below, the BrainGuard Patents are not entitled to a July 21, 2011 priority date. Instead:

- The earliest priority date that BrainGuard can claim for the asserted claims of the '319 patent is July 20, 2012, the filing date of the '319 patent.[1]
- The earliest priority date that BrainGuard can claim for claims 9-10 and 16-20 of the '561 patent is July 20, 2012.[2]
- The earliest priority date that BrainGuard can claim for claims 9-10, 16-17, and 19-20 of the '536 patent is July 20, 2012.[3]

---

[1] Additionally, the asserted claims of the '319 patent, including to the extent they are interpreted to read on Revelyst's Accused Products, are invalid under 35 U.S.C. § 112 for lack of written description and enablement and indefiniteness. *See* Sections VI.D.1.a, D.2.a, D.3.a.

[2] Additionally, the asserted claims of the '561 patent, including to the extent they are interpreted to read on Revelyst's Accused Products, are invalid under 35 U.S.C. § 112 for lack of written description and enablement and indefiniteness. *See* Sections VI.D.1.b, D.2.b, D.3.b.

[3] Additionally, the asserted claims of the '536 patent, including to the extent they are interpreted to read on Revelyst's Accused Products, are invalid under 35 U.S.C. § 112 for lack of written description and enablement and indefiniteness. *See* Sections VI.D.1.c, D.2.c, D.3.c.

- The earliest priority date that BrainGuard can claim for the asserted claims of the '635 patent is July 24, 2015.[4]
- The earliest priority date that BrainGuard can claim for claims 1-2, 9, 11-13 and 20 of the '909 Patent Can Claim Is July 24, 2015, and the Earliest Priority Date Asserted Claims 5, 8, 16, and 19 is February 22, 2016.[5]

To rely on the '401 Provisional for priority, Patent Owner must prove that each application in the chain leading back to the priority application provides written-description support for each claim—that is, that each application must "'reasonably convey[] to those skilled in the art that the inventor had possession of the [later-claimed] subject matter as of the filing date.'" *Parus Holdings, Inc. v. Google LLC*, 70 F.4th 1365, 1373 (Fed. Cir. 2023) (quoting *Ariad Pharms., Inc. v. Eli Lilly & Co.*, 598 F.3d 1336, 1351 (Fed. Cir. 2010) (en banc)); *see Droplets, Inc. v. E*TRADE Bank*, 887 F.3d 1309, 1317 (Fed. Cir. 2018) (PO "[must] provide a clear, unbroken chain of priority."). The written-description test "requires an objective inquiry into the four corners of the specification" and "a description that merely renders the invention obvious does not satisfy the requirement." *Ariad*, 598 F.3d at 1351-52.

A means-plus-function claim in a final application is not entitled to the priority date of a provisional application if that provisional application does not disclose all corresponding structures required to support the claim. *Auto. Techs. Int'l, Inc. v. Delphi Corp.*, 776 F. Supp. 2d 469, 473 (E.D. Mich. 2011) ("[A] parent application must disclose all of the corresponding structures of a claim . . . in order for the patent that issues from that application to trace its priority date back to the parent."); *see Lucent Techs., Inc. v. Gateway, Inc.*, 543 F.3d 710, 719 (Fed. Cir. 2008) (holding

---

[4] Additionally, the asserted claims of the '635 patent, including to the extent they are interpreted to read on Revelyst's Accused Products, the claims are invalid under 35 U.S.C. § 112 for lack of written description and enablement and indefiniteness. Sections VI.D.1.d, D.2.d, D.3.d.

[5] Additionally, the asserted claims of the '909 patent, including to the extent they are interpreted to read on Revelyst's Accused Products, the claims are invalid under 35 U.S.C. § 112 for lack of written description and enablement and indefiniteness. Sections VI.D.1.d, D.2.d, D.3.d.

that a claim which "recite[d] the two means-plus-function claim terms [wa]s only entitled to" the later priority date when "the corresponding structures . . . first appeared.").

At least for the claims detailed below, Plaintiff cannot show written description support in the purported priority applications.

A. The Priority Date of the '319 Patent

1. <u>Overview of Applications in the '319 Patent's Priority Chain</u>

Application No. 13/554,471 was filed on July 20, 2012, and issued as the '319 patent on October 21, 2014. '319 Patent, Cover. The '319 patent purports to claim priority to the '401 Provisional, filed on July 21, 2011. '319 Patent at Related U.S. Application Data.

2. <u>The Earliest Priority Date the Asserted Claims of the '319 Patent Can Claim Is July 20, 2012</u>

The asserted claims of the '319 patent (claims 6-11 and 17-20) are not entitled to the claimed priority date of July 21, 2011, because the '401 Provisional does not provide written description support for several claim elements.

Each asserted claim of the '319 patent (claims 6-11 and 17-20) recites "**means to allow the outer shell layer to slide relative to the middle shell layer**." This is a means-plus-function term. The following structures and their equivalent structures are not disclosed in the '401 Provisional and instead are first referred to in the specification of the '319 patent as filed on July 20, 2012: (1) thin elastomeric truss layer in a comb structure (*e.g.*, '319 patent at 9:15-21); (2) conical structures, 3D pyramid or parabolic structures, or cylinders (*e.g.*, '319 patent at 9:24-55); (3) dampers (*e.g.*, '319 patent at 10:58-60, 10:41-48). Accordingly, the earliest possible date the asserted claims of the '319 patent are entitled priority is July 20, 2012.

Each asserted claim of the '319 patent (claims 6-11 and 17-20) recites "**means to allow the middle shell layer to slide relative to the inner shell layer**." This is a means-plus-function term. The following structures and their equivalent structures are not disclosed in the '401 Provisional and instead are first referred to in the specification of the '319 patent as filed on July

20, 2012: (1) thin elastomeric truss layer in a comb structure (*e.g.*, '319 patent at 9:15-21); (2) conical structures, 3D pyramid or parabolic structures, or cylinders (*e.g.*, '319 patent at 9:24-55); (3) dampers (*e.g.*, '319 patent at 10:58-60, 10:41-48). Accordingly, the earliest possible date the asserted claims of the '319 patent are entitled priority is July 20, 2012.

Asserted claims 9-10 and 19-20 recite "**wherein a lining layer is connected to the inner shell layer, wherein the lining layer is configured to conform to a human head**." But the '401 Provisional nowhere describes a lining layer, much less one that is connected to the inner shell layer or configured to conform to a human head. A skilled artisan would not have understood from the four corners of the specification that the inventor had possession of a lining layer connected to the inner shell layer and configured to conform to a human head. Indeed, the only places the '401 Provisional even refers to gear specifically for a "human head" (as opposed to "protective gear" generally) are (1) in the "Description of Related Art" and (2) in the description of a "Coconut and Fiber Element" embodiment that does not refer to a helmet with sliding layers. BRAIN-REV-00000707-BRAIN-REV-00000708, BRAIN-REV-00000713.

Because the '401 Provisional fails to provide written description support for any helmet with a lining layer connected to the inner shell layer and configured to conform to a human head, the '319 patent's claims are not entitled to a July 21, 2011 priority date. The earliest application referring to a lining layer was U.S. Application No. 13/554,471, filed July 20, 2012. BRAIN-REV-00000164. Although Revelyst does not concede that that language adequately supports the claimed lining layer, the earliest possible date claims 9-10 and 19-20 of the '319 Patent are entitled to priority is July 20, 2012.

Asserted claims 10 and 20 recite "**wherein the lining layer comprises foam**." For the same reasons that the '401 Provisional does not recite a lining layer, it does not recite a lining layer comprising foam. The earliest application referring to a lining layer comprising foam was U.S. Application No. 13/554,471, filed July 20, 2012. BRAIN-REV-00000164. Although Revelyst does not concede that that language adequately supports the claimed lining layer comprising foam,

the earliest possible date claims 10 and 20 of the '319 Patent are entitled to priority is July 20, 2012.

B. The Priority Date of the '561 Patent

1. Overview of Applications in the '561 Patent's Priority Chain

Application No. 14/485,993 was filed on September 15, 2014, and issued as the '561 patent on June 23, 2015. '561 patent, Cover. The '561 patent purports to claim priority to the '401 Provisional, filed on July 21, 2011, through Application No. 13/554,471, which was filed on July 20, 2012, and issued as the '319 patent. '319 Patent, Cover. '561 Patent at Related U.S. Application Data. The '561 patent was filed as a continuation of the '319 patent.

2. The Earliest Priority Date that Claims 9-10 and 16-20 of the '561 Patent Can Claim Is July 20, 2012

Asserted claims 9-10 and 16-20 of the '561 patent are not entitled to the claimed priority date of July 21, 2011, because the '401 Provisional does not provide written description support for several claim elements.

Asserted claims 18-20 of the '561 patent recite "**first absorptive/dissipative means to allow the first shell layer to slide relative to the second shell layer**." This is a means-plus-function term. The following structures and their equivalent structures are not disclosed in the '401 Provisional and instead are first referred to in the specification of the '319 patent as filed on July 20, 2012: (1) thin elastomeric truss layer in a comb structure (*e.g.*, '561 patent at 9:24-30); (2) conical structures, 3D pyramid or parabolic structures, or cylinders (*e.g.*, '561 patent at 9:33-64); (3) dampers (*e.g.*, '561 patent at 11:1-3, 10:51-58). Accordingly, the earliest possible date the asserted claims of the '561 patent are entitled priority is July 20, 2012.

Asserted claims 18-20 of the '561 patent recite "**second absorptive/dissipative means**." This is a means-plus-function term. The following structures and their equivalent structures are not disclosed in the '401 Provisional and instead are first referred to in the specification of the '319 patent as filed on July 20, 2012: (1) thin elastomeric truss layer in a comb structure (*e.g.*, '561

patent at 9:24-30); (2) conical structures, 3D pyramid or parabolic structures, or cylinders (*e.g.*, '561 patent at 9:33-64); (3) dampers (*e.g.*, '561 patent at 11:1-3, 10:51-58). Accordingly, the earliest possible date the asserted claims of the '561 patent are entitled priority is July 20, 2012.

Asserted claims 9 and 19-20 recite "**wherein a lining layer is connected to the third shell layer, wherein the lining layer is configured to conform to a human head**." Asserted claims 10, 16-17 recite "**a lining layer connected to the second shell layer, wherein the lining layer is configured to conform to a human head**." But the '401 Provisional nowhere describes a lining layer, much less one that is connected to the second or third shell layer or configured to conform to a human head. A skilled artisan would not have understood from the four corners of the specification that the inventor had possession of a lining layer connected to the second or third shell layer and configured to conform to a human head. Indeed, the only places the '401 Provisional even refers to gear specifically for a "human head" (as opposed to "protective gear" generally) are (1) in the "Description of Related Art" and (2) in the description of a "Coconut and Fiber Element" embodiment that does not refer to a helmet with sliding layers. BRAIN-REV-00000707-BRAIN-REV-00000708, BRAIN-REV-00000713.

Because the '401 Provisional fails to provide written description support for any helmet with a lining layer connected to the second or third shell layer and configured to conform to a human head, the '561 patent's claims are not entitled to a July 21, 2011 priority date. The earliest application referring to a lining layer was U.S. Application No. 13/554,471, filed July 20, 2012. BRAIN-REV-00000164. Although Revelyst does not concede that that language adequately supports the claimed lining layer, the earliest possible date claims 9-10, 16-17, and 19-20 of the '561 Patent are entitled to priority is July 20, 2012.

Asserted claim 20 recites "**wherein the lining layer comprises foam**." For the same reasons that the '401 Provisional does not recite a lining layer, it does not recite a lining layer comprising foam. The earliest application referring to a lining layer comprising foam was U.S. Application No. 13/554,471, filed July 20, 2012. BRAIN-REV-00000164. Although Revelyst

does not concede that that language adequately supports the claimed lining layer comprising foam, the earliest possible date claim 20 of the'561 Patent is entitled to priority is July 20, 2012.

C. The Priority Date of the '536 Patent

1. Overview of Applications in the '536 Patent's Priority Chain

Application No. 14/714,093 was filed on May 15, 2015, and issued as the '536 patent on March 1, 2016. '536 patent, Cover. The '536 patent purports to claim priority to the '401 Provisional, filed on July 21, 2011, through a chain of continuation applications.[6] The purported priority applications for the '536 patent are the following:

- The '401 Provisional, filed on July 21, 2011.
- Application No. 13/554,471, filed on July 20, 2012, and issued as the '319 patent.
- Application No. 14/485,993, filed on September 15, 2014, and issued as the '561 patent. The '561 patent was filed as a continuation of the '319 patent.[7]

'536 Patent at Related U.S. Application Data. The '536 patent was filed as a continuation of the '561 patent.

2. The Earliest Priority Date that Claims 9-10, 16-17, and 19-20 of the '536 Patent Can Claim Is July 20, 2012

Asserted claims 9-10, 16-17, and 19-20 of the '536 patent are not entitled to the claimed priority date of July 21, 2011, because the '401 Provisional does not provide written description support for the lining layer.

Asserted claim 9 recites "**wherein a lining layer is connected to the third layer, wherein the lining layer is configured to conform to a human head**." Asserted claims 10, 16-17 recite

---

[6] The face of the '561 patent states that its application, Application No. 14/485,993, was a ***continuation*** of Application No. 13/554,471, which issued as the '319 patent. The face of Application No. 14/714,093 states that Application No. 14/485,993, was a ***continuation-in-part*** of Application No. 13/554,471, which issued as the '319 patent. For the purposes of these contentions, Revelyst assumes (without conceding) that the application is a continuation, but Revelyst's arguments apply equally if it is a continuation-in-part.

[7] *See* n.6.

"**a lining layer connected to the second layer, wherein the lining layer is configured to conform to a portion of a human body**." Asserted claims 19-20 recite "**wherein a lining layer is connected to the third layer, wherein the lining layer is configured to conform to a portion of a human body**." But the '401 Provisional nowhere describes a lining layer, much less one that is connected to the second or third layer or configured to conform to a human head or a portion of a human body. A skilled artisan would not have understood from the four corners of the specification that the inventor had possession of a lining layer connected to the second or third layer and configured to conform to a human head or a portion of a human body. Indeed, the only places the '401 Provisional even refers to gear specifically for a "human head" (as opposed to "protective gear" generally) are (1) in the "Description of Related Art" and (2) in the description of a "Coconut and Fiber Element" embodiment that does not refer to a helmet with sliding layers. BRAIN-REV-00000707-BRAIN-REV-00000708, BRAIN-REV-00000713.

Because the '401 Provisional fails to provide written description support for any protective gear with a lining layer connected to the second or third layer and configured to conform to a human head or a portion of a human body, the '536 patent's claims are not entitled to a July 21, 2011 priority date. The earliest application referring to a lining layer was U.S. Application No. 13/554,471, filed July 20, 2012. BRAIN-REV-00000164. Although Revelyst does not concede that that language adequately supports the claimed lining layer, the earliest possible date claims 9-10, 16-17, and 19-20 of the '536 Patent are entitled to priority is July 20, 2012.

Asserted claim 20 recites "**wherein the lining layer comprises foam**." For the same reasons that the '401 Provisional does not recite a lining layer, it does not recite a lining layer comprising foam. The earliest application referring to a lining layer comprising foam was U.S. Application No. 13/554,471, filed July 20, 2012. BRAIN-REV-00000164. Although Revelyst does not concede that that language adequately supports the claimed lining layer comprising foam, the earliest possible date claim 20 of the '536 Patent is entitled to priority is July 20, 2012.

D. The Priority Date of the ’635 Patent

1. Overview of Applications in the ’635 Patent’s Priority Chain

Application No. 14/809,142 was filed on July 24, 2015, and issued as the ’635 patent on August 16, 2016. ’635 patent, Cover. The ’635 patent purports to claim priority to the ’401 Provisional, filed on July 21, 2011, through a chain of continuation applications. The purported priority applications for the ’536 patent are the following:

- The ’401 Provisional, filed on July 21, 2011.
- Application No. 13/554,471, filed on July 20, 2012, and issued as the ’319 patent.
- Application No. 14/485,993, filed on September 15, 2014, and issued as the ’561 patent. The ’561 patent was filed as a continuation of the ’319 patent.[8]
- Application No. 14/714,093, filed on May 15, 2015, and issued as the ’536 patent. The ’536 patent was filed as a continuation of the ’561 patent.

’635 Patent at Related U.S. Application Data. The ’635 patent was filed as a continuation of the ’536 patent.

2. The Earliest Priority Date the Asserted Claims of the ’635 Patent Can Claim Is July 24, 2015

The asserted claims of the ’635 patent (1-4, 8-12, 17-20) are not entitled to the claimed priority date of July 21, 2011, because the ’401 Provisional does not provide written description support for several claim elements.

All asserted claims (1-4, 8-12, 17-20) recite a “**shear mechanism**.” Neither the ’401 Provisional nor any specification or claim set filed in any of the alleged priority applications refers to a “shear mechanism.” Because the ’401 Provisional fails to provide written description support for any protective gear with a “shear mechanism,” the ’635 patent’s claims are not entitled to a July 21, 2011 priority date. The earliest application referring to a “shear mechanism” was U.S.

---

[8] *See* n.6.

Application No. 14/809,142, filed on July 24, 2015. BRAIN-REV-00000549. Although Revelyst does not concede that that language adequately supports the claimed shear mechanism, the earliest possible date the asserted ’635 Patent’s claims are entitled to priority is July 24, 2015.

Asserted claims 2-4, 10-12, and 18-20 of the ’635 patent recite a “**shear layer**.” Neither the ’401 Provisional nor any specification or claim set filed in any of the alleged priority applications refers to a “shear layer.” Because the ’401 Provisional fails to provide written description support for any protective gear with a “shear layer,” the ’635 patent’s claims are not entitled to a July 21, 2011 priority date. The earliest application referring to a “shear layer” was U.S. Application No. 14/809,142 was filed on July 24, 2015. BRAIN-REV-00000549. Although Revelyst does not concede that that language adequately supports the claimed shear layer, the earliest possible date claims 2-4, 10-12, and 18-20 of the ’635 Patent are entitled to priority is July 24, 2015.

Asserted claims 1-4 and 8 of the ’635 Patent recite “**a chin strap attached to the inner shell layer to maintain the position of the inner shell layer on the human head during rotational force impact while the outer shell layer is allowed to slide**.” Claims 9-12 and 17-20 of the ’635 Patent recite “**a chin strap attached to the inner conforming layer to maintain the position of the inner conforming layer on the human head during rotational force impact while the outer shell layer is allowed to slide**.” But the ’401 Provisional nowhere describes a chin strap, much less one that is “attached” to the inner shell or conforming layer and performs the function described. A skilled artisan would not have understood from the four corners of the specification that the inventor had possession of a chin strap attached to the inner layer of a helmet. Indeed, the only places the ’401 Provisional even refers to gear specifically for a “human head” (as opposed to “protective gear” generally) are (1) in the “Description of Related Art” and (2) in the description of a “Coconut and Fiber Element” embodiment that does not refer to sliding. BRAIN-REV-00000707-BRAIN-REV-00000708, BRAIN-REV-00000713.

Because the ’401 Provisional fails to provide written description support for any helmet with a chin strap attached to the inner shell/conforming layer, the ’635 Patent’s claims are not entitled to a July 21, 2011 priority date. The earliest application referring to a chin strap was U.S. Application No. 13/554,471, filed July 20, 2012. BRAIN-REV-00000160-BRAIN-REV-00000161. Although Revelyst does not concede that that language adequately supports the claimed position or function of the chin strap, the earliest possible date the ’635 Patent’s claims are entitled to priority is July 20, 2012.

Asserted claim 8 recites “**wherein a lining layer is connected to the inner shell layer, wherein the lining layer is configured to conform to a human head**.” But the ’401 Provisional nowhere describes a lining layer, much less one that is connected to the inner shell layer or configured to conform to a human head. A skilled artisan would not have understood from the four corners of the specification that the inventor had possession of a lining layer connected to the inner shell layer and configured to conform to a human head. Indeed, the only places the ’401 Provisional even refers to gear specifically for a “human head” (as opposed to “protective gear” generally) are (1) in the “Description of Related Art” and (2) in the description of a “Coconut and Fiber Element” embodiment that does not refer to a helmet with sliding layers. BRAIN-REV-00000707-BRAIN-REV-00000708, BRAIN-REV-00000713.

Because the ’401 Provisional fails to provide written description support for any protective gear with a lining layer connected to the inner shell layer and configured to conform to a human head, asserted claim 8 of the ’635 patent is not entitled to a July 21, 2011 priority date. The earliest application referring to a lining layer was U.S. Application No. 13/554,471, filed July 20, 2012. BRAIN-REV-00000164. Although Revelyst does not concede that that language adequately supports the claimed lining layer, the earliest possible date claim 8 of the ’635 Patent is entitled to priority is July 20, 2012.

Asserted claims 9-12 and 17-20 recite an “**inner conforming layer connected to the outer shell layer through a shear mechanism allowing the outer shell layer to slide relative to the**

inner conforming layer." To the extent that Plaintiff argues that the "inner conforming layer" is different from the "inner shell layer" recited in claim 1, neither the '401 Provisional nor any specification or claim set filed in any of the alleged priority applications refers to a "inner conforming layer." Because the '401 Provisional fails to provide written description support for any protective gear with an "inner conforming layer," claims 9-12 and 17-20 of the '635 patent are not entitled to a July 21, 2011 priority date. The earliest application referring to an "inner conforming layer" was U.S. Application No. 14/809,142, filed on July 24, 2015. BRAIN-REV-00000550. Although Revelyst does not concede that that language adequately supports the claimed inner conforming layer, the earliest possible date claims 9-12 and 17-20 of the '635 Patent are entitled to priority is July 24, 2015.

E. The Priority Date of the '909 Patent

1. <u>Overview of Applications in the '909 Patent's Priority Chain</u>

Application No. 15/050,357 was filed on February 22, 2016, and issued as the '909 patent on December 13, 2016. '909 patent, Cover. The '909 patent purports to claim priority to the '401 Provisional, filed on July 21, 2011, through a chain of continuation applications. The purported priority applications for the '909 patent are the following:

- The '401 Provisional, filed on July 21, 2011.
- Application No. 13/554,471, filed on July 20, 2012, and issued as the '319 patent.
- Application No. 14/485,993, filed on September 15, 2014, and issued as the '561 patent. The '561 patent was filed as a continuation of the '319 patent.[9]
- Application No. 14/714,093, filed on May 15, 2015, and issued as the '536 patent. The '536 patent was filed as a continuation of the '561 patent.
- Application No. 14/809,142, filed on July 24, 2015, and issued as the '635 patent. The '635 patent was filed as a continuation of the '536 patent.

---

[9] *See* n.6.

- Application No. 14/927,093, filed on October 29, 2015, and issued as U.S. Patent No. 9,289,022 (which is not asserted). The '022 patent was filed as a continuation of the '635 patent.

'909 Patent at Related U.S. Application Data. The '909 patent was filed as a continuation of the '022 patent.

2. <u>The Earliest Priority Date Asserted Claims 1-2, 9, 11-13 and 20 of the '909 Patent Can Claim Is July 24, 2015, and the Earliest Priority Date Asserted Claims 5, 8, 16, and 19 is February 22, 2016</u>

The asserted claims of the '909 patent (1, 2, 5, 8, 9, 11-13, 16, 19, 20) are not entitled to the claimed priority date of July 21, 2011, because the '401 Provisional does not provide written description support for several claim elements.

All asserted claims (1, 2, 5, 8, 9, 11-13, 16, 19, 20) recite a "**shear mechanism**." Neither the '401 Provisional nor any specification or claim set filed in any of the priority applications before Application No. 14/809,142 refers to a "shear mechanism." Because the '401 Provisional fails to provide written description support for any protective gear with a "shear mechanism," the '909 patent's claims are not entitled to a July 21, 2011 priority date. The earliest application referring to a "shear mechanism" was U.S. Application No. 14/809,142 was filed on July 24, 2015. BRAIN-REV-00000549. Although Revelyst does not concede that that language adequately supports the claimed shear mechanism, the earliest possible date the asserted claims of the '909 Patent are entitled to priority is July 24, 2015.

Asserted claims 9 and 20 recite a "**shear layer**." Neither the '401 Provisional nor any specification or claim set filed in any of the alleged priority applications before Application No. 14/809,142 refers to a "shear layer." Because the '401 Provisional fails to provide written description support for any protective gear with a "shear layer," the '909 patent's claims are not entitled to a July 21, 2011 priority date. The earliest application referring to a "shear layer" was U.S. Application No. 14/809,142 was filed on July 24, 2015. BRAIN-REV-00000549. Although

Revelyst does not concede that that language adequately supports the claimed shear layer, the earliest possible date claims 9 and 20 of the '909 Patent are entitled to priority is July 24, 2015.

Asserted claims 1-2, 5, 8-9, and 11 of the '909 Patent recite "**a chin strap attached to the inner protective shell, the chin strap and the liner layer configured to secure the inner protective shell to the human head while the outer protective shell is allowed to slide**." Claims 12-13, 16 and 19-20 of the '909 Patent recite "**a chin strap attached to the inner protective layer, the chin strap and the liner layer configured to secure the inner protective layer to the human head while the outer protective layer is allowed to slide**." But the '401 Provisional nowhere describes a chin strap, much less one that is "attached" to the inner protective shell or layer and performs the function described. A skilled artisan would not have understood from the four corners of the specification that the inventor had possession of a chin strap attached to the inner protective shell or layer of a helmet. Indeed, the only places the '401 Provisional even refers to gear specifically for a "human head" (as opposed to "protective gear" generally) are (1) in the "Description of Related Art" and (2) in the description of a "Coconut and Fiber Element" embodiment that does not refer to sliding. BRAIN-REV-00000707-BRAIN-REV-00000708, BRAIN-REV-00000713.

Because the '401 Provisional fails to provide written description support for any helmet with a chin strap attached to the inner protective shell/layer, the '909 Patent's claims are not entitled to a July 21, 2011 priority date. The earliest application referring to a chin strap was U.S. Application No. 13/554,471, filed July 20, 2012. BRAIN-REV-00000160-BRAIN-REV-00000161. Although Revelyst does not concede that that language adequately supports the claimed position or function of the chin strap, the earliest possible date the asserted claims of the '909 Patent are entitled to priority is July 20, 2012.

Asserted claims 1, 2, 5, 8, 9, and 11 recite "**a lining layer connected to the inner protective shell, the lining layer configured to reside between the inner protective shell and a human head**." Asserted claims 12-13, 16, 19, and 20 recite "**a liner layer connected to the**

inner protective layer, the liner layer configured to reside between the inner protective layer and a portion of a human body." But the '401 Provisional nowhere describes a lining layer, much less one that is connected to the inner protective shell or layer and configured reside either between the inner protective shell and a human head or between the inner protective layer and a portion of a human body. A skilled artisan would not have understood from the four corners of the specification that the inventor had possession of a lining layer connected to the inner protective shell or layer and configured reside either between the inner protective shell and a human head or between the inner protective layer and a portion of a human body. Indeed, the only places the '401 Provisional even refers to gear specifically for a "human head" (as opposed to "protective gear" generally) are (1) in the "Description of Related Art" and (2) in the description of a "Coconut and Fiber Element" embodiment that does not refer to a helmet with sliding layers. BRAIN-REV-00000707-BRAIN-REV-00000708, BRAIN-REV-00000713.

Because the '401 Provisional fails to provide written description support for any protective gear with a lining layer connected to the inner protective shell or layer and configured reside either between the inner protective shell and a human head or between the inner protective layer and a portion of a human body, the asserted claims of the '909 patent are not entitled to a July 21, 2011 priority date. The earliest application referring to a lining layer was U.S. Application No. 13/554,471, filed July 20, 2012. BRAIN-REV-00000164. Although Revelyst does not concede that that language adequately supports the claimed lining layer, the earliest possible date the asserted claims of the '635 Patent are entitled to priority is July 20, 2012.

Asserted claim 5 recites "**wherein the shear mechanism comprises a plurality of elastic bands connecting the outer protective shell from the inner protective shell**." Asserted claim 16 recites "**wherein the shear mechanism comprises a plurality of elastic bands connecting the outer protective layer from the inner protective layer**." Neither the '401 Provisional nor any specification or claim set filed in any of the alleged priority applications refers to "elastic bands." Because the '401 Provisional fails to provide written description support for any helmets

with "elastic bands," the '635 patent's claims are not entitled to a July 21, 2011 priority date. The earliest application referring to a "elastic bands" was Application No. 15/050,357 was filed on February 22, 2016. BRAIN-REV-00000666. Although Revelyst does not concede that that language adequately supports the claimed elastic bands, the earliest possible date claims 5 and 16 of the '909 Patent are entitled to priority is February 22, 2016.

Asserted claim 8 recites "**wherein the shear mechanism comprises a plurality of elastomeric elements**." Asserted claim 19 recites "**wherein the shear mechanism comprises a plurality of elastomeric elements**." Neither the '401 Provisional nor any specification or claim set filed in any of the alleged priority applications refers to "elastomeric elements." Because the '401 Provisional fails to provide written description support for any protective gear with "elastomeric elements," claims 8 and 19 of the '909 patent are not entitled to a July 21, 2011 priority date. The earliest application referring to a "elastomeric elements" was Application No. 15/050,357 was filed on February 22, 2016. BRAIN-REV-00000666. Although Revelyst does not concede that that language adequately supports the claimed elastomeric elements, the earliest possible date claims 8 and 19 of the '909 Patent are entitled to priority is February 22, 2016. To the extent Plaintiff argues that an "elastomeric truss" is the same as an "elastic band," the earliest application referring to an "elastomeric truss" is Application No. 13/554,471, filed on July 20, 2012. BRAIN-REV-00000163. Although Revelyst does not concede that that language adequately supports the claimed elastomeric elements, the earliest possible date claims 8 and 19 of the '909 Patent would be entitled to priority based on that language is July 20, 2012.

* * *

Regardless of which priority date applies, however, all asserted claims of the Patents-In-Suit are invalid for at least the reasons described herein. Revelyst further reserves the right to argue that a different priority date should apply. To the extent the priority date is post-March 16, 2013, then the references and products are prior art under the applicable provisions of the AIA as codified at 35 U.S.C. §§102 and 103.

IV. GENERAL REASONS TO MODIFY, EXTEND, OR COMBINE PRIOR ART TEACHINGS, DISCLOSURES, AND REFERENCES

A. Person of Ordinary Skill In the Art

A person of ordinary skill in the art at all relevant times ("POSITA") would have had at least the equivalent of a Bachelor's degree in mechanical engineering or a related subject or a medical degree with training in neuroscience or a related subject. A POSA also would have a general understanding of brain injury biomechanics and how helmets protect against various brain injuries. A POSA would also have two or more years' experience with design or development of helmets. Less experience working in the field of helmet design or development may be compensated by a higher education level or vice versa.

B. A POSITA Would Have Had Many Reasons to Modify, Extend, or Combine Prior Art Teachings, Disclosures, and References

Revelyst contends that the asserted claims are invalid because they are either anticipated and/or obvious in light of the prior art, the knowledge of a person of ordinary skill in the art, and/or the knowledge of a person of ordinary skill in the art in combination with the prior art. With respect to the obviousness analysis, the U.S. Supreme Court, in *KSR International Co. v. Teleflex Inc.*, 550 U.S. 398, 415 (2007) ("*KSR*"), held that patents based on allegedly new combinations of elements or components already known in a technical field may be found to be obvious. Specifically, the Court in *KSR* rejected a rigid application of the previously employed "teaching, suggestion, or motivation [to combine]" test. *Id*. at 418. "In determining whether the subject matter of a patent claim is obvious, neither the particular motivation nor the avowed purpose of the patentee controls. What matters is the objective reach of the claim." *Id*. at 419. "Under the correct analysis, any need or problem known in the field of endeavor at the time of invention and addressed by the patent can provide a reason for combining the elements in the manner claimed." *Id*. In particular, the Supreme Court emphasized the principle that "[t]he combination of familiar elements according to known methods is likely to be obvious when it does no more than yield

predictable results." *Id.* at 415. A key inquiry is whether the "improvement is more than the predictable use of prior art elements according to their established function." *Id*. at 418. The Supreme Court also has made clear that, "[f]or the same reason, if a technique has been used to improve one device, and a person of ordinary skill in the art would recognize that it would improve similar devices in the same way, using the technique is obvious unless its actual application is beyond his or her skill." *Id*. at 417.

To determine whether there is an apparent reason to combine the known elements in the fashion claimed by the patent-at-issue, a court can "look to interrelated teachings of multiple patents; the effects of demands known to the design community or present in the marketplace; and the background knowledge possessed by a person having ordinary skill in the art." *Id*. at 418. For example, obviousness can be demonstrated by showing "there existed at the time of invention a known problem for which there was an obvious solution encompassed by the patent's claims." *Id*. at 420. "[A]ny need or problem known in the field of endeavor at the time of invention and addressed by the patent can provide a reason for combining the elements in the manner claimed." *Id*. Common sense also teaches that "familiar items may have obvious uses beyond their primary purposes, and in many cases a person of ordinary skill will be able to fit the teachings of multiple patents together like pieces of a puzzle." *Id*.

Thus, the motivation to combine the teachings of the prior art references disclosed herein is found in the references themselves and/or: (1) the nature of the problem being solved; (2) the express, implied, and inherent teachings of the prior art; (3) the knowledge of persons of ordinary skill in the art; (4) the fact that the prior art is generally directed towards the same or similar problems; and/or (5) the predictable results obtained in combining the different elements of the prior art. Further, the prior art may render a patent obvious or obvious to try if there is a recognized need in the art and there are a finite number of predictable potential solutions that would be pursued with a reasonable expectation of success. *KSR Int'l Co.*, 550 U.S. at 421. A person of ordinary skill in the art would generally read a prior art reference as a whole and in the context of other

publications, literature, and general knowledge in the field. To understand and interpret any specific statement or disclosure in a prior art reference, a person of ordinary skill in the art would rely upon other information including other publications and general scientific or engineering knowledge. Revelyst therefore reserves the right to rely upon other unidentified portions of the prior art references and on other publications and expert testimony to provide context and to aid understanding and interpretation of the identified portions. Revelyst also reserves the right to rely upon other portions of the prior art references, other publications, and the testimony of experts to establish that the alleged inventions would have been obvious to a person of ordinary skill in the art, including on the basis of modifying or combining certain cited references.

Moreover, there are no objective indicia of non-obviousness for any of the asserted claims. Plaintiff bears the burden of coming forward with evidence regarding objective indicia of non-obvious and its purported nexus to the asserted claims. *ZUP, LLC v. Nash Mfg., Inc.*, 896 F.3d 1365, 1373 (Fed. Cir. 2018); *Merck & Cie v. Gnosis S.P.A.*, 808 F.3d 829, 837 (Fed. Cir. 2015) ("For objective evidence of secondary considerations to be accorded substantial weight, its proponents must establish a nexus between the evidence and the merits of the claimed invention." (citation omitted)).

Regardless of any purported objective indicia of non-obviousness, any such objective indicia cannot overcome the *prima facie* showing of obviousness, as demonstrated by the teachings of the prior art and combinations of prior art described above. Additionally, the contemporaneous invention of the purported subject matter of claims by others in the field in fact serves as objective evidence of the contrary—that the claims of the asserted claims of the Patents-in-Suit would have been obvious.

Plaintiff has failed to show that any objective indicia of non-obviousness overcome the compelling *prima facie* showing that the Patents-in-Suit would have been obvious. Revelyst reserves the right to amend and/or supplement these Invalidity Contentions to the extent Plaintiff later presents new arguments and/or evidence.

Additionally, Revelyst is not aware of any secondary considerations, such as unexpected results, satisfaction of a long-felt unmet need, commercial success, or copying that would support the non-obviousness of the asserted claims. To date, Plaintiff has provided only conclusory assertions that various objective indicia support the non-obviousness of the asserted claims, without alleging a nexus to the asserted claims or the purportedly novel aspects thereof. To the extent that Plaintiff puts forward evidence allegedly supporting secondary considerations, Revelyst reserves the right to respond to any such assertions or evidence and to challenge any nexus that evidence has to the claims.

The Patents-in-Suit purport to provide solutions that were already disclosed to problems that were already solved. As set forth below, these facts, collectively and individually, demonstrate the low value of the Patents-in-Suit.

V. THE CLAIMED CONCEPTS IN THE PATENTS-IN-SUIT WERE KNOWN

The asserted claims of the Patents-In-Suit purport to cover concepts of helmets with sliding layers, which were well known before the alleged priority date of the patents.

A. The Risks of Rotational Acceleration of the Brain from Impact Were Already Known and Considered for Helmet Design

By the late 2000s/early 2010s, the biomechanics of impacts on a human head and helmet were well known. A person's head and brain are subject to two forms of impact upon collision. A **Linear or direct impact** happens when a force vector at or near the head's center of gravity imparts linear acceleration to the head, driving a translational head and brain motion in a linear direction (forward-backward, side-to-side, up-down), and may later be followed by rotation of the head pivoting around the neck. *See* Svein Kleiven, *A Parametric Study of Energy Absorbing Foams for Head Injury Prevention*, Royal Institute of Technology, Paper Number 07-0385 ("Kleiven 2007") 4 [RVST00000932 – RVST00000951]. **Oblique or tangential impacts** instead happen when a force vector off-center from the head's center of gravity imparts both linear acceleration and rotational acceleration to the head. Kleiven 2007, 4.

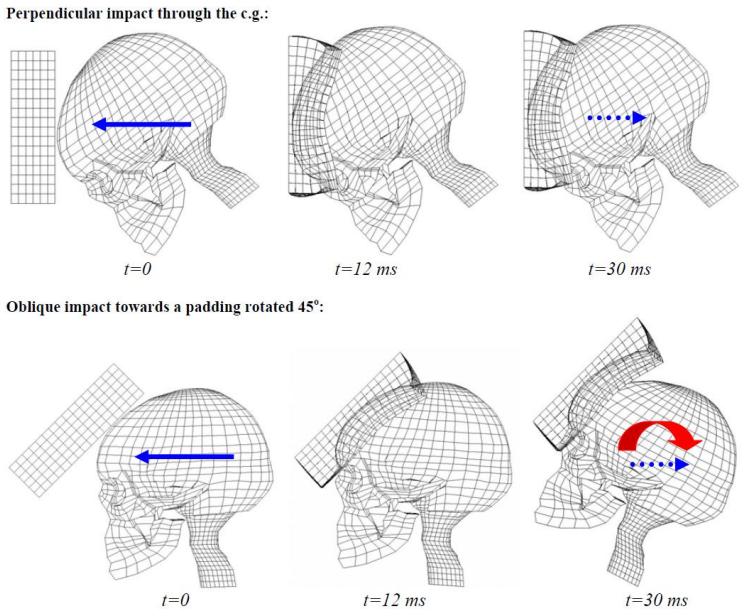

Kleiven 2007, Fig. 3.

The force causing rotational acceleration is typically described as "rotational force." *See, e.g.*, U.S. Patent Application 2004/0250340 A1 ("Piper") [RVST00001084 – RVST00001106], [0019] ("Protective headgear [] reduces or modulates angular acceleration of the head by reducing or modulating rotational forces acting upon the head."); *see also* U.S. Pub. No. 2012/0198604 ("Weber") [RVST00001218-RVST00001244], [0009] (describing reduction of "both rotational and linear forces generated from impacts to the helmets."). Most collisions involve both linear and oblique impacts to varying degrees.

Rotational forces resulting in rotational acceleration were well understood as particularly dangerous to the brain long before 2011. As early as 1985, researchers identified six grades of brain injuries resulting from rotational acceleration of the head. Ayub K. Ommaya, *Biomechanics of Head Injury: Experimental Aspects* (1985) ("Ommaya"), 250-51. These researchers proposed a "centripetal theory of cerebral concussion and concussive brain injury" and explained that brain injuries can be graded on a set of clinical syndromes, the severity of which is determined by

mechanically induced strains affecting the brain in a centripetal, or rotational, sequence of disruption. *Id.* These injuries range in severity from concussions with confusion/amnesia, to loss of consciousness, to subdural hematomas, to diffuse axonal injury, which frequently leads to a coma or death.

Researchers and helmet manufacturers understood that rotational forces exert rotational acceleration on the head and brain, which are more dangerous than linear forces. Generally, impacts on the head cause the skull (which has been hit) to accelerate first while the brain (which floats in fluid inside the skull) lags behind due to inertia. The skull and brain thus move relative to each other. David C. Viano, *Biomechanics Research: An Essential Element in the Prevention of Trauma*, 22 J. Biomechanics 403, 407 (1989) ("Viano"). That relative motion creates strain and pressure in the brain for any impact, but where linear acceleration typically causes focal, or localized, injuries, rotational acceleration causes more diffuse injuries (e.g., concussions, diffuse axonal injuries) via shear forces or shear strain on the brain. James A. Newman, *Modern Sports Helmets: Their History, Science, and Art* 75 (2007) ("Newman") [RVST00002048 – RVST00002311] ("Biomechanically, there is little argument today that it is rotational motion that dominates the nature and extent of brain injury *not* simply linear translational acceleration."); Henricus L.A. van den Bosch, *Crash Helmet Testing and Design Specifications* 55 (2006) ("Bosch") [RVST00000092 – RVST00000271] ("[R]otational accelerations have [been found to be correlated with injury] since they result in shear strains inside the brain."); *see also* Magnus Aare & Peter Halldin, *A New Laboratory Rig for Evaluating Helmets Subject to Oblique Impacts*, 4 Traffic Injury Prevention 240, 240-41 (2003) ("Aare") [RVST00000074 – RVST00000082]; Ommaya, 250; Weber, [Abstract]; Douglas H. Smith et al., *Diffuse Axonal Injury in Head Trauma*, 18 J. Head Trauma Rehabil 307 (2003) ("Smith") [RVST00002366 – RVST00002375]. Shear forces arise when rotational forces impart rotational acceleration on the brain relative to the skull due to the brain's lag due to inertia, and the brain tissue experiences parallel translational motion in different or opposing directions. *See* Viano, 407. Helmet manufacturers similarly recognized

that "[t]he most frequently sustained injuries in motorcycle crashes are injuries to the head, and many of these are caused by rotational force." Aare, 1 (Abstract); *see also* Peter Halldin et al., *Improved Helmet Design and Test Methods to Reduce Rotational Induced Brain Injuries*, 1 (Abstract) ("Halldin Paper") [RVST00000814 – RVST00000821], ("The most frequent severe brain injuries from accidents are diffuse axonal injury and subdural hematoma that both are reported to arise from rotational violence to the head."), 7 ("oblique impact" imposed "significantly higher" brain strain compared to "pure vertical impact"); M. Kis et al., *Rotational Acceleration Measurements—Evaluating Helmet Protection*, 31 Can. J. Neurol. 499, 502 ("Kis") [RVST00000927 – RVST00000931] ("[R]otational acceleration is more damaging than linear[.]").

B. Multiple Helmets Had Already Been Developed and Described to Allow Relative Sliding and Reduce Rotational Acceleration of the Brain Including Connection of Layers by Sliding Layers

Helmets and typical components of helmets were well understood before 2011. Typical helmets contained:

- A hard outer layer, typically made from materials such as polycarbonate or fiber-reinforced plastic and designed to distribute load from shocks, prevent penetration, and prevent abrasion injuries;
- At least one softer, foam-based layer next to the harder outer layer, typically directly affixed (for the outermost insert) to the harder outer layer to absorb direct forces. These layers were often made from, e.g., expanded polystyrene (EPS) foam or expanded polypropylene (EPP) foam of varying densities depending on specific use cases (e.g., whether the helmet should be designed for multiple smaller impact events or one larger impact event);
- A flexible foam-based lining that conforms to the head, typically made from foams such as "low-density, flexible, open-celled, polyurethane or PVC foams" and covered by fabric that directly touches the head; and

- A chin strap to help retain the helmet on the head and keep it in position.

See, e.g., Bosch, 17; U.S. Patent No. 6,996,856 ("Puchalski") [RVST00001107-RVST00001128], 7:19-64, Fig. 1. An exemplary helmet is below:

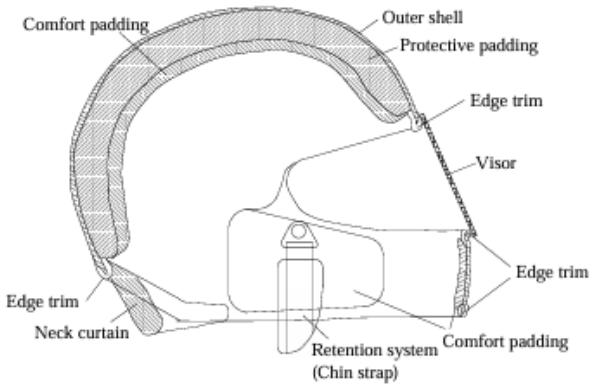

Figure 1.2: Cross section of a full-face motorcycle helmet [UN, 2000].

Bosch, 17; *see also* Newman-2007, *supra*, at 21-29.

The outermost layer is made of material hard enough to prevent penetration and distribute impact forces over a broad area of the helmet for the underlying material to absorb. "The vast majority of [outer] shells, or the first layer of a helmet, are made from polycarbonate—a *robust* material . . . ." Jans, *Bike Helmet Anatomy*, https://www.jans.com/anatomy-of-a-bike-helmet?srsltid=AfmBOooriodHXEC54CbWtD0foK5WSXu8-gN0vaAh1lq96kCKdGHJ68FJ (emphasis added) [RVST00001592 – RVST00001594]. In contrast, the underlying layers in a helmet are typically made of softer material. EPS, for example, is a foam found in take-out containers and drink cups (Bicycle Helmet Safety Institute, *Bicycle Helmet Liners: Foam and Other Materials*, https://helmets.org/liners.htm) [RVST00001579 – RVST00001594], and its

compressive strength is at least three orders of magnitude weaker than that of polycarbonate.[10] EPS and other foam-based materials (e.g., EPP) have the purpose of compressing, crushing, or shearing to absorb energy from impacts and increase the duration over which the total force is imparted onto the head (reducing linear and rotational accelerations).

As of 2011, helmet manufacturers had similarly developed a number of helmets to manage rotational forces. These helmets all followed variations on a theme: the helmets include at least two layers connected in a way that they move/slide relative to each other. This relative motion is achieved primarily either by providing an interface or slip pane on which the outer layer would slide relative to the inner layer (for example, via a low-friction layer interface) along with additional stopping mechanisms to deform and further absorb energy, or by use of an intermediate layer with material that would deform/shear upon experiencing rotational and shear forces, thus absorbing energy and effectuating relative sliding between layers, or translation of one layer parallel to another layer or a surface (for example, via fluid interfaces and/or compliant or deformable mechanical connectors). *See, e.g.*, Piper cl. 1, [0015], [0017], [0122] (discussing "overlapped inner and outer layers attached so as to permit frictional sliding of at least one area of the outer layer over the inner layer" and "sliding of at least one area of the outer layer relative to the inner layer" with "a flowable material intermediate the layers" such as "solid particulates, liquid, gel or gas"). This relative sliding reduces rotational forces and rotational acceleration on the head and brain, and thus also shear strain.

These strategies were present in numerous helmet disclosures before 2011. One of the first was a patent application (WO01/45526) from Von Holst, which described an outer shell (2) and

---

[10] For example, two readily accessible industry estimates for EPS and polycarbonate compressive strength give 5-60 psi and 12,000-18,000 psi, respectively. International Polymer Solutions Inc., *Polycarbonate*, https://www.ipolymer.com/pdf/Polycarbonate.pdf [RVST00002359 – RVST00002360]; Universal Foam Products, *Physical Properties of Expanded Polystyrene*, https://univfoam.com/wp-content/uploads/2015/07/EPS-Data-Sheet.pdf [RVST00001603].

an inner (3) shell with an intermediate "sliding layer 4" for "displacement between" the outer and inner shells:

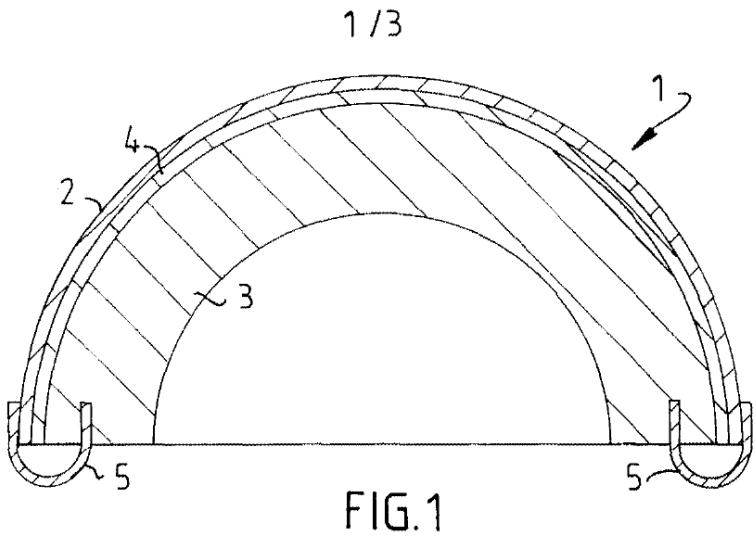

Von Holst, 4:10-17, Fig. 1 [RVST00001152 – RVST00001171]. Von Holst described how this helmet reduces "injurious forces" when the outer shell is "displaced relative to the inner shell during simultaneous absorption of rotational energy." *Id.*, 2:34-38; *see also id.*, 8:12-18. Von Holst similarly recognized that incorporating multiple sliding layers was possible, describing another embodiment with "two sliding layers 4, between which there is an intermediate shell 6." *Id.*, 6:2-6.

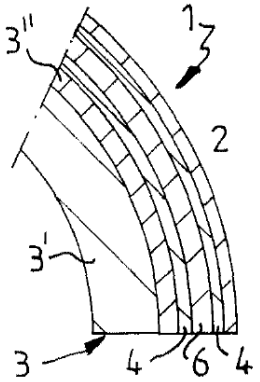

FIG.3b

Von Holst, Fig. 3b. This design strategy was further iterated on and described in various references, including at least Halldin Paper, 2 (helmet with "low-friction layer," allowing "outer shell …to move relative to the liner" to reduce "rotational violence"); NJ Mills & A. Gilchrist, Bicycle Helmet Design, 220 J. Materials: Design and Applications, 167, 173-74 ("Mills-2006") [RVST00000976 – RVST00000989] ("low friction layers" to reduce "rotational acceleration") as well as in patent applications such as WO 2011/087435 A1 ("Halldin-I") [RVST00000877 – RVST00000879], WO 2011/139224 A1 ("Halldin-II") [RVST00000822 – RVST00000850], and US2010/0115686 ("Halldin-III") [RVST00002629-RVST00002635].

Von Holst, Halldin Paper, and Mills-2006 are far from the only references identifying and providing solutions for rotational energy via relative sliding. At least the following references also disclosed strategies for providing relative sliding and absorbing rotational and shear forces in helmets:

- As detailed in claim chart Exhibits A through E, U.S. Pub. No. 2012/0139172 ("Hawkins") [RVST00002651-RVST00002664], Puchalski, Weber, Kleiven, Piper, U.S. Pub. No. 2006/0059606 ("Ferrara 2006") [RVST00000739-RVST00000763], U.S. Pub. No. 2007/0190293 ("Ferrara 2007") [RVST00000709-RVST00000738],

Von Holst, Halldin-I, Halldin-II, Halldin-III, JP2006016740 ("Dotsuko") [RVST00002014-RVST00002019; RVST00001595-RVST00001602], U.S. Patent No. 3,872,511 ("Nichols") [RVST00000990-RVST00000994], and U.S. Pub. No. 2004/0117896 ("Madey") [RVST00002032-RVST00002047] all disclose multi-layered helmets where an outer layer is configured such that it can move or slide relative to an inner layer.

- WO1996/014768 ("Phillips") [RVST00002326-RVST00002358] describing a helmet with an "an intermediate layer" that is "interposed between [a] hard shell and [an] outer layer, the intermediate layer facilitating relative movement between the shell and outer layer" and "a friction reducing material or lubricant agent which facilitates the movement between the outer layer and [t]he helmet shell." Phillips, 4.
- US2001/0032351 ("Nakayama") [RVST00002312-RVST00002325] describing a helmet with a "layer of [an] absorbent elastic body" "provided along the spherical surface" and explains that "outer liner and inner liner can slip relatively easily, so that a degree of freedom in rotational direction becomes large and rotational component of the shock force can be absorbed more effectively." Nakayama, [0012]; *see also id.* at [0010] ("[W]hen shock force acts on the helmet, rotational acceleration[] . . . is absorbed effectively.").
- Halldin-III describes a locking device for a helmet with an outer layer, inner layer, and a sliding layer that "facilitates displacement of the outer layer relatively [to] the inner layer at an oblique impact towards the protective helmet." The locking device has a "layer-guiding member 10 [that] can be elastic in its longitudinal direction (L) and in the direction of propagation plane (P) of the inner layer and the outer layer." Halldin-III at cl. 1; *see also id.* at FIGs. 1A-B.

- *See also, e.g.*, US2014/0090155 ("Johnson") [RVST00002665-RVST00002691]; US2008/0066217 ("Depreitere") [RVST00002580-RVST00002593]; WO 2008/046196 ("Cripton") [RVST00002523-RVST00002579]

C. Comfort Layers Conforming to the Human Head and/or Made of Foam and Devices that Allow Adjustment to Fit the Head Were Already Known and Considered for Helmet Design Including Specifically Helmets that Allow Relative Sliding and Reduce Rotational Acceleration of the Brain

Foam comfort liners are standard in most modern helmets. "Modern (i.e. post 1975) cycling helmets have typically used small polyester foam pads that can be strategically placed inside the helmet by the wearer to accommodate different head shapes and sizes." Newman at 47. Similarly, "[t]he modern motorcycle helmet" generally contains a "comfort padding liner." Bosch, 2. "The purpose of the comfort padding liner is to increase the wearing comfort of the helmet and to provide a good fit on the head. It consists of low-density, flexible, open-celled, polyurethane or PVC foams and is often faced with a cloth layer." *Id.* Comfort liners, including foam comfort liners, are ubiquitous in prior art helmets and references describing helmets, including helmets facilitating sliding motions. *See, e.g.*, Weber at [0045] (helmet contains "a 'comfort' liner 123 configured to closely surround the head of the wearer"), [0036], [0050]; Piper at [0109] (disclosing a "comfort liner 212 next to the head 200 of the wearer" that is, e.g., "lower density, open-cell foam material that easily conforms to the head"); Von Holst at 4:26-29 (describing an inner shell 3 with softer inner layer 3' "made of … polyurethane foam"); Puchalski at 1:52-55 (a "padding or cushioning may also be provided along the inside of the shell for increased comfort, better fit and to assist in the absorption of any impact forces"), cl. 9; Ferrara 2006 (US2006/0059606) at [0060] ("[I]n FIG. 6, a compressible (e.g., foam) internal liner 32′ can then be added (step 80) to the multilayer shell 30′….The shape of the internal liner 32′ conforms to the general shape of the shell 30′ and to the shape of a wearer's head."); U.S. Pub. No. 2006/0070170 ("Copeland") [RVST00000272-RVST00000283], [0022-23] (describing "[a] shock absorber insert 18 [] received in … recesses" that "includes a foam member 19"), cl. 17, Fig. 2); Ferrara 2007

(US2007/0190293) at [0101] ("Therefore, the bellows capsules as a whole provide a relatively soft and comfortable inner liner next to the wearer's head."); Madey at [0025] ("Helmet 40 comprises an inner helmet layer (e.g., an energy-absorbing layer) 41, a helmet retention system (e.g., straps 42 and foam padding inserts, not shown) to affix inner helmet layer 41 to a wearer's head…."); POC Trabec Race Helmet; POC Receptor Backcountry MIPS Helmet; POC Cortex DH; Burton RED HiFi Helmet; Lazer Rider Superskin Helmet; Back on Track EQ2. Foam comfort liners in particularly were well-known and understood to have both fitting benefits as well as safety benefits such as "sweat and heat management characteristics." *See, e.g.*, Piper, at [0109].

Similarly, adjustment devices were standard components of inner shell layers in various helmets to further adjust fit. As of the 2000s, "[n]ewer bicycling, equestrian and lacrosse helmets, and even the occasional hockey helmet, use an adjustment device that can tighten the helmet on the head." Newman at 47. As one example, Halldin-II (WO2011/139224) describes a helmet facilitating relative sliding that further contains "an adjustment device 6 for adjusting the diameter of the head band for the particular wearer." Halldin-II, at [0045].

D. Chin straps Connected to an Inner Layer Were Already Known in Helmet Design Including in Helmets that Allow Relative Sliding and Reduce Rotational Acceleration of the Brain

Like comfort liners, chin straps are common in nearly every helmet, and they are critical for maintaining proper positioning and helmet retention. Bosch, 2. "Every helmet retention system is usually made up basically of four *subassemblies*: the chin straps, hardware to attach the chin straps to the rest of the helmet, a fastening device and some means to adjust the straps under the wearer's chin …. Usually, the chin strap assembly is a major element of the retention system." Newman at 51 (emphasis in original). Regardless of the type of helmet, POSITAS had limited options for placement of the chin strap: it could attach to an outer layer, an intermediate layer, or an inner layer. Many helmet designs before 2011 incorporated chin straps on inner layers. *See, e.g.*, U.S. Patent No. 5,353,437 ("Field") [RVST00001970-RVST00001985], 2:51-52, 5:48-51; Mills-2006 169; U.S. Patent No. 5,129,108 ("Copeland 1991") [RVST00002508-

RVST00002522], Fig. 3; U.S. Patent No. 4,012,794 ("Nomiyama") [RVST00002705-RVST00002710], 2:30-31, 2:14-16; U.S. Patent No. 7,770,239 ("Goldman") [RVST00002614-RVST00002628], 1:19-32. And although POSITAS could take any one of these routes depending on specific goals or helmet use cases, POSITAS manufacturing helmets with sliding components before 2011 preferentially attached helmets to the inner layer. For example, Dotsuko discloses that, in a helmet designed to have layers slide relative to one another, "since the chin strap 90 is attached to the liner 30, it becomes easier for the shell 20 to rotate relative to the liner 30 (that is, the inner liner 50), which is fixed to the head He by the chin strap 90. When impact energy Ea acts on the shell 20, the liner 30 (i.e., the inner liner 50) remains in place while the shell 20 alone relatively rotates in the direction of the force, thereby absorbing the impact energy Ea." Dotsuko (JP2006/016740), at [0022], Fig. 3. Madey also discloses, in a helmet designed to have layers slide relative to one another, that a "[h]elmet 40 comprises an inner helmet layer (e.g., an energy-absorbing layer) 41, a helmet retention system (e.g., straps 42 and foam padding inserts, not shown) to affix inner helmet layer 41 to a wearer's head….". Madey at [0025]. Similarly, Puchalski describes a helmet with an outer and inner layer that slide relative to one another and states that "[a]lthough not essential, most preferably, the helmet chin straps 16 are secured to the peripheral edge of the inner panel 126, along each of its sides." Puchalski at 12:1-3. And Field describes another helmet with sliding outer and inner shells used in combination with a body protection device, and it states that "[i]nner helmet 40 is covered by a plastic surface or microshield 41 to facilitate movement of the head in the helmet. This lining surrounds inner pads 42, and incorporates chin strap 43, which functions to hold the inner helmet 40 in place relative to the wearer's head."). *Id.* at 5:46-51. And Nomiyama describes another helmet with sliding shells and states that "a variety of well known paddings or safety straps can be installed within the inner shell to provide the wearer not only protection, but also comfort heretofore unobtainable in a safety helmet." Nomiyama at 2:14-16.

VI. INVALIDITY CONTENTIONS FOR THE ASSERTED PATENTS

The asserted claims of the Patents-In-Suit purport to cover a combination of basic concepts, all of which were well known before the alleged priority date of the patents as described in Section V above and in the prior art references listed below.

A. Identification of Invalidating Prior Art

Subject to the foregoing and pursuant to the agreed schedule, the prior art references listed below, along with any further prior art references or admissions listed on the face or in the specifications of the Patents-In-Suit or any related patent applications, anticipate or render obvious (alone or in combination) each of the asserted claims of the Patents at least under Plaintiff's apparent infringement theories and/or claim interpretations. In addition to the below enumerated references, Revelyst reserves the right to rely upon additional prior art as discovery progresses, including additional product prior art and information ascertained through ongoing third-party discovery.

In addition to the disclosures provided below, Revelyst attaches separate charts detailing its invalidity contentions on a claim-by-claim basis. *See* Exhibits A-1 through A-12, A-14 through A-27, A-30, B-1 through B-27, B-30, C-1 through C-27, C-30, D-1 through D-12, D-14 through D-27, D-29 through D-30, E-1 through E-12, and E-14 through E-30. Moreover, Revelyst hereby discloses and reserves the right to rely upon all references incorporated by reference into the references disclosed below and in the accompanying charts.[11]

[11] To the extent any of the cited references is found not to predate the Patent-in-Suit for which it is cited, it remains relevant, for example, to show the technological background and/or secondary considerations of obviousness and/or obviousness based on simultaneous/contemporaneous invention by others.

1. **Patent References**

No	Reference	Type of Art	Publication Date (Filing Date)	Short Name	Bates Range
1	U.S. Pub. No. 2012/0139172 to Hawkins	§ 102(a), (e) AIA § 102(a)(1), (a)(2)	June 7, 2012 (November 29, 2008)	Hawkins	RVST00002651-RVST00002664
2	U.S. Patent No. 6,996,856 to Puchalski	§ 102(a), (b) AIA § 102(a)(1), (a)(2)	February 14, 2006 (April 12, 2005)	Puchalski	RVST00001107-RVST00001128
3	U.S. Pub. No. 2012/0198604 to Weber	§ 102(e) AIA § 102(a)(1), (a)(2)	August 9, 2012 (February 9, 2011)	Weber	RVST00001218-RVST00001244
4	U.S. Pub. No. 2013/0122256 to Kleiven	§ 102(a) AIA § 102(a)(1), (a)(2)	May 16, 2013 (May 12, 2011)	Kleiven	RVST00000932-RVST00000951
5	U.S. Pub. No. 2004/0250340 to Piper	§ 102(a), (b) AIA § 102(a)(1), (a)(2)	December 16, 2004 (February 4, 2004)	Piper	RVST00001084-RVST00001106
6	U.S. Pub. No. 2006/0059606 to Ferrara	§ 102(a), (b) AIA § 102(a)(1), (a)(2)	March 23, 2006 (February 16, 2005)	Ferrara 2006	RVST00000739-RVST00000763
7	U.S. Pub. No. 2007/0190293 to Ferrara	§ 102(a), (b) AIA § 102(a)(1), (a)(2)	August 16, 2007 (March 22, 2007)	Ferrara 2007	RVST00000709-RVST00000738
8	WO Pub. No. 01/45526 to Von Holst	§ 102(a), (b) AIA § 102(a)(1), (a)(2)	June 28, 2001 (December 21, 1999)	Von Holst	RVST00001155-RVST00001171
9	WO Pub. No. 2011/087435 to Halldin	§ 102(a) AIA § 102(a)(1), (a)(2)	July 21, 2011 (January 11, 2011)	Halldin-I	RVST00000851-RVST00000876
10	WO Pub. No. 2011/139224 to Halldin	§ 102(a), (e) AIA § 102(a)(1), (a)(2)	November 10, 2011 (May 3, 2011)	Halldin-II	RVST00000822-RVST00000850
11	JP2006016740 to Dotsuko	§ 102(a), (b) AIA § 102(a)(1), (a)(2)	January 19, 2006 (July 5, 2004)	Dotsuko	RVST00002014-RVST00002019; RVST00001595-RVST00001602
12	U.S. Patent No. 4,213,202 to Larry	§ 102(a), (b)	July 22, 1980 (March 2, 1979)	Larry	RVST00000952-RVST00000957

No	Reference	Type of Art	Publication Date (Filing Date)	Short Name	Bates Range
13	U.S. Pub. No. 2006/0070170 to Copeland	§ 102(a), (b) AIA § 102(a)(1), (a)(2)	April 6, 2006 (October 6, 2004)	Copeland	RVST00000272-RVST00000283
14	U.S. Patent No. 3,872,511 to Nichols	§ 102(a), (b) AIA § 102(a)(1), (a)(2)	March 25, 1975 (March 11, 1974)	Nichols	RVST00000990-RVST00000994
15	U.S. Pub. No. 2004/0117896 to Madey	§ 102(a), (b) AIA § 102(a)(1), (a)(2)	June 24, 2004 (October 4, 2002)	Madey	RVST00002032-RVST00002047
16	U.S. Pub. No. 2013/0333100 to Erb	§ 102(a) AIA § 102(a)(1), (a)(2)	December 19, 2013 (June 18, 2012)	Erb	RVST00002594-RVST00002613
17	U.S. Pub. No. 2010/0115686 to Halldin	§ 102(a), (b) AIA § 102(a)(1), (a)(2)	May 13, 2010 (February 20, 2008)	Halldin-III	RVST00002629-RVST00002635
18	U.S. Pub. No. 2013/0019384 to Knight	AIA § 102(a)(1)	January 24, 2013 (July 20, 2012)	Knight	RVST00002692-RVST00002704
19	U.S. Pub. No. 2007/0068755 to Hawkins	§ 102(a), (b) AIA § 102(a)(1), (a)(2)	March 29, 2007 (February 25, 2005)	Hawkins 2007	RVST00002636-RVST00002650

2. <u>Items Offered for Sale, Sold or Publicly Known and Used</u>[12]

No	Item Offered for Sale or Publicly Used or Known	Type of Art	Date Offered for Sale, Sold or First Public Use	Identity of the Person or Entity
1.	Back on Track EQ2	§ 102 (a)/(b) AIA § 102(a)(1)	2009	Back on Track, BOT LLC
2.	Xenith XI	§ 102 (a)/(b) AIA § 102(a)(1)	2007 or 2009	Xenith
3.	Schutt Ion 4D	§ 102 (a)/(b) AIA § 102(a)(1)	2007 or 2010	Schutt Sports

[12] Third-party discovery is ongoing, and more information is expected regarding the features of the items listed in this chart. Contentions based on these items are on information and belief. Revelyst reserves the right to supplement or amend its positions after more information is obtained through third party discovery.

No	Item Offered for Sale or Publicly Used or Known	Type of Art	Date Offered for Sale, Sold or First Public Use	Identity of the Person or Entity
4.	Schutt DNA Pro Plus	§ 102 (a)/(b) AIA § 102(a)(1)	2010	Schutt Sports
5.	POC Trabec Race	§ 102 (a)/(b) AIA § 102(a)(1)	2010 or 2012	POC
6.	POC Receptor Backcountry MIPS Helmet	§ 102 (a)/(b) AIA § 102(a)(1)	2010 or 2011	POC
7.	POC Cortex DH	§ 102 (a)/(b) AIA § 102(a)(1)	2010	POC
8.	TSG Kraken	§ 102 (a)/(b) AIA § 102(a)(1)	2010	TSG, Technical Safety Gear
9.	Lazer P-Nut MIPS Helmet	§ 102 (a)/(b) AIA § 102(a)(1)	2010	Lazer
10.	Lazer Rider Superskin Helmet	§ 102 (a)/(b) AIA § 102(a)(1)	2009	Lazer
11.	Burton RED HiFi Helmet	§ 102 (a)/(b) AIA § 102(a)(1)	2011	Burton

3. <u>Other References</u>

In addition to the specific references identified above, Revelyst may rely on documents cited on the face of the Patents-In-Suit and related patents, patent publications, file histories and applications, and other documents cited herein and otherwise produced pursuant to the agreed schedule to illustrate the state of the art, the knowledge possessed by a person of ordinary skill, to address alleged secondary considerations, or for other context surrounding invalidity that is commonly introduced in a patent trial.

4. <u>Dynamic Drinkware</u>

As discussed in Section III above, all of the asserted claims are not entitled to their earliest priority dates. In addition, to the extent necessary, the below analysis of Weber and Halldin-II demonstrates that these references are entitled to their earliest priority dates and are prior art to all of the asserted claims. Revelyst reserves the right to supplement its analysis under *Dynamic Drinkware, LLC v. National Graphics, Inc.*, 800 F.3d 1375 (Fed. Cir. 2015), with additional art,

evidence, and arguments based on additional asserted claims or claim construction positions or priority date positions advanced by Plaintiffs in accordance with the applicable law.

a) Weber

Weber is prior art to all of the asserted claims in the asserted patents. The Weber provisional application 61/462,914 ("Weber Provisional") [RVST00002428-RVST00002443] provides written description support for the portions of Weber's disclosures relied upon in these Invalidity Contentions, as shown below.

Weber	Weber Provisional
FIG. 4 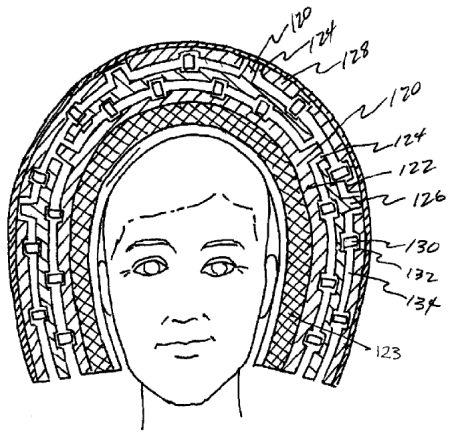 Fig. 4	FIG. 3 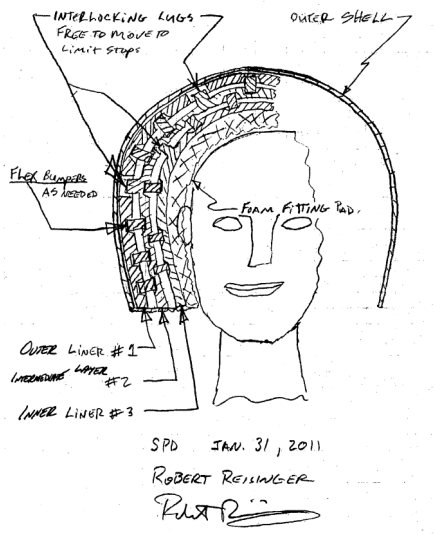 FIG. 3
[0002] "One or more embodiments of the present invention generally relate to safety equipment, and more particularly, to protective helmets that protect the human head against repetitive impacts, moderate impacts and severe impacts so as to significantly reduce the likelihood of both translational and rotational brain injury and concussions."	p. 1 "The present invention relates to protection of the human head in the event of an accident where an individual is wearing a safety helmet. In particular, the present invention will reduce the likelihood of rotational brain injury, shearing of brain matter, linear compression, and / or concussion in accident situations."
[0003]	p. 1

"Action sports (e.g., skateboarding, snowboarding, bicycle motocross (BMX), downhill mountain biking, and the like), motorsports (e.g., off-road and on-road motorcycle riding and racing) and traditional contact sports (e.g., football and hockey) continue to grow at a significant pace throughout the world as each of these sports expands into wider participant demographics. While technology and sophisticated training regimes continue to improve the performance capabilities for such athletes/participants, the risk of injury attendant to these activities also increases. To date, helmet-type head protection devices have not experienced any significant new technologies that improve protection of the athlete's head and brain in the event of an impact incident outside the advent of duel density foam liners made of greater thickness utilizing softer foams in general. Current "state of the art" helmets are not keeping pace with the evolution of sports and the capabilities of athletes. At the same time, science is providing alarming data related to the traumatic effects of both repetitive but moderate, and severe impacts to the head. While concussions are at the forefront of current concerns, rotational brain injuries from the same concussive impacts are no less of a concern, and in fact, are potentially more troublesome."	"**Background of the invention:** Action sports (e.g., skateboarding, snowboarding, BMX, downhill mountain biking, etc.), motorsports (e.g., off-road and on-road motorcycle riding and racing) and traditional contact sports (e.g., football and hockey) continue to grow at a significant rate throughout the world as each of these sports expand into wider participant demographics. While technology and sophisticated training regimes continue to improve the performance capabilities for such athletes/participants, the risk of injury also increases. To date, helmet protection devices have not experienced any material new technology that improves protection of the athlete's head and brain in the event of an accident. The current "state of the art" helmets are not keeping pace with the evolution of sports and the capabilities of athletes. At the same time, science is providing alarming data related to the negative effects from concussive impacts to an athlete's head. While concussions are at the forefront of concerns in each of the above-mentioned sporting activities, rotational brain injuries from the same concussive impacts are no less of a concern, and in fact, are potentially more troublesome."
[0006] "[G]iven the distribution of brain matter, even direct linear or translational impacts can generate shear forces within the brain sufficient to cause rotational brain injuries."	p. 1 "[T]he present invention will reduce the likelihood of rotational brain injury, shearing of brain matter, linear compression…." "When force applied to the helmet exceeds the capability of the combined resources of the helmet, including the interior padding, to manage the force, energy that is not absorbed by the helmet is transferred to the head and brain of the user. This may result in moderate concussion or severe brain injury, including a rotational brain injury depending on the type of impact energy, and the severity of the impact energy."

[0008] "Safety helmets are designed to absorb and dissipate as much energy as possible over the greatest amount of time possible. Whether the impact causes direct linear or translational acceleration/deceleration forces or angular acceleration/deceleration forces, the helmet should eliminate or substantially reduce the amount of energy transmitted to the user's head and brain."	p. 2 "The desired function of helmets is to absorb and dissipate as much energy as possible, in the shortest amount of time possible, be it direct linear translational energy, or angular acceleration or deceleration energy in the event of any given accident situation, without transmitting that energy to the wearer's head form and brain. The goal of these helmets is to reduce or significantly diminish the risk of head and brain injury resulting from these various situations."
[0009] "[O]mnidirectional impact energy management systems are provided for protective helmets that can significantly reduce both rotational and linear forces generated from impacts to the helmets over a broad spectrum of energy levels."	p. 2 "The present invention is an omni-directional impact energy management system for a helmet. The present invention seeks to significantly reduce the rotational and linear forces on the brain that are generated from impacts to a helmet."
[0010] "The novel techniques, for one or more embodiments, enable the production of hard-shelled safety helmets that can provide a controlled internal omnidirectional relative displacement capability, including relative rotation and translation, between the internal components thereof. The systems enhance modern helmet designs for the improved safety and well being of athletes and recreational participants in sporting activities in the event of any type of impact to the wearer's head. These designs specifically address, among other things, the management, control, and reduction of angular acceleration forces, while simultaneously reducing linear impact forces acting on the wearer's head during such impacts."	p. 1 "Field Of The Invention: The present invention relates to protection of the human head in the event of an accident where an individual is wearing a safety helmet. In particular, the present invention will reduce the likelihood of rotational brain injury, shearing of brain matter, linear compression, and/or concussion in accident situations." p. 2 "The desired function of helmets is to absorb and dissipate as much energy as possible, in the shortest amount of time possible, be it direct linear translational energy, or angular acceleration or deceleration energy in the event of any given accident situation, without transmitting that energy to the wearer's head form and brain. The goal of these helmets is to reduce or significantly diminish the risk of head and brain injury resulting from these various situations." … "The present invention allows a controlled internal omni-directional displacement

	capability, including rotation, among the interior components of a hard shelled safety helmet.
[0034] "In accordance with one or more embodiments of this disclosure, omnidirectional impact energy management systems for helmets are provided that can significantly reduce both rotational and linear forces generated from impacts imparted to the helmets. The systems enable a controlled internal omnidirectional relative displacement capability, including relative rotational and translational movement, between the internal components of a hard shelled safety helmet."	p. 2 "The present invention allows a controlled internal omni-directional displacement capability, including rotation, among the interior components of a hard shelled safety helmet. Generally, the present invention relates to a safety helmet comprising at least two layers housed within the hard exterior shell of the helmet. One of these layers, the inner liner, is in contact with the wearer's head. Another layer, the outer liner, is affixed to the hard outer shell of the helmet. One or more intermediate layers may be disposed between the inner and outer layers. These layers may be formed of any suitable material, including without limitation such materials commonly used in the industry such as expanded polystyrene (EPS). p. 3 "The engagement between the inner and outer liners allows for limited, controlled, omni-directional movement to reduce the transfer of forces and resulting acceleration originating from the hard outer shell of the helmet. The relative movement of the inner and outer layers is controlled via various means of suspension, dampening, and motion controlling components that engage the liners.
[0035] "One or more embodiments disclosed herein are particularly well suited to helmets that can provide improved protection from both potentially catastrophic impacts and repetitive impacts of varying force that, while not causing acute brain injury, can cause cumulative harm. The problem of cumulative brain injury, i.e., Second Impact Syndrome (SIS), is increasingly recognized as a serious problem in certain sports, such as American football, where much of the force of non-catastrophic contact is transferred to the head	p. 1 "Background of the invention: Action sports (e.g. skateboarding, snowboarding, BMX, downhill mountain biking, etc.), motorsports (e.g. off-road and on-road motorcycle riding and racing) and traditional contact sports (e.g. football and hockey) continue to grow at a significant rate throughout the world as each of these sports expand into wider participant demographics. While technology and sophisticated training regimes continue to improve the performance capabilities for such athletes/participants, the risk of injury also

of the wearer. In various example embodiments, isolation dampers are configured with specific flex and compression characteristics to manage a wide range of repetitive and severe impacts from all directions, thus addressing the multitude of different risks associated with diverse sports, such as football, baseball, bicycle riding, motorcycle riding, skateboarding, rock climbing, hockey, Snowboarding, Snow skiing, auto racing, and the like.”	increases. To date, helmet protection devices have not experienced any material new technology that improves protection of the athlete's head and brain in the event of an accident. The current "state of the art" helmets are not keeping pace with the evolution of sports and the capabilities of athletes. At the same time, science is providing alarming data related to the negative effects from concussive impacts to an athlete's head. While concussions are at the forefront of concerns in each of the above-mentioned sporting activities, rotational brain injuries from the same concussive impacts are no less of a concern, and in fact are potentially more troublesome.”
[0036] “In accordance with one or more example embodiments hereof, safety helmets can comprise at least two layers. One of these layers, an inner liner, is disposed in contact with the wearer's head, either directly or via a fitment or so-called ‘comfort liner.’”	p. 2, 3, 4 “The present invention allows a controlled internal omni-directional displacement capability, including rotation, among the interior components of a hard shelled safety helmet. Generally, the present invention relates to a safety helmet comprising at least two layers housed within the hard exterior shell of the helmet. One of these layers, the inner liner, is in contact with the wearer’s head. Another layer, the outer liner, is affixed to the hard outer shell of the helmet. One or more intermediate layers may be disposed between the inner and outer layers.” “The liners may be multi or single-density EPS liners or may be comprised of any other suitable materials. The inner liner may be static and engaged directly by the individual's head through the use of a comfort liner and or fit pads common in all sporting helmets.” “An engineered limit (or stop) may.be designed into and between the interior liners to prevent over-rotation or displacement between the interior liners due to the displacement of the

	exterior helmet shell assembly during an accident. In one exemplary embodiment the inner liner is provided with multiple flanges extending outward from the inner liner to act as rotational 'stops' by impacting with the edge of the outer liner. In other exemplary embodiments, an additional layer is inserted between the inner liner and outer liner. This layer, like the inner and outer liners, may be formed of EPS or any other suitable materials."
[0037] "In an example embodiment, an outer surface of an inner liner is coupled to[13] an inner surface of an outer liner, which can have an outer surface affixed to an inner surface of the hard outer shell of the helmet, with shock absorbing and dampening components that enable controlled, omnidirectional relative rotational and translational displacements to take place between the inner and outer liners. Thus the two liners are coupled with each other in such a way that they can displace relative to each other omnidirectionally in response to both angular and translational forces from a glancing or direct below to the hard outer shell of the helmet. The engagement between the inner and outer liners enables a controlled, omnidirectional relative movement between the two liners to reduce the transfer of forces and resulting accelerations originating from the hard outer shell of the helmet to the head and brain of a wearer."	p. 2-3 "In an exemplary embodiment of the invention, the outer surface of the inner liner is connected to the inner surface of the outer liner with components that will allow for controlled omnidirectional relative displacement between the liners. Thus, the two liners are engaged with each other such that they can displace relative to each other in response to angular forces from a glancing indirect or direct blow to the hard outer shell of the helmet. The engagement between the inner and outer liners allows for limited, controlled, omni-directional movement to reduce the transfer of forces and resulting acceleration originating from the hard outer shell of the helmet."
[0038] "The relative movement of the inner and outer layers or liners can be controlled via various suspension, dampening, and motion controlling components that are disposed between the liners and couple them together for relative movement. In some embodiments, additional liners or partial liners can be	p. 3 "The relative movement of the inner and outer layers is controlled via various means of suspension, dampening, and motion controlling components that engage the liners. Additional layers or partial layers may be inserted between the inner liner and the outer

[13] Weber uses the term "coupled" in certain sections where Weber Provisional uses the term "connect" or engage." Weber uses the terms interchangeably. *E.g.,* Weber at [0037].

inserted between the inner and outer liners. Thus, the energy absorbing structure can comprise various liner components, with or without air gaps between them, that enable such controlled omnidirectional relative displacement between one or more of the liners."	liner in such a way that would comprise various layers of components, with or without air gaps between them, that would allow for such controlled omni-directional relative displacement between one or more of the layers."
[0039] "[T]he outer liner 102 is attached directly to the inside surface of the helmet shell 106, as is typical in conventional helmet design. The relatively hard outer shell 106 can be manufactured from conventional materials, such as fiber-resin lay-up type materials, polycarbonate plastics, polyurethane, or any other appropriate materials…."	p. 3 "The outer liner is affixed directly to the inside surface of the helmet shell as is commonplace in traditional helmet design. The traditional helmet shell may be manufactured from common materials such as fiber lay-up resin type materials, polycarbonate plastics, or other appropriate materials."
[0040] "The inner and outer liners **104** and **102** are coupled to each other so as to form an internal Subassembly by the use of a plurality of resilient, e.g., elastomeric, structures referred to herein as "isolation dampers." As illustrated in FIG. 2, the isolation dampers **108** can comprise a generally circular disk having a concave, e.g., generally spherical, recess 110 disposed in a lower Surface thereof, a correspondingly shaped convex protrusion extending from an upper Surface thereof, and a flange **112** extending around the circumfery thereof. The inner liner 104 can include a plurality of convex, e.g., generally spherical, protrusions **116**, each disposed in spaced opposition to a corresponding one of a plurality of correspondingly shaped concave recesses **114** disposed in the outer liner **102**."	p. 3 "The inner and outer liners engage each other to form an internal sub-assembly by the use of a plurality of flexible or elastomeric structures referred to herein as flex bumpers or isolation dampers. In one exemplary embodiment shown in Fig. 2, the flex bumpers are generally circular with a circular concave recess and an outer flange. The flex bumpers fit between the inner liner and the outer liner such that the concave recess nests within a recess in the outer liner. A corresponding raised section of the inner liner nests within the concave recess. In another design embodiment the flex bumpers could connect to the inside surface of the outer hard shell directly."
[0041] "In an embodiment, one or both of the concave and convex features of the isolation dampers 108 can be complementary in shape to one or both of those of the concave and convex features of the inner and outer liners 104 and 102, respectively. The isolation dampers 108 are disposed between the inner	p. 3 "The inner and outer liners engage each other to form an internal sub-assembly by the use of a plurality of flexible or elastomeric structures referred to herein as flex bumpers or isolation dampers. In one exemplary embodiment shown in Fig. 2, the flex bumpers are generally circular with a circular concave

and outer liners 104 and 102 such that their concave recesses 110 are respectively disposed over a corresponding one of the convex protrusions 116 on the inner liner 104, and the convex protrusions on the isolation dampers 108 are respectively disposed within corresponding ones of the concave recesses 114 in the outer liner 102."	recess and an outer flange. The flex bumpers fit between the inner liner and the outer liner such that the concave recess nests within a recess in the outer liner. A corresponding raised section of the inner liner nests within the concave recess. In another design embodiment the flex bumpers could connect to the inside surface of the outer hard shell directly."
[0042] "[T]he the outer liner 102 is affixed directly to the inside surface of the outer shell 106…."	pp. 2, 3 "Another layer, the outer liner, is affixed to the hard outer shell of the helmet." "The outer liner is affixed directly to the inside surface of the helmet shell as is commonplace in traditional helmet design."
[0043] "As illustrated in FIGS. **2** and **3**, plurality of the isolation dampers **108** can be provided at selected points around the circumfery of the helmets **100** or **150**. Different isolation dampers 108 can be designed for specific applications and effectively "tuned to manage the anticipated rotational and translational forces applied thereto. The isolation dampers 108 can be variously configured to control the amount of rotational force that will cause displacement of the various liners of the helmet **100** and, as discussed in more detail below, can be configured such that they will tend to cause the inner liner **104** to return to its original position relative to the outer liner **102** after the force of an impact is removed from the helmet **100** or **150**. It will be readily apparent to those skilled in the art that isolation dampers **108** can be configured in a wide range of configurations and materials varying from those shown and described in the example embodiments, and the general principles described herein can be applied without departing from the spirit and scope of the invention."	p. 3, 4 "The inner and outer liners engage each other to form an internal sub-assembly by the use of a plurality of flexible or elastomeric structures referred to herein as flex bumpers or isolation dampers. In one exemplary embodiment shown in Fig. 2, the flex bumpers are generally circular with a circular concave recess and an outer flange. The flex bumpers fit between the inner liner and the outer liner such that the concave recess nests within a recess in the outer liner. A corresponding raised section of the inner liner nests within the concave recess. In another design embodiment the flex bumpers could connect to the inside surface of the outer hard shell directly. A plurality of such flex bumpers may be provided at various points around the helmet. These flex bumpers provide the ability to control and tune the amount of rotational force that will cause displacement of the outer liner relative to the inner liner, and can be configured such that they will tend to cause the inner liner to return to its original position in reference to the outer liner after the force is removed, functioning in a fashion similar to a ball and socket detent. The flex bumpers can be arranged in various modifications to the

	embodiments as will be readily apparent to those skilled in the art, and general principles defined herein may be applied to other embodiments and applications without departing from the spirit and scope of the invention."
[0044] "In some embodiments, limits or "stops" can be designed into and between the liners to prevent over-rotation or over-displacement between the layers during an impact incident. Referring again to FIG. **2**, in one embodiment, the inner liner **104** can be provided with multiple flanges **118** extending outward from the inner liner **104** to act as rotational stops by impacting with an edge of a corresponding recess in the outer liner **102** at maximum displacement. Other embodiments can use features of the helmet's exterior shell **106**, a "comfort" liner (not illustrated), or perimeter moldings (not illustrated) to act as stops."	p. 3 "The inner liner may be static and engaged directly by the individual's head through the use of a comfort liner and or fit pads common in all sporting helmets. Proper helmet restraint is managed by the chin-strap or neck security device commonplace on all helmets." p.4 "An engineered limit (or stop) may.be designed into and between the interior liners to prevent over-rotation or displacement between the interior liners due to the displacement of the exterior helmet shell assembly during an accident. In one exemplary embodiment the inner liner is provided with multiple flanges extending outward from the inner liner to act as rotational "stops" by impacting with the edge of the outer liner."
[0045] "Such "intermediate" liners can be formed of, for example, EPS, … or any other suitable materials." "[I]solation dampers 130 of various configurations can also be disposed between, e.g., the inner and outer liners 122 and 128 and/or the intermediate liner 126 to further dissipate the energy of impacts." "[A] 'comfort' liner 123 configured to closely surround the head of the wearer can be attached or otherwise coupled to an inner surface of the inner liner 122."	pp. 2, 3, 4 "One or more intermediate layers may be disposed between the inner and outer layers. These layers may be formed of any suitable material, including without limitation such materials commonly used in the industry such as expanded polystyrene (EPS)." "The liners may be multi or single-density EPS liners or may be comprised of any other suitable materials." "In other exemplary embodiments, an additional layer is inserted between the inner liner and outer liner. This layer, like the inner and outer liners, may be formed of EPS or any other suitable materials."

	"Flex bumpers[14] of various configurations can be placed between the liners and/or the middle layer to further dissipate energy." "The liners may be multi or single-density EPS liners or may be comprised of any other suitable materials. The inner liner may be static and engaged directly by the individual's head through the use of a comfort liner and or fit pads common in all sporting helmets."
[0046] "[T]he isolation dampers 130 can be cylindrical in shape, and configured such that they engage within corresponding recesses 132 in the adjacent surfaces of the inner, intermediate and outer liners 122, 126 and 128 so as to create a space or air gap 134 between the respective opposing surfaces thereof. The isolation dampers 130 can be configured to flex, bend, and/or compress to absorb the energy of impacts to the helmet from all directions, and thereby enable the inner and intermediate liners 122 and 126 to move relative to each other and/or the outer liner 128."	p. 4 "[T]he flex bumpers may be cylindrical in shape, and sized such that they engage recesses in the adjacent surfaces of the liners and middle layer, creating a space between those adjacent surfaces. The flex bumpers can flex, bend, and compress to absorb the energy of impacts from all directions, and allow the liners to move relative to the middle layer."
[0047] "The one or more recess 140 can be configured to allow for controlled lateral or rotational displacement of the inner liner 138 such that, once the inner liner 138 moves a predetermined distance relative to the outer liner 142, as indicated by the arrow in FIG. 5, the lug 136 will abut or engage one or more of the walls of the corresponding recess 140, thereby stopping movement of the inner liner 138 relative to the outer liner 142 in that direction."	p. 4 "[L]ugs extending from the inner liner engage corresponding recesses in the middle layer, while lugs extending from the middle layer in turn engage corresponding recesses in the outer liner. These lugs and corresponding recesses can be designed to allow for a controlled amount of rotational movement between the liners and middle layer." "The engagement between the inner and outer liners allows for limited, controlled, omni-directional movement to reduce the transfer of forces and resulting acceleration originating from the hard outer shell of the helmet. The relative movement of the inner and outer

[14] Weber Provisional also uses the terms "flex bumpers" and "isolation dampers" interchangeably, as shown, for example, at. 3.. ("The inner and outer liners engage each other to form an internal sub-assembly by the use of a plurality of flexible or elastomeric structures ***referred to herein as flex bumpers or isolation dampers***.").

	layers is controlled via various means of suspension, dampening, and motion controlling components that engage the liners. Additional layers or partial layers may be inserted between the inner liner and the outer liner in such a way that would comprise various layers of components, with or without air gaps between them, that would allow for such controlled omni-directional relative displacement between one or more of the layers."
[0048] "In other embodiments, a similar system of lugs 136 and isolation dampers 130 can be implemented using only two layers or liners 138, 142, or alternatively, using three or more liners. It will be readily understood by those of skill in the art that a wide range of different configurations can be devised for the lugs 136 and isolation dampers 130 described herein. Indeed, the lugs 136 and isolation dampers 130 can take on a wide range of shapes, sizes, materials, and specific physical properties. They can also be configured to engage different layers differently than as illustrated and described herein."	p. 4 "In other exemplary embodiments, a similar system of lugs and flex bumpers can be implemented using only two layers, or using more than three layers. It will be readily understood by those of skill in the art that a wide range of potential configurations can be devised for the lugs and flex bumpers described herein. The lugs and flex bumpers may take on a wide range of shapes, sizes, materials, and specific physical properties. They may also be designed to engage different layers differently than shown herein."
[0049] "In some embodiments, the isolation dampers **130** can be configured with specific physical properties that enable them to couple an inner liner **138** with an outer layer **142** and maintain a predetermined gap therebetween, or otherwise control the spatial relationship between the two liners **138**, **142**. Where a space is maintained between different layers, the space can comprise an air gap, or can be completely or partially filled with any suitable material in any form, including without limitation, a liquid, gel, foam, or gas cushion."	p.4 "In other exemplary embodiments, an additional layer is inserted between the inner liner and outer liner. This layer, like the inner and outer liners, may be formed of EPS or any other suitable materials. In one exemplary embodiment shown in Fig. 3, lugs extending from the inner liner engage corresponding recesses in the middle layer, while lugs extending from the middle layer in turn engage corresponding recesses in the outer liner. These lugs and corresponding recesses can be designed to allow for a controlled amount of rotational movement between the liners and middle layer. Flex bumpers of various configurations can be placed between the liners and/or the middle layer to further dissipate energy. In one exemplary

	embodiment, the flex bumpers may be cylindrical in shape, and sized such that they engage recesses in the adjacent surfaces of the liners and middle layer, creating a space between those adjacent surfaces. The flex bumpers can flex, bend, and compress to absorb the energy of impacts from all directions, and allow the liners to move relative to the middle layer. In other exemplary embodiments, a similar system of lugs and flex bumpers can be implemented using only two layers, or using more than three layers. It will be readily understood by those of skill in the art that a wide range of potential configurations can be devised for the lugs and flex bumpers described herein. The lugs and flex bumpers may take on a wide range of shapes, sizes, materials, and specific physical properties. They may also be designed to engage different layers differently than shown herein."
[0050] "The isolation dampers 10 enable the inner, outer and one or more intermediate layers, if any, to move omnidirectionally relative to one another, including an inner liner 104 that is in a snug, direct contact with a wearer's head most commonly via a comfort liner."	pp. 3, 5 "The engagement between the inner and outer liners allows for limited, controlled, omni-directional movement to reduce the transfer of forces and resulting acceleration originating from the hard outer shell of the helmet. The relative movement of the inner and outer layers is controlled via various means of suspension, dampening, and motion controlling components that engage the liners." "The inner liner may be static and engaged directly by the individual's head through the use of a comfort liner and or fit pads common in all sporting helmets." "These energy absorbing flex bumpers and lugs provide and support the ability for the component internal surfaces of the various liners and layers to be displaced and rotate in any direction necessary, independently of each other in the accident event where rotational demand forces are impacted upon the exterior of the helmet."
[0051]	p. 4, 5

"As described above, in some embodiments, the isolation dampers 108 are configured so as to return the inner and outer liners 104 and 102 back to their respective initial or "neutral resting positions relative to each other, once the rotational or translational force of an impact is removed from them. Thus, the outer shell 144 and internal liners of a helmet incorporating such an arrangement will quickly and automatically re-align themselves relative to each other after an impact. In this regard, it should be understood that the dimensions, shape, positioning, alignment, and materials of the isolation dampers 130 can be varied widely to tune the helmet to the specific application at hand."	"Furthermore, by using different materials and configurations, it is possible to adjust or tune the protection provided by helmets that use this concept. The liners and any other layers can be formed from materials with distinct flex, compression, and crush characteristics, and the flex bumpers can be formed from various types of elastomers or other appropriate energy absorbing materials such as micro-cellular urethane. Thus, by tuning the density and stiffness of the flex bumpers, helmets can be designed to strategically manage impact energy based on the known range of common head weights expected to be present in any given helmet, by helmet size. For instance, the 12 year old youth has a smaller head and head weight than the 35 year old 200 lbs mature male. These energy absorbing flex bumpers and lugs provide and support the ability for the component internal surfaces of the various liners and layers to be displaced and rotate in any direction necessary, independently of each other in the accident event where rotational demand forces are impacted upon the exterior of the helmet."
[0056] "[T]he method by which the isolation damper 200 is constrained and allowed to deform, or prevented from deforming, is another design technique that can be used to control the dynamic interactions of an impact force acting on a helmet and how it is transferred from one liner to another liner." "[T]he dynamic movement characteristics of the isolation dampers 200 can be managed to control and modify the ability of the outer liner 204 to move in a desired fashion in both compression and shear directions relative to the inner layer 202."	pp. 2, 4 "The liners and any other layers can be formed from materials with distinct flex, compression, and crush characteristics, and the flex bumpers can be formed from various types of elastomers or other appropriate energy absorbing materials such as micro-cellular urethane. Thus, by tuning the density and stiffness of the flex bumpers, helmets can be designed to strategically manage impact energy…." "[T]he omni-directional energy management system will allow for significant rotational shearing and omni-directional displacement to absorb energy from all force vectors."
[0062] "[T]he isolation dampers 200 can be formed of a wide variety of elastomeric materials,	p. 4 "[T]he flex bumpers can be formed from various types of elastomers or other

including MCU (micro-cellular urethane), …."	appropriate energy absorbing materials such as micro-cellular urethane."
[0063] "The specific thicknesses of the various liners and gaps, if any, between them can be varied widely depending on the particular application of the helmet. The geometries and relative arrangement of the various liners and any gaps between them can also be varied to manage the characteristics of the helmet in response to impacts from a range of different directions and magnitudes. For example, in one specific example embodiment, inner and outer EPS liners with respective thicknesses of about twenty (20) millimeters and twelve (12) millimeters can be used with an air gap of about six (6) millimeter between them."	p. 4 "Furthermore, by using different materials and configurations, it is possible to adjust or tune the protection provided by helmets that use this concept. The liners and any other layers can be formed from materials with distinct flex, compression, and crush characteristics, and the flex bumpers can be formed from various types of elastomers or other appropriate energy absorbing materials such as micro-cellular urethane."

Weber's provisional also provides written description support for at least 1 claim of Weber. The chart below provides a summary of the written description support in the provisional for claim 1 of Weber.

Weber	Weber Provisional
1. A helmet, comprising:	p. 2 "Another layer, the outer liner, is affixed to the hard outer shell of the helmet."
an outer shell;	
an outer liner disposed within and coupled to the outer shell; and	
an inner liner disposed within and coupled to the outer liner with at least one isolation damper for omnidirectional movement of the inner liner relative to the outer liner and the outer shell.	pp. 2, 3, 5 "The inner and outer liners engage each other to form an internal sub-assembly by the use of a plurality of flexible or elastomeric structures referred to herein as flex bumpers or isolation dampers." "[T]he outer surface of the inner liner is connected to the inner surface of the outer liner with components that will allow for controlled omnidirectional relative displacement between the liners. Thus, the two liners are engaged with each other such that they can displace relative to each other in response to angular forces from a glancing

	indirect or direct blow to the hard outer shell of the helmet."

b) Halldin-II

Halldin-II is prior art to all of the asserted claims in the asserted patents. The Halldin-II provisional application 61/333,817 ("Halldin-II Provisional") [RVST00001986-RVST00002013] provides written description support for the portions of Halldin-II's disclosures relied upon in these Invalidity Contentions, as shown below.

Halldin-II	Halldin-II Provisional
Fig. 2 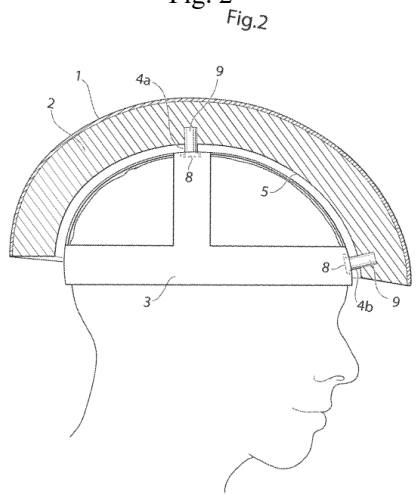 	Fig. 2 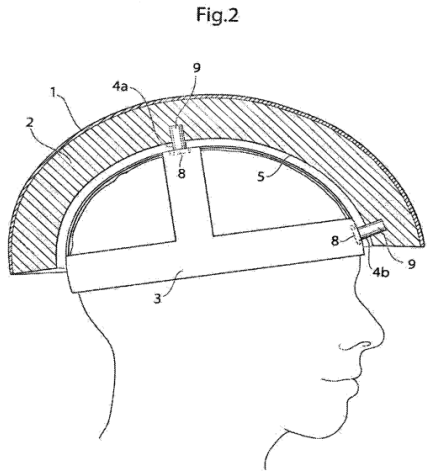
Fig. 3 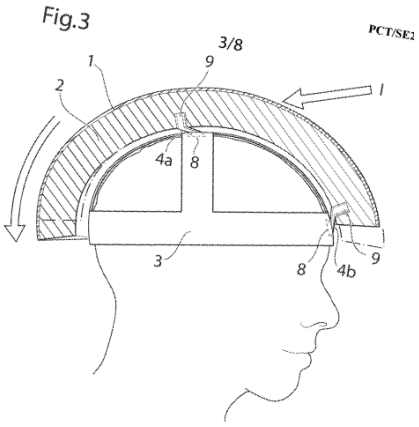 	Fig. 3 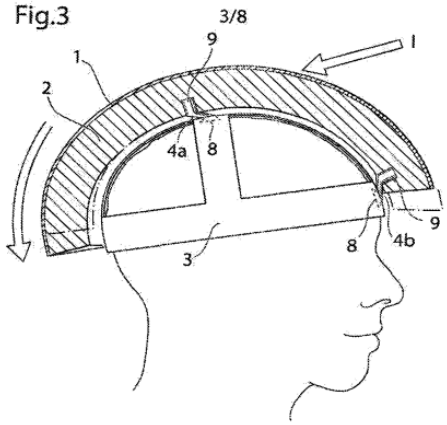

Fig. 4 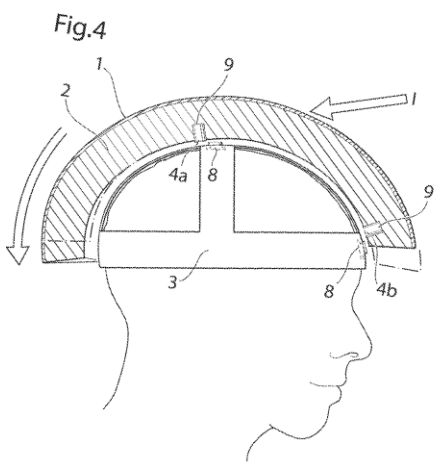 	Fig. 4 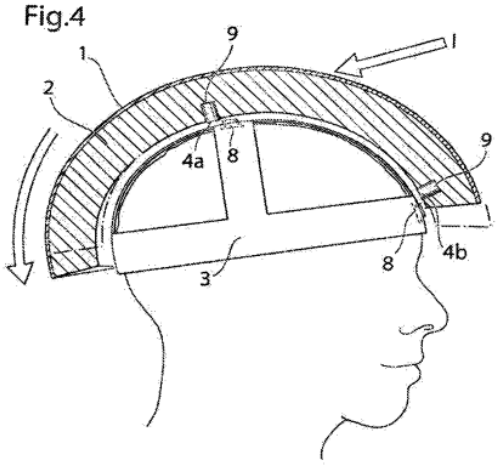
Fig. 11 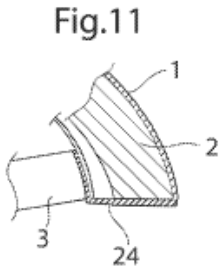 	Fig. 11 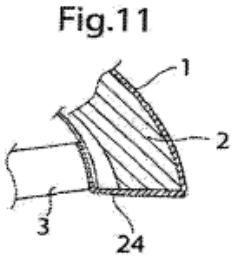
Fig. 13 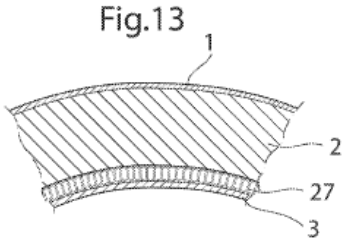 	Fig. 13 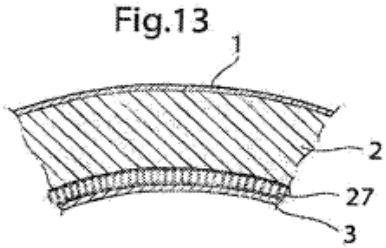
Fig. 15	Fig. 15

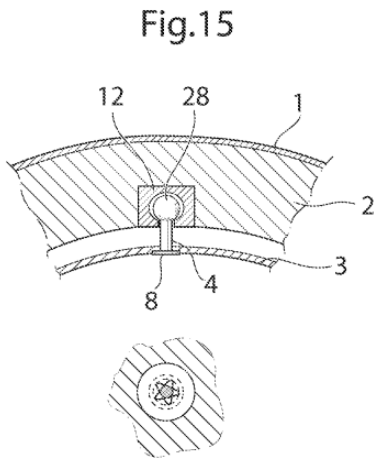	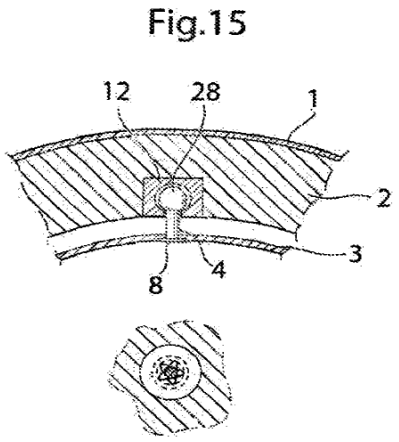
Title "Helmet with sliding facilitator arranged at energy absorbing layer"	[0001] "The present invention relates generally to a helmet comprising an energy absorbing layer, with or without any outer shell, and a sliding facilitator being provided inside of the energy absorbing layer."
[0001] "The present invention relates generally to a helmet comprising an energy absorbing layer, with or without any outer shell, and a sliding facilitator being provided inside of the energy absorbing layer."	[0001] "The present invention relates generally to a helmet comprising an energy absorbing layer, with or without any outer shell, and a sliding facilitator being provided inside of the energy absorbing layer."
[0005] "The most common type of impact is oblique impact that is a combination of a radial and a tangential force acting at the same time to the head, causing for example concussion of the brain. The oblique impact results in both translational acceleration and rotational acceleration of the brain. Rotational acceleration causes the brain to rotate within the skull creating injuries on bodily elements connecting the brain to the skull and also to the brain itself."	[0005] "The most common type of impact is oblique impact that is a combination of a radial and a tangential force acting at the same time to the head. The oblique impact results in both translational acceleration and rotational acceleration of the brain. Rotational acceleration causes the brain to rotate within the skull creating injuries on bodily elements connecting the brain to the skull and also to the brain itself."
[0012] "Preferably an outer shell is provided outside of the energy absorbing layer. A	[0011] "Preferably an outer shell is provided outside of the energy absorbing layer. A helmet designed

helmet designed accordingly could be manufactured using in-mould technology, although it is possible to use the disclosed idea in helmets of all types, for example helmets of hard shell type such as motorcycle helmets."	accordingly could be manufactured using in-mould technology, although it is possible to use the disclosed idea in helmets of all types."
[0013] "According to yet another embodiment the attachment device is fixated to the energy absorbing layer and/ or the outer shell by means of at least one fixation member, which could be adapted to absorb energy and forces by deforming in an elastic, semi-elastic or plastic way. During an impact, the energy absorbing layer acts as an impact absorber by compressing the energy absorbing layer and if an outer shell is used, it will spread out the impact energy over the shell. The sliding facilitator will allow sliding between the attachment device and the energy absorbing layer allowing for a controlled way to absorb the rotational energy otherwise transmitted to the brain. The rotational energy can be absorbed by friction heat, energy absorbing layer deformation or, deformation or displacement of the at least one fixation member. The absorbed rotational energy will reduce the amount of rotational acceleration affecting the brain, thus reducing the rotation of the brain within the skull."	[0012] "According to yet another embodiment the attachment device is fixated to the energy absorbing layer and/ or the outer shell by means of at least one fixation member, which could be adapted to absorb energy and forces by deforming in an elastic, semi-elastic or plastic way. During an impact, the energy absorbing layer acts as an impact absorber by compressing the energy absorbing layer and if an outer shell is used, it will spread out the impact energy over the shell. The sliding facilitator will allow sliding between the attachment device and the energy absorbing layer allowing for a controlled way to absorb the rotational energy otherwise transmitted to the brain. The rotational energy can be absorbed by friction heat, energy absorbing layer deformation or, deformation or displacement of the at least one fixation member. The absorbed rotational energy will reduce the amount of rotational acceleration affecting the brain, thus reducing the rotation of the brain within the skull."
[0039] "One embodiment of a protective helmet comprises an energy absorbing layer, and a sliding facilitator being provided inside of the energy absorbing layer. According to one embodiment an in-mold helmet suitable for bicycling is provided. The helmet comprises an outer preferably thin, rigid shell made of a polymer material such as polycarbonate, ABS, PVC, glassfiber, Aramid, Twaron, carbonfibre or Kevlar. It is also	[0037] "One embodiment of a protective helmet comprises an energy absorbing layer, and a sliding facilitator being provided inside of the energy absorbing layer. According to one embodiment an in-mold helmet suitable for bicycling is provided. The helmet comprises an outer preferably thin, rigid shell made of a polymer material such as polycarbonate, ABS, PVC, glassfiber, Aramid, Twaron, carbonfibre or Kevlar. It is also conceivable to leave out the outer shell. On the inside of the shell an energy absorbing layer is

conceivable to leave out the outer shell. On the inside of the shell an energy absorbing layer is provided which could be a polymer foam material such as EPS (expanded poly styrene), EPP (expanded polypropylene), EPU (expanded polyurethane) or other structures like honeycomb for example. A sliding facilitator is provided inside of the energy absorbing layer and is adapted to slide against the energy absorbing layer or against an attachment device which is provided for attaching the helmet to a wearer's head. The attachment device is fixated to the energy absorbing layer and/or the shell by means of fixation members adapted to absorb impact energy and forces."	provided which could be a polymer foam material such as EPS (expanded poly styrene), EPP (expanded polypropylene), EPU (expanded polyurethane) or other structures like honeycomb for example. A sliding facilitator is provided inside of the energy absorbing layer and is adapted to slide against the energy absorbing layer or against an attachment device which is provided for attaching the helmet to a wearer's head. The attachment device is fixated to the energy absorbing layer and/or the shell by means of fixation members adapted to absorb impact energy and forces."
[0042] "Fig. 1 shows a helmet according to one embodiment in which the helmet comprises an energy absorbing layer 2. The outer surface 1 of the energy absorbing layer 2 may be provided from the same material as the energy absorbing layer 2 or it is also conceivable that the outer surface 1 could be a rigid shell 1 made from a different material than the energy absorbing layer 2. A sliding facilitator 5 is provided inside of the energy absorbing layer 2 in relation to an attachment device 3 provided for attachment of the helmet to a wearer's head. According to the embodiment shown in fig. 1 the sliding facilitator 5 is fixated to or integrated in the energy absorbing layer 2, however it is equally conceivable that the sliding facilitator 5 is provided on or integrated with the attachment device 3, for the same purpose of providing slidability between the energy absorbing layer 2 and the attachment device 3. The helmet of fig. 1	[0040] "Fig. 1 shows a helmet according to one embodiment in which the helmet comprises an energy absorbing layer 2. The outer surface 1 of the energy absorbing layer 2 may be provided from the same material as the energy absorbing layer 2 or it is also conceivable that the outer surface 1 could be a rigid shell 1 made from a different material than the energy absorbing layer 2. A sliding facilitator 5 is provided inside of the energy absorbing layer 2 in relation to an attachment device 3 provided for attachment of the helmet to a wearer's head. According to the embodiment shown in fig. 1 the sliding facilitator 5 is fixated to or integrated in the energy absorbing layer 2, however it is equally conceivable that the sliding facilitator 5 is provided on or integrated with the attachment device 3, for the same purpose of providing slidability between the energy absorbing layer 2 and the attachment device 3. The helmet of fig. 1 has a plurality of vents 17 allowing airflow through the helmet."

has a plurality of vents 17 allowing airflow through the helmet."	
[0043] "The attachment device 3 is fixated to the energy absorbing layer 2 and/ or the outer shell 1 by means of four fixation members 4a, 4b, 4c and 4d adapted to absorb energy by deforming in an elastic, semi-elastic or plastic way. Energy could also be absorbed through friction creating heat and/ or deformation of the attachment device, or any other part of the helmet. According to the embodiment shown in fig. 1 the four fixation members 4a, 4b, 4c and 4d are suspension members 4a, 4b, 4c, 4d, having first and second portions 8, 9, wherein the first portions 8 of the suspension members 4a, 4b, 4c, 4d are adapted to be fixated to the attachment device 3, and the second portions 9 of the suspension members 4a, 4b, 4c, 4d are adapted to be fixated to the energy absorbing layer 2."	[0041] "The attachment device 3 is fixated to the energy absorbing layer 2 and/or the outer shell 1 by means of four fixation members 4a, 4b, 4c and 4d adapted to absorb energy by deforming in an elastic, semi-elastic or plastic way. Energy could also be absorbed through friction creating heat and/or deformation of the attachment device, or any other part of the helmet. According to the embodiment shown in fig. 1 the four fixation members. 4a, 4b, 4c and 4d are suspension members 4a, 4b, 4c, 4d, having first and second portions 8, 9, wherein the first portions 8 of the suspension members 4a, 4b, 4c. 4d are adapted to be fixated to the attachment device 3, and the second portions 9 of the suspension members 4в, 4b, 4c, 4d are adapted to be fixated to the energy absorbing layer 2. The sliding facilitator 5 may be a low friction material, which in the embodiment shown is provided on outside of the attachment device 3 facing the energy absorbing layer 2, however, in other embodiments, it is equally conceivable that the sliding facilitator 5 is provided on the inside of the energy absorbing layer 2. The low friction material could be a waxy polymer, such as PTFE, PFA, FEP, PE and UHMWPE, or a powder material which could be infused with a lubricant. This low friction material could be applied to either one, or both of the sliding facilitator and the energy absorbing layer, in some embodiments the energy absorbing layer self is adapted to act as sliding facilitator and may comprise a low friction material. The attachment device could be made of an elastic or semi-elastic polymer material, such as PC, ABS, PVC or PTFE, or a natural fiber material such as cotton cloth. Fig. 1 further discloses an adjustment device 6 for adjusting the diameter of the head band for the particular wearer. In other embodiments the head band could be an elastic head band in which case the adjustment device 6 could be excluded."
[0044] "The sliding facilitator 5 may be a low friction material, which in the	[0041] "The sliding facilitator 5 may be a low friction material, which in the embodiment shown is

embodiment shown is provided on outside of the attachment device 3 facing the energy absorbing layer 2, however, in other embodiments, it is equally conceivable that the sliding facilitator 5 is provided on the inside of the energy absorbing layer 2. The low friction material could be a waxy polymer, such as PTFE, PFA, FEP, PE and UHMW PE, or a powder material which could be infused with a lubricant. This low friction material could be applied to either one, or both of the sliding facilitator and the energy absorbing layer, in some embodiments the energy absorbing layer itself is adapted to act as sliding facilitator and may comprise a low friction material."	provided on outside of the attachment device 3 facing the energy absorbing layer 2, however, in other embodiments, it is equally conceivable that the sliding facilitator 5 is provided on the inside of the energy absorbing layer 2. The low friction material could be a waxy polymer, such as PTFE, PFA, FEP, PE and UHMWPE, or a powder material which could be infused with a lubricant. This low friction material could be applied to either one, or both of the sliding facilitator and the energy absorbing layer, in some embodiments the energy absorbing layer itself is adapted to act as sliding facilitator and may comprise a low friction material."
[0046] "Fig. 2 shows an embodiment of a helmet similar to the helmet in fig.1, when placed on a wearers head. However, in fig. 2 the attachment device 3 is fixated to the energy absorbing layer by means of only two fixation members 4a, b, adapted to absorb energy and forces elastically, semi-elastically or plastically. The embodiment of fig. 2 comprises a hard outer shell 1 made from a different material than the energy absorbing layer 2."	[0042] "Fig. 2 shows an embodiment of a helmet similar to the helmet in fig.1, when placed on a wearers head. However, in fig. 2 the attachment device 3 is fixated to the energy absorbing layer by means of only two fixation members 4a, b, adapted to absorb energy and forces elastically, semi-elastically or plastically. The embodiment of fig. 2 comprises a hard outer shell 1 made from a different material than the energy absorbing layer 2."
[0047] "Fig. 3 shows the helmet according to the embodiment of fig. 2 when receiving a frontal oblique impact I creating a rotational force to the helmet causing the energy absorbing layer 2 to slide in relation to the attachment device 3. The attachment device 3 is fixated to the energy absorbing layer 2 by means of the fixation members 4a, 4b. The fixation absorbs the rotational forces by deforming elastically or semi-elastically."	[0043] "Fig. 3 shows the helmet according to the embodiment of fig. 2 when receiving a frontal oblique impact I creating a rotational force to the helmet causing the energy absorbing layer 2 to slide in relation to the attachment device 3. The attachment device 3 is fixated to the energy absorbing layer 2 by means of the fixation members 4a, 4b. The fixation absorbs the rotational forces by deforming elastically or semi-elastically."
[0048] "Fig. 4 shows the helmet according to the embodiment of fig. 2	[0044] "Fig. 4 shows the helmet according to the embodiment of fig. 2 when receiving a frontal

when receiving a frontal oblique impact I creating a rotational force to the helmet causing the energy absorbing layer 2 to slide in relation to the attachment device 3. The attachment device 3 is fixated to the energy absorbing layer by means of rupturing fixation members 4a, 4b which absorbs the rotational energy by deforming plastically and thus needs to be replaced after impact. A combination of the embodiments of fig. 3 and fig. 4 is highly conceivable, i.e. a portion of the fixation members ruptures, absorbing energy plastically, while another portion of the fixation members deforms and absorbs forces elastically. In combinational embodiments it is conceivable that only the plastically deforming portion needs to be replaced after impact."	oblique impact I creating a rotational force to the helmet causing the energy absorbing layer 2 to slide in relation to the attachment device 3. The attachment device 3 is fixated to the energy absorbing layer by means of rupturing fixation members 4a, 4b which absorbs the rotational energy by deforming plastically and thus needs to be replaced after impact. A combination of the embodiments of fig. 3 and fig. 4 is highly conceivable, i.e. a portion of the fixation members ruptures, absorbing energy plastically, while another portion of the fixation members deforms and absorbs forces elastically. In combinational embodiments it is conceivable that only the plastically deforming portion needs to be replaced after impact."
[0050] "Fig. 5 further shows four fixation members 4a, 4b, 4c, 4d, fixated to the attachment device 3. In other embodiments the attachment device 3 could be only a head band 3a, or en entire cap adapted to entirely cover the upper portion of the wearer's head or any other design functioning as an attachment device for mounting on a wearer's head."	[0046] "Fig. 5 further shows four fixation members 4a, 4b, 4c, 4d, fixated to the attachment device 3. In other embodiments the attachment device 3 could be only a head band 3a, or en entire cap adapted to entirely cover the upper portion of the wearer's head or any other design functioning as an attachment device for mounting on a wearer's head."
[0052] "Fig. 6 shows an alternative embodiment of a fixation member 4 in which the first portion 8 of the fixation member 4 is fixated to the attachment device 3, and the second portion 9 of the fixation device 4 is fixated to the energy absorbing layer 2 by means of an adhesive. The fixation member 4 is adapted to absorb impact energy and forces by deforming in an elastic, semi-elastic or plastic way."	[0048] "Fig. 6 shows an alternative embodiment of a fixation member 4 in which the first portion 8 of the fixation member 4 is fixated to the attachment device 3, and the second portion 9 of the fixation device 4 is fixated to the energy absorbing layer 2 by means of an adhesive. The fixation member 4 is adapted to absorb impact energy and forces by deforming in an elastic, semi-elastic or plastic way."
[0055]	[0051]

"Fig. 9 shows a fixation member 4 in a sectional view and an A-A view. The attachment device 3 is according to this embodiment attached to the energy absorbing layer 2 by means of the fixation member 4 having a second portion 9 placed in a female part 12 adapted for elastic, semi-elastic or plastic deformation, and a first part 8 connected to the attachment device 3. The female part 12 comprises flanges 13 adapted to flex or deform elastically, semi-elastically or plastically when placed under a large enough strain by the fixation member 4 so that the second portion 9 may leave the female part 12."	"Fig. 9 shows a fixation member 4 in a sectional view and an A-A view. The attachment device 3 is according to this embodiment attached to the energy absorbing layer 2 by means of the fixation member 4 having a second portion 9 placed in a female part 12 adapted for elastic, semi-elastic or plastic deformation, and a first part 8 connected to the attachment device 3. The female part 12 comprises flanges 13 adapted to flex or deform elastically, semi-elastically or plastically when placed under a large enough strain by the fixation member 4 so that the second portion 9 may leave the female part 12."
[0057] "Fig. 11 shows an embodiment in which the attachment device 3 is fixated to the energy absorbing layer 2 at the periphery thereof by means of a membrane or sealing foam 24, which could be elastic or adapted for plastic deformation."	[0053] "Fig. 11 shows an embodiment in which the attachment device 3 is fixated to the energy absorbing layer 2 at the periphery thereof by means of a membrane or sealing foam 24, which could be elastic or adapted for plastic deformation."
[0059] "Fig. 13 shows an embodiment in which the fixating member is an interconnecting sandwich layer 27, such as a sandwich cloth, which could comprise elastically, semi-elastically or plastically deformable fibers connecting the attachment device 3 to the energy absorbing layer 2 and being adapted to shear when shearing forces are applied and thus absorb rotational energy or forces."	[0055] "Fig. 13 shows an embodiment in which the fixating member is an interconnecting sandwich layer 27, such as a sandwich cloth, which could comprise elastically, semi-elastically or plastically deformable fibers connecting the attachment device 3 to the energy absorbing layer 2 and being adapted to shear when shearing forces are applied and thus absorb rotational energy or forces."
[0061] "Fig. 15 shows an embodiment in which the fixating member is re-attachable by means of an elastic male part 28 and/ or an elastic female part 12 being detachably connected (so called snap fixation) such that the male part 28 is	[0057] "Fig. 15 shows an embodiment in which the fixating member is re-attachable by means of an elastic male part 28 and/ or an elastic female part 12 being detachably connected (so called snap fixation) such that the male part 28 is detached from the female 12 part when a large enough strain

detached from the female 12 part when a large enough strain is placed on the helmet, in the occurrence of an impact, and the male part 28 can be re-inserted into the female 12 part to regain the functionality. It is also conceivable to snap fixate the fixating member without it being detachable at large enough strain and without being re-attachable."	is placed on the helmet, in the occurrence of an impact, and the male part 28 can be re-inserted into the female 12 part to regain the functionality."
[0062] "In the embodiments disclosed herein the distance between the energy absorbing layer and the attachment device could vary from being practically nothing to being a substantial distance without parting from the concept of the invention."	[0058] "In the embodiments disclosed herein the distance between the energy absorbing layer and the attachment device could vary from being practically nothing to being a substantial distance without parting from the concept of the invention."
[0064] "In embodiments comprising several fixation members it is further more conceivable that one of the fixation members is a master fixation member adapted to deform plastically when placed under a large enough strain, whereas the additional fixation members are adapted for purely elastic deformation."	[0060] "In embodiments comprising several fixation members it is further more conceivable that one of the fixation members is a master fixation member adapted to deform plastically when placed under a large enough strain, whereas the additional fixation members are adapted for purely elastic deformation."
[0065] "Fig. 16 is a table derived from a test performed with a helmet according having a sliding facilitator (MIPS), in relation to an ordinary helmet (Orginal) without a sliding layer between the attachment device and the energy absorbing layer. The test is performed with a free falling instrumented dummy head which impacts a horizontally moving steel plate. The oblique impact results in a combination of translational and rotational acceleration that is more realistic than common test methods, where helmets are dropped in pure vertical impact to the horizontal impact surface. Speeds of up to 10 m/s (36 km/h) can be achieved both in horizontal	[0060] "Fig. 16 is a table derived from a test performed with a helmet according having a sliding facilitator (MIPS), in relation to an ordinary helmet (Orginal) without a sliding layer between the attachment device and the energy absorbing layer. The test is performed with a free falling instrumented dummy head which impacts a horizontally moving steel plate. The oblique impact results in a combination of translational and rotational acceleration that is more realistic than common test methods, where helmets are dropped in pure vertical impact to the horizontal impact surface. Speeds of up to 10 m/s (36 km/h) can be achieved both in horizontal and vertical direction. In the dummy head there is a system of nine accelerometers mounted to measure the translational accelerations and rotational accelerations around all axes. In the current test the

and vertical direction. In the dummy head there is a system of nine accelerometers mounted to measure the translational accelerations and rotational accelerations around all axes. In the current test the helmets are dropped from 0.7 meter. This results in a vertical speed of 3.7 m/s. The horizontal speed was chosen to 6.7 m/s, resulting in an impact speed of 7.7 m/s (27.7 km/h) and an impact angle of 29 degrees."	helmets are dropped from 0.7 meter. This results in a vertical speed of 3.7 m/s. The horizontal speed was chosen to 6.7 m/s, resulting in an impact speed of 7.7 m/s (27.7 km/h) and an impact angle of 29 degrees."
[0066] "The test discloses a reduction in translational acceleration transmitted to the head, and a large reduction in rotational acceleration transmitted to the head, and in the rotational velocity of the head."	[0061] "The test discloses a reduction in translational acceleration transmitted to the head, and a large reduction in rotational acceleration transmitted to the head, and in the rotational velocity of the head."
[0069] "Please note that any embodiment or part of embodiment as well as any method or part of method could be combined in any way. All examples herein should be seen as part of the general description and therefore possible to combine in any way in general terms."	[0064] "Please note that any embodiment or part of embodiment as well as any method or part of method could be combined in any way. All examples herein should be seen as part of the general description and therefore possible to combine in any way in general terms."

Halldin-II's provisional also provides written description support for at least 1 claim of Halldin-II. The chart below provides a summary of the written description support in the provisional for claim 7 of Halldin-II.

Halldin	Halldin Provisional
7. A method of manufacturing a helmet comprising a sliding facilitator, the method comprising the steps of:	Claim 9 "A method of manufacturing a helmet comprising a sliding facilitator, the method comprising the steps of:" [0008], [0011], [0014] "A method of manufacturing a helmet comprising a sliding facilitator is further provided." [0041]

	"The sliding facilitator 5 . . . ."
providing an energy absorbing layer in a mould, and	Claim 9 "providing an energy absorbing layer in a mould, and" [0008] "Modern bicycle helmets are usually of the type in-mould shell . . . ." [0011] "Preferably an outer shell is provided outside of the energy absorbing layer. A helmet designed accordingly could be manufactured using in-mould technology[] . . . ." [0014] "A method of manufacturing a helmet comprising a sliding facilitator is further provided. The method comprising the steps of: providing a mould, providing an energy absorbing layer in the mould[] . . . ." [0041]
providing a sliding facilitator in relation to the energy absorbing layer.	Claim 9 "providing a sliding facilitator in relation to the energy absorbing layer." [0008] [0011] [0014] "A method of manufacturing a helmet comprising a sliding facilitator is further provided. The method comprising the steps of: providing a mould, providing an energy absorbing layer in the mould, and providing a sliding facilitator contacting the energy absorbing layer." [0041] "[T]he sliding facilitator 5 . . . ."

B. Disclosure of Invalidity Due to Anticipation

The asserted claims identified below are invalid under one or more sections of 35 U.S.C. § 102 as anticipated by one or more of the prior art references set forth in Section VI.A. or listed on the face of the Patents-In-Suit, because each reference discloses, expressly or inherently, each and every element of the claims as they are arranged in the claims. Claim charts illustrating the

anticipation of asserted claims by certain references are attached as set forth in Exhibits A through E and as set forth in the charts below. The cited portions of the prior art references identified in the charts are exemplary and not exhaustive. They are representative of the prior art reference's content and should not be construed as the sole anticipatory disclosure found in the reference. Revelyst reserves the right to supplement with additional art and add anticipation arguments for additional asserted claims or claim construction positions advanced by Plaintiffs in accordance with the applicable law. The charts identify where each element of each asserted claim can be found in each item of prior art at least under Plaintiff's apparent claim interpretations and/or infringement theories. In particular:

Patent	Anticipation: Claim, Basis, References
'319 patent	• Claims 6-9, 11, and 17-19 are anticipated by Weber • Claims 6-11 and 17-20 are anticipated by Von Holst • Claims 6-11 and 17-20 are anticipated by Halldin-I • Claims 6-8, 11, and 17-18 are anticipated by Kleiven • Claims 6-8, 11, and 17-18 are anticipated by Hawkins[15] • Claims 6-9, 11, and 17-19 are anticipated by the Schutt Ion 4D Helmet • Claims 6-9, 11, and 17-19 are anticipated by the Schutt DNA Pro Plus • Claims 6-11, and 17-20 are anticipated by the TSG Kraken • Claims 6-11, and 17-20 are anticipated by the Burton RED Hi-Fi Helmet
'561 patent	• Claims 1, 7-10, and 16-19 are anticipated by Weber • Claims 1, 7-10, and 16-20 are anticipated by Von Holst • Claims 1, 7-8, and 18 are anticipated by Kleiven • Claims 1, 7-8, and 18 are anticipated by Hawkins • Claims 10, 16, and 17 are anticipated by Ferrara 2006 • Claims 10, 16, and 17 are anticipated by Piper • Claims 1, 7 and 8 are anticipated by Larry • Claims 10, 16 and 17 are anticipated by Nichols • Claims 1, 7-10, 16-17 are anticipated by Ferrara 2007 • Claims 10, 16, and 17 are anticipated by Madey • Claims 10, 16, and 17 are anticipated by Puchalski • Claims 1, 7-10, and 16-19 are anticipated by the Schutt Ion 4D Helmet

[15] Hawkins is cited through the contentions as providing general background on helmets, anticipating, and rendering the asserted claims obvious. Hawkins 2007 has the same disclosure as Hawkins. Therefore, any citations in the Invalidity Contentions and accompanying claim chart exhibits to Hawkins is also a citation to Hawkins 2007. Further, the disclosure in Hawkins 2007 is identified in separate claim charts in Exhibits A-F.

Patent	Anticipation: Claim, Basis, References
	• Claims 1, 7-10, and 16-19 are anticipated by the Schutt DNA Pro Plus • Claims 1, 7-10, and 16-20 are anticipated by the TSG Kraken • Claims 1, 7-10, and 16-20 are anticipated by the Burton RED Hi-Fi Helmet
’536 patent	• Claims 1, 7-10, and 16-19 are anticipated by Weber • Claims 1, 7-10, and 16-20 are anticipated by Von Holst • Claims 1, 7-8, and 18 are anticipated by Kleiven • Claims 1, 7-8, and 18 are anticipated by Hawkins • Claims 10, 16, and 17 are anticipated by Ferrara 2006 • Claims 10, 16, and 17 are anticipated by Piper • Claims 1, 7, 8 and 18 are anticipated by Larry • Claims 1, 7-10, 16-19 are anticipated by Ferrara 2007 • Claims 10, 16 and 17 are anticipated by Nichols • Claims 10, 16, and 17 are anticipated by Madey • Claims 10, 16, and 17 is anticipated by Puchalski • Claims 10, 16, and 17 are anticipated by the Back on Track EQ2 Helmet • Claims 10, 16, and 17 are anticipated by the Xenith X1 Helmet • Claims 1, 7-10, 16-19 are anticipated by the Schutt Ion 4D Helmet • Claims 1, 7-10, 16-19 are anticipated by the Schutt Ion DNA Pro Plus • Claims 10, 16, and 17 are anticipated by the POC Trabec Race • Claims 10, 16, and 17 are anticipated by the POC Receptor Backcountry MIPS Helmet • Claims 10, 16, and 17 are anticipated by the POC Cortex DH • Claims 1, 7-10, 16-20 are anticipated by the TSG Kraken • Claims 10, 16, and 17 are anticipated by the Lazer P-Nut MIPS Helmet • Claims 1, 7-10, 16-20 are anticipated by the Burton RED HiFi Helmet
’635 patent	• Claims 1-3, 9-11, and 17-19 are anticipated by Dotsuko • Claims 1-3, 8-11, and 17-19 are anticipated by Madey • Claims 1-3, 8-11, and 17-19 are anticipated by Puchalski • Claims 1-3, 8- 12, and 17-19 are anticipated by the Back on Track EQ2 Helmet • Claims 1-3, 8-12, and 17-19 are anticipated by the Xenith X1 Helmet • Claims 1-3, 8-12, and 17-19 are anticipated by the POC Trabec Race • Claims 1-3, 8-12, and 17-19 are anticipated by the TSG Kraken • Claims 1-3, 8-12, and 17-19 are anticipated by the Lazer P-Nut MIPS Helmet • Claims 1-3, 8-12, and 17-19 are anticipated by the Burton RED HiFi Helmet
’909 patent	• Claims 1-2, 8-9. 12-13, 19, and 20 are anticipated by Madey • Claims 1-2, 8, 9, 12-13, 19 and 20 are anticipated by Puchalski. • Claims 1-2, 5, 8-9, 11-13, 16, 19, and 20 are anticipated by the Back on Track EQ2 Helmet

Patent	Anticipation: Claim, Basis, References
	• Claims 1-2, 9, 12-13, and 20 are anticipated by the POC Trabec Race • Claims 1-2, 9, 12-13, and 20 are anticipated by the TSG Kraken • Claims 1-2, 9, 12-13, and 20 are anticipated by the Lazer P-Nut MIPS Helmet • Claims 1-2, 9, 12-13, and 20 are anticipated by the Burton RED HiFi Helmet

C. Disclosure of Invalidity Due to Obviousness

Each of asserted claims in the Patents-In-Suit is invalid under 35 U.S.C. § 103 because it would have been obvious to one of ordinary skill in the art at the time of the invention in light of one or more prior art references and the understanding of one of ordinary skill in the art. Individual claim charts that identify where each element of each asserted claim can be found in each item of prior art are attached hereto. A chart identifying these claim charts is provided below:

	'319 patent	'561 patent	'536 patent	'635 patent	'909 patent
Weber	A-1	B-1	C-1	D-1	E-1
Von Holst	A-2	B-2	C-2	D-2	E-2
Kleiven	A-3	B-3	C-3	D-3	E-3
Halldin I	A-4	B-4	C-4	D-4	E-4
Halldin II	A-5	B-5	C-5	D-5	E-5
Ferrara 2007	A-6	B-6	C-6	D-6	E-6
Puchalski	A-7	B-7	C-7	D-7	E-7
Hawkins	A-8	B-8	C-8	D-8	E-8
Piper	A-9	B-9	C-9	D-9	E-9
Copeland	A-10	B-10	C-10	D-10	E-10

	’319 patent	’561 patent	’536 patent	’635 patent	’909 patent
Madey	A-11	B-11	C-11	D-11	E-11
Dotsuko	A-12	B-12	C-12	D-12	E-12
Larry	N/A	B-13	C-13	N/A	N/A
Ferrara 2006	A-14	B-14	C-14	D-14	E-14
Nichols	A-15	B-15	C-15	D-15	E-15
POC Receptor Backcountry MIPS Helmet	A-16	B-16	C-16	D-16	E-16
POC Cortex DH Helmet	A-17	B-17	C-17	D-17	E-17
POC Trabec Race Helmet	A-18	B-18	C-18	D-18	E-18
Xenith X1 Helmet	A-19	B-19	C-19	D-19	E-19
Schutt DNA Pro Plus Helmet	A-20	B-20	C-20	D-20	E-20
Schutt ION 4D Helmet	A-21	B-21	C-21	D-21	E-21
TSG Kraken Helmet	A-22	B-22	C-22	D-22	E-22
Back on Track EQ2 Helmet	A-23	B-23	C-23	D-23	E-23

	’319 patent	’561 patent	’536 patent	’635 patent	’909 patent
Burton RED Hi-Fi Helmet	A-24	B-24	C-24	D-24	E-24
Lazer PNut MIPS Helmet	A-25	B-25	C-25	D-25	E-25
Lazer Superskin	A-26	B-26	C-26	D-26	E-26
Halldin III	A-27	B-27	C-27	D-27	E-27
Erb	N/A	N/A	N/A	N/A	E-28
Knight	N/A	N/A	N/A	D-29	E-29
Hawkins 2007	A-30	B-30	C-30	D-30	E-30

1. <u>The Prior Art Listed in Sections VI.C.2, VI.C.3, VI.C.4, VI.C.5, and VI.C.6 is Analogous Art</u>

Each reference listed below in Sections VI.C.2, VI.C.3, VI.C.4, VI.C.5, and VI.C.6 is analogous to the asserted claims of the Patents-In-Suit because the prior art is in the same field as the asserted claims of the Patents-In-Suit and is reasonably pertinent to solving the problems allegedly addressed by the asserted claims of the Patents-In-Suit—reducing rotational acceleration of the brain upon impact—with the same types of solutions—helmets with layers configured for relative sliding as described in the Asserted Patents. For example, as set forth in the claim chart Exhibits A through E, as noted in the chart above, each reference teaches helmets with layers that allow relative sliding as described in the Asserted Patents.

2. <u>The ’319 patent</u>

Each of the asserted claims is invalid under 35 U.S.C. § 103 because it would have been obvious to one of ordinary skill in the art at the time of the invention in light of one or more prior

art references and the understanding of one of ordinary skill in the art. In accordance with the agreed schedule, prior art references rendering the asserted claims of the '319 patent obvious are discussed below and included in the claim chart Exhibits A listed in the chart above. Further reasons to combine the references identified include the nature of the problem being solved, the express, implied and inherent teachings of the prior art, the knowledge of persons of ordinary skill in the art, that such combinations would have yielded predictable results, and such combinations would have represented known alternatives to a person of ordinary skill in the art.

a) Obviousness Combinations

The accompanying charts identify how each prior art reference discloses the limitations of the asserted claims of the '319 patent on a limitation-by-limitation basis at least under Plaintiff's apparent infringement theories and/or claim interpretations, and select combinations are identified below. If Plaintiff argues that any particular prior art reference lacks any feature for which no combining references are provided in the relevant chart, a person of ordinary skill in the art as of any priority date for the '319 patent would at a minimum have been motivated to modify the reference to include the allegedly missing feature, or to combine it with other references that include that feature, as discussed below. The obviousness combinations are listed below (and it should be understood that each listed combination can also include the knowledge of a person of ordinary skill in the art):

'319 Patent Claims are Obvious under 35 U.S.C. § 103 **Claim, Basis, References**
• Claims 10 and 20 are obvious over Weber in view of Piper • Claims 10 and 20 are obvious over Weber in view of Ferrara 2006 • Claims 10 and 20 are obvious over Weber in view of Puchalski • Claims 10 and 20 are obvious over Weber in view of Copeland • Claims 10 and 20 are obvious over Weber in view of Madey • Claims 6-11 and 17-20 are obvious over Halldin-I in view of any one of Halldin-II, Weber, Ferrara 2006, Dotsuko, Ferrara 2007, Kleiven, Madey, Hawkins, and Halldin-III • Claims 6-11 and 17-20 are obvious over Halldin-I in view of any one of Halldin-II, Weber, Ferrara 2006, Dotsuko, Ferrara 2007, Kleiven, Madey, Hawkins, and Halldin-III, and further in view of any one of Piper, Ferrara 2006, Puchalski, Copeland, or Madey

’319 Patent Claims are Obvious under 35 U.S.C. § 103 Claim, Basis, References
• Claims 6-11 and 17-20 are obvious over Von Holst in view of any one of Halldin-II, Weber, Ferrara 2006, Dotsuko, Ferrara 2007, Kleiven, Madey, Hawkins, and Halldin-III • Claims 6-11 and 17-20 are obvious over Von Holst in view of any one of Halldin-II, Weber, Ferrara 2006, Dotsuko, Ferrara 2007, Kleiven, Madey, Hawkins, and Halldin-III, and further in view of any one of Piper, Ferrara 2006, Puchalski, Copeland, or Madey • Claims 9, 10, 19, and 20 are obvious over Kleiven in view of Piper • Claims 9, 10, 19, and 20 are obvious over Kleiven in view of Ferrara 2006 • Claims 9, 10, 19, and 20 are obvious over Kleiven in view of Puchalski • Claims 9, 10, 19, and 20 are obvious over Kleiven in view of Copeland • Claims 9, 10, 19, and 20 are obvious over Kleiven in view of Madey • Claims 9 and 19 are obvious over Kleiven in view of Ferrara 2007 • Claims 9, 10, 19 and 20 are obvious over Hawkins in view of Piper • Claims 9, 10, 19 and 20 are obvious over Hawkins in view of Ferrara 2006 • Claims 9, 10, 19 and 20 are obvious over Hawkins in view of Puchalski • Claims 9, 10, 19 and 20 are obvious over Hawkins in view of Copeland • Claims 9, 10, 19 and 20 are obvious over Hawkins in view of Madey • Claims 9 and 19 are obvious over Hawkins in view of Ferrara 2007 • Claims 6-9, 11, and 17-19 are obvious over Weber in view of Nichols • Claims 6-9, 11, and 17-19 are obvious over Weber in view of Von Holst • Claims 6-8, 11, and 17-18 are obvious over Kleiven or Hawkins, in view of Nichols • Claims 6-8, 11, and 17-18 are obvious over Kleiven or Hawkins, in view of Von Holst • Claims 9, 10, 19, and 20 are obvious over Weber, Kleiven, or Hawkins, in view of Piper, Ferrara 2006, Puchalski, Copeland, or Madey, and further in view of Nichols • Claims 9, 10, 19, and 20 are obvious over Weber, Kleiven, or Hawkins, in view of Piper, Ferrara 2006, Puchalski, Copeland, or Madey, and further in view of Von Holst • Claims 6-11 and 17-20 are obvious over Von Holst in view of Nichols • Claims 6-11 and 17-20 are obvious over Halldin-I, in view of Nichols or Von Holst • Claims 6-11 and 17-20 are obvious over Halldin-I, in view of Nichols or Von Holst, and further in view of any one of Piper, Ferrara 2006, Puchalski, Copeland, or Madey • Claims 6-11 and 17-20 are obvious over Halldin-I in view of any one of Halldin-II, Weber, Ferrara 2006, Dotsuko, Ferrara 2007, Kleiven, Madey, Hawkins, and Halldin-III, and further in view of Nichols or Von Holst • Claims 6-11 and 17-20 are obvious over Halldin-I in view of any one of Halldin-II, Weber, Ferrara 2006, Dotsuko, Ferrara 2007, Kleiven, Madey, Hawkins, and Halldin-III, and further in view of Nichols or Von Holst, and further in view of any one of Piper, Ferrara 2006, Puchalski, Copeland, or Madey • Claims 6-11 and 17-20 are obvious over Von Holst in view of any one of Halldin-II, Weber, Ferrara 2006, Dotsuko, Ferrara 2007, Kleiven, Madey, Hawkins, and Halldin-III, and further in view of Nichols • Claims 6-11 and 17-20 are obvious over Von Holst in view of any one of Halldin-II, Weber, Ferrara 2006, Dotsuko, Ferrara 2007, Kleiven, Madey, Hawkins, and Halldin-III,

’319 Patent Claims are Obvious under 35 U.S.C. § 103 Claim, Basis, References
and further in view of Nichols, and further in view of any one of Piper, Ferrara 2006, Puchalski, Copeland, or Madey • Claims 9, 10, 19, and 20 are obvious over the Schutt DNA Pro Plus in view of any of Piper, Ferrara 2006, Copeland, Madey, the POC Trabec Race, POC Receptor Backcountry MIPS, POC Cortex DH, Xenith X1, the TSG Kraken, Burton RED Hi-Fi, Lazer Superskin, and Back on Track EQ2 helmets. • Claims 9, 10, 19, and 20 are obvious over the Schutt Ion 4D in view of any of Piper, Ferrara 2006, Copeland, Madey, POC Receptor Backcountry MIPS, POC Cortex DH, Xenith X1, Burton RED Hi-Fi, Lazer Superskin, and Back on Track EQ2 helmets. • Claims 9, 10, 19, and 20 are obvious over the Lazer P-Nut in view of any of Piper, Ferrara 2006, Copeland, Madey, the POC Trabec Race, POC Receptor Backcountry MIPS, POC Cortex DH, Xenith X1, the TSG Kraken, Burton RED Hi-Fi, Lazer Superskin, and Back on Track EQ2 helmets. • Claims 9, 10, 19 and 20 are obvious over Kleiven in view of any of Piper, the POC Trabec Race, POC Receptor Backcountry MIPS, POC Cortex DH, Xenith X1, the TSG Kraken, Burton RED Hi-Fi, Lazer Superskin, and Back on Track EQ2 helmets. • Claims 9, 10, 19, and 20 are obvious over Hawkins in view of any of Ferrara 2006, the POC Trabec Race, POC Receptor Backcountry MIPS, POC Cortex DH, Xenith X1, the TSG Kraken, Burton RED Hi-Fi, Lazer Superskin, and Back on Track EQ2 helmets • Claims 6-11 and 17-20 are obvious over the Schutt Ion 4D in view of the TSG Kraken and POC Trabec Race. • Claims 6-9, 11, and 17-19 are obvious in view of Weber • Claims 6-11 and 17-20 are obvious in view of Von Holst • Claims 6-11 and 17-20 are obvious in view of Halldin-I • Claims 6-8, 11, and 17-18 are obvious in view of Kleiven • Claims 6-8, 11, and 17-18 are obvious in view of Hawkins • Claims 6-9, 11, and 17-19 are obvious in view of the Schutt Ion 4D Helmet • Claims 6-9, 11, and 17-19 are obvious in view of the Schutt DNA Pro Plus • Claims 6-9, 11, and 17-20 are obvious in view of the TSG Kraken • Claims 6-9, 11, and 17-20 are obvious in view of the Burton RED Hi-Fi Helmet

b) Reasons to Modify, Extend, or Combine Claimed Concepts

As set forth in Sections IV and V and in the claim chart Exhibits A listed in the above chart, the prior art references and products demonstrate that the concepts described in the ’319 patent were well known and in public use as of the earliest possible priority date of the ’319 patent. The ’319 patent does not introduce any new concepts for helmets allowing for relative sliding between layers, nor does it combine known concepts in any inventive or non-obvious manner. The

disclosure of the references and reasons for modifying and/or combining such references include those identified in the General Comments set out in Section IV above, the analysis below, and the evidence cited in the claim chart Exhibits A, which are incorporated by reference into this section as well as the following:

i) A lining layer that conforms to the human head and is made of foam would have been an obvious feature of helmets allowing relative sliding and reducing rotational acceleration of the brain

To the extent Plaintiff contends that the prior art identified as anticipating claims 9, 10, 19, and 20 does not disclose a lining layer that conforms to the human head and is made of foam, a POSITA would have found obvious the modification of a helmet allowing relative sliding to include such a lining layer.

A POSITA would have been motivated to modify any helmet to include a foam-based comfort liner with a reasonable expectation of success. As discussed in Section V, foam comfort liners are standard in most modern helmets. *See, e.g.*, Newman at 47 ("Modern (i.e. post 1975) cycling helmets have typically used small polyester foam pads that can be strategically placed inside the helmet by the wearer to accommodate different head shapes and sizes."); Bosch, 2 ("The purpose of the comfort padding liner is to increase the wearing comfort of the helmet and to provide a good fit on the head. It consists of low-density, flexible, open-celled, polyurethane or PVC foams and is often faced with a cloth layer."); Weber at [0045] (helmet contains "a 'comfort' liner 123 configured to closely surround the head of the wearer"), [0036], [0050]; Piper at [0109] (disclosing a "comfort liner 212 next to the head 200 of the wearer" that is, e.g., "lower density, open-cell foam material that easily conforms to the head"); Von Holst at 4:26-29 (describing an inner shell 3 with softer inner layer 3' "made of … polyurethane foam"); Puchalski at 1:52-55 (a "padding or cushioning may also be provided along the inside of the shell for increased comfort, better fit and to assist in the absorption of any impact forces"), cl. 9; Ferrara 2006 (US2006/0059606) at [0060] ("[I]n FIG. 6, a compressible (e.g., foam) internal liner 32′ can then

be added (step 80) to the multilayer shell 30′….The shape of the internal liner 32′ conforms to the general shape of the shell 30′ and to the shape of a wearer's head."); Copeland (US2006/0070170) at [0022-23] (describing "[a] shock absorber insert 18 [] received in … recesses" that "includes a foam member 19"), cl. 17, Fig. 2); Ferrara 2007 (US2007/0190293) at [0101] ("Therefore, the bellows capsules as a whole provide a relatively soft and comfortable inner liner next to the wearer's head."); Madey at [0025] ("Helmet 40 comprises an inner helmet layer (e.g., an energy-absorbing layer) 41, a helmet retention system (e.g., straps 42 and foam padding inserts, not shown) to affix inner helmet layer 41 to a wearer's head…."); POC Trabec Race, POC Receptor Backcountry MIPS, POC Cortex DH, Xenith X1, the TSG Kraken, Burton RED Hi-Fi, Lazer Superskin, and Back on Track EQ2.

A POSITA would have understood that user comfort is a critical feature for helmet uptake and usability and that comfort padding/liners that conform to the human head provide such comfort. Thus, a POSITA viewing a disclosure that does not expressly describe a comfort padding/lining layer would have been motivated and would have found it obvious to look to other references to incorporate this feature. The reasons for this were well established in the art. For example, comfort liners were described as providing general comfort and also improving fit for users. Weber at [0045] (describing "a 'comfort' liner 123 configured to closely surround the head of the wearer"); *see also id.* at [0036], [0050]. In addition, foam-based comfort liners were understood to "easily conform[] to the head" and "provide[] sweat and heat management characteristics." Piper at [0109]. A POSITA would have been motivated to incorporate a foam-based comfort liner such as that described in Piper into other helmets to provide comfort, improve fit, and achieve heat and sweat management. A POSITA would have understood that reducing heat by using a foam comfort liner would also enhance helmet safety by: (1) reducing risks of heat stress for the user and (2) increasing helmet use on hot days, when users might otherwise find it too uncomfortable to wear.

A POSITA would further have been motivated and found it obvious to include a lining layer that conforms to the human head and/or is made of foam because there were a finite number of predictably successful solutions to the problem of creating a flexible, comfortable, lining layer that connects to the head while reducing heat and managing sweat, of which comfort liners, and specifically foam comfort liners, were one. Using foam-based lining layers in helmets would have constituted utilizing a known structure in a known way to yield predictable results. As discussed above, foam-based comfort liners/lining layers were standard in modern helmets, and indeed comfort liners/lining layers in general were standard in helmet design before 2011. A POSITA would have a finite number of choices of whether to include a lining layer at all (either including one or not including one) as well as what material to use (foam-based materials covered in fabric are a near universal material), and implementing a foam-based lining layer would have yielded predictable results of improved comfort and safety.

A POSITA would have had a reasonable expectation of success of incorporating a foam-based comfort liner/lining layer in a helmet of any of the references identified herein. As discussed above, foam-based liners were standard in modern helmets, and a POSITA would thus already know how to incorporate such liners into other helmets. Indeed, Ferrara 2006 teaches how a POSITA might incorporate such a helmet. Ferrara 2006 at [0060] (describing FIG. 6) ("The internal liner 32′ is attached (e.g., with an adhesive) to an internally facing surface of the inner layer 28′. The shape of the internal liner 32′ conforms to the general shape of the shell 30′ and to the shape of a wearer's head."). A POSITA would also have understood, as a matter of routine implementation, that there were also alternative ways to incorporate such comfort liners/lining layers, such as with various fixations (e.g., snap fixation) or by incorporating them into recesses within an inner layer (*see, e.g.*, Copeland at [0022-23]).

For example, a POSITA would have been motivated to combine the comfort liner/lining layer of Piper, Ferrara 2006, Puchalski, Copeland, Madey, or Ferrara 2007, or the POC Trabec Race, POC Receptor Backcountry MIPS, POC Cortex DH, Xenith X1, the TSG Kraken, Burton

RED Hi-Fi, Lazer Superskin, and Back on Track EQ2 helmets with the helmets of at least, e.g., Weber, Kleiven, or Hawkins, Von Holst, Halldin-I, or with the Lazer P-Nut, Schutt Ion 4D, or Schutt DNA Pro Plus helmets. Each is analogous art to the claims of the Asserted Patents. Each is analogous art to the claims of the Asserted Patents. All references address the same or similar problem as the Asserted Patents, such as reducing rotational acceleration on the brain during impacts with the head or shearing in response to impacts. *See, e.g.*, Weber, [0002] (disclosing "protective helmets that protect the human head against repetitive impacts so as to significantly reduce the likelihood of both translational and rotational brain injury and concussions"); Kleiven, [0002] (directed to "an improved material/structure that reduces angular/rotational motion or acceleration of the human brain and body caused by oblique impact. In the material/structure, there is an inner layer and an outer layer and a separation between the inner layer and the outer layer by spikes that are constructed so that they permit displacement of the outer layer relative to the inner layer, hereby reducing the force from an oblique impact."); Hawkins at [0006] (describing "[a] method of absorbing compression forces imparted to a surface by an impacting object in accordance with one exemplary implementation of a present invention includes converting at least some compression forces into shear forces while the object is in contact with the surface and imparting a rotational force to the object while the object is in contact with the surface"); Ferrara 2006 at [0005] (recognizing that currently marketed helmets "generally do not diminish the rotational forces experienced by the brain" and providing a solution of a middle layer that can "resiliently shear with respect to the inner layer in response to a tangential impact to the outer layer"); Piper, [0002] (disclosing "protective headgear intended to reduce angular acceleration of the human brain caused by an impact . . . ."); Piper, [0005] ("Acceleration along an arc is called angular or rotational acceleration."); Puchalski at 12:55-58 (describing relative sliding between shell layers); Copeland at [0022-23] (describing foam members for shock absorption and additional comfort); Madey at [0024] ("[T]he present invention provides a means of diverting and/or absorbing tangential impact energy before that energy is translated to the wearer's head and

neck."); Ferrara 2007 at Abstract, (describing protective structures to protect a body from impacts and absorb "tangential components").

A POSITA would have found it obvious to combine these elements as a matter of routine implementation, as their combination is a straightforward and predictable combination of known elements according to known methods to yield predictable results, and the above comfort liners/lining layers are ready for improvement through incorporation into any of the above helmets. The known technique of using comfort liners to improve fit, comfort, and heat management would improve the above-mentioned helmets in similar ways as those disclosing comfort liners.

As one example, Weber discloses "a 'comfort' liner 123 configured to closely surround the head of the wearer," Weber, [0044-0045], but it does not include additional details regarding such comfort liner. Piper (for example) provides those details, including its materials (e.g., "lower-density, open-cell foam material") and its characteristics ("provides sweat and heat management characteristics"). Piper, [0109]. Similarly, Ferrara 2006 describes how "a compressible (e.g., foam) internal liner 32′ can then be added (step 80) to the multilayer shell 30′. FIG. 6 shows a cross-section of a portion of the shell 30′ and of the internal liner 32′. The internal liner 32′ is attached (e.g., with an adhesive) to an internally facing surface of the inner layer 28′. The shape of the internal liner 32′ conforms to the general shape of the shell 30′ and to the shape of a wearer's head." Ferrara 2006 at [0060]. Similarly, Puchalski states that "padding or cushioning may also be provided along the inside of the shell for increased comfort, better fit and to assist in the absorption of any impact forces." Puchalski at 1:53-55. Copeland also describes how a helmet has inserts "includ[ing] a foam member," which is "manufactured from a softer foam material than base 12 for additional comfort." Copeland at [0023]. Madey also describes how a "[h]elmet 40 comprises an inner helmet layer (e.g., an energy-absorbing layer) 41, a helmet retention system (e.g., straps 42 and foam padding inserts, not shown) to affix inner helmet layer 41 to a wearer's head…." Madey at [0025]. And Ferrara 2007 describes structures that "project a selected distance below inner layer 244 and together form a conformable inner liner." Ferrara 2007 at [0097]. A

POSITA would have been motivated to modify Weber's helmet to incorporate a more-specific foam comfort liner as described in Piper, Ferrara 2006, Puchalski, Copeland, or Madey to achieve comfort, fit, and heat and sweat management. A POSITA would have found it obvious to combine these elements as a matter of routine implementation, as it is a straightforward and predictable combination of known elements according to known methods to yield predictable results, and Weber's general comfort liner is ready for improvement through incorporation of Piper's, Ferrara 2006's, Puchalski's, Copeland's, Madey's, or Ferrara 2007's liner. This known technique of adding a user comfort layer would improve Weber's helmet in a similar way to Piper, Ferrara 2006, Puchalski, Copeland, Madey, or Ferrara 2007.

Further, a POSITA would have had a reasonable expectation of success in combining the comfort liner/lining layer of Piper, Ferrara 2006, Puchalski, Copeland, Madey, or Ferrara 2007. Ferrara 2006 with the helmet of Weber because such comfort liners were a known structure that had been demonstrated to improve safety and comfort, including heat and sweat management. Additionally, Ferrara 2006 expressly provides teachings on how a lining layer could be incorporated into a helmet, Ferrara at [0060], as does Copeland, Copeland at [0022-23], and a POSITA would have reasonably expected to be able to incorporate a lining layer into Weber in a similar way.

For another example, a POSITA would have been motivated to combine the comfort liner of Piper, Ferrara 2006, Puchalski, Copeland, Madey, or Ferrara 2007 with the helmet of Kleiven. Each is analogous art to the claims of the Asserted Patents. As with the claims of the asserted patents, Kleiven addresses the problem of reducing rotational acceleration on the brain during impacts with the head. Kleiven is directed to the field of "a material/structure that protects the head and body in a collision or against other types of impact. Specifically, it relates to an improved material/structure that reduces angular/rotational motion or acceleration of the human brain and body caused by oblique impact." Kleiven, [0002]. Kleiven also addresses that problem in the same way as the claims of the asserted patents, by allowing relative sliding to reduce rotational

acceleration on the brain during impacts with the head. Kleiven, [0002] ("In the material/structure, there is an inner layer and an outer layer and a separation between the inner layer and the outer layer by spikes that are constructed so that they permit displacement of the outer layer relative to the inner layer, hereby reducing the force from an oblique impact.").

A POSITA would have been motivated to combine Kleiven's helmet with Piper's, Ferrara 2006's, Puchalski's Copeland's, Madey's, or Ferrara 2007's comfort liner for all the reasons described above. Further, Kleiven recognizes that foam on the interior of a helmet can "improve[] the capacity of the headgear to conform to the head." Kleiven, [0014]. This would have motivated a POSITA to look to disclosures of such interiors in helmets, especially such disclosures that solve the same problem. Piper's comfort liner is also positioned under an inner layer similar that disclosed in Kleiven, further motivating a POSITA to combine the two. As discussed above, a POSITA would also have reasonably expected success due to these similarities and for additional reasons: comfort layers/lining layers were standard in helmets, and Piper's, Ferrara 2006's, Puchalski's, Copeland's, Madey's, or Ferrara 2007's comfort liner would easily fit into Kleiven's design. A POSITA combining these references would also reasonably expect success because such comfort liners were a known structure that had been demonstrated to improve safety and comfort, including heat and sweat management, including all the reasons described above, and addition of such a foam liner would have been a matter of predictable and routine implementation within the knowledge and skill of a POSITA.

As another example, a POSITA would have been motivated to combine Hawkins' helmet with Piper's, Ferrara 2006's, Puchalski's, Copeland's, Madey's, or Ferrara 2007's comfort liner for all the reasons previously described. Further, Hawkins describes a helmet with "machine elements" and matrix material (such as fluids) that can shear and cause relative sliding in response to impact forces may "be stacked so that there will be more than one layer of machine elements." Hawkins at [0050], [0053]; [0048]. Although Hawkins does not expressly describe a foam-based comfort lining/lining layer, a POSITA would have been motivated to incorporate such a comfort

liner from Piper, Ferrara 2006, Puchalski, Copeland, Madey, or Ferrara 2007 in Hawkins' helmet. Hawkins describes the specifics of its force diversion apparatus in detail across multiple implementations, but it does not provide further detail on other components of a helmet. A POSITA reading Hawkins would have understood that comfort liners/lining layers to conform to a head are desirable and ubiquitous in helmet design and would thus look to references such as Piper, Ferrara 2006, Puchalski, Copeland, Madey, or Ferrara 2007 for teachings on how to incorporate this feature. A POSITA would also have reasonably expected success in incorporating a foam-based comfort liner/lining layer into Hawkins for the same or similar reasons as described above.

As another example, a POSITA would have been motivated to combine the Lazer P-Nut, Schutt Ion 4D, or Schutt DNA Pro Plus helmets with Piper's, Ferrara 2006's, Puchalski's, Copeland's, Madey's, or Ferrara 2007's comfort liner for all the reasons previously described. A POSITA would also have been motivated to combine the Lazer P-Nut, Schutt Ion 4D, or Schutt DNA Pro Plus helmets with the foam liners disclosed in the POC Trabec Race, POC Receptor Backcountry MIPS, POC Cortex DH, Xenith X1, the TSG Kraken, Burton RED Hi-Fi, Lazer Superskin, and Back on Track EQ2 helmets, for the reasons described, including that a POSITA would have known these foam-based comfort liners are a common and desirable helmet design element. A POSITA would have had a reasonable expectation of success because comfort liners of this type were a known structure for improving safety and comfort and their inclusion would have been a predictable matter of routine implementation for a POSITA.

ii) <u>Incorporating mechanical connections into sliding layers would have been an obvious feature of helmets allowing relative sliding and reducing rotational acceleration of the brain</u>

To the extent Plaintiff contends that the prior art identified as anticipating the claims does not disclose the connection of layers, such as via mechanical connections (e.g., trusses or elastomeric connectors), to allow relative displacement/sliding a POSITA would have found

obvious the modification of a helmet allowing relative sliding and reducing rotational acceleration of the brain to include such a connection. A POSITA would have been motivated to and found it obvious to physically connect layers with mechanical connections because doing so constituted utilizing a known structure to further reduce rotational acceleration of the brain during impact, to yield predictable results, and as a way of improving the structural integrity, and overall safety, of the helmet. Utilizing a plurality of mechanical connections between layers configured to move/slide relative to one another was well known before 2011. *See, e.g.*, Halldin-II; Halldin-III; Weber; Kleiven; Ferrara 2006; Ferrara 2007; Madey; Hawkins; Dotsuko.

Further, a POSITA would have been motivated and found it obvious to incorporate mechanical connections between layers configured to move/slide relative to one another because there were a finite number of predictably successful solutions to the problem of connecting such layers and permitting relative sliding between them in the manner the Asserted Patents discuss. For example, a POSITA would have the choice of providing mechanical connection element(s) at the periphery, e.g., at single points at the exterior of the helmet, or at multiple internal points, including within the sliding layers. A POSITA would have been motivated to incorporate multiple of such internal attachment points because they would protect against failure of one or more attachment points and also for additional energy absorption and dissipation throughout the helmet as force is imparted on the connecting members.

Further, a POSITA would have had a reasonable expectation of successfully incorporating such internal fixations as described in the above references in a layered helmet. As discussed above, including mechanical connectors between sliding layers was well known in the field of helmet design. A POSITA would have had a reasonable expectation of successfully including additional internal physical fixation in a helmet because it was a predictable matter of routine design and implementation, including, for example, through use of typically used adhesives or attachment techniques.

For example, Halldin-II teaches a helmet with an outer shell connected to an attachment device by "fixation members." Halldin-II, [0013]. Halldin-II teaches multiple types of fixation members, including members 4a-4d that "absorb energy by deforming in an elastic, semi-elastic or plastic way." Halldin-II, [0043], Fig. 3.

Each of Halldin-II's fixation members connects layers of the helmet while (1) absorbing energy and (2) allowing relative sliding between the layers. Figures 2 and 3 teach fixation members 4a and 4b. *Id.*, [0047] (Figure 3, with fixation members, allows "energy absorbing layer 2 to slide in relation to the attachment device 3" and "[t]he fixation absorbs the rotational forces by deforming elastically or semi-elastically), Figs. 2-3 (outer layer 2 connected at portion 9 and inner attachment device 3 connected at portion 8):

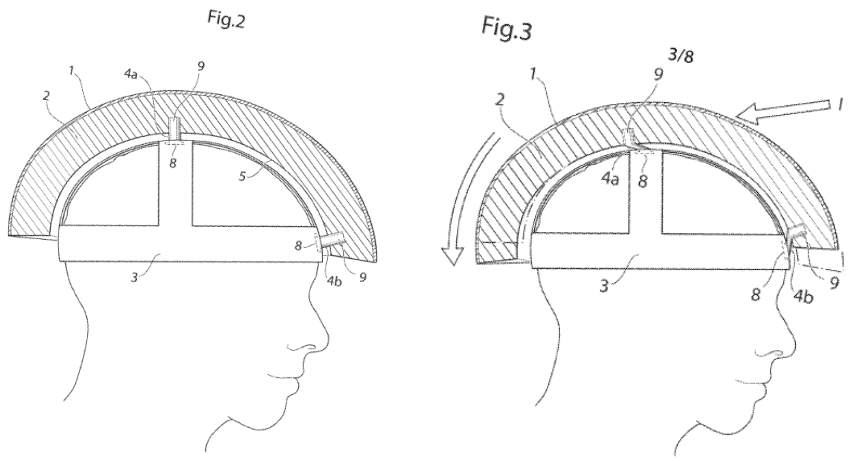

Halldin-II, Figs. 2, 3.

A POSITA would have been motivated to modify, for example, Von Holst to incorporate Halldin-II's fixation members. Von Holst and Halldin-II (which share a common inventor) are analogous to the Asserted Claims: both are directed to the same field of endeavor (helmet safety design), and both address the same problem of improved helmet sliding mechanisms. Von Holst describes layers connected through transformer layers and a connecting member, and the later-filed Halldin-II teaches additional ways to connect layers while maintaining desired sliding to

address impact forces. A POSITA would have been motivated to include Halldin-II's fixation connections, which not only connect layers but additionally "absorb energy" by "deforming," Halldin-II, [0043], which would supplement the energy absorption achieved by Von Holst's sliding layers 4.

Furthermore, a POSITA would have been motivated to use Halldin-II's internal connections (i.e., members 4a-d) instead of or in addition to Von Holst's peripheral connecting member 5. Halldin-II teaches that a POSITA would have known that fixation on the periphery and internal fixation are alternatives that could be used separately or together. *See* Halldin-II, [0057], Fig. 11, [0064] (discussing combination of "master fixation member" and "additional fixation members"). A POSITA would have been motivated to improve Von Holst by adding internal fixation connections to increase the degree of connection throughout the helmet and provide additional mechanisms to absorb energy. A POSITA would have found it obvious to combine these elements as a matter of routine implementation, as their combination is a straightforward and predictable combination of known elements according to known methods to yield predictable results. Von Holst's helmet with sliding layers is ready to be improved by incorporating of a layer of internal fixation members that absorbs additional energy. The known technique from Halldin-II of using fixation members to create a connecting layer and absorb energy would improve Von Holst's helmet in a similar way to Halldin-II's helmet.

A POSITA would have a reasonable expectation of success in modifying Von Holst as described. It is easy to apply aspects of Halldin-II's helmet design to Von Holst. Where Von Holst describes sliding layers, Halldin-II describes a "sliding facilitator 5 [Fig. 2] [that] may be a low friction material," which "is provided on outside of the attachment device 3 facing the energy absorbing layer 2" or, alternatively, "on the inside of the energy absorbing layer 2." Halldin-II, [0044]. Halldin-II emphasizes that its fixation members are not usable only with the specific attachment device embodiments in its specification, but instead would have been readily adaptable to other designs, like Von Holst's helmets, as a matter of routine implementation within the skill

of a POSITA: "In other embodiments the attachment device 3 could be … any other design functioning as an attachment device for mounting on a wearer's head." Halldin-II, [0050]. For example, Halldin-II teaches fixation members attached to the outer energy absorbing layer via an "adhesive." Halldin-II, [0052]. Thus, a POSITA would have reasonably expected to be able to implement Halldin-II's fixation members to connect Von Holst's intermediate shell layer to the outer shell.

As another example, a POSITA would have been motivated to combine the helmet of Halldin-I with the connection of layers by fixation members of Halldin-II with a reasonable expectation of success. In addition to the reasons discussed above with Von Holst, both references address the same problem of reducing rotational acceleration on the brain during impacts with the head. Halldin-I, 3:7-11; Halldin-II, [0005], [0047]. Both references also disclose the same solution to that problem: helmets allowing relative sliding to reduce rotational acceleration on the brain during impacts with the head. Halldin-I, 1:5-6, 2:34-35 (disclosing "a protective helmet with an outer shell and an inner shell" such that "the outer shell of the helmet can be displaced relative to the inner shell."); Halldin-II, [0001] (disclosing "a helmet comprising an energy absorbing layer, with or without any outer shell, and a sliding facilitator being provided inside of the energy absorbing layer."). Moreover, both references name the same inventor.

Additionally, Halldin-I describes that its connections are limited to being placed peripherally "where the probability of an application of an outer force is low." Halldin-I, [00014]. Later-filed Halldin-II addresses this limitation by allowing connection at numerous points within the helmet.

Halldin-II's fixation members provide an optimized connection mechanism over Halldin-I, removing the need for flaps outside of the helmet and allowing more points of connection throughout the helmet. For example, Halldin-I states that "[i]n order to further fix the intermediate layer into place it may also be attached to both of the movable layers at a peripheral edge of the intermediate layer. Preferably, the attachment is made at a part of the structure where the

probability of an application of an outer force is low." Halldin-I [00014]. Halldin-I thus poses a design limitation, wherein the connection mechanisms must be placed in specific points, such as the periphery, and was ready for improvement. Halldin-II, which was filed later with a common inventor, recognizes that the connection ***could*** be at the periphery, *see* Halldin-II [0057] ("Fig. 11 shows an embodiment in which the attachment device 3 is fixated to the energy absorbing layer 2 ***at the periphery*** thereof by means of a membrane or sealing foam 24, which could be elastic or adapted for plastic deformation."), but only as one of several alternatives, most of which provide connection mechanisms throughout the helmet. A POSITA would have found it obvious to combine these elements as a matter of routine implementation, as their combination is a straightforward and predictable combination of known elements according to known methods to yield predictable results, and Halldin-I's helmet with sliding layers is ready for improvement through incorporation of a layer of internal fixation members that additionally absorbs energy. The known technique of using fixation members from Halldin-II to create a connecting layer and absorb energy would improve Halldin-I's helmet in a similar way to Halldin-II.

A POSITA would also have had a reasonable expectation of success in modifying Halldin-I as described for similar reasons as with Von Holst. In addition, it is easy to apply aspects of Halldin-II's helmet design to Halldin-I. Halldin-II describes a "sliding facilitator 5 [Fig. 2] [that] may be a low friction material," which "is provided on outside of the attachment device 3 facing the energy absorbing layer 2" or, alternatively, "on the inside of the energy absorbing layer 2." Halldin-II [0044]. Halldin-II's low-friction layer also has certain similarities with that of Halldin-I, including having a fiber structure. *Compare* Halldin-II [0040] ("If it furthermore conceivable that the sliding is enabled by the structure of the material, for example by the material having a fiber structure such that the fibers slide against each other.") *with* Halldin-I [0004] ("The low friction material comprises fibers. By using fibers as a friction decreasing material the friction between the layers can be decreased."). Halldin-II also teaches multiple ways in which its various embodiments of fixation members could be implemented to connect Halldin-I's intermediate shell

layer to the outer shell via the sliding layer. *See, e.g.*, Halldin-II [0042-43], [0052-56]. Halldin-II also emphasizes that its fixating members are not usable only with the specific attachment device embodiments in the specification: "In other embodiments the attachment device 3 could be … any other design functioning as an attachment device for mounting on a wearer's head."). Thus, a POSITA would have reasonably expected to be able to readily implement Halldin-II's fixation members to connect through Halldin-I's sliding layer and connect Halldin-I's intermediate shell layer to the outer shell (and or to the inner shell).

Additionally, a POSITA would not have been limited to the fixation members of Halldin-II, but would have found other fixation members obvious as well to incorporate into Von Holst or Halldin-I. A POSITA could identify alternative connection mechanism(s) that would have provided mechanical connections for stability while also absorbing energy via deforming and facilitating sliding. For example, A POSITA would have similarly been motivated to modify Von Holst or Halldin-I by incorporating mechanical connection elements of Ferrara 2006 or Dotsuko. Each reference describes physical connections similar to Halldin-II. For example, Ferrara 2006 discloses protective headgear with "an outer layer 20′, an inner layer 28′", and a middle layer comprising a plurality of independent compressible members 50′ and optionally fluid such as liquid or air in interstitial region 52′ disposed between the inner and outer layers 28′, 20′. Ferrara 2006, [0053].

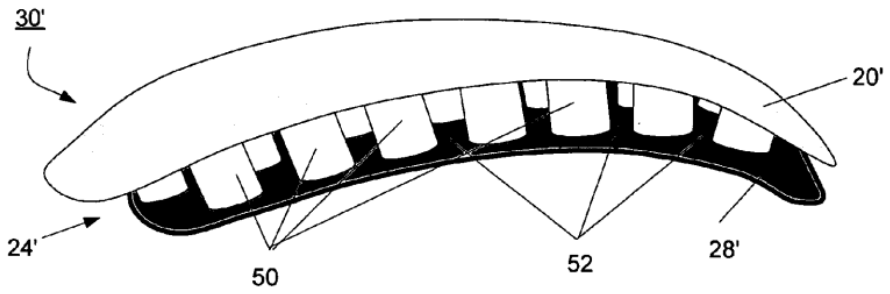

FIG. 4

Ferrara 2006, FIG. 4.

Ferrara 2006's members 50 "compress or shear independently" and "have a resilient, compressible solid or foam construction." Ferrara 2006, [0053]. This connection via members "enables the outer layer to move during impact independently of the inner layer in a scalp-like fashion." Ferrara 2006, [0056]; *see also id.*, [0032] ("respond to an impact by…rotating by the outer layer and the energy-absorbing layer with respect to the inner layer.").

Similarly, Halldin-III (which also shares a common inventor with Von Holst and Halldin-I) discloses a locking device for use in a helmet with sliding layers such as that described in EP-A1-1246548 (the European counterpart to Von Holst). Halldin-III at [0012-13]. The locking device has a "lower portion of the layer-guiding member 10 [that] can be elastic in its longitudinal direction L and in the direction of propagation plane P of the inner layer and the outer layer 4, 6."

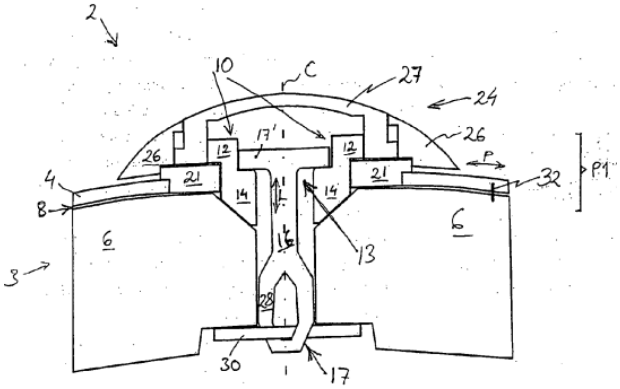

FIG. 1A

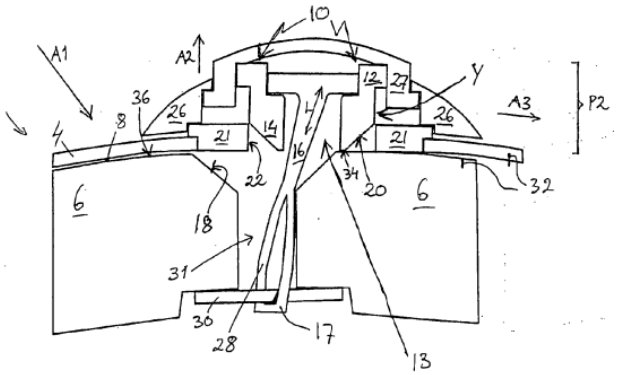

FIG. 1B

Halldin-III at [0021], Figs. 1A-B.

Similarly, Dotsuko discloses a helmet with an inner liner 50 connected to liner 40 and outer shell 20 with liner 30 comprising a plurality of elastic straps and an elastic body disposed between the inner and outer layers.

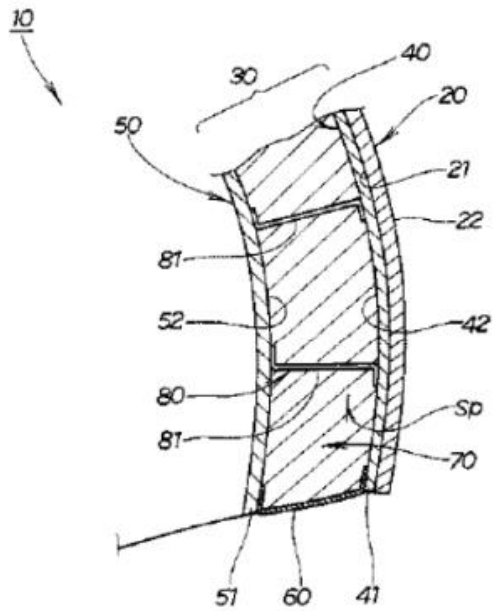

Dotsuko, [0013], [0017].

A POSITA would have been motivated to modify Von Holst's and/or Halldin-I's sliding layers to additionally include Ferrara 2006's, Halldin-III's, or Dotsuko's compressible members and elastic straps with a reasonable expectation of success for similar reasons as with Halldin-II. Additionally, Ferrara 2006's compressible members would readily fit into Von Holst's and Halldin-I's sliding layer: Ferrara 2006's members can vary in lengths, and "the outer layer 20′ and inner layer 28′ approach and may touch each other so that any gap between the layers 20′, 28′ either is imperceptible or does not exist." Ferrara 2006 at [0056]. And further with respect to Von Holst, given that Ferrara 2006 further utilizes fluids, similar to Von Holst, a POSITA would have been motivated to incorporate members similar to those used in Ferrara 2006 to provide additional connection points throughout the sliding layer for stability and energy absorption while still "enabl[ing] the outer layer to move during impact independently of the inner layer in a scalp-like fashion." Ferrara 2006 at [0056].

Similarly, Halldin-III's locking device is expressly described as fitting within a helmet similar to Von Holst, and which is has similar key features as Halldin-I's helmet (e.g., and outer and inner layer with a sliding layer that may include, for example, "[t]eflon, oil, air or the similar.") Halldin-III recognizes various advantages of its device by which a POSITA may be motivated to incorporate it into Von Holst or Halldin-I, including a design where "the energy-absorbing properties of the protective helmet only are activated when the helmet is subjected to oblique impacts that exceed a certain power" and one where it is easier to tell "if a displacement of the layers has taken place and the energy-absorbing function has been released, whereby the helmet is consumed" and must be replaced. Halldin-III at [0007-8]. A POSITA would thus have been motivated to incorporate Halldin-III's locking device into either Von Holst or Halldin-I, and they would have had a reasonable expectation of successfully doing so for similar reasons as described above.

Similarly, Dotsuko describes an additional connection mechanism via "multiple straps 81 … made of an elastic material such as rubber. As these strap 81 [] have certain elongation properties, they allow a certain degree of relative rotation of the shell 20 and the outer liner 40 with respect to the inner liner 50, while preventing excessive relative rotation beyond this range." Dotsuko at [0017]. Dotsuko's elastic straps thus perform a similar function as Von Holst's and Halldin-I's periphery connecting members, which counteract mutual displacement among the sliding layers and deform to absorb energy, but provide multiple points over which energy may be absorbed via deformation. A POSITA would thus have been motivated to incorporate Dotsuko's elastic straps into either Von Holst or Halldin-I, and they would have had a reasonable expectation of successfully doing so for similar reasons as described above.

As another example, a POSITA would have been motivated to modify the energy absorbing layers of the Schutt Ion 4D helmet to include sliding layers operable to absorb rotational and shear forces as disclosed in the TSG Kraken and POC Trabec. The Schutt Ion 4D is designed to absorb energy by flexing. G. Alston Rush et al., *Modified Drop Tower Impact Tests For American*

Football Helmets, J. Visualized Experiments (120):53929 (Feb. 19, 2017), https://pmc.ncbi.nlm.nih.gov/articles/PMC5407596/ (RVST00002711-RVST00002733). The POC Trabec and TSG Kraken are designed to reduce rotational force to the brain through a liner designed to slip on impact. Bicycle Helmet Safety Institute, *Bicycle Helmets for the 2010 Season*, Helmets.org (Feb. 5, 2010), https://web.archive.org/web/20100205103230/http:/www.helmets.org:80/ helmet10.htm (RVST00001316-RVST00001411). Thus, a POSITA would have been motivated to improve the Schutt Ion 4D's reduction of impact forces by including the slidable layers in the POC Trabec and TSG Kraken in order to ensure the helmet could absorb rotational and shear forces.

A POSITA would have a reasonable expectation of success in modifying the Schutt Ion 4D helmet to include slidable layers because it already includes an intermediate flexible layer that allows movement to reduce impact forces.

iii) Using different types of materials for helmet layers to create shell layers would have been an obvious feature of helmets to reduce forces on the head and brain and provide safety.

To the extent Plaintiff contends that the prior art identified as anticipating the claims does not disclose an outer, middle, or inner "shell layer," it would have been obvious to use shell layers. At least Weber, Von Holst, Halldin-I, Hawkins, Kleiven, the Schutt Ion 4D Helmet, the Schutt DNA Pro Plus, the TSG Kraken, and the Burton RED Hi-Fi- Helmet all disclose three distinct protective layers that move/slide relative to one another in the manner the patent discusses. *See, e.g.*, '319 patent at 10:60-67 (discussing that outer, middle, and inner "shells" "may vary in weight and strength," and "may" have certain characteristics); *id.* at 7:48-60 (describing materials for shell layers "may" include "plastics, resins, metal, composites," as well as other materials, i.e., "etc"). Additionally, Von Holst expressly describes each of its protective layers as "shells." *See, e.g.*, Von Holst at 6:2-12. Similarly, Nichols describes a helmet with three shell layers. Nichols at Fig. 6 (depicting shells 32 and 31 as well as a third shell in the form of helmet

12); *id.* at cl. 1 ("protective headgear adapted to fit over a hard shell football helmet…."). To the extent Plaintiff contends that claimed "shell layer" required a layer made of a particular material or shape to prevent injury and/or absorb energy, a POSITA would have been motivated to modify Weber, Von Holst, Halldin-I, Hawkins, or Kleiven to include any material and/or shape to have the helmets' layers be "shell layers" based on Nichols or Von Holst. A POSITA would have found it obvious to combine these elements as a matter of routine implementation, as it is a straightforward and predictable combination of known elements according to known methods to yield predictable results, and the above-mentioned helmets' layers are ready for improvement through incorporation of "shells" as described in Von Holst, Nichols, or the state of the art to reduce the forces on the head and brain, including penetrating forces, and to provide safety. Design modifications often require tradeoffs and material selection for hardness, shape, and the ability to absorb/dissipate energy from an impact would have been within a POSITA's skill set as of the priority date. This known technique of adding shells would improve the above-mentioned helmets in a similar way to Von Holst, Nichols, or the state of the art.

A POSITA would further have had a reasonable expectation of successfully incorporating such components into one of the above-mentioned helmets. Incorporating additional or alternate materials into a layer or changing the shape of a layer was a design choice and selecting the appropriate materials to make an inner, middle, and outer shell in a helmet was a predictable matter of routine implementation for a POSITA.

3. <u>The '561 patent</u>

Each of the asserted claims is invalid under 35 U.S.C. § 103 because it would have been obvious to one of ordinary skill in the art at the time of the invention in light of one or more prior art references and the understanding of one of ordinary skill in the art. In accordance with the agreed schedule, prior art references rendering the asserted claims of the '561 patent obvious are discussed below and included in the claim chart Exhibits B listed in the chart above. Further reasons to combine the references identified include the nature of the problem being solved, the

express, implied and inherent teachings of the prior art, the knowledge of persons of ordinary skill in the art, that such combinations would have yielded predictable results, and such combinations would have represented known alternatives to a person of ordinary skill in the art.

a) Obviousness Combinations

The accompanying charts identify how each prior art reference discloses the limitations of the asserted claims of the '561 patent on a limitation-by-limitation basis at least under Plaintiff's apparent infringement theories and/or claim interpretations, and select combinations are identified below. If Plaintiff argues that any particular prior art reference lacks any feature for which no combining references are provided in the relevant chart, a person of ordinary skill in the art as of any priority date for the '561 patent would at a minimum have been motivated to modify the reference to include the allegedly missing feature, or to combine it with other references that include that feature, as discussed below. The obviousness combinations are listed below (and it should be understood that each listed combination can also include the knowledge of a person of ordinary skill in the art):

'561 Patent Claims are Obvious under 35 U.S.C. § 103 **Claim, Basis, References**
• Claim 20 is obvious over Weber in view of Piper • Claim 20 is obvious over Weber in view of Ferrara 2006 • Claim 20 is obvious over Weber in view of Puchalski • Claim 20 is obvious over Weber in view of Copeland • Claim 20 is obvious over Weber in view of Madey • Claim 20 is obvious over Weber, in view of any one of Piper, Ferrara 2006, Puchalski, Copeland, and Madey, and further in view of Nichols • Claim 20 is obvious over Weber, in view of any one of Piper, Ferrara 2006, Puchalski, Copeland, and Madey, and further in view of Von Holst • Claims 1, 7-10, and 16-20 are obvious over Von Holst in view of any one of Halldin-II, Ferrara 2006, Ferrara 2007, Kleiven, Weber, Hawkins, Dotsuko, Madey, and Halldin-III Claims 1, 7-10, and 16-20 are obvious over Von Holst in view of any one of Halldin-II, Ferrara 2006, Ferrara 2007, Kleiven, Weber, Hawkins, Dotsuko, Madey, and Halldin-III, and further in view of any one of Piper, Ferrara 2006, Puchalski, Copeland, or Madey. • Claims 1, 7-10, and 16-20 are obvious over Von Holst, in view of any one of Halldin-II, Ferrara 2006, Ferrara 2007, Kleiven, Weber, Hawkins, Dotsuko, Madey, and Halldin-III, and further in view of Nichols

’561 Patent Claims are Obvious under 35 U.S.C. § 103 Claim, Basis, References
• Claims 1, 7-10, and 16-20 are obvious over Von Holst, in view of any one of Halldin-II, Ferrara 2006, Ferrara 2007, Kleiven, Weber, Hawkins, Dotsuko, Madey, and Halldin-III, and further in view of Nichols, and further in view of any one of Piper, Ferrara 2006, Puchalski, Copeland, or Madey. • Claims 1, 7-10, and 16-20 are obvious over Halldin-I in view of any one of Halldin-II, Ferrara 2006, Ferrara 2007, Kleiven, Weber, Hawkins, Dotsuko, Madey, and Halldin-III. • Claims 1, 7-10, and 16-20 are obvious over Halldin-I in view of any one of Halldin-II, Ferrara 2006, Ferrara 2007, Kleiven, Weber, Hawkins, Dotsuko, Madey, and Halldin-III, and further in view of Nichols, and further in view of any one of Piper, Ferrara 2006, Puchalski, Copeland, or Madey. • Claims 1, 7-10, and 16-20 are obvious in view of any one of Halldin-II, Ferrara 2006, Ferrara 2007, Kleiven, Weber, Hawkins, Dotsuko, Madey, and Halldin-III, and further in view of Nichols • Claims 1, 7-10, and 16-20 are obvious in view of any one of Halldin-II, Ferrara 2006, Ferrara 2007, Kleiven, Weber, Hawkins, Dotsuko, Madey, and Halldin-III, and further in view of Von Holst • Claims 10, 16-17, and 19-20 are obvious over Kleiven in view of Piper • Claims 10, 16-17, and 19-20 are obvious over Kleiven in view of Ferrara 2006 • Claims 10, 16-17, and 19-20 are obvious over Kleiven in view of Puchalski • Claims 10, 16-17, and 19-20 are obvious over Kleiven in view of Copeland • Claims 10, 16-17, and 19-20 are obvious over Kleiven in view of Madey • Claims 10, 16-17, and 19-20 are obvious over Kleiven in view of Piper, Ferrara 2006, Puchalski, Copeland, or Madey, and further in view of Nichols • Claims 10, 16-17, and 19-20 are obvious over Kleiven in view of Piper, Ferrara 2006, Puchalski, Copeland, or Madey, and further in view of Von Holst • Claims 10, 16-17, and 19-20 are obvious over Hawkins in view of Piper • Claims 10, 16-17, and 19-20 are obvious over Hawkins in view of Ferrara 2006 • Claims 10, 16-17, and 19-20 are obvious over Hawkins in view of Puchalski • Claims 10, 16-17, and 19-20 are obvious over Hawkins in view of Copeland • Claims 10, 16-17, and 19-20 are obvious over Hawkins in view of Madey • Claims 10, 16-17, and 19-20 are obvious over Hawkins in view of Piper, Ferrara 2006, Puchalski, Copeland, or Madey, and further in view of Nichols • Claims 10, 16-17, and 19-20 are obvious over Hawkins in view of Piper, Ferrara 2006, Puchalski, Copeland, or Madey, and further in view of Von Holst • Claims 9, 10, 16-17 are obvious over Ferrara 2007 in view of Piper • Claims 9, 10, 16-17 are obvious over Ferrara 2007 in view of Ferrara 2006 • Claims 9, 10, 16-17 are obvious over Ferrara 2007 in view of Puchalski • Claims 9, 10, 16-17 are obvious over Ferrara 2007 in view of Copeland • Claims 9, 10, 16-17 are obvious over Ferrara 2007 in view of Madey • Claims 9, 10, 16-17 are obvious over Ferrara 2007 in view of Piper, Ferrara 2006, Puchalski, Copeland, Madey, and further in view of Nichols

’561 Patent Claims are Obvious under 35 U.S.C. § 103 Claim, Basis, References
• Claims 9, 10, 16-17 are obvious over Ferrara 2007 in view of Piper, Ferrara 2006, Puchalski, Copeland, Madey, and further in view of Von Holst • Claims 9, 10, 16, 17 are obvious over Larry in view of any one of Piper, Ferrara 2006, Puchalski, Copeland, Madey. • Claims 9, 10, 16, 17 are obvious over Larry in view of any one of Piper, Ferrara 2006, Puchalski, Copeland, Madey, and further in view of Nichols or Von Holst. • Claims Claims 10 and 16-17 are obvious over Dotsuko in view of Piper • Claims 10 and 16-17 are obvious over Dotsuko in view of Ferrara 2006 • Claims 10 and 16-17 are obvious over Dotsuko in view of Puchalski • Claims 10 and 16-17 are obvious over Dotsuko in view of Copeland • Claims 10 and 16-17 are obvious over Dotsuko in view of Madey • Claims 10 and 16-17 are obvious over Dotsuko in view of Piper, Ferrara 2006, Puchalski, Copeland, or Madey, and further in view of Nichols • Claims 10 and 16-17 are obvious over Dotsuko in view of Piper, Ferrara 2006, Puchalski, Copeland, or Madey, and further in view of Von Holst • Claims 10 and 16-17 are obvious over Halldin-III in view of Piper • Claims 10 and 16-17 are obvious over Halldin-III in view of Ferrara 2006 • Claims 10 and 16-17 are obvious over Halldin-III in view of Puchalski • Claims 10 and 16-17 are obvious over Halldin-III in view of Copeland • Claims 10 and 16-17 are obvious over Halldin-III in view of Madey • Claims 10 and 16-17 are obvious over Halldin-III in view of Piper, Ferrara 2006, Puchalski, Copeland, or Madey, and further in view of Nichols • Claims 10 and 16-17 are obvious over Halldin-III in view of Piper, Ferrara 2006, Puchalski, Copeland, or Madey, and further in view of Von Holst • Claims 9-10 and 19-20 are obvious over the Schutt DNA Pro Plus in view of any one of Piper, Ferrara 2006, Puchalski, Copeland, Madey, the POC Trabec Race, POC Receptor Backcountry MIPS, POC Cortex DH, Xenith X1, the TSG Kraken, Burton RED Hi-Fi, Lazer Superskin, and Back on Track EQ2 helmets • Claims 1, 7-10, and 16-20 are obvious over the Schutt Ion 4D in view of the POC Trabec Race and TSG Kraken • Claims 9-10 and 19-20 are obvious over the Schutt Ion 4D in view of any one of Piper, Ferrara 2006, Puchalski, Copeland, Madey, POC Receptor Backcountry MIPS, POC Cortex DH, Xenith X1, Burton RED Hi-Fi, Lazer Superskin, and Back on Track EQ2 • Claims 9-10 and 19-20 are obvious over the Lazer P-Nut in view of any one of Piper, Ferrara 2006, Puchalski, Copeland, Madey, POC Trabec Race, POC Receptor Backcountry MIPS, POC Cortex DH, Xenith X1, the TSG Kraken, Burton RED Hi-Fi, Lazer Superskin, and Back on Track EQ2 • Claims 9-10 and 19-20 are obvious over Kleiven in view of any one of Piper and/or POC Trabec Race, POC Receptor Backcountry MIPS, POC Cortex DH, Xenith X1, the TSG Kraken, Burton RED Hi-Fi, Lazer Superskin, and Back on Track EQ2

’561 Patent Claims are Obvious under 35 U.S.C. § 103 Claim, Basis, References
• Claims 9-10 and 19-20 are obvious over Hawkins in view of any one of Ferrara 2006 and/or POC Trabec Race, POC Receptor Backcountry MIPS, POC Cortex DH, Xenith X1, the TSG Kraken, Burton RED Hi-Fi, Lazer Superskin, and Back on Track EQ2 • Claims 1, 7-10, and 16-19 are obvious in view of Weber • Claims 1, 7-10, and 16-19 are obvious in view of Weber and Nichols • Claims 1, 7-10, and 16-19 are obvious in view of Weber and Von Holst • Claims 1, 7-10, and 16-20 are obvious in view of Von Holst • Claims 1, 7-10, and 16-20 are obvious in view of Von Holst and Nichols • Claims 1, 7-10, and 16-20 are obvious in view of Von Holst and Nichols, and further in view of Nichols, and further in view of any one of Piper, Ferrara 2006, Puchalski, Copeland, or Madey • Claims 1, 7-10, and 16-20 are obvious in view of Halldin-I • Claims 1, 7-10, and 16-20 are obvious in view of Halldin-I and Nichols • Claims 1, 7-10, and 16-20 are obvious in view of Halldin-I and Von Holst • Claims 1, 7-10, and 16-20 are obvious in view of Halldin-I and any one of Nichols and Von Holst, and further in view of Nichols, and further in view of any one of Piper, Ferrara 2006, Puchalski, Copeland, or Madey • Claims 1, 7-8, and 18 are obvious in view of Kleiven • Claims 1, 7-8, and 18 are obvious in view of Kleiven and Nichols • Claims 1, 7-8, and 18 are obvious in view of Kleiven and Von Holst • Claims 1, 7-8, and 18 are obvious in view of Hawkins • Claims 1, 7-8, and 18 are obvious in view of Hawkins and Nichols • Claims 1, 7-8, and 18 are obvious in view of Hawkins and Von Holst • Claims 10, 16, and 17 are obvious in view of Ferrara 2006 • Claims 10, 16, and 17 are obvious in view of Ferrara 2006 and Nichols • Claims 10, 16, and 17 are obvious in view of Ferrara 2006 and Von Holst • Claims 10, 16, and 17 are obvious in view of Piper • Claims 10, 16, and 17 are obvious in view of Piper and Nichols • Claims 10, 16, and 17 are obvious in view of Piper and Von Holst • Claims 10, 16, and 17 are obvious in view of Madey • Claims 10, 16, and 17 are obvious in view of Madey and Nichols • Claims 10, 16, and 17 are obvious in view of Madey and Von Holst • Claims 10, 16, and 17 are obvious in view of Nichols • Claim 1, 7, 8 are obvious in view of Larry • Claims 1, 7, 8 are obvious in view of Larry and Nichols • Claims 1, 7, 8 are obvious in view of Larry and Von Holst • Claims 1, 7-10, 16-17, 18 are obvious in view of Ferrara 2007 • Claims 1, 7-8, 10, 16-17, 18 are obvious in view of Ferrara 2007 and Nichols • Claims 1, 7-8, 10, 16-17, 18 are obvious in view of Ferrara 2007 and Von Holst • Claims 10, 16 and 17 are obvious in view of Puchalski • Claims 10, 16 and 17 are obvious in view of Puchalski and Nichols

’561 Patent Claims are Obvious under 35 U.S.C. § 103 Claim, Basis, References
• Claims 10, 16 and 17 are obvious in view of Puchalski and Von Holst • Claims 1, 7-10, and 16-19 are obvious in view of the Schutt Ion 4D Helmet • Claims 1, 7-10, and 16-19 are obvious in view of the Schutt DNA Pro Plus • Claims 1, 7-10, and 16-20 are obvious in view of the TSG Kraken • Claims 1, 7-10, and 16-20 are obvious in view of the Burton RED Hi-Fi Helmet • Claims 10, 16, and 17 are obvious in view of the POC Cortex DH • Claims 10, 16, and 17 are obvious in view of the POC Trabec Race • Claims 10, 16, and 17 are obvious in view of the POC Receptor Backcountry MIPS Helmet • Claims 10, 16, and 17 are obvious in view of the Xenith X1 Helmet • Claims 10, 16, and 17 are obvious in view of the Lazer P-Nut MIPS Helmet • Claims 10, 16, and 17 are obvious in view of the Back on Track EQ2 Helmet

b) Reasons to Modify, Extend, or Combine Claimed Concepts

As set forth in Sections IV and V and claim charts Exhibits B listed in the above chart, the prior art references and products demonstrate that the concepts described in the ’561 patent were well known and in public use as of the earliest possible priority date of the ’561 patent. The ’561 patent does not introduce any new concepts for helmets allowing for relative sliding between layers, nor does it combine these known concepts in any inventive or non-obvious manner. The disclosure of the references and reasons for modifying and/or combining such references include those identified in the General Comments set out in Section IV above, the analysis below, and the evidence cited in claim chart Exhibits B, which are incorporated by reference into this section as well as the following:

i) A lining layer that conforms to the human head and/or is made of foam would have been an obvious feature of helmets allowing relative sliding and reducing rotational acceleration of the brain

To the extent Plaintiff contends that the prior art identified as anticipating claims 9, 19, and 20 does not disclose a lining layer that conforms to the human head and is made of foam, a POSITA would have found obvious the modification of a helmet allowing relative sliding to include such a lining layer.

A POSITA would have been motivated to modify any helmet to include a foam-based comfort liner with a reasonable expectation of success. As discussed in Section V, foam comfort liners are standard in most modern helmets. *See, e.g.*, Newman at 47 ("Modern (i.e. post 1975) cycling helmets have typically used small polyester foam pads that can be strategically placed inside the helmet by the wearer to accommodate different head shapes and sizes."); Bosch, 2 ("The purpose of the comfort padding liner is to increase the wearing comfort of the helmet and to provide a good fit on the head. It consists of low-density, flexible, open-celled, polyurethane or PVC foams and is often faced with a cloth layer."); Weber at [0045] (helmet contains "a 'comfort' liner 123 configured to closely surround the head of the wearer"), [0036], [0050]; Piper at [0109] (disclosing a "comfort liner 212 next to the head 200 of the wearer" that is, e.g., "lower density, open-cell foam material that easily conforms to the head"); Von Holst at 4:26-29 (describing an inner shell 3 with softer inner layer 3' "made of … polyurethane foam"); Puchalski at 1:52-55 (a "padding or cushioning may also be provided along the inside of the shell for increased comfort, better fit and to assist in the absorption of any impact forces"), cl. 9; Ferrara 2006 (US2006/0059606) at [0060] ("[I]n FIG. 6, a compressible (e.g., foam) internal liner 32′ can then be added (step 80) to the multilayer shell 30′….The shape of the internal liner 32′ conforms to the general shape of the shell 30′ and to the shape of a wearer's head."); Copeland (US2006/0070170) at [0022-23] (describing "[a] shock absorber insert 18 [] received in … recesses" that "includes a foam member 19"), cl. 17, Fig. 2); Ferrara 2007 (US2007/0190293) at [0101] ("Therefore, the bellows capsules as a whole provide a relatively soft and comfortable inner liner next to the wearer's head."); Madey at [0025] ("Helmet 40 comprises an inner helmet layer (e.g., an energy-absorbing layer) 41, a helmet retention system (e.g., straps 42 and foam padding inserts, not shown) to affix inner helmet layer 41 to a wearer's head…."); the POC Trabec Race, POC Receptor Backcountry MIPS, POC Cortex DH, Xenith X1, the TSG Kraken, Burton RED Hi-Fi, Lazer Superskin, and Back on Track EQ2 helmets.

A POSITA would have understood that user comfort is a critical feature for helmet uptake and usability and that comfort padding/liners that conform to the human head provide such comfort. Thus, a POSITA viewing a disclosure that does not expressly describe a comfort padding/lining layer would have been motivated and would have found it obvious to look to other references to incorporate this feature. The reasons for this were well established in the art. For example, comfort liners were described as providing general comfort and also improving fit for users. Weber at [0045] (describing "a 'comfort' liner 123 configured to closely surround the head of the wearer"); *see also id.* at [0036], [0050]. In addition, foam-based comfort liners were understood to "easily comform[] to the head" and "provide[] sweat and heat management characteristics." Piper at [0109]. A POSITA would have been motivated to incorporate a foam-based comfort liner such as that described in Piper into other helmets to provide comfort, improve fit, and achieve heat and sweat management. A POSITA would have understood that reducing heat by using a foam comfort liner would also enhance helmet safety by: (1) reducing risks of heat stress for the user and (2) increasing helmet use on hot days, when users might otherwise find it too uncomfortable to wear.

A POSITA would further have been motivated and found it obvious to include a lining layer that conforms to the human head and/or is made of foam because there were a finite number of predictably successful solutions to the problem of creating a flexible, comfortable, lining layer that connects to the head while reducing heat and managing sweat, of which comfort liners, and specifically foam comfort liners, were one. Using foam-based lining layers in helmets would have constituted utilizing a known structure in a known way to yield predictable results. As discussed above, foam-based comfort liners/lining layers were standard in modern helmets, and indeed comfort liners/lining layers in general were standard in helmet design before 2011. A POSITA would have a finite number of choices of whether to include a lining layer at all (either including one or not including one) as well as what material to use (foam-based materials covered in fabric

are a near universal material), and implementing a foam-based lining layer would have yielded predictable results of improved comfort and safety.

A POSITA would have had a reasonable expectation of success of incorporating a foam-based comfort liner/lining layer in a helmet of any of the references identified herein. As discussed above, foam-based liners were standard in modern helmets, and a POSITA would thus already know how to incorporate such liners into other helmets. Indeed, Ferrara 2006 teaches how a POSITA might incorporate such a helmet. Ferrara 2006 at [0060] (describing FIG. 6) ("The internal liner 32′ is attached (e.g., with an adhesive) to an internally facing surface of the inner layer 28′. The shape of the internal liner 32′ conforms to the general shape of the shell 30′ and to the shape of a wearer's head."). A POSITA would also have understood, as a matter of routine implementation, that there were also alternative ways to incorporate such comfort liners/lining layers, such as with various fixations (e.g., snap fixation) or by incorporating them into recesses within an inner layer (*see, e.g.*, Copeland at [0022-23]).

For example, a POSITA would have been motivated to combine the comfort liner/lining layer of Piper, Ferrara 2006, Ferrara 2007, Puchalski, Copeland, or Madey, or the POC Trabec Race, POC Receptor Backcountry MIPS, POC Cortex DH, Xenith X1, the TSG Kraken, Burton RED Hi-Fi, Lazer Superskin, and Back on Track EQ2 helmets with the helmets of at least, e.g., Weber, Kleiven, Hawkins, Ferrara 2007, Halldin-II, Halldin-III, Madey, Puchalski, Von Holst, Halldin-I, or Dotsuko, or with the Lazer P-Nut, Schutt Ion 4D, or Schutt DNA Pro Plus helmet. Each is analogous art to the claims of the Asserted Patents. All references address the same or similar problem as the Asserted Patents, such as reducing rotational acceleration on the brain during impacts with the head or shearing in response to impacts. *See, e.g.*, Weber, [0002] (disclosing "protective helmets that protect the human head against repetitive impacts so as to significantly reduce the likelihood of both translational and rotational brain injury and concussions"); Kleiven, [0002] (directed to "an improved material/structure that reduces angular/rotational motion or acceleration of the human brain and body caused by oblique impact.

In the material/structure, there is an inner layer and an outer layer and a separation between the inner layer and the outer layer by spikes that are constructed so that they permit displacement of the outer layer relative to the inner layer, hereby reducing the force from an oblique impact."); Hawkins at [0006] (describing "[a] method of absorbing compression forces imparted to a surface by an impacting object in accordance with one exemplary implementation of a present invention includes converting at least some compression forces into shear forces while the object is in contact with the surface and imparting a rotational force to the object while the object is in contact with the surface"); Ferrara 2006 at [0005] (recognizing that currently marketed helmets "generally do not diminish the rotational forces experienced by the brain" and providing a solution of a middle layer that can "resiliently shear with respect to the inner layer in response to a tangential impact to the outer layer"); Piper, [0002] (disclosing "protective headgear intended to reduce angular acceleration of the human brain caused by an impact . . . ."); Piper, [0005] ("Acceleration along an arc is called angular or rotational acceleration."); Puchalski at 12:55-58 (describing relative sliding between shell layers); Copeland at [0022-23] (describing foam members for shock absorption and additional comfort); Madey at [0024] ("[T]he present invention provides a means of diverting and/or absorbing tangential impact energy before that energy is translated to the wearer's head and neck."); Ferrara 2007 at [0086] (describing helmets with cells that "will shear relative to the inner layer 106 in response to tangential components of an impact, absorbing those components as well"); Halldin-II at [0042-43] (describing a helmet with an outer and inner layer, a sliding facilitator, and fixation members for "providing slidability"); Halldin-III at [Abstract] (describing an improved locking device and helmet "for facilitating displacement of the outer layer relatively the inner layer during an oblique impact towards the protective helmet"); Dotsuko at [0006] ("The present invention addresses the problem of providing a technology that enables a helmet to be securely mounted on the head of an occupant and to efficiently absorb both impact energy in a direction perpendicular to the outer surface of the shell of the helmet and impact energy in a direction along the outer surface of the shell of the helmet.").

A POSITA would have found it obvious to combine these elements as a matter of routine implementation, as their combination is a straightforward and predictable combination of known elements according to known methods to yield predictable results, and the above comfort liners/lining layers are ready for improvement through incorporation into any of the above helmets. The known technique of using comfort liners to improve fit, comfort, and heat management would improve the above mentioned helmets in similar ways as those disclosing comfort liners.

As one example, Weber discloses "a 'comfort' liner 123 configured to closely surround the head of the wearer," Weber, [0044-0045], but it does not include additional details regarding such comfort liner. Piper (for example) provides those details, including its materials (e.g., "lower-density, open-cell foam material") and its characteristics ("provides sweat and heat management characteristics"). Piper, [0109]. Similarly, Ferrara 2006 describes how "a compressible (e.g., foam) internal liner 32′ can then be added (step 80) to the multilayer shell 30′. FIG. 6 shows a cross-section of a portion of the shell 30′ and of the internal liner 32′. The internal liner 32′ is attached (e.g., with an adhesive) to an internally facing surface of the inner layer 28′. The shape of the internal liner 32′ conforms to the general shape of the shell 30′ and to the shape of a wearer's head." Ferrara 2006 at [0060]. Similarly, Puchalski states that "padding or cushioning may also be provided along the inside of the shell for increased comfort, better fit and to assist in the absorption of any impact forces." Puchalski at 1:53-55. Copeland also describes how a helmet has inserts "include[ing] a foam member," which is "manufactured from a softer foam material than base 12 for additional comfort." Copeland at [0023]. And Madey describes how a "[h]elmet 40 comprises an inner helmet layer (e.g., an energy-absorbing layer) 41, a helmet retention system (e.g., straps 42 and foam padding inserts, not shown) to affix inner helmet layer 41 to a wearer's head…." Madey at [0025]. A POSITA would have been motivated to modify Weber's helmet to incorporate a more-specific foam comfort liner as described in Piper, Ferrara 2006, Puchalski, Copeland, or Madey to achieve comfort, fit, and heat and sweat management. A POSITA would have found it obvious to combine these elements as a matter of routine implementation, as it is a

straightforward and predictable combination of known elements according to known methods to yield predictable results, and Weber's general comfort liner is ready for improvement through incorporation of Piper's, Ferrara 2006's, Puchalski's, Copeland's, or Madey's liner. This known technique of adding a user comfort layer would improve Weber's helmet in a similar way to Piper, Ferrara 2006, Puchalski, Copeland, or Madey.

Further, a POSITA would have had a reasonable expectation of success in combining the comfort liner/lining layer of Piper, Ferrara 2006, Puchalski, Copeland, or Madey with the helmet of Weber because such comfort liners were a known structure that had been demonstrated to improve safety and comfort, including heat and sweat management. Additionally, Ferrara 2006 expressly provides teachings on how a lining layer could be incorporated into a helmet, Ferrara 2006 at [0060], as does Copeland, Copeland at [0022-23], and a POSITA would have reasonably expected to be able to incorporate a lining layer into Weber in a similar way.

For another example, a POSITA would have been motivated to combine the comfort liner of Piper, Ferrara 2006, Puchalski, Copeland, or Madey with the helmet of Kleiven. Each is analogous art to the claims of the Asserted Patents. As with the claims of the asserted patents, Kleiven addresses the problem of reducing rotational acceleration on the brain during impacts with the head. Kleiven is directed to the field of "a material/structure that protects the head and body in a collision or against other types of impact. Specifically, it relates to an improved material/structure that reduces angular/rotational motion or acceleration of the human brain and body caused by oblique impact." Kleiven, [0002]. Kleiven also addresses that problem in the same way as the claims of the asserted patents, by allowing relative sliding to reduce rotational acceleration on the brain during impacts with the head. Kleiven, [0002] ("In the material/structure, there is an inner layer and an outer layer and a separation between the inner layer and the outer layer by spikes that are constructed so that they permit displacement of the outer layer relative to the inner layer, hereby reducing the force from an oblique impact.").

A POSITA would have been motivated to combine Kleiven's helmet with Piper's, Ferrara 2006's, Puchalski's Copeland's, or Madey's comfort liner for all the reasons described above. Further, Kleiven recognizes that foam on the interior of a helmet can "improve[] the capacity of the headgear to conform to the head." Kleiven, [0014]. This would have motivated a POSITA to look to disclosures of such interiors in helmets, especially such disclosures that solve the same problem. Piper's comfort liner is also positioned under an inner layer similar that disclosed in Kleiven, further motivating a POSITA to combine the two. As discussed above, a POSITA would also have reasonably expected success due to these similarities and for additional reasons: comfort layers/lining layers were standard in helmets, and Piper's, Ferrara 2006's, Puchalski's, Copeland's, or Madey's comfort liner would easily fit into Kleiven's design. A POSITA combining these references would also reasonably expect success because such comfort liners were a known structure that had been demonstrated to improve safety and comfort, including heat and sweat management, including all the reasons described above, and addition of such a foam liner would have been a matter of predictable and routine implementation within the knowledge and skill of a POSITA.

As another example, a POSITA would have been motivated to combine Hawkins' helmet with Piper's, Ferrara 2006's, Puchalski's, Copeland's, or Madey's comfort liner for all the reasons previously described. Further, Hawkins describes a helmet with "machine elements" and matrix material (such as fluids) that can shear and cause relative sliding in response to impact forces may "be stacked so that there will be more than one layer of machine elements." Hawkins at [0050], [0053]; [0048]. Although Hawkins does not expressly describe a foam-based comfort lining/lining layer, but layers are standard across all fields of helmets as discussed above, and a POSITA would have been motivated to incorporate such a comfort liner from Piper, Ferrara 2006, Puchalski, Copeland, or Madey in Hawkins' helmet. Hawkins describes the specifics of its force diversion apparatus in detail across multiple implementations, but it does not provide further detail on other components of a helmet. A POSITA reading Hawkins would have understood that comfort

liners/lining layers to conform to a head are desirable and ubiquitous in helmet design and would thus look to references such as Piper, Ferrara 2006, Puchalski, Copeland, or Madey for teachings on how to incorporate this feature. A POSITA would also have reasonably expected success in incorporating a foam-based comfort liner/lining layer into Hawkins for the same or similar reasons as described above.

As another example, a POSITA would have been motivated to combine Ferrara 2007's helmet with Piper's, Ferrara 2006's, Puchalski's, or Copeland's comfort liner for all the reasons previously described. Ferrara 2007 describes a helmet with "cells" that can "shear relative to the inner layer 106 in response to tangential components of an impact, absorbing those components as well." Ferrara 2007 at [0086]. Ferrara 2007 describes lining layers in various embodiments, *e.g.*, Ferrara 2007 at [0097] (inner components "together form a conformable inner liner"), but it does not expressly describe this feature in all embodiments or specify that the inner liner is foam. A POSITA would thus have been motivated to look to other references such as Piper, Ferrara 2006, Puchalski, or Copeland to identify other implementations of comfort liners and materials to use for such comfort liners. As discussed above, a POSITA would also have reasonably expected success due to these similarities and for additional reasons: comfort layers/lining layers were standard in helmets, and Piper's, Ferrara 2006's, Puchalski's, Copeland's, or Madey's comfort liner would easily fit into Ferrara 2007's design. A POSITA combining these references would also reasonably expect success because such comfort liners were a known structure that had been demonstrated to improve safety and comfort, including heat and sweat management, including all the reasons described above, and addition of such a foam liner would have been a matter of predictable and routine implementation within the knowledge and skill of a POSITA.

As another example, a POSITA would have been motivated to combine Dotsuko's helmet with Piper's, Ferrara 2006's, Puchalski's, or Copeland's comfort liner for all the reasons previously described. Dotsuko describes a helmet with multiple protective layers that can move/slide relative to one another, but it does not expressly discuss a foam comfort liner/liner

layer. As discussed above, foam comfort liners/liner layers were standard across all fields of helmets, including motorcycle/racing helmets which Dotsuko discusses. A POSITA would have been motivated to incorporate such a comfort liner from Piper, Ferrara 2006, Puchalski, Copeland, or Madey in Dotsuko's helmet. A POSITA reading Dotsuko would have understood that comfort liners/lining layers to conform to a head are desirable and ubiquitous in helmet design and would thus look to references such as Piper, Ferrara 2006, Puchalski, Copeland, or Madey for teachings on how to incorporate this feature. A POSITA would also have reasonably expected success in incorporating a foam-based comfort liner/lining layer into Dotsuko for the same or similar reasons as described above.

As another example, a POSITA would have been motivated to combine the Lazer P-Nut, Schutt Ion 4d, or Schutt DNA Pro Plus helmets with Piper's, Ferrara 2006's, Puchalski's, Copeland's, or Madey's comfort liner for all the reasons previously described. A POSITA would also have been motivated to combine the Lazer P-Nut, Schutt Ion 4D, or Schutt DNA Pro Plus helmets with the foam liners disclosed in the POC Trabec Race, POC Receptor Backcountry MIPS, POC Cortex DH, Xenith X1, the TSG Kraken, Burton RED Hi-Fi, Lazer Superskin, and Back on Track EQ2 helmets, for the reasons described, including that a POSITA would have known these foam-based comfort liners are a common and desirable helmet design element. A POSITA would have had a reasonable expectation of success because comfort liners of this type were a known structure for improving safety and comfort and their inclusion would have been a predictable matter of routine implementation for a POSITA.

ii) <u>Incorporating mechanical connections into sliding layers would have been an obvious feature of helmets allowing relative sliding and reducing rotational acceleration of the brain</u>

To the extent Plaintiff contends that the prior art identified as anticipating the claims does not disclose the connection of layers, such as via mechanical connections (e.g., trusses or elastomeric connectors), to allow relative displacement/sliding a POSITA would have found

obvious the modification of a helmet allowing relative sliding and reducing rotational acceleration of the brain to include such a connection. A POSITA would have been motivated to and found it obvious to physically connect layers with mechanical connections because doing so constituted utilizing a known structure to further reduce rotational acceleration of the brain during impact, to yield predictable results, and as a way of improving the structural integrity, and overall safety, of the helmet. Utilizing a plurality of mechanical connections between layers configured to move/slide relative to one another was well known before 2011. *See, e.g.*, Halldin-II; Weber; Kleiven; Ferrara 2006; Ferrara 2007; Madey; Hawkins; Dotsuko; Halldin-III.

Further, a POSITA would have been motivated and found it obvious to incorporate mechanical connections between layers configured to move/slide relative to one another because there were a finite number of predictably successful solutions to the problem of connecting such layers and permitting relative sliding between them in the manner the Asserted Patents discuss. For example, a POSITA would have the choice of providing mechanical connection element(s) at the periphery, e.g., at single points at the exterior of the helmet, or at multiple internal points, including within the sliding layers. A POSITA would have been motivated to incorporate multiple of such internal attachment points because they would protect against failure of one or more attachment points and also for additional energy absorption and dissipation throughout the helmet as force is imparted on the connecting members.

Further, a POSITA would have had a reasonable expectation of successfully incorporating such internal fixations as described in the above references in a layered helmet. As discussed above, including mechanical connectors between sliding layers was well known in the field of helmet design. A POSITA would have had a reasonable expectation of successfully including additional internal physical fixation in a helmet because it was a predictable matter of routine design and implementation, including, for example, through use of typically used adhesives or attachment techniques.

For example, Halldin-II teaches a helmet with an outer shell connected to an attachment device by "fixation members." Halldin-II, [0013]. Halldin-II teaches multiple types of fixation members, including members 4a-4d that "absorb energy by deforming in an elastic, semi-elastic or plastic way." Halldin-II, [0043], Fig. 3.

Each of Halldin-II's fixation members connects layers of the helmet while (1) absorbing energy and (2) allowing relative sliding between the layers. Figures 2 and 3 teach fixation members 4a and 4b. *Id.*, [0047] (Figure 3, with fixation members, allows "energy absorbing layer 2 to slide in relation to the attachment device 3" and "[t]he fixation absorbs the rotational forces by deforming elastically or semi-elastically), Figs. 2-3 (outer layer 2 connected at portion 9 and inner attachment device 3 connected at portion 8):

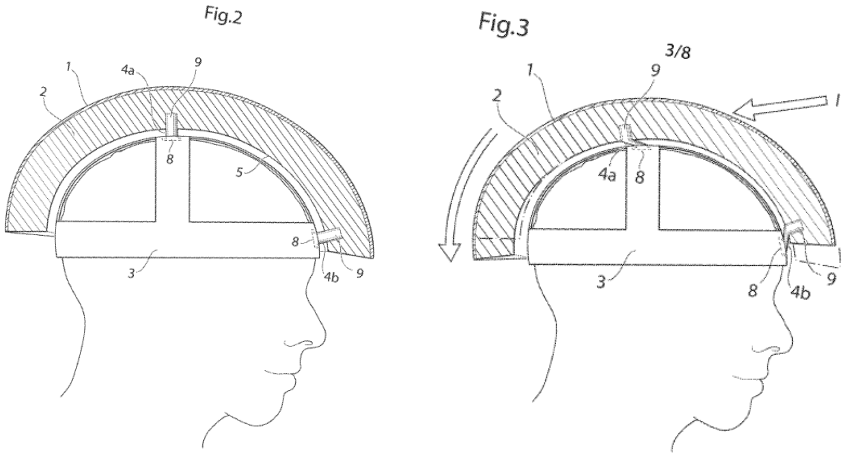

Halldin-II, Figs. 2, 3.

A POSITA would have been motivated to modify, for example, Von Holst to incorporate Halldin-II's fixation members. Von Holst and Halldin-II (which share a common inventor) are analogous to the Asserted Claims: both are directed to the same field of endeavor (helmet safety design), and both address the same problem of improved helmet sliding mechanisms. Von Holst describes layers connected through transformer layers and a connecting member, and the later-

filed Halldin-II teaches additional ways to connect layers while maintaining desired sliding to address impact forces. A POSITA would have been motivated to include Halldin-II's fixation connections, which not only connect layers but additionally "absorb energy" by "deforming," Halldin-II, [0043], which would supplement the energy absorption achieved by Von Holst's sliding layers 4.

Furthermore, a POSITA would have been motivated to use Halldin-II's internal connections (i.e., members 4a-d) instead of or in addition to Von Holst's peripheral connecting member 5. Halldin-II teaches that A POSITA would have known that fixation on the periphery and internal fixation are alternatives that could be used separately or together. *See* Halldin-II, [0057], Fig. 11, [0064] (discussing combination of "master fixation member" and "additional fixation members"). A POSITA would have been motivated to improve Von Holst by adding internal fixation connections to increase the degree of connection throughout the helmet and provide additional mechanisms to absorb energy. A POSITA would have found it obvious to combine these elements as a matter of routine implementation, as their combination is a straightforward and predictable combination of known elements according to known methods to yield predictable results. Von Holst's helmet with sliding layers is ready to be improved by incorporating a layer of internal fixation members that absorbs additional energy. The known technique from Halldin-II of using fixation members to create a connecting layer and absorb energy would improve Von Holst's helmet in a similar way to Halldin-II's helmet.

A POSITA would have a reasonable expectation of success in modifying Von Holst as described. It is easy to apply aspects of Halldin-II's helmet design to Von Holst. Where Von Holst describes sliding layers, Halldin-II describes a "sliding facilitator 5 [Fig. 2] [that] may be a low friction material," which "is provided on outside of the attachment device 3 facing the energy absorbing layer 2" or, alternatively, "on the inside of the energy absorbing layer 2." Halldin-II, [0044]. Halldin-II emphasizes that its fixation members are not usable only with the specific attachment device embodiments in its specification, but instead would have been readily adaptable

to other designs, like Von Holst's helmets, as a matter of routine implementation within the skill of a POSITA: "In other embodiments the attachment device 3 could be … any other design functioning as an attachment device for mounting on a wearer's head." Halldin-II, [0050]. For example, Halldin-II teaches fixation members attached to the outer energy absorbing layer via an "adhesive." Halldin-II, [0052]. Thus, a POSITA would have reasonably expected to be able to implement Halldin-II's fixation members to connect Von Holst's intermediate shell layer to the outer shell.

As another example, a POSITA would have been motivated to combine the helmet of Halldin-I with the connection of layers by fixation members of Halldin-II with a reasonable expectation of success. In addition to the reasons discussed above with Von Holst, both references address the same problem of reducing rotational acceleration on the brain during impacts with the head. Halldin-I, 3:7-11; Halldin-II, [0005], [0047]. Both references also disclose the same solution to that problem: helmets allowing relative sliding to reduce rotational acceleration on the brain during impacts with the head. Halldin-I, 1:5-6, 2:34-35 (disclosing "a protective helmet with an outer shell and an inner shell" such that "the outer shell of the helmet can be displaced relative to the inner shell."); Halldin-II, [0001] (disclosing "a helmet comprising an energy absorbing layer, with or without any outer shell, and a sliding facilitator being provided inside of the energy absorbing layer."). Moreover, both references name the same inventor.

Additionally, Halldin-I describes that its connections are limited to being placed peripherally "where the probability of an application of an outer force is low." Halldin-I, [00014]. Later-filed Halldin-II addresses this limitation by allowing connection at numerous points within the helmet.

Halldin-II's fixation members provide an optimized connection mechanism over Halldin-I, removing the need for flaps outside of the helmet and allowing more points of connection throughout the helmet. For example, Halldin-I states that "[i]n order to further fix the intermediate layer into place it may also be attached to both of the movable layers at a peripheral edge of the

intermediate layer. Preferably, the attachment is made at a part of the structure where the probability of an application of an outer force is low." Halldin-I [00014]. Halldin-I thus poses a design limitation, wherein the connection mechanisms must be placed in specific points, such as the periphery, and was ready for improvement. Halldin-II, which was filed later with a common inventor, recognizes that the connection ***could*** be at the periphery, *see* Halldin-II [0057] ("Fig. 11 shows an embodiment in which the attachment device 3 is fixated to the energy absorbing layer 2 ***at the periphery*** thereof by means of a membrane or sealing foam 24, which could be elastic or adapted for plastic deformation."), but only as one of several alternatives, most of which provide connection mechanisms throughout the helmet. A POSITA would have found it obvious to combine these elements as a matter of routine implementation, as their combination is a straightforward and predictable combination of known elements according to known methods to yield predictable results, and Halldin-I's helmet with sliding layers is ready for improvement through incorporation of a layer of internal fixation members that additionally absorbs energy. The known technique of using fixation members from Halldin-II to create a connecting layer and absorb energy would improve Halldin-I's helmet in a similar way to Halldin-II.

A POSITA would also have had a reasonable expectation of success in modifying Halldin-I as described for similar reasons as with Von Holst. In addition, it is easy to apply aspects of Halldin-II's helmet design to Halldin-I. Halldin-II describes a "sliding facilitator 5 [Fig. 2] [that] may be a low friction material," which "is provided on outside of the attachment device 3 facing the energy absorbing layer 2" or, alternatively, "on the inside of the energy absorbing layer 2." Halldin-II [0044]. Halldin-II's low-friction layer also has certain similarities with that of Halldin-I, including having a fiber structure. *Compare* Halldin-II [0040] ("If it furthermore conceivable that the sliding is enabled by the structure of the material, for example by the material having a fiber structure such that the fibers slide against each other.") *with* Halldin-I [0004] ("The low friction material comprises fibers. By using fibers as a friction decreasing material the friction between the layers can be decreased."). Halldin-II also teaches multiple ways in which its various

embodiments of fixation members could be implemented to connect Halldin-I's intermediate shell layer to the outer shell via the sliding layer. *See, e.g.*, Halldin-II [0042-43], [0052-56]. Halldin-II also emphasizes that its fixating members are not usable only with the specific attachment device embodiments in the specification: "In other embodiments the attachment device 3 could be … any other design functioning as an attachment device for mounting on a wearer's head."). Thus, a POSITA would have reasonably expected to be able to readily implement Halldin-II's fixation members to connect through Halldin-I's sliding layer and connect Halldin-I's intermediate shell layer to the outer shell (and or to the inner shell).

Additionally, a POSITA would not have been limited to the fixation members of Halldin-II, but would have found other fixation members obvious as well. A POSITA could utilize the teachings of Halldin-II to identify alternative connection mechanism(s) that would have provided mechanical connections for stability while also absorbing energy via deforming and facilitating sliding. For example, A POSITA would have similarly been motivated to modify Von Holst or Halldin-I by incorporating mechanical connection elements of Ferrara 2006 or Dotsuko. Each reference describes physical connections similar to Halldin-II. For example, Ferrara 2006 discloses protective headgear with "an outer layer 20′, an inner layer 28′", and a middle layer comprising a plurality of independent compressible members 50′ and optionally fluid such as liquid or air in interstitial region 52′ disposed between the inner and outer layers 28′, 20′. Ferrara 2006, [0053].

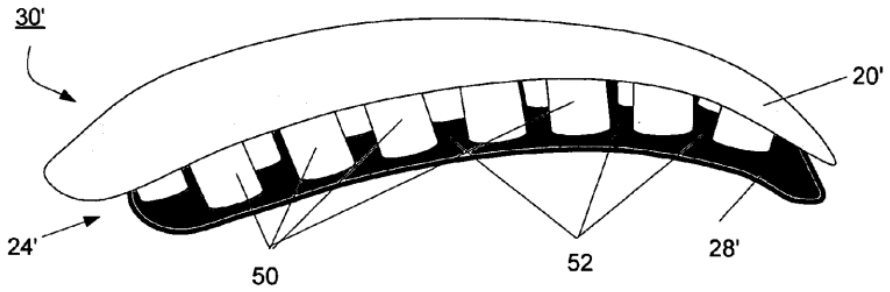

FIG. 4

Ferrara 2006, FIG. 4.

Ferrara 2006's members 50 "compress or shear independently" and "have a resilient, compressible solid or foam construction." Ferrara 2006, [0053]. This connection via members "enables the outer layer to move during impact independently of the inner layer in a scalp-like fashion." Ferrara 2006, [0056]; *see also id.*, [0032] ("respond to an impact by…rotating by the outer layer and the energy-absorbing layer with respect to the inner layer.").

Similarly, Halldin-III (which also shares a common inventor with Von Holst and Halldin-I) discloses a locking device for use in a helmet with sliding layers such as that described in EP-A1-1246548 (the European counterpart to Von Holst). Halldin-III at [0012-13]. The locking device has a "lower portion of the layer-guiding member 10 [that] can be elastic in its longitudinal direction L and in the direction of propagation plane P of the inner layer and the outer layer 4, 6."

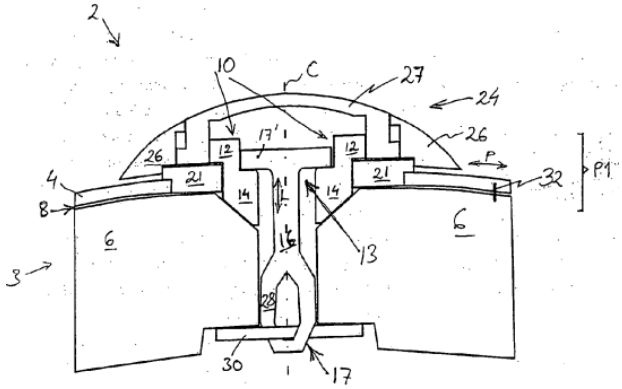

FIG. 1A

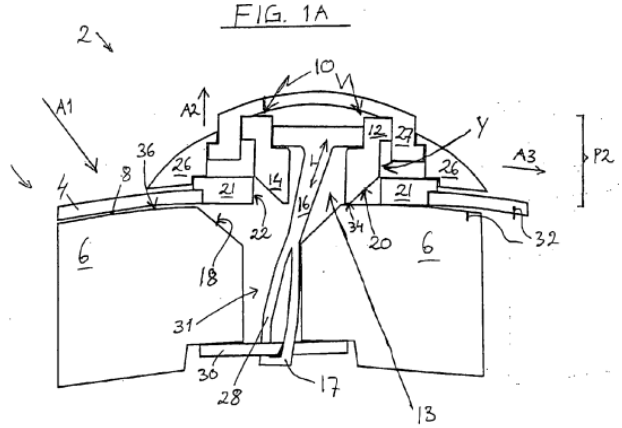

FIG. 1B

Halldin-III at [0021], Figs. 1A-B.

Similarly, Dotsuko discloses a helmet with an inner liner 50 connected to liner 40 and outer shell 20 with liner 30 comprising a plurality of elastic straps and an elastic body disposed between the inner and outer layers.

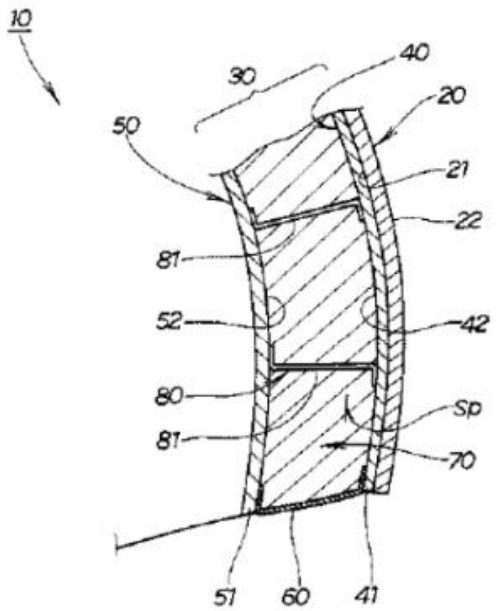

Dotsuko, [0013], [0017].

A POSITA would have been motivated to modify Von Holst's and/or Halldin-I's sliding layers to additionally include Ferrara 2006's or Dotsuko's compressible members and elastic straps with a reasonable expectation of success for similar reasons as with Halldin-II. Additionally, Ferrara 2006's compressible members would readily fit into Von Holst's and Halldin-I's sliding layer: Ferrara 2006's members can vary in lengths, and "the outer layer 20′ and inner layer 28′ approach and may touch each other so that any gap between the layers 20′, 28′ either is imperceptible or does not exist." Ferrara 2006 at [0056]. And further with respect to Von Holst, given that Ferrara 2006 further utilizes fluids, similar to Von Holst, a POSITA would have been motivated to incorporate members similar to those used in Ferrara 2006 to provide additional connection points throughout the sliding layer for stability and energy absorption while still "enabl[ing] the outer layer to move during impact independently of the inner layer in a scalp-like fashion." Ferrara 2006 at [0056].

Similarly, Halldin-III's locking device is expressly described as fitting within a helmet similar to Von Holst, and which is has similar key features as Halldin-I's helmet (e.g., and outer and inner layer with a sliding layer that may include, for example, "[t]eflon, oil, air or the similar.") Halldin-III recognizes various advantages of its device by which a POSITA may be motivated to incorporate it into Von Holst or Halldin-I, including a design where "the energy-absorbing properties of the protective helmet only are activated when the helmet is subjected to oblique impacts that exceed a certain power" and one where it is easier to tell "if a displacement of the layers has taken place and the energy-absorbing function has been released, whereby the helmet is consumed" and must be replaced. Halldin-III at [0007-8]. A POSITA would thus have been motivated to incorporate Halldin-III's locking device into either Von Holst or Halldin-I, and they would have had a reasonable expectation of successfully doing so for similar reasons as described above.

Similarly, Dotsuko describes an additional connection mechanism via "multiple straps 81 … made of an elastic material such as rubber. As these strap 81 [] have certain elongation properties, they allow a certain degree of relative rotation of the shell 20 and the outer liner 40 with respect to the inner liner 50, while preventing excessive relative rotation beyond this range." Dotsuko at [0017]. Dotsuko's elastic straps thus perform a similar function as Von Holst's and Halldin-I's periphery connecting members, which counteract mutual displacement among the sliding layers and deform to absorb energy, but provides multiple points over which energy may be absorbed via deformation. A POSITA would thus have been motivated to incorporate Dotsuko's elastic straps into either Von Holst or Halldin, and they would have a reasonable expectation of success in doing so for similar reasons as described above.

As another example, a POSITA would have been motivated to modify the energy absorbing layers of the Schutt Ion 4D helmet to include sliding layers operable to absorb rotational and shear forces as disclosed in the TSG Kraken and POC Trabec. The Schutt Ion 4D is designed to absorb energy by flexing. G. Alston Rush et al., *Modified Drop Tower Impact Tests For American*

Football Helmets, J. Visualized Experiments (120):53929 (Feb. 19, 2017), https://pmc.ncbi.nlm.nih.gov/articles/PMC5407596/ (RVST00002711-RVST00002733). The POC Trabec and TSG Kraken are designed to reduce rotational force to the brain through a liner designed to slip on impact. Bicycle Helmet Safety Institute, *Bicycle Helmets for the 2010 Season*, Helmets.org (Feb. 5, 2010), https://web.archive.org/web/20100205103230/http:/www.helmets.org:80/ helmet10.htm (RVST00001316-RVST00001411). Thus, a POSITA would have been motivated to improve the Schutt Ion 4D's reduction of impact forces by including the slidable layers in the POC Trabec and TSG Kraken in order to ensure the helmet could absorb rotational and shear forces.

A POSITA would have a reasonable expectation of success in modifying the Schutt Ion 4D helmet to include slidable layers because it already includes an intermediate flexible layer that allows movement to reduce impact forces.

iii) Using different types of materials for helmet layers to create shell layers would have been an obvious feature of helmets to reduce forces on the head and brain and provide safety

To the extent Plaintiff contends that the prior art identified as anticipating the claims does not disclose a first, second, or third "shell layer," it would have been obvious to use shell layers. At least Weber, Von Holst, Halldin-I, Halldin-II, Halldin-III, Kleiven, Hawkins, Ferrara 2006, Ferrara 2007, Dotsuko, Larry, Madey, Piper, Nichols, Puchalski, the POC Trabec Race, the POC Receptor Backcountry MIPS, the POC Cortex DH, the Schutt Ion 4D Helmet, the Schutt DNA Pro Plus, the TSG Kraken, and the Burton RED Hi-Fi- Helmet all disclose two or more distinct protective layers that move/slide relative to one another in the manner the patent discusses. *See, e.g.*, '561 patent at 11:1-10 (discussing that outer, middle, and inner "shells" "may vary in weight and strength," and "may" have certain characteristics); *id.* at 7:55-67 (describing materials for shell layers "may" include "plastics, resins, metal, composites," as well as other materials, i.e., "etc"). Additionally, Von Holst expressly describes each of its protective layers as "shells." *See, e.g.*,

Von Holst at 6:2-12. Similarly, Nichols describes a helmet with three shell layers. Nichols at Fig. 6 (depicting shells 32 and 31 as well as a third shell in the form of helmet 12); *id.* at cl. 1 ("protective headgear adapted to fit over a hard shell football helmet…."). To the extent Plaintiff contends that the claimed "shell layer" requires a layer made of a particular material or shape to prevent injury and/or absorb energy, a POSITA would have been motivated to modify Weber, Von Holst, Halldin-I, Halldin-II, Halldin-III, Kleiven, Hawkins, Ferrara 2006, Ferrara 2007, Dotsuko, Larry, Madey, Piper, or Puchalski to include any material and/or shape to have the helmets' layers be "shell layers" based on Nichols or Von Holst. A POSITA would have found it obvious to combine these elements as a matter of routine implementation, as it is a straightforward and predictable combination of known elements according to known methods to yield predictable results, and the above-mentioned helmets' layers are ready for improvement through incorporation of "shells" as described in Von Holst, Nichols, or the state of the art to reduce the forces on the head and brain, including penetrating forces, and to provide safety. Design modifications often require tradeoffs and material selection for hardness, shape, and the ability to absorb/dissipate energy from an impact would have been within a POSITA's skill set as of the priority date. This known technique of adding shells would improve the above-mentioned helmets in a similar way to Von Holst, Nichols, or the state of the art.

A POSITA would further have had a reasonable expectation of successfully incorporating such components into one of the above-mentioned helmets. Incorporating additional or alternate materials into a layer or changing the shape of a layer was a design choice and selecting the appropriate materials to make an inner, middle, and outer shell in a helmet was a predictable matter of routine implementation for a POSITA.

4. <u>The '536 patent</u>

Each of the asserted claims is invalid under 35 U.S.C. § 103 because it would have been obvious to one of ordinary skill in the art at the time of the invention in light of one or more prior art references and the understanding of one of ordinary skill in the art. In accordance with the

agreed schedule, prior art references rendering the asserted claims of the ’536 patent obvious are discussed below and included in claim chart Exhibits C listed in the chart above. Further reasons to combine the references identified include the nature of the problem being solved, the express, implied and inherent teachings of the prior art, the knowledge of persons of ordinary skill in the art, that such combinations would have yielded predictable results, and such combinations would have represented known alternatives to a person of ordinary skill in the art.

a) Obviousness Combinations

The accompanying charts identify how each prior art reference discloses the limitations of the asserted claims on a limitation-by-limitation basis at least under Plaintiff’s apparent infringement theories and/or claim interpretations, and select combinations are identified below. If Plaintiff argues that any particular prior art reference lacks any feature for which no combining references are provided in the relevant chart, a person of ordinary skill in the art as of any priority date for the ’536 patent would at a minimum have been motivated to modify the reference to include the allegedly missing feature, or to combine it with other references that include that feature, as discussed below. The obviousness combinations are listed below (and it should be understood that each listed combination can also include the knowledge of a person of ordinary skill in the art):

’536 Patent Claims are Obvious under 35 U.S.C. § 103 **Claim, Basis, References**
• Claim 20 is obvious over Weber in view of Piper • Claim 20 is obvious over Weber in view of Ferrara 2006 • Claim 20 is obvious over Weber in view of Puchalski • Claim 20 is obvious over Weber in view of Copeland • Claim 20 is obvious over Weber in view of Madey • Claims 1, 7-10, and 16-20 are obvious over Von Holst in view of any one of Halldin-II, Ferrara 2006, Ferrara 2007, Kleiven, Weber, Hawkins, Dotsuko, Madey, and Halldin-III. • Claims 1, 7-10, and 16-20 are obvious over Von Holst in view of any one of Halldin-II, Ferrara 2006, Ferrara 2007, Kleiven, Weber, Hawkins, Dotsuko, Madey, and Halldin-III, and further in view of any one of Piper, Ferrara 2006, Puchalski, Copeland, or Madey. • Claims 1, 7-10, and 16-20 are obvious over Halldin-I in view of any one of Halldin-II, Ferrara 2006, Ferrara 2007, Kleiven, Weber, Hawkins, Dotsuko, Madey, and Halldin-III.

’536 Patent Claims are Obvious under 35 U.S.C. § 103 Claim, Basis, References
• Claims 1, 7-10, and 16-20 are obvious over Halldin-I in view of any one of Halldin-II, Ferrara 2006, Ferrara 2007, Kleiven, Weber, Hawkins, Dotsuko, Madey, and Halldin-III, and further in view of any one of Piper, Ferrara 2006, Puchalski, Copeland, or Madey. • Claims 10, 16-17, and 19-20 are obvious over Kleiven in view of Piper • Claims 10, 16-17, and 19-20 are obvious over Kleiven in view of Ferrara 2006 • Claims 10, 16-17, and 19-20 are obvious over Kleiven in view of Puchalski • Claims 10, 16-17, and 19-20 are obvious over Kleiven in view of Copeland • Claims 10, 16-17, and 19-20 are obvious over Kleiven in view of Madey • Claims 10, 16-17, and 19-20 are obvious over Hawkins in view of Piper • Claims 10, 16-17, and 19-20 are obvious over Hawkins in view of Ferrara 2006 • Claims 10, 16-17, and 19-20 are obvious over Hawkins in view of Puchalski • Claims 10, 16-17, and 19-20 are obvious over Hawkins in view of Copeland • Claims 10, 16-17, and 19-20 are obvious over Hawkins in view of Madey • Claims 9, 10, 16-20 are obvious over Ferrara 2007 in view of Piper • Claims 9, 10, 16- 20 are obvious over Ferrara 2007 in view of Ferrara 2006 • Claims 9, 10, 16-20 are obvious over Ferrara 2007 in view of Puchalski • Claims 9, 10, 16-20 are obvious over Ferrara 2007 in view of Copeland • Claims 9, 10, 16-20 are obvious over Ferrara 2007 in view of Madey • Claims 9, 10, 16-20 are obvious over Larry in view of any one of Piper, Ferrara 2006, Puchalski, Copeland, Madey. • Claims 10 and 16-17 are obvious over Dotsuko in view of Piper • Claims 10 and 16-17 are obvious over Dotsuko in view of Ferrara 2006 • Claims 10 and 16-17 are obvious over Dotsuko in view of Puchalski • Claims 10 and 16-17 are obvious over Dotsuko in view of Copeland • Claims 10 and 16-17 are obvious over Dotsuko in view of Madey • Claims 10 and 16-17 are obvious over Halldin-III in view of Piper • Claims 10 and 16-17 are obvious over Halldin-III in view of Ferrara 2006 • Claims 10 and 16-17 are obvious over Halldin-III in view of Puchalski • Claims 10 and 16-17 are obvious over Halldin-III in view of Copeland • Claims 10 and 16-17 are obvious over Halldin-III in view of Madey • Claims 9, 10, 19, and 20 are obvious over the Schutt DNA Pro Plus in view of any one of Piper, Ferrara 2006, Puchalski, Copeland, Madey, POC Trabec Race, POC Receptor Backcountry MIPS, POC Cortex DH, Xenith X1, the TSG Kraken, Burton RED Hi-Fi, Lazer Superskin, and Back on Track EQ2 helmets • Claims 9, 10, 19, and 20 are obvious over the Schutt Ion 4D in view of any one of Piper, Ferrara 2006, Puchalski, Copeland, Madey, POC Trabec Race, POC Receptor Backcountry MIPS, POC Cortex DH, Xenith X1, the TSG Kraken, Burton RED Hi-Fi, Lazer Superskin, and Back on Track EQ2 helmets • Claims 9, 10, 19, and 20 are obvious over the Lazer P-Nut in view of any one of Piper, Ferrara 2006, Puchalski, Copeland, Madey, POC Trabec Race, POC Receptor Backcountry

’536 Patent Claims are Obvious under 35 U.S.C. § 103 Claim, Basis, References
MIPS, POC Cortex DH, Xenith X1, the TSG Kraken, Burton RED Hi-Fi, Lazer Superskin, and Back on Track EQ2 • Claims 9, 10, 19, and 20 are obvious over Kleiven in view of any one of Piper, POC Trabec Race, POC Receptor Backcountry MIPS, POC Cortex DH, Xenith X1, the TSG Kraken, Burton RED Hi-Fi, Lazer Superskin, and Back on Track EQ2 helmets • Claims 1, 7-10, and 16-20 are obvious over the Schutt Ion 4D in view of any one of the TSG Kraken and POC Trabec • Claims 1, 7-10, and 16-19 are obvious in view of Weber • Claims 1, 7-10, and 16-20 are obvious in view of Von Holst • Claims 1, 7-10, and 16-20 are obvious in view of Halldin-I. • Claims 1, 7-8, and 18 are obvious in view of Kleiven • Claims 1, 7-8, and 18 are obvious in view of Hawkins • Claims 10, 16, and 17 are obvious in view of Ferrara 2006 • Claims 10, 16, and 17 are obvious in view of Piper • Claims 10, 16, and 17 are obvious in view of Madey • Claims 10, 16, and 17 are obvious in view of Nichols • Claims 1, 7-8, and 18 are obvious in view of Larry • Claims 1, 7-8, 10, 16-19 are obvious in view of Ferrara 2007 • Claims 10, 16 and 17 are obvious in view of Puchalski • Claims 10, 16, and 17 are obvious in view of the Back on Track EQ2 Helmet • Claims 10, 16, and 17 are obvious in view of the Xenith X1 Helmet • Claims 1, 7-10, 16-19 are obvious in view of the Schutt Ion 4D Helmet • Claims 1, 7-10, 16-19 are obvious in view of the Schutt Ion DNA Pro Plus • Claims 10, 16, and 17 are obvious in view of the POC Trabec Race • Claims 10, 16, and 17 are obvious in view of the POC Receptor Backcountry MIPS Helmet • Claims 10, 16, and 17 are obvious in view of the POC Cortex DH • Claims 1, 7-10, 16-20 are obvious in view of the TSG Kraken • Claims 10, 16, and 17 are obvious in view of the Lazer P-Nut MIPS Helmet • Claims 1, 7-10, 16-20 are obvious in view of the Burton RED HiFi Helmet

b) Reasons to Modify, Extend, or Combine Claimed Concepts

As set forth in Sections IV and V and claim chart Exhibits C listed in the above chart, the prior art references and products demonstrate that the concepts described in the ’536 patent were well known and in public use as of the earliest possible priority date of the ’536 patent. The ’536 patent does not introduce any new concepts for helmets allowing for relative sliding between layers, nor does it combine these known concepts in any inventive or non-obvious manner. The

disclosure of the references and reasons for modifying and/or combining such references include those identified in the General Comments set out in Section IV above, the analysis below, and the evidence cited in claim chart Exhibits C, which are incorporated by reference into this section as well as the following:

i) A lining layer that conforms to the human head and/or is made of foam would have been an obvious feature of helmets allowing relative sliding and reducing rotational acceleration of the brain

To the extent Plaintiff contends that the prior art identified as anticipating claims 9, 19, and 20 does not disclose a lining layer that conforms to the human head and is made of foam, a POSITA would have found obvious the modification of a helmet allowing relative sliding to include such a lining layer.

A POSITA would have been motivated to modify any helmet to include a foam-based comfort liner with a reasonable expectation of success. As discussed in Section V, foam comfort liners are standard in most modern helmets. *See, e.g.*, Newman at 47 ("Modern (i.e. post 1975) cycling helmets have typically used small polyester foam pads that can be strategically placed inside the helmet by the wearer to accommodate different head shapes and sizes."); Bosch, 2 ("The purpose of the comfort padding liner is to increase the wearing comfort of the helmet and to provide a good fit on the head. It consists of low-density, flexible, open-celled, polyurethane or PVC foams and is often faced with a cloth layer."); Weber at [0045] (helmet contains "a 'comfort' liner 123 configured to closely surround the head of the wearer"), [0036], [0050]; Piper at [0109] (disclosing a "comfort liner 212 next to the head 200 of the wearer" that is, e.g., "lower density, open-cell foam material that easily conforms to the head"); Von Holst at 4:26-29 (describing an inner shell 3 with softer inner layer 3' "made of … polyurethane foam"); Puchalski at 1:52-55 (a "padding or cushioning may also be provided along the inside of the shell for increased comfort, better fit and to assist in the absorption of any impact forces"), cl. 9; Ferrara 2006 (US2006/0059606) at [0060] ("[I]n FIG. 6, a compressible (e.g., foam) internal liner 32′ can then

be added (step 80) to the multilayer shell 30′….The shape of the internal liner 32′ conforms to the general shape of the shell 30′ and to the shape of a wearer's head."); Copeland (US2006/0070170) at [0022-23] (describing "[a] shock absorber insert 18 [] received in … recesses" that "includes a foam member 19"), cl. 17, Fig. 2); Ferrara 2007 (US2007/0190293) at [0101] ("Therefore, the bellows capsules as a whole provide a relatively soft and comfortable inner liner next to the wearer's head."); Madey at [0025] ("Helmet 40 comprises an inner helmet layer (e.g., an energy-absorbing layer) 41, a helmet retention system (e.g., straps 42 and foam padding inserts, not shown) to affix inner helmet layer 41 to a wearer's head…."); POC Trabec Race, POC Receptor Backcountry MIPS, POC Cortex DH, Xenith X1, the TSG Kraken, Burton RED Hi-Fi, Lazer Superskin, and Back on Track EQ2.

A POSITA would have understood that user comfort is a critical feature for helmet uptake and usability and that comfort padding/liners that conform to the human head provide such comfort. Thus, a POSITA viewing a disclosure that does not expressly describe a comfort padding/lining layer would have been motivated and would have found it obvious to look to other references to incorporate this feature. The reasons for this were well established in the art. For example, comfort liners were described as providing general comfort and also improving fit for users. Weber at [0045] (describing "a 'comfort' liner 123 configured to closely surround the head of the wearer"); *see also id.* at [0036], [0050]. In addition, foam-based comfort liners were understood to "easily comform[] to the head" and "provide[] sweat and heat management characteristics." Piper at [0109]. A POSITA would have been motivated to incorporate a foam-based comfort liner such as that described in Piper into other helmets to provide comfort, improve fit, and achieve heat and sweat management. A POSITA would have understood that reducing heat by using a foam comfort liner would also enhance helmet safety by: (1) reducing risks of heat stress for the user and (2) increasing helmet use on hot days, when users might otherwise find it too uncomfortable to wear.

A POSITA would further have been motivated and found it obvious to include a lining layer that conforms to the human head and/or is made of foam because there were a finite number of predictably successful solutions to the problem of creating a flexible, comfortable, lining layer that connects to the head while reducing heat and managing sweat, of which comfort liners, and specifically foam comfort liners, were one. Using foam-based lining layers in helmets would have constituted utilizing a known structure in a known way to yield predictable results. As discussed above, foam-based comfort liners/lining layers were standard in modern helmets, and indeed comfort liners/lining layers in general were standard in helmet design before 2011. A POSITA would have a finite number of choices of whether to include a lining layer at all (either including one or not including one) as well as what material to use (foam-based materials covered in fabric are a near universal material), and implementing a foam-based lining layer would have yielded predictable results of improved comfort and safety.

A POSITA would have had a reasonable expectation of success of incorporating a foam-based comfort liner/lining layer in a helmet of any of the references identified herein. As discussed above, foam-based liners were standard in modern helmets, and a POSITA would thus already know how to incorporate such liners into other helmets. Indeed, Ferrara 2006 teaches how a POSITA might incorporate such a helmet. Ferrara 2006 at [0060] (describing FIG. 6) ("The internal liner 32′ is attached (e.g., with an adhesive) to an internally facing surface of the inner layer 28′. The shape of the internal liner 32′ conforms to the general shape of the shell 30′ and to the shape of a wearer's head."). A POSITA would also have understood, as a matter of routine implementation, that there were also alternative ways to incorporate such comfort liners/lining layers, such as with various fixations (e.g., snap fixation) or by incorporating them into recesses within an inner layer (*see, e.g.*, Copeland at [0022-23]).

For example, a POSITA would have been motivated to combine the comfort liner/lining layer of Piper, Ferrara 2006, Ferrara 2007, Puchalski, Copeland, or Madey, or of the POC Trabec Race, POC Receptor Backcountry MIPS, POC Cortex DH, Xenith X1, the TSG Kraken, Burton

RED Hi-Fi, Lazer Superskin, and Back on Track EQ2 helmets with the helmets of at least, e.g., Weber, Kleiven, Hawkins, Ferrara 2007, Halldin-II, Halldin-III, Madey, Puchalski, Von Holst, Halldin-I, or Dotsuko, or with the Lazer P-Nut, Schutt Ion 4D, or Schutt DNA Pro Plus helmet. Each is analogous art to the claims of the Asserted Patents. All references address the same or similar problem as the Asserted Patents, such as reducing rotational acceleration on the brain during impacts with the head or shearing in response to impacts. *See, e.g.*, Weber, [0002] (disclosing "protective helmets that protect the human head against repetitive impacts so as to significantly reduce the likelihood of both translational and rotational brain injury and concussions"); Kleiven, [0002] (directed to "an improved material/structure that reduces angular/rotational motion or acceleration of the human brain and body caused by oblique impact. In the material/structure, there is an inner layer and an outer layer and a separation between the inner layer and the outer layer by spikes that are constructed so that they permit displacement of the outer layer relative to the inner layer, hereby reducing the force from an oblique impact."); Hawkins at [0006] (describing "[a] method of absorbing compression forces imparted to a surface by an impacting object in accordance with one exemplary implementation of a present invention includes converting at least some compression forces into shear forces while the object is in contact with the surface and imparting a rotational force to the object while the object is in contact with the surface"); Ferrara 2006 at [0005] (recognizing that currently marketed helmets "generally do not diminish the rotational forces experienced by the brain" and providing a solution of a middle layer that can "resiliently shear with respect to the inner layer in response to a tangential impact to the outer layer"); Piper, [0002] (disclosing "protective headgear intended to reduce angular acceleration of the human brain caused by an impact . . . ."); Piper, [0005] ("Acceleration along an arc is called angular or rotational acceleration."); Puchalski at 12:55-58 (describing relative sliding between shell layers); Copeland at [0022-23] (describing foam members for shock absorption and additional comfort); Madey at [0024] ("[T]he present invention provides a means of diverting and/or absorbing tangential impact energy before that energy is translated to the

wearer's head and neck."); Ferrara 2007 at [0086] (describing helmets with cells that "will shear relative to the inner layer 106 in response to tangential components of an impact, absorbing those components as well"); Halldin-II at [0042-43] (describing a helmet with an outer and inner layer, a sliding facilitator, and fixation members for "providing slidability"); Halldin-III at [Abstract] (describing an improved locking device and helmet "for facilitating displacement of the outer layer relatively the inner layer during an oblique impact towards the protective helmet"); Dotsuko at [0006] ("The present invention addresses the problem of providing a technology that enables a helmet to be securely mounted on the head of an occupant and to efficiently absorb both impact energy in a direction perpendicular to the outer surface of the shell of the helmet and impact energy in a direction along the outer surface of the shell of the helmet.").

A POSITA would have found it obvious to combine these elements as a matter of routine implementation, as their combination is a straightforward and predictable combination of known elements according to known methods to yield predictable results, and the above comfort liners/lining layers are ready for improvement through incorporation into any of the above helmets. The known technique of using comfort liners to improve fit, comfort, and heat management would improve the above mentioned helmets in similar ways as those disclosing comfort liners.

As one example, Weber discloses "a 'comfort' liner 123 configured to closely surround the head of the wearer," Weber, [0044-0045], but it does not include additional details regarding such comfort liner. Piper (for example) provides those details, including its materials (e.g., "lower-density, open-cell foam material") and its characteristics ("provides sweat and heat management characteristics"). Piper, [0109]. Similarly, Ferrara 2006 describes how "a compressible (e.g., foam) internal liner 32′ can then be added (step 80) to the multilayer shell 30′. FIG. 6 shows a cross-section of a portion of the shell 30′ and of the internal liner 32′. The internal liner 32′ is attached (e.g., with an adhesive) to an internally facing surface of the inner layer 28′. The shape of the internal liner 32′ conforms to the general shape of the shell 30′ and to the shape of a wearer's head." Ferrara 2006 at [0060]. Similarly, Puchalski states that "padding or cushioning may also

be provided along the inside of the shell for increased comfort, better fit and to assist in the absorption of any impact forces." Puchalski at 1:53-55. Copeland also describes how a helmet has inserts "include[ing] a foam member," which is "manufactured from a softer foam material than base 12 for additional comfort." Copeland at [0023]. And Madey describes how a "[h]elmet 40 comprises an inner helmet layer (e.g., an energy-absorbing layer) 41, a helmet retention system (e.g., straps 42 and foam padding inserts, not shown) to affix inner helmet layer 41 to a wearer's head…." Madey at [0025]. A POSITA would have been motivated to modify Weber's helmet to incorporate a more-specific foam comfort liner as described in Piper, Ferrara 2006, Puchalski, Copeland, or Madey to achieve comfort, fit, and heat and sweat management. A POSITA would have found it obvious to combine these elements as a matter of routine implementation, as it is a straightforward and predictable combination of known elements according to known methods to yield predictable results, and Weber's general comfort liner is ready for improvement through incorporation of Piper's, Ferrara 2006's, Puchalski's, Copeland's, or Madey's liner. This known technique of adding a user comfort layer would improve Weber's helmet in a similar way to Piper or Ferrara.

Further, a POSITA would have had a reasonable expectation of success in combining the comfort liner/lining layer of Piper, Ferrara 2006, Puchalski, Copeland, or Madey Ferrara 2006 with the helmet of Weber because such comfort liners were a known structure that had been demonstrated to improve safety and comfort, including heat and sweat management. Additionally, Ferrara 2006 expressly provides teachings on how a lining layer could be incorporated into a helmet, Ferrara at [0060], as does Copeland, Copeland at [0022-23], and a POSITA would have reasonably expected to be able to incorporate a lining layer into Weber in a similar way.

For another example, a POSITA would have been motivated to combine the comfort liner of Piper, Ferrara 2006, Puchalski, Copeland, or Madey Ferrara 2006 with the helmet of Kleiven. Each is analogous art to the claims of the Asserted Patents. As with the claims of the asserted patents, Kleiven addresses the problem of reducing rotational acceleration on the brain during

impacts with the head. Kleiven is directed to the field of "a material/structure that protects the head and body in a collision or against other types of impact. Specifically, it relates to an improved material/structure that reduces angular/rotational motion or acceleration of the human brain and body caused by oblique impact." Kleiven, [0002]. Kleiven also addresses that problem in the same way as the claims of the asserted patents, by allowing relative sliding to reduce rotational acceleration on the brain during impacts with the head. Kleiven, [0002] ("In the material/structure, there is an inner layer and an outer layer and a separation between the inner layer and the outer layer by spikes that are constructed so that they permit displacement of the outer layer relative to the inner layer, hereby reducing the force from an oblique impact.").

A POSITA would have been motivated to combine Kleiven's helmet with Piper's, Ferrara 2006's, Puchalski's Copeland's, or Madey's comfort liner for all the reasons described above. Further, Kleiven recognizes that foam on the interior of a helmet can "improve[] the capacity of the headgear to conform to the head." Kleiven, [0014]. This would have motivated a POSITA to look to disclosures of such interiors in helmets, especially such disclosures that solve the same problem. Piper's comfort liner is also positioned under an inner layer similar that disclosed in Kleiven, further motivating a POSITA to combine the two. As discussed above, a POSITA would also have reasonably expected success due to these similarities and for additional reasons: comfort layers/lining layers were standard in helmets, and Piper's, Ferrara 2006's, Puchalski's, Copeland's, or Madey's comfort liner would easily fit into Kleiven's design. A POSITA combining these references would also reasonably expect success because such comfort liners were a known structure that had been demonstrated to improve safety and comfort, including heat and sweat management, including all the reasons described above, and addition of such a foam liner would have been a matter of predictable and routine implementation within the knowledge and skill of a POSITA.

As another example, a POSITA would have been motivated to combine Hawkins' helmet with Piper's, Ferrara 2006's, Puchalski's, Copeland's, or Madey's comfort liner for all the reasons

previously described. Further, Hawkins describes a helmet with "machine elements" and matrix material (such as fluids) that can shear and cause relative sliding in response to impact forces may "be stacked so that there will be more than one layer of machine elements." Hawkins at [0050], [0053]; [0048]. Although Hawkins does not expressly describe a foam-based comfort lining/lining layer, but layers are standard across all fields of helmets as discussed above, and a POSITA would have been motivated to incorporate such a comfort liner from Piper, Ferrara 2006, Puchalski, Copeland, or Madey in Hawkins' helmet. Hawkins describes the specifics of its force diversion apparatus in detail across multiple implementations, but it does not provide further detail on other components of a helmet. A POSITA reading Hawkins would have understood that comfort liners/lining layers to conform to a head are desirable and ubiquitous in helmet design and would thus look to references such as Piper, Ferrara 2006, Puchalski, Copeland, or Madey for teachings on how to incorporate this feature. A POSITA would also have reasonably expected success in incorporating a foam-based comfort liner/lining layer into Hawkins for the same or similar reasons as described above.

As another example, a POSITA would have been motivated to combine Ferrara -2007's helmet with Piper's, Ferrara 2006's, Puchalski's, or Copeland's comfort liner for all the reasons previously described. Ferrara describes a helmet with "cells" that can "shear relative to the inner layer 106 in response to tangential components of an impact, absorbing those components as well." Ferrara 2007 at [0086]. Ferrara describes lining layers in various embodiments, *e.g.*, Ferrara 2007 at [0097] (inner components "together form a conformable inner liner"), but it does not expressly describe this feature in all embodiments or specify that the inner liner is foam. A POSITA would thus have been motivated to look to other references such as Piper, Ferrara 2006, Puchalski, or Copeland to identify other implementations of comfort liners and materials to use for such comfort liners. As discussed above, a POSITA would also have reasonably expected success due to these similarities and for additional reasons: comfort layers/lining layers were standard in helmets, and Piper's, Ferrara 2006's, Puchalski's, Copeland's, or Madey's comfort liner would easily fit into

Ferrara 2007's design. A POSITA combining these references would also reasonably expect success because such comfort liners were a known structure that had been demonstrated to improve safety and comfort, including heat and sweat management, including all the reasons described above, and addition of such a foam liner would have been a matter of predictable and routine implementation within the knowledge and skill of a POSITA.

As another example, a POSITA would have been motivated to combine Dotsuko's helmet with Piper's, Ferrara 2006's, Puchalski's, or Copeland's comfort liner for all the reasons previously described. Dotsuko describes a helmet with multiple protective layers that can move/slide relative to one another, but it does not expressly discuss a foam comfort liner/liner layer. As discussed above, foam comfort liners/liner layers were standard across all fields of helmets, including motorcycle/racing helmets which Dotsuko discusses. A POSITA would have been motivated to incorporate such a comfort liner from Piper, Ferrara 2006, Puchalski, Copeland, or Madey in Dotsuko's helmet. A POSITA reading Dotsuko would have understood that comfort liners/lining layers to conform to a head are desirable and ubiquitous in helmet design and would thus look to references such as Piper, Ferrara 2006, Puchalski, Copeland, or Madey for teachings on how to incorporate this feature. A POSITA would also have reasonably expected success in incorporating a foam-based comfort liner/lining layer into Dotsuko for the same or similar reasons as described above.

As another example, a POSITA would have been motivated to combine the Lazer P-Nut, Schutt Ion 4D, or Schutt DNA Pro Plus helmets with Piper's, Ferrara 2006's, Puchalski's, Copeland's, or Madey's comfort liner for all the reasons previously described. A POSITA would also have been motivated to combine the Lazer P-Nut, Schutt Ion 4D, or Schutt DNA Pro Plus helmets with the foam liners disclosed in the POC Trabec Race, POC Receptor Backcountry MIPS, POC Cortex DH, Xenith X1, the TSG Kraken, Burton RED Hi-Fi, Lazer Superskin, and Back on Track EQ2 helmets, for the reasons described, including that a POSITA would have known these foam-based comfort liners are a common and desirable helmet design element. A POSITA would

have had a reasonable expectation of success because comfort liners of this type were a known structure for improving safety and comfort and their inclusion would have been a predictable matter of routine implementation for a POSITA.

ii) Incorporating mechanical connections into sliding layers would have been an obvious feature of helmets allowing relative sliding and reducing rotational acceleration of the brain

To the extent Plaintiff contends that the prior art identified as anticipating the claims does not disclose the connection of layers, such as via mechanical connections (e.g., trusses or elastomeric connectors), to allow relative displacement/sliding a POSITA would have found obvious the modification of a helmet allowing relative sliding and reducing rotational acceleration of the brain to include such a connection. A POSITA would have been motivated to and found it obvious to physically connect layers with mechanical connections because doing so constituted utilizing a known structure to further reduce rotational acceleration of the brain during impact, to yield predictable results, and as a way of improving the structural integrity, and overall safety, of the helmet. Utilizing a plurality of mechanical connections between layers configured to move/slide relative to one another was well known before 2011. *See, e.g.*, Halldin-II; Weber; Kleiven; Ferrara 2006; Ferrara 2007; Madey; Hawkins; Dotsuko; Halldin-III.

Further, a POSITA would have been motivated and found it obvious to incorporate mechanical connections between layers configured to move/slide relative to one another because there were a finite number of predictably successful solutions to the problem of connecting such layers and permitting relative sliding between them in the manner the Asserted Patents discuss. For example, a POSITA would have the choice of providing mechanical connection element(s) at the periphery, e.g., at single points at the exterior of the helmet, or at multiple internal points, including within the sliding layers. A POSITA would have been motivated to incorporate multiple of such internal attachment points because they would protect against failure of one or more

attachment points and also for additional energy absorption and dissipation throughout the helmet as force is imparted on the connecting members.

Further, a POSITA would have had a reasonable expectation of successfully incorporating such internal fixations as described in the above references in a layered helmet. As discussed above, including mechanical connectors between sliding layers was well known in the field of helmet design. A POSITA would have had a reasonable expectation of successfully including additional internal physical fixation in a helmet because it was a predictable matter of routine design and implementation, including, for example, through use of typically used adhesives or attachment techniques.

For example, Halldin-II teaches a helmet with an outer shell connected to an attachment device by "fixation members." Halldin-II, [0013]. Halldin-II teaches multiple types of fixation members, including members 4a-4d that "absorb energy by deforming in an elastic, semi-elastic or plastic way." Halldin-II, [0043], Fig. 3.

Each of Halldin-II's fixation members connects layers of the helmet while (1) absorbing energy and (2) allowing relative sliding between the layers. Figures 2 and 3 teach fixation members 4a and 4b. *Id.*, [0047] (Figure 3, with fixation members, allows "energy absorbing layer 2 to slide in relation to the attachment device 3" and "[t]he fixation absorbs the rotational forces by deforming elastically or semi-elastically), Figs. 2-3 (outer layer 2 connected at portion 9 and inner attachment device 3 connected at portion 8):

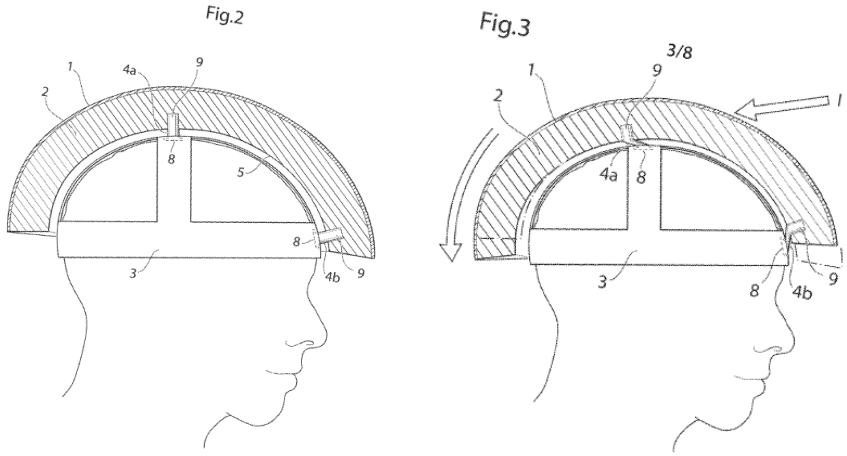

Halldin-II, Figs. 2, 3.

A POSITA would have been motivated to modify, for example, Von Holst to incorporate Halldin-II's fixation members. Von Holst and Halldin-II (which share a common inventor) are analogous to the Asserted Claims: both are directed to the same field of endeavor (helmet safety design), and both address the same problem of improved helmet sliding mechanisms. Von Holst describes layers connected through transformer layers and a connecting member, and the later-filed Halldin-II teaches additional ways to connect layers while maintaining desired sliding to address impact forces. A POSITA would have been motivated to include Halldin-II's fixation connections, which not only connect layers but additionally "absorb energy" by "deforming," Halldin-II, [0043], which would supplement the energy absorption achieved by Von Holst's sliding layers 4.

Furthermore, a POSITA would have been motivated to use Halldin-II's internal connections (i.e., members 4a-d) instead of or in addition to Von Holst's peripheral connecting member 5. Halldin-II teaches that a POSITA would have known that fixation on the periphery and internal fixation are alternatives that could be used separately or together. *See* Halldin-II,

[0057], Fig. 11, [0064] (discussing combination of "master fixation member" and "additional fixation members"). A POSITA would have been motivated to improve Von Holst by adding internal fixation connections to increase the degree of connection throughout the helmet and provide additional mechanisms to absorb energy. A POSITA would have found it obvious to combine these elements as a matter of routine implementation, as their combination is a straightforward and predictable combination of known elements according to known methods to yield predictable results. Von Holst's helmet with sliding layers is ready to be improved by incorporating a layer of internal fixation members that absorbs additional energy. The known technique from Halldin-II of using fixation members to create a connecting layer and absorb energy would improve Von Holst's helmet in a similar way to Halldin-II's helmet.

A POSITA would have a reasonable expectation of success in modifying Von Holst as described. It is easy to apply aspects of Halldin-II's helmet design to Von Holst. Where Von Holst describes sliding layers, Halldin-II describes a "sliding facilitator 5 [Fig. 2] [that] may be a low friction material," which "is provided on outside of the attachment device 3 facing the energy absorbing layer 2" or, alternatively, "on the inside of the energy absorbing layer 2." Halldin-II, [0044]. Halldin-II emphasizes that its fixation members are not usabley only with the specific attachment device embodiments in its specification, but instead would have been readily adaptable to other designs, like Von Holst's helmets, as a matter of routine implementation within the skill of a POSITA: "In other embodiments the attachment device 3 could be … any other design functioning as an attachment device for mounting on a wearer's head." Halldin-II, [0050]. For example, Halldin-II teaches fixation members attached to the outer energy absorbing layer via an "adhesive." Halldin-II, [0052]. Thus, a POSITA would have reasonably expected to be able to implement Halldin-II's fixation members to connect Von Holst's intermediate shell layer to the outer shell.

As another example, a POSITA would have been motivated to combine the helmet of Halldin-I with the connection of layers by fixation members of Halldin-II with a reasonable

expectation of success. In addition to the reasons discussed above with Von Holst, both references address the same problem of reducing rotational acceleration on the brain during impacts with the head. Halldin-I, 3:7-11; Halldin-II, [0005], [0047]. Both references also disclose the same solution to that problem: helmets allowing relative sliding to reduce rotational acceleration on the brain during impacts with the head. Halldin-I, 1:5-6, 2:34-35 (disclosing "a protective helmet with an outer shell and an inner shell" such that "the outer shell of the helmet can be displaced relative to the inner shell."); Halldin-II, [0001] (disclosing "a helmet comprising an energy absorbing layer, with or without any outer shell, and a sliding facilitator being provided inside of the energy absorbing layer."). Moreover, both references name the same inventor.

Additionally, Halldin-I describes that its connections are limited to being placed peripherally "where the probability of an application of an outer force is low." Halldin-I, [00014]. Later-filed Halldin-II addresses this limitation by allowing connection at numerous points within the helmet.

Halldin-II's fixation members provide an optimized connection mechanism over Halldin-I, removing the need for flaps outside of the helmet and allowing more points of connection throughout the helmet. For example, Halldin-I states that "[i]n order to further fix the intermediate layer into place it may also be attached to both of the movable layers at a peripheral edge of the intermediate layer. Preferably, the attachment is made at a part of the structure where the probability of an application of an outer force is low." Halldin-I [00014]. Halldin-I thus poses a design limitation, wherein the connection mechanisms must be placed in specific points, such as the periphery, and was ready for improvement. Halldin-II, which was filed later with a common inventor, recognizes that the connection ***could*** be at the periphery, *see* Halldin-II [0057] ("Fig. 11 shows an embodiment in which the attachment device 3 is fixated to the energy absorbing layer 2 ***at the periphery*** thereof by means of a membrane or sealing foam 24, which could be elastic or adapted for plastic deformation."), but only as one of several alternatives, most of which provide connection mechanisms throughout the helmet. A POSITA would have found it obvious to

combine these elements as a matter of routine implementation, as their combination is a straightforward and predictable combination of known elements according to known methods to yield predictable results, and Halldin-I's helmet with sliding layers is ready for improvement through incorporation of a layer of internal fixation members that additionally absorbs energy. The known technique of using fixation members from Halldin-II to create a connecting layer and absorb energy would improve Halldin-I's helmet in a similar way to Halldin-II.

A POSITA would also have had a reasonable expectation of success in modifying Halldin-I as described for similar reasons as with Von Holst. In addition, it is easy to apply aspects of Halldin-II's helmet design to Halldin-I. Halldin-II describes a "sliding facilitator 5 [Fig. 2] [that] may be a low friction material," which "is provided on outside of the attachment device 3 facing the energy absorbing layer 2" or, alternatively, "on the inside of the energy absorbing layer 2." Halldin-II [0044]. Halldin-II's low-friction layer also has certain similarities with that of Halldin-I, including having a fiber structure. *Compare* Halldin-II [0040] ("If it furthermore conceivable that the sliding is enabled by the structure of the material, for example by the material having a fiber structure such that the fibers slide against each other.") *with* Halldin-I [0004] ("The low friction material comprises fibers. By using fibers as a friction decreasing material the friction between the layers can be decreased."). Halldin-II also teaches multiple ways in which its various embodiments of fixation members could be implemented to connect Halldin-I's intermediate shell layer to the outer shell via the sliding layer. *See, e.g.*, Halldin-II [0042-43], [0052-56]. Halldin-II also emphasizes that its fixating members are not useable only with to the specific attachment device embodiments in the specification: "In other embodiments the attachment device 3 could be … any other design functioning as an attachment device for mounting on a wearer's head."). Thus, a POSITA would have reasonably expected to be able to readily implement Halldin-II's fixation members to connect through Halldin-I's sliding layer and connect Halldin-I's intermediate shell layer to the outer shell (and or to the inner shell).

Additionally, a POSITA would not have been limited to the fixation members of Halldin-II, but would have found other fixation members obvious as well. A POSITA could utilize the teachings of Halldin-II to identify alternative connection mechanism(s) that would have provided mechanical connections for stability while also absorbing energy via deforming and facilitating sliding. For example, A POSITA would have similarly been motivated to modify Von Holst or Halldin-I by incorporating mechanical connection elements of Ferrara 2006 or Dotsuko. Each reference describes physical connections similar to Halldin-II. For example, Ferrara 2006 discloses protective headgear with "an outer layer 20′, an inner layer 28′", and a middle layer comprising a plurality of independent compressible members 50′ and optionally fluid such as liquid or air in interstitial region 52′ disposed between the inner and outer layers 28′, 20′. Ferrara 2006, [0053].

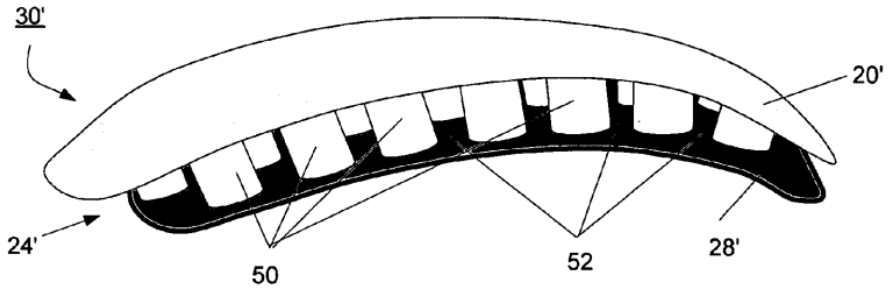

FIG. 4

Ferrara 2006, FIG. 4.

Ferrara 2006's members 50 "compress or shear independently" and "have a resilient, compressible solid or foam construction." Ferrara 2006, [0053]. This connection via members "enables the outer layer to move during impact independently of the inner layer in a scalp-like fashion." Ferrara 2006, [0056]; *see also id.*, [0032] ("respond to an impact by…rotating by the outer layer and the energy-absorbing layer with respect to the inner layer.").

Similarly, Halldin-III (which also shares a common inventor with Von Holst and Halldin-I) discloses a locking device for use in a helmet with sliding layers such as that described in EP-

A1-1246548 (the European counterpart to Von Holst). Halldin-III at [0012-13]. The locking device has a "lower portion of the layer-guiding member 10 [that] can be elastic in its longitudinal direction L and in the direction of propagation plane P of the inner layer and the outer layer 4, 6."

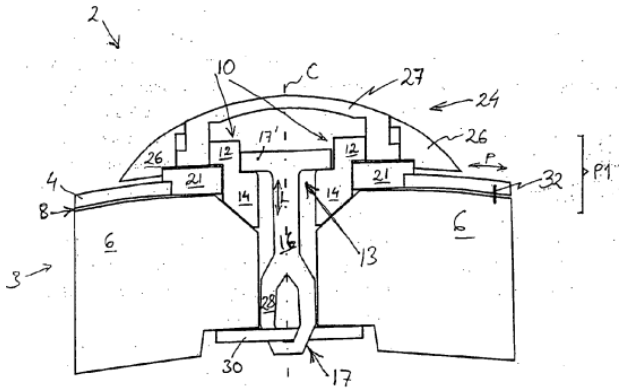

FIG. 1A

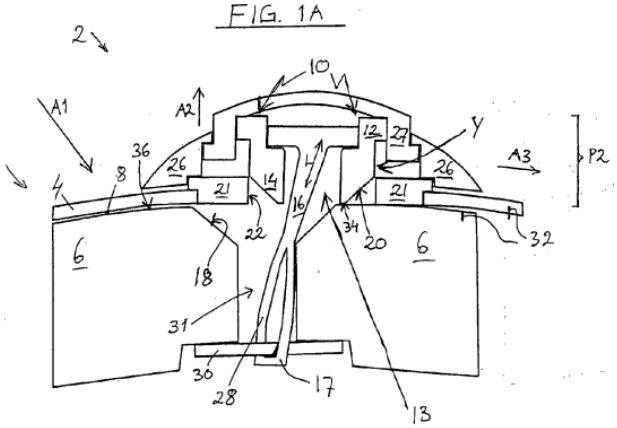

FIG. 1B

Halldin-III at [0021], Figs. 1A-B.

Similarly, Dotsuko discloses a helmet with an inner liner 50 connected to liner 40 and outer shell 20 with liner 30 comprising a plurality of elastic straps and an elastic body disposed between the inner and outer layers.

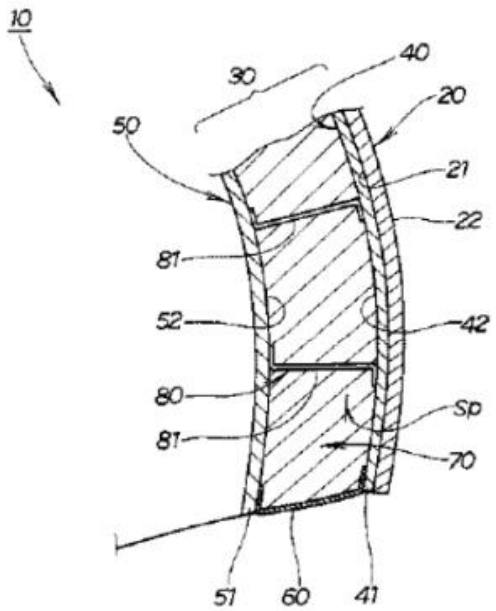

Dotsuko, [0013], [0017].

A POSITA would have been motivated to modify Von Holst's and/or Halldin-I's sliding layers to additionally include Ferrara 2006's or Dotsuko's compressible members and elastic straps with a reasonable expectation of success for similar reasons as with Halldin-II. Additionally, Ferrara 2006's compressible members would readily fit into Von Holst's and Halldin-I's sliding layer: Ferrara 2006's members can vary in lengths, and "the outer layer 20′ and inner layer 28′ approach and may touch each other so that any gap between the layers 20′, 28′ either is imperceptible or does not exist." Ferrara 2006 at [0056]. And further with respect to Von Holst, given that Ferrara 2006 further utilizes fluids, similar to Von Holst, a POSITA would have been motivated to incorporate members similar to those used in Ferrara 2006 to provide additional connection points throughout the sliding layer for stability and energy absorption while still "enabl[ing] the outer layer to move during impact independently of the inner layer in a scalp-like fashion." Ferrara 2006 at [0056].

Similarly, Halldin-III's locking device is expressly described as fitting within a helmet similar to Von Holst, and which is has similar key features as Halldin-I's helmet (e.g., and outer and inner layer with a sliding layer that may include, for example, "[t]eflon, oil, air or the similar.") Halldin-III recognizes various advantages of its device by which a POSITA may be motivated to incorporate it into Von Holst or Halldin-I, including a design where "the energy-absorbing properties of the protective helmet only are activated when the helmet is subjected to oblique impacts that exceed a certain power" and one where it is easier to tell "if a displacement of the layers has taken place and the energy-absorbing function has been released, whereby the helmet is consumed" and must be replaced. Halldin-III at [0007-8]. A POSITA would thus have been motivated to incorporate Halldin-III's locking device into either Von Holst or Halldin-I, and they would have had a reasonable expectation of successfully doing so for similar reasons as described above.

Similarly, Dotsuko describes an additional connection mechanism via "multiple straps 81 … made of an elastic material such as rubber. As these strap 81 [] have certain elongation properties, they allow a certain degree of relative rotation of the shell 20 and the outer liner 40 with respect to the inner liner 50, while preventing excessive relative rotation beyond this range." Dotsuko at [0017]. Dotsuko's elastic straps thus perform a similar function as Von Holst's and Halldin-I's periphery connecting members, which counteract mutual displacement among the sliding layers and deform to absorb energy, but provides multiple points over which energy may be absorbed via deformation. A POSITA would thus have been motivated to incorporate Dotsuko's elastic straps into either Von Holst or Halldin, and they would have a reasonable expectation of success in doing so for similar reasons as described above.

As another example, a POSITA would have been motivated to modify the energy absorbing layers of the Schutt Ion 4D helmet to include sliding layers operable to absorb rotational and shear forces as disclosed in the TSG Kraken and POC Trabec. The Schutt Ion 4D is designed to absorb energy by flexing. G. Alston Rush et al., *Modified Drop Tower Impact Tests For American*

Football Helmets, J. Visualized Experiments (120):53929 (Feb. 19, 2017), https://pmc.ncbi.nlm.nih.gov/articles/PMC5407596/ (RVST00002711-RVST00002733). The POC Trabec and TSG Kraken are designed to reduce rotational force to the brain through a liner designed to slip on impact. Bicycle Helmet Safety Institute, *Bicycle Helmets for the 2010 Season*, Helmets.org (Feb. 5, 2010), https://web.archive.org/web/20100205103230/http:/www.helmets.org:80/ helmet10.htm (RVST00001316-RVST00001411). Thus, a POSITA would have been motivated to improve the Schutt Ion 4D's reduction of impact forces by including the slidable layers in the POC Trabec and TSG Kraken in order to ensure the helmet could absorb rotational and shear forces.

A POSITA would have a reasonable expectation of success in modifying the Schutt Ion 4D helmet to include slidable layers because it already includes an intermediate flexible layer that allows movement to reduce impact forces.

5. The '635 patent

Each of the asserted claims of the '635 patent is invalid under 35 U.S.C. § 103 because it would have been obvious to one of ordinary skill in the art at the time of the invention in light of one or more prior art references and the understanding of one of ordinary skill in the art. In accordance with the agreed schedule, prior art references rendering the asserted claims of the '635 patent obvious are discussed below and included in claim chart Exhibits D listed in the chart above. Further reasons to combine the references identified include the nature of the problem being solved, the express, implied and inherent teachings of the prior art, the knowledge of persons of ordinary skill in the art, that such combinations would have yielded predictable results, and such combinations would have represented known alternatives to a person of ordinary skill in the art.

a) Obviousness Combinations

The accompanying charts identify how each prior art reference discloses the limitations of the asserted claims on a limitation-by-limitation basis at least under Plaintiff's apparent infringement theories and/or claim interpretations, and select combinations are identified below.

If Plaintiff argues that any particular prior art reference lacks any feature for which no combining references are provided in the relevant chart, a person of ordinary skill in the art as of any priority date for the ’635 patent would at a minimum have been motivated to modify the reference to include the allegedly missing feature, or to combine it with other references that include that feature, as discussed below. The obviousness combinations are listed below (and it should be understood that each listed combination can also include the knowledge of a person of ordinary skill in the art):

’635 Patent Claims are Obvious under 35 U.S.C. § 103 **Claim, Basis, References**
• Claims 1-4, 8-12, and 17-20 are obvious over Weber in view of Puchalski • Claims 1-4, 8-12, and 17-20 are obvious over Weber in view of Dotsuko • Claims 1-4, 8-12, and 17-20 are obvious over Weber in view of Madey • Claims 1-4, 8-12, and 17-20 are obvious over Von Holst in view of Puchalski • Claims 1-4, 8-12, and 17-20 are obvious over Von Holst in view of Dotsuko • Claims 1-4, 8-12, and 17-20 are obvious over Von Holst in view of Madey • Claims 1-4, 8-12, and 17-20 are obvious over Von Holst in view of any one of Puchalski, Dotsuko, and Madey, and further in view of any one of Piper, Ferrara 2006, Puchalski, Copeland, or Madey. • Claims 1-4, 8-12, and 17-20 are obvious over Halldin-I in view of Puchalski • Claims 1-4, 8-12, and 17-20 are obvious over Halldin-I in view of Dotsuko • Claims 1-4, 8-12, and 17-20 are obvious over Halldin-I in view of Madey • Claims 1-4, 8-12, and 17-20 are obvious over Halldin-I in view of any one of Puchalski, Dotsuko, and Madey, and further in view of any one of Piper, Ferrara 2006, Puchalski, Copeland, or Madey. • Claims 1-4, 8-12, and 17-20 are obvious over Halldin-I in view of Puchalski and further in view of any one of Halldin-II, Ferrara 2006, Dotsuko, Ferrara 2007, Kleiven, Halldin III, Madey, Hawkins, and Weber • Claims 1-4, 8-12, and 17-20 are obvious over Halldin-I in view of Dotsuko and further in view of any one of Halldin-II, Ferrara 2006, Dotsuko, Ferrara 2007, Kleiven, Halldin III, Madey, Hawkins, and Weber • Claims 1-4, 8-12, and 17-20 are obvious over Halldin-I in view of Madey and further in view of any one of Halldin-II, Ferrara 2006, Dotsuko, Ferrara 2007, Kleiven, Halldin III, Madey, Hawkins, and Weber • Claims 1-4, 8-12, and 17-20 are obvious over Halldin-I in view of any one of Puchalski, Dotsuko, and Madey, and further in view of any one of Halldin-II, Ferrara 2006, Dotsuko, Ferrara 2007, Kleiven, Halldin III, Madey, Hawkins, and Weber, and further in view of any one of Piper, Ferrara 2006, Puchalski, Copeland, or Madey

’635 Patent Claims are Obvious under 35 U.S.C. § 103 Claim, Basis, References
• Claims 1-4, 8-12, and 17-20 are obvious over Von Holst in view of Puchalski and further in view of any one of Halldin-II, Ferrara 2006, Dotsuko, Ferrara 2007, Kleiven, Halldin III, Madey, Hawkins, and Weber • Claims 1-4, 8-12, and 17-20 are obvious over Von Holst in view of Dotsuko and further in view of any one of Halldin-II, Ferrara 2006, Dotsuko, Ferrara 2007, Kleiven, Halldin III, Madey, Hawkins, and Weber • Claims 1-4, 8-12, and 17-20 are obvious over Von Holst in view of Madey and further in view of any one of Halldin-II, Ferrara 2006, Dotsuko, Ferrara 2007, Kleiven, Halldin III, Madey, Hawkins, and Weber • Claims 1-4, 8-12, and 17-20 are obvious over Von Holst in view of Puchalski and further in view of any one of Halldin-II, Ferrara 2006, Dotsuko, Ferrara 2007, Kleiven, Halldin III, Madey, Hawkins, and Weber, and further in view of any one of Piper, Ferrara 2006, Puchalski, Copeland, or Madey • Claims 1-4, 8-12, and 17-20 are obvious over Kleiven in view of Puchalski • Claims 1-4, 8-12, and 17-20 are obvious over Kleiven in view of Madey • Claims 1-4, 9-12, and 17-20 are obvious over Kleiven in view of Dotsuko • Claim 8 is obvious over Kleiven in view of Madey and further in view of any one of Piper, Puchalski, Ferrara 2006, Ferrara 2007, and Copeland. • Claim 8 is obvious over Kleiven in view of Puchalski and further in view of any one of Piper, Ferrara 2006, Ferrara 2007, Copeland, and Madey. • Claim 8 is obvious over Kleiven in view of Dotsuko and further in view of any one of Piper, Puchalski, Ferrara 2006, Ferrara 2007, Copeland, and Madey. • Claims 1-4, 8-12, and 17-20 are obvious over Hawkins in view of Puchalski • Claims 1-4, 8-12, and 17-20 are obvious over Hawkins in view of Madey • Claims 1-4, 9-12, and 17-20 are obvious over Hawkins in view of Dotsuko • Claim 8 is obvious over Hawkins in view of Puchalski and further in view of any one of Piper, Ferrara 2006, Copeland, Ferrara 2007, and Madey • Claim 8 is obvious over Hawkins in view of Madey and further in view of any one of Piper, Puchalski, Ferrara 2006, Ferrara 2007, and Copeland. • Claim 8 is obvious over Hawkins in view of Puchalski and further in view of any one of Piper, Puchalski, Ferrara 2006, Copeland, Ferrara 2007, and Madey. • Claim 8 is obvious over any one of Von Holst, Halldin-I, and Ferrara 2007 in view of any one of Puchalski, Dotsuko, and Madey, further in view of any one of Piper, Puchalski, Ferrara 2006, Copeland, and Madey. • Claim 8 is obvious over any one of Von Holst, Halldin-I, and Ferrara 2007 in view of any one of Puchalski, Dotsuko, and Madey, further in view of any one of Piper, Puchalski, Ferrara 2006, Copeland, and Madey, and further in view of any one of Nichols and Von Holst. • Claim 8 is obvious over Von Holst or Halldin-I in view of any one of Halldin-II, Ferrara 2006, Dotsuko, Ferrara 2007, Kleiven, Halldin III, Madey, Hawkins, and Weber, in view of any one of Puchalski, Dotsuko, and Madey, in view of any one of Piper, Puchalski, Ferrara 2006, Copeland, Ferrara 2007, and Madey.

’635 Patent Claims are Obvious under 35 U.S.C. § 103 Claim, Basis, References
• Claim 8 is obvious over Von Holst or Halldin-I in view of any one of Halldin-II, Ferrara 2006, Dotsuko, Ferrara 2007, Kleiven, Halldin III, Madey, Hawkins, and Weber, in view of any one of Puchalski, Dotsuko, and Madey, in view of any one of Piper, Puchalski, Ferrara 2006, Copeland, Ferrara 2007, and Madey, and further in view of Nichols. • Claim 8 is obvious over Madey in view of any one of Puchalski, Piper, Ferrara 2006, Ferrara 2007 and Copeland. • Claim 8 is obvious over Madey in view of any one of Puchalski, Piper, Ferrara 2006, Ferrara 2007 and Copeland, and further in view of Nichols or Von Holst. • Claims 1-3, 8-11, and 17-19 are obvious over Ferrara 2006 in view of Puchalski • Claims 1-3, 8-11, and 17-19 are obvious over Ferrara 2006 in view of Dotsuko • Claims 1-3, 8-11, and 17-19 are obvious over Ferrara 2006 in view of Madey • Claims 1-4, 8-12 and 17-20 are obvious over Ferrara 2007 in view of Puchalski • Claims 1-4, 8-12 and 17-20 are obvious over Ferrara 2007 in view of Dotsuko • Claims 1-4, 8-12 and 17-20 are obvious over Ferrara 2007 in view of Madey • Claim 8 is obvious over Dotsuko in view of Piper • Claim 8 is obvious over Dotsuko in view of Ferrara 2006 • Claim 8 is obvious over Dotsuko in view of Copeland • Claim 8 is obvious over Dotsuko in view of Madey • Claim 8 is obvious over Dotsuko in view of Ferrara 2007 • Claims 1-4, 8-12, and 17-20 are obvious over any one of Weber, Von Holst, Halldin-I, Kleiven, Hawkins, Ferrara 2006, Ferrara 2007, Halldin-II, and Halldin-III, in view of any one of Puchalski, Dotsuko, and Madey, and further in view of Nichols • Claims 1-4, 8-12, and 17-20 are obvious over any one of Weber, Halldin-I, Kleiven, Hawkins, Ferrara 2006, Ferrara 2007, Halldin-II, and Halldin-III, in view of any one of Puchalski, Dotsuko, and Madey, and further in view of Von Holst • Claims 1-4, 8-12, and 17-20 are obvious over Von Holst in view of Halldin-II in view of any one of Puchalski, Dotsuko, and Madey, and further in view of Nichols • Claims 1-4, 8-12, and 17-20 are obvious over Von Holst in view of Halldin-II in view of any one of Puchalski, Dotsuko, and Madey, and further in view of Nichols, and further in view of any one of Piper, Ferrara 2006, Puchalski, Copeland, or Madey • Claims 1-4, 8-12, and 17-20 are obvious over Halldin-I in view of Halldin-II in view of any one of Puchalski, Dotsuko, and Madey, and further in view of Nichols • Claims 1-4, 8-12, and 17-20 are obvious over Halldin-I in view of Halldin-II in view of any one of Puchalski, Dotsuko, and Madey, and further in view of Nichols, and further in view of any one of Piper, Ferrara 2006, Puchalski, Copeland, or Madey • Claims 1-4, 8-12, and 17-20 are obvious over Halldin-I in view of Halldin-II in view of in view of Puchalski, Dotsuko, or Madey, and further in view of Von Holst • Claims 1-4, 8-12, and 17-20 are obvious over Halldin-I in view of any one of Puchalski, Dotsuko, and Madey, and further in view of any one of Halldin-II, Ferrara 2006, Ferrara 2007, Kleiven, Halldin-III, Weber, and Hawkins.

’635 Patent Claims are Obvious under 35 U.S.C. § 103 Claim, Basis, References
• Claims 1-4, 8-12, and 17-20 are obvious over Halldin-I in view of any one of Puchalski, Dotsuko, and Madey, in view of any one of Halldin-II, Ferrara 2006, Ferrara 2007, Kleiven, Halldin-III, Weber, and Hawkins, and further in view of Von Holst or Nichols. • Claims 1-4, 8-12, and 17-20 are obvious over Halldin-I in view of any one of Puchalski, Dotsuko, and Madey, in view of any one of Halldin-II, Ferrara 2006, Ferrara 2007, Kleiven, Halldin-III, Weber, and Hawkins, and further in view of Von Holst or Nichols, and further in view of any one of Piper, Ferrara 2006, Puchalski, Copeland, or Madey. • Claims 1-4, 8-12, and 17-20 are obvious over Von Holst in view of any one of Puchalski, Dotsuko, and Madey, in view of any one of Halldin-II, Ferrara 2006, Ferrara 2007, Kleiven, Halldin-III, Weber, and Hawkins. • Claims 1-4, 8-12, and 17-20 are obvious over Von Holst in view of any one of Puchalski, Dotsuko, and Madey, in view of any one of Halldin-II, Ferrara 2006, Ferrara 2007, Kleiven, Halldin-III, Weber, and Hawkins, and further in view of any one of Piper, Ferrara 2006, Puchalski, Copeland, or Madey. • Claims 1-4, 8-12, and 17-20 are obvious over Von Holst in view of any one of Puchalski, Dotsuko, and Madey, in view of any one of Halldin-II, Ferrara 2006, Ferrara 2007, Kleiven, Halldin-III, Weber, and Hawkins, and further in view of Nichols. • Claims 1-4, 8-12, and 17-20 are obvious over Von Holst in view of any one of Puchalski, Dotsuko, and Madey, in view of any one of Halldin-II, Ferrara 2006, Ferrara 2007, Kleiven, Halldin-III, Weber, and Hawkins, and further in view of Nichols, and further in view of any one of Piper, Ferrara 2006, Puchalski, Copeland, or Madey. • Claims 1-3, 8-11, and 17-19 are obvious over Puchalski, Dotsuko, or Madey, in view of Nichols • Claims 1-3, 8-11, and 17-19 are obvious over Puchalski, Dotsuko, or Madey, in view of Von Holst • Claims 1-3, 8-11, and 17-19 are obvious over Halldin-II or Halldin-III in view of any one of Puchalski, Dotsuko, and Madey, and further in view of Piper, Puchalski, Ferrara 2006, Ferrara 2007, Copeland, and Madey. • Claims 1-3, 8-11, and 17-19 are obvious over Halldin-II or Halldin-III in view of any one of Puchalski, Dotsuko, and Madey, and further in view of Piper, Puchalski, Ferrara 2006, Ferrara 2007, Copeland, and Madey, and further in view of Nichols or Von Holst. • Claims 1-4, 8-12, and 17-20 are obvious over Knight in view of Dotsuko • Claims 1-4, 8-12, and 17-20 are obvious over Knight in view of Puchalski • Claims 1-4, 8-12, and 17-20 are obvious over Knight in view of Madey • Claims 1-4, 8-12, and 17-20 are obvious over Knight in view of Weber and Dotsuko • Claims 1-4, 8-12, and 17-20 are obvious over Knight in view of Weber and Puchalski • Claims 1-4, 8-12, and 17-20 are obvious over Knight in view of Weber and Madey • Claims 1-4, 8-12, and 17-20 are obvious over Knight in view of Kleiven and Dotsuko • Claims 1-4, 8-12, and 17-20 are obvious over Knight in view of Kleiven and Puchalski • Claims 1-4, 8-12, and 17-20 are obvious over Knight in view of Kleiven and Madey • Claims 1-4, 8-12, and 17-20 are obvious over Knight in view of Ferrara 2006 and Dotsuko

’635 Patent Claims are Obvious under 35 U.S.C. § 103 Claim, Basis, References
• Claims 1-4, 8-12, and 17-20 are obvious over Knight in view of Ferrara 2006 and Puchalski • Claims 1-4, 8-12, and 17-20 are obvious over Knight in view of Ferrara 2006 and Madey • Claims 1-4, 8-12, and 17-20 are obvious over Knight in view of Von Holst and Dotsuko • Claims 1-4, 8-12, and 17-20 are obvious over Knight in view of Von Holst and Puchalski • Claims 1-4, 8-12, and 17-20 are obvious over Knight in view of Von Holst and Madey • Claims 1-4, 8-12, and 17-20 are obvious over Knight in view of Halldin-I and Dotsuko • Claims 1-4, 8-12, and 17-20 are obvious over Knight in view of Halldin-I and Puchalski • Claims 1-4, 8-12, and 17-20 are obvious over Knight in view of Halldin-I and Madey • Claims 1-4, 8-12, and 17-20 are obvious over Knight in view of Ferrara 2007 and Dotsuko • Claims 1-4, 8-12, and 17-20 are obvious over Knight in view of Ferrara 2007 and Puchalski • Claims 1-4, 8-12, and 17-20 are obvious over Knight in view of Ferrara 2007 and Madey • Claims 1-4, 8-12, and 17-20 are obvious over Knight in view of Halldin-II and Dotsuko • Claims 1-4, 8-12, and 17-20 are obvious over Knight in view of Halldin-II and Puchalski • Claims 1-4, 8-12, and 17-20 are obvious over Knight in view of Halldin-II and Madey • Claims 1-4, 8-12, and 17-20 are obvious over Knight in view of Halldin-III and Dotsuko • Claims 1-4, 8-12, and 17-20 are obvious over Knight in view of Halldin-III and Puchalski • Claims 1-4, 8-12, and 17-20 are obvious over Knight in view of Halldin-III and Madey • Claims 1-4, 8-12, and 17-20 are obvious over Knight in view of Hawkins and Dotsuko • Claims 1-4, 8-12, and 17-20 are obvious over Knight in view of Hawkins and Puchalski • Claims 1-4, 8-12, and 17-20 are obvious over Knight in view of Hawkins and Madey • Claims 1-4, 8-12, and 17-20 are obvious over Knight in view of any one of Von Holst and Hallsin-1, further in view of Halldin-II, and further in view of any one of Dotsuko, Puchalski, and Madey. • Claims 1-4, 8-12 and 17-20 are obvious over any one of Weber, Von Holst, Halldin-I, Kleiven, Ferrara 2007, Hawkins and Halldin-III in view of the Lazer P-Nut MIPS, POC Trabec Race, Back on Track EQ2, Lazer Superskin, TSG Kraken, and Burton RED Hi-Fi Helmets • Claims 1-3, 8-12 and 17-19 are obvious over any one of Ferrara 2006, Dotsuko, Madey, Puchalski, and Halldin-II in view of the Lazer P-Nut MIPS, POC Trabec Race, Back on Track EQ2, Lazer Superskin, TSG Kraken, and Burton RED Hi-Fi Helmets • Claims 1-4, 8-12, and 17-20 are obvious over the Schutt Ion 4D in view of any one of the TSG Kraken and POC Trabec Race • Claims 1-4, 8-12, and 17-20 are obvious over the Schutt DNA Pro Plus in view of any one of the TSG Kraken and POC Trabec Race • Claims 1-3, 8-12, and 17-19 are obvious over the Xenith X1 in view of the Lazer P-Nut MIPS Helmet, POC Trabec Race, Back on Track EQ2, Lazer Superskin, TSG Kraken, and Burton RED Hi-Fi • Claims 1-3, 9-11, and 17-19 are obvious in view of Dotsuko • Claims 1-3, 8-11, and 17-19 are obvious in view of Madey

’635 Patent Claims are Obvious under 35 U.S.C. § 103 Claim, Basis, References
• Claims 1-3, 8-11, and 17-19 are obvious in view of Puchalski • Claims 1-3, 8- 12, and 17-19 are obvious in view of the Back on Track EQ2 Helmet • Claims 1-3, 8-12, and 17-19 are obvious in view of the Xenith X1 Helmet • Claims 1-3, 8-12, and 17-19 are obvious in view of the POC Cortex DH Helmet • Claims 1-3, 8-12, and 17-19 are obvious in view of the POC Receptor Backcountry MIPS Helmet • Claims 1-3, 8-12, and 17-19 are obvious in view of the POC Trabec Race • Claims 1-3, 8-12, and 17-19 are obvious in view of the TSG Kraken • Claims 1-3, 8-12, and 17-19 are obvious in view of the Lazer P-Nut MIPS Helmet • Claims 1-3, 8-12, and 17-19 are obvious in view of the Burton RED HiFi Helmet

b) Reasons to Modify, Extend, or Combine Claimed Concepts

As set forth in Sections IV and V and claim chart Exhibits D listed in the above chart, the prior art references and products demonstrate that the concepts described in the ’635 patent were well known and in public use as of the earliest possible priority date of the ’635 patent. The ’635 patent does not introduce any new concepts for helmets allowing for relative sliding between layers, nor does it combine known concepts in any inventive or non-obvious manner. The disclosure of the references and reasons for modifying and/or combining such references include those identified in the General Comments set out in Section IV above, the analysis below, and the evidence cited in claim chart Exhibits D as noted in the chart above, which are incorporated by reference into this section as well as the following:

i) A chin strap attached to an inner layer to secure an inner layer (inner shell layer/inner conforming layer) of a helmet while an outer layer (outer shell layer) is allowed to slide would have been an obvious feature of helmets allowing relative sliding

To the extent Plaintiff contends that the prior art identified in the Exhibits as anticipating the claims does not disclose a chin strap connected to an inner layer, a POSITA would have found obvious to incorporate such a chin strap and would have understood the benefits of doing so. As discussed in Section V, chin straps were ubiquitous in helmet design, *see, e.g.*, Newman at 51 (“Usually, the chin strap assembly is a major element of the retention system.”), as was placing

chin straps on the inner layers of helmets, *see, e.g.*, Field (US5,353,437), 2:51-52, 5:48-51; Mills-2006 169; Copeland 1991 (US5,129,108), Fig. 3; Nomiyama (US4,012,794), 2:30-31, 2:14-16; Goldman (US7,770,239), 1:19-32.

Further, a POSITA would have been motivated to and found it obvious to attach a chin strap to an inner layer because such a combination was widely known, particularly in helmets utilizing sliding layers, as were its benefits. *See, e.g.*, Dotsuko at [0022] (disclosing, in a helmet designed to have layers slide relative to one another, that "since the chin strap 90 is attached to the liner 30, it becomes easier for the shell 20 to rotate relative to the liner 30 (that is, the inner liner 50), which is fixed to the head He by the chin strap 90. When impact energy Ea acts on the shell 20, the liner 30 (i.e., the inner liner 50) remains in place while the shell 20 alone relatively rotates in the direction of the force, thereby absorbing the impact energy Ea."); Puchalski at 12:1-3 ("Although not essential, most preferably, the helmet chin straps 16 are secured to the peripheral edge of the inner panel 126, along each of its sides."); Field at 5:46-51 ("Inner helmet 40 is covered by a plastic surface or microshield 41 to facilitate movement of the head in the helmet. This lining surrounds inner pads 42, and incorporates chin strap 43, which functions to hold the inner helmet 40 in place relative to the wearer's head."); Nomiyama at 2:14-16 (in a helmet with sliding shells, stating that "a variety of well known paddings or safety straps can be installed within the inner shell to provide the wearer not only protection, but also comfort heretofore unobtainable in a safety helmet"). A POSITA seeking to develop or modify a helmet that already included layers that can slide relative to one another would thus have been motivated to, and would have found it obvious to incorporate a chin strap on the inner layer of a helmet.

Further, a POSITA would have been motivated to utilize a chin strap attached to an inner layer as a known configuration to keep the helmet on the head of the wearer without transferring the rotational force of impact to the head. This would have yielded predictable results, namely, sliding of the inner layer of the helmet relative to other layers to reduce rotational force to the head rather than transferring it to the head, improving the structural integrity and safety of the helmet.

Further, a POSITA would have found it obvious to try this combination of chin strap-to-layer connection because there were a finite number of combinations—namely, attaching a chin strap to an inner, an outer, or an intermediate layer—and a POSITA would have understood attaching the chin strap to the inner layer to have had the predictable effect of securing the inner layer of the helmet to the head while the outer layer is allowed to slide.

A POSITA would have had a reasonable expectation of successfully connecting a chin strap to the inner layer in a manner that maintained the ability of the inner layer to move relative to other layers of the helmet. Chin straps attached to inner layers were a common feature of helmets of the time, particularly in helmets incorporating sliding layers, and the chin straps had been taught as allowing the inner layer of a helmet to remain secure to the head while the outer layer is allowed to slide. Implementing such an attachment would have been a matter of routine for a POSITA, and an application of known design techniques to yield predictable results.

For example, a POSITA would have been motivated to combine the disclosure of a chin strap connected to an inner layer in Puchalski, Dotsuko, or Madey, or in the Lazer P-Nut MIPS, POC Trabec Race, Back on Track EQ2, Lazer Superskin, TSG Kraken, or Burton RED Hi-Fi Helmets, with any of the helmets allowing relative sliding disclosed by Weber, Ferrara 2006, Ferrara 2007, Hawkins, Von Holst, Halldin-I, Halldin-II, Halldin-III, or Kleiven. All references address the same problem as the challenged claims of reducing rotational acceleration on the brain during impacts with the head and similar solutions of providing multiple layers that can slide relative to one another, as discussed above. *See, e.g.*, Weber, [0002] (disclosing "protective helmets that protect the human head against repetitive impacts so as to significantly reduce the likelihood of both translational and rotational brain injury and concussions"); Kleiven, [0002] (directed to "an improved material/structure that reduces angular/rotational motion or acceleration of the human brain and body caused by oblique impact. In the material/structure, there is an inner layer and an outer layer and a separation between the inner layer and the outer layer by spikes that are constructed so that they permit displacement of the outer layer relative to the inner layer, hereby

reducing the force from an oblique impact."); Hawkins at [0006] (describing "[a] method of absorbing compression forces imparted to a surface by an impacting object in accordance with one exemplary implementation of a present invention includes converting at least some compression forces into shear forces while the object is in contact with the surface and imparting a rotational force to the object while the object is in contact with the surface"); Ferrara 2006 at [0005] (recognizing that currently marketed helmets "generally do not diminish the rotational forces experienced by the brain" and providing a solution of a middle layer that can "resiliently shear with respect to the inner layer in response to a tangential impact to the outer layer"); Puchalski at 12:55-58 (describing relative sliding between shell layers); Copeland at [0022-23] (describing foam members for shock absorption and additional comfort); Madey at [0024] ("[T]he present invention provides a means of diverting and/or absorbing tangential impact energy before that energy is translated to the wearer's head and neck."); Ferrara 2007 at [0086] (describing helmets with cells that "will shear relative to the inner layer 106 in response to tangential components of an impact, absorbing those components as well"); Dotsuko at [0006] ("The present invention addresses the problem of providing a technology that enables a helmet to be securely mounted on the head of an occupant and to efficiently absorb both impact energy in a direction perpendicular to the outer surface of the shell of the helmet and impact energy in a direction along the outer surface of the shell of the helmet.").

A POSITA would have found it obvious to combine these elements as a matter of routine implementation, as their combination is a straightforward and predictable combination of known elements according to known methods to yield predictable results, and the above chin straps are ready for improvement through incorporation into any of the above helmets. The known technique of using chin straps to secure the inner layer on the head while the helmet's outer layer moves would improve the above-mentioned helmets in similar ways as those disclosing such chin straps.

Puchalski, Dotsuko, Madey, and the Lazer P-Nut MIPS POC Trabec Race, Back on Track EQ2, Lazer Superskin, TSG Kraken, and Burton RED Hi-Fi Helmets all teach or disclose utilizing

a helmet with a chin strap on an inner liner, as discussed above and in their respective charts. Weber and Ferrara 2006 each describe and recognize the importance of utilizing chin straps for safe and optimal use of a helmet. Weber at [0038] ("Proper restraint on the wearer's head can be managed by, for example, a chin-strap and/or a neck security device of a type commonly used on conventional helmets."); Ferrara 2006 at [0034] ("[H]elmets of the invention can be constructed with various additional features, such as … retention straps, chin straps, and the like."). Von Holst, Halldin-I, Halldin-II, Hawkins, Ferrara 2007, and Kleiven do not explicitly discuss chin straps, but as discussed above, chin straps were ubiquitous in helmet design because of their benefits for operability and safety. Thus a POSITA reviewing these general helmet references as well as those describing chin straps generally would have immediately looked to teachings of chin straps to complement the disclosures of Weber, Ferrara 2006, Ferrara 2007, Von Holst, Halldin-I, Halldin-II, Halldin-III, Hawkins, or Kleiven.

As Puchalski, Dotsuko, and Madey recognize, the chin strap is most preferably placed on an inner layer that slides relative to an outer layer and that maintains its position relative to the wearer's head. Because the purpose of the chin strap is to secure the helmet for "[p]roper restraint on the wearer's head," Weber at [0038], placing it on the inner layer that conforms to the wearer's head would have been an obvious design choice to ensure that the helmet stays on when rotational impact causes the outer layer to slide. *See, e.g.*, Dotsuko, [0022]. A POSITA would have understood and expected that the other (small, finite set of) options, while available, may lead to less desirable arrangements. For example, attaching the chin strap to a different, movable layer would cause the chin strap to move with that layer, which risks harm to the user and/or may mean the strap no longer properly secures the helmet to the wearer's head. Placing a chin strap along the inner liners of a helmet in this preferable position thus would have further aided in ensuring proper, consistent fit with the wearer's head.

Further, a helmet's chin strap has a finite number of places in which it can be attached, such that there are a limited number of solutions with predictable results. It must be attached to a

structural feature, particularly one of the shell layers or liners, and there are only up to three possible layers: the inner, intermediate, or outer layer. A POSITA would have been motivated to try each of these limited options, and, in particular would have been motivated to attach the chin strap in Puchalski's and Dotsuko's preferred inner layer position to ensure a consistent, proper fit and position of the strap.

A POSITA would have had a reasonable expectation of success in modifying Weber, Ferrara 2006, Von Holst, Halldin-I, Halldin-II, Halldin-III, Hawkins, or Kleiven with Puchalski's, Dotsuko's, Madey's or the Lazer P-Nut MIPS, POC Trabec Race, Back on Track EQ2, Lazer Superskin, TSG Kraken, or Burton RED Hi-Fi Helmets' chin strap and location. POSITAs were well equipped to modify chin strap locations for specific helmet designs. For example, a POSITA would have understood how to implement chin straps into specific helmet designs and ensure, e.g., that outer layer of a helmet is connected strongly enough to the helmet to ensure integrity of the system without chin strap attachments on the outer layer. For example, as discussed above, Weber and Ferrara 2006 disclose a chin strap attached to the helmet without further implementation location details, and a POSITA would have, as a matter of routine implementation, been able to configure the chin strap to attach on the inner layer of any of the helmets in Weber, Ferrara 2006, Ferrara 2007, Von Holst, Halldin-I, Halldin-II, Hawkins, or Kleiven. Further, POSITAs recognized chin straps attached to the inner layer that conformed to the head in helmets as conventional across fields and particularly in helmets with layers that could slide relative to one another, as discussed above.

For another example, a POSITA would have been motivated to combine the disclosure in the Xenith X1 of a chin strap that is tightened to connect inner padding to the head through a cable with the disclosures in the Lazer P-Nut MIPS, POC Trabec Race, Back on Track EQ2, Lazer Superskin, TSG Kraken, and Burton RED Hi-Fi Helmets, Puchalski, or Dotsuko of attaching the strap directly to the inner layer. The Xenith X1 is designed so that the chin strap is connected to a cable, and when the chin strap is cinched it tightens the cable to firmly fit the inner liner to the

wearer's head. The Third Angle, *Xenith: Football Helmet Technology That Is Changing The Game For Athletes,* Third Angle Podcast (May 20, 2023), https://thirdanglepodcast.buzzsprout.com/1722287/episodes/12926164-xenith-football-helmet-technology-that-is-changing-the-game-for-athletes (RVST00001572-RVST00001578). The Xenith X1 is designed to address the problem of reducing rotational impact, with the solution being that "when an impact happens, the impact will happen with the shell, but the padding is connected to your head." *Id.* A POSITA would have recognized that connecting the chin strap directly to the inner layer would keep the layer firmly connected to the wearer's head to reduce that layer's movement on impact. The Lazer P-Nut MIPS, POC Trabec Race, Back on Track EQ2, Lazer Superskin, TSG Kraken, and Burton RED Hi-Fi Helmets each display a strap connected directly to the inner liner that has the ability to slide relative to the outer layer that would move on impact.

A POSITA would have had a reasonable expectation of success in attaching the chin strap directly to the inner layer, rather than through an internal cable system, because the POSITA would have known this is a simpler mechanical approach to maintaining the position of the inner layer on the head. To the extent Plaintiff contends that the prior art identified in the Exhibits as anticipating the claims does not disclose a chin strap connected to an inner layer, a POSITA would have found it obvious to incorporate such a chin strap and would have understood the benefits of doing so. As discussed in Section V, chin straps were ubiquitous in helmet design, *see, e.g.*, Newman at 51 ("Usually, the chin strap assembly is a major element of the retention system."), as was placing chin straps on the inner layers of helmets, *see, e.g.*, Field (US5,353,437), 2:51-52, 5:48-51; Mills-2006 169; Copeland 1991 (US5,129,108), Fig. 3; Nomiyama (US4,012,794), 2:30-31, 2:14-16; Goldman (US7,770,239), 1:19-32.

ii) Incorporating mechanical connections into sliding layers would have been an obvious feature of helmets allowing relative sliding and reducing rotational acceleration of the brain

To the extent Plaintiff contends that the prior art identified as anticipating the claims does not disclose the connection of layers, such as via mechanical connections (e.g., trusses or elastomeric connectors), to allow relative displacement/sliding a POSITA would have found obvious the modification of a helmet allowing relative sliding and reducing rotational acceleration of the brain to include such a connection. A POSITA would have been motivated to and found it obvious to physically connect layers with mechanical connections because doing so constituted utilizing a known structure to further reduce rotational acceleration of the brain during impact, to yield predictable results, and as a way of improving the structural integrity, and overall safety, of the helmet. Utilizing a plurality of mechanical connections between layers configured to move/slide relative to one another was well known before 2011. *See, e.g.*, Halldin-II; Weber; Kleiven; Ferrara 2006; Ferrara 2007; Madey; Hawkins; Dotsuko; Halldin-III.

Further, a POSITA would have been motivated and found it obvious to incorporate mechanical connections between layers configured to move/slide relative to one another because there were a finite number of predictably successful solutions to the problem of connecting such layers and permitting relative sliding between them in the manner the Asserted Patents discuss. For example, a POSITA would have the choice of providing mechanical connection element(s) at the periphery, e.g., at single points at the exterior of the helmet, or at multiple internal points, including within the sliding layers. A POSITA would have been motivated to incorporate multiple of such internal attachment points because they would protect against failure of one or more attachment points and also for additional energy absorption and dissipation throughout the helmet as force is imparted on the connecting members.

Further, a POSITA would have had a reasonable expectation of successfully incorporating such internal fixations as described in the above references in a layered helmet. As discussed above, including mechanical connectors between sliding layers was well known in the field of helmet design. A POSITA would have had a reasonable expectation of successfully including additional internal physical fixation in a helmet because it was a predictable matter of routine

design and implementation, including, for example, through use of typically used adhesives or attachment techniques.

For example, Halldin-II teaches a helmet with an outer shell connected to an attachment device by "fixation members." Halldin-II, [0013]. Halldin-II teaches multiple types of fixation members, including members 4a-4d that "absorb energy by deforming in an elastic, semi-elastic or plastic way." Halldin-II, [0043], Fig. 3.

Each of Halldin-II's fixation members connects layers of the helmet while (1) absorbing energy and (2) allowing relative sliding between the layers. Figures 2 and 3 teach fixation members 4a and 4b. *Id.*, [0047] (Figure 3, with fixation members, allows "energy absorbing layer 2 to slide in relation to the attachment device 3" and "[t]he fixation absorbs the rotational forces by deforming elastically or semi-elastically), Figs. 2-3 (outer layer 2 connected at portion 9 and inner attachment device 3 connected at portion 8):

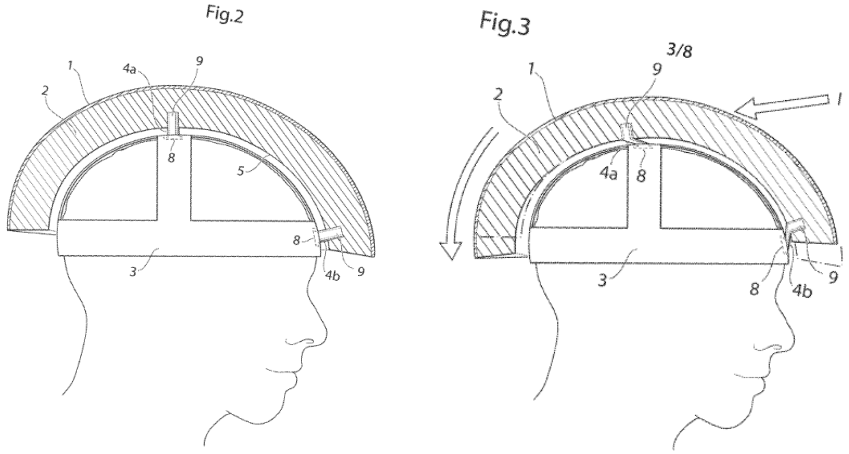

Halldin-II, Figs. 2, 3.

A POSITA would have been motivated to modify, for example, Von Holst to incorporate Halldin-II's fixation members. Von Holst and Halldin-II (which share a common inventor) are

analogous to the Asserted Claims: both are directed to the same field of endeavor (helmet safety design), and both address the same problem of improved helmet sliding mechanisms. Von Holst describes layers connected through transformer layers and a connecting member, and the later-filed Halldin-II teaches additional ways to connect layers while maintaining desired sliding to address impact forces. A POSITA would have been motivated to include Halldin-II's fixation connections, which not only connect layers but additionally "absorb energy" by "deforming," Halldin-II, [0043], which would supplement the energy absorption achieved by Von Holst's sliding layers 4.

Furthermore, a POSITA would have been motivated to use Halldin-II's internal connections (i.e., members 4a-d) instead of or in addition to Von Holst's peripheral connecting member 5. Halldin-II teaches that a POSITA would have known that fixation on the periphery and internal fixation are alternatives that could be used separately or together. *See* Halldin-II, [0057], Fig. 11, [0064] (discussing combination of "master fixation member" and "additional fixation members"). A POSITA would have been motivated to improve Von Holst by adding internal fixation connections to increase the degree of connection throughout the helmet and provide additional mechanisms to absorb energy. A POSITA would have found it obvious to combine these elements as a matter of routine implementation, as their combination is a straightforward and predictable combination of known elements according to known methods to yield predictable results. Von Holst's helmet with sliding layers is ready to be improved by incorporating a layer of internal fixation members that absorbs additional energy. The known technique from Halldin-II of using fixation members to create a connecting layer and absorb energy would improve Von Holst's helmet in a similar way to Halldin-II's helmet.

A POSITA would have a reasonable expectation of success in modifying Von Holst as described. It is easy to apply aspects of Halldin-II's helmet design to Von Holst. Where Von Holst describes sliding layers, Halldin-II describes a "sliding facilitator 5 [Fig. 2] [that] may be a low friction material," which "is provided on outside of the attachment device 3 facing the energy

absorbing layer 2" or, alternatively, "on the inside of the energy absorbing layer 2." Halldin-II, [0044]. Halldin-II emphasizes that its fixation members are not useable only with the specific attachment device embodiments in its specification, but instead would have been readily adaptable to other designs, like Von Holst's helmets, as a matter of routine implementation within the skill of a POSITA: "In other embodiments the attachment device 3 could be … any other design functioning as an attachment device for mounting on a wearer's head." Halldin-II, [0050]. For example, Halldin-II teaches fixation members attached to the outer energy absorbing layer via an "adhesive." Halldin-II, [0052]. Thus, a POSITA would have reasonably expected to be able to implement Halldin-II's fixation members to connect Von Holst's intermediate shell layer to the outer shell.

As another example, a POSITA would have been motivated to combine the helmet of Halldin-I with the connection of layers by fixation members of Halldin-II with a reasonable expectation of success. In addition to the reasons discussed above with Von Holst, both references address the same problem of reducing rotational acceleration on the brain during impacts with the head. Halldin-I, 3:7-11; Halldin-II, [0005], [0047]. Both references also disclose the same solution to that problem: helmets allowing relative sliding to reduce rotational acceleration on the brain during impacts with the head. Halldin-I, 1:5-6, 2:34-35 (disclosing "a protective helmet with an outer shell and an inner shell" such that "the outer shell of the helmet can be displaced relative to the inner shell."); Halldin-II, [0001] (disclosing "a helmet comprising an energy absorbing layer, with or without any outer shell, and a sliding facilitator being provided inside of the energy absorbing layer."). Moreover, both references name the same inventor.

Additionally, Halldin-I describes that its connections are limited to being placed peripherally "where the probability of an application of an outer force is low." Halldin-I, [00014]. Later-filed Halldin-II addresses this limitation by allowing connection at numerous points within the helmet.

Halldin-II's fixation members provide an optimized connection mechanism over Halldin-I, removing the need for flaps outside of the helmet and allowing more points of connection throughout the helmet. For example, Halldin-I states that "[i]n order to further fix the intermediate layer into place it may also be attached to both of the movable layers at a peripheral edge of the intermediate layer. Preferably, the attachment is made at a part of the structure where the probability of an application of an outer force is low." Halldin-I [00014]. Halldin-I thus poses a design limitation, wherein the connection mechanisms must be placed in specific points, such as the periphery, and was ready for improvement. Halldin-II, which was filed later with a common inventor, recognizes that the connection ***could*** be at the periphery, *see* Halldin-II [0057] ("Fig. 11 shows an embodiment in which the attachment device 3 is fixated to the energy absorbing layer 2 ***at the periphery*** thereof by means of a membrane or sealing foam 24, which could be elastic or adapted for plastic deformation."), but only as one of several alternatives, most of which provide connection mechanisms throughout the helmet. A POSITA would have found it obvious to combine these elements as a matter of routine implementation, as their combination is a straightforward and predictable combination of known elements according to known methods to yield predictable results, and Halldin-I's helmet with sliding layers is ready for improvement through incorporation of a layer of internal fixation members that additionally absorbs energy. The known technique of using fixation members from Halldin-II to create a connecting layer and absorb energy would improve Halldin-I's helmet in a similar way to Halldin-II.

A POSITA would also have had a reasonable expectation of success in modifying Halldin-I as described for similar reasons as with Von Holst. In addition, it is easy to apply aspects of Halldin-II's helmet design to Halldin-I. Halldin-II describes a "sliding facilitator 5 [Fig. 2] [that] may be a low friction material," which "is provided on outside of the attachment device 3 facing the energy absorbing layer 2" or, alternatively, "on the inside of the energy absorbing layer 2." Halldin-II [0044]. Halldin-II's low-friction layer also has certain similarities with that of Halldin-I, including having a fiber structure. *Compare* Halldin-II [0040] ("If it furthermore conceivable

that the sliding is enabled by the structure of the material, for example by the material having a fiber structure such that the fibers slide against each other.") *with* Halldin-I [0004] ("The low friction material comprises fibers. By using fibers as a friction decreasing material the friction between the layers can be decreased."). Halldin-II also teaches multiple ways in which its various embodiments of fixation members could be implemented to connect Halldin-I's intermediate shell layer to the outer shell via the sliding layer. *See, e.g.*, Halldin-II [0042-43], [0052-56]. Halldin-II also emphasizes that its fixating members are not useable only with the specific attachment device embodiments in the specification: "In other embodiments the attachment device 3 could be … any other design functioning as an attachment device for mounting on a wearer's head."). Thus, a POSITA would have reasonably expected to be able to readily implement Halldin-II's fixation members to connect through Halldin-I's sliding layer and connect Halldin-I's intermediate shell layer to the outer shell (and or to the inner shell).

Additionally, a POSITA would not have been limited to the fixation members of Halldin-II, but would have found other fixation members obvious as well. A POSITA could utilize the teachings of Halldin-II to identify alternative connection mechanism(s) that would have provided mechanical connections for stability while also absorbing energy via deforming and facilitating sliding. For example, A POSITA would have similarly been motivated to modify Von Holst or Halldin-I by incorporating mechanical connection elements of Ferrara 2006 or Dotsuko. Each reference describes physical connections similar to Halldin-II. For example, Ferrara discloses protective headgear with "an outer layer 20′, an inner layer 28′", and a middle layer comprising a plurality of independent compressible members 50′ and optionally fluid such as liquid or air in interstitial region 52′ disposed between the inner and outer layers 28′, 20′. Ferrara 2006, [0053].

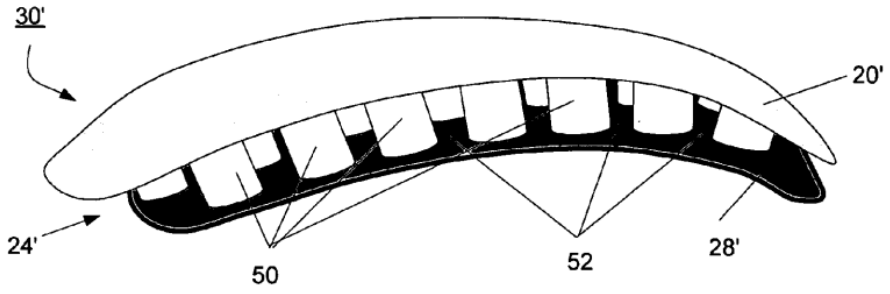

FIG. 4

Ferrara 2006, FIG. 4.

Ferrara 2006's members 50 "compress or shear independently" and "have a resilient, compressible solid or foam construction." Ferrara 2006, [0053]. This connection via members "enables the outer layer to move during impact independently of the inner layer in a scalp-like fashion." Ferrara 2006, [0056]; *see also id.*, [0032] ("respond to an impact by…rotating by the outer layer and the energy-absorbing layer with respect to the inner layer.").

Similarly, Halldin-III (which also shares a common inventor with Von Holst and Halldin-I) discloses a locking device for use in a helmet with sliding layers such as that described in EP-A1-1246548 (the European counterpart to Von Holst). Halldin-III at [0012-13]. The locking device has a "lower portion of the layer-guiding member 10 [that] can be elastic in its longitudinal direction L and in the direction of propagation plane P of the inner layer and the outer layer 4, 6."

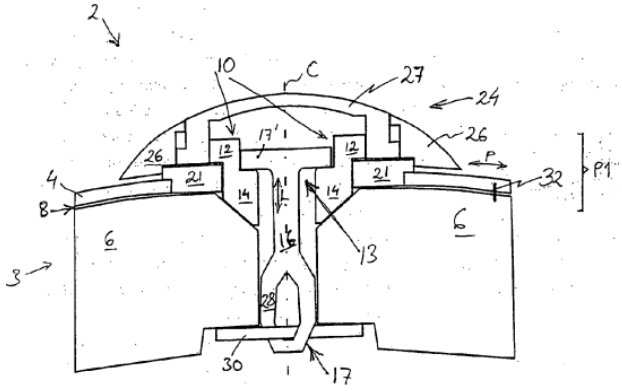

FIG. 1A

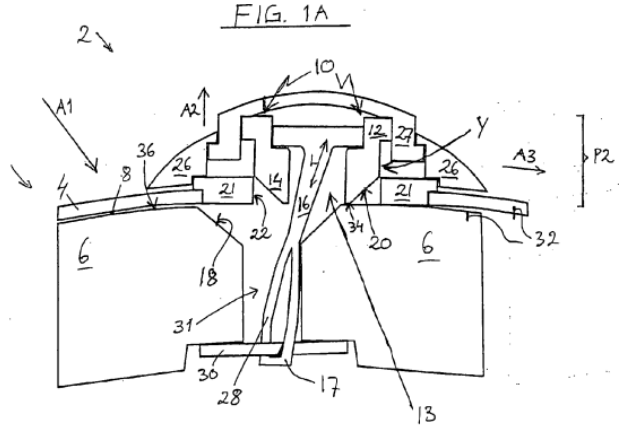

FIG. 1B

Halldin-III at [0021], Figs. 1A-B.

Similarly, Dotsuko discloses a helmet with an inner liner 50 connected to liner 40 and outer shell 20 with liner 30 comprising a plurality of elastic straps and an elastic body disposed between the inner and outer layers.

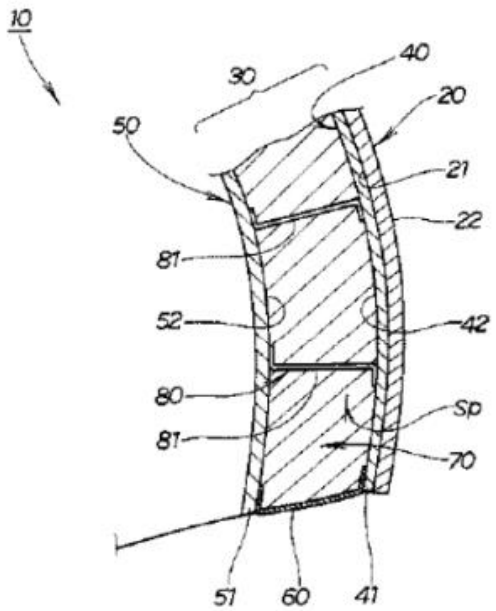

Dotsuko, [0013], [0017].

A POSITA would have been motivated to modify Von Holst's and/or Halldin-I's sliding layers to additionally include Ferrara 2006's or Dotsuko's compressible members and elastic straps with a reasonable expectation of success for similar reasons as with Halldin-II. Additionally, Ferrara 2006's compressible members would readily fit into Von Holst's and Halldin-I's sliding layer: Ferrara 2006's members can vary in lengths, and "the outer layer 20′ and inner layer 28′ approach and may touch each other so that any gap between the layers 20′, 28′ either is imperceptible or does not exist." Ferrara 2006 at [0056]. And further with respect to Von Holst, given that Ferrara 2006 further utilizes fluids, similar to Von Holst, a POSITA would have been motivated to incorporate members similar to those used in Ferrara 2006 to provide additional connection points throughout the sliding layer for stability and energy absorption while still "enabl[ing] the outer layer to move during impact independently of the inner layer in a scalp-like fashion." Ferrara 2006 at [0056].

Similarly, Halldin-III's locking device is expressly described as fitting within a helmet similar to Von Holst, and which is has similar key features as Halldin-I's helmet (e.g., and outer and inner layer with a sliding layer that may include, for example, "[t]eflon, oil, air or the similar.") Halldin-III recognizes various advantages of its device by which a POSITA may be motivated to incorporate it into Von Holst or Halldin-I, including a design where "the energy-absorbing properties of the protective helmet only are activated when the helmet is subjected to oblique impacts that exceed a certain power" and one where it is easier to tell "if a displacement of the layers has taken place and the energy-absorbing function has been released, whereby the helmet is consumed" and must be replaced. Halldin-III at [0007-8]. A POSITA would thus have been motivated to incorporate Halldin-III's locking device into either Von Holst or Halldin-I, and they would have had a reasonable expectation of successfully doing so for similar reasons as described above.

Similarly, Dotsuko describes an additional connection mechanism via "multiple straps 81 … made of an elastic material such as rubber. As these strap 81 [] have certain elongation properties, they allow a certain degree of relative rotation of the shell 20 and the outer liner 40 with respect to the inner liner 50, while preventing excessive relative rotation beyond this range." Dotsuko at [0017]. Dotsuko's elastic straps thus perform a similar function as Von Holst's and Halldin-I's periphery connecting members, which counteract mutual displacement among the sliding layers and deform to absorb energy, but provides multiple points over which energy may be absorbed via deformation. A POSITA would thus have been motivated to incorporate Dotsuko's elastic straps into either Von Holst or Halldin, and they would have a reasonable expectation of success in doing so for similar reasons as described above.

As another example, a POSITA would have been motivated to modify the energy absorbing layers of the Schutt Ion 4D helmet to include sliding layers operable to absorb rotational and shear forces as disclosed in the TSG Kraken and POC Trabec. The Schutt Ion 4D is designed to absorb energy by flexing. G. Alston Rush et al., *Modified Drop Tower Impact Tests For American*

Football Helmets, J. Visualized Experiments (120):53929 (Feb. 19, 2017), https://pmc.ncbi.nlm.nih.gov/articles/PMC5407596/ (RVST00002711-RVST00002733). The POC Trabec and TSG Kraken are designed to reduce rotational force to the brain through a liner designed to slip on impact. Bicycle Helmet Safety Institute, *Bicycle Helmets for the 2010 Season*, Helmets.org (Feb. 5, 2010), https://web.archive.org/web/20100205103230/http:/www.helmets.org:80/ helmet10.htm (RVST00001316-RVST00001411). Thus, a POSITA would have been motivated to improve the Schutt Ion 4D's reduction of impact forces by including the slidable layers in the POC Trabec and TSG Kraken in order to ensure the helmet could absorb rotational and shear forces.

A POSITA would have a reasonable expectation of success in modifying the Schutt Ion 4D helmet to include slidable layers because it already includes an intermediate flexible layer that allows movement to reduce impact forces.

iii) A lining layer that conforms to the human head would have been an obvious feature of helmets allowing relative sliding and reducing rotational acceleration of the brain

To the extent Plaintiff contends that the prior art identified as anticipating the claims does not disclose a lining layer that conforms to the human head, a POSITA would have found obvious the modification of a helmet allowing relative sliding and reducing rotational acceleration of the brain to include such a lining layer. A POSITA would have found it obvious to include a lining layer because doing so constitutes utilizing a known structure to improve the comfort and safety of another known safety structure, to yield predictable results, and because a POSITA would have understood that doing so would improve comfort, fit, security of the inner layer on the head, and increase the reduction of rotational acceleration of the brain.

A POSITA would also have had a reasonable expectation of success that a lining layer could be incorporated and that the comfort and safety of the helmet would be improved because liner layers conforming to the human head were known features of almost all commercially

successful helmets of the time that had been demonstrated to create lightweight, strong, and comfortable lining layers that connect the helmet with the head, thus improving comfort and safety. As discussed in Section V, foam comfort liners are standard in most modern helmets. *See, e.g.*, Newman at 47 ("Modern (i.e. post 1975) cycling helmets have typically used small polyester foam pads that can be strategically placed inside the helmet by the wearer to accommodate different head shapes and sizes."); Bosch, 2 ("The purpose of the comfort padding liner is to increase the wearing comfort of the helmet and to provide a good fit on the head. It consists of low-density, flexible, open-celled, polyurethane or PVC foams and is often faced with a cloth layer."); Weber at [0045] (helmet contains "a 'comfort' liner 123 configured to closely surround the head of the wearer"), [0036], [0050]; Piper at [0109] (disclosing a "comfort liner 212 next to the head 200 of the wearer" that is, e.g., "lower density, open-cell foam material that easily conforms to the head"); Von Holst at 4:26-29 (describing an inner shell 3 with softer inner layer 3' "made of … polyurethane foam"); Puchalski at 1:52-55 (a "padding or cushioning may also be provided along the inside of the shell for increased comfort, better fit and to assist in the absorption of any impact forces"), cl. 9; Ferrara 2006 (US2006/0059606) at [0060] ("[I]n FIG. 6, a compressible (e.g., foam) internal liner 32′ can then be added (step 80) to the multilayer shell 30′….The shape of the internal liner 32′ conforms to the general shape of the shell 30′ and to the shape of a wearer's head."); Copeland (US2006/0070170) at [0022-23] (describing "[a] shock absorber insert 18 [] received in … recesses" that "includes a foam member 19"), cl. 17, Fig. 2); Ferrara 2007 (US2007/0190293) at [0101] ("Therefore, the bellows capsules as a whole provide a relatively soft and comfortable inner liner next to the wearer's head."); Madey at [0025] ("Helmet 40 comprises an inner helmet layer (e.g., an energy-absorbing layer) 41, a helmet retention system (e.g., straps 42 and foam padding inserts, not shown) to affix inner helmet layer 41 to a wearer's head…."); the POC Trabec Race, POC Receptor Backcountry MIPS, POC Cortex DH, Xenith X1, the TSG Kraken, Burton RED Hi-Fi, Lazer Superskin, and Back on Track EQ2 helmets.

A POSITA would have understood that user comfort is a critical feature for helmet uptake and usability and that comfort padding/liners that conform to the human head provide such comfort. Thus, a POSITA viewing a disclosure that does not expressly describe a comfort padding/lining layer would have been motivated and would have found it obvious to look to other references to incorporate this feature. The reasons for this were well established in the art. For example, comfort liners were described as providing general comfort and also improving fit for users, in addition to being configured to closely secure the helmet inner layers to the wearer in helmets with layers allowing for relative sliding. Madey at [0025] ("Helmet 40 comprises an inner helmet layer (e.g., an energy-absorbing layer) 41, a helmet retention system (e.g., straps 42 and foam padding inserts, not shown) to affix inner helmet layer 41 to a wearer's head…."); Weber at [0045] (describing "a 'comfort' liner 123 configured to closely surround the head of the wearer"); *see also id.* at [0036], [0050]. In addition, foam-based comfort liners were understood to "easily comform[] to the head" and "provide[] sweat and heat management characteristics." Piper at [0109]. A POSITA would have been motivated to incorporate a comfort liner such as that described in Piper into other helmets to provide comfort, improve fit, and achieve heat and sweat management. A POSITA would have understood that reducing heat by using a foam comfort liner would also enhance helmet safety by: (1) reducing risks of heat stress for the user and (2) increasing helmet use on hot days, when users might otherwise find it too uncomfortable to wear.

A POSITA would further have been motivated and found it obvious to include a lining layer that conforms to the human head because there were a finite number of predictably successful solutions to the problem of creating a flexible, comfortable, lining layer that connects to the head while reducing heat and managing stress, of which comfort liners, and specifically foam comfort liners, were one. Using lining layers in helmets would have constituted utilizing a known structure in a known way to yield predictable results. As discussed above, foam-based comfort liners/lining layers were standard in modern helmets, and indeed comfort liners/lining layers in general were

standard in helmet design before 2011. A POSITA would have a finite number of choices of whether to include a lining layer at all (either including one or not including one) as well as what material to use (foam-based materials covered in fabric are a near universal material), and implementing a foam-based lining layer would have yielded predictable results of improved comfort and safety.

A POSITA would have had a reasonable expectation of success of incorporating a comfort liner/lining layer in a helmet of any of the references identified herein. As discussed above, liners were standard in modern helmets, and a POSITA would thus already know how to incorporate such liners into other helmets. Indeed, Ferrara 2006 teaches how a POSITA might incorporate such a helmet. Ferrara 2006 at [0060] (describing FIG. 6) ("The internal liner 32′ is attached (e.g., with an adhesive) to an internally facing surface of the inner layer 28′. The shape of the internal liner 32′ conforms to the general shape of the shell 30′ and to the shape of a wearer's head."). A POSITA would also have understood, as a matter of routine implementation, that there were also alternative ways to incorporate such comfort liners/lining layers, such as with various fixations (e.g., snap fixation) or by incorporating them into recesses within an inner layer (*see, e.g.*, Copeland at [0022-23]).

For example, a POSITA would have been motivated to combine the comfort liner/lining layer of Piper, Ferrara 2006, Ferrara 2007, Puchalski, Copeland, or Madey, or of the POC Trabec Race, POC Receptor Backcountry MIPS, POC Cortex DH, Xenith X1, the TSG Kraken, Burton RED Hi-Fi, Lazer Superskin, and Back on Track EQ2 helmets with the helmets of at least, e.g., Weber, Kleiven, Hawkins, Ferrara 2007, Halldin-II, Halldin-III, Madey, Puchalski, Von Holst, Halldin-I, or Dotsuko, or with the Lazer P-Nut or TSG Kraken helmet. Each is analogous art to the claims of the Asserted Patents. All references address the same or similar problem as the Asserted Patents, such as reducing rotational acceleration on the brain during impacts with the head or shearing in response to impacts. *See, e.g.*, Weber, [0002] (disclosing "protective helmets that protect the human head against repetitive impacts so as to significantly reduce the likelihood

of both translational and rotational brain injury and concussions"); Kleiven, [0002] (directed to "an improved material/structure that reduces angular/rotational motion or acceleration of the human brain and body caused by oblique impact. In the material/structure, there is an inner layer and an outer layer and a separation between the inner layer and the outer layer by spikes that are constructed so that they permit displacement of the outer layer relative to the inner layer, hereby reducing the force from an oblique impact."); Hawkins at [0006] (describing "[a] method of absorbing compression forces imparted to a surface by an impacting object in accordance with one exemplary implementation of a present invention includes converting at least some compression forces into shear forces while the object is in contact with the surface and imparting a rotational force to the object while the object is in contact with the surface"); Ferrara 2006 at [0005] (recognizing that currently marketed helmets "generally do not diminish the rotational forces experienced by the brain" and providing a solution of a middle layer that can "resiliently shear with respect to the inner layer in response to a tangential impact to the outer layer"); Piper, [0002] (disclosing "protective headgear intended to reduce angular acceleration of the human brain caused by an impact . . . ."); Piper, [0005] ("Acceleration along an arc is called angular or rotational acceleration."); Puchalski at 12:55-58 (describing relative sliding between shell layers); Copeland at [0022-23] (describing foam members for shock absorption and additional comfort); Madey at [0024] ("[T]he present invention provides a means of diverting and/or absorbing tangential impact energy before that energy is translated to the wearer's head and neck."); Ferrara 2007 at [0086] (describing helmets with cells that "will shear relative to the inner layer 106 in response to tangential components of an impact, absorbing those components as well"); Halldin-II at [0042-43] (describing a helmet with an outer and inner layer, a sliding facilitator, and fixation members for "providing slidability"); Halldin-III at [Abstract] (describing an improved locking device and helmet "for facilitating displacement of the outer layer relatively the inner layer during an oblique impact towards the protective helmet"); Dotsuko at [0006] ("The present invention addresses the problem of providing a technology that enables a helmet to be securely mounted on the head of an

occupant and to efficiently absorb both impact energy in a direction perpendicular to the outer surface of the shell of the helmet and impact energy in a direction along the outer surface of the shell of the helmet.”).

A POSITA would have found it obvious to combine these elements as a matter of routine implementation, as their combination is a straightforward and predictable combination of known elements according to known methods to yield predictable results, and the above comfort liners/lining layers are ready for improvement through incorporation into any of the above helmets. The known technique of using comfort liners to improve fit, comfort, and heat management would improve the above mentioned helmets in similar ways as those disclosing comfort liners.

As one example, Weber discloses “a ‘comfort’ liner 123 configured to closely surround the head of the wearer,” Weber, [0044-0045], but it does not include additional details regarding such comfort liner. Piper (for example) provides those details, including its materials (e.g., “lower-density, open-cell foam material”) and its characteristics (“provides sweat and heat management characteristics”). Piper, [0109]. Similarly, Ferrara 2006 describes how “a compressible (e.g., foam) internal liner 32′ can then be added (step 80) to the multilayer shell 30′. FIG. 6 shows a cross-section of a portion of the shell 30′ and of the internal liner 32′. The internal liner 32′ is attached (e.g., with an adhesive) to an internally facing surface of the inner layer 28′. The shape of the internal liner 32′ conforms to the general shape of the shell 30′ and to the shape of a wearer's head.” Ferrara 2006 at [0060]. Similarly, Puchalski states that “padding or cushioning may also be provided along the inside of the shell for increased comfort, better fit and to assist in the absorption of any impact forces.” Puchalski at 1:53-55. Copeland also describes how a helmet has inserts “include[ing] a foam member,” which is “manufactured from a softer foam material than base 12 for additional comfort.” Copeland at [0023]. And Madey describes how a “[h]elmet 40 comprises an inner helmet layer (e.g., an energy-absorbing layer) 41, a helmet retention system (e.g., straps 42 and foam padding inserts, not shown) to affix inner helmet layer 41 to a wearer’s head….” Madey at [0025]. A POSITA would have been motivated to modify Weber’s helmet to

incorporate a more-specific foam comfort liner as described in Piper, Ferrara 2006, Puchalski, Copeland, or Madey to achieve comfort, fit, and heat and sweat management. A POSITA would have found it obvious to combine these elements as a matter of routine implementation, as it is a straightforward and predictable combination of known elements according to known methods to yield predictable results, and Weber's general comfort liner is ready for improvement through incorporation of Piper's, Ferrara 2006's, Puchalski's, Copeland's, or Madey's liner. This known technique of adding a user comfort layer would improve Weber's helmet in a similar way to Piper or Ferrara 2006.

Further, a POSITA would have had a reasonable expectation of success in combining the comfort liner/lining layer of Piper, Ferrara 2006, Puchalski, Copeland, or Madey with the helmet of Weber because such comfort liners were a known structure that had been demonstrated to improve safety and comfort, including heat and sweat management. Additionally, Ferrara 2006 expressly provides teachings on how a lining layer could be incorporated into a helmet, Ferrara 2006 at [0060], as does Copeland, Copeland at [0022-23], and a POSITA would have reasonably expected to be able to incorporate a lining layer into Weber in a similar way.

For another example, a POSITA would have been motivated to combine the comfort liner of Piper, Ferrara 2006, Puchalski, Copeland, or Madey with the helmet of Kleiven. Each is analogous art to the claims of the Asserted Patents. As with the claims of the asserted patents, Kleiven addresses the problem of reducing rotational acceleration on the brain during impacts with the head. Kleiven is directed to the field of "a material/structure that protects the head and body in a collision or against other types of impact. Specifically, it relates to an improved material/structure that reduces angular/rotational motion or acceleration of the human brain and body caused by oblique impact." Kleiven, [0002]. Kleiven also addresses that problem in the same way as the claims of the asserted patents, by allowing relative sliding to reduce rotational acceleration on the brain during impacts with the head. Kleiven, [0002] ("In the material/structure, there is an inner layer and an outer layer and a separation between the inner layer and the outer

layer by spikes that are constructed so that they permit displacement of the outer layer relative to the inner layer, hereby reducing the force from an oblique impact.”).

A POSITA would have been motivated to combine Kleiven’s helmet with Piper’s, Ferrara 2006’s, Puchalski’s or Copeland’s comfort liner for all the reasons described above. Further, Kleiven recognizes that foam on the interior of a helmet can “improve[] the capacity of the headgear to conform to the head.” Kleiven, [0014]. This would have motivated a POSITA to look to disclosures of such interiors in helmets, especially such disclosures that solve the same problem. Piper’s comfort liner is also positioned under an inner layer similar that disclosed in Kleiven, further motivating a POSITA to combine the two. As discussed above, a POSITA would also have reasonably expected success due to these similarities and for additional reasons: comfort layers/lining layers were standard in helmets, and Piper’s, Ferrara 2006’s, Puchalski’s, Copeland’s, or Madey’s comfort liner would easily fit into Kleiven’s design. A POSITA combining these references would also reasonably expect success because such comfort liners were a known structure that had been demonstrated to improve safety and comfort, including heat and sweat management, including all the reasons described above, and addition of such a foam liner would have been a matter of predictable and routine implementation within the knowledge and skill of a POSITA.

As another example, a POSITA would have been motivated to combine Hawkins’ helmet with Piper’s, Ferrara 2006’s, Puchalski’s, Copeland’s, or Madey’s comfort liner for all the reasons previously described. Further, Hawkins describes a helmet with “machine elements” and matrix material (such as fluids) that can shear and cause relative sliding in response to impact forces may “be stacked so that there will be more than one layer of machine elements.” Hawkins at [0050], [0053]; [0048]. Although Hawkins does not expressly describe a foam-based comfort lining/lining layer, a POSITA would have been motivated to incorporate such a comfort liner from Piper, Ferrara 2006, Puchalski, Copeland, or Madey in Hawkins’ helmet. Hawkins describes the specifics of its force diversion apparatus in detail across multiple implementations, but it does not

provide further detail on other components of a helmet. A POSITA reading Hawkins would have understood that comfort liners/lining layers to conform to a head are desirable and ubiquitous in helmet design and would thus look to references such as Piper, Ferrara 2006, Puchalski, Copeland, or Madey for teachings on how to incorporate this feature. A POSITA would also have reasonably expected success in incorporating a foam-based comfort liner/lining layer into Hawkins for the same or similar reasons as described above.

As another example, a POSITA would have been motivated to combine Ferrara 2007's helmet with Piper's, Ferrara 2006's, Puchalski's, or Copeland's comfort liner for all the reasons previously described. Ferrara 2007 describes a helmet with "cells" that can "shear relative to the inner layer 106 in response to tangential components of an impact, absorbing those components as well." Ferrara 2007 at [0086]. Ferrara 2007 describes lining layers in various embodiments, *e.g.*, Ferrara 2007 at [0097] (inner components "together form a conformable inner liner"), but it does not expressly describe this feature in all embodiments or specify that the inner liner is foam. A POSITA would thus have been motivated to look to other references such as Piper, Ferrara 2006, Puchalski, or Copeland to identify other implementations of comfort liners and materials to use for such comfort liners. As discussed above, a POSITA would also have reasonably expected success due to these similarities and for additional reasons: comfort layers/lining layers were standard in helmets, and Piper's, Ferrara 2006's, Puchalski's, Copeland's, or Madey's comfort liner would easily fit into Ferrara 2007's design. A POSITA combining these references would also reasonably expect success because such comfort liners were a known structure that had been demonstrated to improve safety and comfort, including heat and sweat management, including all the reasons described above, and addition of such a foam liner would have been a matter of predictable and routine implementation within the knowledge and skill of a POSITA.

As another example, a POSITA would have been motivated to combine Dotsuko's helmet with Piper's, Ferrara 2006's, Puchalski's, or Copeland's comfort liner for all the reasons previously described. Dotsuko describes a helmet with multiple protective layers that can

move/slide relative to one another, but it does not expressly discuss a foam comfort liner/liner layer. As discussed above, foam comfort liners/liner layers were standard across all fields of helmets, including motorcycle/racing helmets which Dotsuko discusses. A POSITA would have been motivated to incorporate such a comfort liner from Piper, Ferrara 2006, Puchalski, Copeland, or Madey in Dotsuko's helmet. A POSITA reading Dotsuko would have understood that comfort liners/lining layers to conform to a head are desirable and ubiquitous in helmet design and would thus look to references such as Piper, Ferrara 2006, Puchalski, Copeland, or Madey for teachings on how to incorporate this feature. A POSITA would also have reasonably expected success in incorporating a foam-based comfort liner/lining layer into Dotsuko for the same or similar reasons as described above.

As another example, a POSITA would have been motivated to combine the Lazer P-Nut, Schutt Ion 4D, or Schutt DNA Pro Plus helmets with Piper's, Ferrara 2006's, Puchalski's, Copeland's, or Madey's Ferrara comfort liner for all the reasons previously described. A POSITA would also have been motivated to combine the Lazer P-Nut, Schutt Ion 4D, or Schutt DNA Pro Plus helmets with the foam liners disclosed in the POC Trabec Race, POC Receptor Backcountry MIPS, POC Cortex DH, Xenith X1, the TSG Kraken, Burton RED Hi-Fi, Lazer Superskin, and Back on Track EQ2 helmets, for the reasons described, including that a POSITA would have known these foam-based comfort liners are a common and desirable helmet design element. A POSITA would have had a reasonable expectation of success because comfort liners of this type were a known structure for improving safety and comfort and their inclusion would have been a predictable matter of routine implementation for a POSITA.

iv) <u>Using different types of materials for helmet layers to create shell layers would have been an obvious feature of helmets to reduce forces on the head and brain and provide safety</u>

To the extent Plaintiff contends that the prior art identified as anticipating the claims does not disclose an outer or inner "shell layer," it would have been obvious to use shell layers. At least

Weber, Von Holst, Halldin-I, Halldin-II, Halldin-III, Kleiven, Hawkins, Ferrara 2006, Ferrara 2007, Dotsuko, Madey, Nichols, Puchalski, the POC Trabec Race, the POC Receptor Backcountry MIPS, the POC Cortex DH, the Schutt Ion 4D Helmet, the Schutt DNA Pro Plus, the TSG Kraken, and the Burton RED Hi-Fi- Helmet all disclose two or more distinct protective layers that move/slide relative to one another in the manner the patent discusses. *See, e.g.*, '635 patent at 11:3-12 (discussing that outer, middle, and inner "shells" "may vary in weight and strength," and "may" have certain characteristics); *id.* at 7:58-8:3 (describing materials for shell layers "may" include "plastics, resins, metal, composites," as well as other materials, i.e., "etc"). Additionally, Von Holst expressly describes each of its protective layers as "shells." *See, e.g.*, Von Holst at 6:2-12. Similarly, Nichols describes a helmet with three shell layers. Nichols at Fig. 6 (depicting shells 32 and 31 as well as a third shell in the form of helmet 12); *id.* at cl. 1 ("protective headgear adapted to fit over a hard shell football helmet…."). To the extent Plaintiff contends that the claimed "shell layer" requires a layer made of a particular material or shape to prevent injury and/or absorb energy, a POSITA would have been motivated to modify Weber, Von Holst, Halldin-I, Halldin-II, Halldin-III, Kleiven, Hawkins, Ferrara 2006, Ferrara 2007, Dotsuko, Madey, Nichols, or Puchalski to include any material and/or shape to have the helmets' layers be "shell layers" based on Nichols or Von Holst. A POSITA would have found it obvious to combine these elements as a matter of routine implementation, as it is a straightforward and predictable combination of known elements according to known methods to yield predictable results, and the above-mentioned helmets' layers are ready for improvement through incorporation of "shells" as described in Von Holst, Nichols, or the state of the art to reduce the forces on the head and brain, including penetrating forces, and to provide safety. Design modifications often require tradeoffs and material selection for hardness, shape, and the ability to absorb/dissipate energy from an impact would have been within a POSITA's skill set as of the priority date. This known technique of adding shells would improve the above-mentioned helmets in a similar way to Von Holst, Nichols, or the state of the art.

A POSITA would further have had a reasonable expectation of successfully incorporating such components into one of the above-mentioned helmets. Incorporating additional or alternate materials into a layer or changing the shape of a layer was a design choice and selecting the appropriate materials to make an inner, middle, and outer shell in a helmet was a predictable matter of routine implementation for a POSITA.

v) Incorporating a shear mechanism into the helmets disclosed in US 2013/0019384 ("Knight") would have been obvious.

As discussed in Section III.D. above, all Asserted Claims of the '635 Patent are entitled to a priority date of no earlier than July 24, 2015. Thus, U.S. Patent Application Publication No. 2013/0019384 ("Knight") is prior art to the '635 Patent. As discussed above, Knight does not disclose or describe a "shear mechanism." It would, however, have been obvious to modify Knight to incorporate a shear mechanism such as those disclosed in at least Weber, Weber, Kleiven, Ferrara 2006, Ferrara 2007, Puchalski, Dotsuko, Madey, Hawkins, Von Holst, Halldin-I, Halldin-II, Halldin-I. As discussed in Section V.B. above, numerous helmets had been disclosed that utilized shear mechanisms. For example, Weber discloses isolation dampers that can "flex, bend, and/or compress to absorb the energy of impacts to the helmet from all directions, and thereby enable the inner and intermediate liners 122 and 126 to move relative to each other and/or the outer liner 128" as well as a space that "can comprise an air gap, or can be completely or partially filled with any suitable material in any form, including without limitation, a liquid, gel, foam, or gas cushion." Weber at [0046], [0049]. Similarly, Madey discloses an "interface layer" with "a distensible flexible envelope filled to a desired thickness with a viscous medium such as a gel" with the envelope secured to an inner and outer layer, "allow[ing] a rotational displacement R of the outer helmet layers with respect to the inner helmet layers." Madey at [0028], [0030]. Madey also discloses an interface layer with "a lamellar structure of hyper-elastic columns" that "bend and stretch in response to [a] tangential forces, thereby deflecting and partially absorbing the tangential force." Madey at [0037]. Ferrara 2007 describes a layer of cells that allow the "outer

shell 204 [to] not only deform in response to radial components of an impact, which components will be effectively absorbed by the cells 10 or 50 and inner layer 206, but also will shear relative to the inner layer 106 in response to tangential components of an impact, absorbing those components as well." Ferrara 2007 at [0086].

A POSITA would have been motivated and found it obvious to incorporate a shear mechanism such as those described above into Knight. Knight describes an "energy and impact transformer" and "energy and impact transformer layer," *e.g.*, Knight at [0038], [0055], but it does not describe how those may have associated with or included in a "shear mechanism." Weber, Kleiven, Ferrara 2006, Ferrara 2007, Dotsuko, Madey, Hawkins, Von Holst, Halldin-I, and Halldin-II provide those details as discussed above and in their associated charts, and a POSITA would have been motivated to modify Knight to incorporate those shear mechanisms. A POSITA would have found it obvious to combine these elements as a matter of routine implementation, as their combination is a straightforward and predictable combination of known elements according to known methods to yield predictable results, and Knight's helmet with sliding layers is ready for improvement through incorporation of a shear mechanism. The known technique of using the components and structures from the helmets discussed above to create a shear mechanism would improve Knight's helmet in a similar way to these other helmets.

A POSITA would have had a reasonable expectation of successfully incorporating such shear mechanisms into Knight's helmet because doing so was a predictable matter of routine design and implementation, including, for example, by placing the materials and structures described in the helmets discussed between Knight's inner and outer helmet layers.

6. <u>The '909 patent</u>

Each of the asserted claims of the '909 patent is invalid under 35 U.S.C. § 103 because it would have been obvious to one of ordinary skill in the art at the time of the invention in light of one or more prior art references and the understanding of one of ordinary skill in the art. In accordance with the agreed schedule, prior art references rendering the asserted claims of the '286

patent obvious are discussed below and included in claim chart Exhibits E as discussed in the chart above. Further reasons to combine the references identified include the nature of the problem being solved, the express, implied and inherent teachings of the prior art, the knowledge of persons of ordinary skill in the art, that such combinations would have yielded predictable results, and such combinations would have represented known alternatives to a person of ordinary skill in the art.

a) Obviousness Combinations

The accompanying charts identify how each prior art reference discloses the limitations of the asserted claims on a limitation-by-limitation basis at least under Plaintiff's apparent infringement theories and/or claim interpretations, and select combinations are identified below. If Plaintiff argues that any particular prior art reference lacks any feature for which no combining references are provided in the relevant chart, a person of ordinary skill in the art as of any priority date for the '909 patent would at a minimum have been motivated to modify the reference to include the allegedly missing feature, or to combine it with other references that include that feature, as discussed below. The obviousness combinations are listed below (and it should be understood that each listed combination can also include the knowledge of a person of ordinary skill in the art):

'909 Patent Claims are Obvious under 35 U.S.C. § 103 **Claim, Basis, References**
• Claims 1-2, 8-9, 11-13, and 19-20 are obvious over Weber in view of Puchalski • Claims 1-2, 5, 8-9, 11-13, 16, and 19-20 are obvious over Weber in view of Dotsuko • Claims 1-2, 8-9, 11-13, and 19-20 are obvious over Weber in view of Madey • Claims 1-2, 8-9, 11 are obvious over Weber in view of any one of Puchalski, and Madey, further in view of Nichols or Von Holst. • Claims 1-2, 5, 8-9, 11 are obvious over Weber in view of Dotsuko, further in view of Nichols or Von Holst. • Claims 1-2, 8-9, 11-13, and 19-20 are obvious over Von Holst in view of Puchalski • Claims 1-2, 5, 8-9, 11-13, 16, and 19-20 are obvious over Von Holst in view of Dotsuko • Claims 1-2, 8-9, 11-13, and 19-20 are obvious over Von Holst in view of Madey • Claims 1-2, 8-9, 11-13, and 19-20 are obvious over Von Holst in view of any one of Puchalski, Dotsuko, and Madey, and further in view of any one of Piper, Ferrara 2006, Puchalski, Copeland, or Madey

’909 Patent Claims are Obvious under 35 U.S.C. § 103 Claim, Basis, References
• Claims 1-2, 8-9, 11-13, and 19-20 are obvious over Von Holst in view of any one of Puchalski, Dotsuko, and Madey, and further in view of any one of Halldin-II, Ferrara 2006, Dotsuko, Ferrara 2007, Kleiven, Halldin-III, Weber, Madey, and Hawkins. • Claims 1-2, 8-9, 11-13, and 19-20 are obvious over Von Holst in view of any one of Puchalski, Dotsuko, and Madey, and further in view of any one of Halldin-II, Ferrara 2006, Dotsuko, Ferrara 2007, Kleiven, Halldin-III, Weber, Madey, and Hawkins, and further in view of any one of Piper, Ferrara 2006, Puchalski, Copeland, or Madey. • Claims 5 and 16 are obvious over Von Holst in view of Dotsuko, and further in view of any one of Halldin-II, Ferrara 2006, Dotsuko, Ferrara 2007, Kleiven, Halldin-III, Weber, Madey, and Hawkins. • Claims 5 and 16 are obvious over Von Holst in view of Dotsuko, and further in view of any one of Halldin-II, Ferrara 2006, Dotsuko, Ferrara 2007, Kleiven, Halldin-III, Weber, Madey, and Hawkins, and further in view of any one of Piper, Ferrara 2006, Puchalski, Copeland, or Madey. • Claims 5 and 16 are obvious over Von Holst in view of Puchalski or Madey, and further in view of Halldin-II or Halldin-III. • Claims 5 and 16 are obvious over Von Holst in view of Puchalski or Madey, and further in view of Halldin-II or Halldin-III, and further in view of any one of Piper, Ferrara 2006, Puchalski, Copeland, or Madey. • Claim 5 is obvious over Von Holst in view of Dotsuko, and further in view of any one of Halldin-II, Ferrara 2006, Dotsuko, Ferrara 2007, Kleiven, Halldin-III, Weber, Madey, and Hawkins, further in view of Nichols. • Claim 5 is obvious over Von Holst in view of Dotsuko, and further in view of any one of Halldin-II, Ferrara 2006, Dotsuko, Ferrara 2007, Kleiven, Halldin-III, Weber, Madey, and Hawkins, further in view of Nichols, and further in view of any one of Piper, Ferrara 2006, Puchalski, Copeland, or Madey. • Claim 5 is obvious over Von Holst in view of Puchalski or Madey, and further in view of Halldin-II or Halldin-III, further in view of Nichols. • Claim 5 is obvious over Von Holst in view of Puchalski or Madey, and further in view of Halldin-II or Halldin-III, further in view of Nichols, and further in view of any one of Piper, Ferrara 2006, Puchalski, Copeland, or Madey. • Claims 1-2, 8-9, 11 are obvious over Von Holst in view of any one of Puchalski, Dotsuko, and Madey, and further in view of any one of Halldin-II, Ferrara 2006, Dotsuko, Ferrara 2007, Kleiven, Halldin-III, Weber, Madey, and Hawkins and further in view of Nichols. • Claims 1-2, 8-9, 11 are obvious over Von Holst in view of any one of Puchalski, Dotsuko, and Madey, and further in view of any one of Halldin-II, Ferrara 2006, Dotsuko, Ferrara 2007, Kleiven, Halldin-III, Weber, Madey, and Hawkins, and further in view of Nichols, and further in view of any one of Piper, Ferrara 2006, Puchalski, Copeland, or Madey. • Claims 1-2, 8-9, 11 are obvious over Von Holst in view of any one of Puchalski, Dotsuko, and Madey, and further in view of Nichols.

’909 Patent Claims are Obvious under 35 U.S.C. § 103 Claim, Basis, References
• Claims 1-2, 8-9, 11 are obvious over Von Holst in view of any one of Puchalski, Dotsuko, and Madey, and further in view of Nichols, and further in view of Nichols, and further in view of any one of Piper, Ferrara 2006, Puchalski, Copeland, or Madey. • Claims 1-2, 8-9, 11-13, and 19-20 are obvious over Halldin-I in view of Puchalski • Claims 1-2, 5, 8-9, 11-13, 16, and 19-20 are obvious over Halldin-I in view of Dotsuko • Claims 1-2, 8-9, 11-13, and 19-20 are obvious over Halldin-I in view of Madey • Claims 1-2, 8-9, 11-13, and 19-20 are obvious over Halldin-I in view of any one of Puchalski, Dotsuko, and Madey, and further in view of any one of Piper, Ferrara 2006, Puchalski, Copeland, or Madey • Claims 1-2, 8-9, 11-13, and 19-20 are obvious over Halldin-I in view of Puchalski and further in view of any one of Halldin-II, Ferrara 2006, Dotsuko, Ferrara 2007, Kleiven, Halldin-III, Weber, Madey, and Hawkins. • Claims 1-2, 8-9, 11-13, and 19-20 are obvious over Halldin-I in view of Puchalski and further in view of any one of Halldin-II, Ferrara 2006, Dotsuko, Ferrara 2007, Kleiven, Halldin-III, Weber, Madey, and Hawkins, and further in view of any one of Piper, Ferrara 2006, Puchalski, Copeland, or Madey. • Claims 1-2, 5, 8-9, 11-13, 16, and 19-20 are obvious over Halldin-I in view of Dotsuko and in view of any one of Halldin-II, Ferrara 2006, Dotsuko, Ferrara 2007, Kleiven, Halldin-III, Weber, Madey, and Hawkins. • Claims 1-2, 5, 8-9, 11-13, 16, and 19-20 are obvious over Halldin-I in view of Dotsuko and in view of any one of Halldin-II, Ferrara 2006, Dotsuko, Ferrara 2007, Kleiven, Halldin-III, Weber, Madey, and Hawkins, and further in view of any one of Piper, Ferrara 2006, Puchalski, Copeland, or Madey. • Claims 1-2, 8-9, 11-13, and 19-20 are obvious over Halldin-I in view of Madey and in view of any one of Halldin-II, Ferrara 2006, Dotsuko, Ferrara 2007, Kleiven, Halldin-III, Weber, Madey, and Hawkins. • Claims 1-2, 8-9, 11-13, and 19-20 are obvious over Halldin-I in view of Madey and in view of any one of Halldin-II, Ferrara 2006, Dotsuko, Ferrara 2007, Kleiven, Halldin-III, Weber, Madey, and Hawkins, and further in view of any one of Piper, Ferrara 2006, Puchalski, Copeland, or Madey. • Claims 1-2, 5, 8-9, 11 are obvious over Halldin-I in view of any one of Puchalski, Dotsuko, and Madey, and in view of any one of Halldin-II, Ferrara 2006, Dotsuko, Ferrara 2007, Kleiven, Halldin-III, Weber, Madey, and Hawkins, and further in view of Nichols or Von Holst. • Claims 1-2, 5, 8-9, 11 are obvious over Halldin-I in view of any one of Puchalski, Dotsuko, and Madey, and in view of any one of Halldin-II, Ferrara 2006, Dotsuko, Ferrara 2007, Kleiven, Halldin-III, Weber, Madey, and Hawkins, and further in view of Nichols or Von Holst, and further in view of any one of Piper, Ferrara 2006, Puchalski, Copeland, or Madey. • Claims 5 and 16 are obvious over Halldin-I in view of Puchalski or Madey, and further in view of any one of Halldin-II, Halldin-III, and Dotsuko.

’909 Patent Claims are Obvious under 35 U.S.C. § 103 Claim, Basis, References
• Claims 5 and 16 are obvious over Halldin-I in view of Puchalski or Madey, and further in view of any one of Halldin-II, Halldin-III, and Dotsuko, and further in view of Nichols or Von Holst, and further in view of any one of Piper, Ferrara 2006, Puchalski, Copeland, or Madey. • Claim 5 is are obvious over Halldin-I in view of Puchalski or Madey, and further in view of any one of Halldin-II, Halldin-III, and Dotsuko, and further in view of Nichols or Von Holst. • Claim 5 is are obvious over Halldin-I in view of Puchalski or Madey, and further in view of any one of Halldin-II, Halldin-III, and Dotsuko, and further in view of Nichols or Von Holst, and further in view of Nichols or Von Holst, and further in view of any one of Piper, Ferrara 2006, Puchalski, Copeland, or Madey. • Claims 1-2, 8-9, 11 are obvious over Halldin-I in view of any one of Puchalski, and Madey, and further in view of Nichols or Von Holst. • Claims 1-2, 8-9, 11 are obvious over Halldin-I in view of any one of Puchalski, and Madey, and further in view of Nichols or Von Holst, and further in view of any one of Piper, Ferrara 2006, Puchalski, Copeland, or Madey. • Claim 5 is obvious over Halldin-I in view of Dotsuko and further in view of Nichols or Von Holst. • Claim 5 is obvious over Halldin-I in view of Dotsuko and further in view of Nichols or Von Holst, and further in view of any one of Piper, Ferrara 2006, Puchalski, Copeland, or Madey. • Claims 1-2, 8-9, 11-13, and 19-20 are obvious over Von Holst or Halldin-I in view of any one of Puchalski, Dotsuko, and Madey, and further in view of any one of Piper, Puchalski, Ferrara 2006, Ferrara 2007, Copeland, and Madey. • Claims 1-2, 8-9, 11-13, and 19-20 are obvious over Von Holst or Halldin-I in view of any one of Puchalski, Dotsuko, and Madey, and further in view of any one of Piper, Puchalski, Ferrara 2006, Ferrara 2007, Copeland, and Madey, and further in view of any one of Piper, Ferrara 2006, Puchalski, Copeland, or Madey. • Claims 5, 8, 16, and 19 are obvious over Von Holst or Halldin-I in view of Dotsuko, and further in view of any one of Piper, Puchalski, Ferrara 2006, Ferrara 2007, Copeland, and Madey. • Claims 5, 8, 16, and 19 are obvious over Von Holst or Halldin-I in view of Dotsuko, and further in view of any one of Piper, Puchalski, Ferrara 2006, Ferrara 2007, Copeland, and Madey, and further in view of any one of Piper, Ferrara 2006, Puchalski, Copeland, or Madey. • Claims 1-2, 8-9, 11 are obvious over Von Holst or Halldin-I in view of any one of Puchalski, Dotsuko, and Madey, and further in view of any one of Piper, Puchalski, Ferrara 2006, Ferrara 2007, Copeland, and Madey, and further in view of Nichols or Von Holst. • Claims 1-2, 8-9, 11 are obvious over Von Holst or Halldin-I in view of any one of Puchalski, Dotsuko, and Madey, and further in view of any one of Piper, Puchalski, Ferrara 2006, Ferrara 2007, Copeland, and Madey, and further in view of Nichols or Von Holst, and further in view of any one of Piper, Ferrara 2006, Puchalski, Copeland, or Madey.

’909 Patent Claims are Obvious under 35 U.S.C. § 103 Claim, Basis, References
• Claims 5 and 8 are obvious over Von Holst or Halldin-I in view of Dotsuko, and further in view of any one of Piper, Puchalski, Ferrara 2006, Ferrara 2007, Copeland, and Madey, and further in view of Nichols or Von Holst. • Claims 5 and 8 are obvious over Von Holst or Halldin-I in view of Dotsuko, and further in view of any one of Piper, Puchalski, Ferrara 2006, Ferrara 2007, Copeland, and Madey, and further in view of Nichols or Von Holst, and further in view of any one of Piper, Ferrara 2006, Puchalski, Copeland, or Madey. • Claims 1-2, 5, 8-9, 11-13, 16, and 19-20 are obvious over Kleiven in view of Puchalski • Claims 1-2, 5, 8-9, 11-13, 16, and 19-20 are obvious over Kleiven in view of Madey • Claims 1-2, 5, 8-9, 11 are obvious over Kleiven in view of Puchalski or Madey, and further in view of Nichols or Von Holst. • Claims 1-2, 5, 8-9, 11-13, 16, and 19-20 are obvious over Kleiven in view of Puchalski and further in view of any one of Piper, Ferrara 2006, Copeland, Madey, and Ferrara 2007. • Claims 1-2, 5, 8-9, 11-13, 16, and 19-20 are obvious over Kleiven in view of Madey further in view of any one of Piper, Ferrara 2006, Copeland, Puchalski, and Ferrara 2007. • Claims 1-2, 5, 8-9, 11-13, 16, and 19-20 are obvious over Kleiven in view of Dotsuko and further in view of any one of Piper, Puchalski, Ferrara 2006, Copeland, Madey, and Ferrara 2007. • Claims 1-2, 5, 8-9, 11 are obvious over Kleiven in view of Dotsuko and further in view of any one of Piper, Puchalski, Ferrara 2006, Copeland, Madey, and Ferrara 2007, and further in view of Nichols or Von Holst. • Claims 1-2, 5, 8-9, 11 are obvious over Kleiven in view of Puchalski and further in view of any one of Piper, Ferrara 2006, Copeland, Madey, and Ferrara 2007, and further in view of Nichols or Von Holst. • Claims 1-2, 5, 8-9, 11 are obvious over Kleiven in view of Madey further in view of any one of Piper, Ferrara 2006, Copeland, Puchalski, and Ferrara 2007, and further in view of Nichols or Von Holst. • Claims 1-2, 8-9, 11-13, and 19-20 are obvious over Hawkins in view of Puchalski • Claims 1-2, 8-9, 11-13, and 19-20 are obvious over Hawkins in view of Madey • Claims 1-2, 8-9, 11 are obvious over Hawkins in view of Puchalski or Madey, and further in view of Nichols or Von Holst. • Claims 1-2, 8-9, 11-13, and 19-20 are obvious over Hawkins in view of Puchalski and further in view of any one of Piper, Puchalski, Ferrara 2006, Copeland, Madey and Ferrara 2007. • Claims 1-2, 8-9, 11-13, and 19-20 are obvious over Hawkins in view of Madey and further in view of any one of Piper, Puchalski, Ferrara 2006, Copeland, and Ferrara 2007. • Claims 1-2, 5, 8-9, 11-13, 16, and 19-20 are obvious over Hawkins in view of Dotsuko and further in view of any one of Piper, Puchalski, Ferrara 2006, Copeland, Madey and Ferrara 2007. • Claims 1-2, 8-9, 11 are obvious over Hawkins in view of Puchalski and further in view of any one of Piper, Puchalski, Ferrara 2006, Copeland, Madey and Ferrara 2007, and further in view of Nichols or Von Holst.

’909 Patent Claims are Obvious under 35 U.S.C. § 103 Claim, Basis, References
• Claims 1-2, 8-9, 11 are obvious over Hawkins in view of Madey and further in view of any one of Piper, Puchalski, Ferrara 2006, Copeland, Madey and Ferrara 2007, and further in view of Von Holst or Nichols. • Claims 1-2, 5, 8-9, 11 are obvious over Hawkins in view of Dotsuko and further in view of any one of Piper, Puchalski, Ferrara 2006, Copeland, Madey and Ferrara 2007, and further in view of Nichols or Von Holst. • Claims 1-2, 8-9, 12-13, and 19-20 are obvious over Ferrara 2006 in view of Puchalski • Claims 1-2, 5, 8-9, 12-13, 16, and 19-20 are obvious over Ferrara 2006 in view of Dotsuko • Claims 1-2, 8-9, 12-13, and 19-20 are obvious over Ferrara 2006 in view of Madey • Claims 1-2, 8-9 are obvious over Ferrara 2006 in view of Puchalski or Madey, and further in view of Nichols or Von Holst. • Claims 1-2, 5, 8-9 are obvious over Ferrara 2006 in view of Dotsuko and further in view of Nichols or Von Holst. • Claims 1, 2, 8, 9, 11, 12, 13, 19, 20 are obvious over Ferrara 2007 in view of Puchalski • Claims 1, 2, 5, 8, 9, 12, 13, 16, 19, 20 are obvious over Ferrara 2007 in view of Dotsuko • Claims 1, 2, 8, 9, 11, 12, 13, 19, 20 are obvious over Ferrara 2007 in view of Madey • Claims 1, 2, 8, 9, 11, are obvious over Ferrara 2007 in view of Puchalski or Madey, and further in view of Nichols or Von Holst • Claims 1, 2, 5, 8, 9 are obvious over Ferrara 2007 in view of Dotsuko and further in view of Nichols or Von Holst. • Claims 1, 2, 8, 9, 11, 12, 13, 19, 20 are obvious over Ferrara 2007 in view of Puchalski or Madey and further in view of Piper, Puchalski, Ferrara 2006, Copeland, and Madey. • Claims 1, 2, 8, 9, 11 are obvious over Ferrara 2007 in view of Puchalski or Madey and further in view of Piper, Puchalski, Ferrara 2006, Copeland, and Madey, and further in view of Nichols or Von Holst. • Claims 1, 2, 5, 8, 9, 11, 12, 13, 16, 19, 20 are obvious over Ferrara 2007 in view of Dotsuko and further in view of Piper, Puchalski, Ferrara 2006, Copeland, and Madey. • Claims 1, 2, 5, 8, 9, 11 are obvious over Ferrara 2007 in view of Dotsuko and further in view of Piper, Puchalski, Ferrara 2006, Copeland, and Madey, and further in view of Nichols or Von Holst. • Claims 1, 2, 5, 8-9, 12-13, 16, 19 and 20 are obvious over Dotsuko in view of Piper • Claims 1, 2, 5, 8-9, 12-13, 16, 19 and 20 are obvious over Dotsuko in view of Ferrara 2006 • Claims 1, 2, 5, 8-9, 12-13, 16, 19 and 20 are obvious over Dotsuko in view of Puchalski • Claims 1, 2, 5, 8-9, 12-13, 16, 19 and 20 are obvious over Dotsuko in view of Copeland • Claims 1, 2, 5, 8-9, 12-13, 16, 19 and 20 are obvious over Dotsuko in view of Madey • Claims 1, 2, 5, 8-9, 12-13, 16, 19 and 20 are obvious over Dotsuko in view of Ferrara 2007. • Claims 1, 2, 5, 8-9 are obvious over Dotsuko in view of any one of Piper, Ferrara 2006, Puchalski, Copeland, Madey and Ferrara 2007, and futher in view of Nichols or Von Holst. • Claims 1-2, 5, 8-9, 12-13, 16, and 19-20 are obvious over Halldin-II in view of Puchalski • Claims 1-2, 5, 8-9, 12-13, 16, and 19-20 are obvious over Halldin-II in view of Madey

’909 Patent Claims are Obvious under 35 U.S.C. § 103 Claim, Basis, References
• Claims 1-2, 5, 8-9 are obvious over Halldin-II in view of Puchalski or Madey and further in view of Nichols or Von Holst. • Claims 1-2, 5, 8-9, 12-13, 16, and 19-20 are obvious over Halldin-II in view of any one of Puchalski, Dotsuko, and Madey, and further in view of Piper, Puchalski, Ferrara 2006, Ferrara 2007, Copeland, and Madey. • Claims 1-2, 5, 8-9 are obvious over Halldin-II in view of any one of Puchalski, Dotsuko, and Madey, and further in view of Piper, Puchalski, Ferrara 2006, Ferrara 2007, Copeland, and Madey, and further in view of Nichols or Von Holst. • Claims 1-2, 5, 8-9, 12-13, 16, and 19-20 are obvious over Halldin-III in view of Puchalski • Claims 1-2, 5, 8-9, 12-13, 16, and 19-20 are obvious over Halldin-III in view of Madey • Claims 1-2, 5, 8-9 are obvious over Halldin-III in view of Puchalski or Madey and further in view of Nichols or Von Holst. • Claims 1-2, 5, 8-9, 12-13, 16, and 19-20 are obvious over Halldin-III in view of any one of Puchalski, Dotsuko, and Madey, and further in view of Piper, Puchalski, Ferrara 2006, Ferrara 2007, Copeland, and Madey. • Claims 1-2, 5, 8-9 are obvious over Halldin-III in view of any one of Puchalski, Dotsuko, and Madey, and further in view of Piper, Puchalski, Ferrara 2006, Ferrara 2007, Copeland, and Madey, and further in view of Nichols or Von Holst. • Claims 5, 8, 16 and 19 are obvious over any one of Weber, Von Holst, Halldin-I, Ferrara 2006, Ferrara 2007, Halldin-II, and Halldin-III, in view of any one of Puchalski, Dotsuko, and Madey, and further in view of Erb. • Claims 5, 8, 16 and 19 are obvious over Dotsuko, in view of any one of Puchalski, Piper, Ferrara 2006, Ferrara 2007, Copeland, and Madey, and further in view of Erb. • Claims 5, 8, 16 and 19 are obvious over Hawkins or Kleiven in view of Dotsuko, in view of Puchalski, Piper, Ferrara 2006, Ferrara 2007, Copeland, and Madey, and further in view of Erb. • Claims 5, 8, 16 and 19 are obvious over Hawkins or Kleiven in view of Puchalski or Madey, and further in view of Erb. • Claims 5 and 8 are obvious over any one of Weber, Von Holst, Halldin-I, Ferrara 2006, Ferrara 2007, Halldin-II, and Halldin-III, in view of any one of Puchalski, Dotsuko, and Madey, and further in view of Erb, and further in view of Nichols or Von Holst. • Claims 5 and 8 are obvious over Dotsuko, in view of any one of Puchalski, Piper, Ferrara 2006, Ferrara 2007, Copeland, and Madey, and further in view of Erb, and further in view of Nichols or Von Holst. • Claims 5 and 8 are obvious over Hawkins or Kleiven in view of Dotsuko, in view of Puchalski, Piper, Ferrara 2006, Ferrara 2007, Copeland, and Madey, and further in view of Erb, and further in view of Nichols or Von Holst. • Claims 5 and 8 are obvious over Hawkins or Kleiven in view of Puchalski or Madey, and further in view of Erb, and further in view of Nichols or Von Holst. • Claims 5, 8, 16 and 19 are obvious over any one of Von Holst and Halldin-I, in view of any one of Puchalski, Dotsuko, and Madey, in view of any one of Halldin-II, Ferrara 2006,

’909 Patent Claims are Obvious under 35 U.S.C. § 103 Claim, Basis, References
Dosuko, Ferrara 2007, Kleiven, Halldin-III, Weber, Madey and Hawkins, and further in view of Erb. • Claims 5 and 8 are obvious over any one of Von Holst and Halldin-I, in view of any one of Puchalski, Dotsuko, and Madey, in view of any one of Halldin-II, Ferrara 2006, Dosuko, Ferrara 2007, Kleiven, Halldin-III, Weber, Madey and Hawkins, and further in view of Erb and further in view of Nichols or Von Holst. • Claims 5, 8, 16 and 19 are obvious over Puchalski or Madey, in view of Erb. • Claims 5 and 8 are obvious over Puchalski or Madey, in view of Erb, and further in view of Nichols or Von Holst. • Claims 5, 8, 16 and 19 are obvious over Puchalski, in view of Piper, Ferrara 2006, Ferrara 2007, Copeland and Madey, and further in view of Erb. • Claims 5, 8, 16 and 19 are obvious over Madey, in view of Piper, Ferrara 2006, Puchalski, Ferrara 2007, and Copeland, and further in view of Erb. • Claims 5 and 8 are obvious over Puchalski, in view of Piper, Ferrara 2006, Ferrara 2007, Copeland and Madey, and further in view of Erb, and further in view of Nichols or Von Holst. • Claims 5 and 8 are obvious over Madey, in view of Piper, Ferrara 2006, Puchalski, Ferrara 2007, and Copeland, and further in view of Erb, and further in view of Nichols or Von Holst. • Claims 1, 2, 5, 8, 9, 12, 13, 16, 19, 20 are obvious over Puchalski or Madey, in view Nichols or Von Holst. • Claims 1, 2, 5, 8, 9, 12, 13, 16, 19, 20 are obvious over Puchalski, in view of Piper, Ferrara 2006, Ferrara 2007, Copeland and Madey. • Claims 1, 2, 5, 8, 9, 12, 13, 16, 19, 20 are obvious over Madey, in view of Piper, Ferrara 2006, Puchalski, Ferrara 2007, and Copeland. • Claims 1, 2, 5, 8, 9 are obvious over Puchalski, in view of Piper, Ferrara 2006, Ferrara 2007, Copeland and Madey, and further in view of Nichols or Von Holst. • Claims 1, 2, 5, 8, 9 are obvious over Madey, in view of Piper, Ferrara 2006, Puchalski, Ferrara 2007, and Copeland, and further in view of Nichols or Von Holst. • Claims 1-2, 8-9, 11-13, and 19-20 are obvious over Knight in view of Madey • Claims 5, 8, 16 and 19 are obvious over Knight in view of Madey and further in view of any one of Erb, Kleiven, Dotsuko, Halldin-II and Halldin-III. • Claims 1-2, 5, 8-9, 11-13, 16, and 19-20 are obvious over Knight in view of Dotsuko. • Claims 1-2, 5, 8-9, 11-13, 16, and 19-20 are obvious over Knight in view of Dotsuko, and further in view of any one of Erb, Kleiven, Halldin-II, and Halldin-III. • Claims 1-2, 8-9, 11-13, and 19-20 are obvious over Knight in view of Ferrara 2006. • Claims 5, 8, 16 and 19 are obvious over Knight in view of Ferrara 2006 and further in view of any one of Erb, Kleiven, Dotsuko, Halldin-II and Halldin-III. • Claims 1-2, 5, 8-9, 11-13, 16, and 19-20 are obvious over Knight in view of Kleiven. • Claims 1-2, 5, 8-9, 11-13, 16, and 19-20 are obvious over Knight in view of Kleiven and further in view of any one of Erb, Dotsuko, Halldin-II and Halldin-III. • Claims 1-2, 8-9, 11-13, and 19-20 are obvious over Knight in view of Ferrara 2007.

’909 Patent Claims are Obvious under 35 U.S.C. § 103 Claim, Basis, References
• Claims 5, 8, 16 and 19 are obvious over Knight in view of Ferrara 2007 and further in view of any one of Erb, Kleiven, Dotsuko, Halldin-II, and Halldin-III. • Claims 1-2, 8-9, 11-13, and 19-20 are obvious over Knight in view of Hawkins. • Claims 5, 8, 16 and 19 are obvious over Knight in view of Hawkins and further in view of any one of Erb, Kleiven, Dotsuko, Halldin-II, and Halldin-III. • Claims 1-2, 8-9, 11-13, and 19-20 are obvious over Knight in view of Von Holst. • Claims 5, 8, 16 and 19 are obvious over Knight in view of Von Holst and further in view of any one of Erb, Kleiven, Dotsuko, Halldin-II, and Halldin-III. • Claims 1-2, 8-9, 11-13, and 19-20 are obvious over Knight in view of Halldin-I. • Claims 5, 8, 16 and 19 are obvious over Knight in view of Halldin-I and further in view of any one of Erb, Kleiven, Dotsuko, Halldin-II, and Halldin-III. • Claims 1-2, 5, 8-9, 11-13, 16, and 19-20 are obvious over Knight in view of Halldin-II. • Claims 5, 8, 16 and 19 are obvious over Knight in view of Halldin-II and further in view of any one of Erb, Kleiven, Dotsuko, Halldin-II, and Halldin-III. • Claims 1-2, 5, 8-9, 11-13, 16, and 19-20 are obvious over Knight in view of Halldin-III. • Claims 5, 8, 16 and 19 are obvious over Knight in view of Halldin-III and further in view of any one of Erb, Kleiven, Dotsuko, Halldin-II, and Halldin-III. • Claims 1-2, 8-9, 11-13, and 19-20 are obvious over Knight in view of Weber. • Claims 5, 8, 16 and 19 are obvious over Knight in view of Weber and further in view of any one of Erb, Kleiven, Dotsuko, Halldin-II, and Halldin-III. • Claims 1-2, 8-9, 11-13, and 19-20 are obvious over Knight in view of Puchalski. • Claims 5, 8, 16 and 19 are obvious over Knight in view of Puchalski and further in view of any one of Erb, Kleiven, Dotsuko, Halldin-II, and Halldin-III. • Claims 1,2,5, 8-9, 11, 12-13, 16, 19, and 20 are obvious over any one of Weber, Ferrara 2006, Von Holst, Halldin-I, Halldin-II, Kleiven, Ferrara 2007, Madey, and Datsuko, and further in view of Back on Track EQ2. • Claims 1,2, 8-9, 11, 12-13, 19, and 20 are obvious over Weber in view of any one of the Lazer P-Nut MIPS, POC Trabec Race, Lazer Superskin, TSG Kraken, and Burton RED Hi-Fi Helmets • Claims 1,2, 8-9, 12-13, 19, and 20 are obvious over Ferrara in view of any one of the Lazer P-Nut MIPS, POC Trabec Race, Lazer Superskin, TSG Kraken, and Burton RED Hi-Fi Helmets • Claims 1,2, 8-9, 11, 12-13, 19, and 20 are obvious over Von Holst in view of any one of the Lazer P-Nut MIPS, POC Trabec Race, Lazer Superskin, TSG Kraken, and Burton RED Hi-Fi Helmets • Claims 1,2, 8-9, 11, 12-13, 19, and 20 are obvious over Halldin-I in view of any one of the Lazer P-Nut MIPS, POC Trabec Race, Lazer Superskin, TSG Kraken, and Burton RED Hi-Fi Helmets • Claims 1,2, 5, 8-9, 12-13, 16, 19, and 20 are obvious over Halldin-II in view of any one of the Lazer P-Nut MIPS, POC Trabec Race, Lazer Superskin, TSG Kraken, and Burton RED Hi-Fi Helmets

’909 Patent Claims are Obvious under 35 U.S.C. § 103 Claim, Basis, References
• Claims 1,2, 5 8-9, 11, 12-13, 16, 19, and 20 are obvious over Kleiven in view of any one of the Lazer P-Nut MIPS, POC Trabec RaceLazer Superskin, TSG Kraken, and Burton RED Hi-Fi Helmets • Claims 1,2, 8-9, 11, 12-13, 19, and 20 are obvious over Ferrara 2007 in view of any one of the Lazer P-Nut MIPS, POC Trabec Race, Lazer Superskin, TSG Kraken, and Burton RED Hi-Fi Helmets • Claims 1,2, 5, 8-9, 12-13, 16, 19, and 20 are obvious over Madey in view of any one of the Lazer P-Nut MIPS, POC Trabec Race, Lazer Superskin, TSG Kraken, and Burton RED Hi-Fi Helmets • Claims 1,2, 5, 8-9, 12-13, 16, 19, and 20 are obvious over Dotsuko in view of any one of the Lazer P-Nut MIPS, POC Trabec Race, Lazer Superskin, TSG Kraken, and Burton RED Hi-Fi Helmets • Claims 1-2, 8, 9, 12-13, 19, and 20 are obvious in view of Puchalski. • Claims 1-2, 8-9, 12-13, 19, and 20 are obvious in view of Madey • Claims 1-2, 5, 8-9, 12-13, 16, 19, and 20 are obvious in view of the Back on Track EQ2 Helmet • Claims 1-2, 9,12-13, 16, 19, and 20 are obvious in view of the POC Trabec Race Helmet • Claims 1-2, 9, 12-13, 16, 19 and 20 are obvious in view of the TSG Kraken Helmet • Claims 1-2, 9, 12-13, 16, 19 and 20 are obvious in view of the Lazer P-Nut MIPS Helmet • Claims 1-2, 9, 12-13, 16, 19 and 20 are obvious in view of the Burton RED HiFi Helmet

b) Reasons to Modify, Extend, or Combine Claimed Concepts

As set forth in Sections IV and V and in the claim charts Exhibits E listed in the above chart, the prior art references and products demonstrate that the concepts described in the ’909 patent were well known and in public use as of the earliest possible priority date of the ’909 patent. The ’909 patent does not introduce any new concepts for helmets allowing for relative sliding between layers, nor does it combine these known concepts in any inventive or non-obvious manner. The disclosure of the references and reasons for modifying and/or combining such references include those identified in the General Comments set out in Section IV above, the analysis below, and the evidence cited in claim chart Exhibits E as noted in the chart above, which are incorporated by reference into this section as well as the following:

i) A chin strap attached to an inner layer to secure an inner layer (inner protective shell/inner protective layer) of a helmet while an outer layer (outer protective shell/outer

protective layer) is allowed to slide would have been an obvious feature of helmets allowing relative sliding

To the extent Plaintiff contends that the prior art identified in the Exhibits as anticipating the claims does not disclose a chin strap connected to an inner layer, a POSITA would have found obvious to incorporate such a chin strap and would have understood the benefits of doing so. As discussed in Section V, chin straps were ubiquitous in helmet design, *see, e.g.*, Newman at 51 ("Usually, the chin strap assembly is a major element of the retention system."), as was placing chin straps on the inner layers of helmets, *see, e.g.*, Field (US5,353,437), 2:51-52, 5:48-51; Mills-2006 169; Copeland 1991 (US5,129,108), Fig. 3; Nomiyama (US4,012,794), 2:30-31, 2:14-16; Goldman (US7,770,239), 1:19-32.

Further, a POSITA would have been motivated to and found it obvious to attach a chin strap to an inner layer because such a combination was widely known, particularly in helmets utilizing sliding layers, as were its benefits. *See, e.g.*, Dotsuko at [0022] (disclosing, in a helmet designed to have layers slide relative to one another, that "since the chin strap 90 is attached to the liner 30, it becomes easier for the shell 20 to rotate relative to the liner 30 (that is, the inner liner 50), which is fixed to the head He by the chin strap 90. When impact energy Ea acts on the shell 20, the liner 30 (i.e., the inner liner 50) remains in place while the shell 20 alone relatively rotates in the direction of the force, thereby absorbing the impact energy Ea."); Puchalski at 12:1-3 ("Although not essential, most preferably, the helmet chin straps 16 are secured to the peripheral edge of the inner panel 126, along each of its sides."); Field at 5:46-51 ("Inner helmet 40 is covered by a plastic surface or microshield 41 to facilitate movement of the head in the helmet. This lining surrounds inner pads 42, and incorporates chin strap 43, which functions to hold the inner helmet 40 in place relative to the wearer's head."); Nomiyama at 2:14-16 (in a helmet with sliding shells, stating that "a variety of well known paddings or safety straps can be installed within the inner shell to provide the wearer not only protection, but also comfort heretofore unobtainable in a safety helmet"). A POSITA seeking to develop or modify a helmet that already included layers that can

slide relative to one another would thus have been motivated to, and would have found it obvious to incorporate a chin strap on the inner layer of a helmet.

Further, a POSITA would have been motivated to utilize a chin strap attached to an inner layer as a known configuration to keep the helmet on the head of the wearer without transferring the rotational force of impact to the head. This would have yielded predictable results, namely, sliding of the inner layer of the helmet relative to other layers to reduce rotational force to the head rather than transferring it to the head, improving the structural integrity and safety of the helmet. Further, a POSITA would have found it obvious to try this combination of chin strap-to-layer connection because there were a finite number of combinations—namely, attaching a chin strap to an inner, an outer, or an intermediate layer—and a POSITA would have understood attaching the chin strap to the inner layer to have had the predictable effect of securing the inner layer of the helmet to the head while the outer layer is allowed to slide.

A POSITA would have had a reasonable expectation of successfully connecting a chin strap to the inner layer in a manner that maintained the ability of the inner layer to move relative to other layers of the helmet. Chin straps attached to inner layers were a common feature of helmets of the time, particularly in helmets incorporating sliding layers, and the chin straps had been taught as allowing the inner layer of a helmet to remain secure to the head while the outer layer is allowed to slide. Implementing such an attachment would have been a matter of routine for a POSITA, and an application of known design techniques to yield predictable results.

For example, a POSITA would have been motivated to combine the disclosure of a chin strap connected to an inner layer in Puchalski, Dotsuko, or Madey, or in the Lazer P-Nut MIPS, POC Trabec Race, Back on Track EQ2, Lazer Superskin, TSG Kraken, and Burton RED Hi-Fi Helmets, with any of the helmets allowing relative sliding disclosed by Weber, Ferrara 2006, Ferrara 2007, Hawkins, Von Holst, Halldin-I, Halldin-II, Halldin-III, or Kleiven. All references address the same problem as the challenged claims of reducing rotational acceleration on the brain during impacts with the head and similar solutions of providing multiple layers that can slide

relative to one another, as discussed above. *See, e.g.*, Weber, [0002] (disclosing "protective helmets that protect the human head against repetitive impacts so as to significantly reduce the likelihood of both translational and rotational brain injury and concussions"); Kleiven, [0002] (directed to "an improved material/structure that reduces angular/rotational motion or acceleration of the human brain and body caused by oblique impact. In the material/structure, there is an inner layer and an outer layer and a separation between the inner layer and the outer layer by spikes that are constructed so that they permit displacement of the outer layer relative to the inner layer, hereby reducing the force from an oblique impact."); Hawkins at [0006] (describing "[a] method of absorbing compression forces imparted to a surface by an impacting object in accordance with one exemplary implementation of a present invention includes converting at least some compression forces into shear forces while the object is in contact with the surface and imparting a rotational force to the object while the object is in contact with the surface"); Ferrara 2006 at [0005] (recognizing that currently marketed helmets "generally do not diminish the rotational forces experienced by the brain" and providing a solution of a middle layer that can "resiliently shear with respect to the inner layer in response to a tangential impact to the outer layer"); Puchalski at 12:55-58 (describing relative sliding between shell layers); Copeland at [0022-23] (describing foam members for shock absorption and additional comfort); Madey at [0024] ("[T]he present invention provides a means of diverting and/or absorbing tangential impact energy before that energy is translated to the wearer's head and neck."); Ferrara 2007 at [0086] (describing helmets with cells that "will shear relative to the inner layer 106 in response to tangential components of an impact, absorbing those components as well"); Dotsuko at [0006] ("The present invention addresses the problem of providing a technology that enables a helmet to be securely mounted on the head of an occupant and to efficiently absorb both impact energy in a direction perpendicular to the outer surface of the shell of the helmet and impact energy in a direction along the outer surface of the shell of the helmet.").

A POSITA would have found it obvious to combine these elements as a matter of routine implementation, as their combination is a straightforward and predictable combination of known elements according to known methods to yield predictable results, and the above chin straps are ready for improvement through incorporation into any of the above helmets. The known technique of using chin straps to secure the inner layer on the head while the helmet's outer layer moves would improve the above-mentioned helmets in similar ways as those disclosing such chin straps.

Puchalski, Dotsuko, Madey, and the Lazer P-Nut MIPS, POC Trabec Race, Back on Track EQ2, Lazer Superskin, TSG Kraken, and Burton RED Hi-Fi Helmets all teach or disclose utilizing a helmet with a chin strap on an inner liner, as discussed above and in their respective charts. Weber and Ferrara 2006 each describe and recognize the importance of utilizing chin straps for safe and optimal use of a helmet. Weber at [0038] ("Proper restraint on the wearer's head can be managed by, for example, a chin-strap and/or a neck security device of a type commonly used on conventional helmets."); Ferrara 2006 at [0034] ("[H]elmets of the invention can be constructed with various additional features, such as … retention straps, chin straps, and the like."). Von Holst, Halldin-I, Halldin-II, Hawkins, Ferrara 2007, and Kleiven do not explicitly discuss chin straps, but as discussed above, chin straps were ubiquitous in helmet design because of their benefits for operability and safety. Thus a POSITA reviewing these general helmet references as well as those describing chin straps generally would have immediately looked to teachings of chin straps to complement the disclosures of Weber, Ferrara 2006, Ferrara 2007, Von Holst, Halldin-I, Halldin-II, Halldin-III, Hawkins, or Kleiven.

As Puchalski, Dotsuko, and Madey recognize, the chin strap is most preferably placed on an inner layer that slides relative to an outer layer and that maintains its position relative to the wearer's head. Because the purpose of the chin strap is to secure the helmet for "[p]roper restraint on the wearer's head," Weber at [0038], placing it on the inner layer that conforms to the wearer's head would have been an obvious design choice to ensure that the helmet stays on when rotational impact causes the outer layer to slide. *See, e.g.*, Dotsuko, [0022]. A POSITA would have

understood and expected that the other (small finite set of) options, while available, may lead to less desirable arrangements. For example, attaching the chin strap to a different, movable layer would cause the chin strap to move with that layer, which risks harm to the user and/or may mean the strap no longer properly secures the helmet to the wearer's head. Placing a chin strap along the inner liners of a helmet in this preferable position thus would have further aided in ensuring proper, consistent fit with the wearer's head.

Further, a helmet's chin strap has a finite number of places in which it can be attached such that there are a limited number of solutions with predictable results. It must be attached to a structural feature, particularly one of the shell layers or liners, and there are only up to three possible layers: the inner, intermediate, or outer layer. A POSITA would have been motivated to try each of these limited options, and, in particular, would have been motivated to attach the chin strap in Puchalski's and Dotsuko's preferred inner layer position to ensure a consistent, proper fit and position of the strap.

A POSITA would have had a reasonable expectation of success in modifying Weber, Ferrara 2006, Von Holst, Halldin-I, Halldin-II, Halldin-III, Hawkins, or Kleiven with Puchalski's, Dotsuko's, Madey's or the Lazer P-Nut MIPS, POC Trabec Race, Back on Track EQ2, Lazer Superskin, TSG Kraken, and Burton RED Hi-Fi Helmets' chin strap and location. POSITAs were well equipped to modify chin strap locations for specific helmet designs. For example, a POSITA would have understood how to implement chin straps into specific helmet designs and ensure, e.g., that outer layer of a helmet is connected strongly enough to the helmet to ensure integrity of the system without chin strap attachments on the outer layer. For example, as discussed above, Weber and Ferrara 2006 disclose a chin strap attached to the helmet without further implementation location details, and a POSITA would have, as a matter of routine implementation, been able to configure the chin strap to attach on the inner protective shell of any of the helmets in Weber, Ferrara 2006, Ferrara 2007, Von Holst, Halldin-I, Halldin-II, Hawkins, or Kleiven. Further, POSITAs recognized chin straps attached to the inner layer that conformed to the head in helmets

as conventional across fields and particularly in helmets with layers that could slide relative to one another, as discussed above.

For another example, a POSITA would have been motivated to combine the disclosure in the Xenith X1 of a chin strap that is tightened to connect inner padding to the head through a cable with the disclosures in the Lazer P-Nut MIPS POC Trabec Race, Back on Track EQ2, Lazer Superskin, TSG Kraken, or Burton RED Hi-Fi Helmets, Puchalski, or Dotsuko of attaching the strap directly to the inner layer. The Xenith X1 is designed so that the chin strap is connected to a cable, and when the chin strap is cinched it tightens the cable to firmly fit the inner liner to the wearer's head. The Third Angle, *Xenith: Football Helmet Technology That Is Changing The Game For Athletes,* Third Angle Podcast (May 20, 2023), https://thirdanglepodcast.buzzsprout.com/1722287/episodes/12926164-xenith-football-helmet-technology-that-is-changing-the-game-for-athletes (RVST00001572-RVST00001578). The Xenith X1 is designed to address the problem of reducing rotational impact, with the solution being that "when an impact happens, the impact will happen with the shell, but the padding is connected to your head." *Id.* A POSITA would have recognized that connecting the chin strap directly to the inner layer would keep the layer firmly connected to the wearer's head to reduce that layer's movement on impact. The Lazer P-Nut MIPS, POC Trabec Race, Back on Track EQ2, Lazer Superskin, TSG Kraken, and Burton RED Hi-Fi Helmets each display a strap connected directly to the inner liner that has the ability to slide relative to the outer layer that would move on impact.

A POSITA would have had a reasonable expectation of success in attaching the chin strap directly to the inner layer, rather than through an internal cable system, because the POSITA would have known this is a simpler mechanical approach to maintaining the position of the inner layer on the head. To the extent Plaintiff contends that the prior art identified in the Exhibits as anticipating the claims does not disclose a chin strap connected to an inner layer, a POSITA would have found it obvious to incorporate such a chin strap and would have understood the benefits of doing so. As discussed in Section V, chin straps were ubiquitous in helmet design, *see, e.g.*,

Newman at 51 ("Usually, the chin strap assembly is a major element of the retention system."), as was placing chin straps on the inner layers of helmets, *see, e.g.*, Field (US5,353,437), 2:51-52, 5:48-51; Mills-2006 169; Copeland 1991 (US5,129,108), Fig. 3; Nomiyama (US4,012,794), 2:30-31, 2:14-16; Goldman (US7,770,239), 1:19-32.

ii) Incorporating mechanical connections into sliding layers would have been an obvious feature of helmets allowing relative sliding and reducing rotational acceleration of the brain

To the extent Plaintiff contends that the prior art identified as anticipating the claims does not disclose the connection of layers, such as via mechanical connections (e.g., trusses or elastomeric connectors), to allow relative displacement/sliding a POSITA would have found obvious the modification of a helmet allowing relative sliding and reducing rotational acceleration of the brain to include such a connection. A POSITA would have been motivated to and found it obvious to physically connect layers with mechanical connections because doing so constituted utilizing a known structure to further reduce rotational acceleration of the brain during impact, to yield predictable results, and as a way of improving the structural integrity, and overall safety, of the helmet. Utilizing a plurality of mechanical connections between layers configured to move/slide relative to one another was well known before 2011. *See, e.g.*, Halldin-II; Weber; Kleiven; Ferrara 2006; Ferrara 2007; Madey; Hawkins; Dotsuko; Halldin-III.

Further, a POSITA would have been motivated and found it obvious to incorporate mechanical connections between layers configured to move/slide relative to one another because there were a finite number of predictably successful solutions to the problem of connecting such layers and permitting relative sliding between them in the manner the Asserted Patents discuss. For example, a POSITA would have the choice of providing mechanical connection element(s) at the periphery, e.g., at single points at the exterior of the helmet, or at multiple internal points, including within the sliding layers. A POSITA would have been motivated to incorporate multiple of such internal attachment points because they would protect against failure of one or more

attachment points and also for additional energy absorption and dissipation throughout the helmet as force is imparted on the connecting members.

Further, a POSITA would have had a reasonable expectation of successfully incorporating such internal fixations as described in the above references in a layered helmet. As discussed above, including mechanical connectors between sliding layers was well known in the field of helmet design. A POSITA would have had a reasonable expectation of successfully including additional internal physical fixation in a helmet because it was a predictable matter of routine design and implementation, including, for example, through use of typically used adhesives or attachment techniques.

For example, Halldin-II teaches a helmet with an outer shell connected to an attachment device by "fixation members." Halldin-II, [0013]. Halldin-II teaches multiple types of fixation members, including members 4a-4d that "absorb energy by deforming in an elastic, semi-elastic or plastic way." Halldin-II, [0043], Fig. 3.

Each of Halldin-II's fixation members connects layers of the helmet while (1) absorbing energy and (2) allowing relative sliding between the layers. Figures 2 and 3 teach fixation members 4a and 4b. *Id.*, [0047] (Figure 3, with fixation members, allows "energy absorbing layer 2 to slide in relation to the attachment device 3" and "[t]he fixation absorbs the rotational forces by deforming elastically or semi-elastically), Figs. 2-3 (outer layer 2 connected at portion 9 and inner attachment device 3 connected at portion 8):

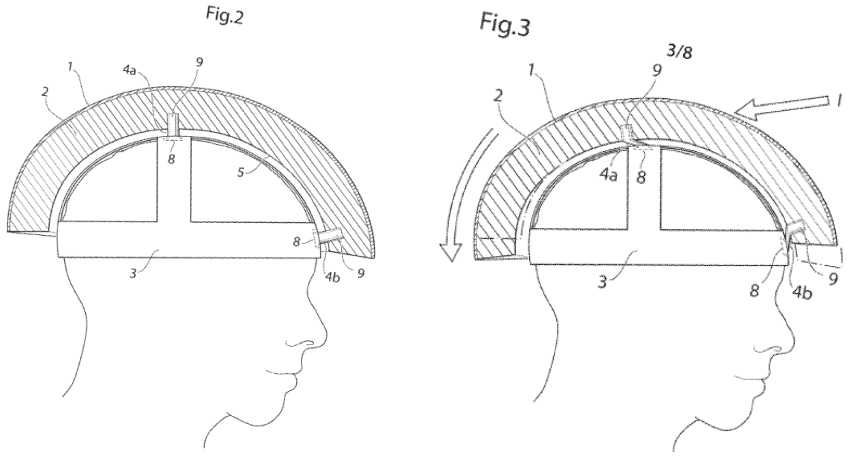

Halldin-II, Figs. 2, 3.

A POSITA would have been motivated to modify, for example, Von Holst to incorporate Halldin-II's fixation members. Von Holst and Halldin-II (which share a common inventor) are analogous to the Asserted Claims: both are directed to the same field of endeavor (helmet safety design), and both address the same problem of improved helmet sliding mechanisms. Von Holst describes layers connected through transformer layers and a connecting member, and the later-filed Halldin-II teaches additional ways to connect layers while maintaining desired sliding to address impact forces. A POSITA would have been motivated to include Halldin-II's fixation connections, which not only connect layers but additionally "absorb energy" by "deforming," Halldin-II, [0043], which would supplement the energy absorption achieved by Von Holst's sliding layers 4.

Furthermore, a POSITA would have been motivated to use Halldin-II's internal connections (i.e., members 4a-d) instead of or in addition to Von Holst's peripheral connecting member 5. Halldin-II teaches that a POSITA would have known that fixation on the periphery and internal fixation are alternatives could be used separately or together. *See* Halldin-II, [0057],

Fig. 11, [0064] (discussing combination of "master fixation member" and "additional fixation members"). A POSITA would have been motivated to improve Von Holst by adding internal fixation connections to increase the degree of connection throughout the helmet and provide additional mechanisms to absorb energy. A POSITA would have found it obvious to combine these elements as a matter of routine implementation, as their combination is a straightforward and predictable combination of known elements according to known methods to yield predictable results. Von Holst's helmet with sliding layers is ready to be improved by incorporating a layer of internal fixation members that absorbs additional energy. The known technique from Halldin-II of using fixation members to create a connecting layer and absorb energy would improve Von Holst's helmet in a similar way to Halldin-II's helmet.

A POSITA would have a reasonable expectation of success in modifying Von Holst as described. It is easy to apply aspects of Halldin-II's helmet design to Von Holst. Where Von Holst describes sliding layers, Halldin-II describes a "sliding facilitator 5 [Fig. 2] [that] may be a low friction material," which "is provided on outside of the attachment device 3 facing the energy absorbing layer 2" or, alternatively, "on the inside of the energy absorbing layer 2." Halldin-II, [0044]. Halldin-II emphasizes that its fixation members are not usable only with the specific attachment device embodiments in its specification, but instead would have been readily adaptable to other designs, like Von Holst's helmets, as a matter of routine implementation within the skill of a POSITA: "In other embodiments the attachment device 3 could be … any other design functioning as an attachment device for mounting on a wearer's head." Halldin-II, [0050]. For example, Halldin-II teaches fixation members attached to the outer energy absorbing layer via an "adhesive." Halldin-II, [0052]. Thus, a POSITA would have reasonably expected to be able to implement Halldin-II's fixation members to connect Von Holst's intermediate shell layer to the outer shell.

As another example, a POSITA would have been motivated to combine the helmet of Halldin-I with the connection of layers by fixation members of Halldin-II with a reasonable

expectation of success. In addition to the reasons discussed above with Von Holst, both references address the same problem of reducing rotational acceleration on the brain during impacts with the head. Halldin-I, 3:7-11; Halldin-II, [0005], [0047]. Both references also disclose the same solution to that problem: helmets allowing relative sliding to reduce rotational acceleration on the brain during impacts with the head. Halldin-I, 1:5-6, 2:34-35 (disclosing "a protective helmet with an outer shell and an inner shell" such that "the outer shell of the helmet can be displaced relative to the inner shell."); Halldin-II, [0001] (disclosing "a helmet comprising an energy absorbing layer, with or without any outer shell, and a sliding facilitator being provided inside of the energy absorbing layer."). Moreover, both references name the same inventor.

Additionally, Halldin-I describes that its connections are limited to being placed peripherally "where the probability of an application of an outer force is low." Halldin-I, [00014]. Later-filed Halldin-II addresses this limitation by allowing connection at numerous points within the helmet.

Halldin-II's fixation members provide an optimized connection mechanism over Halldin-I, removing the need for flaps outside of the helmet and allowing more points of connection throughout the helmet. For example, Halldin-I states that "[i]n order to further fix the intermediate layer into place it may also be attached to both of the movable layers at a peripheral edge of the intermediate layer. Preferably, the attachment is made at a part of the structure where the probability of an application of an outer force is low." Halldin-I [00014]. Halldin-I thus poses a design limitation, wherein the connection mechanisms must be placed in specific points, such as the periphery, and was ready for improvement. Halldin-II, which was filed later with a common inventor, recognizes that the connection ***could*** be at the periphery, *see* Halldin-II [0057] ("Fig. 11 shows an embodiment in which the attachment device 3 is fixated to the energy absorbing layer 2 ***at the periphery*** thereof by means of a membrane or sealing foam 24, which could be elastic or adapted for plastic deformation."), but only as one of several alternatives, most of which provide connection mechanisms throughout the helmet. A POSITA would have found it obvious to

combine these elements as a matter of routine implementation, as their combination is a straightforward and predictable combination of known elements according to known methods to yield predictable results, and Halldin-I's helmet with sliding layers is ready for improvement through incorporation of a layer of internal fixation members that additionally absorbs energy. The known technique of using fixation members from Halldin-II to create a connecting layer and absorb energy would improve Halldin-I's helmet in a similar way to Halldin-II.

A POSITA would also have had a reasonable expectation of success in modifying Halldin-I as described for similar reasons as with Von Holst. In addition, it is easy to apply aspects of Halldin-II's helmet design to Halldin-I. Halldin-II describes a "sliding facilitator 5 [Fig. 2] [that] may be a low friction material," which "is provided on outside of the attachment device 3 facing the energy absorbing layer 2" or, alternatively, "on the inside of the energy absorbing layer 2." Halldin-II [0044]. Halldin-II's low-friction layer also has certain similarities with that of Halldin-I, including having a fiber structure. *Compare* Halldin-II [0040] ("If it furthermore conceivable that the sliding is enabled by the structure of the material, for example by the material having a fiber structure such that the fibers slide against each other.") *with* Halldin-I [0004] ("The low friction material comprises fibers. By using fibers as a friction decreasing material the friction between the layers can be decreased."). Halldin-II also teaches multiple ways in which its various embodiments of fixation members could be implemented to connect Halldin-I's intermediate shell layer to the outer shell via the sliding layer. *See, e.g.*, Halldin-II [0042-43], [0052-56]. Halldin-II also emphasizes that its fixating members are not usable only with the specific attachment device embodiments in the specification: "In other embodiments the attachment device 3 could be … any other design functioning as an attachment device for mounting on a wearer's head."). Thus, a POSITA would have reasonably expected to be able to readily implement Halldin-II's fixation members to connect through Halldin-I's sliding layer and connect Halldin-I's intermediate shell layer to the outer shell (and or to the inner shell).

Additionally, a POSITA would not have been limited to the fixation members of Halldin-II, but would have found other fixation members obvious as well. A POSITA could utilize the teachings of Halldin-II to identify alternative connection mechanism(s) that would have provided mechanical connections for stability while also absorbing energy via deforming and facilitating sliding. For example, A POSITA would have similarly been motivated to modify Von Holst or Halldin-I by incorporating mechanical connection elements of Ferrara 2006 or Dotsuko. Each reference describes physical connections similar to Halldin-II. For example, Ferrara 2006 discloses protective headgear with "an outer layer 20′, an inner layer 28′", and a middle layer comprising a plurality of independent compressible members 50′ and optionally fluid such as liquid or air in interstitial region 52′ disposed between the inner and outer layers 28′, 20′. Ferrara 2006, [0053].

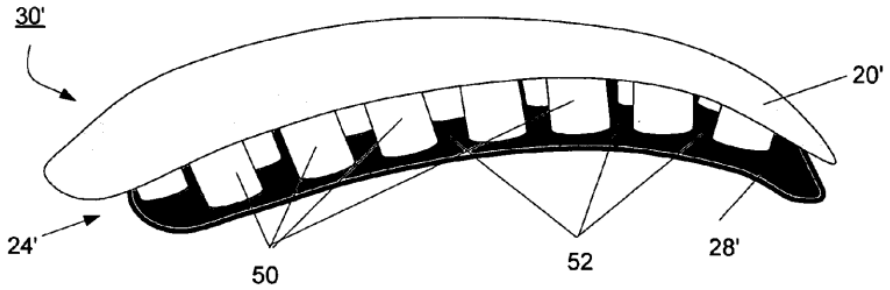

FIG. 4

Ferrara 2006, FIG. 4.

Ferrara 2006's members 50 "compress or shear independently" and "have a resilient, compressible solid or foam construction." Ferrara 2006, [0053]. This connection via members "enables the outer layer to move during impact independently of the inner layer in a scalp-like fashion." Ferrara 2006, [0056]; *see also id.*, [0032] ("respond to an impact by…rotating by the outer layer and the energy-absorbing layer with respect to the inner layer.").

Similarly, Halldin-III (which also shares a common inventor with Von Holst and Halldin-I) discloses a locking device for use in a helmet with sliding layers such as that described in EP-

A1-1246548 (the European counterpart to Von Holst). Halldin-III at [0012-13]. The locking device has a "lower portion of the layer-guiding member 10 [that] can be elastic in its longitudinal direction L and in the direction of propagation plane P of the inner layer and the outer layer 4, 6."

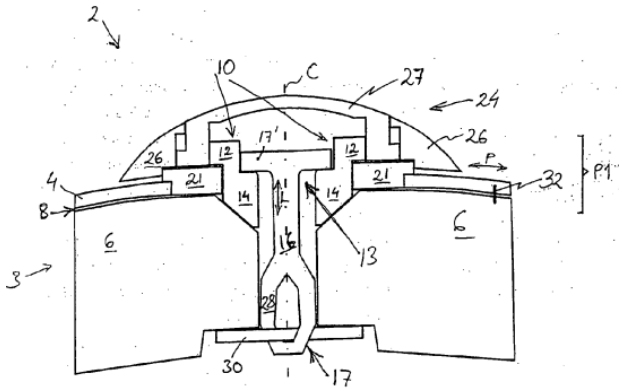

FIG. 1A

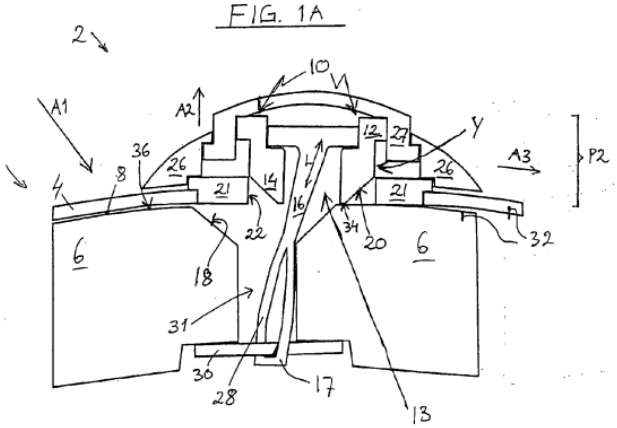

FIG. 1B

Halldin-III at [0021], Figs. 1A-B.

Similarly, Dotsuko discloses a helmet with an inner liner 50 connected to liner 40 and outer shell 20 with liner 30 comprising a plurality of elastic straps and an elastic body disposed between the inner and outer layers.

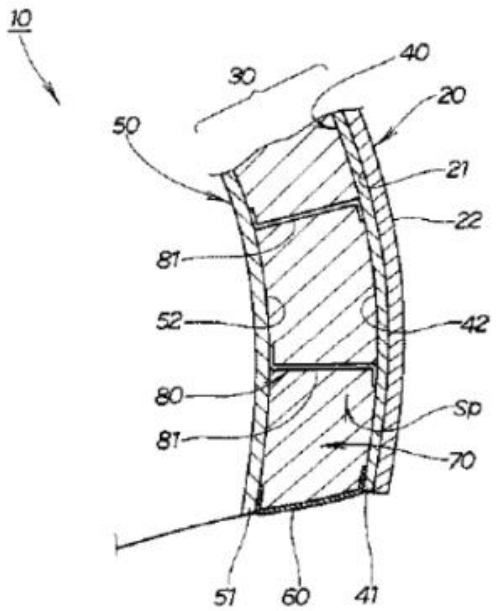

Dotsuko, [0013], [0017].

A POSITA would have been motivated to modify Von Holst's and/or Halldin-I's sliding layers to additionally include Ferrara 2006's or Dotsuko's compressible members and elastic straps with a reasonable expectation of success for similar reasons as with Halldin-II. Additionally, Ferrara 2006's compressible members would readily fit into Von Holst's and Halldin-I's sliding layer: Ferrara 2006's members can vary in lengths, and "the outer layer 20′ and inner layer 28′ approach and may touch each other so that any gap between the layers 20′, 28′ either is imperceptible or does not exist." Ferrara 2006 at [0056]. And further with respect to Von Holst, given that Ferrara 2006 further utilizes fluids, similar to Von Holst, a POSITA would have been motivated to incorporate members similar to those used in Ferrara 2006 to provide additional connection points throughout the sliding layer for stability and energy absorption while still "enabl[ing] the outer layer to move during impact independently of the inner layer in a scalp-like fashion." Ferrara 2006 at [0056].

Similarly, Halldin-III's locking device is expressly described as fitting within a helmet similar to Von Holst, and which is has similar key features as Halldin-I's helmet (e.g., and outer and inner layer with a sliding layer that may include, for example, "[t]eflon, oil, air or the similar.") Halldin-III recognizes various advantages of its device by which a POSITA may be motivated to incorporate it into Von Holst or Halldin-I, including a design where "the energy-absorbing properties of the protective helmet only are activated when the helmet is subjected to oblique impacts that exceed a certain power" and one where it is easier to tell "if a displacement of the layers has taken place and the energy-absorbing function has been released, whereby the helmet is consumed" and must be replaced. Halldin-III at [0007-8]. A POSITA would thus have been motivated to incorporate Halldin-III's locking device into either Von Holst or Halldin-I, and they would have had a reasonable expectation of successfully doing so for similar reasons as described above.

Similarly, Dotsuko describes an additional connection mechanism via "multiple straps 81 … made of an elastic material such as rubber. As these strap 81 [] have certain elongation properties, they allow a certain degree of relative rotation of the shell 20 and the outer liner 40 with respect to the inner liner 50, while preventing excessive relative rotation beyond this range." Dotsuko at [0017]. Dotsuko's elastic straps thus perform a similar function as Von Holst's and Halldin-I's periphery connecting members, which counteract mutual displacement among the sliding layers and deform to absorb energy, but provides multiple points over which energy may be absorbed via deformation. A POSITA would thus have been motivated to incorporate Dotsuko's elastic straps into either Von Holst or Halldin, and they would have a reasonable expectation of success in doing so for similar reasons as described above.

As another example, a POSITA would have been motivated to modify the energy absorbing layers of the Schutt Ion 4D helmet to include sliding layers operable to absorb rotational and shear forces as disclosed in the TSG Kraken and POC Trabec. The Schutt Ion 4D is designed to absorb energy by flexing. G. Alston Rush et al., *Modified Drop Tower Impact Tests For American*

Football Helmets, J. Visualized Experiments (120):53929 (Feb. 19, 2017), https://pmc.ncbi.nlm.nih.gov/articles/PMC5407596/ (RVST00002711-RVST00002733). The POC Trabec and TSG Kraken are designed to reduce rotational force to the brain through a liner designed to slip on impact. Bicycle Helmet Safety Institute, *Bicycle Helmets for the 2010 Season*, Helmets.org (Feb. 5, 2010), https://web.archive.org/web/20100205103230/http:/www.helmets.org:80/ helmet10.htm (RVST00001316-RVST00001411). Thus, a POSITA would have been motivated to improve the Schutt Ion 4D's reduction of impact forces by including the slidable layers in the POC Trabec and TSG Kraken in order to ensure the helmet could absorb rotational and shear forces.

A POSITA would have a reasonable expectation of success in modifying the Schutt Ion 4D helmet to include slidable layers because it already includes an intermediate flexible layer that allows movement to reduce impact forces.

iii) A liner layer that conforms to and secures the human head would have been an obvious feature of helmets allowing relative sliding and reducing rotational acceleration of the brain

To the extent Plaintiff contends that the prior art identified as anticipating the claims does not disclose a liner layer that conforms to and secures the human head while an outer layer is allowed to slide, a POSITA would have found obvious the modification of a helmet allowing relative sliding and reducing rotational acceleration of the brain to include such a lining layer. A POSITA would have found it obvious to include a lining layer because doing so constitutes utilizing a known structure to improve the comfort and safety of another known safety structure, to yield predictable results, and because a POSITA would have understood that it would improve comfort, fit, and security of the inner layer on the head, and increase the reduction of rotational acceleration of the brain. Further, a POSITA would have recognized that lining layers aid in securing the inner protective shell to the human head while the outer protective shell is allowed to move relative to the inner protective shell. By nature of the inner liner layers being conformed to

a human head, they further assist in securing the inner protective shell by improving fit, and a POSITA would have been motivated to incorporate a lining layer for this additional reason.

A POSITA would also have had a reasonable expectation of success that a lining layer could be incorporated and that the comfort and safety of the helmet would be improved because liner layers conforming to the human head were known features of almost all commercially successful helmets of the time that had been demonstrated to create lightweight, strong, and comfortable lining layers that connect the helmet with the head, thus improving comfort and safety. As discussed in Section V, foam comfort liners are standard in most modern helmets. *See, e.g.*, Newman at 47 ("Modern (i.e. post 1975) cycling helmets have typically used small polyester foam pads that can be strategically placed inside the helmet by the wearer to accommodate different head shapes and sizes."); Bosch, 2 ("The purpose of the comfort padding liner is to increase the wearing comfort of the helmet and to provide a good fit on the head. It consists of low-density, flexible, open-celled, polyurethane or PVC foams and is often faced with a cloth layer."); Weber at [0045] (helmet contains "a 'comfort' liner 123 configured to closely surround the head of the wearer"), [0036], [0050]; Piper at [0109] (disclosing a "comfort liner 212 next to the head 200 of the wearer" that is, e.g., "lower density, open-cell foam material that easily conforms to the head"); Von Holst at 4:26-29 (describing an inner shell 3 with softer inner layer 3' "made of … polyurethane foam"); Puchalski at 1:52-55 (a "padding or cushioning may also be provided along the inside of the shell for increased comfort, better fit and to assist in the absorption of any impact forces"), cl. 9; Ferrara 2006 (US2006/0059606) at [0060] ("[I]n FIG. 6, a compressible (e.g., foam) internal liner 32′ can then be added (step 80) to the multilayer shell 30′….The shape of the internal liner 32′ conforms to the general shape of the shell 30′ and to the shape of a wearer's head."); Copeland (US2006/0070170) at [0022-23] (describing "[a] shock absorber insert 18 [] received in … recesses" that "includes a foam member 19"), cl. 17, Fig. 2); Ferrara 2007 (US2007/0190293) at [0101] ("Therefore, the bellows capsules as a whole provide a relatively soft and comfortable inner liner next to the wearer's head."); Madey at [0025] ("Helmet 40 comprises an inner helmet

layer (e.g., an energy-absorbing layer) 41, a helmet retention system (e.g., straps 42 and foam padding inserts, not shown) to affix inner helmet layer 41 to a wearer's head…."); the POC Trabec Race, POC Receptor Backcountry MIPS, POC Cortex DH, Xenith X1, the TSG Kraken, Burton RED Hi-Fi, Lazer Superskin, and Back on Track EQ2 helmets.

A POSITA would have understood that user comfort is a critical feature for helmet uptake and usability and that comfort padding/liners that conform to the human head provide such comfort. Thus, a POSITA viewing a disclosure that does not expressly describe a comfort padding/lining layer would have been motivated and would have found it obvious to look to other references to incorporate this feature. The reasons for this were well established in the art. For example, comfort liners were described as providing general comfort and also improving fit for users, in addition to being configured to closely secure the helmet inner layers to the wearer in helmets with layers allowing for relative sliding. Madey at [0025] ("Helmet 40 comprises an inner helmet layer (e.g., an energy-absorbing layer) 41, a helmet retention system (e.g., straps 42 and foam padding inserts, not shown) to affix inner helmet layer 41 to a wearer's head…."); Weber at [0045] (describing "a 'comfort' liner 123 configured to closely surround the head of the wearer"); *see also id.* at [0036], [0050]. In addition, foam-based comfort liners were understood to "easily comform[] to the head" and "provide[] sweat and heat management characteristics." Piper at [0109]. A POSITA would have been motivated to incorporate a comfort liner such as that described in Piper into other helmets to provide comfort, improve fit, and achieve heat and sweat management. A POSITA would have understood that reducing heat by using a foam comfort liner would also enhance helmet safety by: (1) reducing risks of heat stress for the user and (2) increasing helmet use on hot days, when users might otherwise find it too uncomfortable to wear.

A POSITA would further have been motivated and found it obvious to include a lining layer that conforms to the human head because there were a finite number of predictably successful solutions to the problem of creating a flexible, comfortable, lining layer that connects to the head

while reducing heat and managing sweat, of which comfort liners, and specifically foam comfort liners, were one. Using lining layers in helmets would have constituted utilizing a known structure in a known way to yield predictable results. As discussed above, foam-based comfort liners/lining layers were standard in modern helmets, and indeed comfort liners/lining layers in general were standard in helmet design before 2011. A POSITA would have a finite number of choices of whether to include a lining layer at all (either including one or not including one) as well as what material to use (foam-based materials covered in fabric are a near universal material), and implementing a foam-based lining layer would have yielded predictable results of improved comfort and safety.

A POSITA would have had a reasonable expectation of success of incorporating a comfort liner/lining layer in a helmet of any of the references identified herein. As discussed above, liners were standard in modern helmets, and a POSITA would thus already know how to incorporate such liners into other helmets. Indeed, Ferrara 2006 teaches how a POSITA might incorporate such a helmet. Ferrara 2006 at [0060] (describing FIG. 6) ("The internal liner 32′ is attached (e.g., with an adhesive) to an internally facing surface of the inner layer 28′. The shape of the internal liner 32′ conforms to the general shape of the shell 30′ and to the shape of a wearer's head."). A POSITA would also have understood, as a matter of routine implementation, that there were also alternative ways to incorporate such comfort liners/lining layers, such as with various fixations (e.g., snap fixation) or by incorporating them into recesses within an inner layer (*see, e.g.*, Copeland at [0022-23]).

For example, a POSITA would have been motivated to combine the comfort liner/liner layer of Piper, Ferrara 2006, Ferrara 2007, Puchalski, Copeland, or Madey, or of the POC Trabec Race, POC Receptor Backcountry MIPS, POC Cortex DH, Xenith X1, the TSG Kraken, Burton RED Hi-Fi, Lazer Superskin, and Back on Track EQ2 helmets with the helmets of at least, e.g., Weber, Kleiven, Hawkins, Ferrara 2007, Halldin-II, Halldin-III, Madey, Puchalski, Von Holst, Halldin-I, or Dotsuko, or with the Lazer P-Nut, Schutt Ion 4D, or Schutt DNA Pro Plus helmets.

Each is analogous art to the claims of the Asserted Patents. All references address the same or similar problem as the Asserted Patents, such as reducing rotational acceleration on the brain during impacts with the head or shearing in response to impacts. *See, e.g.*, Weber, [0002] (disclosing "protective helmets that protect the human head against repetitive impacts so as to significantly reduce the likelihood of both translational and rotational brain injury and concussions"); Kleiven, [0002] (directed to "an improved material/structure that reduces angular/rotational motion or acceleration of the human brain and body caused by oblique impact. In the material/structure, there is an inner layer and an outer layer and a separation between the inner layer and the outer layer by spikes that are constructed so that they permit displacement of the outer layer relative to the inner layer, hereby reducing the force from an oblique impact."); Hawkins at [0006] (describing "[a] method of absorbing compression forces imparted to a surface by an impacting object in accordance with one exemplary implementation of a present invention includes converting at least some compression forces into shear forces while the object is in contact with the surface and imparting a rotational force to the object while the object is in contact with the surface"); Ferrara 2006 at [0005] (recognizing that currently marketed helmets "generally do not diminish the rotational forces experienced by the brain" and providing a solution of a middle layer that can "resiliently shear with respect to the inner layer in response to a tangential impact to the outer layer"); Piper, [0002] (disclosing "protective headgear intended to reduce angular acceleration of the human brain caused by an impact . . . ."); Piper, [0005] ("Acceleration along an arc is called angular or rotational acceleration."); Puchalski at 12:55-58 (describing relative sliding between shell layers); Copeland at [0022-23] (describing foam members for shock absorption and additional comfort); Madey at [0024] ("[T]he present invention provides a means of diverting and/or absorbing tangential impact energy before that energy is translated to the wearer's head and neck."); Ferrara 2007 at [0086] (describing helmets with cells that "will shear relative to the inner layer 106 in response to tangential components of an impact, absorbing those components as well"); Halldin-II at [0042-43] (describing a helmet with an outer and inner layer,

a sliding facilitator, and fixation members for "providing slidability"); Halldin-III at [Abstract] (describing an improved locking device and helmet "for facilitating displacement of the outer layer relatively the inner layer during an oblique impact towards the protective helmet"); Dotsuko at [0006] ("The present invention addresses the problem of providing a technology that enables a helmet to be securely mounted on the head of an occupant and to efficiently absorb both impact energy in a direction perpendicular to the outer surface of the shell of the helmet and impact energy in a direction along the outer surface of the shell of the helmet.").

A POSITA would have found it obvious to combine these elements as a matter of routine implementation, as their combination is a straightforward and predictable combination of known elements according to known methods to yield predictable results, and the above comfort liners/lining layers are ready for improvement through incorporation into any of the above helmets. The known technique of using comfort liners to improve fit, comfort, and heat management would improve the above mentioned helmets in similar ways as those disclosing comfort liners.

As one example, Weber discloses "a 'comfort' liner 123 configured to closely surround the head of the wearer," Weber, [0044-0045], but it does not include additional details regarding such comfort liner. Piper (for example) provides those details, including its materials (e.g., "lower-density, open-cell foam material") and its characteristics ("provides sweat and heat management characteristics"). Piper, [0109]. Similarly, Ferrara 2006 describes how "a compressible (e.g., foam) internal liner 32′ can then be added (step 80) to the multilayer shell 30′. FIG. 6 shows a cross-section of a portion of the shell 30′ and of the internal liner 32′. The internal liner 32′ is attached (e.g., with an adhesive) to an internally facing surface of the inner layer 28′. The shape of the internal liner 32′ conforms to the general shape of the shell 30′ and to the shape of a wearer's head." Ferrara 2006 at [0060]. Similarly, Puchalski states that "padding or cushioning may also be provided along the inside of the shell for increased comfort, better fit and to assist in the absorption of any impact forces." Puchalski at 1:53-55. Copeland also describes how a helmet has inserts "include[ing] a foam member," which is "manufactured from a softer foam material

than base 12 for additional comfort." Copeland at [0023]. And Madey describes how a "[h]elmet 40 comprises an inner helmet layer (e.g., an energy-absorbing layer) 41, a helmet retention system (e.g., straps 42 and foam padding inserts, not shown) to affix inner helmet layer 41 to a wearer's head…." Madey at [0025]. A POSITA would have been motivated to modify Weber's helmet to incorporate a more-specific foam comfort liner as described in Piper, Ferrara 2006, Puchalski, Copeland, or Madey to achieve comfort, fit, and heat and sweat management. A POSITA would have found it obvious to combine these elements as a matter of routine implementation, as it is a straightforward and predictable combination of known elements according to known methods to yield predictable results, and Weber's general comfort liner is ready for improvement through incorporation of Piper's, Ferrara 2006's, Puchalski's, Copeland's, or Madey's liner. This known technique of adding a user comfort layer would improve Weber's helmet in a similar way to Piper or Ferrara.

Further, a POSITA would have had a reasonable expectation of success in combining the comfort liner/lining layer of Piper, Ferrara 2006, Puchalski, Copeland, or Madey with the helmet of Weber because such comfort liners were a known structure that had been demonstrated to improve safety and comfort, including heat and sweat management. Additionally, Ferrara 2006 expressly provides teachings on how a lining layer could be incorporated into a helmet, Ferrara 2006 at [0060], as does Copeland, Copeland at [0022-23], and a POSITA would have reasonably expected to be able to incorporate a lining layer into Weber in a similar way.

For another example, a POSITA would have been motivated to combine the comfort liner of Piper, Ferrara 2006, Puchalski, Copeland, or Madey with the helmet of Kleiven. Each is analogous art to the claims of the Asserted Patents. As with the claims of the asserted patents, Kleiven addresses the problem of reducing rotational acceleration on the brain during impacts with the head. Kleiven is directed to the field of "a material/structure that protects the head and body in a collision or against other types of impact. Specifically, it relates to an improved material/structure that reduces angular/rotational motion or acceleration of the human brain and

body caused by oblique impact." Kleiven, [0002]. Kleiven also addresses that problem in the same way as the claims of the asserted patents, by allowing relative sliding to reduce rotational acceleration on the brain during impacts with the head. Kleiven, [0002] ("In the material/structure, there is an inner layer and an outer layer and a separation between the inner layer and the outer layer by spikes that are constructed so that they permit displacement of the outer layer relative to the inner layer, hereby reducing the force from an oblique impact.").

A POSITA would have been motivated to combine Kleiven's helmet with Piper's, Ferrara 2006's, Puchalski's or Copeland's comfort liner for all the reasons described above. Further, Kleiven recognizes that foam on the interior of a helmet can "improve[] the capacity of the headgear to conform to the head." Kleiven, [0014]. This would have motivated a POSITA to look to disclosures of such interiors in helmets, especially such disclosures that solve the same problem. Piper's comfort liner is also positioned under an inner layer similar that disclosed in Kleiven, further motivating a POSITA to combine the two. As discussed above, a POSITA would also have reasonably expected success due to these similarities and for additional reasons: comfort layers/lining layers were standard in helmets, and Piper's, Ferrara 2006's, Puchalski's, Copeland's, or Madey's comfort liner would easily fit into Kleiven's design. A POSITA combining these references would also reasonably expect success because such comfort liners were a known structure that had been demonstrated to improve safety and comfort, including heat and sweat management, including all the reasons described above, and addition of such a foam liner would have been a matter of predictable and routine implementation within the knowledge and skill of a POSITA.

As another example, a POSITA would have been motivated to combine Hawkins' helmet with Piper's, Ferrara 2006's, Puchalski's, Copeland's, or Madey's comfort liner for all the reasons previously described. Further, Hawkins describes a helmet with "machine elements" and matrix material (such as fluids) that can shear and cause relative sliding in response to impact forces may "be stacked so that there will be more than one layer of machine elements." Hawkins at [0050],

[0053]; [0048]. Although Hawkins does not expressly describe a foam-based comfort lining/lining layer, a POSITA would have been motivated to incorporate such a comfort liner from Piper, Ferrara 2006, Puchalski, Copeland, or Madey in Hawkins' helmet. Hawkins describes the specifics of its force diversion apparatus in detail across multiple implementations, but it does not provide further detail on other components of a helmet. A POSITA reading Hawkins would have understood that comfort liners/lining layers to conform to a head are desirable and ubiquitous in helmet design and would thus look to references such as Piper, Ferrara 2006, Puchalski, Copeland, or Madey for teachings on how to incorporate this feature. A POSITA would also have reasonably expected success in incorporating a foam-based comfort liner/lining layer into Hawkins for the same or similar reasons as described above.

As another example, a POSITA would have been motivated to combine Ferrara 2007's helmet with Piper's, Ferrara 2006's, Puchalski's, or Copeland's comfort liner for all the reasons previously described. Ferrara 2007 describes a helmet with "cells" that can "shear relative to the inner layer 106 in response to tangential components of an impact, absorbing those components as well." Ferrara 2007 at [0086]. Ferrara 2007 describes lining layers in various embodiments, *e.g.*, Ferrara 2007 at [0097] (inner components "together form a conformable inner liner"), but it does not expressly describe this feature in all embodiments or specify that the inner liner is foam. A POSITA would thus have been motivated to look to other references such as Piper, Ferrara 2006, Puchalski, or Copeland to identify other implementations of comfort liners and materials to use for such comfort liners. As discussed above, a POSITA would also have reasonably expected success due to these similarities and for additional reasons: comfort layers/lining layers were standard in helmets, and Piper's, Ferrara 2006's, Puchalski's, Copeland's, or Madey's comfort liner would easily fit into Ferrara 2007's design. A POSITA combining these references would also reasonably expect success because such comfort liners were a known structure that had been demonstrated to improve safety and comfort, including heat and sweat management, including all

the reasons described above, and addition of such a foam liner would have been a matter of predictable and routine implementation within the knowledge and skill of a POSITA.

As another example, a POSITA would have been motivated to combine Dotsuko's helmet with Piper's, Ferrara 2006's, Puchalski's, or Copeland's comfort liner for all the reasons previously described. Dotsuko describes a helmet with multiple protective layers that can move/slide relative to one another, but it does not expressly discuss a foam comfort liner/liner layer. As discussed above, foam comfort liners/liner layers were standard across all fields of helmets, including motorcycle/racing helmets which Dotsuko discusses. A POSITA would have been motivated to incorporate such a comfort liner from Piper, Ferrara 2006, Puchalski, Copeland, or Madey in Dotsuko's helmet. A POSITA reading Dotsuko would have understood that comfort liners/lining layers to conform to a head are desirable and ubiquitous in helmet design and would thus look to references such as Piper, Ferrara 2006, Puchalski, Copeland, or Madey for teachings on how to incorporate this feature. A POSITA would also have reasonably expected success in incorporating a foam-based comfort liner/lining layer into Dotsuko for the same or similar reasons as described above.

As another example, a POSITA would have been motivated to combine the Lazer P-Nut, Schutt Ion 4D, or Schutt DNA Pro Plus helmets with Piper's, Ferrara 2006's, Puchalski's, Copeland's, or Madey's comfort liner for all the reasons previously described. A POSITA would also have been motivated to combine the Lazer P-Nut, Schutt Ion 4D, or Schutt DNA Pro Plus helmets with the foam liners disclosed in the POC Trabec Race, POC Receptor Backcountry MIPS, POC Cortex DH, Xenith X1, the TSG Kraken, Burton RED Hi-Fi, Lazer Superskin, and Back on Track EQ2 helmets, for the reasons described, including that a POSITA would have known these foam-based comfort liners are a common and desirable helmet design element. A POSITA would have had a reasonable expectation of success because comfort liners of this type were a known structure for improving safety and comfort and their inclusion would have been a predictable matter of routine implementation for a POSITA.

iv) It would have been obvious to incorporate elastic bands or other elastomeric elements as a mechanical connection element between sliding layers.

To the extent Plaintiff contends that the prior art identified as anticipating the claims does not disclose a shear mechanism comprising a plurality of elastic bands connecting an inner layer to an outer layer, a POSITA would have found it obvious to incorporate such elastic bands and would have understood the benefits of doing so.

A POSITA would have been motivated to incorporate elastomeric connectors as well as elastic bands to mechanically connect sliding layers in a helmet. Particularly, a POSITA would have been motivated to incorporate elastic bands, including those of Dotsuko, Halldin-II, Halldin-III, Kleiven, or Erb, to mechanically connect sliding layers in a helmet, including those of Weber, Von Holst, Halldin-I, Halldin-II, Halldin-III, Kleiven, Hawkins, Ferrara 2006, Ferrara 2007, Madey, or Puchalski. Use of elastomeric connectors between sliding layers was ubiquitous in helmet design before 2011. *See, e.g.*, Weber at [0062] ("Similarly, the isolation dampers 200 can be formed of a wide variety of elastomeric materials, including MCU (micro-cellular urethane), EPU, natural rubber, synthetic rubbers, foamed elastomers of various chemical constituents, solid cast elastomers of various chemical constituents, encased liquids, gels or gases providing flexible structures, and any flexible assembly of any other kind that will provide the desired degree of omnidirectional movement."); Ferrara 2006 at [0054] (describing how "[i]n a preferred embodiment, this compressible material is a thermoplastic elastomer (TPE)"); Kleiven at [0048], [0020] (describing spikes/beams that are "***flexible***, plasticizing, yielding or frangible in order to absorb/reduce the force of an impact towards the material," and "designed to be thin/slim and can be made of flexible polymer materials such as plastics, rubber or fibers"); Halldin-II at [0043] (describing fixation members that can "deform[] in an elastic, semi-elastic or plastic way"); Dotsuko at [0017], [0025] (describing "multiple straps" that "are made of an elastic material such as rubber"); Madey at cl. 18 ["The helmet of claim 16, wherein the hyper-elastic structure comprises an elastomer-based lamellar structure."), [0037]; Halldin-III at cl. 1, FIGs. 1A-B

(describing a locking device that has a "layer-guiding member 10 [that] can be elastic in its longitudinal direction (L) and in the direction of propagation plane (P) of the inner layer and the outer layer"). Similarly, elastic bands were used in helmet design generally. *See, e.g.*, US2013/0333100 ("Erb") ("To help further connect[] the front liner 62 to and over the front pad 32, and as shown in FIG. 18, a pair of elastic strapping or bands 62 b are fixed at opposite sides to the front liner 62 and engage around the side parts 32 a of the front pad 32 for removable connecting the front liner to the front pad, the outer sheets 42 a of the sides parts 32 a of the front pad 32, as shown in FIG. 6, each having a pair of opposite notches 42 e and 42 f for trapping the elastic band to keep the front liner firming held to and centered on the front pad 32."). Furthermore, Dotsuko, Kleiven, Halldin-II, and Madey also teach elastic structures that are more similar to "elastic bands" than what Plaintiff has alleged to be elastic bands in the accused products. And to the extent that these do not disclose elastic bands, a POSITA would have found it obvious to utilize elastic bands as alternative flexible mechanical connections between sliding layers. A POSITA would have been motivated to incorporate such elastic bands because, as the references above teach, elastic bands provide flexible connections between layers to allow sliding, but also to absorb energy by stretching or deforming, and to stop sliding. As Dotsuko describes, elastic straps "have certain elongation properties," and Halldin-II, Kleiven, and Madey each describe how their elastic fixation members, spikes/thin beams, or hyper-elastic columns can absorb energy by elastic deformation. Halldin-II at [0043]; Kleiven at [0048]; Madey at [0037]. As discussed above, incorporating multiple flexible connecting members between sliding layers would have been obvious, and a POSITA would have similarly been motivated to specifically use elastic bands for the flexibility and energy absorbing properties taught in Dotsuko, Halldin-II, and Kleiven.

A POSITA would have reasonably expected success in incorporating any of the above elastomeric elements and elastic straps into any helmet previously discussed as fixation members between layers of the helmet. Elastic bands are widely applicable to and compatible with other components of sliding layers: Kleiven utilizes them with fluid/air compartments, Kleiven at [0039-

40], Halldin-II utilizes them with low-friction sliding facilitators, Halldin-II at [0043-44], and Dotsuko utilizes them with an "elastic body" that can be "composed of, for example, resin powder, a grease-like substance, or a gel-like substance," Dotsuko at [0016]. A POSITA would have been well equipped to incorporate these elastic bands or use the above teachings to identify and incorporate alternative elastic bands as mechanical connector elements in a helmet as a predictable matter of routine implementation.

A POSITA would have found it obvious to combine these elements as a matter of routine implementation, as their combination is a straightforward and predictable combination of known elements according to known methods to yield predictable results, and the above elastomeric elements are ready for improvement through incorporation into any of the above helmets. The known technique of using elastomeric elements and elastic bands to provide flexible and absorptive connections between sliding layers would improve the above mentioned helmets in similar ways as those disclosing such elastomeric elements or elastic bands.

v) Using different types of materials for helmet layers to create shell layers would have been an obvious feature of helmets to reduce forces on the head and brain and provide safety

To the extent Plaintiff contends that the prior art identified as anticipating the claims does not disclose an outer, middle, or inner "protective shell," it would have been obvious to use protective shells. At least Weber, Von Holst, Halldin-I, Halldin-II, Halldin-III, Kleiven, Hawkins, Ferrara 2006, Ferrara 2007, Dotsuko, Madey, Nichols, Puchalski, the POC Trabec Race, the POC Receptor Backcountry MIPS, the POC Cortex DH, the Schutt Ion 4D Helmet, the Schutt DNA Pro Plus, the TSG Kraken, and the Burton RED Hi-Fi- Helmet all disclose two or more distinct protective layers that move/slide relative to one another in the manner the patent discusses. *See, e.g.*, '635 patent at 11:3-12 (discussing that outer, middle, and inner "shells" "may vary in weight and strength," and "may" have certain characteristics); *id.* at 7:58-8:3 (describing materials for shell layers "may" include "plastics, resins, metal, composites," as well as other materials, i.e.,

"etc"). Additionally, Von Holst expressly describes each of its protective layers as "shells." *See, e.g.*, Von Holst at 6:2-12. Similarly, Nichols describes a helmet with three shell layers. Nichols at Fig. 6 (depicting shells 32 and 31 as well as a third shell in the form of helmet 12); *id.* at cl. 1 ("protective headgear adapted to fit over a hard shell football helmet…."). To the extent Plaintiff contends that the claimed "shell layer" requires a layer made of a particular material or shape to prevent injury and/or absorb energy, a POSITA would have been motivated to modify Weber, Von Holst, Halldin-I, Halldin-II, Halldin-III, Kleiven, Hawkins, Ferrara 2006, Ferrara 2007, Dotsuko, Madey, Nichols, or Puchalski to include any material and/or shape to have the helmets' layers be "shell layers" based on Nichols or Von Holst. A POSITA would have found it obvious to combine these elements as a matter of routine implementation, as it is a straightforward and predictable combination of known elements according to known methods to yield predictable results, and the above-mentioned helmets' layers are ready for improvement through incorporation of "shells" as described in Von Holst, Nichols, or the state of the art to reduce the forces on the head and brain, including penetrating forces, and to provide safety. Design modifications often require tradeoffs and material selection for hardness, shape, and the ability to absorb/dissipate energy from an impact would have been within a POSITA's skill set as of the priority date. This known technique of adding shells would improve the above-mentioned helmets in a similar way to Von Holst, Nichols, or the state of the art.

A POSITA would further have had a reasonable expectation of successfully incorporating such components into one of the above-mentioned helmets. Incorporating additional or alternate materials into a layer or changing the shape of a layer was a design choice and selecting the appropriate materials to make an inner, middle, and outer shell in a helmet was a predictable matter of routine implementation for a POSITA.

vi) <u>Incorporating a shear mechanism into the helmets disclosed in US 2013/0019384 ("Knight") would have been obvious.</u>

As discussed in Section III.E. above, all Asserted Claims of the '909 Patent are entitled to a priority date of no earlier than July 24, 2015. Thus, U.S. Patent Application Publication No. 2013/0019384 ("Knight") is prior art to the '909 Patent. As discussed above, Knight does not disclose or describe a "shear mechanism." It would, however, have been obvious to modify Knight to incorporate a shear mechanism such as those disclosed in at least Weber, Kleiven, Ferrara 2006, Ferrara 2007, Puchalski, Dotsuko, Madey, Hawkins, Von Holst, Halldin-I, Halldin-II, Halldin-III. As discussed in Section V.B. above, numerous helmets had been disclosed that utilized shear mechanisms. For example, Weber discloses isolation dampers that can "flex, bend, and/or compress to absorb the energy of impacts to the helmet from all directions, and thereby enable the inner and intermediate liners 122 and 126 to move relative to each other and/or the outer liner 128" as well as a space that "can comprise an air gap, or can be completely or partially filled with any suitable material in any form, including without limitation, a liquid, gel, foam, or gas cushion." Weber at [0046], [0049]. Similarly, Madey discloses an "interface layer" with "a distensible flexible envelope filled to a desired thickness with a viscous medium such as a gel" with the envelope secured to an inner and outer layer, "allow[ing] a rotational displacement R of the outer helmet layers with respect to the inner helmet layers." Madey at [0028], [0030]. Madey also discloses an interface layer with "a lamellar structure of hyper-elastic columns" that "bend and stretch in response to [a] tangential forces, thereby deflecting and partially absorbing the tangential force." Madey at [0037]. Ferrara 2007 describes a layer of cells that allow the "outer shell 204 [to] not only deform in response to radial components of an impact, which components will be effectively absorbed by the cells 10 or 50 and inner layer 206, but also will shear relative to the inner layer 106 in response to tangential components of an impact, absorbing those components as well." Ferrara 2007 at [0086].

A POSITA would have been motivated and found it obvious to incorporate a shear mechanism such as those described above into Knight. Knight describes an "energy and impact transformer" and "energy and impact transformer layer," *e.g.*, Knight at [0038], [0055], but it does

not describe how those may have associated with or included in a "shear mechanism." Weber, Kleiven, Ferrara 2006, Ferrara 2007, Dotsuko, Madey, Hawkins, Von Holst, Halldin-I, and Halldin-II provide those details as discussed above and in their associated charts, and a POSITA would have been motivated to modify Knight to incorporate those shear mechanisms. A POSITA would have found it obvious to combine these elements as a matter of routine implementation, as their combination is a straightforward and predictable combination of known elements according to known methods to yield predictable results, and Knight's helmet with sliding layers is ready for improvement through incorporation of a shear mechanism. The known technique of using the components and structures from the helmets discussed above to create a shear mechanism would improve Knight's helmet in a similar way to these other helmets.

A POSITA would have had a reasonable expectation of successfully incorporating such shear mechanisms into Knight's helmet because doing so was a predictable matter of routine design and implementation, including, for example, by placing the materials and structures described in the helmets discussed between Knight's inner and outer helmet layers.

D. Invalidity Under 35 U.S.C. § 112

Subject to the reservation of rights above, for the reasons set forth below, the asserted claims of the Patents-In-Suit are invalid. To comply with the written description requirement of 35 U.S.C. § 112, a written description must "reasonably convey[] to those skilled in the art that the inventor had possession of the claimed subject matter as of the filing date." *Ariad*, 598 F.3d at 1351 (*en banc*). Under the enablement requirement of § 112, a specification must "teach those skilled in the art how to make and use the full scope of the claimed invention without 'undue experimentation.'" *Streck, Inc. v. Res. & Diagnostic Sys., Inc.*, 665 F.3d 1269, 1288 (Fed. Cir. 2012). "Whether undue experimentation is needed is not a single, simple factual determination, but rather is a conclusion reached by weighing many factual considerations." *In re Wands*, 858 F.2d 731, 737 (Fed. Cir. 1988). The factors to be considered in determining whether a disclosure would require undue experimentation, known as the "*Wands* factors," "include (1) the quantity of

experimentation necessary, (2) the amount of direction or guidance presented, (3) the presence or absence of working examples, (4) the nature of the invention, (5) the state of the prior art, (6) the relative skill of those in the art, (7) the predictability or unpredictability of the art, and (8) the breadth of the claims." *Id.*

Under § 112, a patent claim is invalid for indefiniteness if its language, when "read in light of the specification . . . and the prosecution history, fail[s] to inform, with reasonable certainty, those skilled in the art about the scope of the invention." *Nautilus, Inc. v. Biosig Instruments, Inc.*, 572 U.S. 898, 901 (2014). Claim terms may also be indefinite "if a term does not have proper antecedent basis where such basis is not otherwise present by implication or the meaning is not reasonably ascertainable." *Halliburton Energy Servs., Inc. v. M-I LLC,* 514 F.3d 1244, 1249 (Fed. Cir. 2008).

1. Lack of Written Description

For at least the reasons set forth below, the Patents-In-Suit are invalid as lacking written description as of any possible priority date because the Patents-In-Suit and the applications to which the Patents-In-Suit claim priority fail to show that the named inventor was in possession of the full scope of the asserted claims.

a) The '319 patent

Asserted claims 11 and 17-20 of the '319 patent are invalid as lacking written description support because the named inventor has not shown possession of the full scope of the recited "outer energy transformer layer" or "inner energy transformer layer." Although the specification refers to an "outer energy and impact transformer layer" and "inner energy and impact transformer layer," the specification does not use the terms "outer energy transformer layer" or "inner energy transformer layer," nor does it explain how energy would be transformed without also transforming the energy of impact on the claimed protective gear or helmet. For this reason, the specification fails to support the full scope of the asserted claims.

Claims 11, 17, and 18 of the ’319 patent are invalid as lacking written description support because the named inventor has not shown possession of the full scope of the recited “protective gear.” Although the term “protective gear” appears in the preamble of the claims, it is limiting because it distinguishes these claims from other claims that specifically recite a “helmet.” The specification does not describe other types of protective gear apart from helmets and does not describe how sliding elements can be used in protective gear other than a helmet. For this reason, the specification fails to support the full scope of claims 11, 17, and 18.

b) The ’561 patent

All asserted claims of the ’561 patent are invalid as lacking written description support because the named inventor has not shown possession of the full scope of the recited “first energy transformer layer” or “second energy transformer layer.” Although the specification refers to an “outer energy and impact transformer layer” and an “inner energy and impact transformer layer,” the specification does not use the terms “outer energy transformer layer” or “inner energy transformer layer,” nor does it explain how energy would be transformed without also transforming the energy of impact on the claimed protective gear or helmet. For this reason, the specification fails to support the full scope of the asserted claims.

Asserted claims 18-20 of the ’561 patent are invalid as lacking written description support because the named inventor has not shown possession of the full scope of the claims. These claims require “first absorptive/dissipative means to allow the first shell layer to slide relative to the second shell layer,” and “second absorptive/dissipative means” between the second shell layer and the third shell layer, but do not require that the second absorptive/dissipative means allow the second shell layer to slide relative to the third shell layer. These claims therefore cover a situation where the first and second shell layers slide relative to each other, but the second and third shell layers do not. The specification does not provide written description support for this. Instead, the specification is silent about this and, with respect to embodiments, refers only to (1) embodiments where there is sliding between both the first and second layers and the second and third layers, or

(2) embodiments where there is no sliding between any layers. For this reason, the specification fails to support the full scope of claims 18-20.

Claim 18 of the ’561 patent is invalid as lacking written description support because the named inventor has not shown possession of the full scope of the recited “protective gear.” Although the term “protective gear” appears in the preamble of the claim, it is limiting because it distinguishes this claim from other claims that specifically recite a “helmet.” The specification does not describe other types of protective gear apart from helmets and does not describe how sliding elements can be used in protective gear other than a helmet. For this reason, the specification fails to support the full scope of claim 18.

c) The ’536 patent

All asserted claims of the ’536 patent are invalid as lacking written description support because the named inventor has not shown possession of the full scope of the recited “first energy transformer” or “second energy transformer.” Although the specification refers to a “outer energy and impact transformer layer,” an “inner energy and impact transformer layer,” and an “energy and impact transformer,” the specification does not use the terms “first energy transformer” or “second energy transformer,” nor does it explain how energy would be transformed without also transforming the energy of impact on the claimed protective gear or helmet. For this reason, the specification fails to support the full scope of the asserted claims.

Asserted claims 18-20 of the ’536 patent are invalid as lacking written description support because the named inventor has not shown possession of the full scope of the claims. These claims require a “first absorptive/dissipative mechanism to allow the first layer to slide relative to the second layer,” and a “second absorptive/dissipative mechanism” between the second layer and the third layer, but do not require that the second absorptive/dissipative mechanism allow the second layer to slide relative to the third layer. These claims therefore cover a situation where the first and second layers slide relative to each other, but the second and third layers do not. However, the specification does not provide written description support for this: Instead, the specification is

silent about this and, with respect to embodiments, refers only to (1) embodiments where there is sliding between both the first and second layers and the second and third layers, or (2) embodiments where there is no sliding between any layers. For this reason, the specification fails to support the full scope of claims 18-20.

Claims 1, 7, 8, 10, 16, and 17 of the ’536 patent are invalid as lacking written description support because the named inventor has not shown possession of the full scope of the recited “protective gear.” Although the term “protective gear” appears in the preamble of the claims, it is limiting because it distinguishes these claims from other claims that specifically recite a “helmet.” The specification does not describe other types of protective gear apart from helmets and does not describe how sliding elements can be used in protective gear other than a helmet. For this reason, the specification fails to support the full scope of claims 1, 7, 8, 10, 16, and 17.

d) <u>The ’635 patent</u>

All asserted claims of the ’635 patent are invalid as lacking written description support because the named inventor has not shown possession of the full scope of a “shear mechanism.” The specification does not use the term “shear mechanism,” and therefore fails to show that the named inventor possessed the concept of a shear mechanism or the full scope of the term. For this reason, the specification fails to support the full scope of the asserted claims.

In addition, because the specification does not use the term “shear mechanism” at all, it also does not describe a “shear mechanism” including any particular component, such as “a first energy transformer” as recited in all asserted claims. Nor does the specification describe a “shear mechanism” with an “energy transformer” that is a different structure than the “shear mechanism.” For this reason, the specification fails to support the full scope of the asserted claims.

All asserted claims of the ’635 patent are invalid as lacking written description support because the named inventor has not shown possession of the full scope of the recited “first energy transformer” or “second energy transformer.” Although the specification refers to an “outer energy and impact transformer layer” and an “inner energy and impact transformer layer,” the

specification does not use the terms "first energy transformer" or "second energy transformer," nor does it explain how energy would be transformed without also transforming the energy of impact on the claimed protective gear or helmet. For this reason, the specification fails to support the full scope of the asserted claims.

All asserted claims of the '635 patent recite a "chin strap." Asserted claims 1-4 of the '635 Patent recite "a chin strap attached to the inner shell layer to maintain the position of the inner shell layer on the human head during rotational force impact while the outer shell layer is allowed to slide." Asserted claims 9-12 and 17-20 of the '635 Patent recite "a chin strap attached to the inner conforming layer to maintain the position of the inner conforming layer on the human head during rotational force impact while the outer shell layer is allowed to slide." To the extent that a "chin strap attached to the inner shell layer" or "inner conforming layer" requires attachment in a way that is not routine in the art, the claims are invalid as lacking written description support because the specification does not provide description for how to attach the chin strap to the inner shell/conforming layer and allow the outer shell layer to slide relative to the inner protective shell/conforming layer. For this reason, the specification fails to support the full scope of the asserted claims.

e) <u>The '909 patent</u>

All asserted claims of the '909 patent are invalid as lacking written description support because the named inventor has not shown possession of the full scope of a "shear mechanism." The specification does not use the term "shear mechanism," and therefore fails to show that the named inventor possessed the concept of a shear mechanism or the full scope of the term. For this reason, the specification fails to support the full scope of the asserted claims.

Asserted claims 5 and 16 of the '635 patent are invalid as lacking written description support because the named inventor has not shown possession of the full scope of a "plurality of elastic bands connecting the outer protective shell from the inner protective shell." The specification does not use the term "elastic bands," and therefore fails to show that the named

inventor possessed the concept of a shear mechanism comprising a plurality of elastic bands connecting the outer protective shell from the inner protective shell or the full scope of the term. For this reason, the specification fails to support the full scope of the asserted claims.

All asserted claims of the '909 patent are invalid as lacking written description support because the named inventor has not shown possession of the full scope of the recited "first energy transformer layer." Although the specification refers to an "energy and impact transformer," an "outer energy and impact transformer layer" and an "inner energy and impact transformer layer," the specification does not use the term "first energy transformer layer," nor does it explain how energy would be transformed without also transforming the energy of impact on the claimed protective gear. For this reason, the specification fails to support the full scope of the asserted claims.

All asserted claims of the '909 patent recite a "chin strap." Asserted claims 1-2, 5, 8-9, and 11 of the '909 Patent recite "a chin strap attached to the inner protective shell, the chin strap and the liner layer configured to secure the inner protective shell to the human head while the outer protective shell is allowed to slide." Asserted claims 12-13, 16 and 19-20 of the '909 Patent recite "a chin strap attached to the inner protective layer, the chin strap and the liner layer configured to secure the inner protective layer to the human head while the outer protective layer is allowed to slide." To the extent that a "chin strap attached to the inner shell layer" or "inner conforming layer" requires attachment in a way that is not routine in the art, the claims are invalid as lacking written description support because the specification does not provide description for how to attach the chin strap to the inner protective shell/layer and allow the outer shell layer to slide relative to the inner protective shell/layer. For this reason, the specification fails to support the full scope of the asserted claims.

2. <u>Lack of Enablement</u>

For the reasons set forth below, the Patents-In-Suit are invalid for lack of enablement as of any possible priority date because the Patents-In-Suit and the applications to which the Patents-In-

Suit claim priority fail to enable a POSITA to be able to make and use the full scope of the asserted claims without undue experimentation under *In re Wands*. For example, the specification provides limited direction of guidance, and many claim elements—including "energy transformer," "energy transformer layer," "shear mechanism," "shear layer"—do not even appear in the specification. The specification does not include any working examples for protective gear beyond helmets and for helmets including the above-referenced claim elements that do not appear in the specification. To the extent the claims cover or are directed to protective gear other than a helmet, those types of protective gear are not explained and it is not clear how the disclosures related to a helmet translate to other protective gear. Additionally, while the vague names for certain claim limitations—including "energy transformer layer," "shear mechanism," "shear layer," "absorptive/dissipative material"—make the scope of the claims unclear, to the extent they seek to encompass ***any*** layer that transforms energy, ***any*** absorptive/dissipative material, etc., then the full scope of the claims is quite broad. The balance of these factors weighs against enablement.

a) The '319 patent

Asserted claims 11 and 17-20 of the '319 patent are invalid as lacking enablement because the specification fails to sufficiently enable a POSITA to make and use the full scope of the recited "outer energy transformer layer" and "inner energy transformer layer" without undue experimentation. Although the specification refers to the "outer energy and impact transformer layer" and "inner energy and impact transformer layer," the specification does not use the terms "outer energy transformer layer" or "inner energy transformer layer" nor does it explain how energy would be transformed without also transforming the energy of impact on the claimed protective gear. For this reason, the specification fails to enable the full scope of the asserted claims.

Claims 11, 17, and 18 of the '319 patent are invalid as lacking enablement because the specification does not teach a POSITA how to make and use the full scope of the recited "protective gear" without undue experimentation. Although the term "protective gear" appears in

the preamble of the claims, it is limiting because it distinguishes these claims from other claims that specifically recite a "helmet." The specification does not describe other types of protective gear apart from helmets and does not describe how sliding elements can be used in protective gear other than a helmet. For this reason, the specification fails to enable the full scope of claims 11, 17, and 18.

b) The '561 patent

Asserted claims 18-20 of the '561 patent are invalid as lacking enablement because the specification fails to enable the full scope of the claims. These claims require "first absorptive/dissipative means to allow the first shell layer to slide relative to the second shell layer," and "second absorptive/dissipative means" between the second shell layer and the third shell layer, but do not require that the second absorptive/dissipative means allow the second shell layer to slide relative to the third shell layer. These claims therefore cover a situation where the first and second shell layers slide relative to each other, but the second and third shell layers do not. However, the specification does not sufficiently enable a POSITA to make and use such an embodiment without undue experimentation. Instead, the specification is silent about this and, with respect to embodiments, refers only to (1) embodiments where there is sliding between both the first and second layers and the second and third layers, or (2) embodiments where there is no sliding between any layers. For this reason, the specification fails to enable the full scope of claims 18-20.

All asserted claims of the '561 patent are invalid as lacking enablement because the specification does not teach a POSITA how to make and use the full scope of the recited "first energy transformer layer" or "second energy transformer layer" without undue experimentation. Although the specification refers to an "outer energy and impact transformer layer" and an "inner energy and impact transformer layer," the specification does not use the terms "outer energy transformer layer" or "inner energy transformer layer" nor does it explain how energy would be

transformed without also transforming the energy of impact on the claimed protective gear. For this reason, the specification fails to enable the full scope of the asserted claims.

Claims 18 of the ’561 patent is invalid as lacking enablement because the specification does not teach a POSITA how to make and use the full scope of the recited “protective gear” without undue experimentation. Although the term “protective gear” appears in the preamble of the claims, it is limiting because it distinguishes these claims from other claims that specifically recite a “helmet.” The specification does not describe other types of protective gear apart from helmets and does not describe how sliding elements can be used in protective gear other than a helmet. For this reason, the specification fails to enable the full scope of claim 18.

c) The ’536 patent

Asserted claims 18-20 of the ’536 patent are invalid as lacking enablement because the specification does not teach a POSITA to make and use the full scope of the claims without undue experimentation. These claims require a “first absorptive/dissipative mechanism to allow the first layer to slide relative to the second layer,” and a “second absorptive/dissipative mechanism” between the second layer and the third layer, but do not require that the second absorptive/dissipative mechanism allow the second layer to slide relative to the third layer. These claims therefore cover a situation where the first and second layers slide relative to each other, but the second and third layers do not. However, the specification does not sufficiently enable a POSITA to make and use such an embodiment without undue experimentation. Instead, the specification is silent about this and, with respect to embodiments, refers only to (1) embodiments where there is sliding between both the first and second layers and the second and third layers, or (2) embodiments where there is no sliding between any layers. For this reason, the specification fails to enable the full scope of claims 18-20.

All asserted claims of the ’536 patent are invalid as lacking enablement because the specification fails to teach a POSITA to make and use the full scope of the recited “first energy transformer” and “second energy transformer” without undue experimentation. Although the

specification refers to an "energy and impact transformer," an "outer energy and impact transformer layer" and an "inner energy and impact transformer layer," the specification does not use the terms "first energy transformer" and "second energy transformer," nor does it explain how energy would be transformed without also transforming the energy of impact on the claimed protective gear or helmet. For this reason, the specification fails to enable the full scope of the asserted claims.

Claims 1, 7, 8, 10, 16, and 17 of the '319 patent are invalid as lacking enablement because the specification does not teach a POSITA how to make and use the full scope of the recited "protective gear" without undue experimentation. Although the term "protective gear" appears in the preamble of the claims, it is limiting because it distinguishes these claims from other claims that specifically recite a "helmet." The specification does not describe other types of protective gear apart from helmets and does not describe how sliding elements can be used in protective gear other than a helmet. For this reason, the specification fails to enable the full scope of claims 1, 7, 8, 10, 16 and 17.

d) The '635 patent

All asserted claims of the '635 patent are invalid as lacking enablement because the specification does not teach a POSITA to make and use the full scope of a "shear mechanism" without undue experimentation. The specification does not use the term "shear mechanism," and therefore fails to explain the concept of a shear mechanism or the full scope of the term. For this reason, the specification fails to enable the full scope of the asserted claims.

In addition, because the specification does not use the term "shear mechanism" at all, it also does not enable a POSITA to make and use the full scope of a "shear mechanism" including any particular component, such as "a first energy transformer" as recited in all asserted claims, without undue experimentation. Indeed, the specification does not describe a "shear mechanism" with an "energy transformer" that is a different structure than the "shear mechanism," let alone

how to make or use them. For this reason, the specification fails to enable the full scope of the asserted claims.

All asserted claims of the ’635 patent are invalid as lacking enablement because the specification fails to teach a POSITA how to make and use the full scope of the recited “first energy transformer” and “second energy transformer” without undue experimentation. Although the specification refers to an “energy and impact transformer,” an “outer energy and impact transformer layer” and an “inner energy and impact transformer layer,” the specification does not use the terms “first energy transformer” or “second energy transformer,” nor does it explain how energy would be transformed without also transforming the energy of impact on the claimed protective gear or helmet. For this reason, the specification fails to enable the full scope of the asserted claims.

All asserted claims of the ’635 patent recite a “chin strap.” Asserted claims 1-4 of the ’635 Patent recite “a chin strap attached to the inner shell layer to maintain the position of the inner shell layer on the human head during rotational force impact while the outer shell layer is allowed to slide.” Asserted claims 9-12 and 17-20 of the ’635 Patent recite “a chin strap attached to the inner conforming layer to maintain the position of the inner conforming layer on the human head during rotational force impact while the outer shell layer is allowed to slide.” To the extent that a “chin strap attached to the inner shell layer” or “inner conforming layer” requires attachment in a way that is not routine in the art, the claims are invalid as enablement because the specification does not teach a POSITA how to attach the chin strap to the inner shell/conforming layer and allow the outer shell layer to slide relative to the inner protective shell/conforming layer and therefore fails to teach a POSITA how to make and used the chin strap without undue experimentation. For this reason, the specification fails to enable the full scope of the asserted claims.

e) <u>The ’909 patent</u>

All asserted claims of the ’909 patent are invalid as lacking enablement because the specification does not teach a POSITA to make and use the full scope of a “shear mechanism”

without undue experimentation. The specification does not use the term "shear mechanism," and therefore fails to explain the concept of a shear mechanism or the full scope of the term. For this reason, the specification fails to enable the full scope of the asserted claims.

Asserted claims 5 and 16 of the '635 patent are invalid as lacking enablement because the specification does not teach a POSITA to make and use the full scope of a "plurality of elastic bands connecting the outer protective shell from the inner protective shell" without undue experimentation. The specification does not use the term "elastic bands," and therefore fails to explain how to make and use a shear mechanism comprising a plurality of elastic bands connecting the outer protective shell from the inner protective shell or the full scope of the term without undue experimentation. For this reason, the specification fails to enable the full scope of the asserted claims.

All asserted claims of the '909 patent are invalid as lacking enablement because the specification does not teach a POSITA to make and use the full scope of the recited "first energy transformer layer." Although the specification refers to an "energy and impact transformer," an "outer energy and impact transformer layer" and an "inner energy and impact transformer layer," the specification does not use the term "first energy transformer layer," nor does it explain how energy would be transformed without also transforming the energy of impact on the claimed protective gear. For this reason, the specification fails to enable the full scope of the asserted claims.

All asserted claims of the '909 patent recite a "chin strap." Asserted claims 1-2, 5, 8-9, and 11 of the '909 Patent recite "a chin strap attached to the inner protective shell, the chin strap and the liner layer configured to secure the inner protective shell to the human head while the outer protective shell is allowed to slide." Asserted claims 12-13, 16 and 19-20 of the '909 Patent recite "a chin strap attached to the inner protective layer, the chin strap and the liner layer configured to secure the inner protective layer to the human head while the outer protective layer is allowed to slide." To the extent that a "chin strap attached to the inner shell layer" or "inner conforming

layer" requires attachment in a way that is not routine in the art, the claims are invalid as lacking enablement because the specification does not teach a POSITA how to attach the chin strap to the inner protective shell/layer and allow the outer shell layer to slide relative to the inner protective shell/ layer. For this reason, the specification fails to enable a POSITA how to make and use the full scope of the asserted claims without undue experimentation.

3. Indefiniteness

a) The '319 patent

All asserted claims of the '319 patent recite "means to allow the outer shell layer to slide relative to the middle shell layer." This is a means-plus-function term which should be construed under 35 U.S.C. § 112, ¶ 6 as follows:

Function: "allowing the outer shell layer to slide relative to the middle shell layer"

Structure: The structures described as performing the recited function at the following passages of the '319 patent:

- Shear truss layer/thin elastomeric truss layer in a comb structure (with or without fluids/gels). '319 patent, 6:25-31, 6:35-37; 8:39-46; 9:15-21.
- Fluids/smart fluids (including electro-rheological or magneto-rheological elements). '319 patent, 6:38-46, 6:56-63, 6:47-55, 6:56-63.
- Conical structures, 3D pyramid or parabolic structures, or cylinders. '319 patent, 9:24-55.
- Dampers. '319 patent, 10:58-60, 10:41-48, *see also id.* 2:28-32.
- Or structural equivalents thereof.

If (1) the term is not construed as a means-plus-function term or (2) the construction of this term does not include all corresponding structure disclosed in the specification, or (3) the construction of this term includes more than the corresponding structure disclosed in the specification and the structural equivalents, it is indefinite because it fails to inform a POSITA with reasonable certainty of the scope of the claim.

All asserted claims of the ’319 patent recite “means to allow the middle shell layer to slide relative to the inner shell layer.” This is a means-plus-function term, which should be construed under 35 U.S.C. § 112, ¶ 6 as follows:

Function: “allowing the middle shell layer to slide relative to the inner shell layer”

Structure: The structures described as performing the recited function at the following passages of the ’319 patent:

- Shear truss layer/thin elastomeric truss layer in a comb structure (with or without fluids/gels). ’319 patent, 6:25-31, 6:35-37; 8:39-46; 9:15-21.
- Fluids/smart fluids (including electro-rheological or magneto-rheological elements). ’319 patent, 6:38-46, 6:56-63, 6:47-55, 6:56-63.
- Conical structures, 3D pyramid or parabolic structures, or cylinders. ’319 patent, 9:24-55.
- Dampers. ’319 patent, 10:58-60, 10:41-48, *see also id.* 2:28-32.
- Or structural equivalents thereof.

If (1) the term is not construed as a means-plus-function term or (2) the construction of this term does not include all corresponding structure disclosed in the specification, or (3) the construction of this term includes more than the corresponding structure disclosed in the specification and the structural equivalents, it is indefinite because it fails to inform a POSITA with reasonable certainty of the scope of the claim.

Asserted claims 11 and 17-20 of the ’319 patent are invalid as indefinite because the specification fails to inform a POSITA with reasonable certainty of the full scope or metes and bounds of the recited “outer energy transformer layer” or “inner energy transformer layer.” Although the specification refers to an “outer energy and impact transformer layer” and an “inner energy and impact transformer layer,” the specification does not use the terms “outer energy transformer layer” or “inner energy transformer layer” nor does it explain how energy would be

transformed without also transforming the energy of impact on the claimed protective gear. For this reason, the asserted claims are indefinite.

Asserted claim 10 of the '319 patent is invalid as indefinite because the term "lining layer" does not have proper antecedent basis. Claim 10 recites "[t]he helmet of claim 6, wherein the lining layer comprises foam." Claim 6, however, does not recite a "lining layer." Because there is no antecedent basis for a "lining layer" by implication and the meaning is not readily ascertainable, claim 10 is indefinite.

b) The '561 patent

Asserted claims 18-20 of the '561 patent recite "first absorptive/dissipative means to allow the first shell layer to slide relative to the second shell layer."

This is a means-plus-function term, which should be construed under 35 U.S.C. § 112, ¶ 6. Although Revelyst does not concede and disagrees that the claim term should be construed to preserve its validity, to the extent it is not found indefinite, the term will only be definite if is construed as follows:

Function: "absorbing and/or dissipating energy and allowing the first shell layer to slide relative to the second shell layer"

Structure: The structures described as performing the recited function at the following passages of the '561 patent:

- Shear truss layer/thin elastomeric truss layer in a comb structure (with or without fluids/gels). '561 patent, 6:31-37, 6:42-44, 8:48-55, 9:24-30.
- Fluids/smart fluids (including electro-rheological or magneto-rheological elements). '561 patent, 6:45-53, 6:63-7:3, 6:54-62.
- Conical structures, 3D pyramid or parabolic structures, or cylinders. '561 patent, 9:33-64.
- Dampers. '561 patent, 11:1-3, 10:51-58; *see also id.*, 2:31-35.
- Or structural equivalents thereof.

If (1) the term is not construed as a means-plus-function term or (2) the construction of this term does not include all corresponding structure disclosed in the specification, or (3) the construction of this term includes more than the corresponding structure disclosed in the specification and the structural equivalents, it is indefinite because it fails to inform a POSITA with reasonable certainty of the scope of the claim.

Asserted claims 18-20 of the '561 patent recite "second absorptive/dissipative means."

This is a means-plus-function term, which should be construed under 35 U.S.C. § 112, ¶ 6. Although Revelyst does not concede and disagrees that the claim term should be construed to preserve its validity, to the extent it is not found indefinite, the term will only be definite if is construed as follows:

Function: "absorbing and/or dissipating energy"

Structure: The structures described as performing the recited function at the following passages of the '561 patent:

- Shear truss layer/thin elastomeric truss layer in a comb structure (with or without fluids/gels). '561 patent, 6:31-37, 6:42-44, 8:48-55, 9:24-30.
- Fluids/smart fluids (including electro-rheological or magneto-rheological elements). '561 patent, 6:45-53, 6:63-7:3, 6:54-62.
- Conical structures, 3D pyramid or parabolic structures, or cylinders. '561 patent, 9:33-64.
- Dampers. '561 patent, 11:1-3, 10:51-58; *see also id.*, 2:31-35.
- Foams/memory foam. '561 patent, 7:4-7, 8:56-60.
- Accordions with a fluid or gel or a compressed fluid/piston/spring with a piston/cylinder and a compressed fluid between. '561 patent, 7:25-35.
- Or structural equivalents thereof.

If (1) the term is not construed as a means-plus-function term or (2) the construction of this term does not include all corresponding structure disclosed in the specification, or (3) the

construction of this term includes more than the corresponding structure disclosed in the specification and the structural equivalents, it is indefinite because it fails to inform a POSITA with reasonable certainty of the scope of the claim.

All asserted claims of the '561 patent are invalid as indefinite because the specification fails to inform a POSITA with reasonable certainty of the scope of the recited "first energy transformer layer" or "second energy transformer layer." Although the specification refers to an "outer energy and impact transformer layer" and an "inner energy and impact transformer layer," the specification does not use the terms "outer energy transformer layer" or "inner energy transformer layer" nor does it explain how energy would be transformed without also transforming the energy of impact on the claimed protective gear. For this reason, the asserted claims are indefinite.

c) The '536 patent

All asserted claims of the '536 patent are invalid as indefinite because the specification does not inform a POSITA with reasonable certainty of the scope of the recited "first energy transformer" or "second energy transformer." Although the specification refers to an "energy and impact transformer," an "outer energy and impact transformer layer" and an "inner energy and impact transformer layer," the specification does not use the terms "first energy transformer" or "second energy transformer," nor does it explain how energy would be transformed without also transforming the energy of impact on the claimed protective gear or helmet. For this reason, asserted claims of the '536 patent are indefinite.

Asserted claims 18-20 of the '536 patent are invalid as indefinite because the specification fails to inform a POSITA with reasonable certainty of the scope of the "first absorptive/dissipative mechanism to allow the first layer to slide relative to the second layer," and "second absorptive/dissipative mechanism" between the second layer and the third layer. The specification does not use the term "absorptive/dissipative mechanism" and provides no guidance as to the scope or breadth of the claim term. Indeed, even BrainGuard's Infringement Contentions apply these

claim terms inconsistently and to different features of helmets and fail to indicate even BrainGuard's view of the scope of these terms. For this reason, claims 18-20 are indefinite.

d) The '635 patent

All asserted claims of the '635 patent are invalid as indefinite because the specification does not inform a POSITA with reasonable certainty of the scope of the claimed "shear mechanism." The specification does not use the term "shear mechanism," and provides no guidance as to the scope or breadth of the claim term. Indeed, even BrainGuard's Infringement Contentions apply this term inconsistently and to different features of helmets and fail to indicate even BrainGuard's view of the scope of this term, including because these contentions do not identify a shear mechanism for asserted independent claims. For this reason, the asserted claims are indefinite.

All asserted claims of the '635 patent recite a "shear mechanism … wherein the shear mechanism includes a first energy transformer." The claims are further indefinite because a POSITA would not have understood with reasonable certainty the scope of the claimed "shear mechanism" with an included "first energy transformer." The specification of the '635 patent does not mention a "shear mechanism" let alone one with a "first energy transformer" or provide guidance to a POSITA what is within and outside the metes and bounds of the claims. Indeed, even BrainGuard's Infringement Contentions apply this term inconsistently and to different features of helmets and fail to indicate even BrainGuard's view of the scope of this term. For this reason, the specification fails to inform a POSITA with reasonable certainty of the scope of the asserted claims.

Asserted claims 2-4, 10-12, and 18-20 of the '635 patent recite "the shear mechanism is a shear layer." Claims 2-4, 10-12, and 18-20 are indefinite because the specification does not use the term "shear layer" and provides no guidance as to the scope or breadth of the claim term. Indeed, even BrainGuard's Infringement Contentions fail to indicate BrainGuard's view of the scope of this term. For example, the Infringement Contentions point to a structure for the shear

mechanism … wherein the shear mechanism includes a first energy transformer," but then point to a different structure for the dependent claims that recite a shear layer. For this reason, the specification fails to inform a POSITA with reasonable certainty of the scope of these claims.

All asserted claims of the '635 patent are invalid as indefinite because the specification fails to inform a POSITA with reasonable certainty of the scope of the recited "first energy transformer" and "second energy transformer." Although the specification refers to an "energy and impact transformer," an "outer energy and impact transformer layer" and an "inner energy and impact transformer layer," the specification does not use the terms "first energy transformer" or "second energy transformer," nor does it explain how energy would be transformed without also transforming the energy of impact on the claimed protective gear or helmet. For this reason, the asserted claims are indefinite.

Claim 3 of the '635 patent recites a "shear layer is connected to the outer shell layer through the first energy transformer." To the extent BrainGuard contends this limitation requires a physical connection or a proximal connection, claim 3 is invalid as indefinite. Claim 1, from which claim 3 depends, already requires "an inner shell layer connected to the outer shell layer through a shear mechanism." And claim 2, from which claim 3 further depends, recites "the shear mechanism is a shear layer." The specification does not explain how the outer shell layer can be both (1) connected to a shear mechanism/layer ***through*** a first energy transformer and (2) connected to the shear mechanism/layer, unless the connection is indirect. Thus, to the extent BrainGuard contends that such limitation requires a physical connection or a proximal connection, the specification fails to inform a POSITA with reasonable of the scope of the term "shear layer is connected to the outer shell layer through the first energy transformer."

e) <u>The '909 patent</u>

All asserted claims of the '909 patent are invalid as indefinite because the specification does not inform a POSITA with reasonable certainty of the scope of the claimed "shear mechanism." The specification does not use the term "shear mechanism," and provides no

guidance as to the scope or breadth of the claim term. Indeed, even BrainGuard's Infringement Contentions fail to indicate BrainGuard's view of the scope of this term, as they do not identify a shear mechanism for the independent claims. For this reason, the asserted claims are indefinite.

Claims 9 and 20 of the '909 patent recite "wherein the shear mechanism is a shear layer." Claims 9 and 20 are indefinite because the specification does not use the term "shear layer" and provides no guidance as to the scope or breadth of the claim term. Indeed, even BrainGuard's Infringement Contentions fail to indicate BrainGuard's view of the scope of this term. For example, the Infringement Contentions point to a structure for the shear mechanism … wherein the shear mechanism includes a first energy transformer," but then point to a different structure for the dependent claims that recite a shear layer. For this reason, the specification fails to inform a POSITA with reasonable certainty of the scope of these claims.

All asserted claims of the '909 patent are invalid as indefinite because the specification fails to inform a POSITA with reasonable certainty of the full scope of the recited "first energy transformer layer." Although the specification refers to an "outer energy and impact transformer layer" and an "inner energy and impact transformer layer," the specification does not use the term "first energy transformer layer," nor does it explain how energy would be transformed without also transforming the energy of impact on the claimed protective gear. For this reason, the asserted claims are indefinite.

Asserted claim 11 recites "The helmet of claim 1, further comprising a middle protective shell disposed between the outer protective shell and the inner protective shell." Claim 1 recites "a first energy transformer layer associated with a shear mechanism, the first energy transformer layer residing between the outer protective shell and the inner protective shell, wherein the shear mechanism allows the outer protective shell to slide relative to the inner protective shell." To the extent the "middle shell layer" is part of the "shear mechanism" or "first energy transformer," the specification fails to inform a POSITA with reasonable certainty of the scope of claim 11 because

claim 11 requires another, further structure in addition to the structures recited in claim 1. For this reason claim 11 is indefinite.

VII. INEQUITABLE CONDUCT

Revelyst also incorporates by reference the allegations in its inequitable conduct defense and counter-claims as set forth in its Answer to BrainGuard's Second Amended Complaint, No. 8:24-cv-2652, Dkt. 35.

DATED: June 24, 2025

Respectfully submitted,

By: /s/ Madeleine Laupheimer

Amy K. Wigmore, *pro hac vice*
amy.wigmore@wilmerhale.com
Joshua L. Stern, *pro hac vice*
joshua.stern@wilmerhale.com
WILMER CUTLER PICKERING
HALE & DORR LLP
2100 Pennsylvania Avenue NW
Washington, DC 20037
Tel.: (202) 663-6000

James M. Dowd, SBN 259578
james.dowd@wilmerhale.com
Vikram P. Iyer, SBN 318324
vikram.iyer@wilmerhale.com
WILMER CUTLER PICKERING
HALE & DORR LLP
350 South Grand Avenue, Suite 2400
Los Angeles, CA 90071
Tel.: (213) 443-5300

Madeleine C. Laupheimer, *pro hac vice*
madeleine.laupheimer@wilmerhale.com
WILMER CUTLER PICKERING
HALE & DORR LLP
60 State Street
Boston, MA 02109
Tel.: (617) 526-6000

Attorneys for Defendants
Revelyst Sales LLC and Mips AB

PROOF OF SERVICE

I am a citizen of the United States of America and am employed in Boston, MA. I am over the age of 18 and am not a party to this action.

On June 24, 2025, I caused the foregoing **DEFENDANT'S INVALIDITY CONTENTIONS** to be served on Plaintiff BrainGuard Technologies, Inc. through its counsel via the following email service list: brainguard-revelyst@foliolaw.com.

I certify and declare under penalty of perjury under the laws of the United States of America that the foregoing is true and correct, and that this declaration was executed on June 24, 2025, in Boston, MA.

/s/ Madeleine Laupheimer
Madeleine Laupheimer