US012037004B2

(12) **United States Patent**
Gordon et al.

(10) **Patent No.: US 12,037,004 B2**
(45) **Date of Patent: Jul. 16, 2024**

(54) **CONTROLLING DRIVING MODES OF SELF-DRIVING VEHICLES**

(71) Applicant: **GRANITE VEHICLE VENTURES LLC**, Carrollton, TX (US)

(72) Inventors: **Michael S. Gordon**, Yorktown Heights, NY (US); **James R. Kozloski**, New Fairfield, CT (US); **Ashish Kundu**, New York, NY (US); **Peter K. Malkin**, Ardsley, NY (US); **Clifford A. Pickover**, Yorktown Heights, NY (US)

(73) Assignee: **Granite Vehicle Ventures LLC**, Carrollton, TX (US)

(*) Notice: Subject to any disclaimer, the term of this patent is extended or adjusted under 35 U.S.C. 154(b) by 0 days.

(21) Appl. No.: **18/222,774**

(22) Filed: **Jul. 17, 2023**

(65) **Prior Publication Data**

US 2023/0356735 A1 Nov. 9, 2023

Related U.S. Application Data

(63) Continuation of application No. 17/374,656, filed on Jul. 13, 2021, now Pat. No. 11,738,765, which is a

(Continued)

(51) **Int. Cl.**
B60W 50/12 (2012.01)
B60W 40/06 (2012.01)

(Continued)

(52) **U.S. Cl.**
CPC ***B60W 50/12*** (2013.01); ***B60W 40/06*** (2013.01); ***B60W 40/08*** (2013.01); ***B60W 40/10*** (2013.01);

(Continued)

(58) **Field of Classification Search**
None
See application file for complete search history.

(56) **References Cited**

U.S. PATENT DOCUMENTS

4,665,395 A 5/1987 Van
4,908,988 A 3/1990 Yamamura et al.

(Continued)

FOREIGN PATENT DOCUMENTS

CA 2392578 A1 5/2001
CA 2392652 A1 5/2001

(Continued)

OTHER PUBLICATIONS

Model S Software Update 6.2.

(Continued)

Primary Examiner — Todd Melton
(74) *Attorney, Agent, or Firm* — Kinney & Lange, P. A.

(57) **ABSTRACT**

A computer-implemented method, system, and/or computer program product controls a driving mode of a self-driving vehicle (SDV). One or more processors compare a control processor competence level of an on-board SDV control processor in controlling the SDV to a human driver competence level of a human driver in controlling the SDV while the SDV encounters a current roadway condition which is a result of current weather conditions of the roadway on which the SDV is currently traveling. One or more processors then selectively assign control of the SDV to the SDV control processor or to the human driver while the SDV encounters the current roadway condition based on which of the control processor competence level and the human driver competence level is relatively higher to one another.

39 Claims, 8 Drawing Sheets

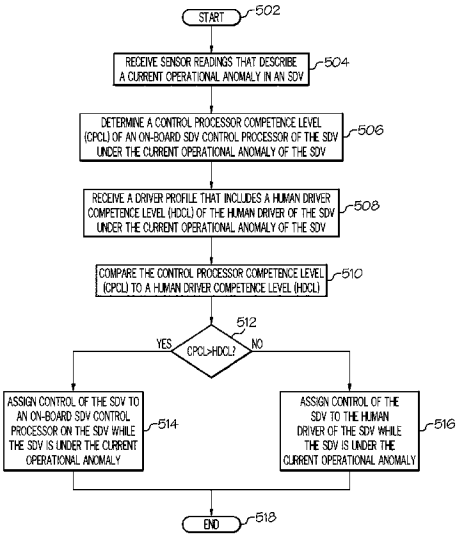

Related U.S. Application Data

continuation of application No. 16/997,202, filed on Aug. 19, 2020, now Pat. No. 11,091,171, which is a continuation of application No. 16/899,407, filed on Jun. 11, 2020, now abandoned, and a continuation of application No. 15/955,874, filed on Apr. 18, 2018, now Pat. No. 10,717,446, which is a continuation of application No. 15/341,225, filed on Nov. 2, 2016, now Pat. No. 10,029,701, which is a continuation of application No. 14/865,393, filed on Sep. 25, 2015, now Pat. No. 9,566,986.

(51) **Int. Cl.**

B60W 40/08	(2012.01)
B60W 40/10	(2012.01)
B60W 50/00	(2006.01)
B60W 60/00	(2020.01)
G05D 1/00	(2024.01)
B62D 1/28	(2006.01)
B62D 6/00	(2006.01)

(52) **U.S. Cl.**

CPC ***B60W 50/0098*** (2013.01); ***B60W 60/0059*** (2020.02); ***G05D 1/0061*** (2013.01); *B60W 2040/0809* (2013.01); *B60W 2050/0072* (2013.01); *B60W 2050/0095* (2013.01); *B60W 2510/30* (2013.01); *B60W 2540/22* (2013.01); *B60W 2552/00* (2020.02); *B60W 2555/20* (2020.02); *B60W 2556/10* (2020.02); *B60W 2756/10* (2020.02); *B62D 1/286* (2013.01); *B62D 6/007* (2013.01)

(56) **References Cited**

U.S. PATENT DOCUMENTS

5,975,791	A	11/1999	McCulloch
6,064,970	A	5/2000	McMillan et al.
6,201,318	B1	3/2001	Guillory
6,326,903	B1	12/2001	Gross et al.
6,393,362	B1	5/2002	Burns
6,502,035	B2	12/2002	Levine
6,587,043	B1	7/2003	Kramer
6,622,082	B1	9/2003	Schmidt et al.
6,704,621	B1	3/2004	Stein et al.
6,731,202	B1	5/2004	Klaus
6,810,312	B2	10/2004	Jammu et al.
7,113,867	B1	9/2006	Stein
7,124,088	B2	10/2006	Bauer et al.
7,151,996	B2	12/2006	Stein
7,580,782	B2	8/2009	Breed et al.
7,769,544	B2	8/2010	Blesener et al.
7,877,269	B2	1/2011	Bauer et al.
7,894,951	B2	2/2011	Norris et al.
7,979,173	B2	7/2011	Breed
8,031,062	B2	10/2011	Smith
8,045,455	B1	10/2011	Agronow et al.
8,078,349	B1	12/2011	Prada et al.
8,090,598	B2	1/2012	Bauer et al.
8,139,109	B2	3/2012	Schmiedel et al.
8,140,358	B1	3/2012	Ling et al.
8,146,703	B2	4/2012	Baumann et al.
8,152,325	B2	4/2012	McDermott
8,180,322	B2	5/2012	Nakae et al.
8,346,480	B2	1/2013	Trepagnier et al.
8,352,112	B2	1/2013	Mudalige
8,442,854	B2	5/2013	Lawton et al.
8,466,807	B2	6/2013	Mudalige
8,489,434	B1	7/2013	Otis et al.
8,509,982	B2	8/2013	Montemerlo et al.
8,583,365	B2	11/2013	Jang et al.
8,660,734	B2	2/2014	Zhu et al.
8,676,466	B2	3/2014	Mudalige
8,678,701	B1	3/2014	Aldasem
8,786,461	B1	7/2014	Daudelin
8,793,046	B2	7/2014	Lombrozo et al.
8,810,392	B1	8/2014	Teller et al.
8,816,857	B2	8/2014	Nordin et al.
8,825,258	B2	9/2014	Cullinane et al.
8,849,494	B1	9/2014	Herbach et al.
8,874,305	B2	10/2014	Dolgov et al.
8,880,270	B1	11/2014	Ferguson et al.
8,903,591	B1	12/2014	Ferguson et al.
8,923,890	B1	12/2014	White et al.
8,924,150	B2	12/2014	Tsimhoni et al.
8,948,955	B2	2/2015	Zhu et al.
8,949,016	B1	2/2015	Ferguson et al.
8,954,217	B1	2/2015	Montemerlo et al.
8,954,252	B1	2/2015	Urmson et al.
8,954,261	B2	2/2015	Das et al.
8,958,943	B2	2/2015	Bertosa et al.
8,965,621	B1	2/2015	Urmson et al.
8,970,362	B2	3/2015	Morley et al.
8,983,705	B2	3/2015	Zhu et al.
8,996,224	B1	3/2015	Herbach et al.
9,014,905	B1	4/2015	Kretzschmar et al.
9,020,697	B2	4/2015	Ricci et al.
9,024,787	B2	5/2015	Alshinnawi et al.
9,082,239	B2	7/2015	Ricci
9,090,260	B2	7/2015	Clarke et al.
9,120,484	B1	9/2015	Ferguson et al.
9,123,049	B2	9/2015	Hyde et al.
9,145,116	B2	9/2015	Clarke et al.
9,150,220	B2	10/2015	Clarke et al.
9,156,473	B2	10/2015	Clarke et al.
9,170,327	B2	10/2015	Choe et al.
9,189,897	B1	11/2015	Stenneth
9,194,168	B1	11/2015	Lu et al.
9,195,895	B1	11/2015	Kapach et al.
9,205,835	B2	12/2015	Stein et al.
9,207,323	B2	12/2015	Zhu et al.
9,216,745	B2	12/2015	Beardsley et al.
9,218,698	B2	12/2015	Ricci
9,233,688	B2	1/2016	Clarke et al.
9,248,832	B2	2/2016	Huberman
9,272,709	B2	3/2016	Ben Shalom
9,286,520	B1	3/2016	Lo et al.
9,297,641	B2	3/2016	Stein
9,305,411	B2	4/2016	Ricci
9,317,033	B2	4/2016	Ibanez-Guzman et al.
9,342,074	B2	5/2016	Dolgov et al.
9,365,213	B2	6/2016	Stenneth et al.
9,365,214	B2	6/2016	Ben Shalom et al.
9,381,915	B1	7/2016	Crombez et al.
9,390,451	B1	7/2016	Slusar
9,393,998	B2	7/2016	Clarke et al.
9,399,472	B2	7/2016	Minoiu-Enache
9,415,777	B2	8/2016	Clarke et al.
9,443,163	B2	9/2016	Springer
9,446,765	B2	9/2016	Ben Shalom et al.
9,452,754	B2	9/2016	Clarke et al.
9,454,152	B2 *	9/2016	Kopetz B60W 50/10
9,463,805	B2	10/2016	Kirsch et al.
9,483,948	B1	11/2016	Gordon et al.
9,552,735	B2	1/2017	Pilutti et al.
9,566,958	B2	2/2017	Waldmann
9,566,986	B1	2/2017	Gordon et al.
9,628,975	B1	4/2017	Watkins et al.
9,646,496	B1	5/2017	Miller
9,650,025	B2	5/2017	Dagan
9,650,058	B2 *	5/2017	Schiek B60W 60/0053
9,656,673	B2	5/2017	Clarke et al.
9,664,789	B2	5/2017	Rosenblum et al.
9,671,243	B2	6/2017	Stein
9,676,389	B2	6/2017	Clarke et al.
9,718,468	B2	8/2017	Barfield et al.
9,834,224	B2	12/2017	Gordon et al.
9,881,427	B2	1/2018	Barajas Gonzalez et al.
10,101,742	B2 *	10/2018	Prokhorov B60W 40/02
10,150,473	B2	12/2018	Aharony et al.
10,173,673	B1	1/2019	Ferguson et al.
10,293,826	B2	5/2019	Clarke et al.

(56) **References Cited**

U.S. PATENT DOCUMENTS

10,317,231	B2	6/2019	Ferencz et al.
10,318,823	B2	6/2019	Shashua et al.
10,449,957	B2	10/2019	Nagy et al.
10,572,744	B2	2/2020	Shashua et al.
2002/0026841	A1	3/2002	Svendsen
2002/0128774	A1	9/2002	Takezaki et al.
2003/0040864	A1	2/2003	Stein
2003/0065572	A1	4/2003	McNee et al.
2003/0076981	A1	4/2003	Smith et al.
2004/0078133	A1	4/2004	Miller et al.
2004/0117086	A1	6/2004	Rao et al.
2004/0199306	A1	10/2004	Heilmann et al.
2005/0021227	A1	1/2005	Matsumoto et al.
2005/0104745	A1	5/2005	Bachelder et al.
2006/0106671	A1	5/2006	Biet
2006/0163939	A1	7/2006	Kuramochi et al.
2006/0200379	A1	9/2006	Biet
2006/0241855	A1	10/2006	Joe et al.
2007/0100687	A1	5/2007	Yoshikawa
2007/0124027	A1	5/2007	Betzitza et al.
2008/0048850	A1	2/2008	Yamada
2008/0065293	A1	3/2008	Placke et al.
2008/0114663	A1	5/2008	Watkins et al.
2008/0129475	A1	6/2008	Breed et al.
2008/0201217	A1	8/2008	Bader et al.
2008/0288406	A1	11/2008	Seguin et al.
2009/0094109	A1	4/2009	Aaronson et al.
2009/0114663	A1	5/2009	Alvares et al.
2009/0138168	A1	5/2009	Labuhn et al.
2009/0248231	A1	10/2009	Kamiya
2009/0313096	A1	12/2009	Kaga
2010/0057511	A1	3/2010	Mansouri et al.
2010/0156672	A1	6/2010	Yoo et al.
2010/0179720	A1	7/2010	Lin et al.
2010/0228427	A1	9/2010	Anderson et al.
2010/0256852	A1	10/2010	Mudalige
2011/0029173	A1	2/2011	Hyde et al.
2011/0035250	A1	2/2011	Finucan
2011/0077807	A1	3/2011	Hyde et al.
2011/0077808	A1	3/2011	Hyde et al.
2011/0137699	A1	6/2011	Ben-Ari et al.
2011/0264521	A1	10/2011	Straka
2012/0072243	A1	3/2012	Collins et al.
2012/0139756	A1	6/2012	Djurkovic
2012/0277947	A1	11/2012	Boehringer et al.
2012/0293341	A1	11/2012	Lin
2013/0030657	A1	1/2013	Chatterjee et al.
2013/0113634	A1	5/2013	Hutchinson et al.
2013/0131949	A1	5/2013	Shida
2013/0144502	A1	6/2013	Shida
2013/0147957	A1	6/2013	Stein
2013/0231824	A1	9/2013	Wilson et al.
2013/0261871	A1	10/2013	Hobbs et al.
2014/0019259	A1	1/2014	Dung et al.
2014/0032049	A1	1/2014	Moshchuk et al.
2014/0092332	A1	4/2014	Price
2014/0095214	A1	4/2014	Mathe et al.
2014/0129073	A1	5/2014	Ferguson
2014/0136045	A1	5/2014	Zhu et al.
2014/0136414	A1	5/2014	Abhyanker
2014/0164126	A1	6/2014	Nicholas et al.
2014/0188999	A1	7/2014	Leonard et al.
2014/0195213	A1	7/2014	Kozloski et al.
2014/0201037	A1	7/2014	Mallawarachchi et al.
2014/0201126	A1	7/2014	Zadeh et al.
2014/0214255	A1	7/2014	Dolgov et al.
2014/0214260	A1	7/2014	Eckert et al.
2014/0222277	A1	8/2014	Tsimhoni et al.
2014/0222577	A1	8/2014	Abhyanker
2014/0282967	A1	9/2014	Maguire et al.
2014/0297116	A1	10/2014	Anderson et al.
2014/0306833	A1	10/2014	Ricci
2014/0309789	A1	10/2014	Ricci
2014/0309806	A1	10/2014	Ricci
2014/0309864	A1	10/2014	Ricci
2014/0309891	A1	10/2014	Ricci
2014/0310186	A1	10/2014	Ricci
2014/0316671	A1	10/2014	Okamoto
2014/0324268	A1	10/2014	Montemerlo et al.
2014/0330479	A1	11/2014	Dolgov et al.
2014/0358331	A1	12/2014	Prada Gomez et al.
2014/0358353	A1	12/2014	Ibanez-Guzman et al.
2015/0006005	A1	1/2015	Yu et al.
2015/0006014	A1	1/2015	Wimmer et al.
2015/0026092	A1	1/2015	Abboud et al.
2015/0035685	A1	2/2015	Strickland et al.
2015/0051778	A1	2/2015	Mueller
2015/0057891	A1	2/2015	Mudalige et al.
2015/0062340	A1	3/2015	Datta et al.
2015/0062469	A1	3/2015	Fleury
2015/0066282	A1	3/2015	Yopp
2015/0066284	A1	3/2015	Yopp
2015/0070178	A1	3/2015	Kline
2015/0088358	A1	3/2015	Yopp
2015/0095190	A1	4/2015	Hammad et al.
2015/0103159	A1	4/2015	Shashua et al.
2015/0120331	A1	4/2015	Russo et al.
2015/0134178	A1	5/2015	Minoiu-Enache
2015/0137985	A1	5/2015	Zafiroglu et al.
2015/0141043	A1	5/2015	Abramson et al.
2015/0149018	A1	5/2015	Attard et al.
2015/0149021	A1	5/2015	Duncan et al.
2015/0151725	A1	6/2015	Clarke et al.
2015/0151742	A1	6/2015	Clarke et al.
2015/0151751	A1	6/2015	Clarke et al.
2015/0151753	A1	6/2015	Clarke et al.
2015/0153735	A1	6/2015	Clarke et al.
2015/0160019	A1	6/2015	Biswal et al.
2015/0166059	A1	6/2015	Ko
2015/0175070	A1	6/2015	Attard et al.
2015/0178998	A1	6/2015	Attard et al.
2015/0196256	A1	7/2015	Venkatraman et al.
2015/0210274	A1	7/2015	Clarke et al.
2015/0210275	A1	7/2015	Huberman
2015/0210276	A1	7/2015	Ben Shalom et al.
2015/0210277	A1	7/2015	Ben Shalom
2015/0210278	A1	7/2015	Ben Shalom et al.
2015/0210280	A1	7/2015	Agnew et al.
2015/0210312	A1	7/2015	Stein et al.
2015/0232065	A1	8/2015	Ricci et al.
2015/0234045	A1	8/2015	Rosenblum et al.
2015/0242953	A1	8/2015	Suiter
2015/0293994	A1	10/2015	Kelly
2015/0332104	A1	11/2015	Kapach et al.
2015/0332114	A1	11/2015	Springer
2015/0336547	A1	11/2015	Dagan
2015/0338226	A1	11/2015	Mason et al.
2015/0339639	A1	11/2015	Choe
2015/0354976	A1	12/2015	Ferencz et al.
2015/0367850	A1	12/2015	Clarke et al.
2016/0001781	A1	1/2016	Fung et al.
2016/0026182	A1	1/2016	Boroditsky et al.
2016/0046290	A1	2/2016	Aharony et al.
2016/0052514	A1	2/2016	Clarke et al.
2016/0063761	A1	3/2016	Sisbot et al.
2016/0075512	A1	3/2016	Lert
2016/0078695	A1	3/2016	McClintic et al.
2016/0078758	A1	3/2016	Basalamah
2016/0090100	A1	3/2016	Oyama et al.
2016/0139594	A1	5/2016	Okumura et al.
2016/0140507	A1	5/2016	Stevens et al.
2016/0167650	A1	6/2016	Clarke et al.
2016/0176409	A1	6/2016	Kirsch et al.
2016/0202700	A1	7/2016	Sprigg
2016/0205146	A1	7/2016	Sugioka et al.
2016/0229410	A1	8/2016	Clarke et al.
2016/0303969	A1	10/2016	Akula
2016/0304122	A1	10/2016	Herzog et al.
2016/0334797	A1	11/2016	Ross et al.
2016/0344737	A1	11/2016	Anton et al.
2016/0347322	A1	12/2016	Clarke et al.
2016/0355192	A1	12/2016	James et al.
2016/0358477	A1	12/2016	Ansari
2016/0364823	A1	12/2016	Cao

(56) **References Cited**

U.S. PATENT DOCUMENTS

2017/0001650	A1	1/2017	Park
2017/0010613	A1	1/2017	Fukumoto
2017/0021837	A1	1/2017	Ebina
2017/0057542	A1	3/2017	Kim et al.
2017/0088143	A1	3/2017	Goldman-Shenhar et al.
2017/0098131	A1	4/2017	Shashua et al.
2017/0106876	A1	4/2017	Gordon et al.
2017/0123428	A1	5/2017	Levinson et al.
2017/0129487	A1	5/2017	Wulf
2017/0137023	A1	5/2017	Anderson et al.
2017/0151958	A1	6/2017	Sakuma
2017/0168689	A1	6/2017	Goldman-Shenhar et al.
2017/0200449	A1	7/2017	Penilla et al.
2017/0248949	A1	8/2017	Moran et al.
2018/0075309	A1	3/2018	Sathyanarayana et al.
2018/0093631	A1	4/2018	Lee et al.

FOREIGN PATENT DOCUMENTS

CN	1135063	A	11/1996
CN	2349068	Y	11/1999
CN	201004265	Y	1/2008
CN	202012052	U	10/2011
CN	202038228	U	11/2011
CN	102650882	A	8/2012
CN	202772924	U	3/2013
CN	104900018	A	9/2015
CN	106030609	A	10/2016
CN	106462727	A	2/2017
CN	107111742	A	8/2017
CN	110920609	A	3/2020
CN	111027420	A	4/2020
EP	0582236	B1	6/1998
EP	1236126	A1	9/2002
EP	1257971	A2	11/2002
EP	1257971	A4	7/2005
EP	1727089	A2	11/2006
EP	1727089	A3	9/2007
EP	1622072	B1	7/2010
EP	2605185	A2	6/2013
EP	2605185	A3	7/2014
EP	3092599	A1	11/2016
EP	3100206	A1	12/2016
EP	3108264	A2	12/2016
EP	3143607	A1	3/2017
EP	3146506	A2	3/2017
EP	3152704	A2	4/2017
EP	3154835	A1	4/2017
EP	3183688	A1	6/2017
EP	3092599	B1	3/2019
EP	3514032	A1	7/2019
EP	3146506	B1	12/2019
EP	3640890	A1	4/2020
EP	3680818	A1	7/2020
WO	2014058263	A1	4/2014
WO	2014066721	A2	5/2014
WO	2014066721	A3	5/2014
WO	2014066721	A3	6/2014
WO	2014147361	A1	9/2014
WO	2014148975	A1	9/2014
WO	2014148976	A1	9/2014
WO	2015024616	A1	2/2015
WO	2015056105	A1	4/2015
WO	2015083009	A1	6/2015
WO	2015125022	A2	8/2015
WO	2015156146	A1	10/2015
WO	2015125022	A3	11/2015
WO	2015186002	A2	12/2015
WO	2015189847	A1	12/2015
WO	2016027270	A1	2/2016
WO	2015186002	A3	3/2016

OTHER PUBLICATIONS

Tesla Model "S" Manual and Overview, 2015.

Abkowitz, A. , "Do Self-Driving Cars Spell Doom for Auto Insurers?", A. Abkowitz, "Do Self-Driving Cars Spell Doom for Auto Insurers?," Bloomberg L.P., Sep. 10, 2014, pp. 1-2, Sep. 2014.

Anonymous , Avoiding Crashes With Self-Driving Cars: Today's Crash-Avoidance Systems are The Mile Markers to Tomorrow's Autonomous Vehicles. Consumer Reports Magazine, Feb. 2014www.consumerreports.org/cro/magazine/2014/04/the-road-to-self-driving-cars/index.htm.

Anonymous , "Car Built in Mechanism to Enforce Mandatory Self-Driving Mode", Anonymous, "Car Built-In Mechanism to Enforce Mandatory Self-Driving Mode", ip.com, No. 000234916, Feb. 14 2014, pp. 1-3., Feb. 2014.

Anonymous , "Diagnostics Mechanism for Self-Driving Cars to Validate Self-Driving Capabilities", Anonymous, "Diagnostics Mechanism for Self-Driving Cars to Validate Self-Driving Capabilities", IP.com, Jun. 6, 2014, pp. 1-5 IP.com, Jun. 2014.

Anonymous , "Google Files Patent for Second-Gen Autonomous Vehicle Without a Steering Wheel, Brake Pedal & More", Anonymous, "Google Files Patent for Second-Gen Autonomous Vehicle Without a Steering Wheel, Brake Pedal & More". patentlymobile.com, Nov. 27, 2015. Web. Sep. 22, 2016., Nov. 2015.

Anonymous , "Self-Driving Cars and Insurance", Anonymous, "Self-Driving Cars and Insurance," Insurance Information Institute, Inc., Feb. 2015, pp. 1-3.

Anonymous , "System and Method to Target Advertisement for the Right Focus Group", Anonymous, 'System and Method to Target Advertisements for the Right Focus Group. ip.com, No. 000218285, May 31, 2012, pp. 1-2., May 2012.

Berger, C , et al., "Cots-Architecture With a Real-Time OS for a Self-Driving Miniature Vehicle", C. Berger et al., "Cots-Architecture With a Real-Time OS for a Self-Driving Miniature Vehicle", Safecomp 2013—Workshop Ascoms of The 32nd International Conference on Computer Safety, Reliability and Security, Sep. 2013, Toulouse, France, pp. 1-13., Sep. 2013.

Brownell , "Shared Autonomous Taxi Networks: An Analysis of Transportation Demand in NJ and a 21st Century Solution for Congestion", Brownell, "Shared Autonomous Taxi Networks: An Analysis of Transportation Demand in NJ and a 21st Century Solution for Congestion", Dissertation, Princeton University, 2013, pp. 1-122.

Chen, S , et al., "A Crash Risk Assessment Model for Roas Curves", Chen S, et al., A Crash Risk Assessment Model for Roas Curves. In Proceedings 20th International Technical Conference on the Enhanced Saftey of Vehicles., 2007. Lyon, France.

Crothers, Brooke , "Google Now Reporting Self-Driving Car Accidents: HER, it's Not the Car's Fault", Crothers, Brooke. "Google Now Reporting Self-Driving Car Accidents: Her, It's Not the Car's Fault". forbes.com, Jun. 8, 2015. http://www.forbes.com/sites/brookecrothers/2015/06/08/google-now-reportibg-driveless-car-accidents/, Jun. 2015.

Farrier , "Airlines Infuse Their Planes With Smells to Calm You Down", Farrier, "Airlines Infuse Their Planes With Smells to Calm You Down", Neatorama, neatorama.com, Mar. 29, 2015, 1 page, Mar. 2015.

Fox, M , "Self-driving cars safer than those drive by humans: Bob Lutz", M. Fox, "Self-driving cars safer than those drive by humans: Bob Lutz," CNBC, www.cnbc.com, Sep. 8, 2014, 1 page., Sep. 2014.

Gomes, Lee , "Google's Self-Driving Cars Still Face Many Obstacles/ MIT Technology Review", Gomes, Lee. "Google's Self-Driving Cars Still Face Many Obstacles/ MIT Technology Review" MIT Technology Review. Aug. 28, 2014. Web www.technolgyreview.co/news/530276/hidden-obstacles-for-googles-self-driving-cars, Aug. 2014.

Hars, A , "Self-Driving Cars: The Digital Transformation of Mobility", A. Hars, "Self-Driving Cars: The Digital Transformation of Mobility", Marktplatze Im Umbruch, Springer Berlin Heidelberg, 2015, pp. 539-549.

Horberry, T , et al., "Driver Distraction: The Effects of Concurrent In-Vehicle Tasks, Road Environment Complexity and Age on Driving Performance", T. Horberry et al. "Driver Distraction: The Effects of Concurrent In-Vehicle Tasks, Road Environment Com

(56) **References Cited**

OTHER PUBLICATIONS

plexity and Age on Driving Performance," Elsevier LTD., Accident analysis and prevention, 38, 2006, pp. 185-191.
Jardin, X. , "Terrifying dashcam video captures distracted teen derivers crashing while goofing off", X. Jardin, "Terrifying dashcam video captures distracted teen drivers crashing while goofing off," Boing Boing, www.boingboing.net, Mar. 26, 2015, 1 page, Mar. 2015.
Jimenez , et al., "Autonomous collision avoidance system based on accurate knowledge of the vehicle surroundings", Jimenez et al. "Autonomous collision avoidance system based on accurate knowledge of the vehicle surroundings" Inst Engineering Technology—IET; IET Intelligent Transport Systems vol. 9, No. 1, pp. 105-117; 2015, England.
Lawler, R , "Riding shotgun in Tesla's fastest car ever", Lawler, R. "Riding shotgun in Tesla's fastest car ever," Engadget, Oct. 9, 2018., Oct. 2018.
Lehrer, E , "The Insurance Implications of Google's Self-Driving Car", E. Lehrer, "The Insurance Implications of Google's Self-Driving Car", Insurance Journal, Right Street Blog, May 28, 2014, pp. 1-2, May 2014.
Lutin , et al., "The Revolutionary Development of Self-Driving Vehicles and Implications for the Transportation Engineering Profession", Lutin et al., "The Revolutionary Development of Self-Driving Vehicles and Implications for The Transportation Engineering Profession", ITE Journal 83.7, 2013, pp. 28-32.
Mell, P , et al., "The Nist Definition of Cloud Computing", P. Mell et al., "The Nist Definition of Cloud Computing," National Institute of Standards and Technology, Information Technology Laboratory, Sep. 2011, pp. 1-7, Sep. 2011.
Miller, J , "Self-Driving Car Technologu's Benefits, Potential Risks, and Solutions", J. Miller, "Self-Driving Car Technologu's Benefits, Potential Risks, and Solutions", the Energy Collective, theenergycollective.com, Aug. 19, 2014, pp. 1-7., Aug. 2014.
Nelson, G , "Tesla beams down 'autopilot' mode to Model S", Nelson, G.: "Tesla beams down 'autopilot' mode to Model S," Automotive News, Oct. 14, 2015., Oct. 2015.
O'Callaghan , "Inside The Mercedes Self-Guidubg Car That's Built for Luxurious Living In, Not Driving", O'Callaghan, "Inside the Mercedes Self-Guidubg Car That's Built for Luxurious Living in, Not Driving", Associated Newspapers Ltd., Daily Mail, dailymail.com.uk, Jan. 6, 2015, pp. 1-13., Jan. 2015.
Sessa , et al., "Blueprint of Alternative City Cyber-Mobility Take-U Scenarios", Sessa et al., "Blueprint of Alternative City Cyber-Mobility Take-U Scenarios", Seventh Framework Programme Theme SST.2012.3.1-4, Automated Urban Vehicles Collaborative Project—Grant Agreement No. 314190, 2013, pp. 1-63.
Smith, Mark , "Innovations: Emerging Trends in the Wheelchair Market", Smith, Mark. "Inovations: Emerging Trends in The Wheelchair Market." New Mobility Magazine, Aug. 1, 2014. Web. http://www.newmobility.com/2014/08/emerging-trends/, Aug. 2014.
Vanderbilt, T , "Let The Robot Drive: The Autonomous Car of The Future is Here", T. Vanderbilt, "Let The Robot Drive: The Autonomous Car of The Future is Here", Wired Magazine, Conde Nast, www.wired.com, Jan. 20, 2012. pp. 1-34., Jan. 2012.
Wei , et al., "Towards a Viable Autonomous Driving Research Platform", Wei et al., "Towards a Viable Autonomous Driving Research Platform", IEEE, Intelegent Vehicles Symposium (IV), 2013, pp. 1-8.

* cited by examiner

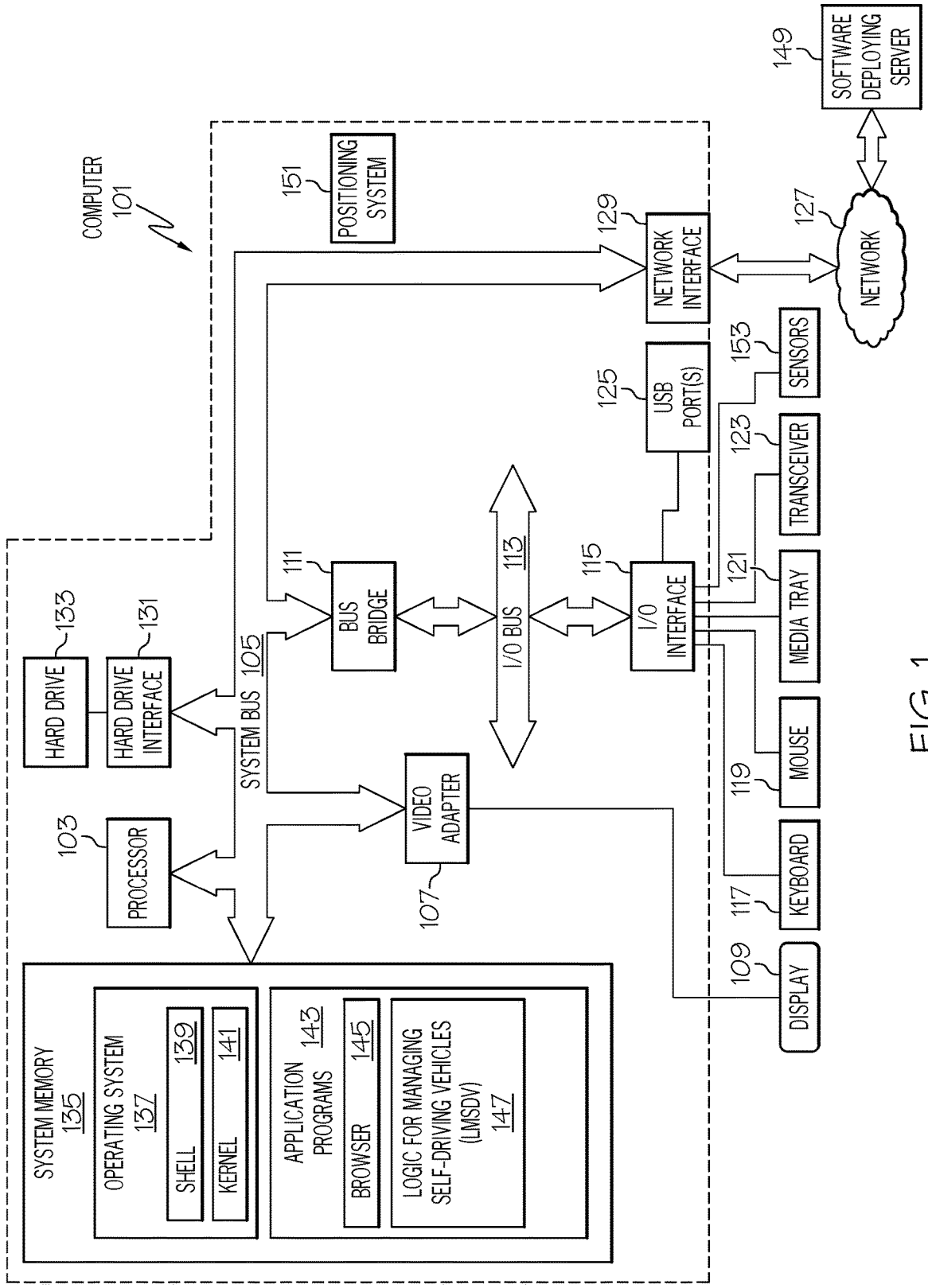
COMPUTER 101
SOFTWARE DEPLOYING SERVER 149
POSITIONING SYSTEM 151
NETWORK INTERFACE 129
NETWORK 127
SENSORS 153
USB PORT(S) 125
TRANSCEIVER 123
MEDIA TRAY 121
MOUSE 119
KEYBOARD 117
DISPLAY 109
BUS BRIDGE 111
I/O BUS 113
I/O INTERFACE 115
HARD DRIVE 133
HARD DRIVE INTERFACE 131
SYSTEM BUS 105
PROCESSOR 103
VIDEO ADAPTER 107
SYSTEM MEMORY 135
OPERATING SYSTEM 137
SHELL 139
KERNEL 141
APPLICATION PROGRAMS 143
BROWSER 145
LOGIC FOR MANAGING SELF-DRIVING VEHICLES (LMSDV) 147

FIG. 1

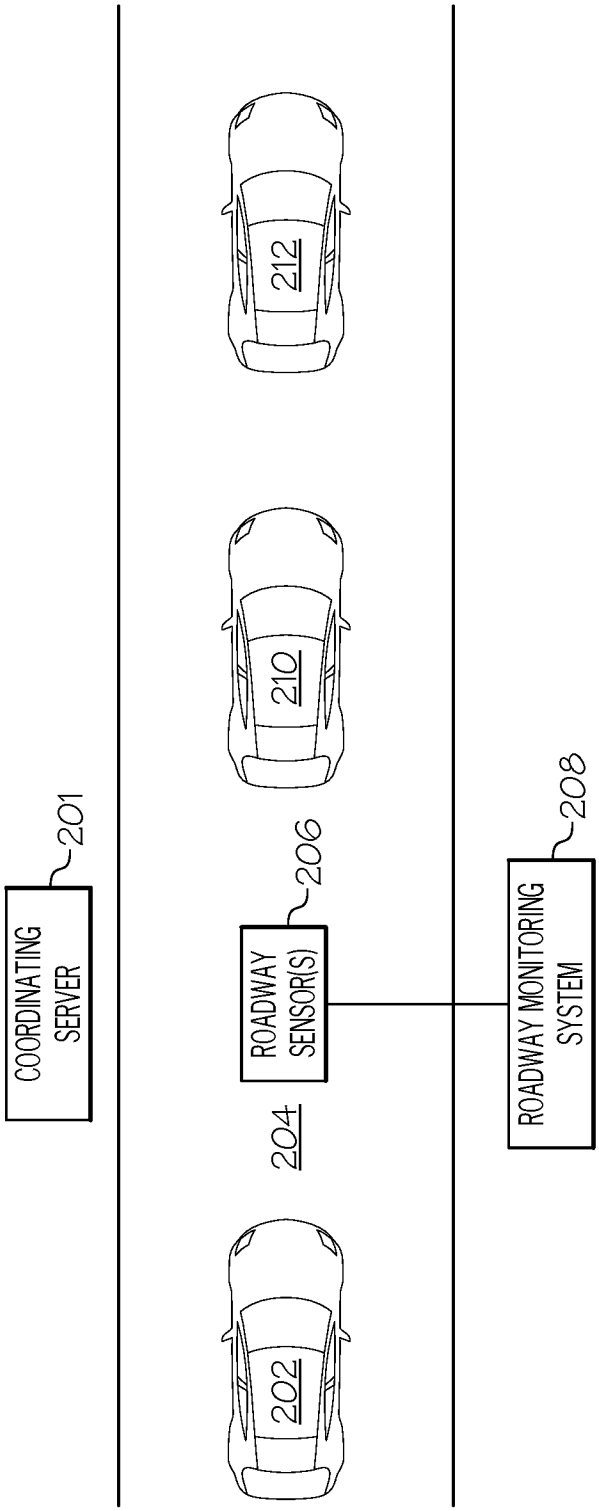
COORDINATING SERVER
201
ROADWAY SENSOR(S)
206
204
ROADWAY MONITORING SYSTEM
208
202
210
212

FIG. 2

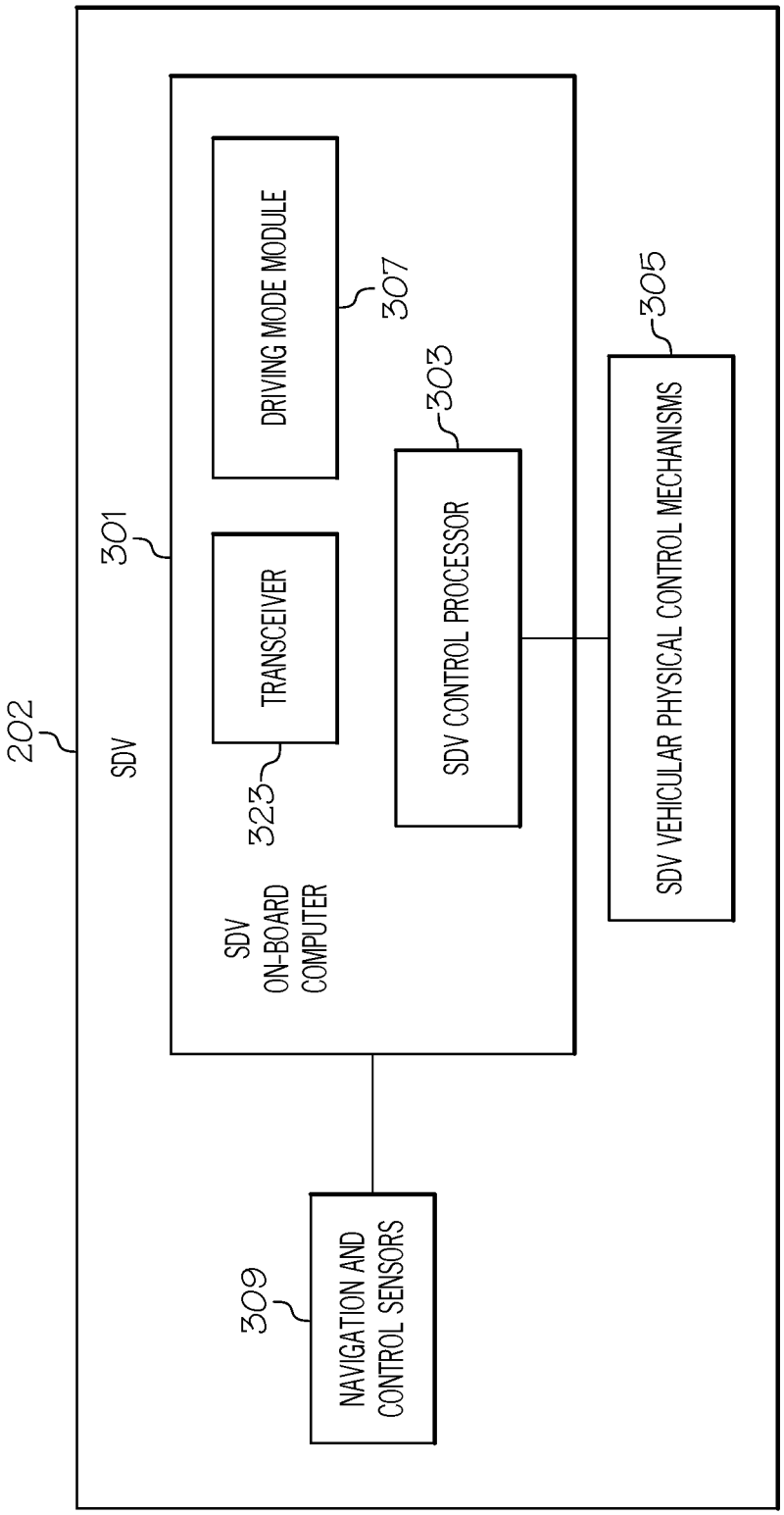
202
SDV
301
SDV
ON-BOARD
COMPUTER
TRANSCEIVER
323
DRIVING MODE MODULE
307
SDV CONTROL PROCESSOR
303
SDV VEHICULAR PHYSICAL CONTROL MECHANISMS
305
NAVIGATION AND
CONTROL SENSORS
309

FIG. 3

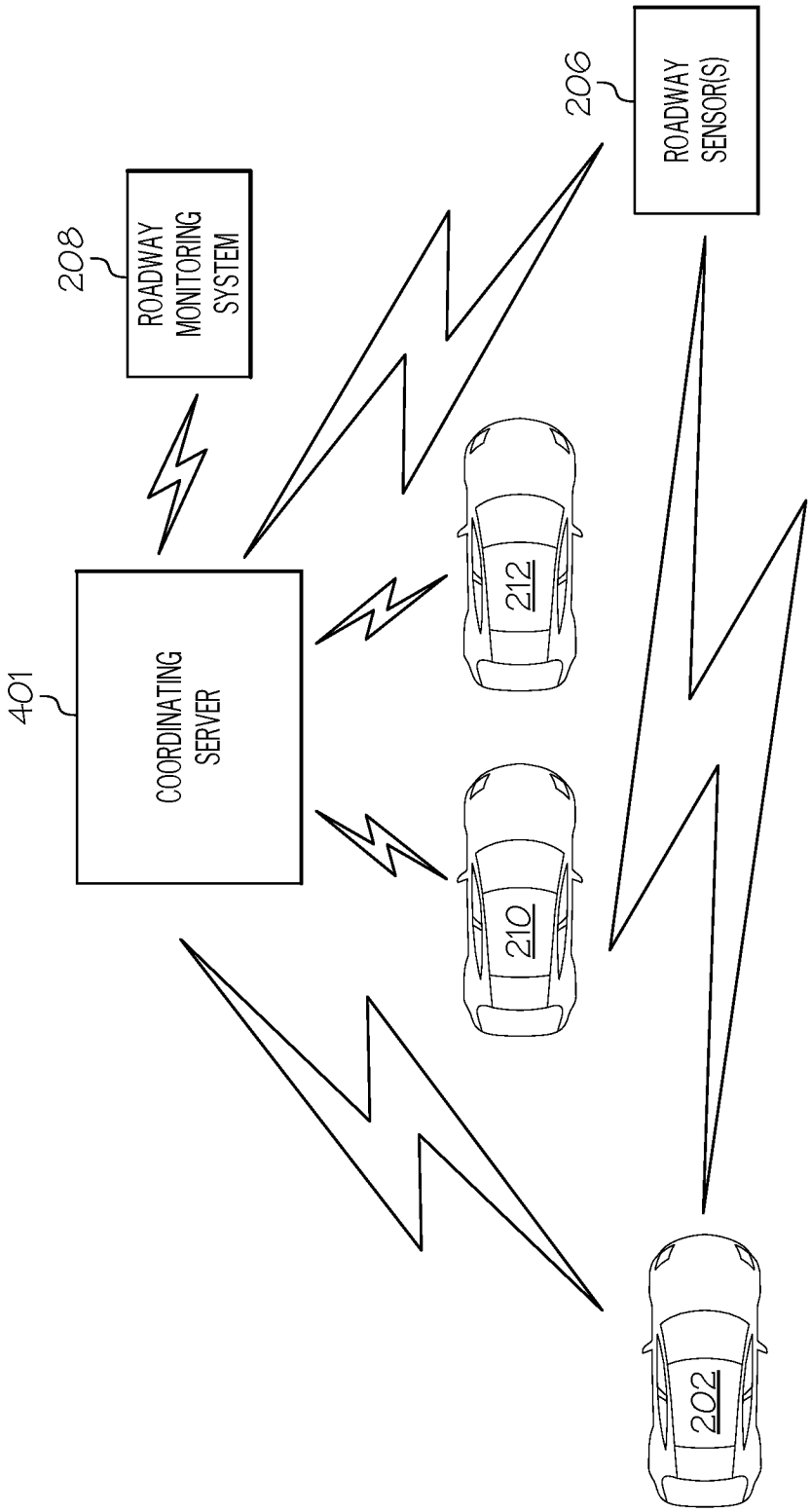
401
COORDINATING SERVER
208
ROADWAY MONITORING SYSTEM
206
ROADWAY SENSOR(S)
212
210
202

FIG. 4

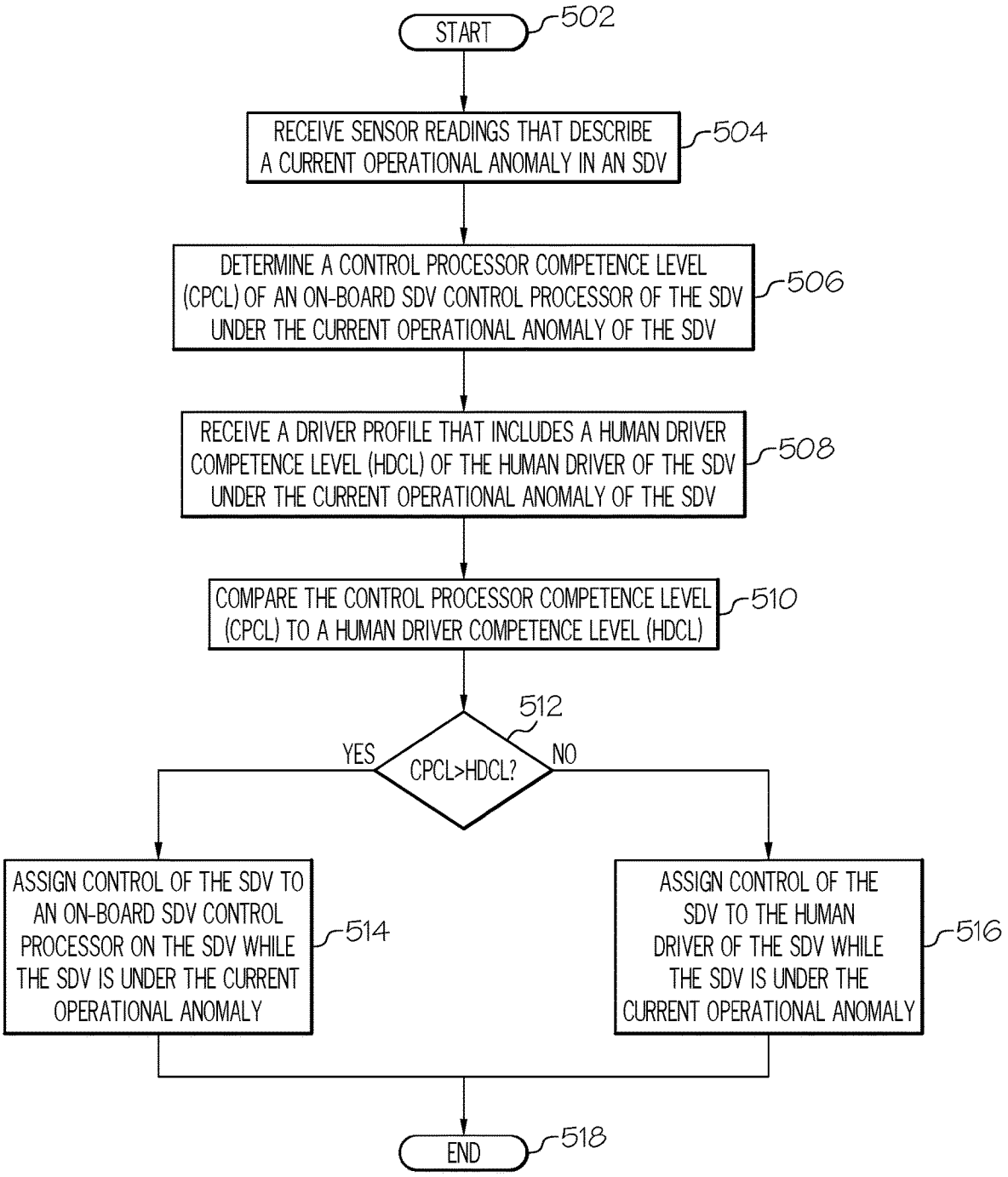
START
502
RECEIVE SENSOR READINGS THAT DESCRIBE A CURRENT OPERATIONAL ANOMALY IN AN SDV
504
DETERMINE A CONTROL PROCESSOR COMPETENCE LEVEL (CPCL) OF AN ON-BOARD SDV CONTROL PROCESSOR OF THE SDV UNDER THE CURRENT OPERATIONAL ANOMALY OF THE SDV
506
RECEIVE A DRIVER PROFILE THAT INCLUDES A HUMAN DRIVER COMPETENCE LEVEL (HDCL) OF THE HUMAN DRIVER OF THE SDV UNDER THE CURRENT OPERATIONAL ANOMALY OF THE SDV
508
COMPARE THE CONTROL PROCESSOR COMPETENCE LEVEL (CPCL) TO A HUMAN DRIVER COMPETENCE LEVEL (HDCL)
510
512
CPCL>HDCL?
YES
NO
ASSIGN CONTROL OF THE SDV TO AN ON-BOARD SDV CONTROL PROCESSOR ON THE SDV WHILE THE SDV IS UNDER THE CURRENT OPERATIONAL ANOMALY
514
ASSIGN CONTROL OF THE SDV TO THE HUMAN DRIVER OF THE SDV WHILE THE SDV IS UNDER THE CURRENT OPERATIONAL ANOMALY
516
END
518

FIG. 5

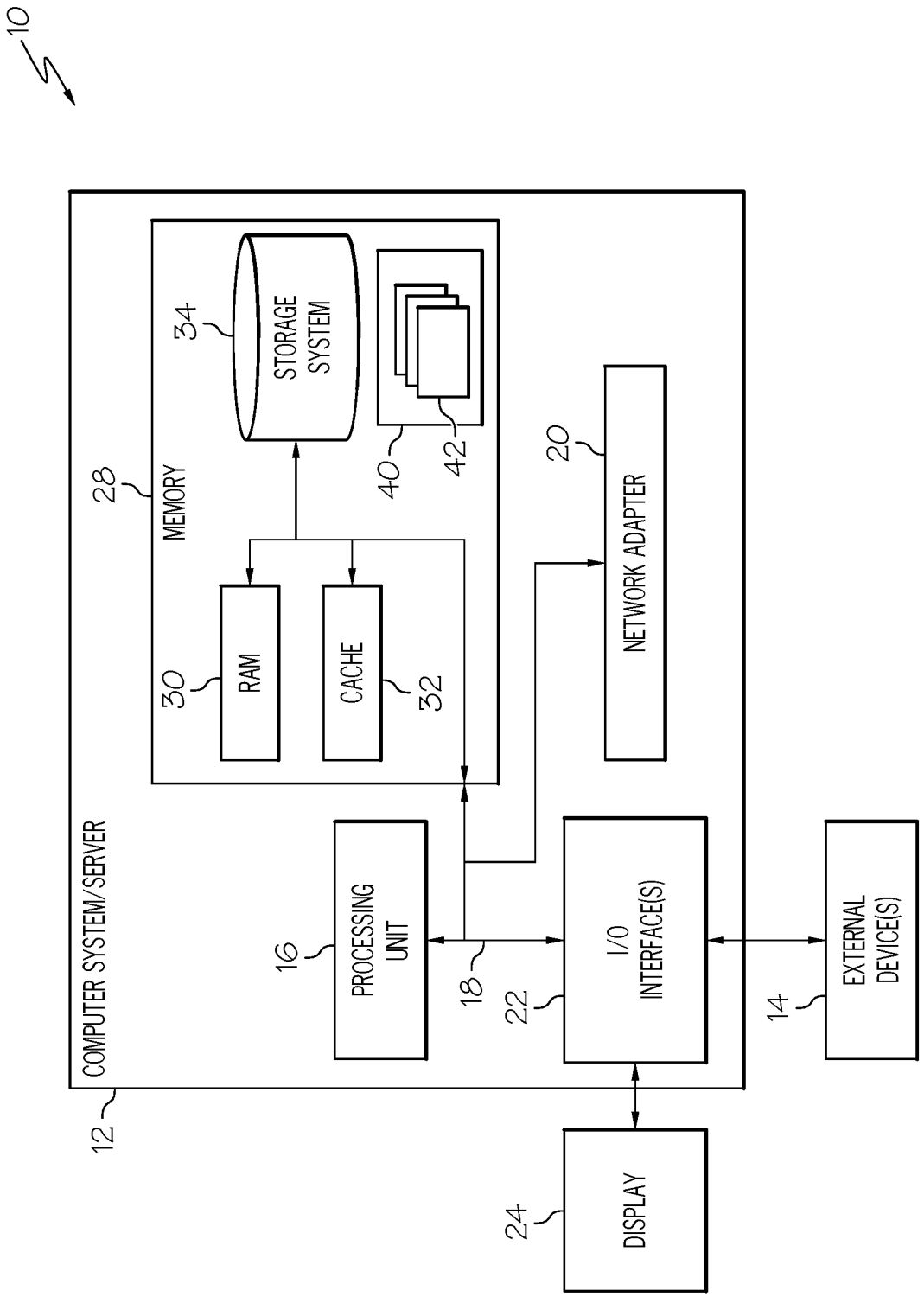
10
COMPUTER SYSTEM/SERVER
12
MEMORY
28
STORAGE SYSTEM
34
RAM
30
CACHE
32
40
42
PROCESSING UNIT
16
18
NETWORK ADAPTER
20
I/O INTERFACE(S)
22
EXTERNAL DEVICE(S)
14
DISPLAY
24

FIG. 6

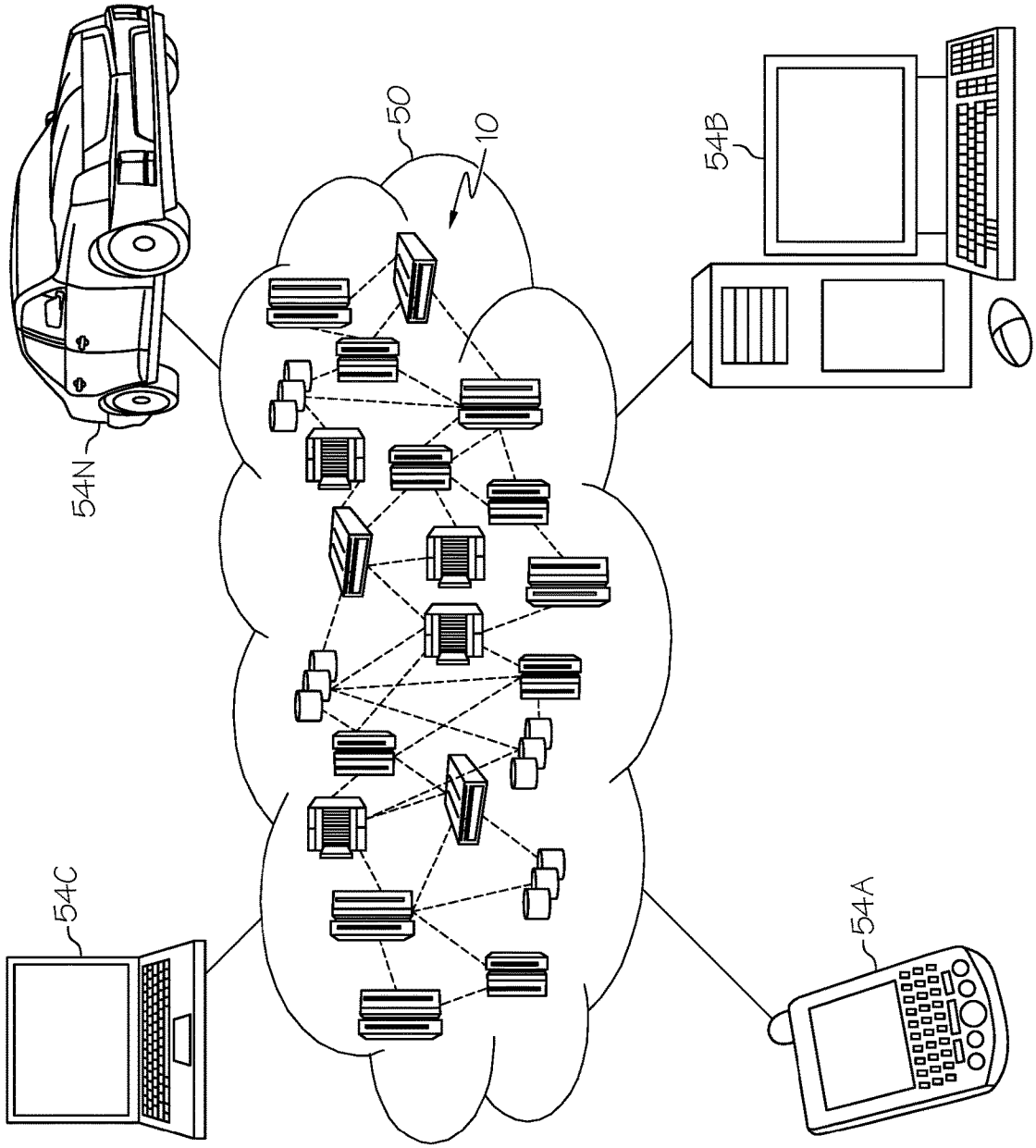

FIG. 7

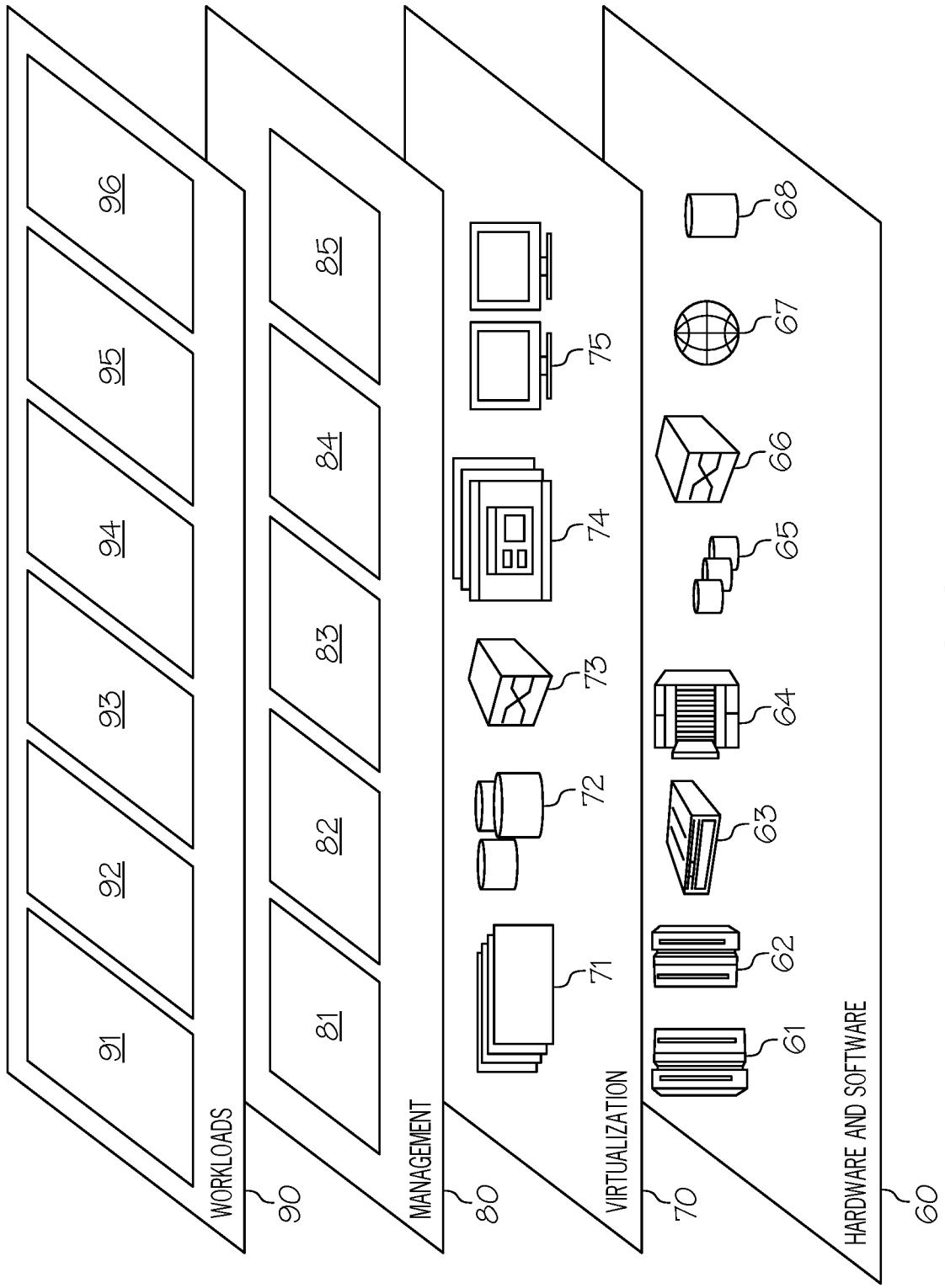
WORKLOADS
90
91
92
93
94
95
96
MANAGEMENT
80
81
82
83
84
85
VIRTUALIZATION
70
71
72
73
74
75
HARDWARE AND SOFTWARE
60
61
62
63
64
65
66
67
68

FIG. 8

CONTROLLING DRIVING MODES OF SELF-DRIVING VEHICLES

CROSS-REFERENCE TO RELATED APPLICATIONS

This application is a continuation of U.S. application Ser. No. 17/374,656 filed Jul. 13, 2021, which in turn claims the benefit of continuation of U.S. application Ser. No. 16/997,202, filed Aug. 19, 2020, U.S. Pat. No. 11,091,171 on Aug. 17, 2021, which is a continuation of Ser. No. 16/899,407 filed Jun. 11, 2020, which is a continuation of U.S. application Ser. No. 15/955,874, Filed Apr. 18, 2018, U.S. Pat. No. 10,717,446, on Jul. 21, 2020, which is a continuation of U.S. application Ser. No. 15/341,225 filed Nov. 2, 2016, U.S. Pat. No. 10,029,701 on Jul. 24, 2018, which is a continuation of U.S. application Ser. No. 14/865,393 filed on Sep. 25, 2015 U.S. Pat. No. 9,566,986 on Feb. 14, 2017, are hereby incorporated by reference in their entirety.

BACKGROUND

The present disclosure relates to the field of vehicles, and specifically to the field of self-driving vehicles. Still more specifically, the present disclosure relates to the field of controlling whether self-driving vehicles operate in autonomous mode or manual mode.

Self-driving vehicles (SDVs) are vehicles that are able to autonomously drive themselves through private and/or public spaces. Using a system of sensors that detect the location and/or surroundings of the SDV, logic within or associated with the SDV controls the speed, propulsion, braking, and steering of the SDV based on the sensor-detected location and surroundings of the SDV.

SUMMARY

A computer-implemented method, system, and/or computer program product controls a driving mode of a self-driving vehicle (SDV). One or more processors determine a control processor competence level of a self-driving vehicle (SDV) control processor. The control processor competence level describes a competence level of the SDV control processor in controlling the SDV while the SDV experiences the current operational anomaly. One or more processors receive a driver profile of the human driver of the SDV. The driver profile describes a human driver competence level of the human driver in controlling the SDV while the SDV experiences the current operational anomaly. One or more processors compare the control processor competence level to the human driver competence level. One or more processors then selectively assign control of the SDV to the SDV control processor or to the human driver while the SDV experiences the current operational anomaly based on which of the control processor competence level and the human driver competence level is relatively higher to one another.

BRIEF DESCRIPTION OF THE DRAWINGS

FIG. **1** depicts an exemplary system and network in which the present disclosure may be implemented;

FIG. **2** illustrates an exemplary self-driving vehicle (SDV) traveling on a roadway in accordance with one or more embodiments of the present invention;

FIG. **3** depicts additional detail of control hardware within an SDV;

FIG. **4** depicts communication linkages among SDVs, roadway sensor(s), a roadway monitoring system, and/or a coordinating server;

FIG. **5** is a high-level flow chart of one or more steps performed by one or more processors to control a driving mode of an SDV in accordance with one or more embodiments of the present invention;

FIG. **6** depicts a cloud computing node according to an embodiment of the present disclosure;

FIG. **7** depicts a cloud computing environment according to an embodiment of the present disclosure; and

FIG. **8** depicts abstraction model layers according to an embodiment of the present disclosure.

DETAILED DESCRIPTION

The present invention may be a system, a method, and/or a computer program product. The computer program product may include a computer readable storage medium (or media) having computer readable program instructions thereon for causing a processor to carry out aspects of the present invention.

The computer readable storage medium can be a tangible device that can retain and store instructions for use by an instruction execution device. The computer readable storage medium may be, for example, but is not limited to, an electronic storage device, a magnetic storage device, an optical storage device, an electromagnetic storage device, a semiconductor storage device, or any suitable combination of the foregoing. A non-exhaustive list of more specific examples of the computer readable storage medium includes the following: a portable computer diskette, a hard disk, a random access memory (RAM), a read-only memory (ROM), an erasable programmable read-only memory (EPROM or Flash memory), a static random access memory (SRAM), a portable compact disc read-only memory (CD-ROM), a digital versatile disk (DVD), a memory stick, a floppy disk, a mechanically encoded device such as punch-cards or raised structures in a groove having instructions recorded thereon, and any suitable combination of the foregoing. A computer readable storage medium, as used herein, is not to be construed as being transitory signals per se, such as radio waves or other freely propagating electromagnetic waves, electromagnetic waves propagating through a waveguide or other transmission media (e.g., light pulses passing through a fiber-optic cable), or electrical signals transmitted through a wire.

Computer readable program instructions described herein can be downloaded to respective computing/processing devices from a computer readable storage medium or to an external computer or external storage device via a network, for example, the Internet, a local area network, a wide area network and/or a wireless network. The network may comprise copper transmission cables, optical transmission fibers, wireless transmission, routers, firewalls, switches, gateway computers and/or edge servers. A network adapter card or network interface in each computing/processing device receives computer readable program instructions from the network and forwards the computer readable program instructions for storage in a computer readable storage medium within the respective computing/processing device.

Computer readable program instructions for carrying out operations of the present invention may be assembler instructions, instruction-set-architecture (ISA) instructions, machine instructions, machine dependent instructions, microcode, firmware instructions, state-setting data, or either source code or object code written in any combination

of one or more programming languages, including an object oriented programming language such as Java, Smalltalk, C++ or the like, and conventional procedural programming languages, such as the "C" programming language or similar programming languages. The computer readable program instructions may execute entirely on the user's computer, partly on the user's computer, as a stand-alone software package, partly on the user's computer and partly on a remote computer or entirely on the remote computer or server. In the latter scenario, the remote computer may be connected to the user's computer through any type of network, including a local area network (LAN) or a wide area network (WAN), or the connection may be made to an external computer (for example, through the Internet using an Internet Service Provider). In some embodiments, electronic circuitry including, for example, programmable logic circuitry, field-programmable gate arrays (FPGA), or programmable logic arrays (PLA) may execute the computer readable program instructions by utilizing state information of the computer readable program instructions to personalize the electronic circuitry, in order to perform aspects of the present invention.

Aspects of the present invention are described herein with reference to flowchart illustrations and/or block diagrams of methods, apparatus (systems), and computer program products according to embodiments of the invention. It will be understood that each block of the flowchart illustrations and/or block diagrams, and combinations of blocks in the flowchart illustrations and/or block diagrams, can be implemented by computer readable program instructions.

These computer readable program instructions may be provided to a processor of a general purpose computer, special purpose computer, or other programmable data processing apparatus to produce a machine, such that the instructions, which execute via the processor of the computer or other programmable data processing apparatus, create means for implementing the functions/acts specified in the flowchart and/or block diagram block or blocks. These computer readable program instructions may also be stored in a computer readable storage medium that can direct a computer, a programmable data processing apparatus, and/or other devices to function in a particular manner, such that the computer readable storage medium having instructions stored therein comprises an article of manufacture including instructions which implement aspects of the function/act specified in the flowchart and/or block diagram block or blocks.

The computer readable program instructions may also be loaded onto a computer, other programmable data processing apparatus, or other device to cause a series of operational steps to be performed on the computer, other programmable apparatus or other device to produce a computer implemented process, such that the instructions which execute on the computer, other programmable apparatus, or other device implement the functions/acts specified in the flowchart and/or block diagram block or blocks.

The flowchart and block diagrams in the Figures illustrate the architecture, functionality, and operation of possible implementations of systems, methods, and computer program products according to various embodiments of the present invention. In this regard, each block in the flowchart or block diagrams may represent a module, segment, or portion of instructions, which comprises one or more executable instructions for implementing the specified logical function(s). In some alternative implementations, the functions noted in the block may occur out of the order noted in the figures. For example, two blocks shown in succession may, in fact, be executed substantially concurrently, or the blocks may sometimes be executed in the reverse order, depending upon the functionality involved. It will also be noted that each block of the block diagrams and/or flowchart illustration, and combinations of blocks in the block diagrams and/or flowchart illustration, can be implemented by special purpose hardware-based systems that perform the specified functions or acts or carry out combinations of special purpose hardware and computer instructions.

With reference now to the figures, and in particular to FIG. **1**, there is depicted a block diagram of an exemplary system and network that may be utilized by and/or in the implementation of the present invention. Some or all of the exemplary architecture, including both depicted hardware and software, shown for and within computer **101** may be utilized by software deploying server **149** shown in FIG. **1**, and/or coordinating server **201** and/or roadway monitoring system **208** shown in FIG. **2**, and/or a self-driving vehicle (SDV) on-board computer **301** shown in FIG. **3**, and/or a coordinating server **401** depicted in FIG. **4**.

Exemplary computer **101** includes a processor **103** that is coupled to a system bus **105**. Processor **103** may utilize one or more processors, each of which has one or more processor cores. A video adapter **107**, which drives/supports a display **109**, is also coupled to system bus **105**. System bus **105** is coupled via a bus bridge **111** to an input/output (I/O) bus **113**. An I/O interface **115** is coupled to I/O bus **113**. I/O interface **115** affords communication with various I/O devices, including a keyboard **117**, a mouse **119**, a media tray **121** (which may include storage devices such as CD-ROM drives, multi-media interfaces, etc.), a transceiver **123** (capable of transmitting and/or receiving electronic communication signals), and external USB port(s) **125**. While the format of the ports connected to I/O interface **115** may be any known to those skilled in the art of computer architecture, in one embodiment some or all of these ports are universal serial bus (USB) ports.

As depicted, computer **101** is able to communicate with a software deploying server **149** and/or other devices/systems (e.g., establishing communication among SDV **202**, SDV **210**, and/or roadway monitoring system **208** depicted in the figures below) using a network interface **129**. Network interface **129** is a hardware network interface, such as a network interface card (NIC), etc. Network **127** may be an external network such as the Internet, or an internal network such as an Ethernet or a virtual private network (VPN). In one or more embodiments, network **127** is a wireless network, such as a Wi-Fi network, a cellular network, etc.

A hard drive interface **131** is also coupled to system bus **105**. Hard drive interface **131** interfaces with a hard drive **133**. In one embodiment, hard drive **133** populates a system memory **135**, which is also coupled to system bus **105**. System memory is defined as a lowest level of volatile memory in computer **101**. This volatile memory includes additional higher levels of volatile memory (not shown), including, but not limited to, cache memory, registers and buffers. Data that populates system memory **135** includes computer **101**'s operating system (OS) **137** and application programs **143**.

OS **137** includes a shell **139**, for providing transparent user access to resources such as application programs **143**. Generally, shell **139** is a program that provides an interpreter and an interface between the user and the operating system. More specifically, shell **139** executes commands that are entered into a command line user interface or from a file. Thus, shell **139**, also called a command processor, is generally the highest level of the operating system software

hierarchy and serves as a command interpreter. The shell provides a system prompt, interprets commands entered by keyboard, mouse, or other user input media, and sends the interpreted command(s) to the appropriate lower levels of the operating system (e.g., a kernel **141**) for processing. While shell **139** is a text-based, line-oriented user interface, the present invention will equally well support other user interface modes, such as graphical, voice, gestural, etc.

As depicted, OS **137** also includes kernel **141**, which includes lower levels of functionality for OS **137**, including providing essential services required by other parts of OS **137** and application programs **143**, including memory management, process and task management, disk management, and mouse and keyboard management.

Application programs **143** include a renderer, shown in exemplary manner as a browser **145**. Browser **145** includes program modules and instructions enabling a world wide web (WWW) client (i.e., computer **101**) to send and receive network messages to the Internet using hypertext transfer protocol (HTTP) messaging, thus enabling communication with software deploying server **149** and other systems.

Application programs **143** in computer **101**'s system memory (as well as software deploying server **149**'s system memory) also include Logic for Managing Self-Driving Vehicles (LMSDV) **147**. LMSDV **147** includes code for implementing the processes described below, including those described in FIGS. **2-5**. In one embodiment, computer **101** is able to download LMSDV **147** from software deploying server **149**, including in an on-demand basis, wherein the code in LMSDV **147** is not downloaded until needed for execution. In one embodiment of the present invention, software deploying server **149** performs all of the functions associated with the present invention (including execution of LMSDV **147**), thus freeing computer **101** from having to use its own internal computing resources to execute LMSDV **147**.

Also within computer **101** is a positioning system **151**, which determines a real-time current location of computer **101** (particularly when part of an emergency vehicle and/or a self-driving vehicle as described herein). Positioning system **151** may be a combination of accelerometers, speedometers, etc., or it may be a global positioning system (GPS) that utilizes space-based satellites to provide triangulated signals used to determine two-dimensional or three-dimensional locations.

Also associated with computer **101** are sensors **153**, which detect an environment of the computer **101**. More specifically, sensors **153** are able to detect vehicles, road obstructions, pavement, etc. For example, if computer **101** is on board a self-driving vehicle (SDV), then sensors **153** may be cameras, radar transceivers, etc. that allow the SDV to detect the environment (e.g., other vehicles, road obstructions, pavement, etc.) of that SDV, thus enabling it to be autonomously self-driven. Similarly, sensors **153** may be cameras, thermometers, moisture detectors, etc. that detect ambient weather conditions.

In another embodiment, sensors **153** are sensors that detect an operational state of an SDV, including anomalous states such as, but not limited to, a presence of snow tires mounted on the SDV during a first road condition of the roadway, an absence of snow tires mounted on the SDV during a second road condition of the roadway, tire pressure in a tire mounted on the SDV being below a predetermined level, tire tread on a tire mounted on the SDV being less than a predefined limit, a windshield wiper edge of a windshield wiper mounted on the SDV being less than a predefined width, a level of windshield washer fluid in a windshield washer fluid reservoir mounted on the SDV being less than a predefined volume, an inoperable headlamp mounted on the SDV, condensation frosting of windows on the SDV exceeding a predetermined limit, a failure of an antilock breaking system in the SDV, a failure of an all wheel traction system in the SDV, and a faulty braking system in the SDV.

The hardware elements depicted in computer **101** are not intended to be exhaustive, but rather are representative to highlight essential components required by the present invention. For instance, computer **101** may include alternate memory storage devices such as magnetic cassettes, digital versatile disks (DVDs), Bernoulli cartridges, and the like. These and other variations are intended to be within the spirit and scope of the present invention.

The present invention describes a self-driving vehicle (SDV) traveling on a roadway. First, at any point in time the SDV may be in autonomous mode or manual mode, as described and discussed in detail herein. Second, the "roadway" upon which the SDV is traveling is defined as any surface capable of supporting the weight of the SDV, including but not limited to public streets, public highways, toll roads, parking lots, private road, open fields, etc. The streets/roads/lots may be paved or unpaved.

With reference now to FIG. **2**, an exemplary self-driving vehicle (SDV) **202** traveling along a roadway **204** in accordance with one or more embodiments of the present invention is presented. Additional details of one or more embodiments of the SDV **202** (which may have a same architecture as SDV **210** and/or SDV **212**, which are discussed below) are presented in FIG. **3**.

As shown in FIG. **3**, SDV **202** has an SDV on-board computer **301** that controls operations of the SDV **202**. According to directives from a driving mode module **307**, the SDV **202** can be selectively operated in manual mode or autonomous mode. In a preferred embodiment, driving mode module **307** is a dedicated hardware device that selectively directs the SDV on-board computer **301** to operate the SDV **202** in autonomous mode or manual mode.

While in manual mode, SDV **202** operates as a traditional motor vehicle, in which a human driver controls the engine throttle, engine on/off switch, steering mechanism, braking system, horn, signals, etc. found on a motor vehicle. These vehicle mechanisms may be operated in a "drive-by-wire" manner, in which inputs to an SDV control processor **303** by the driver result in output signals that control the SDV vehicular physical control mechanisms **305** (e.g., the engine throttle, steering mechanisms, braking systems, turn signals, etc.).

While in autonomous mode, SDV **202** operates without the input of a human driver, such that the engine, steering mechanism, braking system, horn, signals, etc. are controlled by the SDV control processor **303**, but now under the control of the SDV on-board computer **301**. That is, by processing inputs taken from navigation and control sensors **309** and the driving mode module **307** indicating that the SDV **202** is to be controlled autonomously, then driver inputs are no longer needed.

As just mentioned, the SDV on-board computer **301** uses outputs from navigation and control sensors **309** to control the SDV **202**. Navigation and control sensors **309** include hardware sensors that 1) determine the location of the SDV **202**; 2) sense other cars and/or obstacles and/or physical structures around SDV **202**; 3) measure the speed and direction of the SDV **202**; and 4) provide any other inputs needed to safely control the movement of the SDV **202**.

With respect to the feature of 1) determining the location of the SDV **202**, this can be achieved through the use of a

positioning system such as positioning system **151** shown in FIG. **1**. Positioning system **151** may use a global positioning system (GPS), which uses space-based satellites that provide positioning signals that are triangulated by a GPS receiver to determine a 3-D geophysical position of the SDV **202**. Positioning system **151** may also use, either alone or in conjunction with a GPS system, physical movement sensors such as accelerometers (which measure rates of changes to a vehicle in any direction), speedometers (which measure the instantaneous speed of a vehicle), airflow meters (which measure the flow of air around a vehicle), etc. Such physical movement sensors may incorporate the use of semiconductor strain gauges, electromechanical gauges that take readings from drivetrain rotations, barometric sensors, etc.

With respect to the feature of 2) sensing other cars and/or obstacles and/or physical structures around SDV **202**, the positioning system **151** may use radar or other electromagnetic energy that is emitted from an electromagnetic radiation transmitter (e.g., transceiver **323** shown in FIG. **3**), bounced off a physical structure (e.g., another car), and then received by an electromagnetic radiation receiver (e.g., transceiver **323**). By measuring the time it takes to receive back the emitted electromagnetic radiation, and/or evaluating a Doppler shift (i.e., a change in frequency to the electromagnetic radiation that is caused by the relative movement of the SDV **202** to objects being interrogated by the electromagnetic radiation) in the received electromagnetic radiation from when it was transmitted, the presence and location of other physical objects can be ascertained by the SDV on-board computer **301**.

With respect to the feature of 3) measuring the speed and direction of the SDV **202**, this can be accomplished by taking readings from an on-board speedometer (not depicted) on the SDV **202** and/or detecting movements to the steering mechanism (also not depicted) on the SDV **202** and/or the positioning system **151** discussed above.

With respect to the feature of 4) providing any other inputs needed to safely control the movement of the SDV **202**, such inputs include, but are not limited to, control signals to activate a horn, turning indicators, flashing emergency lights, etc. on the SDV **202**.

Returning to FIG. **2**, current conditions of the roadway **204**, including weather conditions, traffic conditions, the quantity of vehicles traveling along roadway **204**, the speed of vehicle traveling along roadway **204**, construction events, accident events, etc., can be determined and transmitted by the roadway monitoring system **208**. That is, roadway monitoring system **208** is able to determine current roadway conditions of roadway **204** based on internal sensors **153** shown in FIG. **1**, and/or from information received from SDV **202** and/or SDV **210** and/or SDV **212**, and/or from information received by an information service (e.g., a weather station), and or from information received by roadway sensor(s) **206** (e.g., thermometers, moisture detectors, vehicle detectors, etc. that are laid on top or and/or embedded within roadway **204**).

In accordance with one or more embodiments of the present invention, SDV **202** is selectively placed into autonomous mode or manual mode (described above) based on a detection of a vehicle fault in SDV **202**. Exemplary vehicle faults include, but are not limited to the presence or absence of snow tires when required or not required, inadequate tire pressure, inadequate tire tread, inadequate windshield wiper edge, inadequate windshield washer fluid, headlamp failure, extreme amounts of water on windows or under tires, window frosting, snow on the windows/windshield, ice on the windows/windshield, improper wheel alignment, excessive brake wear (i.e., brake pads being worn down such that less than a predefined amount of brake material is left), antilock brake failure, all wheel traction failure, and/or inadequate braking. A threshold for seriousness of the fault may be applied to vehicle measures in order to determine if the switch (from manual mode to autonomous mode or vice versa) is required. Vehicle faults may also be results of bugs (software, firmware, hardware bugs), or single-event upsets, that get reproduced in certain conditions.

Thus in one or more embodiments of the present invention, a vehicle monitoring system (e.g., SDV on-board computer **301** shown in FIG. **3**) detects a vehicle fault in the SDV. Based on the detected fault exceeding a threshold for danger, the SDV either switches from autonomous mode to manual mode or from manual mode to autonomous mode.

In one embodiment of the present invention, the vehicle monitoring system alters a route being taken by the SDV to a location where the fault may be remedied (e.g., a service station).

In one embodiment of the present invention, the vehicle monitoring system alters the route being taken by the SDV based on the severity of the fault (e.g., pulling over and stopping immediately, traveling to the nearest service station, traveling to the nearest dealership, returning to the owner's home, etc.).

In one embodiment of the present invention, the vehicle monitoring system has a fault-remediation table, where each row refers to a fault condition, a first column refers to a condition that gets manifested by that fault, and a second column that refers to the mode in which the vehicle should be driven when that condition is manifested. For example, a row may refer to a fault in the traction control system on the vehicle, the first column in that row may indicate that this fault is manifested by the vehicle hydroplaning, and the second column in that row may indicate that the vehicle needs to be taken out of autonomous mode and placed into manual mode, thus allowing the driver to manually control the speed and steering to stop the hydroplaning, which the automatic traction control system is unable to do. In one embodiment, this table is updated from a central server or offline systems based on other SDVs responding to the same fault. Thus, the SDV is able to apply the information from the table and changes driving mode as and when needed.

In one embodiment of the present invention, a driver profile provides an indication of the driver's physical or other abilities. This information is then used to further determine whether the SDV should be in autonomous or manual mode.

In one embodiment of the present invention, a further analysis of whether to place the SDV in autonomous or manual mode is performed if more than one person is in the vehicle (thus creating a possible distraction for the driver).

In one embodiment of the present invention, a further analysis of whether to place the SDV in autonomous or manual mode is performed if a person and a pet are in the same vehicle (another possible distraction for the driver).

In one or more embodiments of the present invention a weighted voting system is used to weight the various variables used in making the decision that is triggered by faults. Such inputs may include: a history of faults by one or more cars such as SDV **210** and SDV **212** shown in FIG. **2** (and the likely affects of such faults), votes by nearby cars, etc. Such weighted voting approaches may be characterized primarily by three aspects—the inputs, the weights, and the quota. The inputs are (I1, I2, . . . , IN), where N denotes the total number of inputs. An input's weight (w) is the number

of "votes" associated with the input. The quota (q) is the minimum number of votes required to "pass a motion", which in this case refers primarily to a decision made to place the SDV in manual mode or autonomous mode.

In one or more embodiments of the present invention, active learning is employed so that the system as a whole learns from the experiences of many SDVs and drivers, in different geographies and among cohorts. Geographies may include cities, rural areas, and the like. Cohorts may include people with certain characteristics, disabilities, etc.

Thus, the present invention allows switching between human operated (manual mode) and self-driving modes (autonomous modes) that takes into account the vehicle's operational condition and expected tolerances of the vehicle to the different modes. Since unexpected changes to vehicle condition can cause an immediate response by utilizing the present invention, safety of the vehicle is optimized. Furthermore, self-diagnosis of faults can result in an immediate change in vehicle location to optimally resolve the fault (for example, to drive to the nearest flat tire repair shop).

Besides the condition of the SDV **202**, the condition of roadway **204** and/or SDV **210** and/or SDV **212** is also used to determine whether to place SDV **202** in manual mode or autonomous mode. For example, if roadway is very narrow or runs along the side of a cliff, then SDV **202** likely would be safer if in autonomous mode. Similarly, if SDV **210** is experiencing a flat tire (as detected by an SDV on-board computer **301** within SDV **210**), this fault condition is relayed to the SDV on-board computer **301** within SDV **202**, either directly or via the coordinating server **201**. Using this information will prompt the SDV on-board computer **301** within SDV **202** to place SDV **202** into autonomous mode, which is better at handling unexpected movement of vehicles (e.g., the sudden slowing down and/or lateral movement of SDV **210**).

As depicted in FIG. **4**, coordinating server **401** (analogous to coordinating server **201** shown in FIG. **2**) and/or SDV **202** and/or SDV **210** and/or SDV **212** and/or roadway monitoring system **208** and/or roadway sensor(s) **206** (all introduced in FIG. **2**) are able to communicate with one another wirelessly, using a wireless transceiver (e.g., transceiver **123** shown in FIG. **1**) that is found in each of the coordinating server **401** and/or SDV **202** and/or SDV **210** and/or SDV **212** and/or roadway monitoring system **208** and/or roadway sensor(s) **206**. This wireless communication optimizes the decision to place SDV **202** in autonomous or manual mode by taking information from SDV **202** and/or SDV **210** and/or SDV **212** and/or roadway monitoring system **208** and/or roadway sensor(s) **206** in order to determine which mode (autonomous or manual) to place SDV **202** in.

With reference now to FIG. **5**, a high-level flow chart of one or more steps performed by one or more processors to control a driving mode of an SDV in accordance with one or more embodiments of the present invention is presented.

After initiator block **502**, one or more processors (e.g., processor **103** shown in FIG. **1**) receive sensor readings from a sensor (e.g., one or more of the sensors **153** shown in FIG. **1**), as described in block **504**. These sensor readings describe a current operational anomaly of an SDV (e.g., SDV **202** shown in FIG. **2**). This current operational anomaly may be a software bug in a control system for the SDV; worn down brake pads; worn down or tearing windshield wipers; a malfunctioning drivetrain; etc.

The SDV is capable of being operated in autonomous mode by an on-board SDV control processor (e.g., SDV control processor **303** shown in FIG. **3**) that is under the direct control of an SDV on-board computer (e.g., SDV on-board computer **301**) or another computer system (e.g., coordinating server **401** shown in FIG. **4**). A driving mode module selectively controls whether the SDV is operated in the autonomous mode (by the on-board SDV control processor) or in manual mode (in which the SDV is controlled by a human driver of the SDV).

As shown in block **506**, one or more processors determine a control processor competence level of the on-board SDV control processor. The control processor competence level describes a competence level of the on-board SDV control processor in controlling the SDV while the SDV experiences the current operational anomaly. Various approaches may be used to determine this control processor competence level.

In one embodiment of the present invention, the control processor competence level of the on-board SDV control processor is history-based. That is, a record is reviewed on how effective the on-board SDV control processor has been in controlling the current SDV **202** or similar types of SDVs (i.e., SDVs that have the same design and/or performance characteristics as SDV **202**) in situations in which the SDV are experiencing the same type of operational anomaly (e.g., tires with poor tread depth). This effectiveness may be based on past 1) accident frequency, 2) travel speed, 3) stopping and starting, 4) gas mileage, etc. That is, the control processor competence level of the on-board SDV control processor describes how well the on-board SDV control processor has been controlling SDV **202** or similar SDVs in terms of safety, cost, consistency, etc. when the current operational anomaly occurs within the SDV(s).

In one embodiment of the present invention, the control processor competence level of the on-board SDV control processor is based on an analysis of capability of the on-board SDV control processor. That is, a review of what control features can be handled by the on-board SDV control processor is used to define the control processor competence level of the on-board SDV control processor. For example, assume that such a review confirms that the on-board SDV control processor is able to control the speed of the SDV **202** (i.e., "cruise control"), but nothing else. As such, the control processor competence level of this on-board SDV control processor is relatively low when compared to an on-board SDV control processor that is able to automatically maintain safety distances (buffers of space) between other vehicles. Similarly, the control processor competence level of the on-board SDV control processor that can also maintain safety space cushions around the SDV has a control processor competence level that is lower than an on-board SDV control processor that is able to not only control the speed and safety cushion around the SDV, but can also control the steering of the SDV.

As described in block **508** of FIG. **5**, one or more processors receive a driver profile of the human driver of the SDV. This driver profile describes a human driver competence level of the human driver in controlling the SDV while the SDV experiences the current operational anomaly. That is, a driver may be very good at safely controlling the SDV when the air conditioning system on the SDV is working improperly, but may be very poor at safely controlling the SDV when the antilock braking system is not working and it is raining on the roadway.

In one embodiment of the present invention, the human driver competence level of the human driver is history-based. That is, a record is reviewed on how effectively this driver has controlled the current SDV **202** or similar types of SDVs that are experiencing the same operational anomaly as currently being experienced by SDV **202**. This effectiveness may be based on past 1) accident frequency, 2) travel

speed, 3) stopping and starting, 4) gas mileage, etc. That is, the human driver competence level of the human driver describes how well the current driver has controlled this or similar SDVs in terms of safety, cost, consistency, etc. in the past under the anomalous conditions being experienced by the vehicle.

In one embodiment of the present invention, the human driver competence level of the human driver is based on an analysis of capability of this human driver based on his traits/profile. That is, a review of this human driver's traits can lead to a conclusion regarding the strengths and weaknesses of this driver. For example, if this human driver has a record of poor night vision (as evidenced by a restriction on his/her license preventing him from driving at night), then the competence level of this driver to control a vehicle when a headlight is burned out is low.

As described in block **510** in FIG. **5**, one or more processors then compare the control processor competence level to the human driver competence level. In order to compare these two levels, different approaches can be taken.

In one embodiment of the present invention, each control factor (e.g., driving the SDV at night) is compared using the on-board SDV control processor versus the human driver. Each control factor that is relevant to the current operational anomaly of the SDV (e.g., driving at night in rainy conditions) is evaluated for both the on-board SDV control processor and the human driver. The control factors are then summed, in order to determine whether the on-board SDV control processor of the human driver is better at handling the SDV while the SDV is experiencing the current operational anomaly.

In one embodiment of the present invention, the control factors being compared and evaluated (for the on-board SDV control processor versus the human driver) are weighted according to their predetermined significance to the overall control of the SDV. For example, a review of all traffic accidents may show that failure to properly control spatial cushions between vehicles caused more accidents than failing to signal. Therefore, the control factor of failing to maintain spatial buffers around the vehicle is weighted more heavily than the control factor of controlling turn signals.

In one embodiment of the present invention, the control processor competence level and/or the human driver competence level are purely outcome based. That is, a history of safety, fuel efficiency, traffic flow (consistent or speeding up/slowing down), etc. of SDVs that are experiencing the operational anomaly are compared when being driven by the type of on-board SDV control processor in use by SDV **202** to a human driver having a similar profile as the current driver of the SDV **202**. Whichever type of operator (i.e., the on-board SDV control processor of the human driver) has been able to drive the SDV, under operational anomalous conditions similar to the current operational condition being experienced by the SDV, in a safer and more efficient manner is deemed to have a higher competence level.

A shown in query block **512**, a query is made as to which competence level is higher: the control processor competence level (CPCL) or the human driver competence level (HDCL). If the on-board SDV control processor is deemed to be better than the human driver in controlling the SDV while the SDV experiences the current operational anomaly (i.e., the on-board SDV control processor has a relatively higher competence level than that of the human driver), then control of the SDV is assigned to the on-board SDV (block **514**). That is, the SDV is placed in autonomous mode.

However, if the human driver is deemed to be better than the on-board SDV control processor in controlling the SDV while the SDV experiences the current operational anomaly (i.e., the human driver has a relatively higher competence level than that of the on-board SDV control processor), then control of the SDV is assigned to the human (i.e., the SDV is placed in manual mode), as described in block **516**.

In one embodiment of the present invention, an alert is issued before (or instead of) the driving mode module **307** and/or the SDV on-board computer **301** and/or the coordinating server **201** assigns the SDV to be operated in autonomous or manual mode. That is, in one embodiment, the driving mode module **307** and/or the SDV on-board computer **301** and/or the coordinating server **201** issues an alert (e.g., a message or icon displayed on a display within the cabin of the SDV **202**) advising the driver of the SDV **202** to manually engage the autonomous mode or to disengage the autonomous mode and take over manual control of the SDV **202**. This alert may simply precede the driving mode module **307** and/or the SDV on-board computer **301** and/or the coordinating server **201** automatically changes from autonomous mode to manual mode (or vice versa), or it may be the only action taken by the driving mode module **307** and/or the SDV on-board computer **301** and/or the coordinating server **201**, thus leaving the transition from autonomous mode to manual mode or vice versa up to the driver.

The flow-chart in FIG. **5** ends at terminator block **518**.

In one embodiment of the present invention, the comparison of the control processor competence level to the human driver competence level is general (i.e., whichever competence level is higher, regardless of what roadway is being traveled on). However, in another embodiment of the present invention, the comparison of the control processor competence level to the human driver competence level is roadway specific. That is, the competence levels are based on how well the SDV control processor and/or the human driver control the SDV on the specific roadway (roadway **204**) that the SDV is traveling on, and/or the current environmental conditions (traffic, weather, darkness, etc.) of that specific roadway.

As described herein, in one or more embodiments of the present invention wherein the current operational anomaly is from a group consisting of a presence of snow tires mounted on the SDV during a first road condition of the roadway (e.g., the SDV has snow tires but it is in the middle of summer, when snow tires provide less traction than when in snow in the winter), an absence of snow tires mounted on the SDV during a second road condition of the roadway (e.g., non-snow tires on the SDV in the middle of a blizzard), tire pressure in a tire mounted on the SDV being below or above a predetermined level (i.e., one or more tires are underinflated or overinflated), tire tread on a tire mounted on the SDV being less than a predefined limit (i.e., there is an insufficient amount of tread left on one or more tires), a level of windshield washer fluid in a windshield washer fluid reservoir mounted on the SDV being less than a predefined volume, an inoperable headlamp mounted on the SDV (i.e., a headlight is burned out), condensation frosting of windows on the SDV exceeding a predetermined limit, a failure of an antilock breaking system in the SDV, a failure of an all wheel traction system in the SDV, a low automatic transmission fluid level, a low windshield washer fluid level, a low fluid level in the radiator, and a faulty braking system in the SDV. These conditions may be detected by sensors (e.g., fluid sensors in the windshield washer fluid reservoir), cameras (e.g., an on-board camera aimed at the tires to detect the amount of tread and inflation in the tires),

mechanical sensors (e.g., sensors that detect problems in the drivetrain or braking system), etc.

In one embodiment of the present invention, a sensor (e.g., one of sensors **153** shown in FIG. **1**) used to describe current conditions of the roadway is mounted on the SDV. Sensor readings produced by the sensor describe environmental conditions of the SDV in real time. In this embodiment, one or more processors receive an environmental report from an environmental reporting service. The environmental report describes a general condition for the roadway. For example, a weather service ("environmental reporting service") may report via a data link (e.g., network **127** in FIG. **1**) to processors on the SDV that there is icing occurring on the roadway **206** shown in FIG. **2**.

One or more processors then compare environmental information from the environmental report to the sensor readings that describe the environmental conditions of the SDV in real time. In response to the environmental report disagreeing with the sensor readings, one or more processors disregard the sensor readings from the sensor and use the environmental report to describe the current condition of the roadway. That is, the processors will trust the weather report of ice on the roadway over what the sensors detect, since the sensors are only able to detect ice conditions (if at all) on the surface below the SDV at any point in time.

In one embodiment of the present invention, one or more processors retrieve driver profile information about the human driver of the SDV. The human driver of the SDV (e.g., SDV **202** shown in FIG. **2**) is assigned to a cohort of drivers traveling on the roadway in multiple SDVs (e.g., SDV **210** and SDV **212** shown in FIG. **2**). The current human driver of the SDV shares more than a predetermined quantity of traits with members of the cohort of drivers. The processor(s) retrieve traffic pattern data for the multiple SDVs occupied by the cohort of drivers traveling on the roadway, and then examine the traffic pattern data to determine a first traffic flow of the multiple SDVs occupied by members of the cohort of drivers. The SDVs in the first traffic flow are operating in the autonomous mode on the roadway.

The processor(s) also examine the traffic pattern data to determine a second traffic flow of the multiple SDVs occupied by members of the cohort of drivers. The multiple SDVs in the second traffic flow are operating in the manual mode on the roadway.

In response to determining that the first traffic flow has a lower accident rate than the second traffic flow, the processor(s) prohibit the SDV from operating in the manual mode.

For example, assume that a particular driver/occupant of an SDV has a characteristic (e.g., a history of traffic accidents while driving a vehicle in manual mode) found in other members of a cohort of drivers. Assume further that historical data shows that these cohort members have a history of accidents that is greater than that of on-board SDV control processors. Thus, if a particular driver matches up with the features found in members of this cohort, an assumption is made that this particular driver too is not as skilled as the on-board SDV control processor. As such, the control of the SDV is required to stay in autonomous mode, and is prohibited from switching to manual mode.

In one embodiment of the present invention, sensor readings are weighted and summed in order to determine whether or not an SDV should be required to operate in autonomous mode. Thus, one or more processors receive sensor readings from multiple sensors, where each of the multiple sensors detects a different type of anomalous operational condition of the vehicle. The processor(s) weight each of the sensor readings for different anomalous operational conditions of the vehicle, and then sum the weighted sensor readings for the anomalous operational conditions of the vehicle. The processor(s) determine whether the summed weighted sensor readings exceed a predefined level. In response to determining that the summed weighted sensor readings do exceed a predefined level, the on-board SDV control processor prohibits the SDV from operating in the manual mode. For example, assume that a first sensor detects faulty windshield wipers and the second sensor detects a faulty cabin air conditioning system. Assume further that historical data shows that many more accidents are caused by poor visibility (e.g., caused by faulty windshield wipers) than a warm cabin of the SDV. As such, the sensor readings from sensors that the faulty windshield wipers are weighted more heavily than sensor readings about cabin temperature. These weighted sensor readings are then added up. If the summed sensor reading weighted values exceed some predetermined value (which has been predetermined based on historic or engineering analyses as being a breakpoint over which the chance of accidents greatly increase), then control of the SDV must go into autonomous mode. However, if the summed sensor reading weighted values fall below this predetermined value, then control is pushed to (or left in) the manual mode.

In one or more embodiments of the present invention, the SDV **202** "learns" about how significant operational anomalies are. That is, by taking information from other SDVs and their driving history as well as the driving history of SDV **202** itself, SDV **202** is able to autonomous "learn" what operational anomalies are significant to the safe operation of SDV **202** (e.g., faulty brakes, faulty throttle controls, tires with little or no tread, etc.) and those which are comparatively insignificant (e.g., a cabin air conditioning system that is low on refrigerant, etc.).

In an embodiment of the present invention, if neither the autonomous mode nor the manual mode controls the SDV in a safe manner, then the SDV is autonomously pulled over to the side of the road and stopped. Thus, in this embodiment one or more processors set a minimum competence level threshold for the control processor competence level and the human driver competence level described above. The processor(s) then determines that neither the control processor competence level nor the human driver competence level meets or exceeds the minimum competence level threshold. In response to determining that neither the control processor competence level nor the human driver competence level exceeds the minimum competence level threshold, the driving mode module (e.g., driving mode module **307** in FIG. **3**) directs the on-board SDV control processor to take control of the SDV and to bring the SDV to a stop.

In one embodiment, the decision by the driving mode module **307** in FIG. **3** to place the SDV in autonomous mode or manual mode is further dictated by how well a particular driver or a particular SDV control processor handles a specific geometry of the roadway **204** shown in FIG. **2** while a certain anomalous operational condition is being experienced by SDV **202**. For example, assume that a particular driver manually maneuvers the SDV **202** around a cloverleaf exchange, in which the roadway loops around onto itself. If a driver does poorly in negotiating this cloverleaf exchange (e.g., hits the side of the cloverleaf barrier, is erratic in accelerating and/or braking through the cloverleaf, travels well above or well below the posted speed limit for the cloverleaf, etc.), as detected by various sensors **153** on the SDV **202**, then the system will not let that driver negotiate through future and similarly configured (e.g., shaped) clo-

verleaves on the roadway, particularly if the SDV **202** is experiencing a problem (operational anomaly) with the antilock braking system (ABS). Rather, the system (e.g., driving mode module **307**) will automatically engage the autonomous mode when the similarly configured cloverleaf comes up while the SDV **202** is experiencing this anomalous operational condition.

As described herein, in one embodiment of the present invention, the control processor competence level is based on a safety history for similar control processors in other SDVs. Thus, one or more processors retrieve control processor profile information about the SDV control processor that is on board the SDV. The processors(s) assign the SDV control processor that is on board the SDV to a cohort of SDV control processors in multiple other SDVs that are traveling on the roadway and experiencing a particular anomalous operational condition. This SDV control processor that is on board the SDV shares more than a predetermined quantity of traits with members of the cohort of SDV control processors. The processor(s) retrieve traffic pattern data for the multiple other SDVs that are traveling on the roadway, and then examine that traffic pattern data to determine a record of accidents for the multiple other SDVs traveling on the roadway while being controlled by the cohort of SDV control processors. The processor(s) then determine the control processor competence level (for the SDV control processor in SDV **202**) based on the record of accidents for the multiple SDVs (e.g., SDV **210** and SDV **212**) traveling on the roadway (e.g., roadway **204**) while being controlled by the cohort of SDV control processors and the SDV **202** is experiencing the particular anomalous operational condition.

In one embodiment of the present invention, if environmental sensors on the roadway indicate that road conditions are too hazardous to allow the driver to manually control the vehicle while the vehicle is experiencing the anomalous operational condition, then manual mode is prohibited. That is, in one embodiment of the present invention, one or more processors receive sensor readings from multiple sensors (e.g., roadway sensor(s) **206** shown in FIG. **2**). Each of the multiple sensors detects a different type of current condition of the roadway. The processor(s) weight each of the sensor readings for different current conditions of the roadway (e.g., one for temperature, one for darkness, one for precipitation, etc.), and then sum the weighted sensor readings for the different current conditions of the roadway. If summed weighted sensor readings exceed a predefined level, then the SDV control processor on the SDV prohibits the SDV from operating in the manual mode while the vehicle is experiencing the anomalous operational condition.

In one embodiment of the present invention, if the SDV control processor and the human driver are both incompetent to handle the operational anomaly (e.g., the SDV is on fire), then the SDV is automatically placed into autonomous mode and pulled over to the side of the road. That is, one or more processors set a minimum competence level threshold for the control processor competence level and the human driver competence level. If neither the control processor competence level nor the human driver competence level meets the minimum competence level threshold, then the driving mode module (e.g., driving mode module **307** in FIG. **3**) directs the SDV control processor to take control of the SDV and to bring the SDV to an immediate stop.

In one embodiment of the present invention, if the roadway is too narrow, or is along a cliff, or otherwise is unduly hazardous, then this fact is considered when placing the SDV in autonomous or manual mode. Usually this will result in the SDV being placed into autonomous mode, but in some situations (e.g., where GPS or other positioning signals are spotty) it may be preferable/safer to let the driver manually control the vehicle. Thus, in one embodiment of the present invention the SDV on-board computer **301** and/or controlling server **201** receive, from one or more roadway sensors (e.g., roadway sensor(s) **206** in FIG. **2**), a width of the roadway (e.g., roadway **204**). Based on this information, one or more processors (e.g., within driving mode module **307** shown in FIG. **3**) further selectively assign control of the SDV to the SDV control processor or to the human driver while the SDV experiences the current operational anomaly (and based on the width of the roadway).

In one embodiment of the present invention and as described above, the system will drive the SDV in autonomous mode to the nearest facility that can resolve the current operational anomaly. That is, control of the SDV is transferred to the SDV control processor, and then one or more processors (e.g., within SDV on-board computer **301**) receive a location of a resource provider that has been predetermined to be capable of ameliorating the current operational anomaly in the SDV. The SDV control processor then maneuvers the SDV to the location of the resource provider.

In one or more embodiments, the present invention is implemented in a cloud environment. It is understood in advance that although this disclosure includes a detailed description on cloud computing, implementation of the teachings recited herein are not limited to a cloud computing environment. Rather, embodiments of the present invention are capable of being implemented in conjunction with any other type of computing environment now known or later developed.

Cloud computing is a model of service delivery for enabling convenient, on-demand network access to a shared pool of configurable computing resources (e.g. networks, network bandwidth, servers, processing, memory, storage, applications, virtual machines, and services) that can be rapidly provisioned and released with minimal management effort or interaction with a provider of the service. This cloud model may include at least five characteristics, at least three service models, and at least four deployment models.

Characteristics are as Follows

On-demand self-service: a cloud consumer can unilaterally provision computing capabilities, such as server time and network storage, as needed automatically without requiring human interaction with the service's provider.

Broad network access: capabilities are available over a network and accessed through standard mechanisms that promote use by heterogeneous thin or thick client platforms (e.g., mobile phones, laptops, and PDAs).

Resource pooling: the provider's computing resources are pooled to serve multiple consumers using a multi-tenant model, with different physical and virtual resources dynamically assigned and reassigned according to demand. There is a sense of location independence in that the consumer generally has no control or knowledge over the exact location of the provided resources but may be able to specify location at a higher level of abstraction (e.g., country, state, or datacenter).

Rapid elasticity: capabilities can be rapidly and elastically provisioned, in some cases automatically, to quickly scale out and rapidly released to quickly scale in. To the consumer,

the capabilities available for provisioning often appear to be unlimited and can be purchased in any quantity at any time.

Measured service: cloud systems automatically control and optimize resource use by leveraging a metering capability at some level of abstraction appropriate to the type of service (e.g., storage, processing, bandwidth, and active user accounts). Resource usage can be monitored, controlled, and reported providing transparency for both the provider and consumer of the utilized service.

Service Models are as Follows

Software as a Service (SaaS): the capability provided to the consumer is to use the provider's applications running on a cloud infrastructure. The applications are accessible from various client devices through a thin client interface such as a web browser (e.g., web-based e-mail). The consumer does not manage or control the underlying cloud infrastructure including network, servers, operating systems, storage, or even individual application capabilities, with the possible exception of limited user-specific application configuration settings.

Platform as a Service (PaaS): the capability provided to the consumer is to deploy onto the cloud infrastructure consumer-created or acquired applications created using programming languages and tools supported by the provider. The consumer does not manage or control the underlying cloud infrastructure including networks, servers, operating systems, or storage, but has control over the deployed applications and possibly application hosting environment configurations.

Infrastructure as a Service (IaaS): the capability provided to the consumer is to provision processing, storage, networks, and other fundamental computing resources where the consumer is able to deploy and run arbitrary software, which can include operating systems and applications. The consumer does not manage or control the underlying cloud infrastructure but has control over operating systems, storage, deployed applications, and possibly limited control of select networking components (e.g., host firewalls).

Deployment Models are as Follows

Private cloud: the cloud infrastructure is operated solely for an organization. It may be managed by the organization or a third party and may exist on-premises or off-premises.

Community cloud: the cloud infrastructure is shared by several organizations and supports a specific community that has shared concerns (e.g., mission, security requirements, policy, and compliance considerations). It may be managed by the organizations or a third party and may exist on-premises or off-premises.

Public cloud: the cloud infrastructure is made available to the general public or a large industry group and is owned by an organization selling cloud services.

Hybrid cloud: the cloud infrastructure is a composition of two or more clouds (private, community, or public) that remain unique entities but are bound together by standardized or proprietary technology that enables data and application portability (e.g., cloud bursting for load-balancing between clouds).

A cloud computing environment is service oriented with a focus on statelessness, low coupling, modularity, and semantic interoperability. At the heart of cloud computing is an infrastructure comprising a network of interconnected nodes.

Referring now to FIG. **6**, a schematic of an example of a cloud computing node is shown. Cloud computing node **10** is only one example of a suitable cloud computing node and is not intended to suggest any limitation as to the scope of use or functionality of embodiments of the invention described herein. Regardless, cloud computing node **10** is capable of being implemented and/or performing any of the functionality set forth hereinabove.

In cloud computing node **10** there is a computer system/server **12**, which is operational with numerous other general purpose or special purpose computing system environments or configurations. Examples of well-known computing systems, environments, and/or configurations that may be suitable for use with computer system/server **12** include, but are not limited to, personal computer systems, server computer systems, thin clients, thick clients, hand-held or laptop devices, multiprocessor systems, microprocessor-based systems, set top boxes, programmable consumer electronics, network PCs, minicomputer systems, mainframe computer systems, and distributed cloud computing environments that include any of the above systems or devices, and the like.

Computer system/server **12** may be described in the general context of computer system-executable instructions, such as program modules, being executed by a computer system. Generally, program modules may include routines, programs, objects, components, logic, data structures, and so on that perform particular tasks or implement particular abstract data types. Computer system/server **12** may be practiced in distributed cloud computing environments where tasks are performed by remote processing devices that are linked through a communications network. In a distributed cloud computing environment, program modules may be located in both local and remote computer system storage media including memory storage devices.

As shown in FIG. **6**, computer system/server **12** in cloud computing node **10** is shown in the form of a general-purpose computing device. The components of computer system/server **12** may include, but are not limited to, one or more processors or processing units **16**, a system memory **28**, and a bus **18** that couples various system components including system memory **28** to processor **16**.

Bus **18** represents one or more of any of several types of bus structures, including a memory bus or memory controller, a peripheral bus, an accelerated graphics port, and a processor or local bus using any of a variety of bus architectures. By way of example, and not limitation, such architectures include Industry Standard Architecture (ISA) bus, Micro Channel Architecture (MCA) bus, Enhanced ISA (EISA) bus, Video Electronics Standards Association (VESA) local bus, and Peripheral Component Interconnects (PCI) bus.

Computer system/server **12** typically includes a variety of computer system readable media. Such media may be any available media that is accessible by computer system/server **12**, and it includes both volatile and non-volatile media, removable and non-removable media.

System memory **28** can include computer system readable media in the form of volatile memory, such as random access memory (RAM) **30** and/or cache memory **32**. Computer system/server **12** may further include other removable/non-removable, volatile/non-volatile computer system storage media. By way of example only, storage system **34** can be provided for reading from and writing to a non-removable, non-volatile magnetic media (not shown and typically called a "hard drive"). Although not shown, a magnetic disk drive for reading from and writing to a removable, non-volatile magnetic disk (e.g., a "floppy disk"), and an optical

disk drive for reading from or writing to a removable, non-volatile optical disk such as a CD-ROM, DVD-ROM or other optical media can be provided. In such instances, each can be connected to bus **18** by one or more data media interfaces. As will be further depicted and described below, memory **28** may include at least one program product having a set (e.g., at least one) of program modules that are configured to carry out the functions of embodiments of the invention.

Program/utility **40**, having a set (at least one) of program modules **42**, may be stored in memory **28** by way of example, and not limitation, as well as an operating system, one or more application programs, other program modules, and program data. Each of the operating system, one or more application programs, other program modules, and program data or some combination thereof, may include an implementation of a networking environment. Program modules **42** generally carry out the functions and/or methodologies of embodiments of the invention as described herein.

Computer system/server **12** may also communicate with one or more external devices **14** such as a keyboard, a pointing device, a display **24**, etc.; one or more devices that enable a user to interact with computer system/server **12**; and/or any devices (e.g., network card, modem, etc.) that enable computer system/server **12** to communicate with one or more other computing devices. Such communication can occur via Input/output (I/O) interfaces **22**. Still yet, computer system/server **12** can communicate with one or more networks such as a local area network (LAN), a general wide area network (WAN), and/or a public network (e.g., the Internet) via network adapter **20**. As depicted, network adapter **20** communicates with the other components of computer system/server **12** via bus **18**. It should be understood that although not shown, other hardware and/or software components could be used in conjunction with computer system/server **12**. Examples, include, but are not limited to: microcode, device drivers, redundant processing units, external disk drive arrays, RAID systems, tape drives, and data archival storage systems, etc.

Referring now to FIG. **7**, illustrative cloud computing environment **50** is depicted. As shown, cloud computing environment **50** comprises one or more cloud computing nodes **10** with which local computing devices used by cloud consumers, such as, for example, personal digital assistant (PDA) or cellular telephone **54**A, desktop computer **54**B, laptop computer **54**C, and/or automobile computer system **54**N may communicate. Nodes **10** may communicate with one another. They may be grouped (not shown) physically or virtually, in one or more networks, such as Private, Community, Public, or Hybrid clouds as described hereinabove, or a combination thereof. This allows cloud computing environment **50** to offer infrastructure, platforms and/or software as services for which a cloud consumer does not need to maintain resources on a local computing device. It is understood that the types of computing devices **54**A-N shown in FIG. **7** are intended to be illustrative only and that computing nodes **10** and cloud computing environment **50** can communicate with any type of computerized device over any type of network and/or network addressable connection (e.g., using a web browser).

Referring now to FIG. **8**, a set of functional abstraction layers provided by cloud computing environment **50** (FIG. **7**) is shown. It should be understood in advance that the components, layers, and functions shown in FIG. **8** are intended to be illustrative only and embodiments of the invention are not limited thereto. As depicted, the following layers and corresponding functions are provided:

Hardware and software layer **60** includes hardware and software components. Examples of hardware components include: mainframes **61**; RISC (Reduced Instruction Set Computer) architecture based servers **62**; servers **63**; blade servers **64**; storage devices **65**; and networks and networking components **66**. In some embodiments, software components include network application server software **67** and database software **68**.

Virtualization layer **70** provides an abstraction layer from which the following examples of virtual entities may be provided: virtual servers **71**; virtual storage **72**; virtual networks **73**, including virtual private networks; virtual applications and operating systems **74**; and virtual clients **75**.

In one example, management layer **80** may provide the functions described below. Resource provisioning **81** provides dynamic procurement of computing resources and other resources that are utilized to perform tasks within the cloud computing environment. Metering and Pricing **82** provide cost tracking as resources are utilized within the cloud computing environment, and billing or invoicing for consumption of these resources. In one example, these resources may comprise application software licenses. Security provides identity verification for cloud consumers and tasks, as well as protection for data and other resources. User portal **83** provides access to the cloud computing environment for consumers and system administrators. Service level management **84** provides cloud computing resource allocation and management such that required service levels are met. Service Level Agreement (SLA) planning and fulfillment **85** provide pre-arrangement for, and procurement of, cloud computing resources for which a future requirement is anticipated in accordance with an SLA.

Workloads layer **90** provides examples of functionality for which the cloud computing environment may be utilized. Examples of workloads and functions which may be provided from this layer include: mapping and navigation **91**; software development and lifecycle management **92**; virtual classroom education delivery **93**; data analytics processing **94**; transaction processing **95**; and self-driving vehicle control processing **96** (for selectively setting control of an SDV to manual or autonomous mode as described herein).

The terminology used herein is for the purpose of describing particular embodiments only and is not intended to be limiting of the present invention. As used herein, the singular forms "a", "an" and "the" are intended to include the plural forms as well, unless the context clearly indicates otherwise. It will be further understood that the terms "comprises" and/or "comprising," when used in this specification, specify the presence of stated features, integers, steps, operations, elements, and/or components, but do not preclude the presence or addition of one or more other features, integers, steps, operations, elements, components, and/or groups thereof.

The corresponding structures, materials, acts, and equivalents of all means or step plus function elements in the claims below are intended to include any structure, material, or act for performing the function in combination with other claimed elements as specifically claimed. The description of various embodiments of the present invention has been presented for purposes of illustration and description, but is not intended to be exhaustive or limited to the present invention in the form disclosed. Many modifications and variations will be apparent to those of ordinary skill in the art without departing from the scope and spirit of the present invention. The embodiment was chosen and described in order to best explain the principles of the present invention

and the practical application, and to enable others of ordinary skill in the art to understand the present invention for various embodiments with various modifications as are suited to the particular use contemplated.

Any methods described in the present disclosure may be implemented through the use of a VHDL (VHSIC Hardware Description Language) program and a VHDL chip. VHDL is an exemplary design-entry language for Field Programmable Gate Arrays (FPGAs), Application Specific Integrated Circuits (ASICs), and other similar electronic devices. Thus, any software-implemented method described herein may be emulated by a hardware-based VHDL program, which is then applied to a VHDL chip, such as a FPGA.

Having thus described embodiments of the present invention of the present application in detail and by reference to illustrative embodiments thereof, it will be apparent that modifications and variations are possible without departing from the scope of the present invention defined in the appended claims.

While the invention has been described with reference to an exemplary embodiment(s), it will be understood by those skilled in the art that various changes may be made and equivalents may be substituted for elements thereof without departing from the scope of the invention. In addition, many modifications may be made to adapt a particular situation or material to the teachings of the invention without departing from the essential scope thereof. Therefore, it is intended that the invention not be limited to the particular embodiment(s) disclosed, but that the invention will include all embodiments falling within the scope of the appended claims.

The invention claimed is:

1. A computer program product for controlling a driving mode of a self-driving vehicle (SDV), the computer program product comprising a non-transitory computer readable storage medium having instructions that, when executed, cause at least one data processing apparatus to perform operations comprising:

receiving a plurality of sensor readings from a system of sensors, wherein the system of sensors comprises: a steering wheel sensor, a speedometer, a GPS sensor, and a camera;

determining a competence level of a human driver using one or more of the sensor readings;

determining a competence level of the SDV using one or more of the sensor readings;

comparing the competence level of the human driver to a first threshold;

comparing the competence level of the human driver to a second threshold, wherein the second threshold is different from the first threshold;

determining that no fault has occurred when the competence level of the human driver exceeds the first threshold and exceeds the second threshold;

determining that a first fault has occurred when the competence level of the human driver exceeds the second threshold and is below the first threshold;

determining that a second fault has occurred when the competence level of the human driver is below the first threshold and is below the second threshold;

determining, using a fault remediation table, a first corrective action associated with the first fault, wherein the first corrective action comprises sounding a warning sound and displaying an icon on a display screen;

determining, using the fault remediation table, a second corrective action associated with the second fault, wherein the second corrective action comprises decreasing a speed of the SDV and transferring driver controls to manual control;

autonomously controlling the driver controls without requiring the human driver to control the driver controls when no fault has occurred, wherein the driver controls comprise: engine throttle, steering mechanism, and braking system;

taking the first corrective action when the first fault has occurred; and

taking the second corrective action when the second fault has occurred.

2. The computer program product of claim **1**, further comprising:

determining the competence level of the human driver comprises using a weighted voting system with a first plurality of inputs and a first plurality of weights, wherein:

the first plurality of inputs comprises one or more of the sensor readings;

at least one of the first plurality of inputs is multiplied by a weight from among the first plurality of weights, wherein the first plurality of weights are based on first active learning data, the first active learning data comprising information about a first cohort of human drivers of other SDVs;

determining the competence level of the SDV comprises using the weighted voting system with a second plurality of inputs and a second plurality of weights, wherein:

the second plurality of inputs comprises one or more of the sensor readings;

the second plurality of inputs comprises at least one sensor reading that is not in the first plurality of inputs;

the first plurality of inputs comprises at least one sensor reading that is not in the second plurality of inputs; and

at least one of the second plurality of inputs is multiplied by a weight from among the second plurality of weights, wherein the second plurality of weights are based on second active learning data, the second active learning data comprising condition data from a second cohort of other SDVs, wherein the condition data shares one or more traits with a current condition of a roadway on which the SDV is currently traveling.

3. The computer program product of claim **2**, further comprising:

when no fault has occurred, autonomously maintaining a buffer of space from other vehicles around the SDV without requiring the human driver to control the driver controls;

obtaining the first plurality of weights by querying a database; and

obtaining the second plurality of weights by querying the database.

4. The computer program product of claim **3**, further comprising:

tracking a number of times the first fault has occurred; and

determining the competence level of the human driver using the number of times the first fault has occurred.

5. The computer program product of claim **3**, further comprising:

tracking a length of time during which the first fault has occurred; and

determining the competence level of the human driver using the length of time during which the first fault has occurred.

6. The computer program product of claim **1**, further comprising:

determining, using one or more of the sensor readings, whether the SDV is travelling on a first roadway type or a second roadway type of a plurality of roadway types;

determining the competence level of the SDV comprises determining whether the SDV is currently operating in a first autonomous mode of a plurality of autonomous modes;

determining that a third fault has occurred when the SDV is currently travelling on the second roadway type and the competence level of the SDV is below a third threshold; and

determining, using the fault remediation table, a third corrective action associated with the third fault, wherein the third corrective action comprises transferring the driver controls to manual control.

7. The computer program product of claim **6**, further comprising:

the first roadway type comprises a public highway;

the second roadway type does not comprise a public highway;

operating in the first autonomous mode comprises autonomously controlling the driver controls without requiring the human driver to control the driver controls; and

determining the competence level of the SDV comprises determining that the competence level of the SDV is below the third threshold when the SDV is not currently operating in the first autonomous mode.

8. The computer program product of claim **1**, further comprising:

sensing an operational state of a first camera sensor;

determining, using a weighted voting system with a first plurality of inputs and a first plurality of weights, whether the first camera sensor is currently experiencing an operational anomaly;

the first plurality of inputs comprises sensor readings from the first camera sensor;

at least one of the first plurality of inputs is multiplied by a weight from among the first plurality of weights, wherein the first plurality of weights are based on first active learning data, the first active learning data comprising information about a cohort of other SDVs experiencing a camera sensor operational anomaly;

determining that a third fault has occurred when the first camera sensor is currently experiencing an operational anomaly.

9. The computer program product of claim **8**, further comprising:

determining the competence level of the human driver comprises using the weighted voting system with a second plurality of inputs and a second plurality of weights, wherein;

the second plurality of inputs comprises one or more of the sensor readings;

at least one of the second plurality of inputs is multiplied by a weight from among the second plurality of weights, wherein the second plurality of weights are based on second active learning data, the second active learning data comprising sensor readings about a first cohort of human drivers of other SDVs:

determining the competence level of the SDV comprises using the weighted voting system with a third plurality of inputs and a third plurality of weights, wherein:

the third plurality of inputs comprises one or more of the sensor readings;

the third plurality of inputs comprises at least one sensor reading that is not in the first plurality of inputs and is not in the second plurality of inputs;

the second plurality of inputs comprises at least one sensor reading that is not in the first plurality of inputs and is not in the third plurality of inputs; and

at least one of the third plurality of inputs is multiplied by a weight from among the third plurality of weights, wherein the third plurality of weights are based on third active learning data, the third active learning data comprising sensor readings about condition data from a second cohort of other SDVs, wherein the condition data shares one or more traits with a current condition of a roadway on which the SDV is currently traveling.

10. A self-driving vehicle (SDV) comprising:

a sensor system having a plurality of sensors, comprising:

a first camera;

a second camera;

a sensor configured to detect input from a steering wheel;

a GPS sensor;

a thermometer; and

a speedometer;

a display that is capable of displaying:

a reading from the GPS sensor;

a reading from the thermometer; and

a reading from the speedometer;

vehicle controls comprising: an engine throttle, a steering mechanism, and a braking system;

a non-transitory computer readable storage medium comprising a first plurality of weights, and the first plurality of weights comprising first active learning data from a first cohort of other SDVs:

the non-transitory computer readable storage medium comprises a second plurality of weights, and the second plurality of weights comprising second active learning data from the first cohort of other SDVs;

the non-transitory computer readable storage medium comprises a fault remediation table comprising a first quota, a second quota, a first corrective action, and a second corrective action;

a computer system comprising a processor coupled to the non-transitory computer readable storage medium and program code, the program code readable and executable by the processor, wherein the computer system is capable of performing operations comprising:

receiving a first plurality of inputs comprising readings from the first camera and the sensor configured to detect input from the steering wheel;

receiving a second plurality of inputs comprising readings from the second camera and the speedometer;

determining a first weighted voting result comprising multiplying a first input from among the first plurality of inputs by a weight from among the first plurality of weights;

determining a second weighted voting result comprising multiplying a second input from among the second plurality of inputs by a weight from among the second plurality of weights;

determining a competence level of a human driver using the first weighted voting result;

autonomously maintaining a buffer of space from other vehicles around the SDV using the vehicle controls and the second weighted voting result;

determining that a first fault has occurred when the competence level of the human driver is below the first quota; and

taking the first corrective action when the first fault has occurred.

11. The SDV of claim **10**, further comprising:

the computer system is further capable of performing operations comprising:

recording a number of times the first fault has occurred;

determining that a second fault has occurred when the number of times the first fault has occurred exceeds the second quota; and

taking the second corrective action when the second fault has occurred.

12. The SDV of claim **11**, further comprising:

the computer system is further capable of performing operations comprising:

taking the first corrective action comprising sounding a warning sound and displaying an icon on a display screen; and

taking the second corrective action comprising decreasing a speed of the SDV and transferring driver controls to manual control.

13. The SDV of claim **10**, further comprising:

the computer system is further capable of performing operations comprising:

recording a duration of time during which the first fault has occurred;

determining that a second fault has occurred when the duration of time during which the first fault has occurred exceeds the second quota; and

taking the second corrective action when the second fault has occurred.

14. The SDV of claim **13**, further comprising:

the computer system is further capable of performing operations comprising:

taking the first corrective action comprising sounding a warning sound and displaying an icon on a display screen; and

taking the second corrective action comprising decreasing a speed of the SDV and transferring driver controls to manual control.

15. A self-driving vehicle (SDV) comprising:

a sensor system having a plurality of sensors, comprising:

a first camera;

a second camera;

a sensor configured to detect input from a steering wheel;

a GPS sensor; and

a speedometer;

vehicle controls comprising: an engine throttle, a steering mechanism, a turn signal, and a braking system;

a non-transitory computer readable storage medium comprising:

a first plurality of weights;

a second plurality of weights; and

a fault remediation table comprising:

a first fault state;

a first corrective action associated with the first fault state;

a second fault state;

a second corrective action associated with the second fault state;

a third fault state; and

a third corrective action associated with the third fault state;

a computer system comprising a processor coupled to the non-transitory computer readable storage medium and program code, the program code readable and executable by the processor, wherein the computer system is capable of:

receiving a sensor reading from the system of sensors;

operating the vehicle controls;

receiving a first plurality of inputs, comprising readings from the first camera and the sensor configured to detect input from the steering wheel;

receiving a second plurality of inputs, comprising readings from the second camera;

generating a human driver profile;

generating a control processor profile;

taking the first corrective action when the first fault state has occurred;

taking the second corrective action when the second fault state has occurred; and

taking the third corrective action when the third fault state has occurred.

16. The SDV of claim **15**, further comprising:

the computer system is further capable of:

generating the human driver profile comprising using a human driver competence level;

generating the control processor profile comprising determining whether the computer system is currently operating in a first autonomous mode, a second autonomous mode, or a manual mode;

while operating in the first autonomous mode, autonomously maintaining a buffer of space from other vehicles around the SDV using the vehicle controls, without requiring the human driver to control the vehicle controls;

while operating in the second autonomous mode, autonomously controlling the engine throttle and the breaking system while the human driver controls the turn signal; and

while operating in the manual mode, allowing the human driver to control the vehicle controls.

17. The SDV of claim **16**, further comprising:

the first plurality of weights comprises first active learning data from a first cohort of other SDVs;

the second plurality of weights comprises second active learning data from a second cohort of other SDVs;

the computer system is further capable of:

generating a first weighted voting result comprising multiplying an input from among the first plurality of inputs by a weight from among the first plurality of weights; and

generating a second weighted voting result comprising multiplying an input from among the second plurality of inputs by a weight from among the second plurality of weights.

18. The SDV of claim **17**, further comprising:

the computer system is further capable of:

determining a length of time during which the sensor configured to detect input from the steering wheel has not detected an input from the human driver;

determining that the first fault state has occurred when the length of time exceeds a first threshold;

taking the first corrective action comprising sounding a warning sound and displaying an image on a display screen;

determining that the second fault state has occurred when the length of time exceeds a second threshold;

taking the second corrective action comprising switching to the manual mode;

determining, using the second weighted voting result, whether the SDV is currently traveling on a first roadway type or a second roadway type;

determining that the third fault state has occurred when the computer system is operating in the second autonomous mode and the SDV is currently traveling on the second roadway type; and

taking the third corrective action comprising switching to the manual mode.

19. The SDV of claim **18**, further comprising:

the first roadway type comprises a public highway; and

the second roadway type comprises a public street.

20. The SDV of claim **15**, further comprising:

the first plurality of weights comprises first active learning data from a first cohort of other SDVs;

the second plurality of weights comprises second active learning data from a second cohort of other SDVs;

the computer system is further capable of:

generating a first weighted voting result comprising multiplying an input from among the first plurality of inputs by a weight from among the first plurality of weights; and

generating a second weighted voting result comprising multiplying an input from among the second plurality of inputs by a weight from among the second plurality of weights.

21. The SDV of claim **20**, further comprising:

a display that is capable of displaying a position of another vehicle relative to the SDV;

the computer system is further capable of:

determining the position of another vehicle relative to the SDV using the second weighted voting result; and

autonomously maintaining a buffer of space from other vehicles around the SDV using the vehicle controls and the second weighted voting result.

22. The SDV of claim **21**, further comprising:

the computer system is further capable of:

determining a length of time during which the sensor configured to detect input from a steering wheel has not detected input from the human driver;

determining that the first fault state has occurred when the length of time exceeds a first threshold;

taking the first corrective action comprising sounding a warning sound and displaying an alert on a display screen; and

determining that the second fault state has occurred when a number of times the first fault state has occurred exceeds a second threshold.

23. The SDV of claim **22**, further comprising:

the computer system is further capable of:

determining, using the control processor profile, whether the computer system is currently operating in a first autonomous mode, a second autonomous mode, or a manual mode;

while operating in the first autonomous mode, autonomously maintaining a buffer of space from other vehicles around the SDV using the vehicle controls and the second weighted voting result, without requiring the human driver to control the vehicle controls;

while operating in the second autonomous mode, autonomously controlling the engine throttle and the breaking system while the human driver controls the turn signal;

while operating in the manual mode, allowing the human driver to control the vehicle controls; and

taking the second corrective action comprising the computer system switching from the first autonomous mode to the manual mode.

24. The SDV of claim **23**, further comprising:

the computer system is further capable of:

generating the human driver profile comprises using active learning data from a current human driver of the SDV;

determining that the third fault state has occurred using the human driver profile; and

taking the third corrective action comprising disabling the first autonomous mode.

25. The SDV of claim **24**, further comprising:

the fault remediation table further comprises a fourth fault state and a fourth corrective action associated with the fourth fault state;

the computer system is further capable of;

generating the human driver profile using active learning data from a current human driver of the SDV;

determining that the fourth fault state has occurred using the human driver profile; and

taking the fourth corrective action comprising disabling the first autonomous mode.

26. The SDV of claim **25**, further comprising:

the fault remediation table further comprises a fourth fault state and a fourth corrective action associated with the fourth fault state;

the computer system is further capable of: generating the human driver profile using active learning data from a current human driver of the SDV;

determining that the fourth fault state has occurred using the human driver profile; and

taking the fourth corrective action comprising the computer system disabling the first autonomous mode.

27. The SDV of claim **23**, further comprising:

the computer system is further capable of:

determining the third fault state has occurred comprising determining a current weather condition of a roadway on which the SDV is currently traveling; and

taking the third corrective action comprising switching from the first autonomous mode to the manual mode.

28. The SDV of claim **23**, further comprising:

the computer system is further capable of:

determining the third fault state has occurred comprising detecting an absence of lane markings on a roadway on which the SDV is currently traveling; and

taking the third corrective action comprising switching from the first autonomous mode to the manual mode.

29. A computer program product for controlling a driving mode of a self-driving vehicle (SDV), the computer program product comprising a non-transitory computer readable storage medium having program code embodied therewith, the program code readable and executable by a processor to perform a method comprising:

receiving a plurality of sensor readings from a system of sensors, the system of sensors comprising:

a camera directed at a human driver;

a camera directed away from the SDV;

a sensor configured to detect input from a steering wheel;

a GPS sensor;

a thermometer; and

a speedometer;

displaying, on a display screen, one or more sensor readings of the sensor readings;

determining, using one or more sensor readings of the sensor readings, a position of another vehicle currently on a roadway;

determining a competence level of the SDV using one or more of the sensor readings, wherein the competence level of the SDV is a function of a degree of uncertainty in the determined position of the other vehicle;

autonomously controlling driver controls without requiring the human driver to control the driver controls, wherein the driver controls comprise: engine throttle, a steering mechanism, and braking system;

autonomously maintaining a buffer of space between the SDV and the other vehicle;

determining a competence level of a human driver using one or more of the sensor readings;

determining, using a fault remediation table, a first corrective action associated with a first human competence level, wherein the first corrective action comprises sounding a warning sound and displaying an icon on a display screen;

determining, using the fault remediation table, a second corrective action associated with a second human competence level, wherein the second corrective action comprises decreasing a speed of the SDV and transferring driver controls to manual control;

taking the first corrective action when the competence level of the human driver satisfies a first competence quota; and

taking the second corrective action when the competence level of the human driver satisfies a second competence quota.

30. The computer program product of claim **29**, further comprising:

displaying, on the display screen, a graphical representation of the position of the other vehicle relative to the SDV and a graphical representation of the competence level of the SDV.

31. The computer program product of claim **29**, further comprising:

determining the competence level of the human driver comprises using a weighted voting system with a first plurality of inputs and a first plurality of weights, wherein:

the first plurality of inputs comprises one or more sensor readings of the sensor readings;

at least one of the first plurality of inputs is multiplied by a weight from among the first plurality of weights, wherein the first plurality of weights are based on first active learning data, the first active learning data comprising information about a first cohort of human drivers of other SDVs; and

determining the competence level of the SDV comprises using the weighted voting system with a second plurality of inputs and a second plurality of weights, wherein:

the second plurality of inputs comprises one or more of the sensor readings;

the second plurality of inputs comprises at least one sensor reading that is not in the first plurality of inputs; and

at least one of the second plurality of inputs is multiplied by a weight from among the second plurality of weights, wherein the second plurality of weights are based on second active learning data, the second active learning data comprising condition data from a second cohort of other SDVs, wherein the condition data shares one or more traits with a current condition of the roadway on which the SDV is currently traveling.

32. The computer program product of claim **31**, further comprising:

determining, using one or more sensor readings of the sensor readings, the position of a lane marking on the roadway;

determining, using one or more sensor readings of the sensor readings, the position of a traffic signal; and

displaying, on the display screen, a simultaneous graphical representation of the position of the other vehicle, the position of the lane marking on the roadway, the position of the traffic signal, and the competence level of the SDV.

33. The computer program product of claim **32**, further comprising:

autonomously changing lanes without requiring the human driver to control the driver controls;

autonomously engaging a turn signal of the SDV prior to autonomously changing lanes without requiring the human driver to control the turn signal;

determining, using the fault remediation table, a third corrective action associated with a first SDV competence level; and

taking the third corrective action when the competence level of the SDV is equivalent to or below the first SDV competence level.

34. The computer program product of claim **33**, further comprising:

the third corrective action comprises decreasing a speed of the SDV and transferring the driver controls to manual control; and

the competence level of the human driver is a function of a sensor reading from the camera directed at the human driver.

35. The computer program product of claim **34**, further comprising:

retrieving a human driver profile from a database;

determining, using the fault remediation table, a fourth corrective action associated with a first human driver profile quota, wherein the fourth corrective action comprises disabling an autonomous driving mode; and

taking the fourth corrective action when the human driver profile is equivalent to or below the first human driver profile quota.

36. The computer program product of claim **35**, further comprising:

the human driver profile is a function of a previous sensor reading from the camera directed at the human driver;

the human driver profile is a function of a previous sensor reading from the camera directed away from the SDV;

the human driver profile is a function of a previous sensor reading from the sensor configured to detect input from the steering wheel; and

the human driver profile is a function of a previous sensor reading from the speedometer.

37. A computer program product for controlling a driving mode of a self-driving vehicle (SDV), the computer program product comprising a non-transitory computer readable storage medium having program code embodied therewith, the program code readable and executable by a processor to perform a method comprising:

receiving one or more sensor readings from a system of sensors, wherein the system of sensors comprises one or more sensors that detect an operational state of the SDV, the one or more sensors comprising:

a camera directed away from the SDV;

a sensor configured to detect input from a steering wheel;

a GPS sensor;

a thermometer; and

a speedometer;

determining a competence level of a control processor as a function of the operational state of the SDV;

comparing the competence level of the control processor to a first threshold;

comparing the competence level of the control processor to a second threshold, wherein the first threshold is higher than the second threshold:

autonomously controlling driver controls without requiring a human driver to control the driver controls when the competence level of the control processor is above the first threshold;

determining a first fault has occurred when the competence level of the control processor is between the first threshold and the second threshold;

determining a second fault has occurred when the competence level of the control processor is below the second threshold; and

performing a corrective action listed in a fault remediation table, comprising:

displaying a warning message on a display screen when the first fault occurs; and

sounding a warning sound, displaying a warning message, displaying an icon on the display screen, and transferring the driver controls to manual control when the second fault occurs.

38. The computer program product of claim **37**, further comprising:

comparing the competence level of the control processor to a third threshold, wherein the third threshold is between the first threshold and the second threshold; and

determining a third fault has occurred when the competence level of the control processor is between the third threshold and the second threshold.

39. The computer program product of claim **38**, further comprising:

the operational state of the SDV comprises a current weather condition of a roadway on which the SDV is currently traveling; and

autonomously altering a route being taken by the SDV when the third fault occurs.

* * * * *