of an area in the vicinity of the vehicle; determining from the plurality of images a first lane constraint on a first side of the vehicle; determining from the plurality of images a second lane constraint on a second side of the vehicle opposite to the first side of the vehicle, wherein the first and second lane constraints define a lane within which the vehicle travels and wherein a first distance corresponds to a distance between the first side of the vehicle and the first lane constraint and a second distance corresponds to a distance between the second side of the vehicle and the second lane constraint; determining, based on the plurality of images, whether a lane offset condition exists on the first side of the vehicle; if a lane offset condition exists on the first side of the vehicle, causing the vehicle to travel within the first and second lane constraints such that the first distance is greater than the second distance; determining, based on the plurality of images, whether a lane offset condition exists on the second side of the vehicle; and if a lane offset condition exists on the second side of the vehicle, causing the vehicle to travel within the first and second lane constraints such that the first distance is less than the second distance.

[010] Consistent with a disclosed embodiment, a driver assist navigation system is provided for a vehicle. The system may include at least one image capture device configured to acquire a plurality of images of an area in a vicinity of the vehicle; a data interface; and at least one processing device. The at least processing device may be configured to: receive the plurality of images via the data interface; determine from the plurality of images a current lane of travel from among a plurality of available travel lanes; and cause the vehicle to change lanes if the current lane of travel is not the same as a predetermined default travel lane.

[011] Consistent with the disclosed embodiment, the predetermined default travel lane may be a right-most lane among the plurality of available travel lanes. The at least one processing device may be configured to activate a turn signal prior to causing the vehicle to change lanes. The at least one processing device may be configured to cause an audible announcement prior to causing the vehicle to change lanes. The at least one processing device may be configured to cause an audible indicator prior to causing the vehicle to change lanes. The predetermined default travel lane may be determined based on the plurality of images of the area in the vicinity of the vehicle, based on data received from a global positioning system, and/or based on an input received from a user.

[012] Consistent with another disclosed embodiment, a vehicle may include a body; at least one image capture device configured to acquire a plurality of images of an area in a vicinity of the vehicle; a data interface; and at least one processing device. The at least one processing device may be configured to: receive the plurality of images via the data interface; determine from the plurality of images a current lane of travel from among a plurality of available travel lanes; and cause the vehicle to change lanes if the current lane of travel is not the same as a predetermined default travel lane.

[013] Consistent with the disclosed embodiment, the predetermined default travel lane may be a right-most lane among the plurality of available travel lanes. The at least one processing device may be configured to activate a turn signal prior to causing the vehicle to change lanes. The at least one processing device may be configured to cause an audible announcement prior to causing the vehicle to change lanes. The at least one processing device may be configured to cause an audible indicator prior to

IPR2025-01034
Tesla EX1002 Page 1667

causing the vehicle to change lanes. The predetermined default travel lane may be determined based on the plurality of images of the area in the vicinity of the vehicle, based on data received from a global positioning system, and/or based on an input received from a user.

[014] Consistent with another disclosed embodiment, a method is provided for navigating a vehicle. The method may include acquiring, using at least one image capture device, a plurality of images of an area in a vicinity of the vehicle; determining from the plurality of images a current lane of travel from among a plurality of available travel lanes; and causing the vehicle to change lanes if the current lane of travel is not the same as a predetermined default travel lane.

[015] Consistent with the disclosed embodiment, the predetermined default travel lane may be a right-most lane among the plurality of available travel lanes. A turn signal may be activated prior to causing the vehicle to change lanes. The predetermined default travel lane may be determined based on the plurality of images of the area in the vicinity of the vehicle.

[016] Consistent with a disclosed embodiment, a driver assist navigation system is provided for a vehicle. The system may include at least one image capture device configured to acquire a plurality of images of an area in a vicinity of the vehicle; a data interface; and at least one processing device. The at least one processing device may be configured to: receive the plurality of images via the data interface; recognize a curve to be navigated based on map data and vehicle position information; determine an initial target velocity for the vehicle based on at least one characteristic of the curve as reflected in the map data; adjust a velocity of the vehicle to the initial target velocity; determine, based on the plurality of images, one or more observed characteristics of the curve; determine an updated target velocity based on the one or more observed characteristics of the curve; and adjust the velocity of the vehicle to the updated target velocity.

[017] Consistent with the disclosed embodiment, the at least one characteristic of the curve may include an expected radius of curvature for the curve as determined from the map data. The initial target velocity may be determined based on the expected radius of curvature for the curve and a lateral acceleration limit. The lateral acceleration limit may be between about 0.2 m/sec^2 and 3.0 m/sec^2. Alternatively, the lateral acceleration limit may be between about 1.5 m/sec^2 and 3.0 m/sec^2. The lateral acceleration limit may be adjusted based on a road width determined based on the plurality of images. The one or more observed characteristics of the curve may include an actual radius of curvature for the curve as determined through analysis of the plurality of images. The updated target velocity may be determined based on the actual radius of curvature for the curve and a lateral acceleration limit. The one or more observed characteristics of the curve may include a rate of change in an actual radius of curvature for the curve as determined through analysis of the plurality of images. The one or more observed characteristics of the curve may include a degree of banking associated with the curve as determined through analysis of the plurality of images. The one or more observed characteristics of the curve may include information, determined through analysis of the plurality of images, relating to the curve conveyed by one or more road signs. The initial target velocity may also be based on a focal range of the at least one image capture device. The initial target velocity may also be based on whether a traffic light

IPR2025-01034
Tesla EX1002 Page 1668

is determined to be located along the curve. The initial target velocity may also be based on whether a traffic light is determined to be located within a predetermined distance after the curve.

[018] Consistent with another disclosed embodiment, a vehicle may include a body; at least one image capture device configured to acquire a plurality of images of an area in a vicinity of the vehicle; a data interface; and at least one processing device. The at least one processing device may be configured to: receive the plurality of images via the data interface; recognize a curve to be navigated based on map data and vehicle position information; determine an initial target velocity for the vehicle based on at least one characteristic of the curve as reflected in the map data; adjust a velocity of the vehicle to the initial target velocity; determine, based on the plurality of images, one or more observed characteristics of the curve; determine an updated target velocity based on the one or more observed characteristics of the curve; and adjust the velocity of the vehicle to the updated target velocity.

[019] Consistent with the disclosed embodiment, the at least one characteristic of the curve may include an expected radius of curvature for the curve as determined from the map data. The initial target velocity may be determined based on the expected radius of curvature for the curve and a lateral acceleration limit. The lateral acceleration limit may be adjusted based on a road width determined based on the plurality of images. The one or more observed characteristics of the curve may include an actual radius of curvature for the curve as determined through analysis of the plurality of images. The updated target velocity may be determined based on the actual radius of curvature for the curve and a lateral acceleration limit. The one or more observed characteristics of the curve may include a rate of change in an actual radius of curvature for the curve as determined through analysis of the plurality of images. The one or more observed characteristics of the curve may include a degree of banking associated with the curve as determined through analysis of the plurality of images. The one or more observed characteristics of the curve may include information, determined through analysis of the plurality of images, relating to the curve conveyed by one or more road signs. The initial target velocity may also be based on a focal range of the at least one image capture device. The initial target velocity may also be based on whether a traffic light is determined to be located along the curve. The initial target velocity may also be based on whether a traffic light is determined to be located within a predetermined distance after the curve.

[020] Consistent with another disclosed embodiment, a method is provided for navigating a vehicle. The method may include acquiring, using at least one image capture device, a plurality of images of an area in a vicinity of the vehicle; recognizing a curve to be navigated based on map data and vehicle position information; determining an initial target velocity for the vehicle based on at least one characteristic of the curve as reflected in the map data; adjusting a velocity of the vehicle to the initial target velocity; determining, based on the plurality of images, one or more observed characteristics of the curve; determining an updated target velocity based on the one or more observed characteristics of the curve; and adjusting the velocity of the vehicle to the updated target velocity.

[021] Consistent with a disclosed embodiment, a driver assist navigation system is provided for a primary vehicle. The system may include at least one image capture device configured to acquire a plurality of images of an area in a vicinity of the primary vehicle; a data interface; and at least one

IPR2025-01034
Tesla EX1002 Page 1669

processing device. The at least one processing device may be configured to: receive the plurality of images via the data interface; determine, from at least some of the plurality of images, a first lane constraint on a first side of the primary vehicle; determine, from at least some of the plurality of images, a second lane constraint on a second side of the primary vehicle opposite to the first side of the primary vehicle, wherein the first and second lane constraints define a lane within which the primary vehicle travels; cause the primary vehicle to travel within the first and second lane constraints; locate in the plurality of images a leading vehicle; determine, based on the plurality of images, at least one action taken by the leading vehicle; and cause the primary vehicle to mimic the at least one action of the leading vehicle.

[022] Consistent with the disclosed embodiment, at least one of the first and second lane constraints may include a line marked on a road surface. At least one of the first and second lane constraints may include an edge of a road surface. At least one of the first and second lane constraints may include a determined midpoint of a road surface width. The at least one action taken by the leading vehicle may include a turn, and the at least one processing device may cause the primary vehicle to execute a similar turn beginning at a location at which the leading vehicle initiated its turn. The at least one action taken by the leading vehicle may include an acceleration. The at least one action taken by the leading vehicle may include braking. The at least one action taken by the leading vehicle may include providing a first offset distance on a side of the leading vehicle adjacent to the first lane constraint that is different from a second offset distance on a side of the leading vehicle adjacent to the second lane constraint. The at least one processing device may be further configured to determine, based on the plurality of images or based on map data and position information, whether the leading vehicle is turning at an intersection, and if the leading vehicle is determined to be turning at an intersection, decline to mimic the turn of the leading vehicle. The at least one processing device may be configured to determine, based on the plurality of images or based on map data and position information, whether the leading vehicle is turning at an intersection, determine whether the leading vehicle is changing lanes within the intersection, mimic the turn of the leading vehicle if the leading vehicle is determined to be turning at an intersection and not changing lanes within the intersection, and decline to mimic the turn of the leading vehicle if the leading vehicle is determined to be turning at an intersection, but changing lanes within the intersection. The at least one processing device may be configured to acquire a first leading vehicle based on the plurality of images, acquire a second leading vehicle based on the plurality of images, and cause the primary vehicle to mimic the first leading vehicle if, based on the plurality of images, the first leading vehicle is determined to be continuing on a path having less of a turning radius than a path followed by the second leading vehicle. The at least one processing device may be configured to determine position information for the leading vehicle and compare the position information to predetermined map data, create a navigation history for the leading vehicle by tracking movements of the leading vehicle relative to the predetermined map data, and determine whether to cause the primary vehicle to mimic the at least one action of the leading vehicle based on the navigation history of the leading vehicle. The at least one processing device may be configured to cause the primary vehicle to mimic a turn of the leading vehicle,

IPR2025-01034
Tesla EX1002 Page 1670

even where no turn is detected based on the plurality of images, when the navigation history indicates that the leading vehicle has successfully navigated at least one prior turn.

[023] Consistent with another disclosed embodiment, a primary vehicle may include a body; at least one image capture device configured to acquire a plurality of images of an area in a vicinity of the primary vehicle; a data interface; and at least one processing device. The at least one processing device may be configured to: receive the plurality of images via the data interface; determine, from at least some of the plurality of images, a first lane constraint on a first side of the primary vehicle; determine, from at least some of the plurality of images, a second lane constraint on a second side of the primary vehicle opposite to the first side of the primary vehicle, wherein the first and second lane constraints define a lane within which the primary vehicle travels; cause the primary vehicle to travel within the first and second lane constraints; locate in the plurality of images a leading vehicle; determine, based on the plurality of images, at least one action taken by the leading vehicle; and cause the primary vehicle to mimic the at least one action of the leading vehicle.

[024] Consistent with the disclosed embodiment, at least one of the first and second lane constraints may include a line marked on a road surface. At least one of the first and second lane constraints may include an edge of a road surface. At least one of the first and second lane constraints may include a determined midpoint of a road surface width. The at least one action taken by the leading vehicle may include a turn, and the at least one processing device may cause the primary vehicle to execute a similar turn beginning at a location at which the leading vehicle initiated its turn. The at least one action taken by the leading vehicle may include an acceleration. The at least one action taken by the leading vehicle may include braking. The at least one action taken by the leading vehicle may include providing a first offset distance on a side of the leading vehicle adjacent to the first lane constraint that is different from a second offset distance on a side of the leading vehicle adjacent to the second lane constraint. The at least one processing device may be further configured to determine, based on the plurality of images or based on map data and position information, whether the leading vehicle is turning at an intersection, and if the leading vehicle is determined to be turning at an intersection, decline to mimic the turn of the leading vehicle. The at least one processing device may be configured to determine, based on the plurality of images or based on map data and position information, whether the leading vehicle is turning at an intersection, determine whether the leading vehicle is changing lanes within the intersection, mimic the turn of the leading vehicle if the leading vehicle is determined to be turning at an intersection and not changing lanes within the intersection, and decline to mimic the turn of the leading vehicle if the leading vehicle is determined to be turning at an intersection, but changing lanes within the intersection. The at least one processing device may be configured to acquire a first leading vehicle based on the plurality of images, acquire a second leading vehicle based on the plurality of images, and cause the primary vehicle to mimic the first leading vehicle if, based on the plurality of images, the first leading vehicle is determined to be continuing on a path having less of a turning radius than a path followed by the second leading vehicle. The at least one processing device may be configured to determine position information for the leading vehicle and compare the position information to predetermined map data,

IPR2025-01034
Tesla EX1002 Page 1671

create a navigation history for the leading vehicle by tracking movements of the leading vehicle relative to the predetermined map data, and determine whether to cause the primary vehicle to mimic the at least one action of the leading vehicle based on the navigation history of the leading vehicle. The at least one processing device may be configured to cause the primary vehicle to mimic a turn of the leading vehicle, even where no turn is detected based on the plurality of images, when the navigation history indicates that the leading vehicle has successfully navigated at least one prior turn.

[025] Consistent with another disclosed embodiment, a method is provided for navigating a primary vehicle. The method ma include acquiring, using at least one image capture device, a plurality of images of an area in a vicinity of the primary vehicle; determining, from at least some of the plurality of images, a first lane constraint on a first side of the primary vehicle; determining, from at least some of the plurality of images, a second lane constraint on a second side of the primary vehicle opposite to the first side of the primary vehicle, wherein the first and second lane constraints define a lane within which the primary vehicle travels; causing the primary vehicle to travel within the first and second lane constraints; locating in the plurality of images a leading vehicle; determining, based on the plurality of images, at least one action taken by the leading vehicle; and causing the primary vehicle to mimic the at least one action of the leading vehicle.

[026] Consistent with a disclosed embodiment, a driver assist navigation system is provided for a user vehicle. They system may include at least one image capture device configured to acquire a plurality of images of an area in a vicinity of the user vehicle; a data interface; and at least one processing device. The at least one processing device may be configured to: receive the plurality of images via the data interface; determine from the plurality of images a first lane constraint on a first side of the user vehicle; determine from the plurality of images a second lane constraint on a second side of the user vehicle opposite to the first side of the user vehicle, wherein the first and second lane constraints define a lane within which the user vehicle travels: acquire, based on the plurality of images, a target vehicle; enable the user vehicle to pass the target vehicle if the target vehicle is determined to be in a lane different from the lane in which the user vehicle is traveling; monitor a position of the target vehicle based on the plurality of images; and cause the user vehicle to abort the pass before completion of the pass, if the target vehicle is determined to be entering the lane in which the user vehicle is traveling.

[027] Consistent with the disclosed embodiment, causing the user vehicle to abort the pass may include causing an application of brakes in the user vehicle. Causing the user vehicle to abort the pass may include causing an audible announcement. Causing the user vehicle to abort the pass may include causing the user vehicle to stop accelerating. Monitoring the position of the target vehicle may include estimating a speed of the target vehicle. At least one of the first and second lane constraints may include a line marked on a road surface, an edge of a road surface, and/or a determined midpoint of a road surface width.

[028] Consistent with another disclosed embodiment, a user vehicle may include at least one image capture device configured to acquire a plurality of images of an area in a vicinity of the user vehicle; a data interface; and at least one processing device. The at least one processing device may be

IPR2025-01034
Tesla EX1002 Page 1672

configured to: receive the plurality of images via the data interface; determine from the plurality of images a first lane constraint on a first side of the user vehicle; determine from the plurality of images a second lane constraint on a second side of the user vehicle opposite to the first side of the user vehicle, wherein the first and second lane constraints define a lane within which the user vehicle travels; acquire, based on the plurality of images, a target vehicle; enable the user vehicle to pass the target vehicle if the target vehicle is determined to be in a lane different from the lane in which the user vehicle is traveling; monitor a position of the target vehicle based on the plurality of images; and cause the user vehicle to abort the pass before completion of the pass, if the target vehicle is determined to be entering the lane in which the user vehicle is traveling.

[029] Consistent with the disclosed embodiment, causing the user vehicle to abort the pass may include causing an application of brakes in the user vehicle. Causing the user vehicle to abort the pass may include causing an audible announcement. Causing the user vehicle to abort the pass may include causing the user vehicle to stop accelerating. Monitoring the position of the target vehicle may include estimating a speed of the target vehicle. At least one of the first and second lane constraints may include a line marked on a road surface, an edge of a road surface, and/or a determined midpoint of a road surface width.

[030] Consistent with another disclosed embodiment, a method is provided for navigating a user vehicle. The method may include acquiring, using at least one image capture device, a plurality of images of an area in a vicinity of the user vehicle; determining from the plurality of images a first lane constraint on a first side of the user vehicle; determining from the plurality of images a second lane constraint on a second side of the user vehicle opposite to the first side of the user vehicle, wherein the first and second lane constraints define a lane within which the user vehicle travels; acquiring, based on the plurality of images, a target vehicle; enabling the user vehicle to pass the target vehicle if the target vehicle is determined to be in a lane different from the lane in which the user vehicle is traveling; monitoring a position of the target vehicle based on the plurality of images; and causing the user vehicle to abort the pass before completion of the pass, if the target vehicle is determined to be entering the lane in which the user vehicle is traveling.

[031] Consistent with the disclosed embodiment, causing the user vehicle to abort the pass may include causing an application of brakes in the user vehicle. Causing the user vehicle to abort the pass may include causing the user vehicle to stop accelerating. At least one of the first and second lane constraints may include a line marked on a road surface, an edge of a road surface, and/or a determined midpoint of a road surface width.

[032] Consistent with a disclosed embodiment, a driver assist navigation system is provided for a user vehicle. The system may include at least one image capture device configured to acquire a plurality of images of an area in a vicinity of the user vehicle; a data interface; and at least one processing device. The at least one processing device may be configured to: receive the plurality of images via the data interface; determine from the plurality of images a first lane constraint on a first side of the user vehicle; determine from the plurality of images a second lane constraint on a second side of the user vehicle

IPR2025-01034
Tesla EX1002 Page 1673

opposite to the first side of the user vehicle, wherein the first and second lane constraints define a lane within which the user vehicle travels; determine, based on the plurality of images, whether an encroaching vehicle is approaching from a side of the user vehicle; and cause the user vehicle to maintain a current velocity and to travel within the first and second lane constraints such that a first distance, on the side of the user vehicle that the encroaching vehicle is approaching from, is greater than a second distance.

[033] Consistent with the disclosed embodiment, the at least one processing device may be further configured to cause the user vehicle to take evasive action if analysis of the plurality of images indicates that the encroaching vehicle has crossed at least one collision threshold. The evasive action may include changing lanes, altering course, and/or braking. The at least one collision threshold may include a minimum predetermined distance to maintain between the user vehicle and the encroaching vehicle. The at least one collision threshold may include a time to collision. The at least one processing device may be configured to cause the user vehicle to return to a center of the lane, within which the user vehicle originally traveled, after completion of the evasive action. The at least one image capture device may have a field of view of at least 140 degrees. The at least one processing device may be configured to cause the user vehicle to resume a preset speed after braking in response to an encroaching vehicle. The at least one processing device may be configured to cause the user vehicle to return to a lane location within the first and second lane constraints such that the first distance between the user vehicle and the first lane constraint is substantially equal to the second distance between the user vehicle and the second lane constraint after altering course in response to an encroaching vehicle.

[034] Consistent with another disclosed embodiment, a user vehicle may include at least one image capture device configured to acquire a plurality of images of an area in a vicinity of the user vehicle; a data interface; and at least one processing device. The at least one processing device may be configured to: receive the plurality of images via the data interface; determine from the plurality of images a first lane constraint on a first side of the user vehicle; determine from the plurality of images a second lane constraint on a second side of the user vehicle opposite to the first side of the user vehicle, wherein the first and second lane constraints define a lane within which the user vehicle travels; determine, based on the plurality of images, whether an encroaching vehicle is approaching from a side of the user vehicle; and cause the user vehicle to maintain a current velocity and to travel within the first and second lane constraints such that a first distance, on the side of the user vehicle that the encroaching vehicle is approaching from, is greater than a second distance.

[035] Consistent with the disclosed embodiment, the at least one processing device may be further configured to cause the user vehicle to take evasive action if analysis of the plurality of images indicates that the encroaching vehicle has crossed at least one collision threshold. The evasive action may include changing lanes, altering course, and/or braking. The at least one collision threshold may include a minimum predetermined distance to maintain between the user vehicle and the encroaching vehicle. The at least one collision threshold may include a time to collision. The at least one processing device may be configured to cause the user vehicle to return to a center of the lane, within which the user vehicle

IPR2025-01034
Tesla EX1002 Page 1674

originally traveled, after completion of the evasive action. The at least one image capture device may have a field of view of at least 140 degrees. The at least one processing device may be configured to cause the user vehicle to resume a preset speed after braking in response to an encroaching vehicle. The at least one processing device may be configured to cause the user vehicle to return to a lane location within the first and second lane constraints such that the first distance between the user vehicle and the first lane constraint is substantially equal to the second distance between the user vehicle and the second lane constraint after altering course in response to an encroaching vehicle.

[036] Consistent with another disclosed embodiment, a method for navigating a user vehicle is provided. The method may include acquiring, using at least one image capture device, a plurality of images of an area in a vicinity of the user vehicle; determining from the plurality of images a first lane constraint on a first side of the user vehicle; determining from the plurality of images a second lane constraint on a second side of the user vehicle opposite to the first side of the user vehicle, wherein the first and second lane constraints define a lane within which the user vehicle travels; determining, based on the plurality of images, whether an encroaching vehicle is approaching from a side of the user vehicle; and causing the user vehicle to maintain a current velocity and to travel within the first and second lane constraints such that a first distance, on the side of the user vehicle that the encroaching vehicle is approaching from, is greater than a second distance.

[037] Consistent with a disclosed embodiment, a driver assist navigation system is provided for a primary vehicle. They system may include at least one image capture device configured to acquire a plurality of images of an area in a vicinity of the primary vehicle; a data interface; and at least one processing device. The at least processing device may be configured to: receive the plurality of images via the data interface; identify a target object within the plurality of images; monitor, via the plurality of images, a motion of the target object and a distance between the primary vehicle and the target object; determine an indicator of an intercept time between the primary vehicle and the target object based on the monitored motion and the distance between the primary vehicle and the target object; and cause a response in the primary vehicle based on a comparison of the intercept time to a plurality of predetermined intercept thresholds.

[038] Consistent with the disclosed embodiment, the target object may be a target vehicle traveling in a lane different from the primary vehicle. The intercept time may be based on an indicator of speed of the tracked object, as determined based on the plurality of images. The intercept time may be based on an indicator of an acceleration of the tracked object, as determined based on the plurality of images. The at least one processing device may be further configured to determine whether the target object is traveling in the same lane as the primary vehicle, and forego the response in the primary vehicle if the target object is determined to be traveling in a lane different from the primary vehicle. Determination of whether the target object is traveling in the same lane as the primary vehicle may be based on the plurality of images. Determination of whether the target object is traveling in the same lane as the primary vehicle may be based on at least one of predetermined map data or yaw rate of the primary vehicle. The response may be based on an averaged motion profile associated with the target object if the

IPR2025-01034
Tesla EX1002 Page 1675

indicator of intercept time indicates that the target object is outside a first intercept threshold relative to the vehicle. The response may be based on actual motion of the target object if the indicator of intercept time indicates that the target object is between the first intercept threshold and a second intercept threshold relative to the vehicle. The response may include an emergency avoidance action if the indicator of intercept time indicates that the target object is within the second intercept threshold. The emergency avoidance action may include changing lanes and/or emergency braking.

[039] Consistent with another disclosed embodiment, a primary vehicle may include a body; at least one image capture device configured to acquire a plurality of images of an area in a vicinity of the primary vehicle; a data interface; and at least one processing device. The at least one processing device may be configured to: receive the plurality of images via the data interface; identify a target object within the plurality of images; monitor, via the plurality of images, a motion of the target object and a distance between the primary vehicle and the target object; determine an indicator of an intercept time between the primary vehicle and the target object based on the monitored motion and the distance between the primary vehicle and the target object; and cause a response in the primary vehicle based on a comparison of the intercept time to a plurality of predetermined intercept thresholds.

[040] Consistent with the disclosed embodiment, the target object may be a target vehicle traveling in a lane different from the primary vehicle. The intercept time may be based on an indicator of speed of the tracked object, as determined based on the plurality of images. The intercept time may be based on an indicator of an acceleration of the tracked object, as determined based on the plurality of images. The at least one processing device may be further configured to determine whether the target object is traveling in the same lane as the primary vehicle, and forego the response in the primary vehicle if the target object is determined to be traveling in a lane different from the primary vehicle. Determination of whether the target object is traveling in the same lane as the primary vehicle may be based on the plurality of images. Determination of whether the target object is traveling in the same lane as the primary vehicle may be based on at least one of predetermined map data or yaw rate of the primary vehicle. The response may be based on an averaged motion profile associated with the target object if the indicator of intercept time indicates that the target object is outside a first intercept threshold relative to the vehicle. The response may be based on actual motion of the target object if the indicator of intercept time indicates that the target object is between the first intercept threshold and a second intercept threshold relative to the vehicle. The response may include an emergency avoidance action if the indicator of intercept time indicates that the target object is within the second intercept threshold. The emergency avoidance action may include changing lanes and/or emergency braking.

[041] Consistent with another disclosed embodiment, a method for navigating a primary vehicle may include acquiring, via at least one image capture device, a plurality of images of an area in a vicinity of the primary vehicle; identifying a target object within the plurality of images; monitoring, based on the plurality of images, a motion of the target object and a distance between the primary vehicle and the target object; determining an indicator of an intercept time between the primary vehicle and the target object based on the monitored motion and the distance between the primary vehicle and the target

IPR2025-01034
Tesla EX1002 Page 1676

object; and causing a response in the primary vehicle based on a comparison of the intercept time to a plurality of predetermined intercept thresholds.

[042] Consistent with a disclosed embodiment, a driver assist navigation system is provided for a vehicle. The system may include at least one image capture device configured to acquire a plurality of images of an area in a vicinity of the vehicle; a data interface; and at least one processing device. The at least one processing device may be configured to: receive the plurality of images via the data interface; identify, based on analysis of the plurality of images, a trigger for stopping the vehicle; and based on the identified trigger, cause the vehicle to stop according to a braking profile including a first segment associated with a first deceleration rate, a second segment which includes a second deceleration rate less than the first deceleration rate, and a third segment in which a level of braking is decreased as a target stopping location is approached, as determined based on the analysis of the plurality of images.

[043] Consistent with the disclosed embodiment, reaching of the target stopping location may be accompanied by a release in braking pressure. The trigger may include an object. The object may include another vehicle in front of the vehicle. The trigger may include a traffic light signal, a stop sign, and/or a speed limit sign. The at least one processing device may be further configured to provide an audible announcement identifying the trigger. The at least one processing device may be configured to cause an audible announcement indicating that the vehicle is braking.

[044] Consistent with another disclosed embodiment, a vehicle may include a body; at least one image capture device configured to acquire a plurality of images of an area in a vicinity of the vehicle; a data interface; and at least one processing device. The at least one processing device may be configured to: receive the plurality of images via the data interface; identify, based on analysis of the plurality of images, a trigger for stopping the vehicle; and based on the identified trigger, cause the vehicle to stop according to a braking profile including a first segment associated with a first deceleration rate, a second segment which includes a second deceleration rate less than the first deceleration rate, and a third segment in which a level of braking is decreased as a target stopping location is approached, as determined based on the analysis of the plurality of images.

[045] Consistent with the disclosed embodiment, reaching of the target stopping location may be accompanied by a release in braking pressure. The trigger may include an object. The object may include another vehicle in front of the vehicle. The trigger may include a traffic light signal, a stop sign, and/or a speed limit sign. The at least one processing device may be further configured to provide an audible announcement identifying the trigger. The at least one processing device may be configured to cause an audible announcement indicating that the vehicle is braking.

[046] Consistent with another disclosed embodiment, a method is provided for navigating a vehicle. The method may include acquiring, via at least one image capture plurality of images of an area in a vicinity of the vehicle; identifying, based on analysis of the plurality of images, a trigger for stopping the vehicle; and based on the identified trigger, causing the vehicle to stop according to a braking profile including a first segment associated with a first deceleration rate, a second segment which includes a second deceleration rate less than the first deceleration rate, and a third segment in which a level of

IPR2025-01034
Tesla EX1002 Page 1677

braking is decreased as a target stopping location is approached, as determined based on the analysis of the plurality of images.

[047] Consistent with other disclosed embodiments, non-transitory computer-readable storage media may store program instructions, which are executed by at least one processing device and perform any of the methods described herein.

[048] The foregoing general description and the following detailed description are exemplary and explanatory only and are not restrictive of the claims.

BRIEF DESCRIPTION OF THE DRAWINGS

[049] The accompanying drawings, which are incorporated in and constitute a part of this disclosure, illustrate various disclosed embodiments. In the drawings:

[050] FIG. 1 is a diagrammatic representation of an exemplary system consistent with the disclosed embodiments.

[051] FIG. 2A is a diagrammatic side view representation of an exemplary vehicle including a system consistent with the disclosed embodiments.

[052] FIG. 2B is a diagrammatic top view representation of the vehicle and system shown in FIG. 2A consistent with the disclosed embodiments.

[053] FIG. 2C is a diagrammatic top view representation of another embodiment of a vehicle including a system consistent with the disclosed embodiments.

[054] FIG. 2D is a diagrammatic top view representation of yet another embodiment of a vehicle including a system consistent with the disclosed embodiments.

[055] FIG. 2E is a diagrammatic top view representation of yet another embodiment of a vehicle including a system consistent with the disclosed embodiments.

[056] FIG. 2F is a diagrammatic representation of exemplary vehicle control systems consistent with the disclosed embodiments.

[057] FIG. 3A is a diagrammatic representation of an interior of a vehicle including a rearview mirror and a user interface for a vehicle imaging system consistent with the disclosed embodiments.

[058] FIG. 3B is an illustration of an example of a camera mount that is configured to be positioned behind a rearview mirror and against a vehicle windshield consistent with the disclosed embodiments.

[059] FIG. 3C is an illustration of the camera mount shown in FIG. 3B from a different perspective consistent with the disclosed embodiments.

[060] FIG. 3D is an illustration of an example of a camera mount that is configured to be positioned behind a rearview mirror and against a vehicle windshield consistent with the disclosed embodiments.

[061] FIG. 4 is an exemplary block diagram of a memory configured to store instructions for performing one or more operations consistent with the disclosed embodiments.

[062] FIG. 5A is a flowchart showing an exemplary process for causing one or more navigational responses based on monocular image analysis consistent with disclosed embodiments.

IPR2025-01034
Tesla EX1002 Page 1678

[063] FIG. 5B is a flowchart showing an exemplary process for detecting one or more vehicles and/or pedestrians in a set of images consistent with the disclosed embodiments.

[064] FIG. 5C is a flowchart showing an exemplary process for detecting road marks and/or lane geometry information in a set of images consistent with the disclosed embodiments.

[065] FIG. 5D is a flowchart showing an exemplary process for detecting traffic lights in a set of images consistent with the disclosed embodiments.

[066] FIG. 5E is a flowchart showing an exemplary process for causing one or more navigational responses based on a vehicle path consistent with the disclosed embodiments.

[067] FIG. 5F is a flowchart showing an exemplary process for determining whether a leading vehicle is changing lanes consistent with the disclosed embodiments.

[068] FIG. 6 is a flowchart showing an exemplary process for causing one or more navigational responses based on stereo image analysis consistent with the disclosed embodiments.

[069] FIG. 7 is a flowchart showing an exemplary process for causing one or more navigational responses based on an analysis of three sets of images consistent with the disclosed embodiments.

[070] FIG. 8A is a diagrammatic representation of an exemplary vehicle traveling within a first and a second lane constraint in which a lane offset condition exists on the first vehicle side consistent with the disclosed embodiments.

[071] FIG. 8B is a diagrammatic representation of an exemplary vehicle traveling within a first and a second lane constraint in which a lane offset condition exists on the second vehicle side consistent with the disclosed embodiments.

[072] FIG. 8C is a diagrammatic representation of an exemplary vehicle traveling within a first and a second lane constraint on a curved road consistent with the disclosed embodiments.

[073] FIG. 8D is a diagrammatic representation of an exemplary vehicle traveling within a first and a second lane constraint in which a lane offset condition exists on both the first vehicle side and on the second vehicle side consistent with the disclosed embodiments.

[074] FIG. 9 is a diagrammatic representation of the memory of an exemplary navigation system consistent with the disclosed embodiments.

[075] FIG. 10 is a flowchart of an exemplary method for navigating a vehicle consistent with the disclosed embodiments.

[076] FIG 11 is a diagrammatic representation of an exemplary vehicle including a navigation system traveling within a default lane consistent with the disclosed embodiments.

[077] FIG 12A is a diagrammatic representation of the memory of an exemplary navigation system consistent with the disclosed embodiments.

[078] FIG 12B is a flowchart of an exemplary process for navigating a vehicle consistent with the disclosed embodiments.

[079] FIGS. 13A and 13B are diagrammatic representations of an exemplary vehicle approaching, and navigating, a curve with one or more characteristics consistent with the disclosed embodiments.

IPR2025-01034
Tesla EX1002 Page 1679

[080] FIG. 14 is an exemplary block diagram of a memory configured to store instructions for performing one or more operations consistent with the disclosed embodiments.

[081] FIG. 15 is a flow chart showing an exemplary process for controlling the velocity of a vehicle based on a detected curve and observed characteristics of the curve consistent with disclosed embodiments.

[082] FIGS. 16A-16D are diagrammatic representations of a primary vehicle mimicking one or more actions of a leading vehicle consistent with the disclosed embodiments.

[083] FIG. 17 is an exemplary block diagram of a memory configured to store instructions for performing one or more operations consistent with the disclosed embodiments.

[084] FIG. 18 is a flow chart showing an exemplary process for causing a primary vehicle to mimic one or more actions of a leading vehicle consistent with disclosed embodiments.

[085] FIG. 19 is a flow chart showing an exemplary process for causing a primary vehicle to decline to mimic a turn of a leading vehicle consistent with disclosed embodiments.

[086] FIG. 20 is a flow chart showing an exemplary process for causing a primary vehicle to mimic or decline a turn of a leading vehicle consistent with disclosed embodiments.

[087] FIG. 21 is a flow chart showing another exemplary process for causing a primary vehicle to mimic one or more actions of a leading vehicle consistent with disclosed embodiments.

[088] FIG. 22 is a flow chart showing an exemplary process for causing a primary vehicle to mimic one or more actions of a leading vehicle based on a navigation history consistent with disclosed embodiments.

[089] FIG. 23 is a diagrammatic representation of an exemplary vehicle traveling within a first and a second lane constraint on a roadway along on which another vehicle is traveling consistent with the disclosed embodiments.

[090] FIG. 24A is a diagrammatic representation of a memory storing instructions for navigating a vehicle among encroaching vehicles consistent with the disclosed embodiments.

[091] FIG. 24B is a flowchart of an exemplary process for navigating a vehicle among encroaching vehicles consistent with the disclosed embodiments.

[092] FIG. 25 is a diagrammatic representation of an exemplary vehicle traveling within a first and a second lane constraint on a roadway along on which another vehicle is traveling consistent with the disclosed embodiments.

[093] FIG. 26 is a diagrammatic representation of a memory storing instructions for detecting and responding to traffic laterally encroaching on a vehicle consistent with the disclosed embodiments.

[094] FIG. 27 is a flowchart of an exemplary process for detecting and responding to traffic laterally encroaching on a vehicle consistent with the disclosed embodiments.

[095] FIGS. 28A and 28B are diagrammatic representations of causing a response in a primary vehicle consistent with the disclosed embodiments.

[096] FIG. 29 is an exemplary block diagram of a memory configured to store instructions for performing one or more operations consistent with the disclosed embodiments.

IPR2025-01034
Tesla EX1002 Page 1680

[097] FIG. 30 is a flow chart showing an exemplary process for causing a response in a primary vehicle consistent with disclosed embodiments.

[098] FIG. 31 is a flow chart showing an exemplary process for declining to cause a response in a primary vehicle consistent with disclosed embodiments.

[099] FIG. 32A is a diagrammatic representation of an exemplary vehicle in which an object is present in the vicinity of vehicle consistent with the disclosed embodiments.

[0100] FIG. 32B illustrates an exemplary braking profile, consistent with the disclosed embodiments.

[0101] FIG. 33 is a diagrammatic representation of the memory of an exemplary navigation system consistent with the disclosed embodiments.

[0102] FIG. 34 is a flowchart of an exemplary method for implementing a braking profile while navigating a vehicle consistent with the disclosed embodiments.

DETAILED DESCRIPTION

[0103] The following detailed description refers to the accompanying drawings. Wherever possible, the same reference numbers are used in the drawings and the following description to refer to the same or similar parts. While several illustrative embodiments are described herein, modifications, adaptations and other implementations are possible. For example, substitutions, additions or modifications may be made to the components illustrated in the drawings, and the illustrative methods described herein may be modified by substituting, reordering, removing, or adding steps to the disclosed methods. Accordingly, the following detailed description is not limited to the disclosed embodiments and examples. Instead, the proper scope is defined by the appended claims.

[0104] Disclosed embodiments provide systems and methods that use cameras to provide autonomous navigation features. In various embodiments, the system may include one, two or more cameras that monitor the environment of a vehicle. In one embodiment, the system may monitor and adjust the free space between a vehicle and the boundaries of the lane within which the vehicle is traveling. In another embodiment, the system may select a particular lane as a default lane for the vehicle to use while traveling. In another embodiment, the system may control the speed of the vehicle in different scenarios, such as while making a turn. In yet another embodiment, the system may mimic the actions of a leading vehicle. In yet another embodiment, the system may monitor a target vehicle and enable the vehicle to pass the target vehicle under certain conditions (e.g., if the target vehicle is traveling in a lane different from the lane within which the vehicle is traveling. In still yet another embodiment, the system may produce a natural feeling response to a laterally encroaching vehicle, such as a vehicle attempting to move into the lane within which the vehicle is traveling.

[0105] FIG. 1 is a block diagram representation of a system 100 consistent with the exemplary disclosed embodiments. System 100 may include various components depending on the requirements of a particular implementation. In some embodiments, system 100 may include a processing unit 110, an image acquisition unit 120, a position sensor 130, one or more memory units 140, 150, a map database 160, and a user interface 170. Processing unit 110 may include one or more processing devices. In some

IPR2025-01034
Tesla EX1002 Page 1681

embodiments, processing unit 110 may include an applications processor 180, an image processor 190, or any other suitable processing device. Similarly, image acquisition unit 120 may include any number of image acquisition devices and components depending on the requirements of a particular application. In some embodiments, image acquisition unit 120 may include one or more image capture devices (e.g., cameras), such as image capture device 122, image capture device 124, and image capture device 126. System 100 may also include a data interface 128 communicatively connecting processing device 110 to image acquisition device 120. For example, data interface 128 may include any wired and/or wireless link or links for transmitting image data acquired by image accusation device 120 to processing unit 110.

[0106] Both applications processor 180 and image processor 190 may include various types of processing devices. For example, either or both of applications processor 180 and image processor 190 may include a microprocessor, preprocessors (such as an image preprocessor), graphics processors, a central processing unit (CPU), support circuits, digital signal processors, integrated circuits, memory, or any other types of devices suitable for running applications and for image processing and analysis. In some embodiments, applications processor 180 and/or image processor 190 may include any type of single or multi-core processor, mobile device microcontroller, central processing unit, etc. Various processing devices may be used, including, for example, processors available from manufacturers such as Intel®, AMD®, etc. and may include various architectures (e.g., x86 processor, ARM®, etc.).

[0107] In some embodiments, applications processor 180 and/or image processor 190 may include any of the EyeQ series of processor chips available from Mobileye®. These processor designs each include multiple processing units with local memory and instruction sets. Such processors may include video inputs for receiving image data from multiple image sensors and may also include video out capabilities. In one example, the EyeQ2® uses 90nm-micron technology operating at 332Mhz. The EyeQ2® architecture consists of two floating point, hyper-thread 32-bit RISC CPUs (MIPS32® 34K® cores), five Vision Computing Engines (VCE), three Vector Microcode Processors (VMP®), Denali 64-bit Mobile DDR Controller, 128-bit internal Sonics Interconnect, dual 16-bit Video input and 18-bit Video output controllers, 16 channels DMA and several peripherals. The MIPS34K CPU manages the five VCEs, three VMP™ and the DMA, the second MIPS34K CPU and the multi-channel DMA as well as the other peripherals. The five VCEs, three VMP® and the MIPS34K CPU can perform intensive vision computations required by multi-function bundle applications. In another example, the EyeQ3®, which is a third generation processor and is six times more powerful that the EyeQ2®, may be used in the disclosed embodiments.

[0108] While FIG. 1 depicts two separate processing devices included in processing unit 110, more or fewer processing devices may be used. For example, in some embodiments, a single processing device may be used to accomplish the tasks of applications processor 180 and image processor 190. In other embodiments, these tasks may be performed by more than two processing devices.

[0109] Processing unit 110 may comprise various types of devices. For example, processing unit 110 may include various devices, such as a controller, an image preprocessor, a central processing unit (CPU), support circuits, digital signal processors, integrated circuits, memory, or any other types of

IPR2025-01034
Tesla EX1002 Page 1682

devices for image processing and analysis. The image preprocessor may include a video processor for capturing, digitizing and processing the imagery from the image sensors. The CPU may comprise any number of microcontrollers or microprocessors. The support circuits may be any number of circuits generally well known in the art, including cache, power supply, clock and input-output circuits. The memory may store software that, when executed by the processor, controls the operation of the system. The memory may include databases and image processing software. The memory may comprise any number of random access memories, read only memories, flash memories, disk drives, optical storage, tape storage, removable storage and other types of storage. In one instance, the memory may be separate from the processing unit 110. In another instance, the memory may be integrated into the processing unit 110.

[0110] Each memory 140, 150 may include software instructions that when executed by a processor (e.g., applications processor 180 and/or image processor 190), may control operation of various aspects of system 100. These memory units may include various databases and image processing software. The memory units may include random access memory, read only memory, flash memory, disk drives, optical storage, tape storage, removable storage and/or any other types of storage. In some embodiments, memory units 140, 150 may be separate from the applications processor 180 and/or image processor 190. In other embodiments, these memory units may be integrated into applications processor 180 and/or image processor 190.

[0111] Position sensor 130 may include any type of device suitable for determining a location associated with at least one component of system 100. In some embodiments, position sensor 130 may include a GPS receiver. Such receivers can determine a user position and velocity by processing signals broadcasted by global positioning system satellites. Position information from position sensor 130 may be made available to applications processor 180 and/or image processor 190.

[0112] User interface 170 may include any device suitable for providing information to or for receiving inputs from one or more users of system 100. In some embodiments, user interface 170 may include user input devices, including, for example, a touchscreen, microphone, keyboard, pointer devices, track wheels, cameras, knobs, buttons, etc. With such input devices, a user may be able to provide information inputs or commands to system 100 by typing instructions or information, providing voice commands, selecting menu options on a screen using buttons, pointers, or eye-tracking capabilities, or through any other suitable techniques for communicating information to system 100.

[0113] User interface 170 may be equipped with one or more processing devices configured to provide and receive information to or from a user and process that information for use by, for example, applications processor 180. In some embodiments, such processing devices may execute instructions for recognizing and tracking eye movements, receiving and interpreting voice commands, recognizing and interpreting touches and/or gestures made on a touchscreen, responding to keyboard entries or menu selections, etc. In some embodiments, user interface 170 may include a display, speaker, tactile device, and/or any other devices for providing output information to a user.

IPR2025-01034
Tesla EX1002 Page 1683

[0114] Map database 160 may include any type of database for storing map data useful to system 100. In some embodiments, map database 160 may include data relating to the position, in a reference coordinate system, of various items, including roads, water features, geographic features, businesses, points of interest, restaurants, gas stations, etc. Map database 160 may store not only the locations of such items, but also descriptors relating to those items, including, for example, names associated with any of the stored features. In some embodiments, map database 160 may be physically located with other components of system 100. Alternatively or additionally, map database 160 or a portion thereof may be located remotely with respect to other components of system 100 (e.g., processing unit 110). In such embodiments, information from map database 160 may be downloaded over a wired or wireless data connection to a network (e.g., over a cellular network and/or the Internet, etc.).

[0115] Image capture devices 122, 124, and 126 may each include any type of device suitable for capturing at least one image from an environment. Moreover, any number of image capture devices may be used to acquire images for input to the image processor. Some embodiments may include only a single image capture device, while other embodiments may include two, three, or even four or more image capture devices. Image capture devices 122, 124, and 126 will be further described with reference to FIGS. 2B-2E, below.

[0116] System 100, or various components thereof, may be incorporated into various different platforms. In some embodiments, system 100 may be included on a vehicle 200, as shown in FIG. 2A. For example, vehicle 200 may be equipped with a processing unit 110 and any of the other components of system 100, as described above relative to FIG. 1. While in some embodiments vehicle 200 may be equipped with only a single image capture device (e.g., camera), in other embodiments, such as those discussed in connection with FIGS. 2B-2E, multiple image capture devices may be used. For example, either of image capture devices 122 and 124 of vehicle 200, as shown in FIG. 2A, may be part of an ADAS (Advanced Driver Assistance Systems) imaging set.

[0117] The image capture devices included on vehicle 200 as part of the image acquisition unit 120 may be positioned at any suitable location. In some embodiments, as shown in FIGS. 2A-2E and 3A-3C, image capture device 122 may be located in the vicinity of the rearview mirror. This position may provide a line of sight similar to that of the driver of vehicle 200, which may aid in determining what is and is not visible to the driver. Image capture device 122 may be positioned at any location near the rearview mirror, but placing image capture device 122 on the driver side of the mirror may further aid in obtaining images representative of the driver's field of view and/or line of sight.

[0118] Other locations for the image capture devices of image acquisition unit 120 may also be used. For example, image capture device 124 may be located on or in a bumper of vehicle 200. Such a location may be especially suitable for image capture devices having a wide field of view. The line of sight of bumper-located image capture devices can be different from that of the driver and, therefore, the bumper image capture device and driver may not always see the same objects. The image capture devices (e.g., image capture devices 122, 124, and 126) may also be located in other locations. For example, the image capture devices may be located on or in one or both of the side mirrors of vehicle 200, on the roof

IPR2025-01034
Tesla EX1002 Page 1684

of vehicle 200, on the hood of vehicle 200, on the trunk of vehicle 200, on the sides of vehicle 200, mounted on, positioned behind, or positioned in front of any of the windows of vehicle 200, and mounted in or near light figures on the front and/or back of vehicle 200, etc.

[0119] In addition to image capture devices, vehicle 200 may include various other components of system 100. For example, processing unit 110 may be included on vehicle 200 either integrated with or separate from an engine control unit (ECU) of the vehicle. Vehicle 200 may also be equipped with a position sensor 130, such as a GPS receiver and may also include a map database 160 and memory units 140 and 150.

[0120] FIG. 2A is a diagrammatic side view representation of an exemplary vehicle imaging system consistent with the disclosed embodiments. FIG. 2B is a diagrammatic top view illustration of the embodiment shown in FIG. 2A. As illustrated in FIG. 2B, the disclosed embodiments may include a vehicle 200 including in its body a system 100 with a first image capture device 122 positioned in the vicinity of the rearview mirror and/or near the driver of vehicle 200, a second image capture device 124 positioned on or in a bumper region (e.g., one of bumper regions 210) of vehicle 200, and a processing unit 110.

[0121] As illustrated in FIG. 2C, image capture devices 122 and 124 may both be positioned in the vicinity of the rearview mirror and/or near the driver of vehicle 200. Additionally, while two image capture devices 122 and 124 are shown in FIGS. 2B and 2C, it should be understood that other embodiments may include more than two image capture devices. For example, in the embodiments shown in FIGS. 2D and 2E, first, second, and third image capture devices 122, 124, and 126, are included in the system 100 of vehicle 200.

[0122] As illustrated in FIG. 2D, image capture device 122 may be positioned in the vicinity of the rearview mirror and/or near the driver of vehicle 200, and image capture devices 124 and 126 may be positioned on or in a bumper region (e.g., one of bumper regions 210) of vehicle 200. And as shown in FIG. 2E, image capture devices 122, 124, and 126 may be positioned in the vicinity of the rearview mirror and/or near the driver seat of vehicle 200. The disclosed embodiments are not limited to any particular number and configuration of the image capture devices, and the image capture devices may be positioned in any appropriate location within and/or on vehicle 200.

[0123] It is to be understood that the disclosed embodiments are not limited to vehicles and could be applied in other contexts. It is also to be understood that disclosed embodiments are not limited to a particular type of vehicle 200 and may be applicable to all types of vehicles including automobiles, trucks, trailers, and other types of vehicles.

[0124] The first image capture device 122 may include any suitable type of image capture device. Image capture device 122 may include an optical axis. In one instance, the image capture device 122 may include an Aptina M9V024 WVGA sensor with a global shutter. In other embodiments, image capture device 122 may provide a resolution of 1280x960 pixels and may include a rolling shutter. Image capture device 122 may include various optical elements. In some embodiments one or more lenses may be included, for example, to provide a desired focal length and field of view for the image capture device.

IPR2025-01034
Tesla EX1002 Page 1685

In some embodiments, image capture device 122 may be associated with a 6mm lens or a 12mm lens. In some embodiments, image capture device 122 may be configured to capture images having a desired field-of-view (FOV) 202, as illustrated in FIG. 2D. For example, image capture device 122 may be configured to have a regular FOV, such as within a range of 40 degrees to 56 degrees, including a 46 degree FOV, 50 degree FOV, 52 degree FOV, or greater. Alternatively, image capture device 122 may be configured to have a narrow FOV in the range of 23 to 40 degrees, such as a 28 degree FOV or 36 degree FOV. In addition, image capture device 122 may be configured to have a wide FOV in the range of 100 to 180 degrees. In some embodiments, image capture device 122 may include a wide angle bumper camera or one with up to a 180 degree FOV.

[0125] The first image capture device 122 may acquire a plurality of first images relative to a scene associated with the vehicle 200. Each of the plurality of first images may be acquired as a series of image scan lines, which may be captured using a rolling shutter. Each scan line may include a plurality of pixels.

[0126] The first image capture device 122 may have a scan rate associated with acquisition of each of the first series of image scan lines. The scan rate may refer to a rate at which an image sensor can acquire image data associated with each pixel included in a particular scan line.

[0127] Image capture devices 122, 124, and 126 may contain any suitable type and number of image sensors, including CCD sensors or CMOS sensors, for example. In one embodiment, a CMOS image sensor may be employed along with a rolling shutter, such that each pixel in a row is read one at a time, and scanning of the rows proceeds on a row-by-row basis until an entire image frame has been captured. In some embodiments, the rows may be captured sequentially from top to bottom relative to the frame.

[0128] The use of a rolling shutter may result in pixels in different rows being exposed and captured at different times, which may cause skew and other image artifacts in the captured image frame. On the other hand, when the image capture device 122 is configured to operate with a global or synchronous shutter, all of the pixels may be exposed for the same amount of time and during a common exposure period. As a result, the image data in a frame collected from a system employing a global shutter represents a snapshot of the entire FOV (such as FOV 202) at a particular time. In contrast, in a rolling shutter application, each row in a frame is exposed and data is capture at different times. Thus, moving objects may appear distorted in an image capture device having a rolling shutter. This phenomenon will be described in greater detail below.

[0129] The second image capture device 124 and the third image capturing device 126 may be any type of image capture device. Like the first image capture device 122, each of image capture devices 124 and 126 may include an optical axis. In one embodiment, each of image capture devices 124 and 126 may include an Aptina M9V024 WVGA sensor with a global shutter. Alternatively, each of image capture devices 124 and 126 may include a rolling shutter. Like image capture device 122, image capture devices 124 and 126 may be configured to include various lenses and optical elements. In some embodiments, lenses associated with image capture devices 124 and 126 may provide FOVs (such as

IPR2025-01034
Tesla EX1002 Page 1686

FOVs 204 and 206) that are the same as, or narrower than, a FOV (such as FOV 202) associated with image capture device 122. For example, image capture devices 124 and 126 may have FOVs of 40 degrees, 30 degrees, 26 degrees, 23 degrees, 20 degrees, or less.

[0130] Image capture devices 124 and 126 may acquire a plurality of second and third images relative to a scene associated with the vehicle 200. Each of the plurality of second and third images may be acquired as a second and third series of image scan lines, which may be captured using a rolling shutter. Each scan line or row may have a plurality of pixels. Image capture devices 124 and 126 may have second and third scan rates associated with acquisition of each of image scan lines included in the second and third series.

[0131] Each image capture device 122, 124, and 126 may be positioned at any suitable position and orientation relative to vehicle 200. The relative positioning of the image capture devices 122, 124, and 126 may be selected to aid in fusing together the information acquired from the image capture devices. For example, in some embodiments, a FOV (such as FOV 204) associated with image capture device 124 may overlap partially or fully with a FOV (such as FOV 202) associated with image capture device 122 and a FOV (such as FOV 206) associated with image capture device 126.

[0132] Image capture devices 122, 124, and 126 may be located on vehicle 200 at any suitable relative heights. In one instance, there may be a height difference between the image capture devices 122, 124, and 126, which may provide sufficient parallax information to enable stereo analysis. For example, as shown in FIG. 2A, the two image capture devices 122 and 124 are at different heights. There may also be a lateral displacement difference between image capture devices 122, 124, and 126, giving additional parallax information for stereo analysis by processing unit 110, for example. The difference in the lateral displacement may be denoted by d_x, as shown in FIGS. 2C and 2D. In some embodiments, fore or aft displacement (e.g., range displacement) may exist between image capture devices 122, 124, and 126. For example, image capture device 122 may be located 0.5 to 2 meters or more behind image capture device 124 and/or image capture device 126. This type of displacement may enable one of the image capture devices to cover potential blind spots of the other image capture device(s).

[0133] Image capture devices 122 may have any suitable resolution capability (e.g., number of pixels associated with the image sensor), and the resolution of the image sensor(s) associated with the image capture device 122 may be higher, lower, or the same as the resolution of the image sensor(s) associated with image capture devices 124 and 126. In some embodiments, the image sensor(s) associated with image capture device 122 and/or image capture devices 124 and 126 may have a resolution of 640 x 480, 1024 x 768, 1280 x 960, or any other suitable resolution.

[0134] The frame rate (e.g., the rate at which an image capture device acquires a set of pixel data of one image frame before moving on to capture pixel data associated with the next image frame) may be controllable. The frame rate associated with image capture device 122 may be higher, lower, or the same as the frame rate associated with image capture devices 124 and 126. The frame rate associated with image capture devices 122, 124, and 126 may depend on a variety of factors that may affect the timing of the frame rate. For example, one or more of image capture devices 122, 124, and 126 may include a

IPR2025-01034
Tesla EX1002 Page 1687

selectable pixel delay period imposed before or after acquisition of image data associated with one or more pixels of an image sensor in image capture device 122, 124, and/or 126. Generally, image data corresponding to each pixel may be acquired according to a clock rate for the device (e.g., one pixel per clock cycle). Additionally, in embodiments including a rolling shutter, one or more of image capture devices 122, 124, and 126 may include a selectable horizontal blanking period imposed before or after acquisition of image data associated with a row of pixels of an image sensor in image capture device 122, 124, and/or 126. Further, one or more of image capture devices 122, 124, and/or 126 may include a selectable vertical blanking period imposed before or after acquisition of image data associated with an image frame of image capture device 122, 124, and 126.

[0135] These timing controls may enable synchronization of frame rates associated with image capture devices 122, 124, and 126, even where the line scan rates of each are different. Additionally, as will be discussed in greater detail below, these selectable timing controls, among other factors (e.g., image sensor resolution, maximum line scan rates, etc.) may enable synchronization of image capture from an area where the FOV of image capture device 122 overlaps with one or more FOVs of image capture devices 124 and 126, even where the field of view of image capture device 122 is different from the FOVs of image capture devices 124 and 126.

[0136] Frame rate timing in image capture device 122, 124, and 126 may depend on the resolution of the associated image sensors. For example, assuming similar line scan rates for both devices, if one device includes an image sensor having a resolution of 640 x 480 and another device includes an image sensor with a resolution of 1280 x 960, then more time will be required to acquire a frame of image data from the sensor having the higher resolution.

[0137] Another factor that may affect the timing of image data acquisition in image capture devices 122, 124, and 126 is the maximum line scan rate. For example, acquisition of a row of image data from an image sensor included in image capture device 122, 124, and 126 will require some minimum amount of time. Assuming no pixel delay periods are added, this minimum amount of time for acquisition of a row of image data will be related to the maximum line scan rate for a particular device. Devices that offer higher maximum line scan rates have the potential to provide higher frame rates than devices with lower maximum line scan rates. In some embodiments, one or more of image capture devices 124 and 126 may have a maximum line scan rate that is higher than a maximum line scan rate associated with image capture device 122. In some embodiments, the maximum line scan rate of image capture device 124 and/or 126 may be 1.25, 1.5, 1.75, or 2 times or more than a maximum line scan rate of image capture device 122.

[0138] In another embodiment, image capture devices 122, 124, and 126 may have the same maximum line scan rate, but image capture device 122 may be operated at a scan rate less than or equal to its maximum scan rate. The system may be configured such that one or more of image capture devices 124 and 126 operate at a line scan rate that is equal to the line scan rate of image capture device 122. In other instances, the system may be configured such that the line scan rate of image capture device 124

IPR2025-01034
Tesla EX1002 Page 1688

and/or image capture device 126 may be 1.25, 1.5, 1.75, or 2 times or more than the line scan rate of image capture device 122.

[0139] In some embodiments, image capture devices 122, 124, and 126 may be asymmetric. That is, they may include cameras having different fields of view (FOV) and focal lengths. The fields of view of image capture devices 122, 124, and 126 may include any desired area relative to an environment of vehicle 200, for example. In some embodiments, one or more of image capture devices 122, 124, and 126 may be configured to acquire image data from an environment in front of vehicle 200, behind vehicle 200, to the sides of vehicle 200, or combinations thereof.

[0140] Further, the focal length associated with each image capture device 122, 124, and/or 126 may be selectable (e.g., by inclusion of appropriate lenses etc.) such that each device acquires images of objects at a desired distance range relative to vehicle 200. For example, in some embodiments image capture devices 122, 124, and 126 may acquire images of close-up objects within a few meters from the vehicle. Image capture devices 122, 124, and 126 may also be configured to acquire images of objects at ranges more distant from the vehicle (e.g., 25 m, 50 m, 100 m, 150 m, or more). Further, the focal lengths of image capture devices 122, 124, and 126 may be selected such that one image capture device (e.g., image capture device 122) can acquire images of objects relatively close to the vehicle (e.g., within 10 m or within 20 m) while the other image capture devices (e.g., image capture devices 124 and 126) can acquire images of more distant objects (e.g., greater than 20 m, 50 m, 100 m, 150 m, etc.) from vehicle 200.

[0141] According to some embodiments, the FOV of one or more image capture devices 122, 124, and 126 may have a wide angle. For example, it may be advantageous to have a FOV of 140 degrees, especially for image capture devices 122, 124, and 126 that may be used to capture images of the area in the vicinity of vehicle 200. For example, image capture device 122 may be used to capture images of the area to the right or left of vehicle 200 and, in such embodiments, it may be desirable for image capture device 122 to have a wide FOV (e.g., at least 140 degrees).

[0142] The field of view associated with each of image capture devices 122, 124, and 126 may depend on the respective focal lengths. For example, as the focal length increases, the corresponding field of view decreases.

[0143] Image capture devices 122, 124, and 126 may be configured to have any suitable fields of view. In one particular example, image capture device 122 may have a horizontal FOV of 46 degrees, image capture device 124 may have a horizontal FOV of 23 degrees, and image capture device 126 may have a horizontal FOV in between 23 and 46 degrees. In another instance, image capture device 122 may have a horizontal FOV of 52 degrees, image capture device 124 may have a horizontal FOV of 26 degrees, and image capture device 126 may have a horizontal FOV in between 26 and 52 degrees. In some embodiments, a ratio of the FOV of image capture device 122 to the FOVs of image capture device 124 and/or image capture device 126 may vary from 1.5 to 2.0. In other embodiments, this ratio may vary between 1.25 and 2.25.

IPR2025-01034
Tesla EX1002 Page 1689

[0144] System 100 may be configured so that a field of view of image capture device 122 overlaps, at least partially or fully, with a field of view of image capture device 124 and/or image capture device 126. In some embodiments, system 100 may be configured such that the fields of view of image capture devices 124 and 126, for example, fall within (e.g., are narrower than) and share a common center with the field of view of image capture device 122. In other embodiments, the image capture devices 122, 124, and 126 may capture adjacent FOVs or may have partial overlap in their FOVs. In some embodiments, the fields of view of image capture devices 122, 124, and 126 may be aligned such that a center of the narrower FOV image capture devices 124 and/or 126 may be located in a lower half of the field of view of the wider FOV device 122.

[0145] FIG. 2F is a diagrammatic representation of exemplary vehicle control systems, consistent with the disclosed embodiments. As indicated in FIG. 2F, vehicle 200 may include throttling system 220, braking system 230, and steering system 240. System 100 may provide inputs (e.g., control signals) to one or more of throttling system 220, braking system 230, and steering system 240 over one or more data links (e.g., any wired and/or wireless link or links for transmitting data). For example, based on analysis of images acquired by image capture devices 122, 124, and/or 126, system 100 may provide control signals to one or more of throttling system 220, braking system 230, and steering system 240 to navigate vehicle 200 (e.g., by causing an acceleration, a turn, a lane shift, etc.). Further, system 100 may receive inputs from one or more of throttling system 220, braking system 230, and steering system 24 indicating operating conditions of vehicle 200 (e.g., speed, whether vehicle 200 is braking and/or turning, etc.). Further details are provided in connection with FIGS. 4-7, below.

[0146] As shown in FIG. 3A, vehicle 200 may also include a user interface 170 for interacting with a driver or a passenger of vehicle 200. For example, user interface 170 in a vehicle application may include a touch screen 320, knobs 330, buttons 340, and a microphone 350. A driver or passenger of vehicle 200 may also use handles (e.g., located on or near the steering column of vehicle 200 including, for example, turn signal handles), buttons (e.g., located on the steering wheel of vehicle 200), and the like, to interact with system 100. In some embodiments, microphone 350 may be positioned adjacent to a rearview mirror 310. Similarly, in some embodiments, image capture device 122 may be located near rearview mirror 310. In some embodiments, user interface 170 may also include one or more speakers 360 (e.g., speakers of a vehicle audio system). For example, system 100 may provide various notifications (e.g., alerts) via speakers 360.

[0147] FIGS. 3B-3D are illustrations of an exemplary camera mount 370 configured to be positioned behind a rearview mirror (e.g., rearview mirror 310) and against a vehicle windshield, consistent with disclosed embodiments. As shown in FIG. 3B, camera mount 370 may include image capture devices 122, 124, and 126. Image capture devices 124 and 126 may be positioned behind a glare shield 380, which may be flush against the vehicle windshield and include a composition of film and/or anti-reflective materials. For example, glare shield 380 may be positioned such that it aligns against a vehicle windshield having a matching slope. In some embodiments, each of image capture devices 122, 124, and 126 may be positioned behind glare shield 380, as depicted, for example, in FIG. 3D. The

IPR2025-01034
Tesla EX1002 Page 1690

disclosed embodiments are not limited to any particular configuration of image capture devices 122, 124, and 126, camera mount 370, and glare shield 380. FIG. 3C is an illustration of camera mount 370 shown in FIG. 3B from a front perspective.

[0148] As will be appreciated by a person skilled in the art having the benefit of this disclosure, numerous variations and/or modifications may be made to the foregoing disclosed embodiments. For example, not all components are essential for the operation of system 100. Further, any component may be located in any appropriate part of system 100 and the components may be rearranged into a variety of configurations while providing the functionality of the disclosed embodiments. Therefore, the foregoing configurations are examples and, regardless of the configurations discussed above, system 100 can provide a wide range of functionality to analyze the surroundings of vehicle 200 and navigate vehicle 200 in response to the analysis.

[0149] As discussed below in further detail and consistent with various disclosed embodiments, system 100 may provide a variety of features related to autonomous driving and/or driver assist technology. For example, system 100 may analyze image data, position data (e.g., GPS location information), map data, speed data, and/or data from sensors included in vehicle 200. System 100 may collect the data for analysis from, for example, image acquisition unit 120, position sensor 130, and other sensors. Further, system 100 may analyze the collected data to determine whether or not vehicle 200 should take a certain action, and then automatically take the determined action without human intervention. For example, when vehicle 200 navigates without human intervention, system 100 may automatically control the braking, acceleration, and/or steering of vehicle 200 (e.g., by sending control signals to one or more of throttling system 220, braking system 230, and steering system 240). Further, system 100 may analyze the collected data and issue warnings and/or alerts to vehicle occupants based on the analysis of the collected data.

[0150] Further, consistent with disclosed embodiments, the functionality provided by system 100 may cause vehicle 200 to take different actions to navigate vehicle 200 within a lane and/or relative to other vehicles and/or objects. For example, system 100 may adjust the positioning of vehicle 200 relative to a lane within which vehicle 200 is traveling and/or relative to objects positioned near vehicle 200, select a particular lane for vehicle 200 to use while traveling, and take action in response to an encroaching vehicle, such as a vehicle attempting to move into the lane within which vehicle 200 is traveling. Additionally, system 100 may control the speed of vehicle 200 in different scenarios, such as when vehicle 200 is making a turn. System 100 may further cause vehicle 200 to mimic the actions of a leading vehicle or monitor a target vehicle and navigate vehicle 200 so that it passes the target vehicle. Additional details regarding the various embodiments that are provided by system 100 are provided below.

[0151] Forward-Facing Multi-Imaging System

[0152] As discussed above, system 100 may provide drive assist functionality that uses a multi-camera system. The multi-camera system may use one or more cameras facing in the forward direction of a vehicle. In other embodiments, the multi-camera system may include one or more cameras facing to the

IPR2025-01034
Tesla EX1002 Page 1691

side of a vehicle or to the rear of the vehicle. In one embodiment, for example, system 100 may use a two-camera imaging system, where a first camera and a second camera (e.g., image capture devices 122 and 124) may be positioned at the front and/or the sides of a vehicle (e.g., vehicle 200). The first camera may have a field of view that is greater than, less than, or partially overlapping with, the field of view of the second camera. In addition, the first camera may be connected to a first image processor to perform monocular image analysis of images provided by the first camera, and the second camera may be connected to a second image processor to perform monocular image analysis of images provided by the second camera. The outputs (e.g., processed information) of the first and second image processors may be combined. In some embodiments, the second image processor may receive images from both the first camera and second camera to perform stereo analysis. In another embodiment, system 100 may use a three-camera imaging system where each of the cameras has a different field of view. Such a system may, therefore, make decisions based on information derived from objects located at varying distances both forward and to the sides of the vehicle. References to monocular image analysis may refer to instances where image analysis is performed based on images captured from a single point of view (e.g., from a single camera). Stereo image analysis may refer to instances where image analysis is performed based on two or more images captured with one or more variations of an image capture parameter. For example, captured images suitable for performing stereo image analysis may include images captured: from two or more different positions, from different fields of view, using different focal lengths, along with parallax information, etc.

[0153] For example, in one embodiment, system 100 may implement a three camera configuration using image capture devices 122-126. In such a configuration, image capture device 122 may provide a narrow field of view (e.g., 34 degrees, or other values selected from a range of about 20 to 45 degrees, etc.), image capture device 124 may provide a wide field of view (e.g., 150 degrees or other values selected from a range of about 100 to about 180 degrees), and image capture device 126 may provide an intermediate field of view (e.g., 46 degrees or other values selected from a range of about 35 to about 60 degrees). In some embodiments, image capture device 126 may act as a main or primary camera. Image capture devices 122-126 may be positioned behind rearview mirror 310 and positioned substantially side-by-side (e.g., 6 cm apart). Further, in some embodiments, as discussed above, one or more of image capture devices 122-126 may be mounted behind glare shield 380 that is flush with the windshield of vehicle 200. Such shielding may act to minimize the impact of any reflections from inside the car on image capture devices 122-126.

[0154] In another embodiment, as discussed above in connection with FIGS. 3B and 3C, the wide field of view camera (e.g., image capture device 124 in the above example) may be mounted lower than the narrow and main field of view cameras (e.g., image devices 122 and 126 in the above example). This configuration may provide a free line of sight from the wide field of view camera. To reduce reflections, the cameras may be mounted close to the windshield of vehicle 200, and may include polarizers on the cameras to damp reflected light.

IPR2025-01034
Tesla EX1002 Page 1692

[0155] A three camera system may provide certain performance characteristics. For example, some embodiments may include an ability to validate the detection of objects by one camera based on detection results from another camera. In the three camera configuration discussed above, processing unit 110 may include, for example, three processing devices (e.g., three EyeQ series of processor chips, as discussed above), with each processing device dedicated to processing images captured by one or more of image capture devices 122-126.

[0156] In a three camera system, a first processing device may receive images from both the main camera and the narrow field of view camera, and perform vision processing of the narrow FOV camera to, for example, detect other vehicles, pedestrians, lane marks, traffic signs, traffic lights, and other road objects. Further, the first processing device may calculate a disparity of pixels between the images from the main camera and the narrow camera and create a 3D reconstruction of the environment of vehicle 200. The first processing device may then combine the 3D reconstruction with 3D map data or with 3D information calculated based on information from another camera.

[0157] The second processing device may receive images from main camera and perform vision processing to detect other vehicles, pedestrians, lane marks, traffic signs, traffic lights, and other road objects. Additionally, the second processing device may calculate a camera displacement and, based on the displacement, calculate a disparity of pixels between successive images and create a 3D reconstruction of the scene (e.g., a structure from motion). The second processing device may send the structure from motion based 3D reconstruction to the first processing device to be combined with the stereo 3D images.

[0158] The third processing device may receive images from the wide FOV camera and process the images to detect vehicles, pedestrians, lane marks, traffic signs, traffic lights, and other road objects. The third processing device may further execute additional processing instructions to analyze images to identify objects moving in the image, such as vehicles changing lanes, pedestrians, etc.

[0159] In some embodiments, having streams of image-based information captured and processed independently may provide an opportunity for providing redundancy in the system. Such redundancy may include, for example, using a first image capture device and the images processed from that device to validate and/or supplement information obtained by capturing and processing image information from at least a second image capture device.

[0160] In some embodiments, system 100 may use two image capture devices (e.g., image capture devices 122 and 124) in providing navigation assistance for vehicle 200 and use a third image capture device (e.g., image capture device 126) to provide redundancy and validate the analysis of data received from the other two image capture devices. For example, in such a configuration, image capture devices 122 and 124 may provide images for stereo analysis by system 100 for navigating vehicle 200, while image capture device 126 may provide images for monocular analysis by system 100 to provide redundancy and validation of information obtained based on images captured from image capture device 122 and/or image capture device 124. That is, image capture device 126 (and a corresponding processing device) may be considered to provide a redundant sub-system for providing a check on the analysis

IPR2025-01034
Tesla EX1002 Page 1693

derived from image capture devices 122 and 124 (e.g., to provide an automatic emergency braking (AEB) system).

[0161] One of skill in the art will recognize that the above camera configurations, camera placements, number of cameras, camera locations, etc., are examples only. These components and others described relative to the overall system may be assembled and used in a variety of different configurations without departing from the scope of the disclosed embodiments. Further details regarding usage of a multi-camera system to provide driver assist and/or autonomous vehicle functionality follow below.

[0162] FIG. 4 is an exemplary functional block diagram of memory 140 and/or 150, which may be stored/programmed with instructions for performing one or more operations consistent with the disclosed embodiments. Although the following refers to memory 140, one of skill in the art will recognize that instructions may be stored in memory 140 and/or 150.

[0163] As shown in FIG. 4, memory 140 may store a monocular image analysis module 402, a stereo image analysis module 404, a velocity and acceleration module 406, and a navigational response module 408. The disclosed embodiments are not limited to any particular configuration of memory 140. Further, application processor 180 and/or image processor 190 may execute the instructions stored in any of modules 402-408 included in memory 140. One of skill in the art will understand that references in the following discussions to processing unit 110 may refer to application processor 180 and image processor 190 individually or collectively. Accordingly, steps of any of the following processes may be performed by one or more processing devices.

[0164] In one embodiment, monocular image analysis module 402 may store instructions (such as computer vision software) which, when executed by processing unit 110, performs monocular image analysis of a set of images acquired by one of image capture devices 122, 124, and 126. In some embodiments, processing unit 110 may combine information from a set of images with additional sensory information (e.g., information from radar) to perform the monocular image analysis. As described in connection with FIGS. 5A-5D below, monocular image analysis module 402 may include instructions for detecting a set of features within the set of images, such as lane markings, vehicles, pedestrians, road signs, highway exit ramps, traffic lights, hazardous objects, and any other feature associated with an environment of a vehicle. Based on the analysis, system 100 (e.g., via processing unit 110) may cause one or more navigational responses in vehicle 200, such as a turn, a lane shift, a change in acceleration, and the like, as discussed below in connection with navigational response module 408.

[0165] In one embodiment, stereo image analysis module 404 may store instructions (such as computer vision software) which, when executed by processing unit 110, performs stereo image analysis of first and second sets of images acquired by a combination of image capture devices selected from any of image capture devices 122, 124, and 126. In some embodiments, processing unit 110 may combine information from the first and second sets of images with additional sensory information (e.g., information from radar) to perform the stereo image analysis. For example, stereo image analysis module 404 may include instructions for performing stereo image analysis based on a first set of images acquired

IPR2025-01034
Tesla EX1002 Page 1694

by image capture device 124 and a second set of images acquired by image capture device 126. As described in connection with FIG. 6 below, stereo image analysis module 404 may include instructions for detecting a set of features within the first and second sets of images, such as lane markings, vehicles, pedestrians, road signs, highway exit ramps, traffic lights, hazardous objects, and the like. Based on the analysis, processing unit 110 may cause one or more navigational responses in vehicle 200, such as a turn, a lane shift, a change in acceleration, and the like, as discussed below in connection with navigational response module 408.

[0166] In one embodiment, velocity and acceleration module 406 may store software configured to analyze data received from one or more computing and electromechanical devices in vehicle 200 that are configured to cause a change in velocity and/or acceleration of vehicle 200. For example, processing unit 110 may execute instructions associated with velocity and acceleration module 406 to calculate a target speed for vehicle 200 based on data derived from execution of monocular image analysis module 402 and/or stereo image analysis module 404. Such data may include, for example, a target position, velocity, and/or acceleration, the position and/or speed of vehicle 200 relative to a nearby vehicle, pedestrian, or road object, position information for vehicle 200 relative to lane markings of the road, and the like. In addition, processing unit 110 may calculate a target speed for vehicle 200 based on sensory input (e.g., information from radar) and input from other systems of vehicle 200, such as throttling system 220, braking system 230, and/or steering system 240 of vehicle 200. Based on the calculated target speed, processing unit 110 may transmit electronic signals to throttling system 220, braking system 230, and/or steering system 240 of vehicle 200 to trigger a change in velocity and/or acceleration by, for example, physically depressing the brake or easing up off the accelerator of vehicle 200.

[0167] In one embodiment, navigational response module 408 may store software executable by processing unit 110 to determine a desired navigational response based on data derived from execution of monocular image analysis module 402 and/or stereo image analysis module 404. Such data may include position and speed information associated with nearby vehicles, pedestrians, and road objects, target position information for vehicle 200, and the like. Additionally, in some embodiments, the navigational response may be based (partially or fully) on map data, a predetermined position of vehicle 200, and/or a relative velocity or a relative acceleration between vehicle 200 and one or more objects detected from execution of monocular image analysis module 402 and/or stereo image analysis module 404. Navigational response module 408 may also determine a desired navigational response based on sensory input (e.g., information from radar) and inputs from other systems of vehicle 200, such as throttling system 220, braking system 230, and steering system 240 of vehicle 200. Based on the desired navigational response, processing unit 110 may transmit electronic signals to throttling system 220, braking system 230, and steering system 240 of vehicle 200 to trigger a desired navigational response by, for example, turning the steering wheel of vehicle 200 to achieve a rotation of a predetermined angle. In some embodiments, processing unit 110 may use the output of navigational response module 408 (e.g., the desired navigational response) as an input to execution of velocity and acceleration module 406 for calculating a change in speed of vehicle 200.

IPR2025-01034
Tesla EX1002 Page 1695

[0168] FIG. 5A is a flowchart showing an exemplary process 500A for causing one or more navigational responses based on monocular image analysis, consistent with disclosed embodiments. At step 510, processing unit 110 may receive a plurality of images via data interface 128 between processing unit 110 and image acquisition unit 120. For instance, a camera included in image acquisition unit 120 (such as image capture device 122 having field of view 202) may capture a plurality of images of an area forward of vehicle 200 (or to the sides or rear of a vehicle, for example) and transmit them over a data connection (e.g., digital, wired, USB, wireless, Bluetooth, etc.) to processing unit 110. Processing unit 110 may execute monocular image analysis module 402 to analyze the plurality of images at step 520, as described in further detail in connection with FIGS. 5B-5D below. By performing the analysis, processing unit 110 may detect a set of features within the set of images, such as lane markings, vehicles, pedestrians, road signs, highway exit ramps, traffic lights, and the like.

[0169] Processing unit 110 may also execute monocular image analysis module 402 to detect various road hazards at step 520, such as, for example, parts of a truck tire, fallen road signs, loose cargo, small animals, and the like. Road hazards may vary in structure, shape, size, and color, which may make detection of such hazards more challenging. In some embodiments, processing unit 110 may execute monocular image analysis module 402 to perform multi-frame analysis on the plurality of images to detect road hazards. For example, processing unit 110 may estimate camera motion between consecutive image frames and calculate the disparities in pixels between the frames to construct a 3D-map of the road. Processing unit 110 may then use the 3D-map to detect the road surface, as well as hazards existing above the road surface.

[0170] At step 530, processing unit 110 may execute navigational response module 408 to cause one or more navigational responses in vehicle 200 based on the analysis performed at step 520 and the techniques as described above in connection with FIG. 4. Navigational responses may include, for example, a turn, a lane shift, a change in acceleration, and the like. In some embodiments, processing unit 110 may use data derived from execution of velocity and acceleration module 406 to cause the one or more navigational responses. Additionally, multiple navigational responses may occur simultaneously, in sequence, or any combination thereof. For instance, processing unit 110 may cause vehicle 200 to shift one lane over and then accelerate by, for example, sequentially transmitting control signals to steering system 240 and throttling system 220 of vehicle 200. Alternatively, processing unit 110 may cause vehicle 200 to brake while at the same time shifting lanes by, for example, simultaneously transmitting control signals to braking system 230 and steering system 240 of vehicle 200.

[0171] FIG. 5B is a flowchart showing an exemplary process 500B for detecting one or more vehicles and/or pedestrians in a set of images, consistent with disclosed embodiments. Processing unit 110 may execute monocular image analysis module 402 to implement process 500B. At step 540, processing unit 110 may determine a set of candidate objects representing possible vehicles and/or pedestrians. For example, processing unit 110 may scan one or more images, compare the images to one or more predetermined patterns, and identify within each image possible locations that may contain objects of interest (e.g., vehicles, pedestrians, or portions thereof). The predetermined patterns may be

IPR2025-01034
Tesla EX1002 Page 1696

designed in such a way to achieve a high rate of "false hits" and a low rate of "misses." For example, processing unit 110 may use a low threshold of similarity to predetermined patterns for identifying candidate objects as possible vehicles or pedestrians. Doing so may allow processing unit 110 to reduce the probability of missing (e.g., not identifying) a candidate object representing a vehicle or pedestrian.

[0172] At step 542, processing unit 110 may filter the set of candidate objects to exclude certain candidates (e.g., irrelevant or less relevant objects) based on classification criteria. Such criteria may be derived from various properties associated with object types stored in a database (e.g., a database stored in memory 140). Properties may include object shape, dimensions, texture, position (e.g., relative to vehicle 200), and the like. Thus, processing unit 110 may use one or more sets of criteria to reject false candidates from the set of candidate objects.

[0173] At step 544, processing unit 110 may analyze multiple frames of images to determine whether objects in the set of candidate objects represent vehicles and/or pedestrians. For example, processing unit 110 may track a detected candidate object across consecutive frames and accumulate frame-by-frame data associated with the detected object (e.g., size, position relative to vehicle 200, etc.). Additionally, processing unit 110 may estimate parameters for the detected object and compare the object's frame-by-frame position data to a predicted position.

[0174] At step 546, processing unit 110 may construct a set of measurements for the detected objects. Such measurements may include, for example, position, velocity, and acceleration values (relative to vehicle 200) associated with the detected objects. In some embodiments, processing unit 110 may construct the measurements based on estimation techniques using a series of time-based observations such as Kalman filters or linear quadratic estimation (LQE), and/or based on available modeling data for different object types (e.g., cars, trucks, pedestrians, bicycles, road signs, etc.). The Kalman filters may be based on a measurement of an object's scale, where the scale measurement is proportional to a time to collision (e.g., the amount of time for vehicle 200 to reach the object). Thus, by performing steps 540-546, processing unit 110 may identify vehicles and pedestrians appearing within the set of captured images and derive information (e.g., position, speed, size) associated with the vehicles and pedestrians. Based on the identification and the derived information, processing unit 110 may cause one or more navigational responses in vehicle 200, as described in connection with FIG. 5A, above.

[0175] At step 548, processing unit 110 may perform an optical flow analysis of one or more images to reduce the probabilities of detecting a "false hit" and missing a candidate object that represents a vehicle or pedestrian. The optical flow analysis may refer to, for example, analyzing motion patterns relative to vehicle 200 in the one or more images associated with other vehicles and pedestrians, and that are distinct from road surface motion. Processing unit 110 may calculate the motion of candidate objects by observing the different positions of the objects across multiple image frames, which are captured at different times. Processing unit 110 may use the position and time values as inputs into mathematical models for calculating the motion of the candidate objects. Thus, optical flow analysis may provide another method of detecting vehicles and pedestrians that are nearby vehicle 200. Processing unit 110

IPR2025-01034
Tesla EX1002 Page 1697

may perform optical flow analysis in combination with steps 540-546 to provide redundancy for detecting vehicles and pedestrians and increase the reliability of system 100.

[0176] FIG. 5C is a flowchart showing an exemplary process 500C for detecting road marks and/or lane geometry information in a set of images, consistent with disclosed embodiments. Processing unit 110 may execute monocular image analysis module 402 to implement process 500C. At step 550, processing unit 110 may detect a set of objects by scanning one or more images. To detect segments of lane markings, lane geometry information, and other pertinent road marks, processing unit 110 may filter the set of objects to exclude those determined to be irrelevant (e.g., minor potholes, small rocks, etc.). At step 552, processing unit 110 may group together the segments detected in step 550 belonging to the same road mark or lane mark. Based on the grouping, processing unit 110 may develop a model to represent the detected segments, such as a mathematical model.

[0177] At step 554, processing unit 110 may construct a set of measurements associated with the detected segments. In some embodiments, processing unit 110 may create a projection of the detected segments from the image plane onto the real-world plane. The projection may be characterized using a 3rd-degree polynomial having coefficients corresponding to physical properties such as the position, slope, curvature, and curvature derivative of the detected road. In generating the projection, processing unit 110 may take into account changes in the road surface, as well as pitch and roll rates associated with vehicle 200. In addition, processing unit 110 may model the road elevation by analyzing position and motion cues present on the road surface. Further, processing unit 110 may estimate the pitch and roll rates associated with vehicle 200 by tracking a set of feature points in the one or more images.

[0178] At step 556, processing unit 110 may perform multi-frame analysis by, for example, tracking the detected segments across consecutive image frames and accumulating frame-by-frame data associated with detected segments. As processing unit 110 performs multi-frame analysis, the set of measurements constructed at step 554 may become more reliable and associated with an increasingly higher confidence level. Thus, by performing steps 550-556, processing unit 110 may identify road marks appearing within the set of captured images and derive lane geometry information. Based on the identification and the derived information, processing unit 110 may cause one or more navigational responses in vehicle 200, as described in connection with FIG. 5A, above.

[0179] At step 558, processing unit 110 may consider additional sources of information to further develop a safety model for vehicle 200 in the context of its surroundings. Processing unit 110 may use the safety model to define a context in which system 100 may execute autonomous control of vehicle 200 in a safe manner. To develop the safety model, in some embodiments, processing unit 110 may consider the position and motion of other vehicles, the detected road edges and barriers, and/or general road shape descriptions extracted from map data (such as data from map database 160). By considering additional sources of information, processing unit 110 may provide redundancy for detecting road marks and lane geometry and increase the reliability of system 100.

[0180] FIG. 5D is a flowchart showing an exemplary process 500D for detecting traffic lights in a set of images, consistent with disclosed embodiments. Processing unit 110 may execute monocular

IPR2025-01034
Tesla EX1002 Page 1698

image analysis module 402 to implement process 500D. At step 560, processing unit 110 may scan the set of images and identify objects appearing at locations in the images likely to contain traffic lights. For example, processing unit 110 may filter the identified objects to construct a set of candidate objects, excluding those objects unlikely to correspond to traffic lights. The filtering may be done based on various properties associated with traffic lights, such as shape, dimensions, texture, position (e.g., relative to vehicle 200), and the like. Such properties may be based on multiple examples of traffic lights and traffic control signals and stored in a database. In some embodiments, processing unit 110 may perform multi-frame analysis on the set of candidate objects reflecting possible traffic lights. For example, processing unit 110 may track the candidate objects across consecutive image frames, estimate the real-world position of the candidate objects, and filter out those objects that are moving (which are unlikely to be traffic lights). In some embodiments, processing unit 110 may perform color analysis on the candidate objects and identify the relative position of the detected colors appearing inside possible traffic lights.

[0181] At step 562, processing unit 110 may analyze the geometry of a junction. The analysis may be based on any combination of: (i) the number of lanes detected on either side of vehicle 200, (ii) markings (such as arrow marks) detected on the road, and (iii) descriptions of the junction extracted from map data (such as data from map database 160). Processing unit 110 may conduct the analysis using information derived from execution of monocular analysis module 402. In addition, Processing unit 110 may determine a correspondence between the traffic lights detected at step 560 and the lanes appearing near vehicle 200.

[0182] As vehicle 200 approaches the junction, at step 564, processing unit 110 may update the confidence level associated with the analyzed junction geometry and the detected traffic lights. For instance, the number of traffic lights estimated to appear at the junction as compared with the number actually appearing at the junction may impact the confidence level. Thus, based on the confidence level, processing unit 110 may delegate control to the driver of vehicle 200 in order to improve safety conditions. By performing steps 560-564, processing unit 110 may identify traffic lights appearing within the set of captured images and analyze junction geometry information. Based on the identification and the analysis, processing unit 110 may cause one or more navigational responses in vehicle 200, as described in connection with FIG. 5A, above.

[0183] FIG. 5E is a flowchart showing an exemplary process 500E for causing one or more navigational responses in vehicle 200 based on a vehicle path, consistent with the disclosed embodiments. At step 570, processing unit 110 may construct an initial vehicle path associated with vehicle 200. The vehicle path may be represented using a set of points expressed in coordinates (x, z), and the distance d_i between two points in the set of points may fall in the range of 1 to 5 meters. In one embodiment, processing unit 110 may construct the initial vehicle path using two polynomials, such as left and right road polynomials. Processing unit 110 may calculate the geometric midpoint between the two polynomials and offset each point included in the resultant vehicle path by a predetermined offset (e.g., a smart lane offset), if any (an offset of zero may correspond to travel in the middle of a lane). The offset may be in a direction perpendicular to a segment between any two points in the vehicle path. In another

IPR2025-01034
Tesla EX1002 Page 1699

embodiment, processing unit 110 may use one polynomial and an estimated lane width to offset each point of the vehicle path by half the estimated lane width plus a predetermined offset (e.g., a smart lane offset).

[0184] At step 572, processing unit 110 may update the vehicle path constructed at step 570. Processing unit 110 may reconstruct the vehicle path constructed at step 570 using a higher resolution, such that the distance d_k between two points in the set of points representing the vehicle path is less than the distance d_i described above. For example, the distance d_k may fall in the range of 0.1 to 0.3 meters. Processing unit 110 may reconstruct the vehicle path using a parabolic spline algorithm, which may yield a cumulative distance vector S corresponding to the total length of the vehicle path (i.e., based on the set of points representing the vehicle path).

[0185] At step 574, processing unit 110 may determine a look-ahead point (expressed in coordinates as (x_l, z_l)) based on the updated vehicle path constructed at step 572. Processing unit 110 may extract the look-ahead point from the cumulative distance vector S, and the look-ahead point may be associated with a look-ahead distance and look-ahead time. The look-ahead distance, which may have a lower bound ranging from 10 to 20 meters, may be calculated as the product of the speed of vehicle 200 and the look-ahead time. For example, as the speed of vehicle 200 decreases, the look-ahead distance may also decrease (e.g., until it reaches the lower bound). The look-ahead time, which may range from 0.5 to 1.5 seconds, may be inversely proportional to the gain of one or more control loops associated with causing a navigational response in vehicle 200, such as the heading error tracking control loop. For example, the gain of the heading error tracking control loop may depend on the bandwidth of a yaw rate loop, a steering actuator loop, car lateral dynamics, and the like. Thus, the higher the gain of the heading error tracking control loop, the lower the look-ahead time.

[0186] At step 576, processing unit 110 may determine a heading error and yaw rate command based on the look-ahead point determined at step 574. Processing unit 110 may determine the heading error by calculating the arctangent of the look-ahead point, e.g., arctan (x_l / z_l). Processing unit 110 may determine the yaw rate command as the product of the heading error and a high-level control gain. The high-level control gain may be equal to: (2 / look-ahead time), if the look-ahead distance is not at the lower bound. Otherwise, the high-level control gain may be equal to: (2 * speed of vehicle 200 / look-ahead distance).

[0187] FIG. 5F is a flowchart showing an exemplary process 500F for determining whether a leading vehicle is changing lanes, consistent with the disclosed embodiments. At step 580, processing unit 110 may determine navigation information associated with a leading vehicle (e.g., a vehicle traveling ahead of vehicle 200). For example, processing unit 110 may determine the position, velocity (e.g., direction and speed), and/or acceleration of the leading vehicle, using the techniques described in connection with FIGS. 5A and 5B, above. Processing unit 110 may also determine one or more road polynomials, a look-ahead point (associated with vehicle 200), and/or a snail trail (e.g., a set of points describing a path taken by the leading vehicle), using the techniques described in connection with FIG. 5E, above.

IPR2025-01034
Tesla EX1002 Page 1700

[0188] At step 582, processing unit 110 may analyze the navigation information determined at step 580. In one embodiment, processing unit 110 may calculate the distance between a snail trail and a road polynomial (e.g., along the trail). If the variance of this distance along the trail exceeds a predetermined threshold (for example, 0.1 to 0.2 meters on a straight road, 0.3 to 0.4 meters on a moderately curvy road, and 0.5 to 0.6 meters on a road with sharp curves), processing unit 110 may determine that the leading vehicle is likely changing lanes. In the case where multiple vehicles are detected traveling ahead of vehicle 200, processing unit 110 may compare the snail trails associated with each vehicle. Based on the comparison, processing unit 110 may determine that a vehicle whose snail trail does not match with the snail trails of the other vehicles is likely changing lanes. Processing unit 110 may additionally compare the curvature of the snail trail (associated with the leading vehicle) with the expected curvature of the road segment in which the leading vehicle is traveling. The expected curvature may be extracted from map data (e.g., data from map database 160), from road polynomials, from other vehicles' snail trails, from prior knowledge about the road, and the like. If the difference in curvature of the snail trail and the expected curvature of the road segment exceeds a predetermined threshold, processing unit 110 may determine that the leading vehicle is likely changing lanes.

[0189] In another embodiment, processing unit 110 may compare the leading vehicle's instantaneous position with the look-ahead point (associated with vehicle 200) over a specific period of time (e.g., 0.5 to 1.5 seconds). If the distance between the leading vehicle's instantaneous position and the look-ahead point varies during the specific period of time, and the cumulative sum of variation exceeds a predetermined threshold (for example, 0.3 to 0.4 meters on a straight road, 0.7 to 0.8 meters on a moderately curvy road, and 1.3 to 1.7 meters on a road with sharp curves), processing unit 110 may determine that the leading vehicle is likely changing lanes. In another embodiment, processing unit 110 may analyze the geometry of the snail trail by comparing the lateral distance traveled along the trail with the expected curvature of the snail trail. The expected radius of curvature may be determined according to the calculation: $(\delta_z^2 + \delta_x^2) / 2 / (\delta_x)$, where δ_x represents the lateral distance traveled and δ_z represents the longitudinal distance traveled. If the difference between the lateral distance traveled and the expected curvature exceeds a predetermined threshold (e.g., 500 to 700 meters), processing unit 110 may determine that the leading vehicle is likely changing lanes. In another embodiment, processing unit 110 may analyze the position of the leading vehicle. If the position of the leading vehicle obscures a road polynomial (e.g., the leading vehicle is overlaid on top of the road polynomial), then processing unit 110 may determine that the leading vehicle is likely changing lanes. In the case where the position of the leading vehicle is such that, another vehicle is detected ahead of the leading vehicle and the snail trails of the two vehicles are not parallel, processing unit 110 may determine that the (closer) leading vehicle is likely changing lanes.

[0190] At step 584, processing unit 110 may determine whether or not leading vehicle 200 is changing lanes based on the analysis performed at step 582. For example, processing unit 110 may make the determination based on a weighted average of the individual analyses performed at step 582. Under such a scheme, for example, a decision by processing unit 110 that the leading vehicle is likely changing

IPR2025-01034
Tesla EX1002 Page 1701

lanes based on a particular type of analysis may be assigned a value of "1" (and "0" to represent a determination that the leading vehicle is not likely changing lanes). Different analyses performed at step 582 may be assigned different weights, and the disclosed embodiments are not limited to any particular combination of analyses and weights.

[0191] FIG. 6 is a flowchart showing an exemplary process 600 for causing one or more navigational responses based on stereo image analysis, consistent with disclosed embodiments. At step 610, processing unit 110 may receive a first and second plurality of images via data interface 128. For example, cameras included in image acquisition unit 120 (such as image capture devices 122 and 124 having fields of view 202 and 204) may capture a first and second plurality of images of an area forward of vehicle 200 and transmit them over a digital connection (e.g., USB, wireless, Bluetooth, etc.) to processing unit 110. In some embodiments, processing unit 110 may receive the first and second plurality of images via two or more data interfaces. The disclosed embodiments are not limited to any particular data interface configurations or protocols.

[0192] At step 620, processing unit 110 may execute stereo image analysis module 404 to perform stereo image analysis of the first and second plurality of images to create a 3D map of the road in front of the vehicle and detect features within the images, such as lane markings, vehicles, pedestrians, road signs, highway exit ramps, traffic lights, road hazards, and the like. Stereo image analysis may be performed in a manner similar to the steps described in connection with FIGS. 5A-5D, above. For example, processing unit 110 may execute stereo image analysis module 404 to detect candidate objects (e.g., vehicles, pedestrians, road marks, traffic lights, road hazards, etc.) within the first and second plurality of images, filter out a subset of the candidate objects based on various criteria, and perform multi-frame analysis, construct measurements, and determine a confidence level for the remaining candidate objects. In performing the steps above, processing unit 110 may consider information from both the first and second plurality of images, rather than information from one set of images alone. For example, processing unit 110 may analyze the differences in pixel-level data (or other data subsets from among the two streams of captured images) for a candidate object appearing in both the first and second plurality of images. As another example, processing unit 110 may estimate a position and/or velocity of a candidate object (e.g., relative to vehicle 200) by observing that the object appears in one of the plurality of images but not the other or relative to other differences that may exist relative to objects appearing if the two image streams. For example, position, velocity, and/or acceleration relative to vehicle 200 may be determined based on trajectories, positions, movement characteristics, etc. of features associated with an object appearing in one or both of the image streams.

[0193] At step 630, processing unit 110 may execute navigational response module 408 to cause one or more navigational responses in vehicle 200 based on the analysis performed at step 620 and the techniques as described above in connection with FIG. 4. Navigational responses may include, for example, a turn, a lane shift, a change in acceleration, a change in velocity, braking, and the like. In some embodiments, processing unit 110 may use data derived from execution of velocity and acceleration

IPR2025-01034
Tesla EX1002 Page 1702

module 406 to cause the one or more navigational responses. Additionally, multiple navigational responses may occur simultaneously, in sequence, or any combination thereof.

[0194] FIG. 7 is a flowchart showing an exemplary process 700 for causing one or more navigational responses based on an analysis of three sets of images, consistent with disclosed embodiments. At step 710, processing unit 110 may receive a first, second, and third plurality of images via data interface 128. For instance, cameras included in image acquisition unit 120 (such as image capture devices 122, 124, and 126 having fields of view 202, 204, and 206) may capture a first, second, and third plurality of images of an area forward and/or to the side of vehicle 200 and transmit them over a digital connection (e.g., USB, wireless, Bluetooth, etc.) to processing unit 110. In some embodiments, processing unit 110 may receive the first, second, and third plurality of images via three or more data interfaces. For example, each of image capture devices 122, 124, 126 may have an associated data interface for communicating data to processing unit 110. The disclosed embodiments are not limited to any particular data interface configurations or protocols.

[0195] At step 720, processing unit 110 may analyze the first, second, and third plurality of images to detect features within the images, such as lane markings, vehicles, pedestrians, road signs, highway exit ramps, traffic lights, road hazards, and the like. The analysis may be performed in a manner similar to the steps described in connection with FIGS. 5A-5D and 6, above. For instance, processing unit 110 may perform monocular image analysis (e.g., via execution of monocular image analysis module 402 and based on the steps described in connection with FIGS. 5A-5D, above) on each of the first, second, and third plurality of images. Alternatively, processing unit 110 may perform stereo image analysis (e.g., via execution of stereo image analysis module 404 and based on the steps described in connection with FIG. 6, above) on the first and second plurality of images, the second and third plurality of images, and/or the first and third plurality of images. The processed information corresponding to the analysis of the first, second, and/or third plurality of images may be combined. In some embodiments, processing unit 110 may perform a combination of monocular and stereo image analyses. For example, processing unit 110 may perform monocular image analysis (e.g., via execution of monocular image analysis module 402) on the first plurality of images and stereo image analysis (e.g., via execution of stereo image analysis module 404) on the second and third plurality of images. The configuration of image capture devices 122, 124, and 126—including their respective locations and fields of view 202, 204, and 206—may influence the types of analyses conducted on the first, second, and third plurality of images. The disclosed embodiments are not limited to a particular configuration of image capture devices 122, 124, and 126, or the types of analyses conducted on the first, second, and third plurality of images.

[0196] In some embodiments, processing unit 110 may perform testing on system 100 based on the images acquired and analyzed at steps 710 and 720. Such testing may provide an indicator of the overall performance of system 100 for certain configurations of image capture devices 122, 124, and 126. For example, processing unit 110 may determine the proportion of "false hits" (e.g., cases where system 100 incorrectly determined the presence of a vehicle or pedestrian) and "misses."

IPR2025-01034
Tesla EX1002 Page 1703

[0197] At step 730, processing unit 110 may cause one or more navigational responses in vehicle 200 based on information derived from two of the first, second, and third plurality of images. Selection of two of the first, second, and third plurality of images may depend on various factors, such as, for example, the number, types, and sizes of objects detected in each of the plurality of images. Processing unit 110 may also make the selection based on image quality and resolution, the effective field of view reflected in the images, the number of captured frames, the extent to which one or more objects of interest actually appear in the frames (e.g., the percentage of frames in which an object appears, the proportion of the object that appears in each such frame, etc.), and the like.

[0198] In some embodiments, processing unit 110 may select information derived from two of the first, second, and third plurality of images by determining the extent to which information derived from one image source is consistent with information derived from other image sources. For example, processing unit 110 may combine the processed information derived from each of image capture devices 122, 124, and 126 (whether by monocular analysis, stereo analysis, or any combination of the two) and determine visual indicators (e.g., lane markings, a detected vehicle and its location and/or path, a detected traffic light, etc.) that are consistent across the images captured from each of image capture devices 122, 124, and 126. Processing unit 110 may also exclude information that is inconsistent across the captured images (e.g., a vehicle changing lanes, a lane model indicating a vehicle that is too close to vehicle 200, etc.). Thus, processing unit 110 may select information derived from two of the first, second, and third plurality of images based on the determinations of consistent and inconsistent information.

[0199] Navigational responses may include, for example, a turn, a lane shift, a change in acceleration, and the like. Processing unit 110 may cause the one or more navigational responses based on the analysis performed at step 720 and the techniques as described above in connection with FIG. 4. Processing unit 110 may also use data derived from execution of velocity and acceleration module 406 to cause the one or more navigational responses. In some embodiments, processing unit 110 may cause the one or more navigational responses based on a relative position, relative velocity, and/or relative acceleration between vehicle 200 and an object detected within any of the first, second, and third plurality of images. Multiple navigational responses may occur simultaneously, in sequence, or any combination thereof.

[0200] Smart Lane Offset

[0201] System 100 may provide driver assist functionality that monitors and adjusts the free space between vehicle 200 and boundaries (e.g., lane boundaries) within which vehicle 200 is traveling. A lane may refer to a designated or intended travel path of a vehicle and may have marked (e.g., lines on a road) or unmarked boundaries (e.g., an edge of a road, a road barrier, guard rail, parked vehicles, etc.). For instance, as a default, system 100 may maximize or increase the free space between vehicle 200 and the current lane boundaries. Further, under certain conditions, system 100 may offset vehicle 200 toward one side of the current lane of travel without leaving the lane. For example, where vehicle 200 is traveling around a curve, system 100 may decrease the offset towards the inside of the curve (e.g., adjust the position of vehicle 200 so that it is closer to the inside of the curve). As another example, where

IPR2025-01034
Tesla EX1002 Page 1704

obstacles—such as parked cars, pedestrians, or cyclists—are present on one side of the lane, system 100 may increase the offset on the side of vehicle 200 where the obstacles are located (e.g., adjust the position of vehicle 200 so that it is further from the obstacles).

[0202] FIG. 8A illustrates vehicle 200 traveling on a roadway 800 in which the disclosed systems and methods for identifying lane constraints and operating vehicle 200 within the lane constraints may be used. As shown, vehicle 200 may have a first vehicle side 802, which may be a first distance 805 from a first lane constraint 810. Similarly, vehicle 200 may have a second vehicle side 812 opposite from first vehicle side 802, and second vehicle side 812 may be a second distance 815 from second lane constraint 820. In this manner, first lane constraint 810 and second lane constraint 820 may define a lane within which vehicle 200 may travel.

[0203] Processing unit 110 may be configured to determine first lane constraint 810 and second lane constraint 820 based on a plurality of images acquired by image capture device 122–126 that processing unit 110 may receive via data interface 128. According to some embodiments, first lane constraint 810 and/or second lane constraint 820 may be identified by visible lane boundaries, such as dashed or solid lines marked on a road surface. Additionally or alternatively, first lane constraint 810 and/or second lane constraint 820 may include an edge of a road surface or a barrier. Additionally or alternatively, first lane constraint 810 and/or second lane constrain 820 may include markers (e.g., Botts' dots). According to some embodiments, processing unit 110 may determine first lane constraint 810 and/or second lane constraint 820 by identifying a midpoint of a road surface width. According to some embodiments, if processing unit 110 identifies only first lane constraint 810, processing unit 110 may estimate second lane constraint 820, such as based on an estimated lane width or road width. Processing unit 110 may identify lane constraints in this manner when, for example, lines designating road lanes are not painted or otherwise labeled.

[0204] Detection of first lane constraint 810 and/or second lane constraint 820 may include processing unit 110 determining their 3D models in camera coordinate system. For example, the 3D models of first lane constraint 810 and/or second lane constraint 820 may be described by a third-degree polynomial. In addition to 3D modeling of first lane constraint 810 and/or second lane constraint 820, processing unit 110 may perform multi-frame estimation of host motion parameters, such as the speed, yaw and pitch rates, and acceleration of vehicle 200. Optionally, processing unit 110 may detect static and moving vehicles and their position, heading, speed, and acceleration, all relative to vehicle 200. Processing unit 110 may further determine a road elevation model to transform all of the information acquired from the plurality of images into 3D space.

[0205] Generally, as a default condition, vehicle 200 may travel relatively centered within first and second lane constraints 810 and/or 820. However, in some circumstances, environmental factors may make this undesirable or unfeasible, such as when objects or structures are present on one side of the road. Thus, there may be circumstances in which it may be desirable or advantageous for vehicle 200 to be closer to one lane constraint or the other. Processing unit 110 may also be configured to determine whether such circumstances, called lane offset conditions, exist based on the plurality of images.

IPR2025-01034
Tesla EX1002 Page 1705

[0206] To determine whether lane offset conditions exist, processing unit 110 may be configured to determine the presence of one or more objects 825 in the vicinity of vehicle 200. For example object 825 may comprise another vehicle, such as a car, truck or motorcycle traveling on roadway 800. Processing unit 110 may determine, for each object 825, an offset profile. The offset profile may include a determination of whether in its current and predicted position object 825 will be within a predefined range of vehicle 200. If processing unit 110 determines that object 825 is or will be within a predefined range of vehicle 200, processing unit 110 may determine whether there is enough space within first lane constraint 810 and second lane constraint 820, for vehicle 200 to bypass object 825. If there is not enough space, processing unit 110 may execute a lane change. If there is enough space, processing unit 110 may determine whether there is enough time to bypass object 825 before the distance between vehicle 200 and object 825 closes. If there is enough time, processing unit 110 may initiate and or activate the offset maneuver to bypass object 825. The offset maneuver may be executed by processing unit 110 so that the movement of vehicle 200 is smooth and comfortable for the driver. For example, the offset slew rate may be approximately 0.15 to 0.75 m/sec. The offset maneuver may be executed so that the maximum amplitude of the offset maneuver will occur when the gap between vehicle 200 and object 825 closes. If there is not enough time, processing unit 110 may initiate braking (e.g., by transmitting electronic signals to braking system 230) and then initiate offset maneuver.

[0207] After each offset profile is set for each object 825, processing unit may combine offset profiles such that the maximum lateral distance is kept from each object 825 that vehicle 200 is bypassing. That is, offset maneuvers may be modified and/or executed such that the lateral distance between vehicle 200 and each object 825 that vehicle 200 is bypassing is maximized.

[0208] Additionally or alternatively, object 825 may be a parked or stationary vehicle, a wall, or a person, such as pedestrian or cycling traffic. Processing unit 110 may determine a lane offset condition exists based on certain characteristics of object 825. For example, processing unit 110 may determine object 825 constitutes a lane offset condition if the height of object 825 exceeds a predetermined threshold, such as 10 cm from a road surface. In this manner, processing unit 110 may be configured to filter out objects that would not present a lane offset condition, such as small pieces of debris.

[0209] Additionally or alternatively, processing unit 110 may be configured to determine whether a lane offset condition exists on first vehicle side 802 based on a position of a target object 830 on vehicle first side 802. Target object 830 may include one or more objects that constitute a lane offset condition. Additionally or alternatively, target object 830 may not constitute a lane offset condition. For example, target object 830 may be a street sign or other object a sufficient distance from the travel lane or occurring with sufficient infrequency to not constitute a lane offset condition. Processing unit 110 may be configured to conclude a lane offset condition does not exist if such a target object 830 is detected.

[0210] Processing unit 110 may be configured to cause vehicle 200 to travel such that first distance 805 and second distance 810 are substantially different to avoid or stay farther away from object 825. For example, if a lane offset condition exists on first vehicle side 802, processing unit 110 may be configured to cause vehicle 200 to travel within first lane constraint 810 and second lane constraint 820

IPR2025-01034
Tesla EX1002 Page 1706

such that first distance 805 is greater than second distance 815. This is illustrated, for example, in FIG. 8A. Alternatively, if a lane offset condition exists on second vehicle side 812, processing unit 110 may create or execute an offset profile that is configured to cause vehicle 200 to travel within first lane constraint 810 and second lane constraint 820 such that first distance 805 is less than second distance 815. This is illustrated, for example, in FIG 8B.

[0211] As another example, a parked vehicle may be located on one side of vehicle 200 and a pedestrian may be located on the other side of vehicle 200. In such a situation, system 100 may determine that is desirable to reduce the distance between vehicle 200 and the parked vehicle, in order to provide more space between vehicle 200 and the pedestrian. Accordingly, processing unit 110 may cause vehicle 200 to travel such that the distance between the parked vehicle is reduced.

[0212] The identity of first vehicle side 802 and second vehicle side 812 need not be static, such that at different points in time, processing unit 110 may identify first vehicle side 802 as the driver's side or as the passenger's side of vehicle 200. For example, the identity of first vehicle side 802 may change depending on the presence of one or more objects 825 on that side of vehicle 200, such that if one lane offset condition exists based on object 825, it exists on first vehicle side 802. In such circumstances, processing unit 110 may create or execute an offset profile that is configured to cause vehicle 200 to travel within first lane constraint 810 and second lane constraint 820 such that first distance 805, which is greater than second distance 815, is provided toward object 825.

[0213] According to some embodiments, when a lane offset condition exists on first vehicle side 802, processing unit 110 may create an offset profile configured to cause vehicle 200 to travel within first lane constraint 810 and second lane constraint 820 such that first distance 805 is at least 1.25 times greater than second distance 815. Additionally or alternatively, when a lane offset condition exists on first vehicle side 802, processing unit 110 may create an offset profile that is configured to cause vehicle 200 to travel within first lane constraint 810 and second lane constraint 820 such that first distance 805 is at least 2 times greater than second distance 815.

[0214] In some embodiments, as shown in FIG. 8C, processing unit 110 may determine a lane offset condition exists on both first vehicle side 802 and on second vehicle side 812. Processing unit 110 may then create an offset profile for this offset condition that is configured to cause vehicle 200 to travel within first lane constraint 810 and second lane constraint 820 such that first distance 805 is substantially the same as second distance 815.

[0215] Processing unit 110 may be configured so that the offset profiles for moving objects 825 as well as stationary objects 825 are prioritized. For example, processing unit 110 may prioritize offset profiles to keep a predefined distance between vehicle 200 and moving objects 825 and/or static objects 825. Processing unit 200 may prioritize these offset conditions over those offset conditions based on certain lane characteristics, such as a curve. The last priority lane offset condition may include mimicking a lead vehicle.

[0216] Processing unit 110 may factor offset profiles or offset conditions into a desired look-ahead point, which may be located at the middle of the lane defined by first lane constraint 810 and

IPR2025-01034
Tesla EX1002 Page 1707

second lane constraint 820. Processing unit 110 may compute and implement a yaw rate command based on the look-ahead point and the offset profiles. The yaw rate command may be used to compute a torque command based on the yaw rate command and the yaw rate of vehicle 200 measured by using a gyroscope. Processing unit 110 may transmit the torque command to a steering system (e.g., steering system 240) of vehicle 200.

[0217] According to some embodiments, input from a driver of vehicle 200, such as via user interface 170, may override processing unit 110. For example, a user input may override the control of processing unit 110 to cause vehicle 200 to travel within first lane constraint 810 and second lane constraint 820 such that first distance 805 is greater than second distance 815.

[0218] Additionally or alternatively, processing unit 110 may be configured to determine, based on the plurality of images captured by image capture device 122, whether a lane offset condition is substantially non-existent. This may include circumstances in which one or more objects 825 below a certain size threshold are detected, one or more objects 825 detected are outside of a predetermined distance from the lane constraint, and/or when no objects 825 are detected. Under such circumstances, processing unit 110 may be configured to cause vehicle 200 to travel within first lane constraint 810 and second lane constraint 820 such that first distance 805 is equal to or substantially equal to second distance 815.

[0219] A lane offset condition may include a curved road, as illustrated in FIG. 8D. Processing unit 110 may be configured to cause vehicle 200 to travel within first lane constraint 810 and second lane constraint 820 such that first distance 805 is toward the outside of the curved road relative to vehicle 200 and second distance 815 is toward an inside of the curved road relative to vehicle 200. For example, first distance 805 may be less than second distance 815.

[0220] FIG. 9 is an exemplary block diagram of memory 140 and/or 150, which may store instructions for performing one or more operations consistent with disclosed embodiments. As illustrated in FIG. 9, memory 140 may store one or more modules for performing the lane offset condition detection and responses described herein. For example, memory 140 may store a lane constraint module 910 and a lane offset module 920. Application processor 180 and/or image processor 190 may execute the instructions stored in any of modules 910 and 920 included in memory 140. One of skill in the art will understand that references in the following discussions to processing unit 110 may refer to application processor 180 and image processor 190 individually or collectively. Accordingly, steps of any of the following processes may be performed by one or more processing devices.

[0221] Lane constraint module 910 may store instructions which, when executed by processing unit 110, may detect and define first lane constraint 810 and second lane constraint 820. For example, lane offset module 910 may process the plurality of images received from at least one image capture device 122–124 to detect first lane constraint 810 and second lane constraint 820. As discussed above, this may include identifying painted lane lines and/or measuring a midpoint of a road surface.

[0222] Lane offset module 920 may store instructions which, when executed by processing unit 110, may detect the presence of a lane offset condition and/or identify whether lane offset condition is

IPR2025-01034
Tesla EX1002 Page 1708

present on first vehicle side 802 and/or second vehicle side 812. For example, lane offset module 920 may process the plurality of images to detect the presence of object(s) 825 on first vehicle side 802 and/or second vehicle side 812. Lane offset module 920 may process the plurality of images to detect a curve in the road on which vehicle 200 is traveling. Additionally or alternatively, lane offset module 920 may receive information from another module or other system indicative of the presence of object(s) 825 and/or a curved lane. Lane offset module 920 may execute control to change the position of vehicle 200 to first lane constraint 810 and/or second lane constraint 820. For example, if lane offset module 920 determines a lane offset condition only on first vehicle side 802, lane offset module 920 may move vehicle 200 closer to second lane constraint 820. On the other hand, if lane offset module 920 determines a lane offset condition only on first vehicle side 812, lane offset module 920 may move vehicle 200 closer to first lane constraint 810.

[0223] Fig. 10 illustrates a process 1000 for navigating vehicle 200, consistent with disclosed embodiments. Process 1000 may identify lane constraints that define a lane of travel for vehicle travel. Process 1000 include causing vehicle 200 to travel closer to one or the other lane constraint, such as first lane constraint 810 or second lane constraint 820, in response to detecting a lane offset condition. In this manner, process 1000 may be used to drive vehicle 200 within lane constraints as well as account for environmental factors that may make it more desirable to shift vehicle 200 within first lane constraint 810 and second lane constraint 820.

[0224] At step 1010, process 1000 may include acquiring, using at least one image capture device 122, 124, and/or 126, a plurality of images of an area in the vicinity of vehicle 200. For example, processing unit 110 may receive the plurality of images may through data interface 128. For example, processing unit 110 may be configured to determine the presence of one or more objects 825 on the side of the road. For example, object 825 may be a parked or stationary vehicle, a wall, or a person, such as pedestrian or cycling traffic. Processing unit 110 may determine if a lane offset condition exists based on certain characteristics of object 825. For example, processing unit 110 may determine that object 825 constitutes a lane offset condition if the height of object 825 exceeds a predetermined threshold, such as 10 cm from a road surface. In this manner, processing unit 110 may be configured to filter out objects that would not present a lane offset condition, such as small pieces of debris.

[0225] Additionally or alternatively, processing unit 110 may be configured to determine whether a lane offset condition exists on first vehicle side 802 based on a position of a target object 830 on vehicle first side 802. Target object 830 may be one or more objects that constitute a lane offset condition. Additionally or alternatively, target object 830 may not constitute a lane offset condition. For example, target object 830 may be a road barrier or a street sign. Processing unit 110 may be configured to conclude a lane offset condition does not exist if such a target object 830 is detected.

[0226] At step 1020, process 1000 may determine from the plurality of images a first lane constraint on first vehicle side 802 and a second lane constraint on second vehicle side 812. For example, processing unit 110 may be configured to determine first lane constraint 810 and second lane constraint 820 based on the plurality of images received via data interface 128.

IPR2025-01034
Tesla EX1002 Page 1709

[0227] At step 1030, process 1000 may determine whether a lane offset condition exists on first vehicle side 802. If a lane offset condition does exist on first vehicle side 802, at step 1040, process 1000 may include causing vehicle 200 to travel within first lane constraint 810 and second lane constraint 820 such that second distance 815 is less than first distance 805. Processing unit 110 may be configured to cause vehicle 200 to travel such that first distance 805 and second distance 810 are substantially different to avoid or stay farther away from object 825. For example, if a lane offset condition exists on first vehicle side 802, processing unit 110 may be configured to cause vehicle 200 to travel within first lane constraint 810 and second lane constraint 820 such that first distance 805 is greater than second distance 815. This is illustrated, for example, in FIG. 8A. Alternatively, if a lane offset condition exists on second vehicle side 812, processing unit 110 may be configured to cause vehicle 200 to travel within first lane constraint 810 and second lane constraint 820 such that first distance 805 is less than second distance 815. This is illustrated, for example, in FIG 8B. For example, to navigate vehicle 200 according to process 1000, processing unit 110 may transmit electronic signals to one or more of throttling system 220, braking system 230, and/or steering system 240 of vehicle 200.

[0228] If a lane offset condition does not exist on first vehicle side 802, in step 1050, method may include determining whether lane offset condition exists on second vehicle side 812. If a lane offset condition exists on second vehicle side 812, the method may include causing vehicle 200 to travel between first lane constraint 810 and second lane constraint 820 such that first distance 805 is less than second distance 815.

[0229] Navigating a Vehicle to a Default Lane

[0230] System 100 may provide driver assist functionality that monitors the location of vehicle 200 in a current lane of travel and moves vehicle 200 into a predetermined default travel lane if the current lane of travel is not the predetermined default travel lane. The predetermined default travel lane may be defined by a user input and/or as a result of processing images received from at least one image capture device 122–126.

[0231] System 100 may also provide notification of an impending lane change of vehicle 200 to the predetermined default travel lane to the driver and passengers of vehicle 200 and/or other drivers. For example, system 100 may activate a turn signal positioned at or near one of bumper regions 210. Additionally or alternatively, system 100 may sound an audible notification, such as through speakers 360. Vehicle 200 may use system 100 to select a particular lane as predetermined default travel lane when vehicle is traveling. When the current lane within which vehicle 200 is traveling—e.g., the current lane of travel—differs from the predetermined default travel lane, system 100 may cause vehicle 200 to make a lane change, e.g., into the predetermined default travel lane.

[0232] FIG. 11 illustrates vehicle 200 traveling in a current lane of travel 1110 of roadway 800. According to some embodiments, vehicle 200 may have a predetermined default travel lane 1120. For example, predetermined default travel lane 1120 may be the right-most lane of roadway 800. Navigation system 100 may be configured to determine whether vehicle 200 is traveling in predetermined default travel lane 1120 and, if not, cause vehicle 200 to change to predetermined default travel lane 1120. For

IPR2025-01034
Tesla EX1002 Page 1710

example, processing unit 110 may be configured to compare current lane of travel 1110 with predetermined default travel lane 1120 and cause vehicle 200 to return to predetermined default travel lane 1120.

[0233] According to some embodiments, processing unit 110 may detect an object 1130 in predetermined default travel lane 1120 based on a plurality of images acquired by one or more of image capture devices 122–126. Processing unit 110 may detect the position and speed of vehicle 200 relative to object 1130 by analyzing the images using techniques described in connection with FIGS. 5A-5D, above. According to some embodiments, processing unit 110 may determine whether vehicle 200 should pass object 1130. This may be desirable if, for example, the speed and/or acceleration of vehicle 200 relative to object 1130 exceeds a certain threshold.

[0234] FIG. 12A is an exemplary block diagram of memory 140, which may store instructions for performing one or more operations consistent with disclosed embodiments. As illustrated in FIG. 12A, memory 140 may store one or more modules for performing the default travel lane and current travel lane detection and responses described herein. For example, memory 140 may store a current lane detection module 1210, a default lane detection module 1220, and an action module 1230.

[0235] Current lane detection module 1210 may store instructions which, when executed by processing unit 110, may detect and define current lane of travel 1110. For example, processing unit 110 may execute current lane detection module 1212 to process the plurality of images received from at least one image capture device 122–124 and detect current lane of travel 1110. This may include detecting the relative position of vehicle 200 with respect to the edge of roadway 800, a midpoint of roadway 800, and/or lane markers, such as painted lane lines. Processing unit 110 may detect the position of vehicle 200 relative to roadway 800 by analyzing the images using techniques described in connection with FIGS. 5A-5D, above.

[0236] Default lane detection module 1220 may store instructions which, when executed by processing unit 110, may identify predetermined default travel lane 1120 and compare default lane detection module 1220 to current lane of travel 1110 identified by current lane detection module 1210. Default lane detection module 1220 may identify predetermined default travel lane 1120 based upon a user input and/or the plurality of images received from at least one image capture device 122–124. For example, a user may select a default lane through voice commands received by speakers 360 or by making a selection on a menu displayed on touch screen 320.

[0237] In some embodiments, predetermined default travel lane 1120 may be the right-most travel lane, or it may be the lane that has the more desirable features. For example, default lane detection module 1220 may include instructions to select the lane with less traffic, the lane in which vehicles are traveling closest to speed of vehicle 200, and/or a lane closest to an approaching exit or street to which vehicle 200 will turn. In some embodiments, predetermined default travel lane 1120 may be determined based on data received from position sensor 130, such as a global positioning system.

[0238] Action module 1230 may store instructions which, when executed by processing unit 110, may cause a response to the identification of current lane of travel 1110 and predetermined default

IPR2025-01034
Tesla EX1002 Page 1711

travel lane 1120. For example, processing unit 110 may execute action module 1230 to cause vehicle 200 to change lanes if current lane of travel 1110 is not the same as predetermined default travel lane 1120. Additionally or alternatively, action module 1230 may initiate a notification of the lane change, such as activating turn signal 210 and or causing an audible announcement.

[0239] Action module 1230 may include instructions that cause processing unit 110 to determine whether vehicle 200 should move out of predetermined default travel lane 1120. For example, action module 1230 may determine that object 1130 in predetermined default travel lane 1120 should be bypassed by vehicle 200.

[0240] Action module 1230 may further include instructions that cause processing unit 110 to determine whether it is safe to make a lane change. For example, prior to executing a lane change, processing unit 110 may evaluate determine one or more characteristics of roadway 800 based on, for example, analysis of the plurality of images conducted using techniques described in connection with FIGS. 5A-5D, above. If the analysis indicates conditions are not safe to change lanes, processing unit 110 may determine that vehicle 200 should stay in the current lane.

[0241] Action module 1230 may include additional instructions for manipulating vehicle 200 to maneuver out of and return to predetermined default travel lane 1120, such as for bypassing object 1130. When executing these instructions, processing unit 110 may estimate a location of predetermined default travel lane 1120 using estimated motion of vehicle 200. This may be advantageous in circumstances in which predetermined default travel lane 1120 does not remain detectable by image capture devices 122-124.

[0242] Processing unit 110 may be configured to execute an offset profile that offsets vehicle 200 from predetermined default travel lane 1120 by a full lane width, which may be estimated based on the distance between detected lane markers. The offset maneuver defined by offset profile may be executed by processing unit 110 so that the movement of vehicle 200 is smooth and comfortable for the driver. For example, the offset slew rate may be approximately 0.15 to 0.75 m/sec. During the offset maneuver, processing unit 110 may execute instructions from action module 1230 that switch to following the center of current lane of travel 1110. These instructions may include gradually transitioning from following the predicted lane with offset to following current lane of travel 1110. A gradual transition may be accomplished by defining desired look-ahead point so that it is not allowed to change in time more than the recommended slew rate, which may be around 0.25 m/sec.

[0243] The instructions for transitioning vehicle 200 from predetermined default travel lane 1120 may be used to transition vehicle 200 back into predetermined default travel lane. For example, processing unit 110 may be configured to execute an offset profile that offsets vehicle 200 from current lane of travel 1110 by a full lane width, which may be estimated based on the distance between detected lane markers. The offset maneuver defined by offset profile may be executed by processing unit 110 so that the movement of vehicle 200 is smooth and comfortable for the driver. For example, the offset slew rate may be approximately 0.15 to 0.75 m/sec. During the offset maneuver, processing unit 110 may execute instructions from action module 1230 that switch to following the center of predetermined default

IPR2025-01034
Tesla EX1002 Page 1712

travel lane 1120. These instructions may include gradually transitioning from following the predicted lane with offset to following predetermined default travel lane 1120. A gradual transition may be accomplished by defining desired look-ahead point so that it is not allowed to change in time more than the recommended slew rate, which may be around 0.25 m/sec.

[0244] At one or more of the steps for transitioning vehicle 200 between two lanes, processing unit 110 may compute and implement a yaw rate command based on the look-ahead point and the offset profiles. The yaw rate command may be used to compute a torque command based on the yaw rate command and the yaw rate of vehicle 200 measured using a gyroscope. Processing unit 110 may transmit a torque command to a steering system (e.g., steering system 240) of vehicle 200.

[0245] FIG. 12B illustrates a process 1250 for navigating vehicle 200 to a default lane consistent with disclosed embodiments. According to some embodiments, process 1250 may be implemented by one or more components of navigation system 100, such as at least one processing unit 110. Process 1250 may identify current lane of travel 1110 of vehicle 200 and compare it with predetermined default travel lane 1120 to determine whether vehicle 200 is traveling within predetermined default travel lane 1120. If vehicle 200 is not traveling in predetermined default travel lane 1120, processing unit 110 may cause vehicle 200 to change lanes so that it navigates to default travel lane 1120.

[0246] At step 1260, one or more of image capture devices 122–124 may acquire a plurality of images of an area in a vicinity of vehicle 200. Processing unit 110 may receive the plurality of images via data interface 128.

[0247] At step 1270, processing unit 110 may execute current lane detection module 1210 detect and define current lane of travel 1110. For example, processing unit 110 may process the plurality of images to, for example, detect the relative position of vehicle 200 with respect to the edge of roadway 100, a midpoint of roadway 100, and/or painted lane markers. Processing unit 110 may detect the position of vehicle 200 relative to roadway 800 by analyzing the images using techniques described in connection with FIGS. 5A-5D, above.

[0248] At step 1280, processing unit 110 may execute default lane detection module 1220 to identify predetermined default travel lane 1120 and compare default lane detection module 1220 to current lane of travel 1110 identified by current lane detection module 1210. Default lane detection module 1220 may identify predetermined default travel lane 1120 based upon a user input and/or the plurality of images received from at least one image capture device 122–124.

[0249] For example, as discussed above, processing unit 110 may determine predetermined default travel lane 1120 based on any number of factors. Predetermined default travel lane 1120 may be the right-most lane among the plurality of travel lanes 1110 and 1120. Additionally or alternatively, predetermined default travel lane 1120 may be determined based on an input received from a user via user interface 170, by processing the plurality of images, and/or based on data received from position sensor 130, such as a global positioning system. Predetermined default travel lane 1120 may be determined once, once per vehicle trip, or on regular intervals. For example, predetermined default travel lane 1120 may be determined dynamically in response to conditions at a given location.

IPR2025-01034
Tesla EX1002 Page 1713

[0250] If current lane 1110 is not the same as predetermined default travel lane 1120, processing unit 110 may execute action module 1230 to cause vehicle 100 to navigate to default travel lane 1120. For example, processing unit 110 may transmit electronic signals to one or more of throttling system 220, braking system 230, and/or steering system 240 of vehicle 200 to trigger the desired response. For example, processing unit 110 may cause steering system 240 to turn the steering wheel of vehicle 200 to achieve a rotation of a predetermined angle.

[0251] Further, prior to executing a lane change, processing unit 110 may determine whether it is safe (e.g., there are no vehicles or objects in the way) to change lanes. As discussed above, processing unit 110 may evaluate one or more characteristics of roadway 800 based on, for example, analysis of the plurality of images conducted using techniques described in connection with FIGS. 5A-5D, above. If conditions are not safe to change lanes, processing unit 110 may determine that vehicle 200 should stay in the current lane.

[0252] In some embodiments, execution of action module 1230 may initiate a notification of the lane change. For example, processing unit 110 may cause a signal to activate a turn signal and/or cause an audible announcement via speakers 360. Accordingly, such notification may occur prior to vehicle 200 changing lanes. In other embodiments, execution of action module 1230 may initiate a notification to a driver of vehicle 200 that vehicle 200 is not traveling in a default lane without causing the lane change to occur. Accordingly, in such an embodiment, the driver of vehicle 200 may determine whether to manually take action and steer vehicle 200 to change lanes.

[0253] In some embodiments, system 100 may notify the user of vehicle 200 and/or other drivers in the vicinity of vehicle 200 that vehicle 200 will be changing lanes if vehicle 200 will be moved to predetermined default travel lane 1120. For example, processing unit 110 may activate a turn signal of vehicle 200 prior to causing vehicle 200 to change lanes. Additionally or alternatively, an audible announcement to notify other drivers in the vicinity may be caused by processing unit 110. The audible announcement may be transmitted via, for example, Bluetooth, to receivers included in other nearby vehicles. Additionally or alternatively, at least one processing unit 110 may cause an audible indicator to notify the driver of vehicle 200 prior to causing vehicle 200 to switch lanes. In this manner, driver of vehicle 200 can anticipate the control system 100 will exert on vehicle 200.

[0254] Controlling Velocity of a Turning Vehicle

[0255] System 100 may provide driver assist functionality that controls the velocity (i.e., speed and/or direction) of vehicle 200 in different scenarios, such as while making a turn (e.g., through a curve). For example, system 100 may be configured to use a combination of map, position, and/or visual data to control the velocity of vehicle 200 when turning. In particular, system 100 may control the velocity of vehicle 200 as it approaches a curve, while navigating a curve, and/or as it exits a curve. System 100 may consider different factors to control the velocity depending on the position of vehicle 200 relative to the curve at a given time. For example, system 100 may initially cause vehicle 200 to slow down in response to learning that a curve is located a certain distance ahead of vehicle 200. While vehicle 200 turns through

IPR2025-01034
Tesla EX1002 Page 1714

the curve, however, system 100 may cause vehicle 200 to accelerate and/or charge direction based on an analysis of the characteristics of the curve.

[0256] FIGS. 13A and 13B are diagrammatic representations of a vehicle (e.g., vehicle 200) approaching, and navigating, a curve with one or more characteristics on road 1300, consistent with the disclosed embodiments. As illustrated in FIG. 13A, visual indicators, such as road sign 1302 located near road 1300, may inform vehicle 200 that a curve lies ahead. In response to the warning provided by road sign 1302, a driver of vehicle 200 and/or a system 100 providing driver assist functionality of vehicle 200 may adjust the velocity of vehicle 200 (e.g., by slowing down and/or steering) to safely navigate the curve.

[0257] As vehicle 200 approaches the curve, system 100 may detect the lane width 1306 and the curve radius 1308 by using image capture devices 122 and/or 124 (which may be cameras) of vehicle 200. Based on the curve radius 1308, the lane width 1306, and other characteristics associated with the curve detected using image capture devices 122 and/or 124, system 100 may adjust the velocity of vehicle 200. Specifically, system 100 may adjust the velocity as vehicle 200 approaches the curve and/or while vehicle 200 navigates the curve. System 100 may also adjust the velocity as vehicle 200 exits the curve, in response to, for example, traffic light 1304 appearing after the curve. Further detail regarding adjustments to the velocity of vehicle 200 and detection of the lane width 1306, the radius of curvature or curve radius 1308, and characteristics associated with the curve are described in connection with FIGS. 14 and 15, below.

[0258] In some embodiments, system 100 may recognize a curve to be navigated based on map data and/or vehicle position information (e.g., GPS data). System 100 may determine an initial target velocity for the vehicle based on one or more characteristics of the curve as reflected in the map data. System 100 may adjust a velocity of the vehicle to the initial target velocity and determine, based on one or more images acquired by one or more of image capture devices 122-126, one or more observed characteristics of the curve. System 100 may determine an updated target velocity based on the one or more observed characteristics of the curve and adjust the velocity of the vehicle to the updated target velocity.

[0259] FIG. 14 is an exemplary block diagram of a memory configured to store instructions for performing one or more operations consistent with the disclosed embodiments. As indicated in FIG. 14, memory 140 may store a curve recognition module 1402, a characteristic observation module 1404, and a velocity module 1406. The disclosed embodiments are not limited to any particular configuration of memory 140. Further, processing unit 110 may execute the instructions stored in any of modules 1402-1406 included in memory 140.

[0260] In one embodiment, curve recognition module 1402 may store software instructions (such as computer vision software) which, when executed by processing unit 110, detects a curve by, for example, analyzing one or more sets of images and/or using map and/or position data (e.g., data stored in map database 160). The image sets may be acquired by one or more of image capture devices 122, 124, and 126. Based on the analysis, system 100 (e.g., via processing unit 110) may cause a change in velocity

IPR2025-01034
Tesla EX1002 Page 1715

of vehicle 200. For example, processing unit 110 may cause vehicle 200 to reduce its speed by a predetermined amount and/or adjust its direction by a particular angle if processing unit 110 detects the presence of a curve located within a minimum threshold distance ahead of vehicle 200.

[0261] In one embodiment, characteristic observation module 1404 may store software instructions (such as computer vision software) which, when executed by processing unit 110, observes characteristics associated with a curve detected by system 100 (e.g., via execution of curve recognition module 1402). Processing unit 110 may observe characteristics associated with a detected curve by analyzing one or more sets of images acquired by one or more of image capture devices 122, 124, and 126 and/or using map and/or position data (e.g., data stored in map database 160). The analysis may yield information associated with the curve, such as curve radius 1308, lane width 1306, a degree of curvature, a rate of change in curvature, a degree of banking, a length or arc length of the curve, and the like. These characteristics may include estimated values (e.g., curve characteristics calculated using preexisting data and/or mathematical models based on such data) and actual values (e.g., curve characteristics calculated by analyzing captured images of the curve). Based on the analysis, processing unit 110 may cause a change in velocity of vehicle 200. For example, processing unit 110 may cause vehicle 200 to reduce its speed and/or adjust its direction by a particular angle in view of a high rate of change in curvature associated with a curve located 25 meters ahead of vehicle 200.

[0262] In one embodiment, velocity module 1406 may store software instructions configured to analyze data from one or more computing and electromechanical devices configured to determine a target velocity and cause a change in velocity of vehicle 200 to the target velocity. For example, processing unit 110 may execute velocity module 1406 to calculate a target velocity for vehicle 200 based on data derived from execution of curve recognition module 1402 and characteristic observation module 1404. Such data may include, for example, an initial target position and initial velocity, an updated target position and updated velocity, a final target position and final velocity, and the like. In addition, processing unit 110 may calculate a velocity for vehicle 200 based on input from other systems of vehicle 200, such as a throttling system 220, braking system 230, and/or steering system 240 of vehicle 200. Based on the calculated target velocity, processing unit 110 may transmit electronic signals (e.g., via a controller area network bus ("CAN bus")) to throttling system 220, braking system 230, and/or steering system 240 of vehicle 200 to trigger a change in the speed and/or direction of vehicle 200 by, for example, physically depressing the brake, easing up off the accelerator of vehicle 200, or steering vehicle 200 in a particular direction (e.g., at a particular angle). An increase in speed may be associated with a corresponding acceleration (e.g., between 0.2 m/sec^2 and 3.0 m/sec^2). Conversely, a decrease in speed may be associated with a corresponding deceleration. In addition, the acceleration or deceleration may be based on the road type (e.g., highway, city street, country road, etc.), the presence of any speed constraints nearby (e.g., sharp curves, traffic lights), as well as a road width or lane width 1306. For purposes of this disclosure, deceleration may refer to an acceleration having a negative value.

[0263] FIG. 15 is a flow chart showing an exemplary process 1500 for controlling the velocity of a vehicle based on a detected curve and observed characteristics of the curve and/or map data regarding

IPR2025-01034
Tesla EX1002 Page 1716

the curve consistent with disclosed embodiments. At step 1510, processing unit 110 may receive a plurality of images via data interface 128 between processing unit 110 and image acquisition unit 120. For instance, a camera included in image acquisition unit 120 (such as image capture device 122) may capture a plurality of images and transmit them over a digital connection (e.g., USB, wireless, Bluetooth, etc.) to processing unit 110. In some embodiments, processing unit 110 may receive more than one plurality of images via a plurality of data interfaces. For example, processing unit 110 may receive a plurality of images from each of image capture devices 122, 124, 126, each of which may have an associated data interface for communicating data to processing unit 110. The disclosed embodiments are not limited to any particular data interface configurations or protocols.

[0264] At step 1520, processing unit 110 may execute curve recognition module 1502 to detect a curve located ahead of vehicle 200 based on, for example, map and/or position data (e.g., data stored in map database 160). Such data may indicate the location of a curve that is present on a given road. The data may indicate the absolute position of a particular curve (e.g., via GPS coordinates) or the relative position of the curve (e.g., by describing the curve relative to vehicle 200, road sign 1302, traffic light 1304, and/or other descriptive landmarks). In some embodiments, processing unit 110 may execute curve recognition module 1502 to detect the curve by analyzing the plurality of images. The analysis may be conducted using techniques described in connection with FIGS. 5A-5D and 6, above.

[0265] At step 1530, processing unit 110 may execute velocity module 1406 to determine an initial target velocity for vehicle 200 based on, for example, data derived from execution of curve recognition module 1402. The initial target velocity may reflect a speed and a direction for vehicle 200 to safely enter an upcoming curve and may be determined using techniques described in connection with FIG. 14, above. For example, velocity module 1406 may determine the initial target velocity based on known or estimated characteristics associated with the upcoming curve, such as the curve radius 1308 and the degree of banking. Velocity module 1406 may calculate the initial target velocity in accordance with mathematical models and/or formulae and based on various constraints. In some embodiments, for example, velocity module 1406 may determine the initial target velocity based on the presence of traffic lights (such as traffic light 1304) before, during, or after a curve, weather conditions (e.g., light rain, heavy rain, windy, clear, etc.), road conditions (e.g., paved road, unpaved road, potholes, etc.), posted speed limits, the presence of vehicles or pedestrians nearby, etc. The initial target velocity may also be based on a lateral acceleration limit associated with vehicle 200. In some embodiments, the lateral acceleration limit may be in the range of 0.2 m/sec^2 and 3.0 m/sec^2 and may be adjusted depending on the curve characteristics, the road width, or lane width 1306. Additionally, the initial target velocity may be based on a focal range associated with one or more of cameras, such as image capture devices 122 and 124.

[0266] For example, velocity module 1406 may determine the initial target velocity based on the radius of curvature of the road ahead of vehicle 200. Velocity module 1406 may determine the radius of curvature at various distances from vehicle 200 and store the information in a vector $R(1:n)$. In one embodiment, velocity module 1406 may determine the radius of curvature at: (1) the current position of

IPR2025-01034
Tesla EX1002 Page 1717

vehicle 200, (2) a distance D_{end} from vehicle 200, where D_{end} represents the distance ahead of vehicle 200 at which knowledge of the road characteristics allows system 100 to control navigational responses in vehicle 200 such that the driver may feel comfortable, and (3) at incremental distances from vehicle 200, such as every 1 meter, etc. The value of distance D_{end} may depend on the current speed of vehicle 200, V_{ego}. For example, the greater the value of V_{ego} (e.g., the faster vehicle 200 is traveling), the greater the value of D_{end} (e.g., the longer the distance may be taken into account to provide system 100 with sufficient time to provide a navigational response, such as comfortably reducing the speed of vehicle 200 based on an approaching sharp turn or curve). In one embodiment, D_{end} may be calculated according to the following equation: $D_{end} = (V_{ego}^2 / 2) / (0.7 / 40 * V_{ego} + 0.5)$. Thus, the vector $D(1{:}n) = [1{:}1{:}n]$, where $n = \text{floor}(D_{end})$.

[0267] In some embodiments, velocity module 1406 may determine the initial target velocity based on a lateral acceleration constraint, a_{max}, e.g., the maximum allowed lateral acceleration. a_{max} may fall in the range of 1.5 to 3.5 meters / sec^2. Based on a_{max} and the radius of curvature vector R (discussed above), velocity module 1406 may limit the speed of vehicle 200 (e.g., at different points or distances from the current position of vehicle 200) to a speed v_{lim}, calculated as: $v_{lim}(1{:}n) = \text{sqrt}(a_{max} * R(1{:}n))$. In addition, a deceleration constraint that follows from the determination of v_{lim} may be calculated as: $dec_{lim} = \min\{((v_{lim}(1{:}n)^2 - V_{ego}^2) / 2), \max\{d_{min}, D(1{:}n) - 2 * V_{ego}\}\}$, where d_{min} is equal to 40 meters. The value of d_{min} may represent a point at which deceleration feels comfortable for the driver of vehicle 200.

[0268] In some embodiments, velocity module 1406 may determine the initial target velocity based on a curvature slew rate constraint, $slew_{max}$, which may be based on the curvature rate of change. $slew_{max}$ may fall in the range of 0.5 to 1.5 meters / sec^3. Velocity module 1406 may determine v_{lim} according the following equation: $v_{lim}(1{:}n) = (slew_{max} / \text{abs}\{\text{diff}\{1 / R(1{:}n)\}\})^{1/3}$. Further, velocity module 1406 may determine dec_{lim} according to the equation: $dec_{lim} = \min\{((v_{lim}(1{:}n)^2 - V_{ego}^2) / 2), \max\{d_{min}, D(1{:}n) - 2 * V_{ego}\}\}$, where d_{min} is equal to 40 meters.

[0269] In some embodiments, velocity module 1406 may determine a comfort constraint such that the driver of vehicle 200 is comfortable while vehicle 200 is undergoing various navigational responses, such as making a turn or navigating a curve. Velocity module 1406 may determine v_{lim} according to the following equation: $v_{lim}(1{:}n) = 4/500 * R(1{:}n) + 22.5$. Further, velocity module 1406 may determine dec_{lim} according to the equation: $dec_{lim} = \min\{((v_{lim}(1{:}n)^2 - V_{ego}^2) / 2), \max\{d_{min}, D(1{:}n) - 2 * V_{ego}\}\}$, where d_{min} is equal to 40 meters.

[0270] Velocity module 1406 may merge the three constraints determined above—the lateral acceleration constraint, the curvature slew rate constraint, and comfort constraint—by using the smallest value of dec_{lim} calculated in association with each constraint. After merging the constraints, velocity module 1406 may arrive at the initial target velocity by determining how much to adjust the speed of vehicle 200, denoted v_{com}, according to the following equation: $v_{com} = v_{com(prev)} + dec_{lim} * \Delta t$, where $v_{com(prev)}$ represents the prior speed of vehicle 200 (e.g., a previously determined speed, the speed of vehicle 200 prior to any adjustment by velocity module 1406, etc.), and Δt represents the time between the determination of v_{com} and $v_{com(prev)}$.

IPR2025-01034
Tesla EX1002 Page 1718

[0271] At step 1540, processing unit 110 may execute velocity module 1406 to adjust a velocity of vehicle 200 to the initial target velocity determined at step 1530. Based on the current velocity of vehicle 200 and the initial target velocity determined at step 1530, processing unit 110 may transmit electronic signals to throttling system 220, braking system 230, and/or steering system 240 of vehicle 200 to change the velocity of vehicle 200 to the initial target velocity. Further, one or more actuators may control throttling system 220, braking system 230, and/or steering system 240. For example, processing unit 110 may transmit electronic signals that cause system 100 to physically depress the brake by a predetermined amount or ease partially off the accelerator of vehicle 200. Further, processing unit 110 may transmit electronic signals that cause system 100 to steer vehicle 200 in a particular direction. In some embodiments, the magnitude of acceleration (or de-acceleration) may be based on the difference between the current velocity of vehicle 200 and the initial target velocity. Where the difference is large (e.g., the current velocity is 10 km/hr greater than the initial target velocity), for example, system 100 may change the current velocity by braking in a manner that maximizes deceleration and results in vehicle 200 achieving the initial target velocity in the shortest amount of time safely possible. Alternatively, system 100 may apply the brakes in a manner that minimizes deceleration and results in vehicle 200 achieving the initial target velocity gradually. More generally, system 100 may change the current velocity to the initial target velocity according to any particular braking profile (e.g., a braking profile calling for a high level of braking for the first two seconds, and a low level of braking for the subsequent three seconds). The disclosed embodiments are not limited to any particular braking profile or manner of braking.

[0272] At step 1550, processing unit 110 may execute characteristic observation module 1404 to determine one or more characteristics of a curve located ahead of vehicle 200 based on, for example, analysis of the plurality of images conducted using techniques described in connection with FIGS. 5A-5D, above. The characteristics may include, for example, estimated and/or actual values associated with curve radius 1308, a road width or lane width 1306, a degree of curvature, a rate of change in curvature, a degree of banking, and the like. The characteristics may also include, for example, information conveyed by one or more road signs (such as road sign 1302). Furthermore, the characteristics may include the length or arc length of the detected curve, which may be a function of the speed of vehicle 200 as it approaches the curve. Processing unit 110 may execute characteristic observation module 1404 to calculate values associated with these characteristics (e.g., curve radius 1308, the degree of curvature, the rate of change in curvature, the arc length of the curve, etc.) based on mathematical models and/or formulae. In some embodiments, processing unit 110 may execute characteristic observation module 1404 to construct a mathematical model expressing the curvature of the curve as a function of distance (e.g., distance traveled). Such a model may be subject to constraints such as a maximum lateral acceleration constraint (e.g., in the range of 1.5 to 3.0 m/sec^2) and/or a maximum lateral acceleration derivative constraint (e.g., in the range of 0.8 to 1.2 m/sec^2). These constraints may yield a maximum speed for vehicle 200 as a function of distance traveled.

IPR2025-01034
Tesla EX1002 Page 1719

[0273] At step 1560, processing unit 110 may execute velocity module 1406 to calculate an updated target velocity based on the characteristics determined at step 1550. The updated target velocity may reflect an updated speed and/or direction for vehicle 200 to safely perform any combination of: (i) entering an upcoming curve, (ii) navigating through a curve, or (iii) exiting a curve. The updated target velocity may be determined using techniques described in connection with FIG. 14 and step 1530, above. For example, velocity module 1406 may determine the updated target velocity based on characteristics associated with a curve and mathematical models and/or formulae.

[0274] At step 1570, processing unit 110 may execute velocity module 1406 to adjust the velocity of vehicle 200 to the updated target velocity determined at step 1560. This adjustment may be accomplished using techniques described in connection with step 1540, above. For example, based on the current velocity of vehicle 200 and the updated target velocity determined at step 1560, processing unit 110 may transmit electronic signals (e.g., via a CAN bus) to throttling system 220, braking system 230, and/or steering system 240 of vehicle 200 to change the velocity of vehicle 200 to the updated target velocity. At this point, the current velocity of vehicle 200 is not necessarily the same as the initial target velocity determined at step 1530. For example, processing unit 110 may have determined the updated target velocity at step 1560 while in the process of adjusting the velocity of vehicle 200 to the initial target velocity. This may be true in the case where the difference in the velocity of vehicle 200 and the initial target velocity is large (e.g., greater than 10 km/hr) and the associated acceleration is small.

[0275] In some embodiments, system 100 may make regular updates to the target velocity based on continued observations of characteristics of a curve (e.g., based on image data depicting portions of the curve that vehicle 200 is approaching). Additionally, after system 100 has navigated vehicle 200 through a curve, system 100 may cause vehicle 200 to accelerate to a new target velocity suitable for traveling a segment of the road that does not have curves, as determined by analyzing map data, positional data, and/or image data acquired by system 100.

[0276] Mimicking A Leading Vehicle

[0277] System 100 may provide driver assist functionality that causes vehicle 200 to mimic (or decline to mimic) a leading vehicle in different scenarios, such as when the leading vehicle switches lanes, accelerates, or makes a turn. For example, system 100 may be configured to detect the leading vehicle by analyzing a plurality of images and determine one or more actions taken by the leading vehicle. In some scenarios, such as when the leading vehicle is turning at an intersection, system 100 may be configured to cause vehicle 200 to decline to mimic the turn. In other scenarios, such as when the leading vehicle is turning at an intersection without changing lanes within the intersection, system 100 may be configured to cause vehicle 200 to mimic the turn. System 100 may also be configured to cause vehicle 200 to mimic one or more actions of the leading vehicle based on a navigation history of the leading vehicle.

[0278] FIGS. 16A and 16B are diagrammatic representations of a primary vehicle 200a mimicking one or more actions of a leading vehicle 200b on road 1600a, consistent with the disclosed embodiments. As illustrated in FIGS. 16A and 16B, primary vehicle 200a may be trailing leading vehicle

IPR2025-01034
Tesla EX1002 Page 1720

200b while traveling in the same lane of road 1600a. The lane may have a left edge 1620, a right edge 1630, and a midpoint 1610, with w_1 and w_2 indicating the left and right halves of the lane, respectively. Primary vehicle 200a and leading vehicle 200b may be positioned in the lane such that neither vehicle is centered on the midpoint 1610. As shown in FIG. 16A, for example, primary vehicle 200a may be centered to the right of midpoint 1610 such that the distance c_1 between primary vehicle 200a and left edge 1620 is greater than the distance c_2 between primary vehicle 200a and right edge 1630. In contrast, leading vehicle 200b may be centered to the left of midpoint 1610 such that the distance c_3 between leading vehicle 200b and left edge 1620 is less than the distance c_4 between leading vehicle 200b and right edge 1630. Different configurations of the positions of primary vehicle 200a and leading vehicle 200b are possible. For example, primary vehicle 200a and leading vehicle 200b may be positioned anywhere on road 1600a. Further, although FIG. 16A depicts leading vehicle 200b as having a camera system, the disclosed embodiments are not limited to a configuration in which leading vehicle 200b includes a camera system.

[0279] System 100 of primary vehicle 200a may cause primary vehicle 200a to mimic one or more actions of leading vehicle 200b. As shown in FIG. 16B, for example, primary vehicle 200a may mimic a lane shift performed by leading vehicle 200b. After mimicking the lane shift, distance c_1 may be equal to distance c_3, and distance c_2 may be equal to distance c_4. In some embodiments, primary vehicle 200a may mimic a lane shift performed by leading vehicle 200b in a way such that distances c_1 and c_3, and c_2 and c_4, are unequal. For example, in the case where primary vehicle 200a mimics a leftward lane shift of primary vehicle 200b and is positioned (after the lane shift) to the left of primary vehicle 200a, c_1 will be less than c_3 and c_2 will be greater than c_4. Alternatively, where primary vehicle 200a mimics a leftward lane shift of primary vehicle 200b and is positioned to the right of primary vehicle 200a, c_1 will be greater than c_3 and c_2 will be less than c_4.

[0280] FIGS. 16C and 16D are diagrammatic representations of a primary vehicle 200a mimicking one or more actions of a leading vehicle 200b on road 1600b, consistent with the disclosed embodiments. As illustrated in FIG. 16C, primary vehicle 200a may be traveling behind leading vehicle 200b, which may make a left turn at an intersection. System 100 of primary vehicle 200a may cause primary vehicle 200a to mimic the left turn of leading vehicle 200b, as shown in FIG. 16D. System 100 may cause primary vehicle 200a to mimic the left turn based on various factors, such as whether leading vehicle 200b changes lanes while turning within the intersection, the navigation history associated with leading vehicle 200b, the relative difference in speed between primary vehicle 200a and leading vehicle 200b, and the like. Additionally, primary vehicle 200a may mimic leading vehicle 200b under various conditions, such as based on whether leading vehicle 200b is traveling along the same route or the same portion of a route that primary vehicle 200a is traveling along. Further detail regarding scenarios in which system 100 may cause primary vehicle 200a to mimic one or more actions of leading vehicle 200b are described in connection with FIGS. 17-22, below.

[0281] In some embodiments, system 100 may be configured to determine whether to mimic a particular movement of a leading vehicle. For example, system 100 may determine that certain

IPR2025-01034
Tesla EX1002 Page 1721

movements of the leading vehicle do not need to be mimicked because the movements do not affect the course of the leading vehicle. For example, system 100 may determine that small changes in movements, such as moving within a particular lane, do not need to be mimicked. In other embodiments, system 100 may implement a smoothing operation to filter out small movements of a leading vehicle. The smoothing operation may cause the primary vehicle to implement more significant and/or important movements (e.g., changing lanes) of a leading vehicle while filtering out smaller movements not affecting the overall course of the leading vehicle.

[0282] FIG. 17 is an exemplary block diagram of a memory configured to store instructions for performing one or more operations consistent with the disclosed embodiments. As shown in FIG. 17, memory 140 may store a lane constraint module 1702, an action detection module 1704, and an action response module 1706. The disclosed embodiments are not limited to any particular configuration of memory 140. Further, processing unit 110 may execute the instructions stored in any of modules 1702-1706 included in memory 140.

[0283] In one embodiment, lane constraint module 1702 may store software instructions (such as computer vision software) which, when executed by processing unit 110, determine one or more constraints associated with a lane that primary vehicle 200a is traveling in. The lane constraints may include a midpoint 1610, a left edge 1620, and a right edge 1630 of the lane. The lane constraints may also include one or more lines or other symbols marked on the surface of road 1600a or 1600b. Processing unit 110 may execute lane constraint module 1702 to determine the constraints by, for example, analyzing one or more sets of images and/or using map and/or position data (e.g., data stored in map database 160). The image sets may be acquired by one or more of image capture devices 122, 124, and 126. Based on the analysis, system 100 (e.g., via processing unit 110) may cause primary vehicle 200a to travel within a lane defined by left edge 1620 and right edge 1630. In some embodiments, system 100 may cause primary vehicle 200a to move away from left edge 1620 or right edge 1630 if one of distance c_1 or c_2 is less than a predetermined threshold.

[0284] In one embodiment, action detection module 1704 may store software instructions (such as computer vision software) which, when executed by processing unit 110, detects one or more actions taken by leading vehicle 200b traveling in front of primary vehicle 200a. Leading vehicle 200b may be traveling in the same or different lane as primary vehicle 200a. Processing unit 110 may execute action detection module 1704 to detect one or more actions taken by leading vehicle 200b by, for example, analyzing one or more sets of images acquired by one or more of image capture devices 122, 124, and 126. Based on the analysis, processing unit 110 may determine, for example, that leading vehicle 200b has shifted lanes, made a turn, accelerated, decelerated, applied its brakes, and/or the like. As another example, leading vehicle 200b may perform a maneuver such that a first offset distance on a side of leading vehicle 200b adjacent to a first lane constraint is different from a second offset distance on a side of leading vehicle 200b adjacent to a second lane constraint. For example, processing unit 110 may perform the analysis based on the techniques described in connection with FIGS. 5A-5D, above.

IPR2025-01034
Tesla EX1002 Page 1722

[0285] In one embodiment, action response module 1706 may store software instructions (such as computer vision software) which, when executed by processing unit 110, determines one or more actions for primary vehicle 200a to take based on one or more actions taken by leading vehicle 200b detected by system 100 (e.g., via execution of action detection module 1704). For example, processing unit 110 may execute action response module 1706 to determine whether to mimic one or more actions of leading vehicle 200b. This determination may be based on the nature of leading vehicle 200b's actions (e.g., turn, lane shift, etc.), information associated with primary vehicle 200a (e.g., speed, distance c_1 and c_2 from the lane edges, etc.), road and environmental conditions (e.g., potholes, heavy rain or wind, etc.), and the like. In the case where processing unit 110 determines to mimic one or more actions of leading vehicle 200b, processing unit 110 may accomplish this by, for example, transmitting electronic signals (e.g., via a CAN bus) to throttling system 220, braking system 230, and/or steering system 240 of primary vehicle 200a to trigger a turn, lane shift, change in speed, and/or change in direction of primary vehicle 200a. Processing unit 110 may use the techniques described in connection with FIGS. 4-7, above, to cause primary vehicle 200a to mimic the one or more actions. To mimic the one or more actions, system 100 may provide control signals to one or more of throttling system 220, braking system 230, and steering system 240 to navigate vehicle 200 (e.g., by causing an acceleration, a turn, a lane shift, etc.). Further, one or more actuators may control throttling system 220, braking system 230, and/or steering system 240.

[0286] FIG. 18 is a flow chart showing an exemplary process for causing primary vehicle 200a to mimic one or more actions of leading vehicle 200b consistent with disclosed embodiments. At step 1810, processing unit 110 may receive a plurality of images via data interface 128 between processing unit 110 and image acquisition unit 120. For instance, a camera included in image acquisition unit 120 (such as image capture device 122) may capture a plurality of images and transmit them over a digital connection (e.g., USB, wireless, Bluetooth, etc.) to processing unit 110. In some embodiments, processing unit 110 may receive more than one plurality of images via a plurality of data interfaces. For example, processing unit 110 may receive a plurality of images from each of image capture devices 122, 124, 126, each of which may have an associated data interface for communicating data to processing unit 110. The disclosed embodiments are not limited to any particular data interface configurations or protocols.

[0287] At steps 1820 and 1830, processing unit 110 may execute lane constraint module 1702 to determine constraints for each side of primary vehicle 200a associated with a lane that primary vehicle 200a is traveling in. Processing unit 110 may determine the constraints by analyzing the images received at step 1810. Thus, at step 1820, processing unit 110 may determine a first lane constraint on a first side of primary vehicle 200a (e.g., the distance between the left side of primary vehicle 200a and left edge 1620 of the lane, c_1) and, at step 1830, a second lane constraint on a second side opposite the first side (e.g., the distance between the right side of primary vehicle 200a and right edge 1620 of the lane, c_2). In some embodiments, processing unit 110 may determine the constraints by using map and/or position data (e.g., data stored in map database 160) indicating the position of primary vehicle 200a relative to midpoint 1610, left edge 1620, and right edge 1630 of the lane. Processing unit 110 may determine the

IPR2025-01034
Tesla EX1002 Page 1723

constraints based on both an analysis of the images received at step 1810 and map and/or position data; doing so may increase the confidence level associated with the constraints.

[0288] At step 1840, processing unit 110 may execute lane constraint module 1702 to cause primary vehicle 200a to travel within the lane constraints determined at steps 1820 and 1830. For example, the left side of primary vehicle 200a may be positioned to the left of left edge 1620, or the right side of primary vehicle 200a may be positioned to the right of right edge 1630. In such a scenario, processing unit 110 may transmit electronic signals (e.g., via a CAN bus) to throttling system 220, braking system 230, and/or steering system 240 of primary vehicle 200a to cause primary vehicle 200a to adjust its position and travel within the lane constraints.

[0289] At step 1850, processing unit 110 may execute action detection module 1704 to locate a leading vehicle 200b within the images received at step 1810 by analyzing the images. Processing unit 110 may detect the presence of vehicles in the images using the techniques described in connection with FIGS. 5A and 5B, above. For each detected vehicle, processing unit 110 may construct a multi-frame model of the detected vehicle's position, velocity (e.g., speed and direction), and acceleration relative to primary vehicle 200a. Processing unit 110 may use the techniques described in connection with FIGS. 5A and 5B, above, to construct such a model. In addition, processing unit 110 may determine a lane of travel associated with each detected vehicle, based on, for example, lane or other road markings and lane constraints determined at steps 1820 and 1830. Processing unit 110 may determine leading vehicle 200b to be the detected vehicle that is closest to, and is traveling in the same lane as, primary vehicle 200a. At step 1860, processing unit 110 may execute action detection module 1704 to determine one or more actions taken by the leading vehicle 200b detected within the images at step 1850. For example, processing unit 110 may determine that leading vehicle 200b has shifted lanes, made a turn, accelerated, decelerated, and/or the like. In addition, processing unit 110 may analyze the images to determine characteristics associated with leading vehicle 200b, such as its speed and position (e.g., relative to primary vehicle 200a). These determinations may be based on the techniques described in connection with FIGS. 5A and 5B, above. In some embodiments, processing unit 110 may analyze the images to determine characteristics associated with an action performed by leading vehicle 200b. For example, where leading vehicle 200b makes a turn, processing unit 110 may determine position information for leading vehicle 200b right before it begins the turn, position information for leading vehicle 200b as it completes the turn, a turning radius, and a speed profile describing changes in speed (e.g., over time) for leading vehicle 200b as it makes the turn.

[0290] At step 1870, processing unit 110 may execute action response module 1706 to cause primary vehicle 200a to mimic the one or more actions of leading vehicle 200b determined at step 1850. For example, processing unit 110 may transmit electronic signals (e.g., via a CAN bus) to throttling system 220, braking system 230, and/or steering system 240 of primary vehicle 200a to trigger a turn, lane shift, change in speed, and/or change in direction of primary vehicle 200a. In addition, processing unit 110 may construct a set of path points to guide changes in position and speed for primary vehicle 200a. The path points may be based on lane marks (e.g., midpoint 1610, left edge 1620, right edge 1630,

IPR2025-01034
Tesla EX1002 Page 1724

etc.) represented by a polynomial (e.g., of the third-degree) and target coordinates associated with a target vehicle, such as leading vehicle 200b. Processing unit 110 may adjust the coefficients of the polynomial so that the path points pass through the target coordinates. Processing unit 110 may also offset the path points (e.g., relative to left edge 1620 and right edge 1630) based on a predetermined offset amount. As processing unit 110 adjusts the polynomial coefficients and offsets the path points, processing unit 110 may also calculate local curvature information for each of the resulting segments formed between the path points.

[0291] In some embodiments, processing unit 110 (e.g., via execution of action response module 1706) may cause primary vehicle 200a to mimic leading vehicle 200b within certain position, speed, and/or acceleration constraints associated with the two vehicles. For example, the constraints may require a predetermined minimum distance (e.g., a safety distance) between primary vehicle 200a and leading vehicle 200b or a predetermined maximum difference in speed and/or acceleration between the vehicles. Thus, if mimicking an action performed by leading vehicle 200b would violate one or more constraints (e.g., mimicking an acceleration would result in primary vehicle 200a being too close to leading vehicle 200b), processing unit 110 may cause primary vehicle 200a to decline to mimic the one or more actions of leading vehicle 200b. In addition, even while mimicking an action performed by leading vehicle 200b (e.g., a lane shift), processing unit 110 may cause primary vehicle 200a to follow leading vehicle 200b's speed profile and maintain a predetermined distance or a safety distance from leading vehicle 200b. Processing unit 110 may accomplish this by causing primary vehicle 200a to: (i) continuously close the distance gap from leading vehicle 200b when the gap is greater than the predetermined minimum distance, (ii) continuously close the gap between the speeds of primary vehicle 200a and leading vehicle 200b, and (iii) match the acceleration of leading vehicle 200b to the extent it is consistent with predetermined constraints. To control the extent to which of these actions should be performed, processing unit 110 may associate each action with weights in real-time based on the current and predicted distance to leading vehicle 200b. Thus, for example, as the distance to leading vehicle 200b decreases more weight may be put on decelerating rather than matching the acceleration of leading vehicle 200b.

[0292] As another example, in the case where primary vehicle 200a is approaching leading vehicle 200b at a speed greater than the speed of leading vehicle 200b, processing unit 110 may cause primary vehicle 200a to gradually slow down such that, when the distance between the two vehicles equals a predetermined safety distance such as a minimum following distance, the speed of the two vehicles is the same. In another example, where a leading vehicle 200b abruptly appears in front of primary vehicle 200a, causing the distance between the two vehicles to be less than the minimum following distance, processing unit 110 may cause primary vehicle 200a to gradually slow down to avoid approaching leading vehicle 200b any closer while at the same increasing the distance between the vehicles until it reaches the minimum following distance.

[0293] FIG. 19 is a flow chart showing an exemplary process 1900 for causing primary vehicle 200a to decline to mimic a turn of leading vehicle 200b, consistent with disclosed embodiments. At step

IPR2025-01034
Tesla EX1002 Page 1725

1910, processing unit 110 may receive a plurality of images via data interface 128 between processing unit 110 and image acquisition unit 120, as described in connection with step 1810 of FIG. 18, above. At step 1920, processing unit 110 may execute action detection module 1704 to locate a leading vehicle 200b within the images received at step 1910 by analyzing the images, as described in connection with step 1850 of FIG. 18, above. At step 1925, processing unit 110 may execute action detection module 1704 to determine whether leading vehicle 200b is turning at an intersection, using the techniques described in connection with step 1860 of FIG. 18, above. If leading vehicle 200b is determined to be turning at the intersection (step 1925, yes), processing unit 110 may cause primary vehicle 200a to decline to mimic the turn of leading vehicle 200b at step 1930. Otherwise (step 1925, no), process 1900 concludes.

[0294] FIG. 20 is a flow chart showing an exemplary process 2000 for causing primary vehicle 200a to mimic or decline a turn of leading vehicle 200b, consistent with disclosed embodiments. At step 2010, processing unit 110 may receive a plurality of images via data interface 128 between processing unit 110 and image acquisition unit 120, as described in connection with step 1810 of FIG. 18, above. At step 2020, processing unit 110 may execute action detection module 1704 to locate a leading vehicle 200b within the images received at step 2010 by analyzing the images, as described in connection with step 1850 of FIG. 18, above. At step 2025, processing unit 110 may execute action detection module 1704 to determine whether leading vehicle 200b is turning at an intersection, using the techniques described in connection with step 1860 of FIG. 18, above. If leading vehicle 200b is determined to be turning at the intersection (step 2025, yes), at step 2035, processing unit 110 may execute action detection module 1704 to determine whether leading vehicle 200b is changing lanes within the intersection, using the techniques described in connection with step 1860 of FIG. 18, above. Otherwise (step 2025, no), process 2000 concludes. If leading vehicle 200b is determined to be changing lanes within the intersection (step 2035, yes), processing unit 110 may cause primary vehicle 200a to decline to mimic the turn of leading vehicle 200b at step 2050. Otherwise (step 2035, no), processing unit 110 may cause primary vehicle 200a to mimic the turn of leading vehicle 200b at step 2040.

[0295] FIG. 21 is a flow chart showing another exemplary process 2100 for causing primary vehicle 200a to mimic one or more actions of a first leading vehicle, consistent with disclosed embodiments. At step 2110, processing unit 110 may receive a plurality of images via data interface 128 between processing unit 110 and image acquisition unit 120, as described in connection with step 1810 of FIG. 18, above. At steps 2120 and 2130, processing unit 110 may execute action detection module 1704 to locate a first and second leading vehicle within the images received at step 2110 by analyzing the images, as described in connection with step 1850 of FIG. 18, above. At step 2135, processing unit 110 may execute action detection module 1704 to determine whether the first leading vehicle path has a lower turning radius than the second leading vehicle path, using the techniques described in connection with step 1860 of FIG. 18, above. If the first leading vehicle path is determined to have a lower turning radius than the second leading vehicle path (step 2135, yes), processing unit 110 may cause primary vehicle 200a to mimic the turn of the first leading vehicle at step 2140. Otherwise (step 2135, no), process 2100 concludes.

IPR2025-01034
Tesla EX1002 Page 1726

[0296] FIG. 22 is a flow chart showing an exemplary process 2200 for causing primary vehicle 200a to mimic one or more actions of leading vehicle 200b based on a navigation history, consistent with disclosed embodiments. At step 2210, processing unit 110 may receive a plurality of images via data interface 128 between processing unit 110 and image acquisition unit 120, as described in connection with step 1810 of FIG. 18, above. At step 2220, processing unit 110 may execute action detection module 1704 to locate a leading vehicle 200b within the images received at step 2210 by analyzing the images, as described in connection with step 1850 of FIG. 18, above.

[0297] At step 2230, processing unit 110 may determine position information for leading vehicle 200b by analyzing the images received at step 2210. Position information for leading vehicle 200b may indicate the position of leading vehicle 200b relative to primary vehicle 200a. Processing unit 110 may analyze the images to derive position information for leading vehicle 200b and one or more actions taken by leading vehicle 200b by using the techniques described in connection with FIGS. 5A-5D, above.

[0298] At step 2240, processing unit 110 may compare the position information for leading vehicle 200b determined at step 2230 to predetermined map data (e.g., data stored in map database 160). For example, by comparing the position information to predetermined map data, processing unit 110 may derive position coordinates for leading vehicle 200b. In addition, processing unit 110 may use the predetermined map data as an indicator of a confidence level associated with the position information determined at step 2230.

[0299] At step 2250, processing unit 110 may create a navigation history associated with leading vehicle 200b by, for example, tracking the actions taken by leading vehicle 200b. Processing unit 110 may associate the actions taken by leading vehicle 200b (e.g., determined from analysis of the images at step 2230) with predetermined map data from step 2240. Thus, the navigation history may indicate that leading vehicle 200b performed certain actions (e.g., a turn, a lane shift, etc.) at certain position coordinates.

[0300] At step 2260, processing unit 110 may execute action response module 1706 to determine whether to cause primary vehicle 200a to mimic one or more actions of leading vehicle 200b based on the navigation history created at step 2250 and using the techniques described in connection with step 1870 of FIG. 18, above. For example, processing unit 110 (e.g., via action response module 1706) may cause primary vehicle 200a to mimic a turn of leading vehicle 200b, even where no turn is detected from analysis of the images (e.g., at step 2230), when the navigation history indicates that leading vehicle 200b has successfully navigated at least one prior turn. More generally, processing unit 110 may cause primary vehicle 200a to mimic an action taken by leading vehicle 200b in cases where the navigation history indicates the leading vehicle 200b had successfully performed such an action.

[0301] Navigating a Vehicle to Pass Another Vehicle

[0302] System 100 may provide driver assist functionality that monitors the vicinity around vehicle 200 and aborts lane changes in the event that the lane change is deemed to be at risk of causing a collision, such as with another vehicle (e.g., a target vehicle). For example, system 100 may enable vehicle 200 to complete a pass of a target vehicle if the target vehicle is determined to be in a different

IPR2025-01034
Tesla EX1002 Page 1727

lane than vehicle 200. If, before completion of a pass, system 100 determines that the target vehicle is entering the lane in which vehicle 200 is traveling, system 100 may cause vehicle 200 to abort the pass. For example, aborting the pass may include causing vehicle 200 to brake or causing vehicle 200 to stop accelerating.

[0303] As illustrated in FIG. 23, vehicle 200 may travel on roadway 2300. Vehicle 200 may be equipped with system 100 and may implement any of the disclosed embodiments for identifying lane constraints and operating vehicle 200 within the lane constraints. System 100 may also facilitate lane changes made by vehicle 200. For example, system 100 may determine whether circumstances allow vehicle 200 to safely change lanes and, if the circumstances change during the lane change, cause vehicle 200 to abort lane change.

[0304] As shown in FIG. 23 and as previously discussed with respect to FIG. 8, vehicle 200 may include first vehicle side 802, which may be first distance 805 from a first lane constraint 2302. Similarly, vehicle 200 may include second vehicle side 812 opposite from first vehicle side 802, and second vehicle side 812 may be second distance 815 from a second lane constraint 2304. In this manner, first lane constraint 810 and second lane constraint 2304 may define a lane 2330 within which vehicle 200 may travel.

[0305] System 100 may determine first lane constraint 2302 and second lane constraint 2304 based on a plurality of images acquired by one or more of image capture devices 122–126. According to some embodiments, first lane constraint 2302 and/or second lane constraint 2304 may be identified by visible lane boundaries, including lines marked on a road surface. Additionally or alternatively, first lane constraint 2302 and/or second lane constraint 2304 may include an edge of a road surface. According to some embodiments, system 100 may determine first lane constraint 2302 and/or second lane constraint 2304 by identifying a midpoint of a road surface width 2320 (or any other suitable road feature that vehicle 200 may use as a navigation reference). System 100 may identify lane constraints in this manner when, for example, lines designating road lanes are not painted or otherwise labeled.

[0306] When passing a target vehicle 2310, the lane change of vehicle 200 may be complicated by a change in the trajectory of target vehicle 2330. Thus, system 100 may identify target vehicle 2310 based on an analysis of a plurality of images acquired by one or more of image capture devices 122-126. System 100 may also identify second lane 2340 in which target vehicle 2310 is traveling. Further, system 100 may determine whether second lane 2340 is different than lane 2330 in which vehicle 200 is traveling. If second lane 2340 is different than lane 2330, system 100 may be configured to enable vehicle 200 to pass target vehicle 2310.

[0307] System 100 may also monitor target vehicle 2310 based on the plurality of images. For example, system 100 may monitor a position of target vehicle 2310, such as monitoring its position relative to vehicle 200, relative to first lane constraint 2302 and/or second lane constraint 2304, an absolute position, or relative to another reference point. Additionally or alternatively, monitoring a position of target vehicle 2310 may include estimating a speed of target vehicle 2310.

IPR2025-01034
Tesla EX1002 Page 1728

[0308] If system 100 determines that target vehicle 2310 is entering lane 2330 in which vehicle 200 is traveling, system 100 may cause vehicle 200 to abort the pass of target vehicle 2310. For example, system 100 may cause vehicle 200 to stop accelerating or brake. Additionally or alternatively, system 100 may issue an audible announcement, such as to notify driver of vehicle 200 that the lane change is being aborted.

[0309] FIG. 24A is an exemplary block diagram of memory 140, which may store instructions for performing one or more operations consistent with disclosed embodiments. As illustrated in FIG. 24A, memory 140 may store one or more modules for identification of the target vehicle and responses described herein. For example, memory 140 may store a lane constraint module 2400, a target vehicle acquisition module 2410, and an action module 2415.

[0310] In one embodiment, lane constraint module 2400 may store instructions which, when executed by processing unit 110, may detect and define first lane constraint 2302 and second lane constraint 2304. For example, processing unit 110 may execute lane offset module 2400 to process the plurality of images received from at least one image capture device 122–124 and detect first lane constraint 2302 and second lane constraint 2304. As discussed above, this may include identifying painted lane lines or markers and/or measuring a midpoint of a road surface. Processing unit 110 may perform the analysis based on the techniques described in connection with FIGS. 5A-5D, above.

[0311] In some embodiments, target acquisition module 2410 may store instructions which, when executed by processing unit 110, may detect the presence of target vehicle 2310 and monitor the position of target vehicle 2310. For example, target acquisition module 2410 may process the plurality of images to detect and monitor target vehicle 2310. Additionally or alternatively, when executing target acquisition module 2410, processing unit 110 may receive information from another module or other system indicative of the presence and/or location of target vehicle 2310. Processing unit 110 may perform the analysis based on the techniques described in connection with FIGS. 5A-5D, above.

[0312] Processing unit 110 may be configured to determine the presence of one or more objects such as target vehicle 2310 in the vicinity of vehicle 200. For example target vehicle 2310 may comprise another vehicle, such as a car, truck or motorcycle traveling near vehicle 200. Processing unit 110 may determine, for each target vehicle 2310, an offset profile. The offset profile may include a determination of whether in its current and predicted position, target vehicle 2310 will be within a predefined range of vehicle 200. If processing unit 110 determines that target vehicle 2310 is or will be within a predefined range of vehicle 200, processing unit may determine whether there is enough space within first lane constraint 810 and second lane constraint 820, for vehicle 200 to bypass target vehicle 2310. If there is not enough space, processing unit 110 may execute a lane change. If there is enough space, processing unit 110 may determine whether there is enough time to bypass target vehicle 2310 before the distance between vehicle 200 and target vehicle 2310 closes. If there is enough time, processing unit 110 may initiate and or activate the offset maneuver to bypass target vehicle 2310. The offset maneuver may be executed by processing unit 110 so that the movement of vehicle 200 is smooth and comfortable for the driver. For example, the offset slew rate may be approximately 0.15 to 0.75 m/sec. The offset maneuver

IPR2025-01034
Tesla EX1002 Page 1729

may be executed so that the maximum amplitude of the offset maneuver will occur when the gap between vehicle 200 and object 825 closes. If there is not enough time, processing unit 110 may initiate braking and then initiate an offset maneuver.

[0313] Further, processing unit 110 may execute action module 2415 to abort the plan of vehicle 200 to pass target vehicle 2310. If target vehicle 2310 is not in lane 2330 of vehicle 200, instructions included in action module 1230 may enable vehicle 200 to pass target vehicle 2330. However, if execution of target vehicle acquisition module 2410 indicates that target vehicle 2310 is changing lanes into lane 2330 of vehicle 200, processing unit 110 may execute instructions included in action module 2415 to abort the lane change of vehicle 200. For example, processing unit 110 may transmit electronic signals to throttling system 220, braking system 230, and/or steering system 240 of vehicle 200 to abort the lane change. Additionally or alternatively, processing unit may cause an audible notification to sound.

[0314] FIG. 24B illustrates a flowchart of an exemplary process 2420 for navigating a vehicle among encroaching vehicles, consistent with disclosed embodiments. Process 2420 may identify lane constraints that define a lane of travel for a vehicle (e.g., vehicle 200) to travel, identify and monitor a target vehicle (e.g., vehicle 2310), and enable the vehicle to pass the target vehicle or abort the pass if it is determined that the target vehicle is entering a lane in which the vehicle is traveling.

[0315] At step 2430, at least one of image capture device 122, 124, and/or 126 may acquire a plurality of images of an area in the vicinity of vehicle 200. For example, a camera included in image acquisition unit 120 (such as image capture device 122) may capture a plurality of images and transmit them over a digital connection (e.g., USB, wireless, Bluetooth, etc.) to processing unit 110. In some embodiments, processing unit 110 may receive more than one plurality of images via a plurality of data interfaces. For example, processing unit 110 may receive a plurality of images from each of image capture devices 122, 124, 126, each of which may have an associated data interface for communicating data to processing unit 110. The disclosed embodiments are not limited to any particular data interface configurations or protocols.

[0316] Next, at step 2440, processing unit 110 may determine a first lane constraint on first vehicle side 802 and a second lane constraint on second vehicle side 812 using the plurality of images received via data interface 128. For example, as part of implementing step 2440, processing unit 110 may execute instructions of lane constraint module 910. Further, as part of determining the first and second lane constraints, processing unit 110 may use one or more of the processes discussed above in connection with FIGS. 5A-5D.

[0317] At step 2450, processing unit 110 may acquire target vehicle 2310. To acquire target vehicle 2310, processing unit 110 may execute target vehicle acquisition module 2410. For example, processing unit 110 may execute instructions to analyze acquired images to identify second lane 2340 in which target vehicle 2310 is traveling and determine whether target vehicle 2310 is traveling in lane 2330 in which vehicle 200 is traveling. This determination may be based on the techniques described in connection with FIGS. 5A-5D, above.

IPR2025-01034
Tesla EX1002 Page 1730

[0318] At step 2455, processing unit 110 may determine whether second lane 2340 in which target vehicle 2310 is traveling is different than lane 2330 in which vehicle 200 is traveling.

[0319] At step 2460, processing unit 110 may enable vehicle 200 to pass target vehicle 2310 if second lane 2340 is different than lane 2330 in which vehicle 200 is traveling. To enable vehicle 200 to pass target vehicle 2310, processing unit may execute action module 2415.

[0320] Next, at step 2465, processing unit 110 may execute target acquisition module 2410 to monitor target vehicle 2310. This may include estimating a velocity of target vehicle 2310 and determining the location of target vehicle 2310, such as with respect to vehicle 200.

[0321] Step 2470 may include determining whether target vehicle 2310 has entered lane 2330. If processing unit 110 determines that target vehicle 2310 has not entered lane 2330, at step 2480, processing unit 110 may allow vehicle 200 to complete the pass.

[0322] At step 2490, if processing unit 110 determines that target vehicle 2310 has entered lane 2330 (or is entering lane 2330 or is otherwise on a trajectory to bring vehicle 2310 into lane 2330), processing unit 110 may execute action module 2415 to abort the pass. This may include, for example, issuing an audible notification to driver of vehicle 200 via speakers 360. Additionally or alternatively, step 2490 may include executing instructions included in action module 2415 to cause processing unit 110 to transmit electronic signals to throttling system 220, braking system 230, and/or steering system 240 of vehicle 200 to abort lane change.

[0323] Navigating a Vehicle to Avoid Encroaching Traffic

[0324] System 100 may provide driver assist functionality that monitors the vicinity around vehicle 200 and responds to the presence of another vehicle encroaching upon vehicle 200. Monitoring the vicinity around vehicle 200 may include monitoring a collision threshold. For example a collision threshold may include a time to collision or a minimum predetermined distance between vehicle 200 and other traffic. System 100 may further cause vehicle 200 to take evasive action to avoid encroaching traffic. For example, evasive action may include braking, changing lanes, or otherwise altering the course of vehicle 200.

[0325] As illustrated in FIG. 25, vehicle 200 may travel on roadway 2500. Vehicle 200 may include system 100 to detect and respond to encroaching traffic. For example, vehicle 200 may determine that another vehicle is entering into the lane in which vehicle 200 is traveling or otherwise determine that another vehicle is crossing a collision threshold. Vehicle 200 may react to an encroaching vehicle, such as by altering course, braking, or accelerating.

[0326] As discussed with respect to FIG. 8 and as shown in FIG. 25, vehicle 200 may include first vehicle side 802, which may be first distance 805 from a first lane constraint 2502. Similarly, vehicle 200 may include second vehicle side 812 opposite from first vehicle side 802, and second vehicle side 812 may be second distance 815 from a second lane constraint 2504. In this manner, first lane constraint 2502 and second lane constraint 2504 may define a lane 2505 within which vehicle 200 may travel.

[0327] System 100 may determine first lane constraint 2502 and second lane constraint 2504 based on a plurality of images acquired by one or more of image capture devices 122–126. According to

IPR2025-01034
Tesla EX1002 Page 1731

some embodiments, first lane constraint 2502 and/or second lane constraint 2504 may be identified by visible lane boundaries, such a line marked on a road surface. Additionally or alternatively, first lane constraint 2502 and/or second lane constraint 2504 may include an edge of a road surface. According to some embodiments, system 100 may determine first lane constraint 2502 and/or second lane constraint 2502 by identifying a midpoint 2520 of a road surface width (or any other suitable road feature vehicle 200 may use as a navigation reference). System 100 may identify lane constraints in this manner when, for example, lines designating road lanes are not painted or otherwise labeled.

[0328] Detection of first lane constraint 2502 and/or second lane constraint 2504 may include processing unit 110 determining their 3D models in a camera coordinate system. For example, the 3D models of first lane constraint 2502 and/or second lane constraint 2504 may be described by a third-degree polynomial. In addition to 3D modeling of first lane constraint 2502 and/or second lane constraint 2504, processing unit 110 may estimate motion parameters, such as the speed, yaw and pitch rates, and acceleration of vehicle 200. Optionally, processing unit may detect static and moving vehicles and their position, heading, speed, and acceleration, all relative to vehicle 200. Processing unit 110 may determine a road elevation model to transform the information acquired from the plurality of images into 3D space.

[0329] The driver of vehicle 200 cannot assume that other traffic traveling in adjacent or near-adjacent lanes will only change lanes if it is safe for that traffic to shift into lane 2505 in which vehicle 200 is driving. Thus, it may be desirable to consider and monitor traffic traveling in nearby lanes to detect lateral encroachment into lane 2505 of vehicle 200, so that vehicle 200 may react to lateral encroachment to avoid a collision. System 100 may identify an encroaching vehicle 2510 based on the plurality of images and determine that encroaching vehicle 2510 is approaching vehicle 200. System 100 may then cause an action to account for the encroaching vehicle. For example, system 100 may cause vehicle 200 to maintain a current velocity and travel within first lane constraint 2502 and second lane constraint 2504 such that a first distance 2530, which is on first vehicle side 802 on which encroaching vehicle 2510 is approaching, is greater than a second distance 2540.

[0330] Processing unit 110 may be configured to determine the presence of one or more encroaching vehicles 2510 in the vicinity of vehicle 200. Processing unit 110 may determine, for each encroaching vehicle 2510 an offset profile. The offset profile may include a determination of whether in its current and predicted position, encroaching vehicle 2510 will be within a predefined range of vehicle 200. If processing unit 110 determines that encroaching vehicle 2510 is or will be within a predefined range of vehicle 200, processing unit may determine whether there is enough space within first lane constraint 2502 and second lane constraint 2504, for vehicle 200 to bypass encroaching vehicle 2510. If there is not enough space, processing unit 110 may execute a lane change. If there is enough space, processing unit 110 may determine whether there is enough time to bypass encroaching vehicle 2510 before the distance between vehicle 200 and encroaching vehicle 2510 closes.

[0331] For example, if there is enough time, processing unit 110 may initiate and or activate the offset maneuver to bypass encroaching vehicle 2510. The offset maneuver may be executed by processing unit 110 so that the movement of vehicle 200 is smooth and comfortable for the driver. For example, the

IPR2025-01034
Tesla EX1002 Page 1732

offset slew rate may be approximately 0.15 to 0.75 m/sec. The offset maneuver may be executed so that the maximum amplitude of the offset maneuver will occur when the gap between vehicle 200 and encroaching vehicle 2510 closes. If there is not enough time, processing unit 110 may initiate braking (e.g., via transmitting electronic signals to braking system 230) and then initiate offset maneuver (e.g., by transmitting electronic signals to throttling system 220 and/or steering system 240).

[0332] System 100 may determine, based on a plurality of images acquired by one or more of image capture devices 122-126, that encroaching vehicle 2510 has crossed at least one collision threshold. For example, the at least one collision threshold may include a minimum predetermined distance 2550 between vehicle 200 and encroaching vehicle 2510. For example, encroaching vehicle 2510, as illustrated in FIG. 25, is shown exceeding minimum predetermined distance 2550. Additionally or alternatively, the at least one collision threshold may include a time to collision of vehicle 200 and encroaching vehicle 2510. The time-to-collision threshold may be determined based on the distance between vehicle 200 and encroaching vehicle 2510, the velocity of vehicle 200 and/or encroaching vehicle 2510, the lateral velocity of vehicle 200 and/or encroaching vehicle 2510, and/or the acceleration of vehicle 200 and/or encroaching vehicle 2510. A collision threshold based on a time to collision may be set to allow enough time for system 100 to effectively conduct evasive action to avoid collision.

[0333] If system 100 determines that at least one collision threshold has been crossed, system 100 may cause vehicle 200 to take evasive action. For example, this may include causing other subsystems of vehicle 200 to operate. Thus, system 100 may operate to cause vehicle 200 to increase speed by communicating with throttling system 220, braking system 230, and/or steering system 240 to change the speed and/or direction of vehicle 200.

[0334] The evasive action may include causing vehicle 200 to change lanes. This may be a desirable response if, for example, vehicle 200 is traveling on a multilane highway and system 100 determines that changing lanes to move away from encroaching vehicle 2510 will avoid a collision. Evasive action may include vehicle 200 altering its course. Additionally or alternatively, evasive action may include altering course of vehicle 200. For example, to take evasive action, processing unit 110 may transmit electronic signals to throttling system 220, braking system 230, and/or steering system 240.

[0335] System 100 may also be configured to cause vehicle 200 to take an action after the evasive action has been completed. For example, system 100 may cause vehicle 200 to return to midpoint 2520 of lane 2505 in which vehicle 200 is traveling. Additionally or alternatively, system 100 may cause vehicle 200 to resume a preset speed after braking in response to encroaching vehicle 2510.

[0336] FIG. 26 is an exemplary block diagram of memory 140, which may store instructions for detecting and responding to traffic laterally encroaching on a vehicle consistent with disclosed embodiments. As illustrated in FIG. 26, memory 140 may store a lane constraint module 2610, an encroaching vehicle acquisition module 2620, and an action module 2630.

[0337] In one embodiment, lane constraint module 2610 may store instructions which, when executed by processing unit 110, may detect and define first lane constraint 2502 and second lane constraint 2504. For example, processing unit 110 may execute lane offset constraint module 2610 to

IPR2025-01034
Tesla EX1002 Page 1733

process the plurality of images received from at least one image capture device 122–126 and detect first lane constraint 2502 and second lane constraint 2504. As discussed above, this may include identifying painted lane lines and/or measuring a midpoint of a road surface. Processing unit 110 may perform the analysis based on the techniques described in connection with FIGS. 5A-5D, above.

[0338] In one embodiment, encroaching vehicle acquisition module 2620 may store instructions which, when executed by processing unit 110, may detect the presence of encroaching vehicle 2510 and monitor encroaching vehicle 2510. For example, encroaching vehicle acquisition module 2620 may include instructions for determining a relative location of encroaching vehicle 2510 to vehicle 200. In some embodiments, this may include monitoring the velocity of encroaching vehicle 200. According to some embodiments, encroaching vehicle acquisition module 2620 may determine whether encroaching vehicle 2510 has exceeded a collision threshold. A collision threshold may be, for example, a minimum predetermined distance between vehicle 200 and encroaching vehicle 2510. If encroaching vehicle 2510 comes closer to vehicle 200 than the minimum predetermined distance, processing unit 110 may determine that encroaching vehicle 2510 is indeed encroaching and execute instructions to avoid collision with encroaching vehicle 2510.

[0339] Additionally or alternatively, a collision threshold may include a time to collision. The time-to-collision threshold may be determined based on the distance between vehicle 200 and encroaching vehicle 2510, the velocity of vehicle 200 and/or encroaching vehicle 2510, the lateral velocity of vehicle 200 and/or encroaching vehicle 2510, and/or the acceleration of vehicle 200 and/or encroaching vehicle 2510. A collision threshold based on a time to collision may be set to allow enough time for processing unit 110 and system 100 to effectively conduct evasive action to avoid collision.

[0340] Further, processing unit 110 may execute action module 2630 to respond to the detection of encroaching vehicle 2510 and/or the crossing of a collision threshold. For example, action module 2630 may include instructions to cause vehicle 200 to maintain a current velocity and to travel within first lane constraint 2502 and second lane constraint 2504 such that first distance 2530 is greater than second distance 2540. The first distance 2530 may be on the same side of vehicle 200 as encroaching vehicle 2510, so that vehicle 200 is farther away from encroaching vehicle 2510 while still within first lane constraint 2502 and second lane constraint 2504. If processing unit 110 determines that a collision threshold has been crossed, processing unit 110 may execute action module 2630 to cause vehicle 200 to take evasive action, such as altering course, braking, and/or changing lanes. Action module 2630 may also include instructions that cause vehicle 200 to resume course after completing evasive action. For example, processing unit 110 may cause vehicle 200 to resume a preset speed after braking or return to the center of lane 2505.

[0341] FIG. 27 illustrates a flowchart of an exemplary process 2720 detecting and responding to traffic laterally encroaching on a vehicle, consistent with disclosed embodiments. Process 2720 may identify lane constraints that define a lane of travel for vehicle travel, determine whether an encroaching vehicle 2510 is approaching, and cause vehicle 200 to maintain current velocity and to travel within first

IPR2025-01034
Tesla EX1002 Page 1734

lane constraint 2501 and second lane constraint 2504 such that first distance 2530, on the side of vehicle 200 that encroaching vehicle 2510 is approaching, is greater than second distance 2540.

[0342] At step 2730, at least one image capture device 122, 124, and/or 126 may acquire a plurality of images of an area in the vicinity of vehicle 200. For example, a camera included in image acquisition unit 120 (such as image capture device 122) may capture a plurality of images and transmit them over a digital connection (e.g., USB, wireless, Bluetooth, etc.) to processing unit 110. In some embodiments, processing unit 110 may receive more than one plurality of images via a plurality of data interfaces. For example, processing unit 110 may receive a plurality of images from each of image capture devices 122, 124, 126, each of which may have an associated data interface for communicating data to processing unit 110. The disclosed embodiments are not limited to any particular data interface configurations or protocols.

[0343] Next, at step 2740, processing unit 110 may determine a first lane constraint on first vehicle side 802 and a second lane constraint on second vehicle side 812 using the plurality of images received via data interface 128. For example, as part of implementing step 2740, processing unit 110 may execute instructions of lane constraint module 2610. Further, as part of determining the first and second lane constraints, processing unit 110 may use one or more of the processes discussed above in connection with FIGS. 5A-5D.

[0344] At step 2750, processing unit 110 may determine whether encroaching vehicle 2510 is approaching. To make this determination, processing unit 110 may execute encroaching vehicle acquisition module 2620. Encroaching vehicle acquisition module 2620 may include instructions to process images to detect other traffic. This may include identifying vehicles within a certain range of vehicle 200, such as those vehicles that are adjacent to vehicle 200. These adjacent vehicles may be encroaching vehicles 2510.

[0345] Once encroaching vehicle 2510 is identified, processing unit may determine more information regarding vehicle 2510. For example, at step 2555, processing unit 110 may determine whether target vehicle 2330 has exceeded a collision threshold. A collision threshold may be, for example, a minimum predetermined distance between vehicle 200 and encroaching vehicle 2510. If encroaching vehicle 2510 comes closer to vehicle 200 than the minimum predetermined distance, processing unit 110 may determine that encroaching vehicle 2510 is indeed encroaching and execute instructions to avoid collision with encroaching vehicle 2510.

[0346] Additionally or alternatively, a collision threshold may be a time to collision. The time-to-collision threshold may be determined based on the distance between vehicle 200 and encroaching vehicle 2510, the velocity of vehicle 200 and/or encroaching vehicle 2510, the lateral velocity of vehicle 200 and/or encroaching vehicle 2510, and/or the acceleration of vehicle 200 and/or encroaching vehicle 2510. A collision threshold based on a time to collision may be set to allow enough time for processing unit 110 and system 100 to effectively conduct evasive action to avoid collision.

[0347] At step 2760, processing unit 110 may cause vehicle 200 to maintain current velocity and to travel within first lane constraint 2502 and second lane constraint 2504. To cause vehicle 200 to

IPR2025-01034
Tesla EX1002 Page 1735

operate in this manner, processing unit 110 may execute action module 2630. Additionally or alternatively, step 2760 may include executing instructions on action module 1230 to cause processing unit 110 to transmit electronic signals to the accelerator 2610, brakes 2620, and/or steering system of vehicle 200 to cause vehicle 200 to maintain current velocity and to travel within first and second lane constraints 810 and 820.

[0348] If, at step 2755, processing unit 110 determined that a collision threshold has been exceeded, the processing unit 110 may take evasive action. The evasive action may include causing vehicle 200 to change lanes. This may be a desirable response if, for example, vehicle 200 is traveling on a multilane highway and system 100 determines that changing lanes to move away from encroaching vehicle 2510 will avoid a collision. Evasive action may include vehicle 200 altering its course. Additionally or alternatively, evasive action may include altering course of vehicle 200. For example, processing unit 110 may undertake evasive action by transmitting electronic signals to throttling system 220, braking system 230, and/or steering system 240 of vehicle 200. After the evasive action is completed, at step 2780, processing unit 110 may control vehicle 200 to resume its prior navigation (e.g., to resume navigation to a desired location).

[0349] Multi-Threshold Reaction Zone for Vehicle Navigation

[0350] System 100 may provide driver assist functionality that causes a response in vehicle 200, such as braking, accelerating, switching lanes, turning, and/or other navigational responses. For example, if system 100 detects the presence of another vehicle ahead of vehicle 200 that is traveling at a rate of speed slower than vehicle 200, system 100 may cause vehicle 200 to reduce its speed by braking. System 100 may apply a braking profile that accounts for the immediacy of the risk (e.g., the risk of collision) to provide the driver with a natural driving sensation.

[0351] System 100 may cause various different responses depending on the situation and a determined risk of collision with another vehicle, for example. System 100 may take no action in response to changes in speed or direction of a target vehicle ahead if the target vehicle is sufficiently far ahead and the determined risk of collision is low. Where the target vehicle may be closer or when the risk of collision rises above a predetermined level, system 100 may cause a response, such as braking, etc. When the risk of collision is even higher (e.g., where system 100 determines that a collision would be imminent without evasive action), system 100 may cause vehicle 100 to take an evasive action, such as maximum or near maximum braking, change of direction, etc.

[0352] FIGS. 28A and 28B are diagrammatic representations of a primary vehicle 200a on a road 2800, consistent with disclosed embodiments. In some instances, road 2800 may be divided into two lanes, lane 2810 and lane 2820. A target object, such as target vehicle 200b, may be traveling ahead of primary vehicle 200a in the same lane (e.g., lane 2820 as shown in FIGS. 28A and 28B) or in a different lane. As shown in the example depicted in FIG. 28A, primary vehicle 200a and target vehicle 200b may be separated by a distance d_1. At a given time after the scene depicted in FIG. 28A, primary vehicle 200a and target vehicle 200b may be separated by a distance d_2 as shown in FIG. 28B, where d_2 is less than d_1.

IPR2025-01034
Tesla EX1002 Page 1736

For example, primary vehicle 200a may be traveling at a rate of speed greater than target vehicle 200b, causing the distance between the vehicles to decrease from d_1 to d_2.

[0353] As another example, primary vehicle 200a and target vehicle 200b may be traveling at the same rate of speed until target vehicle 200b reduces its speed by braking, or primary vehicle 200a increases its speed by accelerating, causing the distance between the vehicles to decrease from d_1 to d_2. As another example, target vehicle 200b may encroach from a side of primary vehicle 200a. In some circumstances, if target vehicle 200b is ahead or a sufficient distance away from primary vehicle 200a (e.g., five meters or more, 10 meters or more, etc.) and moves toward primary vehicle 200a, system 100 may not take any action. However, if target vehicle 200b continues to move closer to primary vehicle 200a, then system 100 may cause primary vehicle 200a to brake, change speed, and/or change lanes. For example, if target vehicle 200b is within a predetermined threshold (e.g., within five meters), primary vehicle 200a may then take action. Different scenarios involving the relative speeds and positions of primary vehicle 200a and target vehicle 200b are possible, and the disclosed embodiments are not limited to any particular scenario.

[0354] In some embodiments, the multi-threshold reaction zone may provide a natural feeling driving experience to the user. For example, as discussed above, if the risk of collision is low, then system 100 may disregard movements by target vehicle 200b. As a result, primary vehicle 200a may not respond to movements or actions of target vehicle 200b when there is not a risk of a collision (e.g., primary vehicle 200a would not need to mimic every motion of target vehicle 200b when it's 100 meters ahead). However, if target vehicle 200b is close to primary vehicle 200a and/or if system 100 determines that the risk of collision is high, then a responsive maneuver may be taken such that the user feels safer by increasing space between primary vehicle 200a and target vehicle 200b. If system 100 determines that a crash may be imminent, then system 100 may take a more dramatic action without causing the user to be surprised, because the action may be necessary to avoid a collision.

[0355] Accordingly, in some embodiments, system 100 may associate the different reaction zones with different degrees of responsive actions. For example, in some embodiments, system 100 may take no action when target vehicle 200b is within a first threshold (e.g., when target vehicle 200b is far away from primary vehicle 200a), system 100 may take a medium action with target vehicle 200b is within a second threshold (e.g., when target vehicle 200b is becoming closer to primary vehicle 200a), and system 100 may take a more dramatic action when target vehicle 200 is within a third threshold (e.g., when target vehicle 200b is sufficiently close to primary vehicle 200a that there is a risk of a collision). In a first reaction zone associated with the first threshold, system 100 may take no action when the estimated distance-to-target associated with target vehicle 200b is greater than twice a predetermined safety distance. In some embodiments, the first reaction zone may apply where the estimated distance-to-target associated with target vehicle 200b falls in the range of 1.5 to 2.5 times the predetermined safety distance.

[0356] The estimated distance-to-target may be the current distance between primary vehicle 200a and target vehicle 200b plus the expected change of this distance over a prediction time (e.g., in the range of 0.1 to 1.0 seconds, depending on factors associated with system 100 such as velocity tracking

IPR2025-01034
Tesla EX1002 Page 1737

control loops, actuators, and vehicle dynamics). The expected change of distance may be calculated as: $(v_{target} - v_{primary}) * t_{prediction} + ((a_{target} - a_{primary}) * t_{prediction}^{1/2})$, where v_{target} and $v_{primary}$ correspond to the speed of target vehicle 200b and primary vehicle 200a, respectively, a_{target} and $a_{primary}$ correspond to the acceleration of target vehicle 200b and primary vehicle 200a, respectively, and $t_{prediction}$ corresponds to the prediction time. Choosing a prediction time approximating the overall reaction time of system 100 may account for the fact that desired navigational responses for primary vehicle 200a may not be implemented immediately, and thereby may provide the driver and/or passengers of primary vehicle 200a with a smooth, natural driving experience.

[0357] The predetermined safety distance may be defined as: max $\{d_{static}, d_{dynamic}\}$. d_{static}, which may fall in the range of 2 to 10 meters, may represent a desired safety distance between primary vehicle 200a and another vehicle (such as target vehicle 200b) while the vehicles are stopping and/or moving at a low rate of speed. $d_{dynamic}$ may represent a desired safety distance when the vehicles are moving at a speed greater than a low rate of speed, and may be calculated as: t_{safety} * min $(v_{target}, v_{primary})$, where v_{target} and $v_{primary}$ correspond to the speed of target vehicle 200b and primary vehicle 200a, respectively. t_{safety} may fall in the range of 0.5 to 2.5 seconds and may be adjusted by the driver of primary vehicle 200a via user interface 170 according to the driver's preferences. Thus, the driver may be able to control the distance that system 100 maintains between primary vehicle 200a and other vehicles.

[0358] In a second reaction zone associated with the second threshold, system 100 may place target vehicle 200b in a safety zone and apply different weights to different maneuvers performed by target vehicle 200b. For example, as target vehicle 200b may approach a lower boundary of the safety zone, e.g., the estimated distance-to-target associated with target vehicle 200b may approach the predetermined safety distance (discussed above in connection with the first reaction zone), system 100 may assign more weight to deceleration maneuvers (e.g., mimicked more) and less weight to acceleration maneuvers (e.g., mimicked less). In some embodiments, the lower boundary may fall in the range of 0.5 to 1.5 times the predetermined safety distance, depending on driver preferences. Conversely, as target vehicle 200b approaches an upper boundary of the safety zone, e.g., the estimated distance-to-target associated with target vehicle 200b may approach twice the predetermined safety distance, system 100 may assign less weight to deceleration maneuvers (e.g., mimicked less) and more weight to acceleration maneuvers (e.g., mimicked more). In some embodiments, the lower boundary may fall in the range of 1.5 to 2.5 times the predetermined safety distance, depending on driver preferences.

[0359] In a third reaction zone associated with the third threshold, system 100 may place target vehicle 200b in a danger zone when the estimated distance-to-target associated with target vehicle 200b is less than the predetermined safety distance. In this scenario, system 100 may cause primary vehicle 200a to mimic (e.g., immediately) any deceleration maneuvers (while disregarding any acceleration maneuvers) performed by target vehicle 200b. In some embodiments, the first reaction zone may apply where the estimated distance-to-target associated with target vehicle 200b falls in the range of 0.5 to 1.5 times the predetermined safety distance, depending on driver preferences.

IPR2025-01034
Tesla EX1002 Page 1738

[0360] In some embodiments, system 100 may cause a response in primary vehicle 200a, such as braking. As indicated in FIG. 28B, for example, the distance between the primary vehicle 200a and target vehicle 200b may decrease from d_1 to d_2. Depending on the distance d_2 and, by extension, the time before collision, system 100 may cause primary vehicle 200a to reduce its speed so as to avoid a collision with target vehicle 200b. In addition, system 100 may apply one or more braking profiles when causing primary vehicle 200a to reduce its speed, also based on, for example, the time before collision. Thus, if the time before collision (and/or the distance d_2) exceeds a first predetermined threshold, system 100 may cause primary vehicle 200a to brake in a gradual manner, change lanes, and/or change speed, whereas if the time before collision (and/or the distance d_2) is below a second predetermined threshold, system 100 may cause primary vehicle 200a to brake, change lanes, and/or change speed in a more rapid manner.

[0361] FIG. 29 is an exemplary block diagram of a memory configured to store instructions for performing one or more operations, consistent with the disclosed embodiments. As shown in FIG. 29, memory 140 may store a target monitoring module 2902, an intercept time module 2904, and an action response module 2906. The disclosed embodiments are not limited to any particular configuration of memory 140. Further, processing unit 110 may execute the instructions stored in any of modules 2902-2906 included in memory 140.

[0362] In one embodiment, target monitoring module 2902 may store software instructions (such as computer vision software) which, when executed by processing unit 110, identifies and monitors a target object (such as target vehicle 200b) appearing in a plurality of images representing an environment in the vicinity of primary vehicle 200. For purposes of this disclosure, the target object may also be referred to as target vehicle 200b, although the target object may be a pedestrian, road hazard (e.g., large debris), and the like. The plurality of images may be acquired by one or more of image capture devices 122, 124, and 126. Processing unit 110 may execute target monitoring module 2902 to identify and monitor target vehicle 200b by, for example, analyzing the plurality of images using the techniques described in connection with FIGS. 5A-5D, above. Thus, target monitoring module 2902 may track different variables, such as the motion (e.g., direction of travel and trajectory), speed, and acceleration associated with target vehicle 200b, as well as the distance between primary vehicle 200a and the target vehicle 200b. Such information may be tracked continuously or at predetermined intervals.

[0363] In one embodiment, intercept time module 2904 may store software instructions which, when executed by processing unit 110, determines an indicator of an intercept time between primary vehicle 200a and target vehicle 200b. The intercept time may refer to an amount of time before primary vehicle 200a makes contact (e.g., collides) with target vehicle 200b. Processing unit 110 may execute intercept time module 2904 to determine an indicator of the intercept time based on an analysis of images acquired by one or more of image capture devices 122, 124, and 126. For example, intercept time module 2904 may make the determination using a series of time-based observations, e.g., of the position, speed, and/or acceleration of target vehicle 200b (relative to primary vehicle 200a), such as Kalman filters or linear quadratic estimation (LQE). The Kalman filters may be based on a measurement of the scale of target vehicle 200b, where the scale measurement is proportional to the intercept time.

IPR2025-01034
Tesla EX1002 Page 1739

[0364] In one embodiment, action response module 2906 may store software instructions (such as computer vision software) which, when executed by processing unit 110, causes one or more responses in primary vehicle 200a. The responses may be based on the identification and monitoring of target vehicle 200b (e.g., performed via execution of target monitoring module 2902) and/or the indicator of an intercept time between primary vehicle 200a and target vehicle 200b (e.g., determined via execution of intercept time module 2904). Processing unit 110 may cause one or more responses in primary vehicle 200a by, for example, transmitting electronic signals (e.g., via a CAN bus) to throttling system 220, braking system 230, and/or steering system 240 of primary vehicle 200a to brake, accelerate, or trigger a turn, lane shift, and/or change in direction of primary vehicle 200a. Processing unit 110 may use extended Kalman Filters to estimate data associated with target vehicle 200b and primary vehicle 200a, such as: speed, acceleration, turn rate, pitch angle, pitch rate, position and heading of target vehicle 200b relative to primary vehicle 200a, the size of target vehicle 200b, road geometry, and the like. For example, processing unit 110 may receive measurements from components on primary vehicle 200a, such as an odometer, an inertial measurement unit (IMU), image processor 190, and the like. Thus, processing unit 110 may calculate data associated with target vehicle 200b and/or primary vehicle 200a using state equations derived from kinematic equations of motion, rigidity constraints, and motion assumptions, where inputs to the equations may include measurements from components on primary vehicle 200a. Processing unit 110 may also use the techniques described in connection with FIGS. 4-7, above, to cause one or more responses in primary vehicle 200a.

[0365] FIG. 30 is a flow chart showing an exemplary process 3000 for causing a response in a primary vehicle, consistent with disclosed embodiments. At step 3010, processing unit 110 may receive a plurality of images via data interface 128 between processing unit 110 and image acquisition unit 120. For instance, one or more cameras included in image acquisition unit 120 may capture a plurality of images of an area forward of primary vehicle 200a (or to the sides or rear of a vehicle, for example) and transmit them over a data connection (e.g., digital, wired, USB, wireless, Bluetooth, etc.) to processing unit 110.

[0366] At step 3020, processing unit 110 may execute target monitoring module 2902 to identify a target object (such as target vehicle 200b) within the plurality of images. For example, target monitoring module 2902 may detect the presence of vehicles in the images using the techniques described in connection with FIGS. 5A and 5B, above. Multiple vehicles (and/or objects) may be detected in the same lane or in a different lane as primary vehicle 200a, and at varying distances from primary vehicle 200a, based on image data, position data (e.g., GPS location information), map data, the yaw rate of primary vehicle 200a, lane or other road markings, speed data, and/or data from sensors included in primary vehicle 200a. In a scenario where multiple vehicles are detected, target monitoring module 2902 may determine target vehicle 200b to be the vehicle traveling in the same lane as primary vehicle 200a and/or located closest to primary vehicle 200a.

[0367] At step 3030, processing unit 110 may execute target monitoring module 2902 to monitor target vehicle 200b identified at step 3020. For example, target monitoring module 2902 may track

IPR2025-01034
Tesla EX1002 Page 1740

information associated with target vehicle 200b, such as the motion (e.g., direction of travel and trajectory), speed, and acceleration, as well as the distance between primary vehicle 200a and the target vehicle 200b. Target monitoring module 2902 may track such information continuously, or at predetermined intervals, by analyzing the plurality of images using the techniques described in connection with FIGS. 5A-5D, above. At step 3040, processing unit 110 may execute intercept time module 2904 to determine an indicator of an intercept time between primary vehicle 200a and target vehicle 200b. Intercept time module 2904 may make the determination by tracking the position, speed, and/or acceleration of target vehicle 200b (relative to primary vehicle 200a) over one or more periods of time. Intercept time module 2904 may use the techniques described in connection with FIGS. 5A and 5B, above to track such information.

[0368] At step 3050, processing unit 110 may execute action response module 2906 to cause one or more responses in primary vehicle 200a. For example, processing unit 110 may transmit electronic signals (e.g., via a CAN bus) to throttling system 220, braking system 230, and/or steering system 240 of primary vehicle 200a to brake, accelerate, or trigger a turn, lane shift, and/or change in direction of primary vehicle 200a. Further, one or more actuators may control throttling system 220, braking system 230, and/or steering system 240. For example, processing unit 110 may transmit electronic signals that cause system 100 to physically depress the brake by a predetermined amount or ease partially off the accelerator of vehicle 200. Further, processing unit 110 may transmit electronic signals that cause system 100 to steer vehicle 200 in a particular direction. Such responses may be based on the monitoring of target vehicle 200b (performed at step 3030) and/or the indicator of an intercept time between primary vehicle 200a and target vehicle 200b (determined at step 3040). In some embodiments, the intercept time may be compared with one or more predetermined thresholds, e.g., a first and second intercept threshold. For example, the response may include an emergency avoidance action if the indicator of intercept time indicates that a target object is within a particular intercept threshold (e.g., within the second intercept threshold). The emergency avoidance action may include changing lanes and/or emergency braking.

[0369] The thresholds may be expressed as units of time. Thus, for example, if the indicator of intercept time indicates that target vehicle 200b is outside of the first threshold (e.g., the time before collision between primary vehicle 200a and target vehicle 200b exceeds the first threshold), then action response module 2906 may cause a response in primary vehicle 200a based on an averaged motion profile associated with target vehicle 200b. The averaged motion profile associated with target vehicle 200b may represent an averaged position and/or averaged speed of target vehicle 200b for a particular threshold. In some embodiments, if target vehicle 200b is a certain distance and/or traveling a certain speed, system 100 may elect to take no action. For example, if target vehicle 200b is ahead or a sufficient distance away from primary vehicle 200a (e.g., five meters, 10 meters, etc.), system 100 may not take any action unless target vehicle 200b becomes closer to primary vehicle 200.

[0370] If the indicator of intercept time indicates that target vehicle 200b is between the first and second thresholds (e.g., the time before collision between primary vehicle 200a and target vehicle 200b falls in between the first and second thresholds), then action response module 2906 may cause a response

IPR2025-01034
Tesla EX1002 Page 1741

in primary vehicle 200a based on the actual motion associated with target vehicle 200b. The actual motion may represent a position and/or speed of target vehicle 200b (e.g., not averaged or delayed) If the indicator of intercept time indicates that target vehicle 200b is within the second threshold (e.g., the time before collision between primary vehicle 200a and target vehicle 200b is below the second threshold), then action response module 2906 may cause an emergency action in primary vehicle 200a (such as a lane change or emergency braking).

[0371] FIG. 31 is a flow chart showing an exemplary process 3100 for declining to cause a response in a primary vehicle, consistent with disclosed embodiments. At step 3110, processing unit 110 may receive a plurality of images via data interface 128 between processing unit 110 and image acquisition unit 120, as described in connection with step 3010 of FIG. 30, above.

[0372] At step 3120, processing unit 110 may execute target monitoring module 2902 to locate a target object (e.g., target vehicle 200b) within the images received at step 3010 by analyzing the images, as described in connection with step 3020 of FIG. 30, above. At step 3125, processing unit 110 may execute target monitoring module 2902 to determine whether the target object (e.g., target vehicle 200b) is traveling in a lane different from primary vehicle 200a, using the techniques described in connection with step 3030 of FIG. 30, above. If target vehicle 200b is determined to be traveling in a lane different from primary vehicle 200a (step 3125, yes), processing unit 110 may decline to cause a response in primary vehicle 200a at step 3130. Alternatively, if system 100 determines that target vehicle 200b does not constitute an imminent risk of collision (e.g., target vehicle 200b a nonintersecting trajectory with primary vehicle 200a or a potential time to collision beyond a threshold such that the target object does not pose an imminent risk at the present time), processing unit 110 may decline to cause a response in primary vehicle 200a at step 3130. Otherwise (step 3125, no), process 3100 may conclude and no response occurs.

[0373] Stopping an Autonomously Driven Vehicle Using a Multi-Segment Braking Profile

[0374] System 100 may provide driver assist functionality that monitors and responds to environmental conditions to control the braking of vehicle 200. For instance, system 100 may detect, based on a plurality of images, an object that triggers the stopping of vehicle 200. For example, this object may include another vehicle in the vicinity of vehicle 200, a traffic light, and/or a traffic sign. System 100 may use a braking profile to slow and/or stop vehicle 200. According to some embodiments, the braking profile may include multiple segments, where deceleration is executed at different stages. For example, the braking profile may cause system 100 to stop vehicle 200 at a decreasing rate of deceleration.

[0375] By providing a braking profile that includes multiple segments, system 100 may cause vehicle 200 to operate in a manner that feels natural to a driver and/or passengers. For example, when a driver stops a vehicle at a traffic light, the brakes are typically not applied at a constant rate from the moment they are applied until the moment when the vehicle stops. Operating brakes in such a manner result in an abrupt stop at the end. Instead, the driver may apply the brakes gently at first, then with increasing pressure, and then as the vehicle reaches its target stopping location, the driver may decrease the level of braking until it reaches zero (or near zero) at the moment the car stops. Operating the vehicle

IPR2025-01034
Tesla EX1002 Page 1742

in this manner may provide a natural stopping progression, i.e., the driver may cause-a progressive deceleration at first so the vehicle does not experience an abrupt initial deceleration and then at the end, so that vehicle does not come to an abrupt stop.

[0376] System 100 may provide autonomous vehicle navigation that may implement braking according to an approach that feels natural to the driver and/or passengers of vehicle 200. For example, in some embodiments, system 100 may cause one or more of image capture devices 122-126 to acquire a plurality of images of an area in a vicinity of vehicle 200. Processing device 110 may receive the receive the plurality of images via data interface 128 and identify, based on analysis of the plurality of images, a trigger (e.g., an object, a traffic light, and/or a traffic sign) for stopping vehicle 200. Based on the identified trigger, system 100 may cause vehicle 200 to stop according to a braking profile. In some embodimenis, the braking profile may include a plurality of segments (e.g., including a first segment associated with a first deceleration rate, a second segment which includes a second deceleration rate less than the first deceleration rate, and a third segment in which a level of braking is decreased as a target stopping location is approached, as determined based on the analysis of the plurality of images.

[0377] FIG. 32A illustrates vehicle 200 traveling on a roadway 3210 that includes an object 3220. System 100 may identify a trigger (e.g., object 3220) for stopping vehicle 200 in respect to detection of the trigger. For example, system 100 may first slow vehicle 200 after the trigger is detected and bring vehicle 200 to a stop before reaching object 3220.

[0378] Processing unit 110 may be configured to determine a trigger for stopping vehicle 200 based on a plurality of images acquired by one or more of image capture devices 122–126. Processing unit 110 may receive the images from image capture devices 122-126 via data interface 128. According to some embodiments, the trigger may include object 3220. For example, object 3220 may be another vehicle on roadway 2810. According to some embodiments, processing unit 110 may identify a trigger if object 3220 is within a certain vicinity of vehicle 200. For example, identification of the trigger may depend on a relative distance between object 3220 and vehicle 200. Further, this identification may optionally consider the relative velocity and/or relative acceleration between object 3220 and vehicle 200.

[0379] Additionally or alternatively, the trigger may include a traffic sign, such as traffic sign 3240 shown in FIG. 32A. For example, traffic sign 3240 may be a stop sign and/or a speed limit sign. According to some embodiments, processing unit 110 may process the plurality of images to determine the content of traffic sign 3240 as part of determining whether a trigger exists. For example, processing unit 110 may determine that a trigger is present based on a speed limit specified by traffic sign 3240 if vehicle 200 is exceeding the speed limit. As another example, processing unit 110 may determine a trigger exists based on a traffic light 2830 if the yellow and/or red light is on.

[0380] Based on the plurality of images, processing unit 110 may determine a target stopping location 3250 at which vehicle 200 will stop once a braking profile is executed. Reaching target stopping location 3250 may be accompanied by a release in braking pressure of vehicle 200. Target stopping location 3250 may be based on the location of traffic light 3230 and/or traffic sign 3240 such that vehicle 200 complies with traffic light 3230 and/or traffic sign 3240. Alternatively, target stopping location 3250

IPR2025-01034
Tesla EX1002 Page 1743

may be based on object 3220 such that vehicle 200 stops before reaching object 3220. Accordingly, target stopping location 3250 may be based on the location of object 3220 to avoid a collision between vehicle 200 and object 3220. In some embodiments, target stopping location 3250 may be updated based on new information obtained from the plurality of images, such as newly identified targets, newly visible obstacles, newly visible signs, etc.

[0381] FIG. 32B illustrates an exemplary braking profile, consistent with disclosed embodiments. In the example shown in FIG. 32B, the braking profile includes four segments. However, the number of segments is exemplary and a braking profile consistent with the disclosed embodiments may include any appropriate number of segments (e.g., 2, 3, 4, 5, 6, etc., segments).

[0382] In segment 1, system 100 may prepare for a possible braking scenario. For example, in this zone, system 100 may receive information (e.g., map data and/or image data) about an upcoming intersection (e.g., an intersection with traffic lights). System 100 may gradually reduce the speed of vehicle 200 (e.g., the speed of vehicle 200 may be gradually reduced to about 70-50 km/hr, depending on the characteristics of the intersection). System 100 may cause the speed adjustment, for example, approximately 100-200 meters before the junction at average deceleration around 0.2-0.4 m/sec^2 (with a maximum of about 0.5 m/sec^2). By decreasing the speed of vehicle 200 in segment 1, system 100 may provide the driver and/or passengers of vehicle 200 with confidence that system 100 is aware of the approaching intersection.

[0383] In segment 2, system 100 may apply strong braking. In this segment, system 100 may receive information based on the analysis of image data that, for example, a traffic light is red and/or there is a stopped vehicle at the intersection in the line in which vehicle 200 is traveling. System 100 may cause vehicle 200 to experience significant speed reduction in this zone, while the distance to the stop line or stopped vehicle is still large. Doing so may provide the driver and/or passengers of vehicle 200 with a comfortable feeling that system 100 will have more than enough space to complete the braking maneuver. This zone may be approximately 30-100 meters away from the stop line, and the average deceleration may be about 1.5-2.5 m/sec^2 (with a maximum of about 3.5 m/sec^2).

[0384] In segment 3, system 100 may make a moderate braking adjustment. For example, in this segment, system 100 may adjust the speed of vehicle 200 according to the remaining distance to the stop line or stopped vehicle and based on the current speed and deceleration of vehicle 200. By making this adjustment, system 100 may provide the driver and/or passengers of vehicle 200 with an indication that system 100 is releasing most of the braking power while the speed is still being reduced but slower than before. This zone may be approximately 5-30 meters away from the stop line or stopped vehicle, and the average deceleration may be about 0.5-1.5 m/sec^2 (with a maximum of about 2 m/sec^2).

[0385] In segment 4, system 100 may make a small braking adjustment. In this segment, system 100 may close the remaining distance to the stop line or stopped vehicle at a very low speed gradually bringing it to zero. In this zone, the driver and/or passengers may feel that vehicle 200 is slowly sliding into its position (e.g., at the stop line or behind another vehicle). This zone may constitute approximately

IPR2025-01034
Tesla EX1002 Page 1744

the last 5-7 meters to the stop line or stopped vehicle, and the average deceleration may be about 0.3-0.5 m/sec^2 (with a maximum of about 1 m/sec^2).

[0386] FIG. 33 is an exemplary block diagram of memory 140 and/or 150, which may store instructions for performing one or more operations consistent with disclosed embodiments. As illustrated in FIG. 33, memory 140 may store one or more modules for performing the trigger detection and responses described herein. For example, memory 140 may store a trigger identification module 3300 and an action response module 3310.

[0387] Trigger identification module 3300 may store instructions which, when executed by processing unit 110, may detect the presence and/or existence of a trigger for stopping vehicle 200. For example, trigger identification module 3300 may process the plurality of images received from at least one image capture device 122--124 to detect the presence of a trigger. As discussed above, this may include identifying object 3220, traffic light 3230, and/or traffic sign 3240.

[0388] Action response module 3310 may store instructions which, when executed by processing unit 110, may respond to the presence of a trigger. For example, action response module 3310 may execute control to decelerate and/or stop vehicle 200. For example, action response module 3310 may execute a braking profile to decelerate and/or stop vehicle 200. The action response module 3310 may determining to execute one of a plurality of braking profiles based on a number of braking profiles based on, for example, environmental factors, the type of trigger detected, and the velocity of vehicle 200. To navigate vehicle 200 to a stop based on the detected trigger, processing unit 110 may transmit electronic signals to one or more of throttling system 220, braking system 230, and/or steering system 240 of vehicle 200. Further, one or more actuators may control throttling system 220, braking system 230, and/or steering system 240. For example, processing unit 110 may transmit electronic signals that cause system 100 to physically depress the brake by a predetermined amount.

[0389] Fig. 34 illustrates a process 3400 for navigating vehicle 200, consistent with disclosed embodiments. Process 3000 may identify a trigger (e.g., an object, vehicle, traffic light, traffic sign, etc.) for stopping vehicle 200 and execute a braking profile in response to the detection of the trigger. Process 3400 may detect various types of triggers determine which of a plurality of braking profiles to execute.

[0390] The braking profile may be based on the type of a detected trigger and/or other environmental conditions related to the detected trigger (e.g., a distance to an object). For example, in some embodiments, the braking profile may include a plurality of segments (e.g., three segments). In a three segment braking profile, a first segment of the braking profile may be associated with a first deceleration rate, a second segment of the braking profile may include a second deceleration rate less than the first deceleration rate, and a third segment of the braking profile may include causing a level of braking to be decreased as a target stopping location is approached, as determined based on an analysis of a plurality of images acquired by one or more of image capture devices 122-126. For example, in some embodiments, the first segment may cause vehicle 200 to progressively increase deceleration, the second segment may cause vehicle 200 to decelerate at a constant rate, and the third segment may cause vehicle 200 to progressively decrease its deceleration rate to zero (or near zero).

IPR2025-01034
Tesla EX1002 Page 1745

[0391] At step 3410, process 3400 may acquire, using at least one of image capture devices 122-126, a plurality of images of an area in the vicinity of vehicle 200. For example, processing unit 110 may receive the plurality of images may through data interface 128. Processing unit 110 may be configured to determine the presence of one or more objects and/or signs located on or near roadway 3210 based on the acquired images. For example, processing unit 110 may be configured to determine the presence of object 3220, traffic light 3230, and/or traffic sign 3240. Processing unit 110 may be further configured to read the content of traffic sign 3240. For example, processing unit 110 may be configured to differentiate between a speed limit sign and a stop sign. Further, processing unit 110 may be configured to process images to determine the speed limit based on traffic sign 3240.

[0392] At step 3420, process 300 may include a trigger for stopping vehicle 200. For example, processing unit 110 may identify a trigger based on the presence of object 3220 within the vicinity of vehicle 200. Additionally or alternatively, processing unit 110 may identify a trigger based on a current signal status of traffic light 3230. According to some embodiments, processing unit 110 may determine that traffic light 3230 constitutes a trigger if it is not green. According to some embodiments, processing unit 110 may determine that traffic sign 3240 constitutes a trigger if it is a stop sign, for example. In some embodiments, traffic sign 3240 may constitute a trigger if it is a speed limit sign and vehicle 200 is exceeding the posted speed limit. Further in some embodiments, processing unit 110 may cause system 100 to provide an audible announcement identifying the trigger and/or indicating that vehicle 200 is braking or about to begin braking.

[0393] After processing unit 110 identifies the trigger, at step 3430, processing unit 110 may cause vehicle 200 to slow down and/or stop according to a braking profile. In some embodiments, the braking profile may comprise a number of profile segments. The different profile segments of a braking profile may be defined by a time period and/or a vehicle speed. For example, processing unit 110 may execute controls of vehicle 200 in accordance with a first profile segment for a predetermined period of time or until the speed of vehicle 200 reaches a target value. The target value may be a predetermined speed or it may be a percentage of the speed that vehicle 200 was traveling prior to execution of the braking profile. To implement the braking profile, processing unit 110 may transmit electronic signals to one or more of throttling system 220, braking system 230, and/or steering system 240 of vehicle 200. Further, one or more actuators may control throttling system 220, braking system 230, and/or steering system 240.

[0394] As discussed above, according to some embodiments, a profile segment of the braking profile may correspond to a deceleration rate. For example, a braking profile may include multiple segments, and the first segment may be associated with a first deceleration rate. The braking profile may further include a second segment associated with a second deceleration rate. The second deceleration rate may be less than first deceleration rate.

[0395] Further, as discussed above, according to some embodiments, braking profile may include a third profile segment in which a level of braking is decreased as a function of the distance between vehicle 200 and underlying factors that give rise to the trigger (e.g., object 3220, traffic light

IPR2025-01034
Tesla EX1002 Page 1746

3230, traffic sign 3240). For example, the braking profile may include decreasing the level of braking as vehicle 200 approaches target stopping location 3250. Further, reaching target stopping location 3250 may be accompanied by a release in braking pressure of vehicle 200.

[0396] The foregoing description has been presented for purposes of illustration. It is not exhaustive and is not limited to the precise forms or embodiments disclosed. Modifications and adaptations will be apparent to those skilled in the art from consideration of the specification and practice of the disclosed embodiments. Additionally, although aspects of the disclosed embodiments are described as being stored in memory, one skilled in the art will appreciate that these aspects can also be stored on other types of computer readable media, such as secondary storage devices, for example, hard disks or CD ROM, or other forms of RAM or ROM, USB media, DVD, Blu-ray, or other optical drive media.

[0397] Computer programs based on the written description and disclosed methods are within the skill of an experienced developer. The various programs or program modules can be created using any of the techniques known to one skilled in the art or can be designed in connection with existing software. For example, program sections or program modules can be designed in or by means of .Net Framework, .Net Compact Framework (and related languages, such as Visual Basic, C, etc.), Java, C++, Objective-C, HTML, HTML/AJAX combinations, XML, or HTML with included Java applets.

[0398] Moreover, while illustrative embodiments have been described herein, the scope of any and all embodiments having equivalent elements, modifications, omissions, combinations (e.g., of aspects across various embodiments), adaptations and/or alterations as would be appreciated by those skilled in the art based on the present disclosure. The limitations in the claims are to be interpreted broadly based on the language employed in the claims and not limited to examples described in the present specification or during the prosecution of the application. The examples are to be construed as non-exclusive. Furthermore, the steps of the disclosed methods may be modified in any manner, including by reordering steps and/or inserting or deleting steps. It is intended, therefore, that the specification and examples be considered as illustrative only, with a true scope and spirit being indicated by the following claims and their full scope of equivalents.

[0002] Also described herein are the following aspects:

1. A driver assist navigation system for a primary vehicle, the system comprising:

at least one image capture device configured to acquire a plurality of images of an area in a vicinity of the primary vehicle;
a data interface; and
at least one processing device configured to:

receive the plurality of images via the data interface;
determine, from at least some of the plurality of images, a first lane constraint on a first side of the primary vehicle;
determine, from at least some of the plurality of images, a second lane constraint on a second side of the primary vehicle opposite to the first side of the primary vehicle, wherein the first and second lane constraints define a lane within which the primary vehicle travels;
cause the primary vehicle to travel within the first and second lane constraints;
locate in the plurality of images a leading vehicle;
determine, based on the plurality of images, at least one action taken by the leading vehicle; and

IPR2025-01034
Tesla EX1002 Page 1747

cause the primary vehicle to mimic the at least one action of the leading vehicle.

2. The system of aspect 1, wherein at least one of the first and second lane constraints includes a line marked on a road surface.
3. The system of aspect 1, wherein at least one of the first and second lane constraints includes an edge of a road surface.
4. The system of aspect 1, wherein at least one of the first and second lane constraints includes a determined midpoint of a road surface width.
5. The system of aspect 1, wherein the at least one action taken by the leading vehicle includes a turn, and the at least one processing device causes the primary vehicle to execute a similar turn beginning at a location at which the leading vehicle initiated its turn.
6. The system of aspect 1, wherein the at least one action taken by the leading vehicle includes an acceleration.
7. The system of aspect 1, wherein the at least one action taken by the leading vehicle includes braking.
8. The system of aspect 1, wherein the at least one action taken by the leading vehicle includes providing a first offset distance on a side of the leading vehicle adjacent to the first lane constraint that is different from a second offset distance on a side of the leading vehicle adjacent to the second lane constraint.
9. The system of aspect 1, wherein the at least one processing device is further configured to:

determine, based on the plurality of images or based on map data and position information, whether the leading vehicle is turning at an intersection; and
if the leading vehicle is determined to be turning at an intersection, decline to mimic the turn of the leading vehicle.

10. The system of aspect 1, wherein the at least one processing device is further configured to:

determine, based on the plurality of images or based on map data and position information, whether the leading vehicle is turning at an intersection;
determine whether the leading vehicle is changing lanes within the intersection;
mimic the turn of the leading vehicle if the leading vehicle is determined to be turning at an intersection and not changing lanes within the intersection; and
decline to mimic the turn of the leading vehicle if the leading vehicle is determined to be turning at an intersection, but changing lanes within the intersection.

11. The system of aspect 1, wherein the at least one processing device is further configured to:

acquire a first leading vehicle based on the plurality of images;
acquire a second leading vehicle based on the plurality of images; and
cause the primary vehicle to mimic the first leading vehicle if, based on the plurality of images, the first leading vehicle is determined to be continuing on a path having less of a turning radius than a path followed by the second leading vehicle.

12. The system of aspect 1, wherein the at least one processing device is further configured to:

determine position information for the leading vehicle and compare the position information to predetermined map data;
create a navigation history for the leading vehicle by tracking movements of the leading vehicle relative to the predetermined map data; and
determine whether to cause the primary vehicle to mimic the at least one action of the leading vehicle based on the navigation history of the leading vehicle.

13. The system of aspect 12, wherein the at least one processing device is configured to:

cause the primary vehicle to mimic a turn of the leading vehicle, even where no turn is detected based on the plurality of images, when the navigation history indicates that the leading vehicle has successfully navigated at least one prior turn.

14. A primary vehicle, comprising:

a body;

IPR2025-01034
Tesla EX1002 Page 1748

at least one image capture device configured to acquire a plurality of images of an area in a vicinity of the primary vehicle;
a data interface; and
at least one processing device configured to:

receive the plurality of images via the data interface;
determine, from at least some of the plurality of images, a first lane constraint on a first side of the primary vehicle;
determine, from at least some of the plurality of images, a second lane constraint on a second side of the primary vehicle opposite to the first side of the primary vehicle, wherein the first and second lane constraints define a lane within which the primary vehicle travels;
cause the primary vehicle to travel within the first and second lane constraints;
locate in the plurality of images a leading vehicle;
determine, based on the plurality of images, at least one action taken by the leading vehicle; and
cause the primary vehicle to mimic the at least one action of the leading vehicle.

15. The primary vehicle of aspect 14, wherein at least one of the first and second lane constraints includes a line marked on a road surface.
16. The primary vehicle of aspect 14, wherein at least one of the first and second lane constraints includes an edge of a road surface.
17. The primary vehicle of aspect 14, wherein at least one of the first and second lane constraints includes a determined midpoint of a road surface width.
18. The primary vehicle of aspect 14, wherein the at least one action taken by the leading vehicle includes a turn, and the at least one processing device causes the primary vehicle to execute a similar turn beginning at a location at which the leading vehicle initiated its turn.
19. The primary vehicle of aspect 14, wherein the at least one action taken by the leading vehicle includes an acceleration.
20. The primary vehicle of aspect 14, wherein the at least one action taken by the leading vehicle includes braking.
21. The primary vehicle of aspect 14, wherein the at least one action taken by the leading vehicle includes providing a first offset distance on a side of the leading vehicle adjacent to the first lane constraint that is different from a second offset distance on a side of the leading vehicle adjacent to the second lane constraint.
22. The primary vehicle of aspect 14, wherein the at least one processing device is further configured to:

determine, based on the plurality of images or based on map data and position information, whether the leading vehicle is turning at an intersection; and
if the leading vehicle is determined to be turning at an intersection, decline to mimic the turn of the leading vehicle.

23. The primary vehicle of aspect 14, wherein the at least one processing device is further configured to:

determine, based on the plurality of images or based on map data and position information, whether the leading vehicle is turning at an intersection;
determine whether the leading vehicle is changing lanes within the intersection;
mimic the turn of the leading vehicle if the leading vehicle is determined to be turning at an intersection and not changing lanes within the intersection; and
decline to mimic the turn of the leading vehicle if the leading vehicle is determined to be turning at an intersection, but changing lanes within the intersection.

24. The primary vehicle of aspect 14, wherein the at least one processing device is further configured to:

acquire a first leading vehicle based on the plurality of images;
acquire a second leading vehicle based on the plurality of images; and
cause the primary vehicle to mimic the first leading vehicle if, based on the plurality of images, the first leading vehicle is determined to be continuing on a path having less of a turning radius than a path followed by the second leading vehicle.

25. The primary vehicle of aspect 14, wherein the at least one processing device is further configured to:

determine position information for the leading vehicle and compare the position information to predetermined

IPR2025-01034
Tesla EX1002 Page 1749

map data;
create a navigation history for the leading vehicle by tracking movements of the leading vehicle relative to the predetermined map data; and
determine whether to cause the primary vehicle to mimic the at least one action of the leading vehicle based on the navigation history of the leading vehicle.

26. The primary vehicle of aspect 25, wherein the at least one processing device is configured to:
cause the primary vehicle to mimic a turn of the leading vehicle, even where no turn is detected based on the plurality of images, when the navigation history indicates that the leading vehicle has successfully navigated at least one prior turn.

27. A method for navigating a primary vehicle, the method comprising:

acquiring, using at least one image capture device, a plurality of images of an area in a vicinity of the primary vehicle;
determining, from at least some of the plurality of images, a first lane constraint on a first side of the primary vehicle;
determining, from at least some of the plurality of images, a second lane constraint on a second side of the primary vehicle opposite to the first side of the primary vehicle, wherein the first and second lane constraints define a lane within which the primary vehicle travels;
causing the primary vehicle to travel within the first and second lane constraints;
locating in the plurality of images a leading vehicle;
determining, based on the plurality of images, at least one action taken by the leading vehicle; and
causing the primary vehicle to mimic the at least one action of the leading vehicle.

Claims

1. A computer-implemented method for navigating a vehicle, the method comprising:

acquiring, using at least one image capture device, a plurality of images of an area in a vicinity of the vehicle;
recognizing a curve to be navigated based on map data and vehicle position information;
determining an initial target velocity for the vehicle based on at least one characteristic of the curve as reflected in the map data;
adjusting a velocity of the vehicle to the initial target velocity;
determining, based on the plurality of images, one or more observed characteristics of the curve;
determining an updated target velocity based on the one or more observed characteristics of the curve; and
adjusting the velocity of the vehicle to the updated target velocity.

2. The method of claim 1, wherein the at least one characteristic of the curve includes an expected radius of curvature for the curve as determined from the map data.

3. The method of claim 2, wherein the initial target velocity is determined based on the expected radius of curvature for the curve and a lateral acceleration limit.

4. The method of claim 3, wherein the lateral acceleration limit is between about 0.2 m/sec and 3.0 m/sec, optionally between about 1.5 m/sec and 3.0 m/sec.

5. The method of claim 3, wherein the lateral acceleration limit is adjusted based on a road width determined based on the plurality of images.

6. The method of claim 1, wherein the one or more observed characteristics of the curve include an actual radius of curvature for the curve as determined through analysis of the plurality of images.

7. The method of claim 6, wherein the updated target velocity is determined based on the actual radius of curvature for the curve and a lateral acceleration limit.

8. The method of claim 1, wherein the one or more observed characteristics of the curve include a rate of change in an actual radius of curvature for the curve as determined through analysis of the plurality of images.

IPR2025-01034
Tesla EX1002 Page 1750

9. The method of claim 1, wherein the one or more observed characteristics of the curve include a degree of banking associated with the curve as determined through analysis of the plurality of images.

10. The method of claim 1, wherein the one or more observed characteristics of the curve include information, determined through analysis of the plurality of images, relating to the curve conveyed by one or more road signs.

11. The method of claim 1, wherein the initial target velocity is also based on a focal range of the at least one image capture device.

12. The method of claim 1, wherein the initial target velocity is also based on whether a traffic light is determined to be located along the curve.

13. The method of claim 1, wherein the initial target velocity is also based on whether a traffic light is determined to be located within a predetermined distance after the curve.

14. A driver assist navigation system for a vehicle, the system comprising:

at least one image capture device configured to acquire a plurality of images of an area in a vicinity of the vehicle;
a data interface; and
at least one processing device configured to receive the plurality of image via the data interface and perform the method of any of the preceding claims.

15. A vehicle, comprising:

a body; and
a driver assist navigation system according to claim 14.

IPR2025-01034
Tesla EX1002 Page 1751

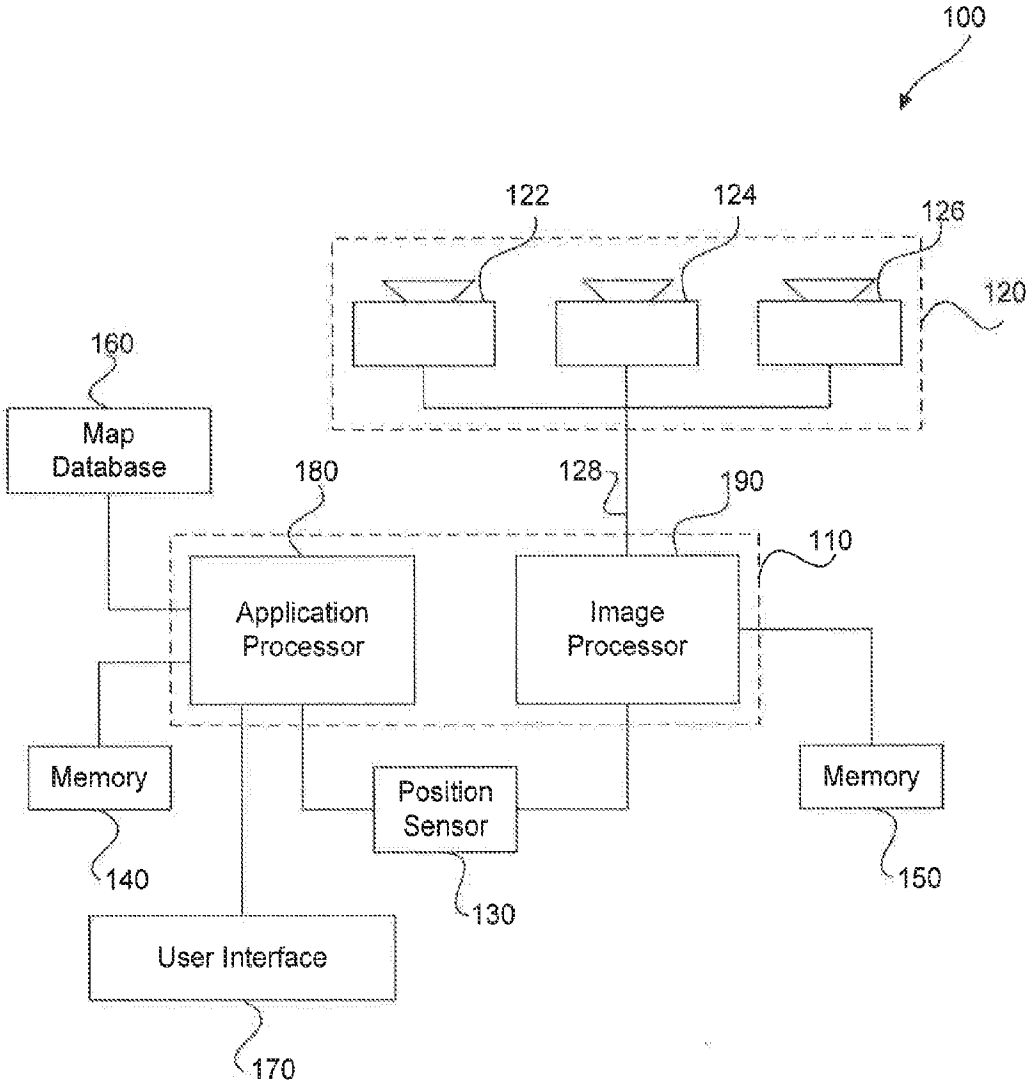
100
122
124
126
120
160
Map Database
180
128
190
110
Application Processor
Image Processor
Memory
Position Sensor
Memory
140
130
150
User Interface
170

FIG. 1

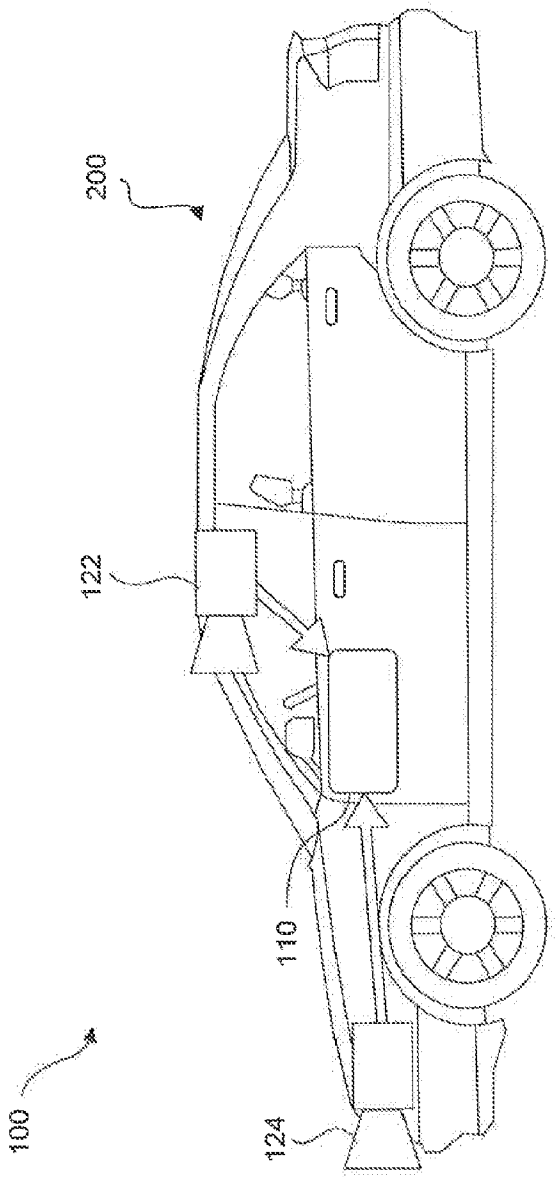

FIG. 2A

IPR2025-01034
Tesla EX1002 Page 1753

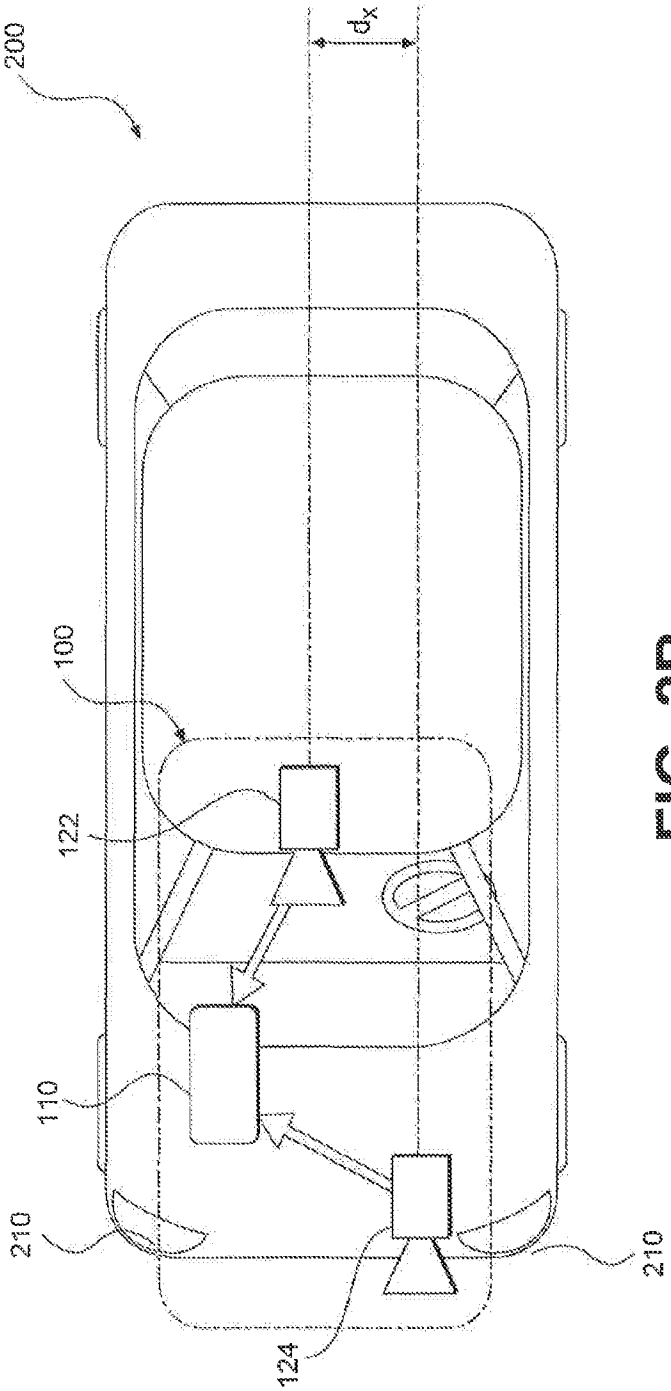

FIG. 2B

IPR2025-01034
Tesla EX1002 Page 1754

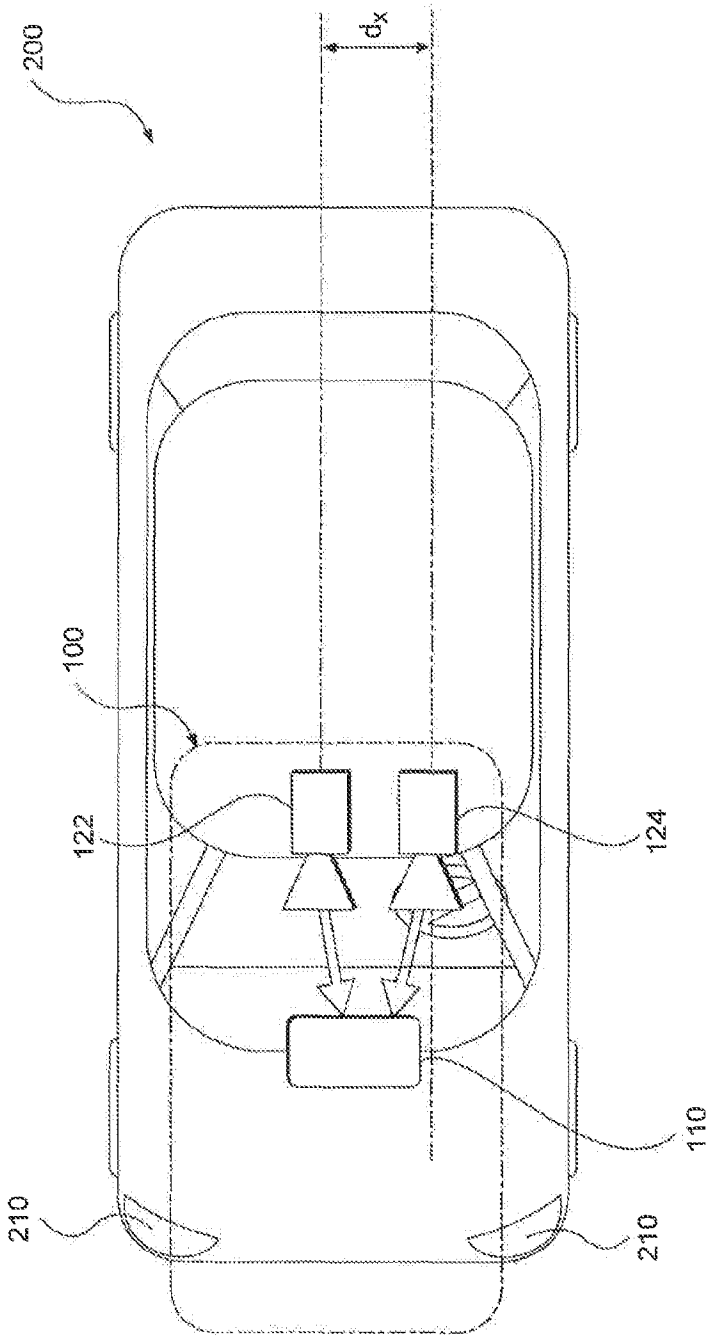

FIG. 2C

IPR2025-01034
Tesla EX1002 Page 1755

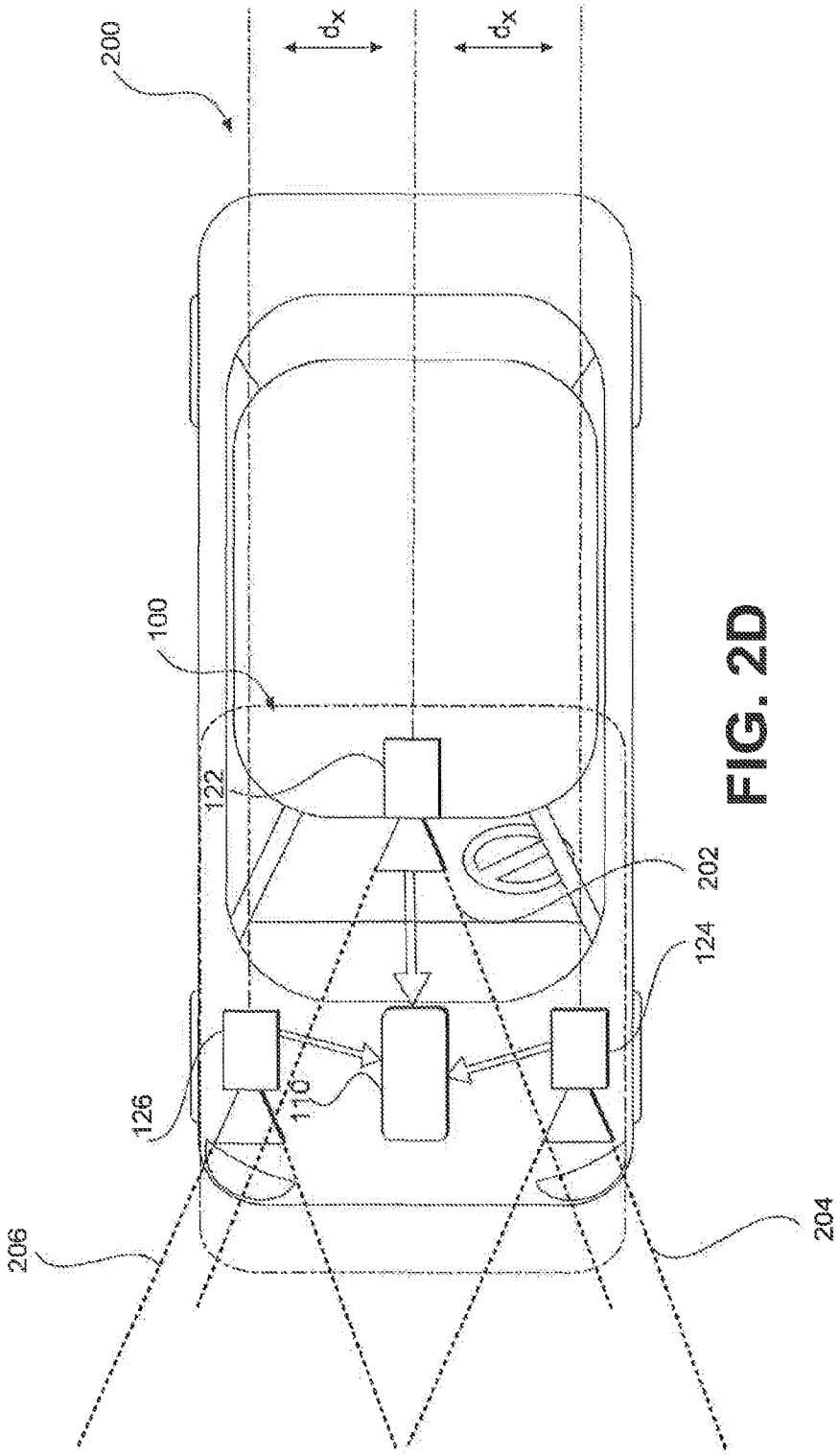

FIG. 2D

IPR2025-01034
Tesla EX1002 Page 1756

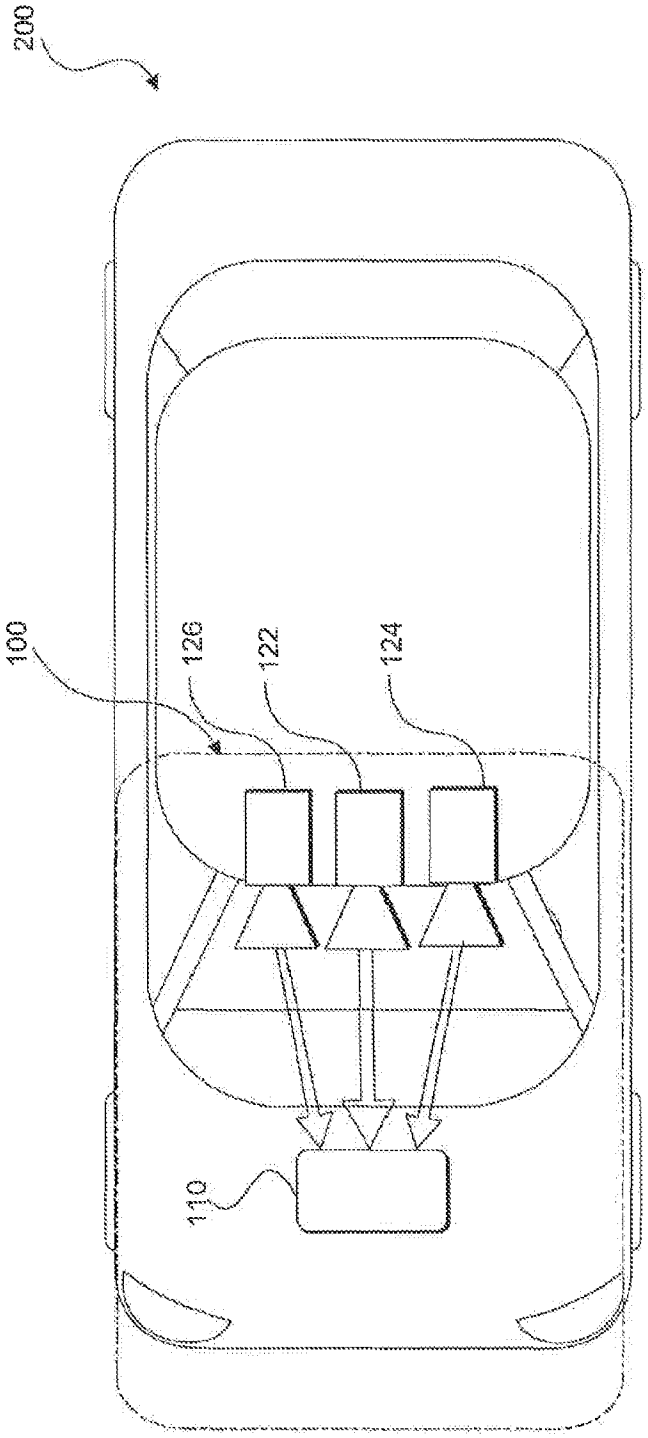

FIG. 2E

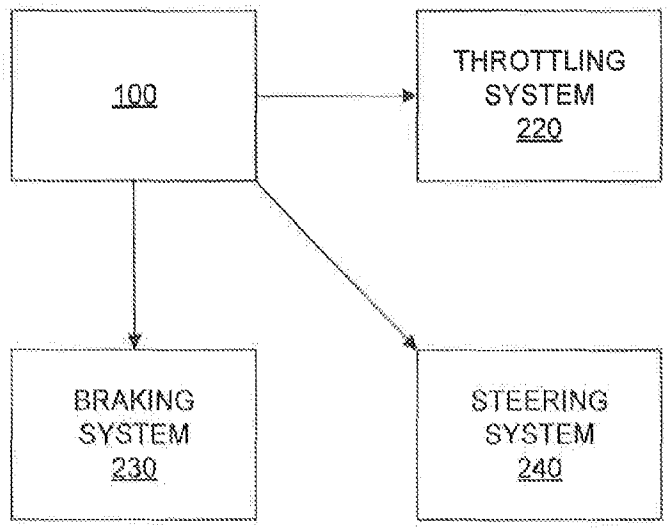
100
THROTTLING SYSTEM 220
BRAKING SYSTEM 230
STEERING SYSTEM 240

FIG. 2F

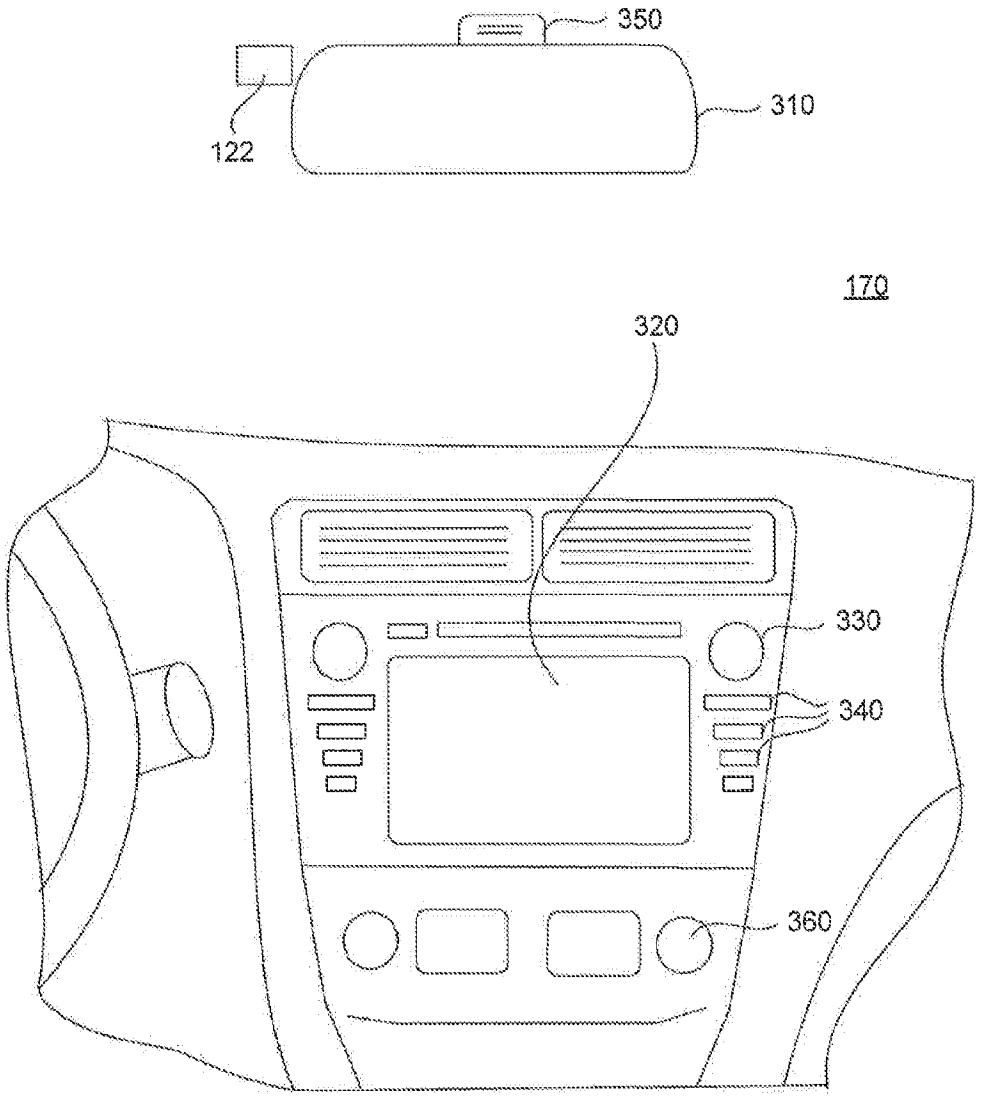

FIG. 3A

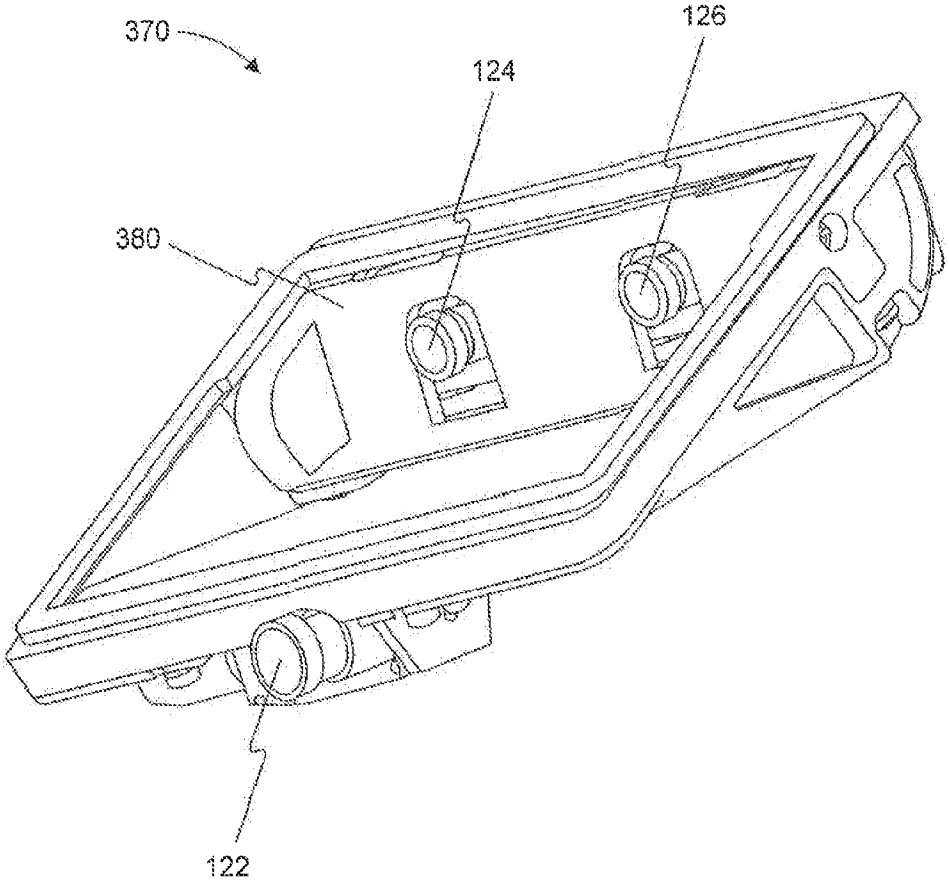

FIG. 3B

IPR2025-01034
Tesla EX1002 Page 1760

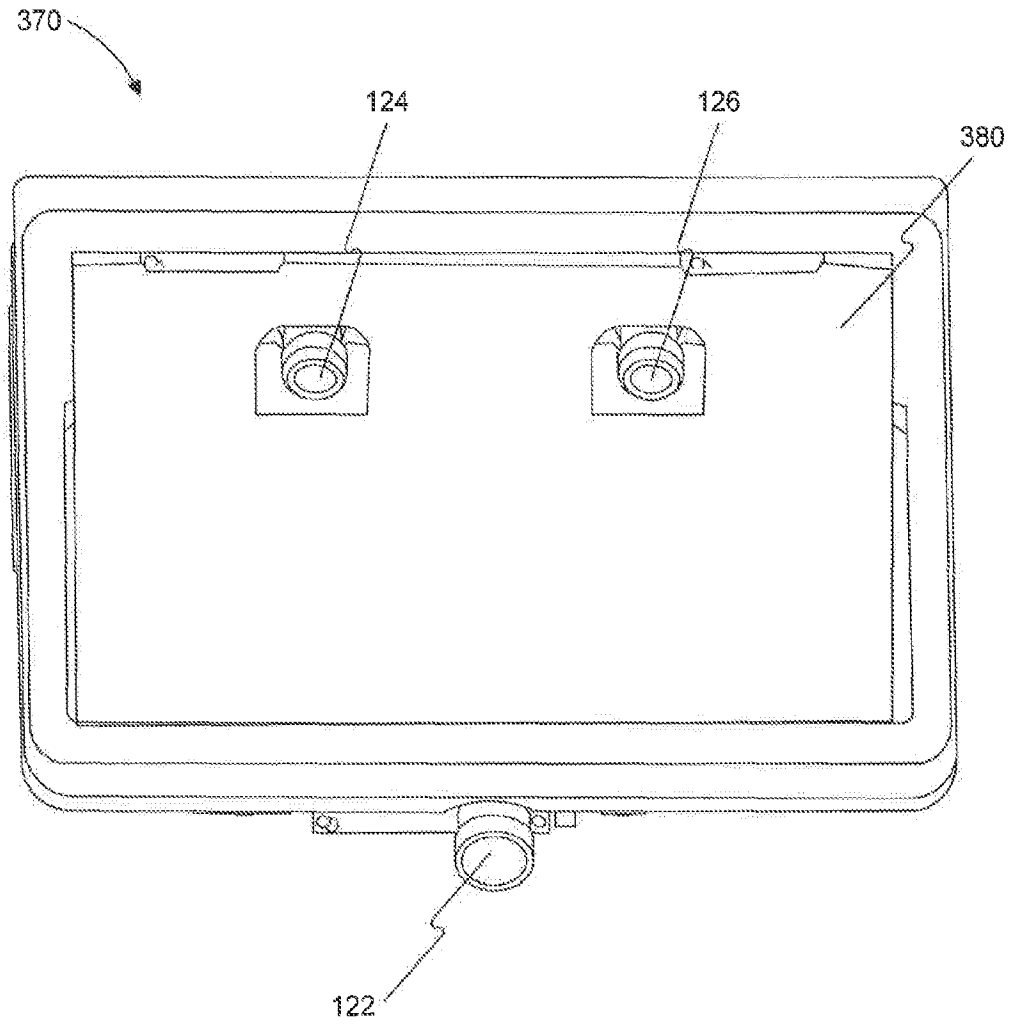

FIG. 3C

IPR2025-01034
Tesla EX1002 Page 1761

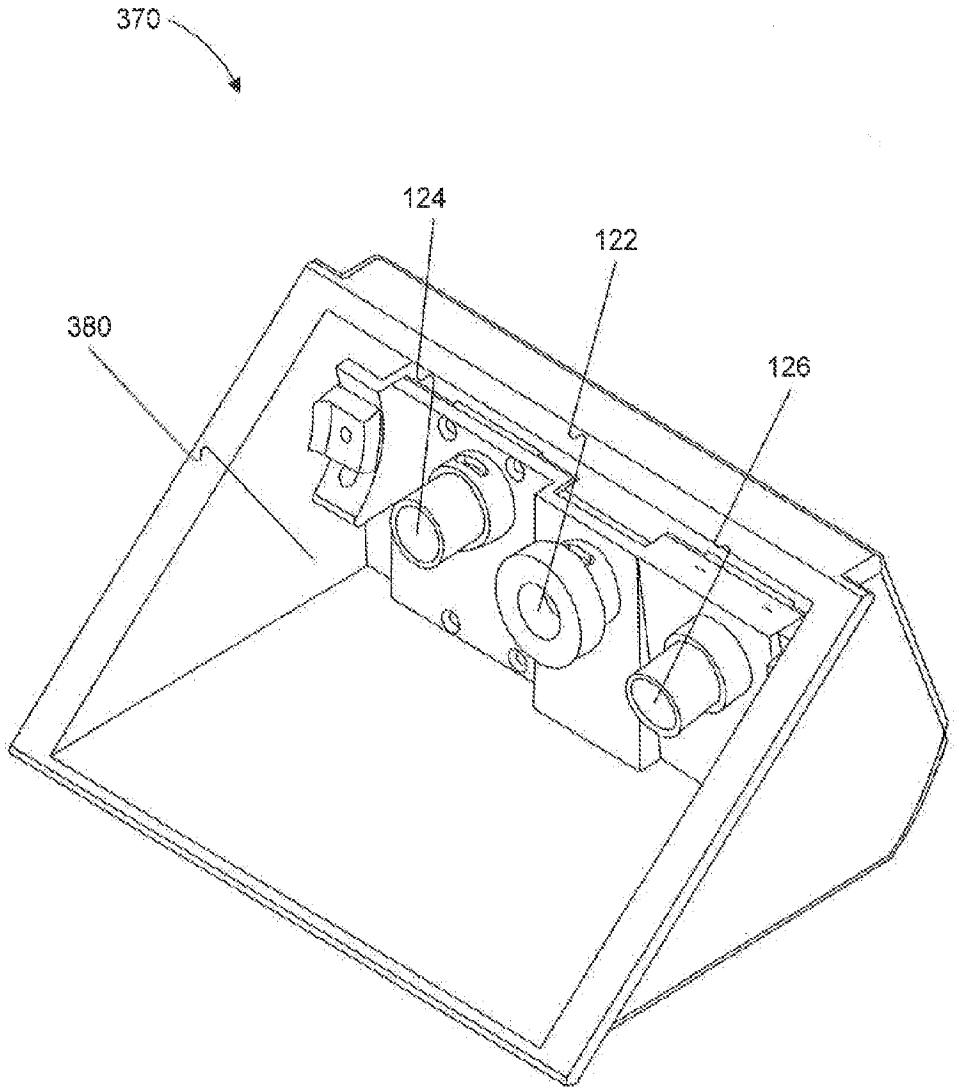

FIG. 3D

IPR2025-01034
Tesla EX1002 Page 1762

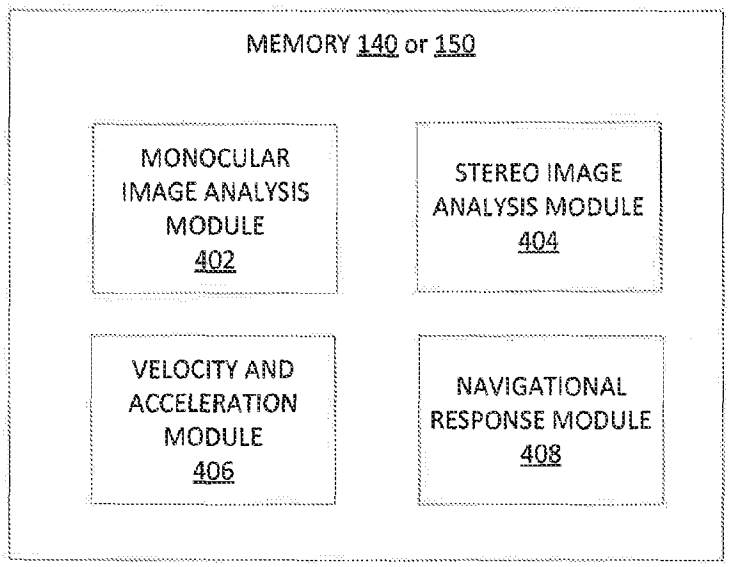
MEMORY 140 or 150
MONOCULAR IMAGE ANALYSIS MODULE 402
STEREO IMAGE ANALYSIS MODULE 404
VELOCITY AND ACCELERATION MODULE 406
NAVIGATIONAL RESPONSE MODULE 408

FIG. 4

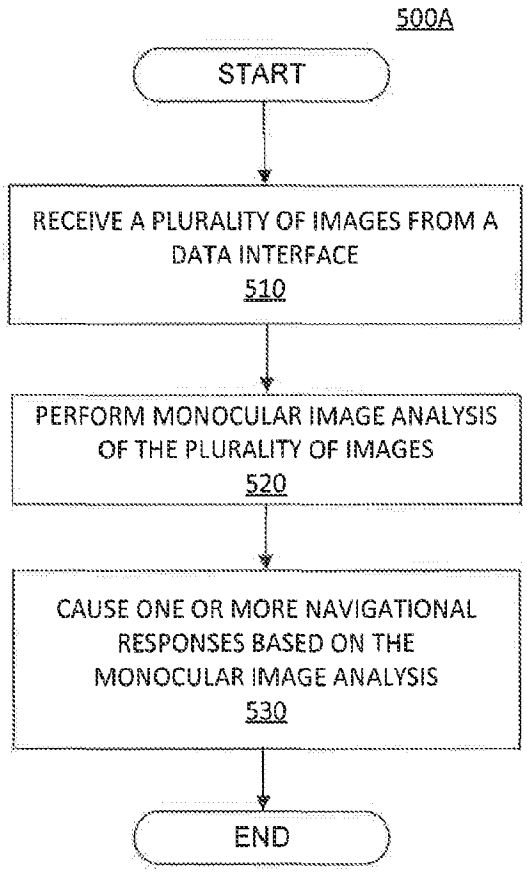
500A
START
RECEIVE A PLURALITY OF IMAGES FROM A DATA INTERFACE
510
PERFORM MONOCULAR IMAGE ANALYSIS OF THE PLURALITY OF IMAGES
520
CAUSE ONE OR MORE NAVIGATIONAL RESPONSES BASED ON THE MONOCULAR IMAGE ANALYSIS
530
END

FIG. 5A

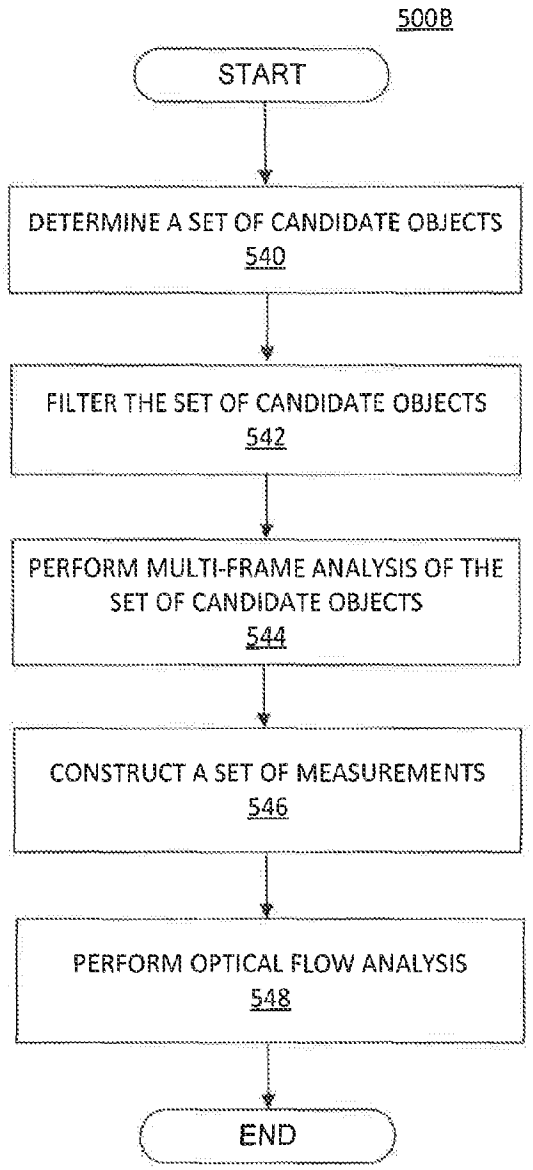

FIG. 5B

IPR2025-01034
Tesla EX1002 Page 1765

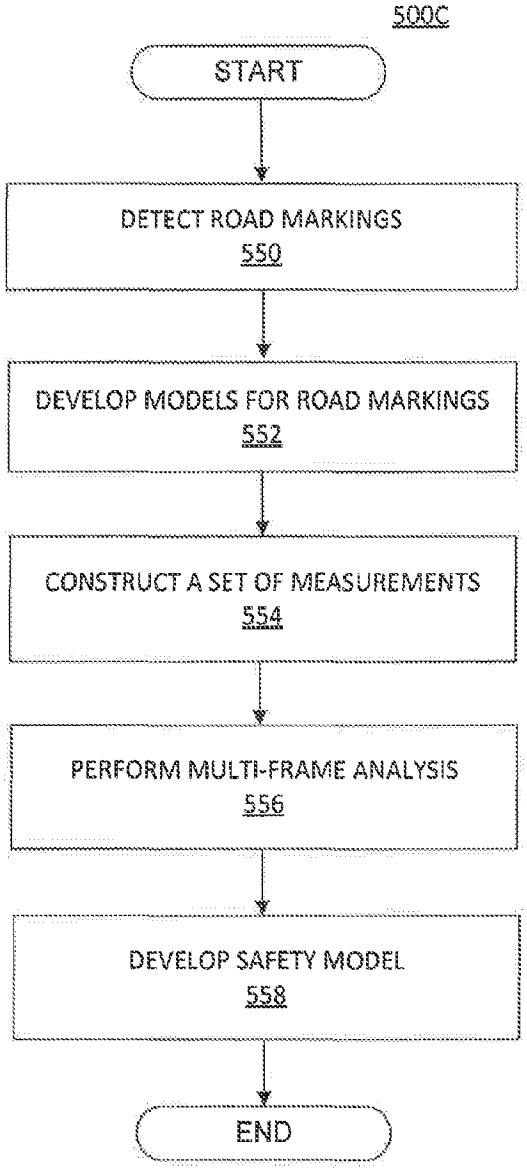

FIG. 5C

IPR2025-01034
Tesla EX1002 Page 1766

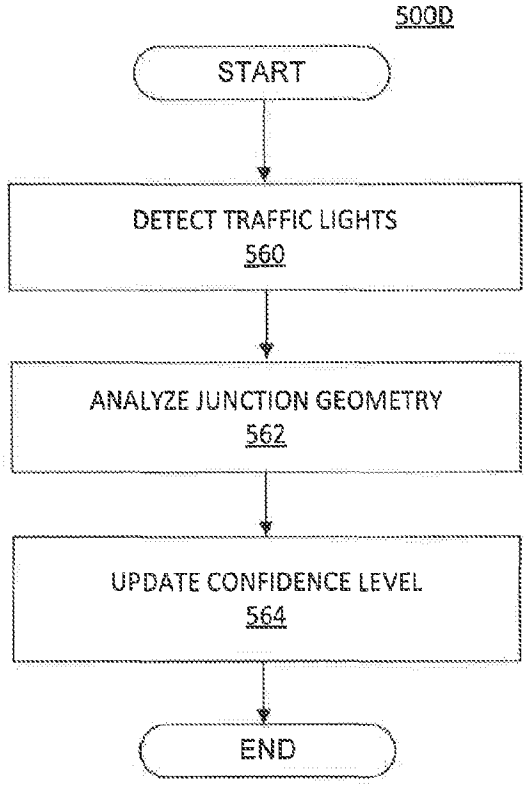
500D
START
DETECT TRAFFIC LIGHTS
560
ANALYZE JUNCTION GEOMETRY
562
UPDATE CONFIDENCE LEVEL
564
END

FIG. 5D

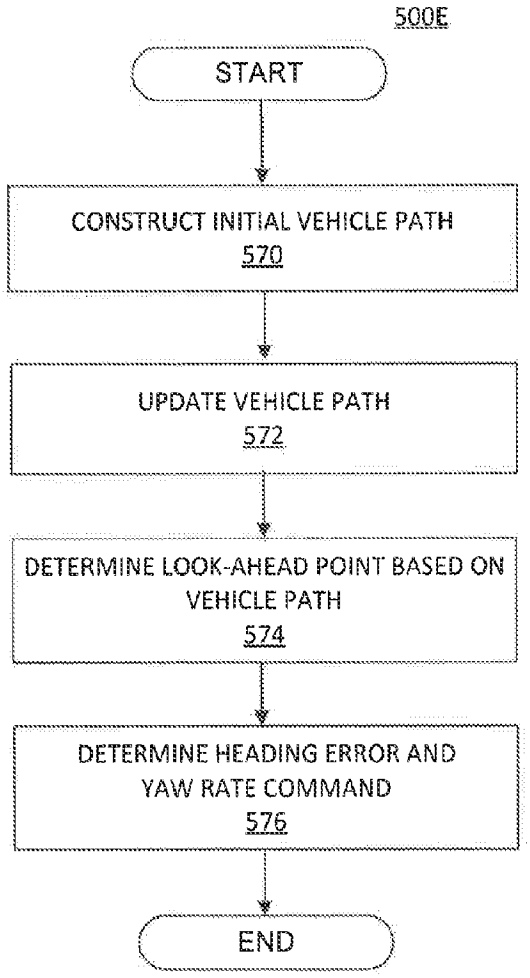

FIG. 5E

IPR2025-01034
Tesla EX1002 Page 1768

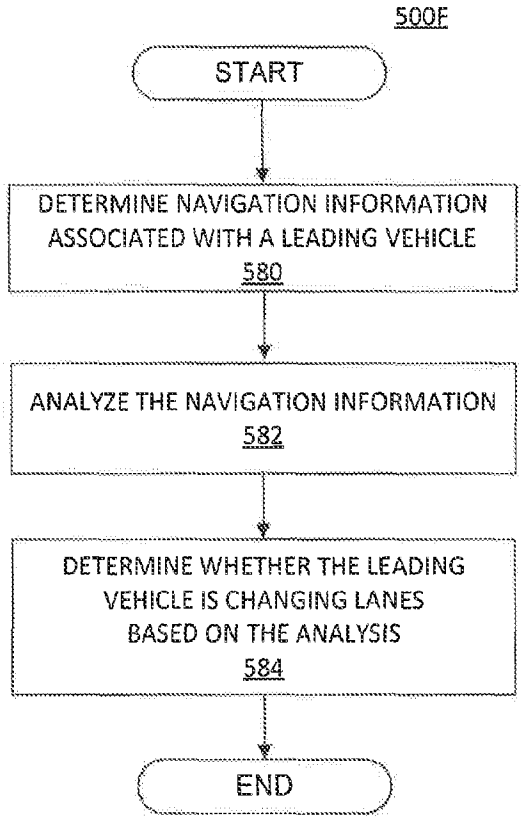
500F
START
DETERMINE NAVIGATION INFORMATION ASSOCIATED WITH A LEADING VEHICLE
580
ANALYZE THE NAVIGATION INFORMATION
582
DETERMINE WHETHER THE LEADING VEHICLE IS CHANGING LANES BASED ON THE ANALYSIS
584
END

FIG. 5F

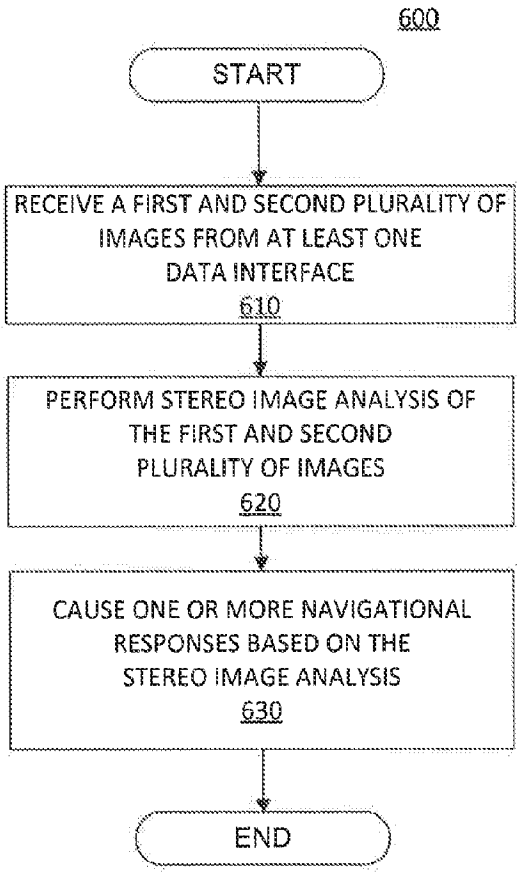
600
START
RECEIVE A FIRST AND SECOND PLURALITY OF IMAGES FROM AT LEAST ONE DATA INTERFACE
610
PERFORM STEREO IMAGE ANALYSIS OF THE FIRST AND SECOND PLURALITY OF IMAGES
620
CAUSE ONE OR MORE NAVIGATIONAL RESPONSES BASED ON THE STEREO IMAGE ANALYSIS
630
END

FIG. 6

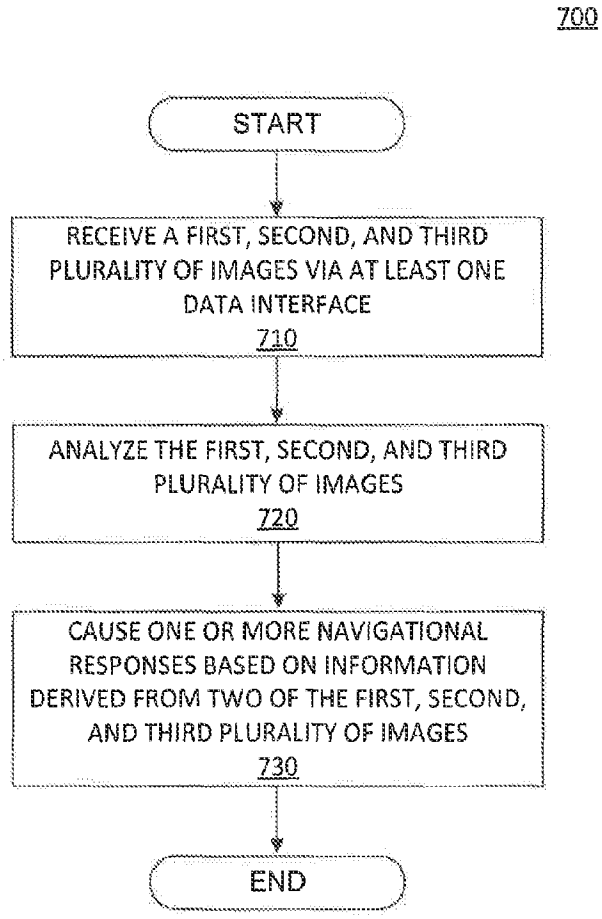
700
START
RECEIVE A FIRST, SECOND, AND THIRD PLURALITY OF IMAGES VIA AT LEAST ONE DATA INTERFACE
710
ANALYZE THE FIRST, SECOND, AND THIRD PLURALITY OF IMAGES
720
CAUSE ONE OR MORE NAVIGATIONAL RESPONSES BASED ON INFORMATION DERIVED FROM TWO OF THE FIRST, SECOND, AND THIRD PLURALITY OF IMAGES
730
END

FIG. 7

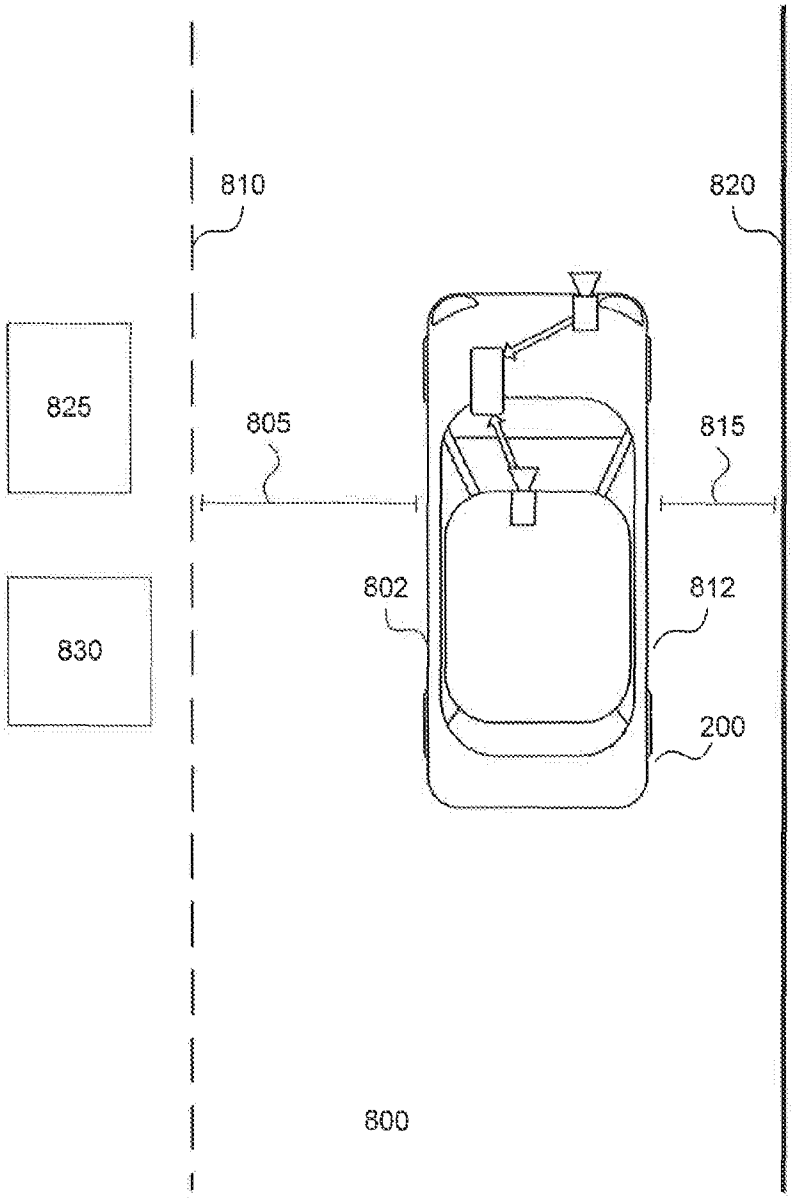

FIG. 8A

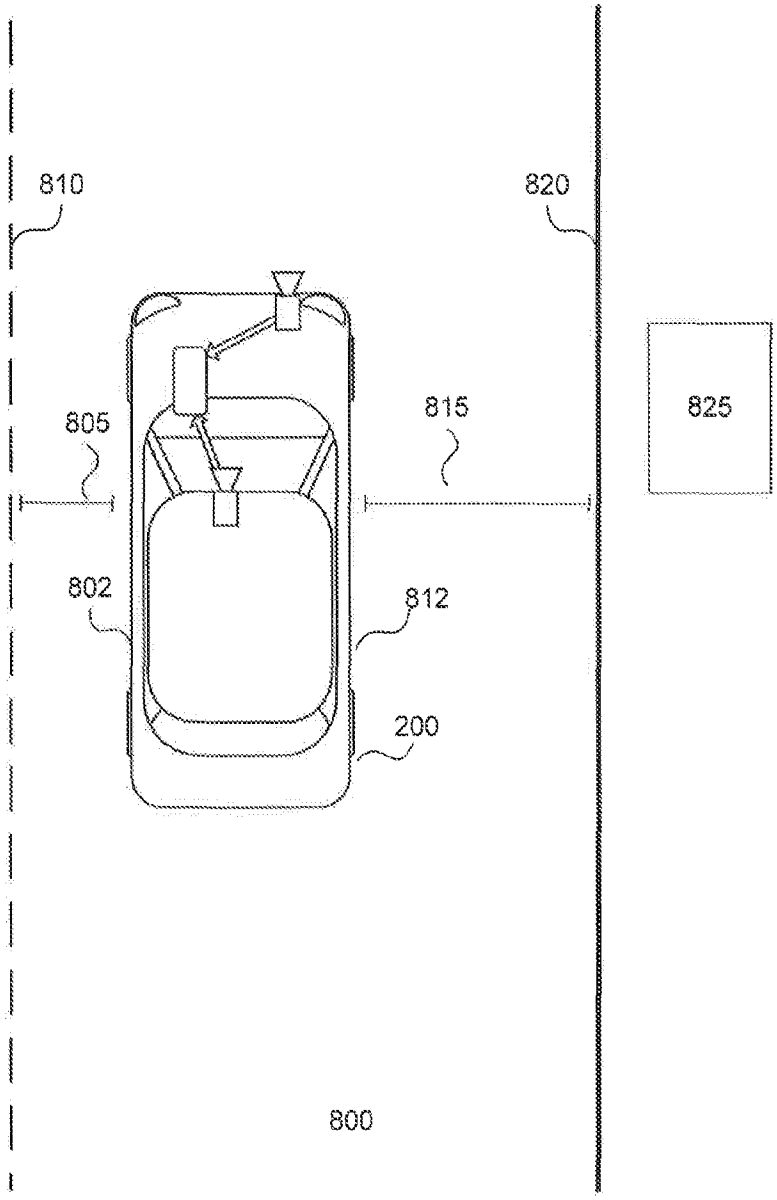

FIG. 8B

IPR2025-01034
Tesla EX1002 Page 1773

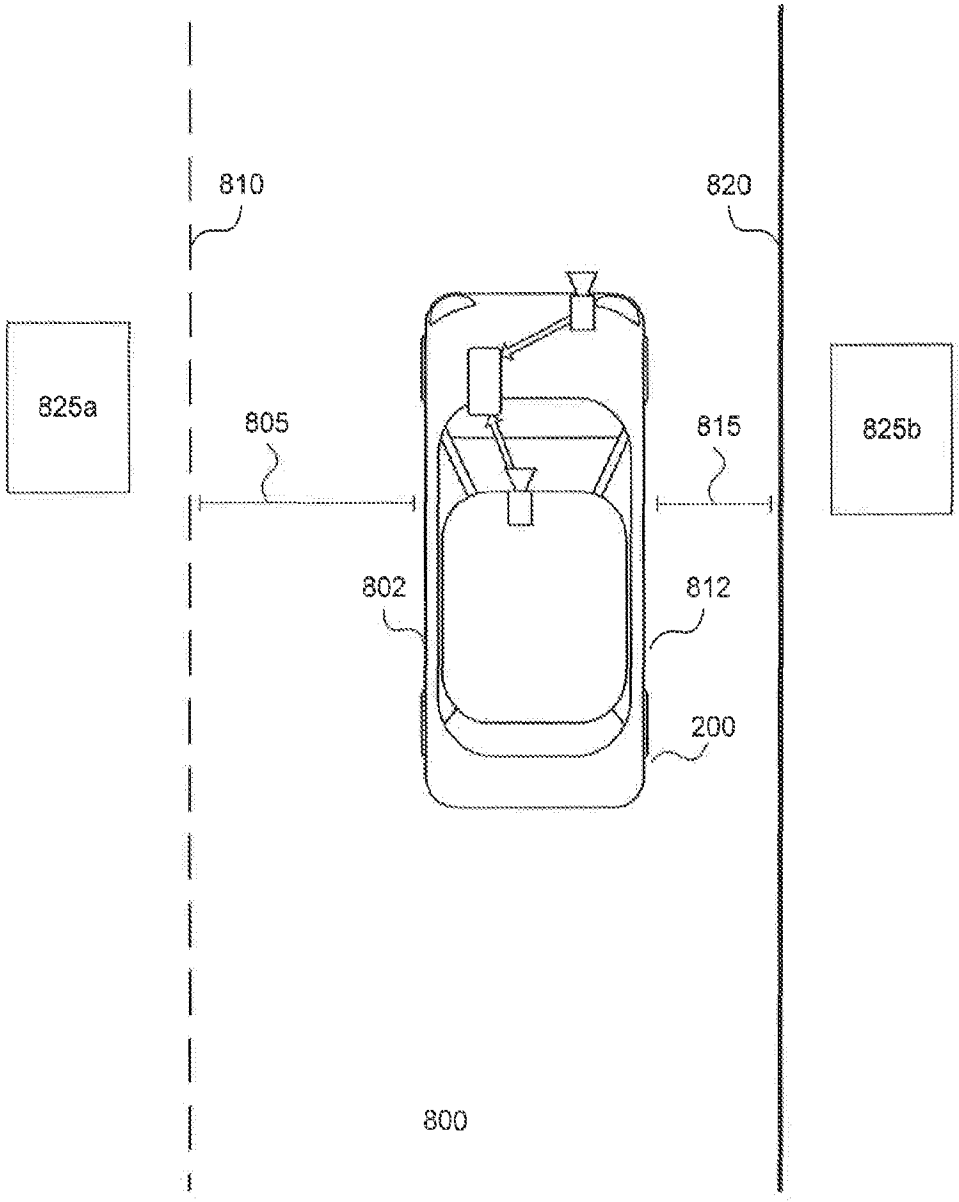

FIG. 8C

IPR2025-01034
Tesla EX1002 Page 1774

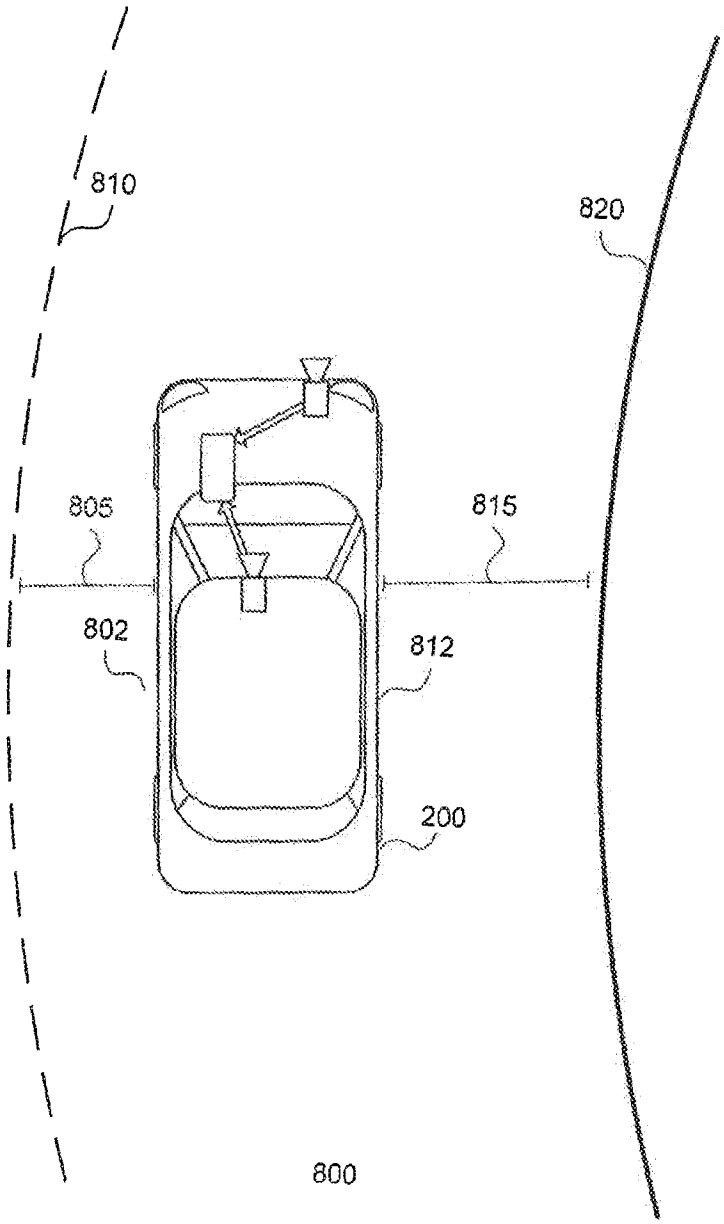

FIG. 8D

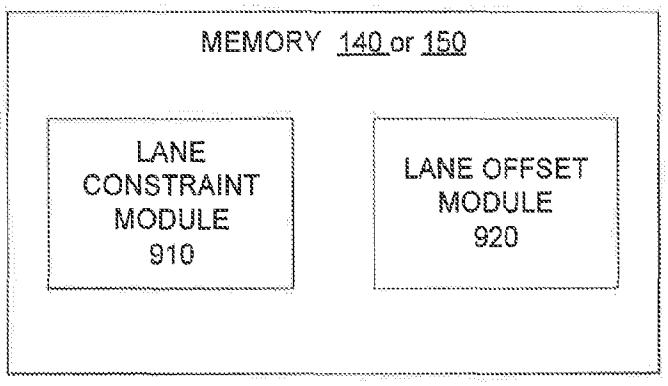

FIG. 9

IPR2025-01034
Tesla EX1002 Page 1776

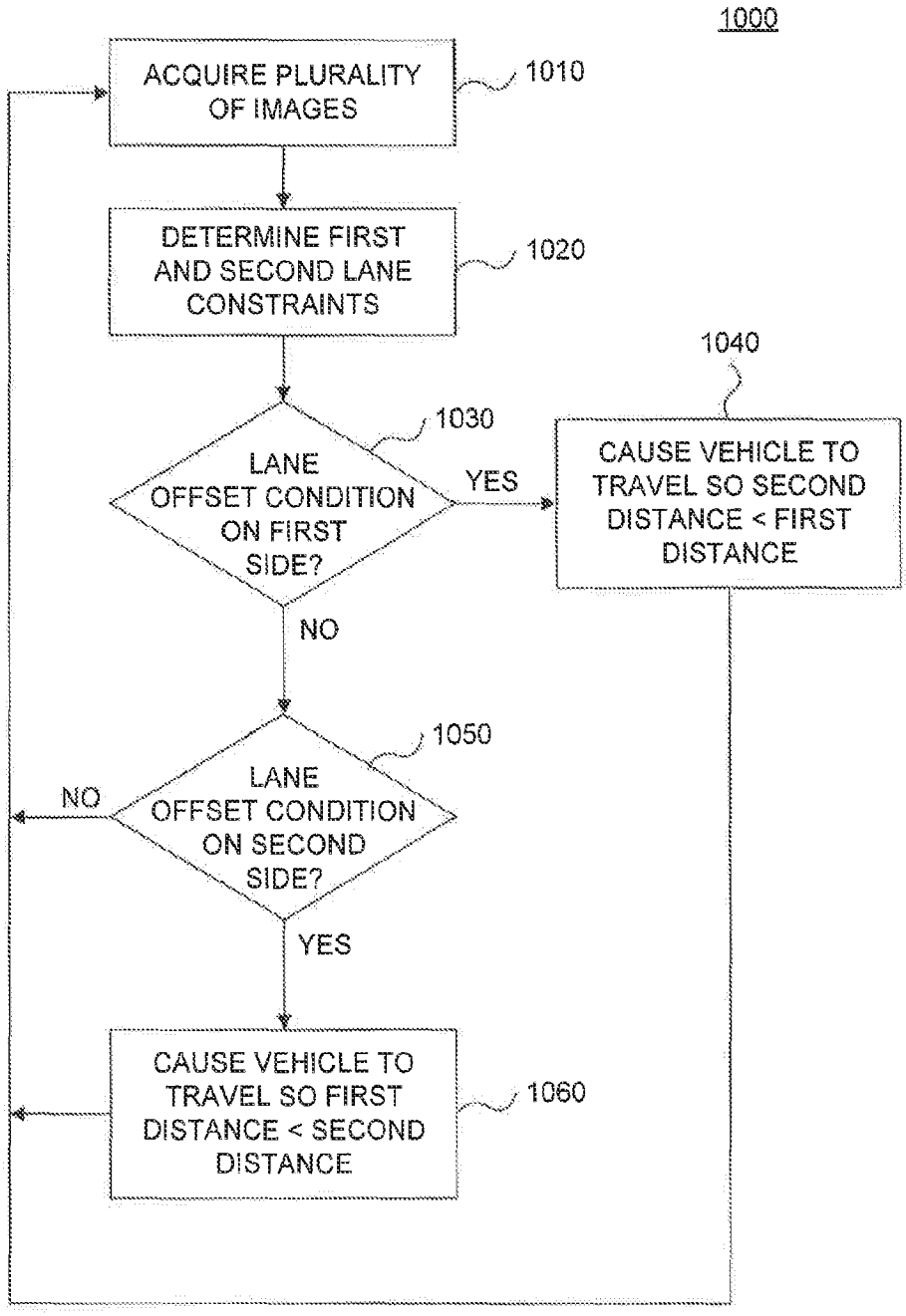

FIG. 10

IPR2025-01034
Tesla EX1002 Page 1777

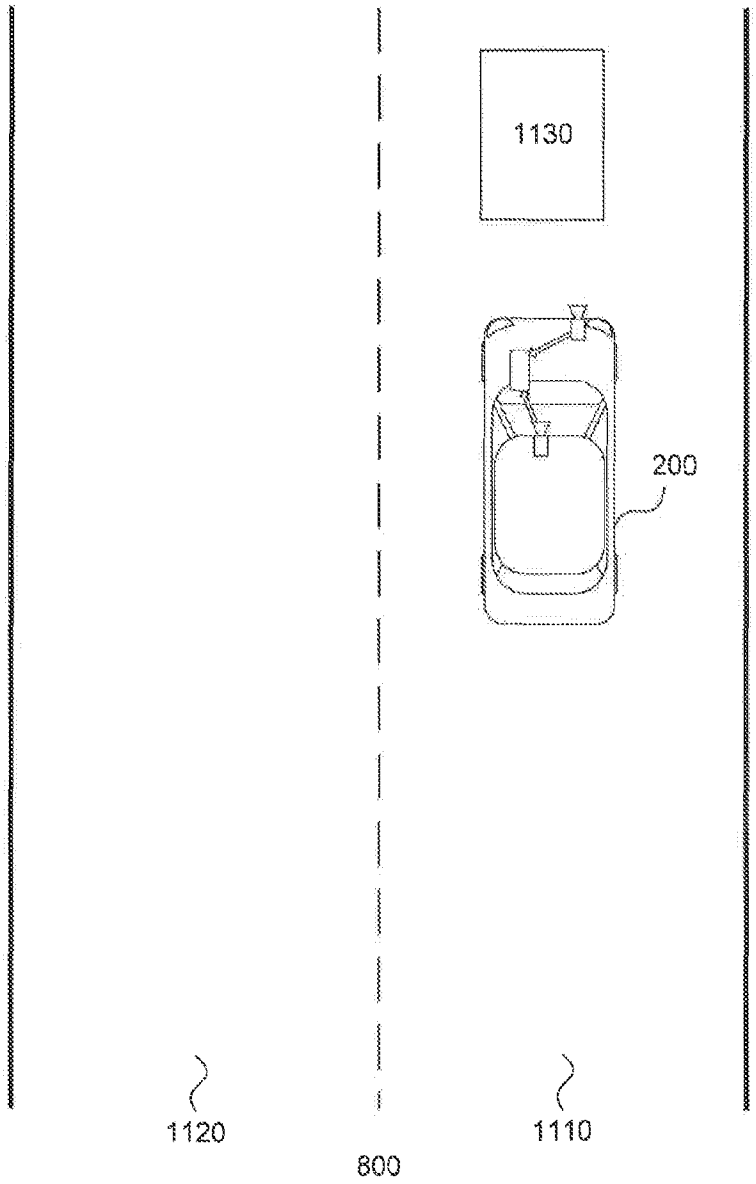

FIG. 11

IPR2025-01034
Tesla EX1002 Page 1778

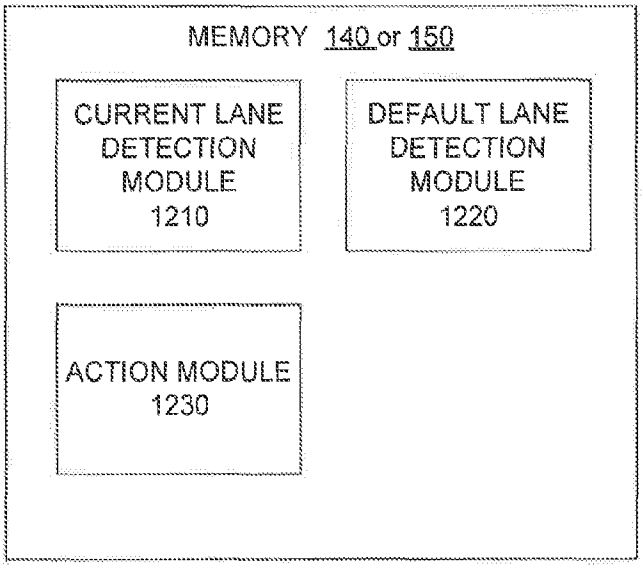

FIG. 12A

IPR2025-01034
Tesla EX1002 Page 1779

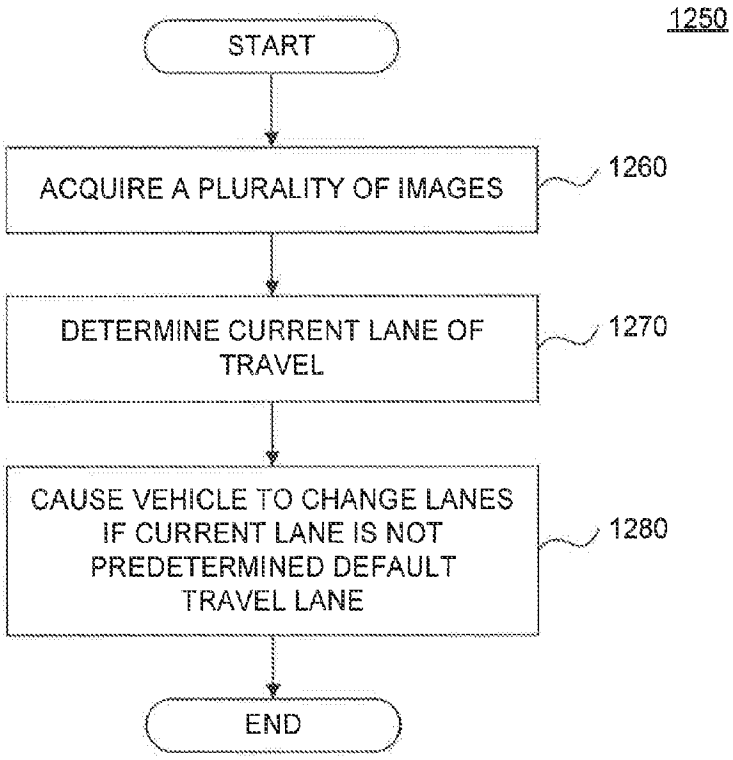
1250
START
ACQUIRE A PLURALITY OF IMAGES
1260
DETERMINE CURRENT LANE OF TRAVEL
1270
CAUSE VEHICLE TO CHANGE LANES IF CURRENT LANE IS NOT PREDETERMINED DEFAULT TRAVEL LANE
1280
END

FIG. 12B

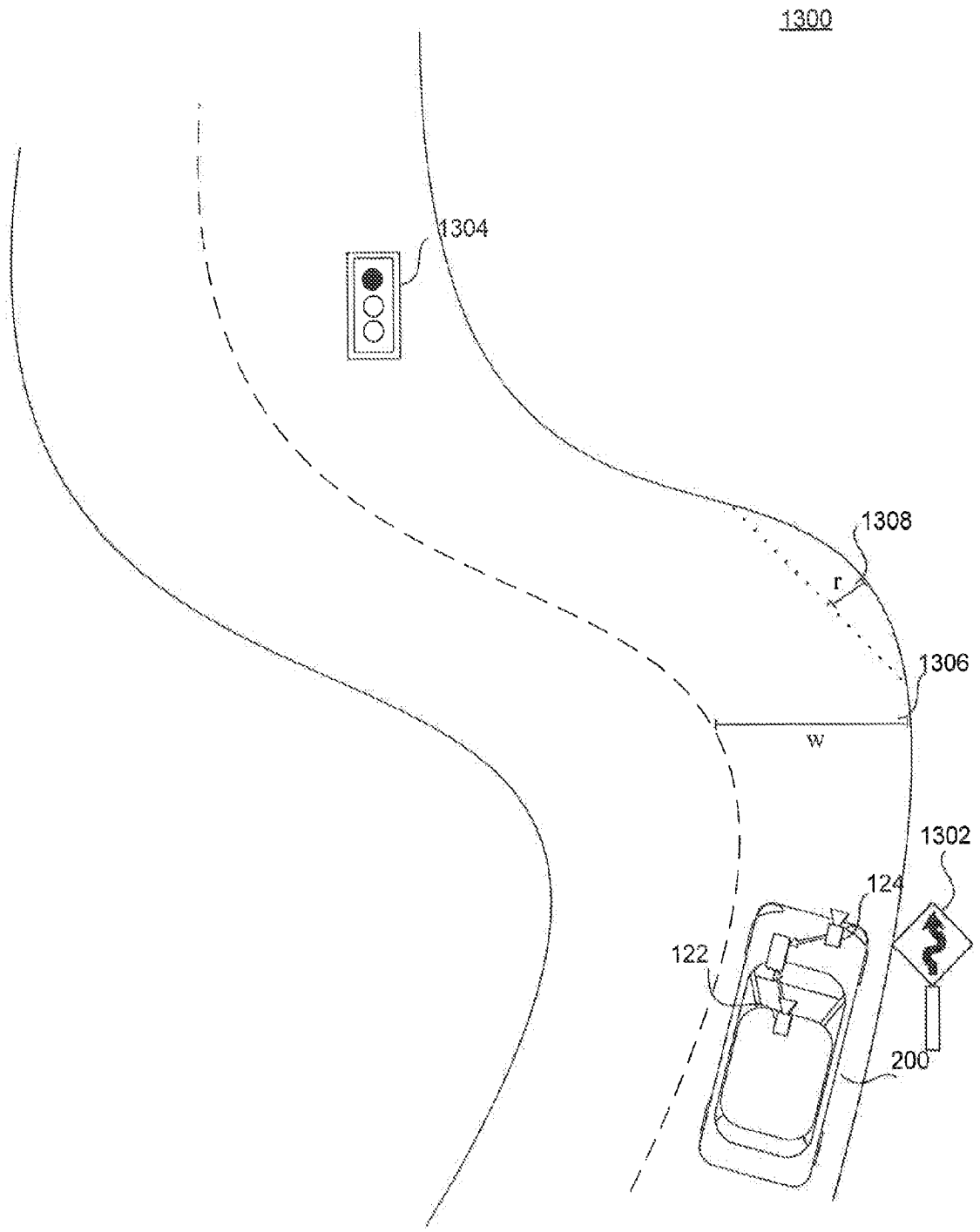

FIG. 13A

IPR2025-01034
Tesla EX1002 Page 1781

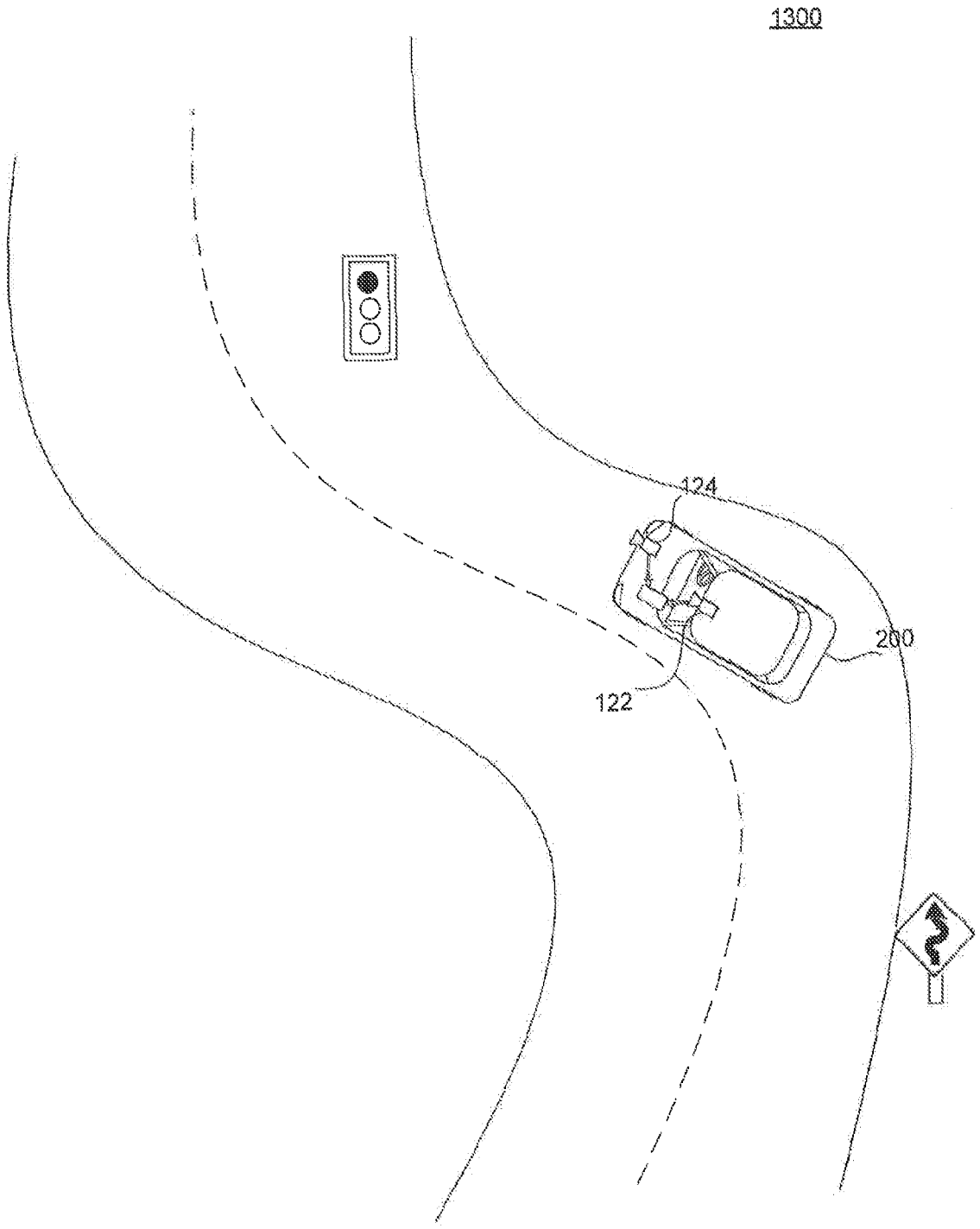

FIG. 13B

IPR2025-01034
Tesla EX1002 Page 1782

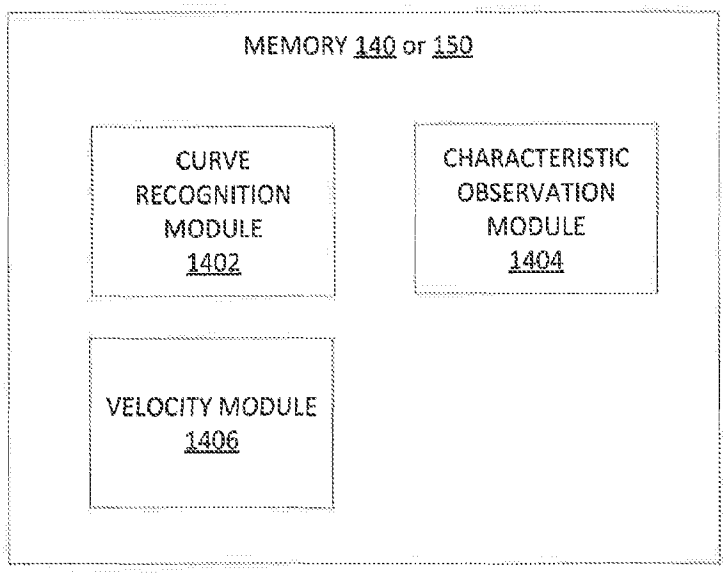
MEMORY 140 or 150
CURVE RECOGNITION MODULE 1402
CHARACTERISTIC OBSERVATION MODULE 1404
VELOCITY MODULE 1406

FIG. 14

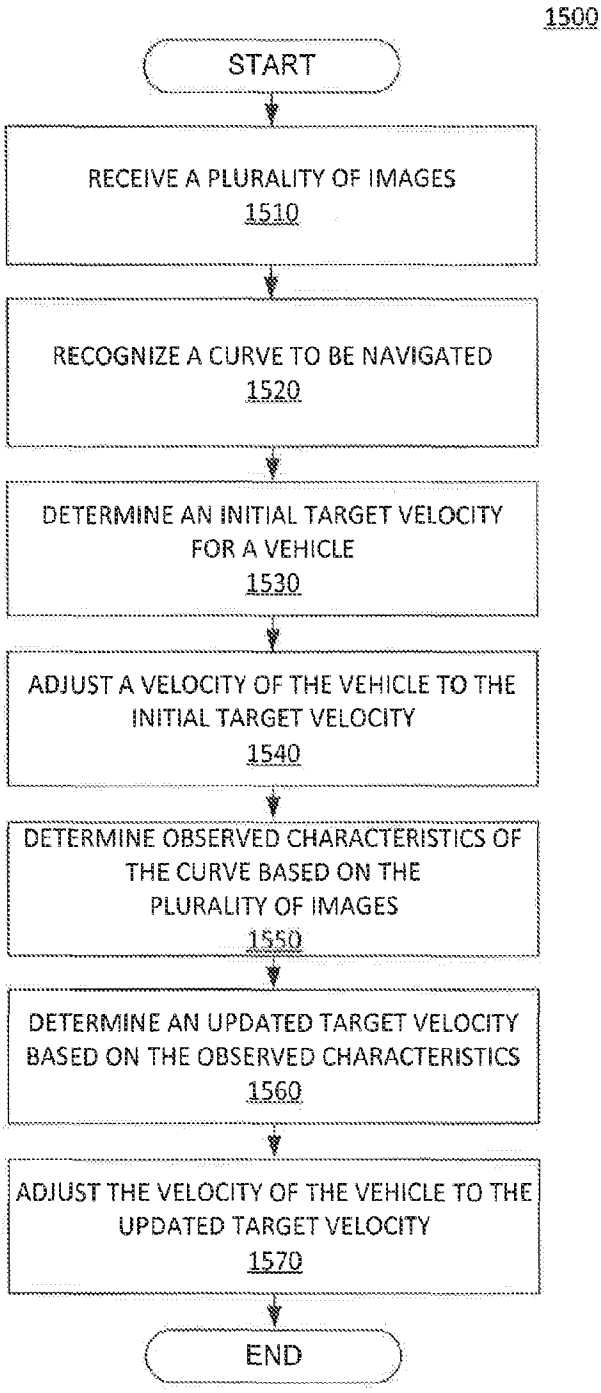
1500
START
RECEIVE A PLURALITY OF IMAGES
1510
RECOGNIZE A CURVE TO BE NAVIGATED
1520
DETERMINE AN INITIAL TARGET VELOCITY FOR A VEHICLE
1530
ADJUST A VELOCITY OF THE VEHICLE TO THE INITIAL TARGET VELOCITY
1540
DETERMINE OBSERVED CHARACTERISTICS OF THE CURVE BASED ON THE PLURALITY OF IMAGES
1550
DETERMINE AN UPDATED TARGET VELOCITY BASED ON THE OBSERVED CHARACTERISTICS
1560
ADJUST THE VELOCITY OF THE VEHICLE TO THE UPDATED TARGET VELOCITY
1570
END

FIG. 15

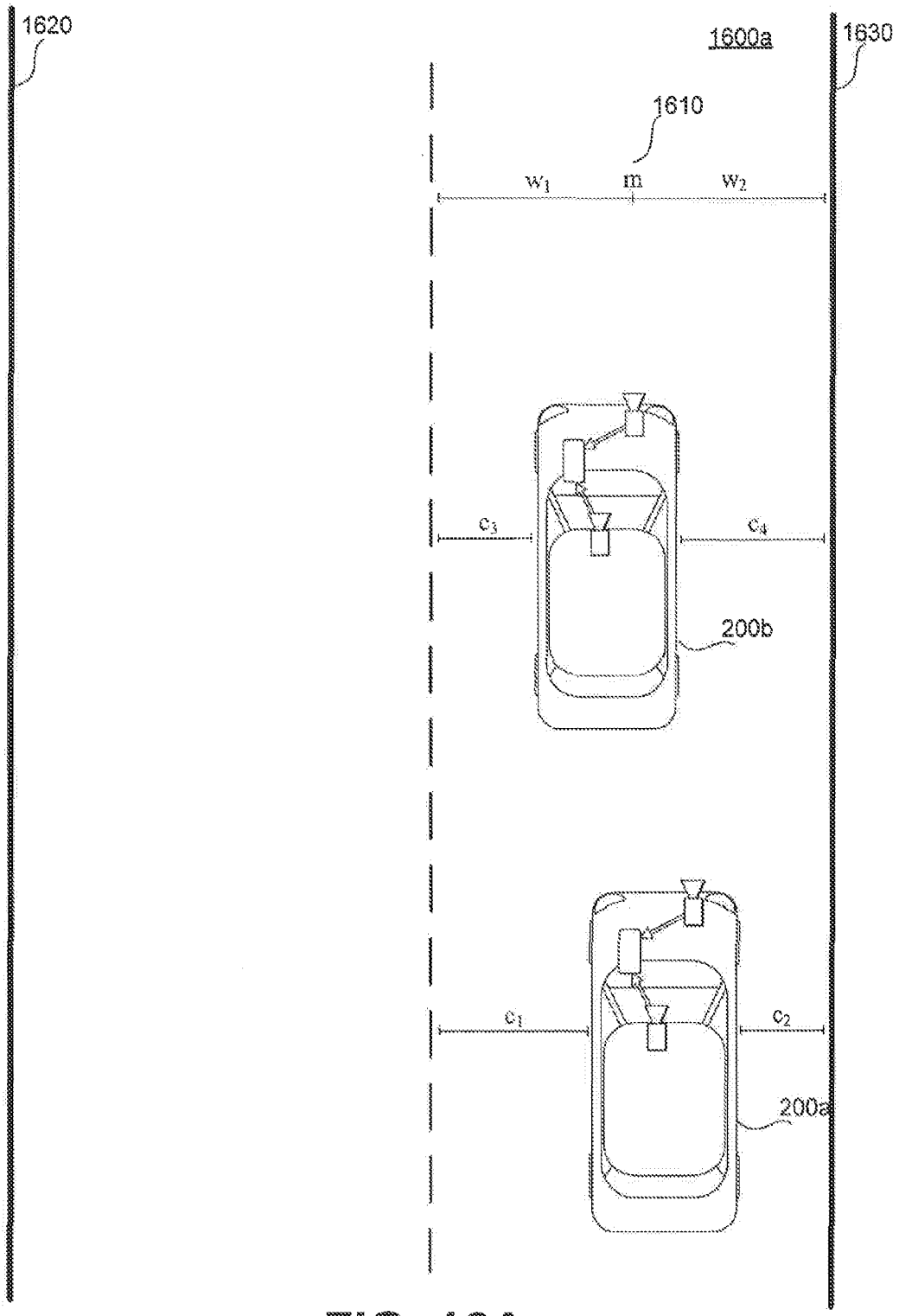

FIG. 16A

IPR2025-01034
Tesla EX1002 Page 1785

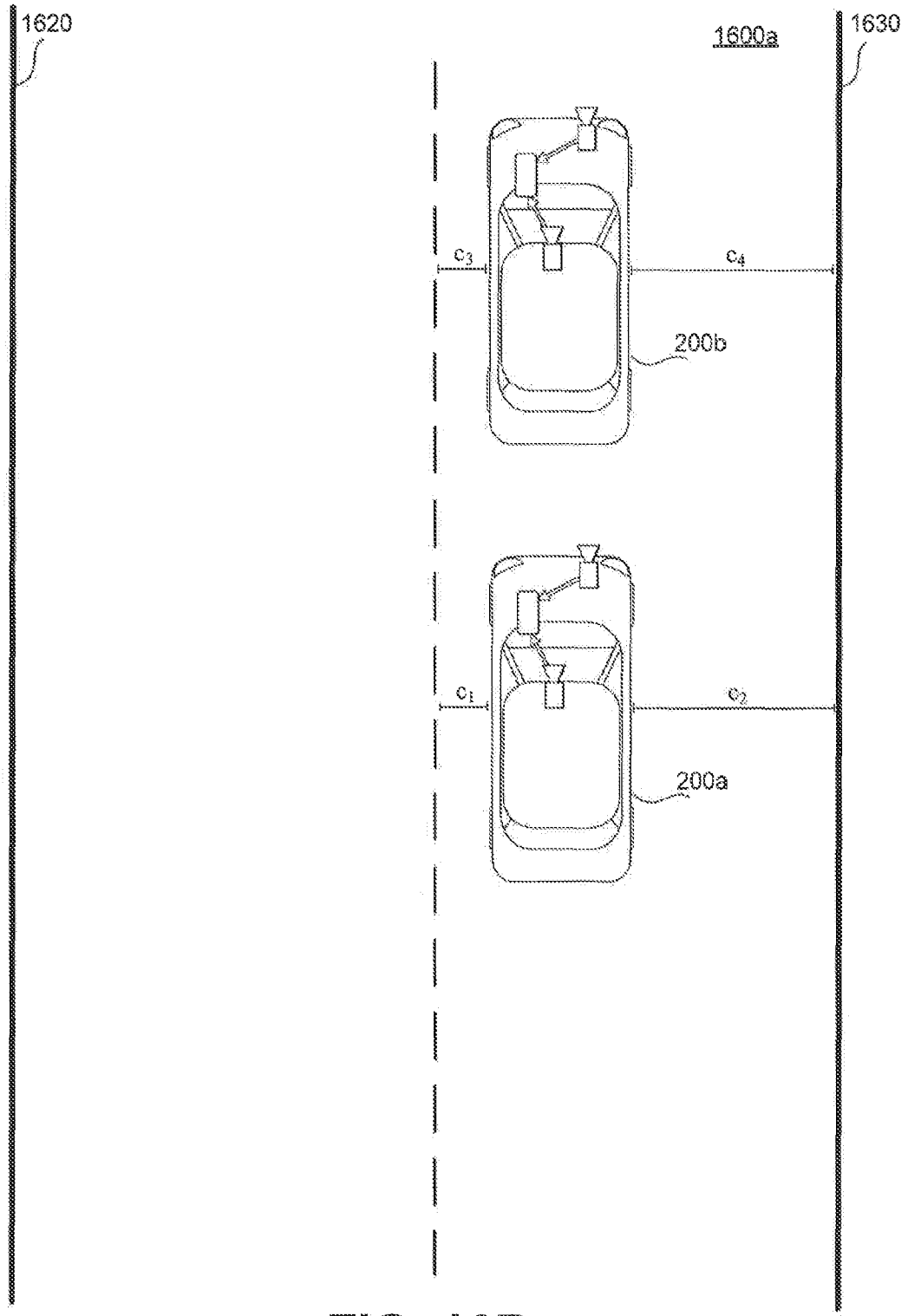

FIG. 16B

IPR2025-01034
Tesla EX1002 Page 1786

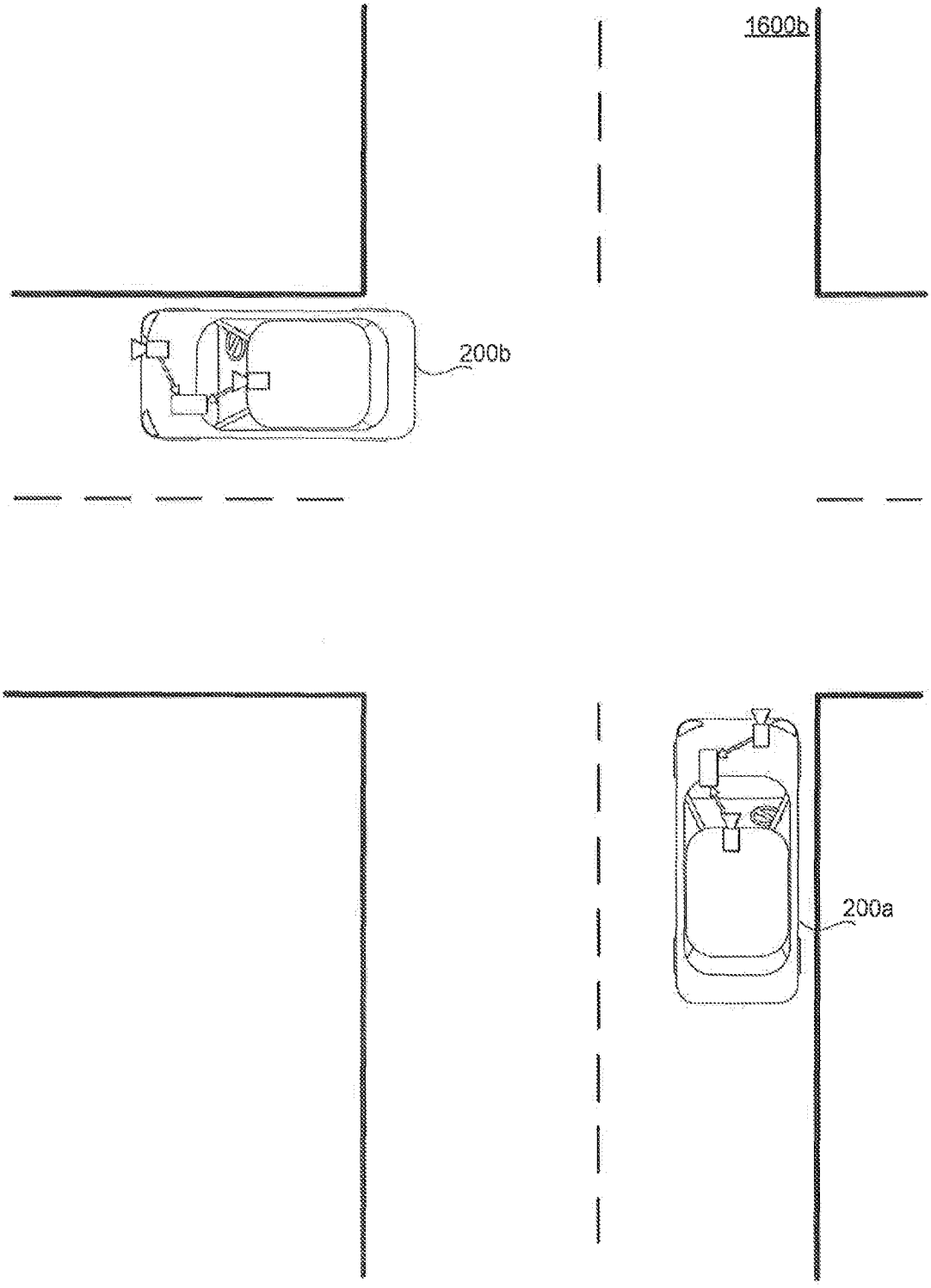

FIG. 16C

IPR2025-01034
Tesla EX1002 Page 1787

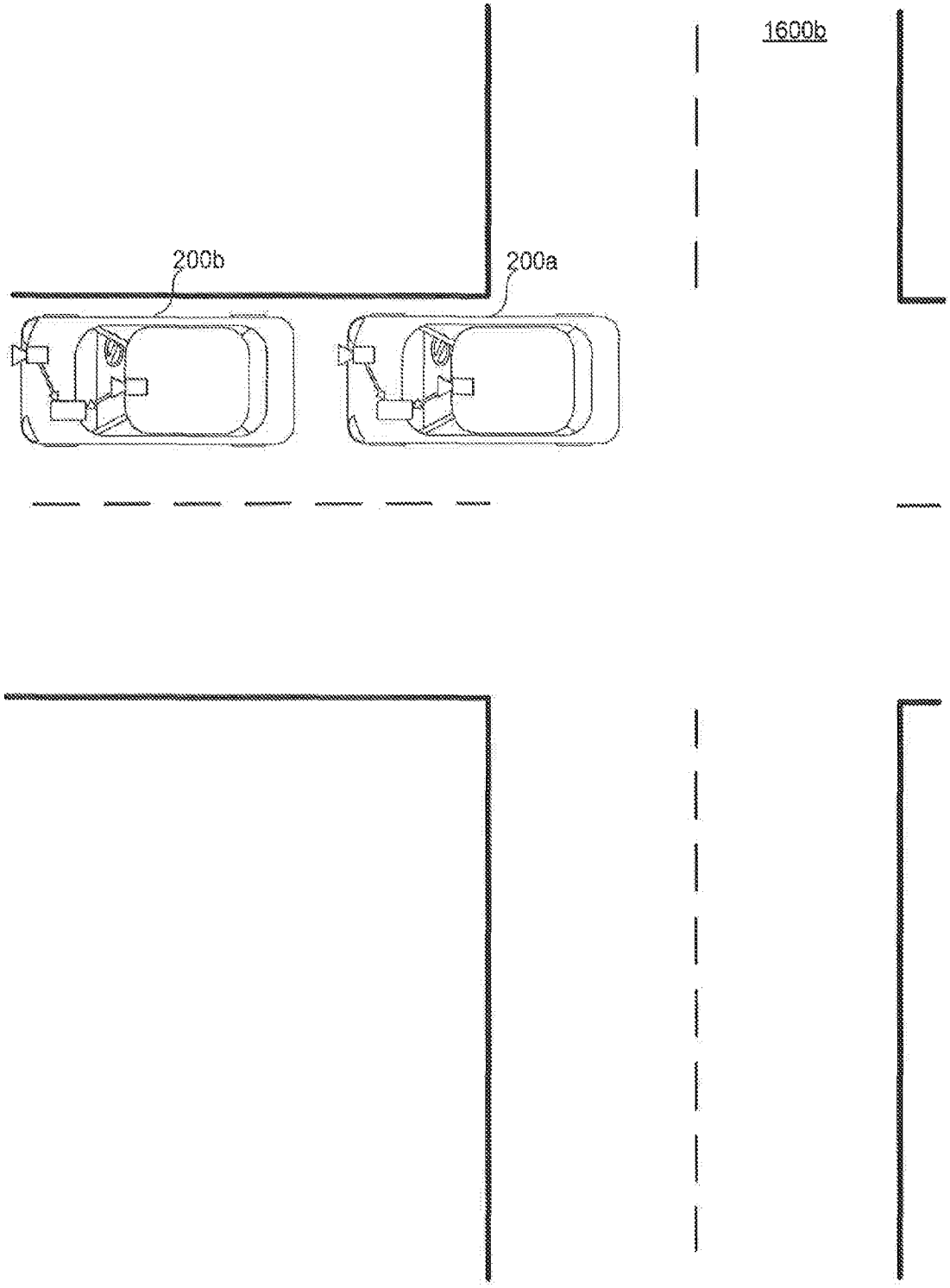

FIG. 16D

IPR2025-01034
Tesla EX1002 Page 1788

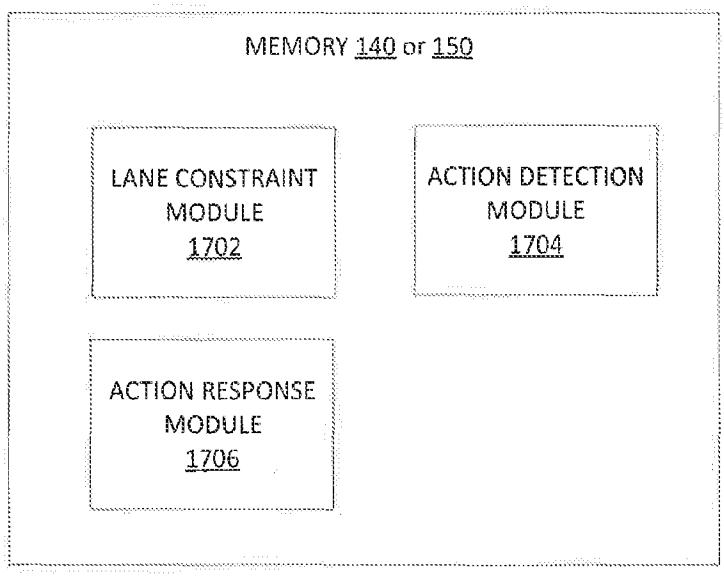
MEMORY 140 or 150
LANE CONSTRAINT MODULE 1702
ACTION DETECTION MODULE 1704
ACTION RESPONSE MODULE 1706

FIG. 17

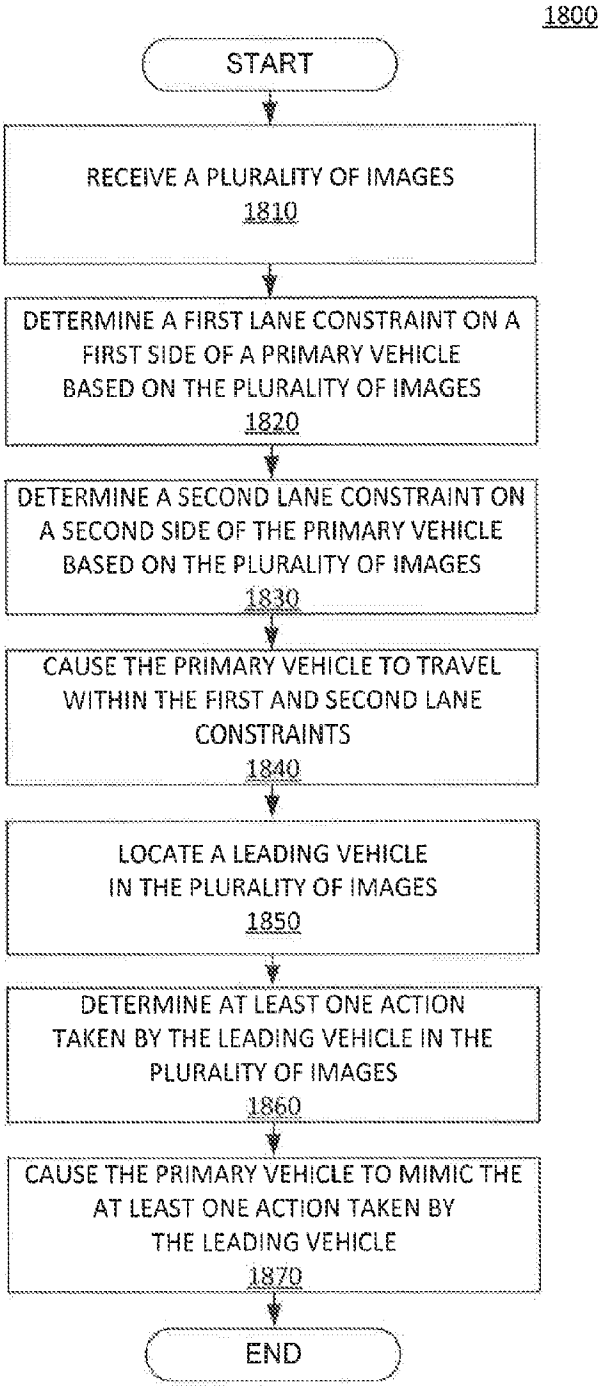
1800
START
RECEIVE A PLURALITY OF IMAGES
1810
DETERMINE A FIRST LANE CONSTRAINT ON A FIRST SIDE OF A PRIMARY VEHICLE BASED ON THE PLURALITY OF IMAGES
1820
DETERMINE A SECOND LANE CONSTRAINT ON A SECOND SIDE OF THE PRIMARY VEHICLE BASED ON THE PLURALITY OF IMAGES
1830
CAUSE THE PRIMARY VEHICLE TO TRAVEL WITHIN THE FIRST AND SECOND LANE CONSTRAINTS
1840
LOCATE A LEADING VEHICLE IN THE PLURALITY OF IMAGES
1850
DETERMINE AT LEAST ONE ACTION TAKEN BY THE LEADING VEHICLE IN THE PLURALITY OF IMAGES
1860
CAUSE THE PRIMARY VEHICLE TO MIMIC THE AT LEAST ONE ACTION TAKEN BY THE LEADING VEHICLE
1870
END

FIG. 18

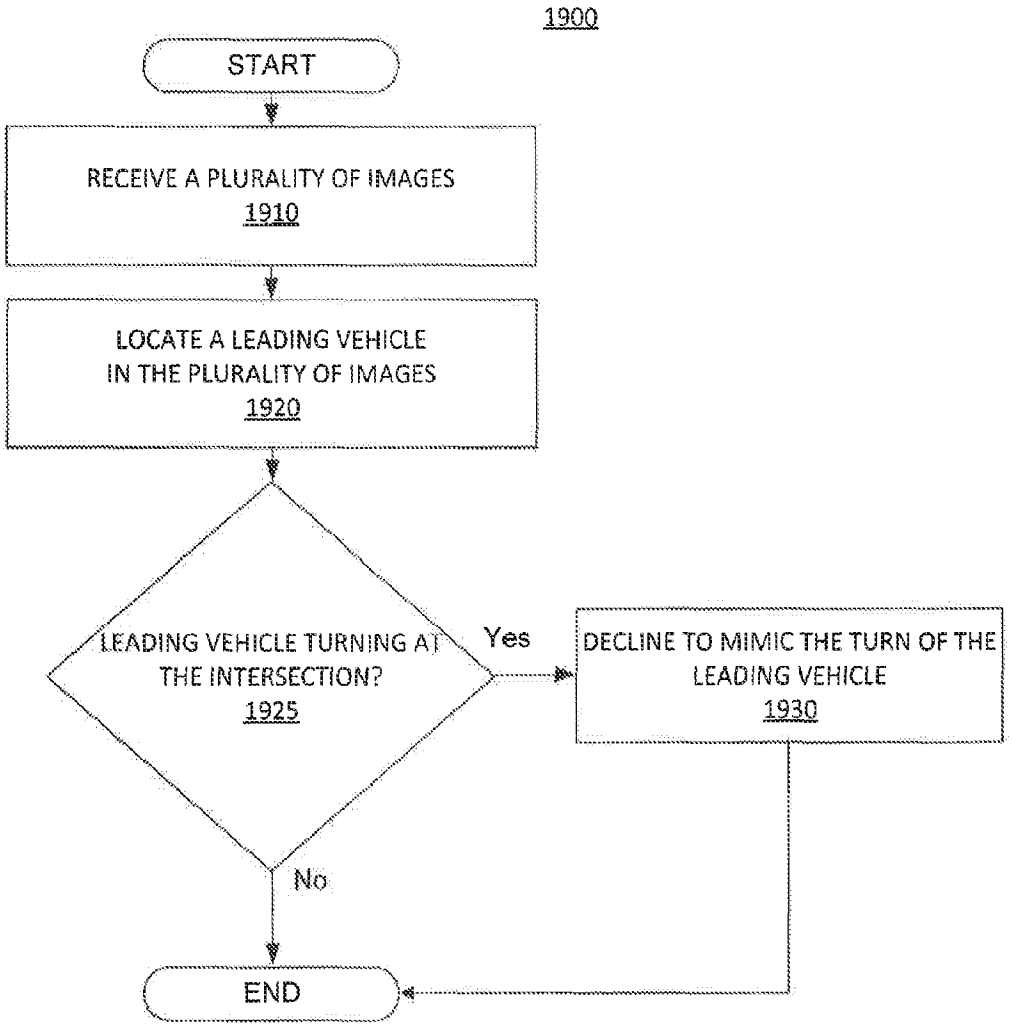
1900
START
RECEIVE A PLURALITY OF IMAGES
1910
LOCATE A LEADING VEHICLE
IN THE PLURALITY OF IMAGES
1920
LEADING VEHICLE TURNING AT
THE INTERSECTION?
1925
Yes
DECLINE TO MIMIC THE TURN OF THE
LEADING VEHICLE
1930
No
END

FIG. 19

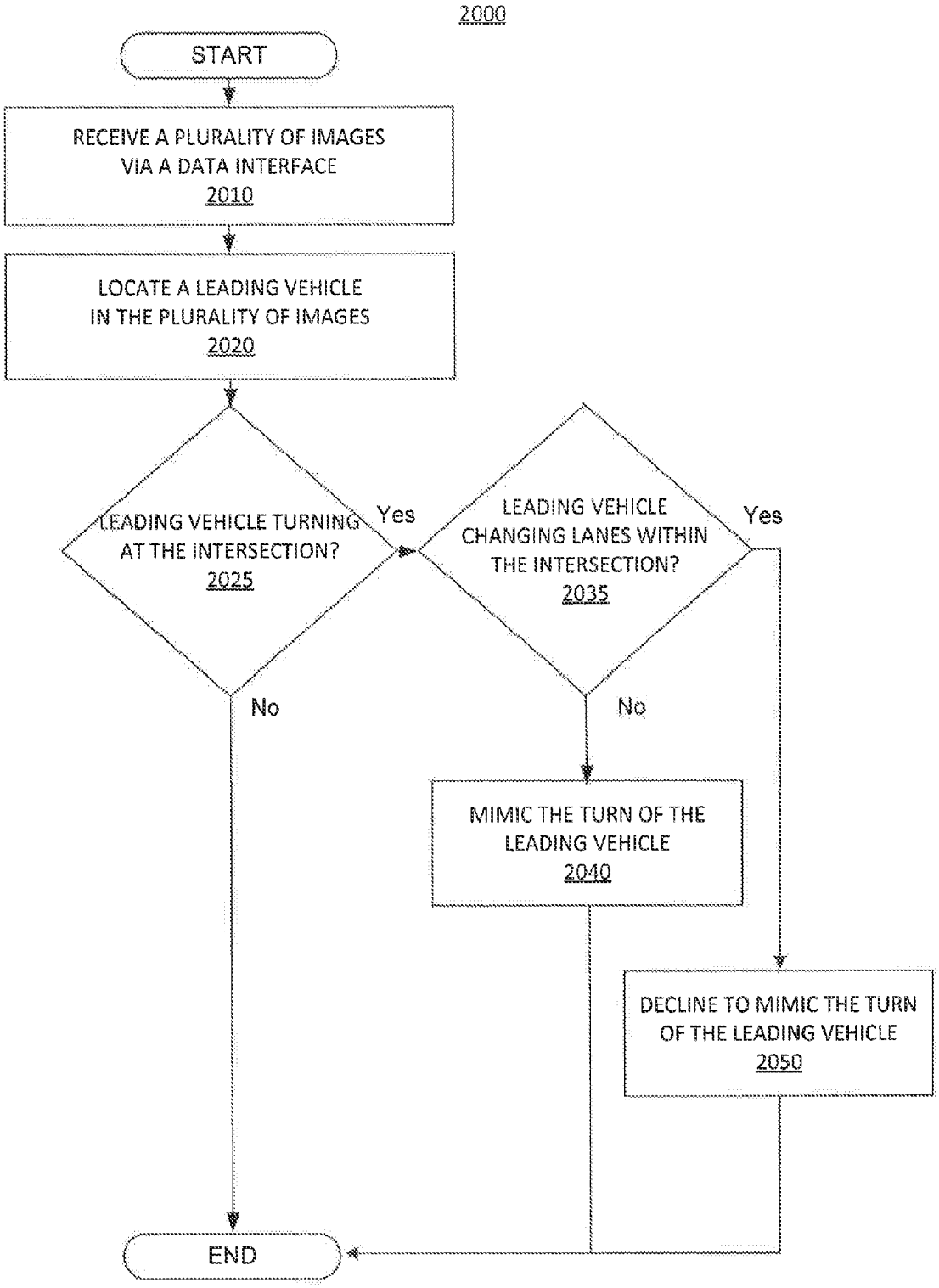

FIG. 20

IPR2025-01034
Tesla EX1002 Page 1792

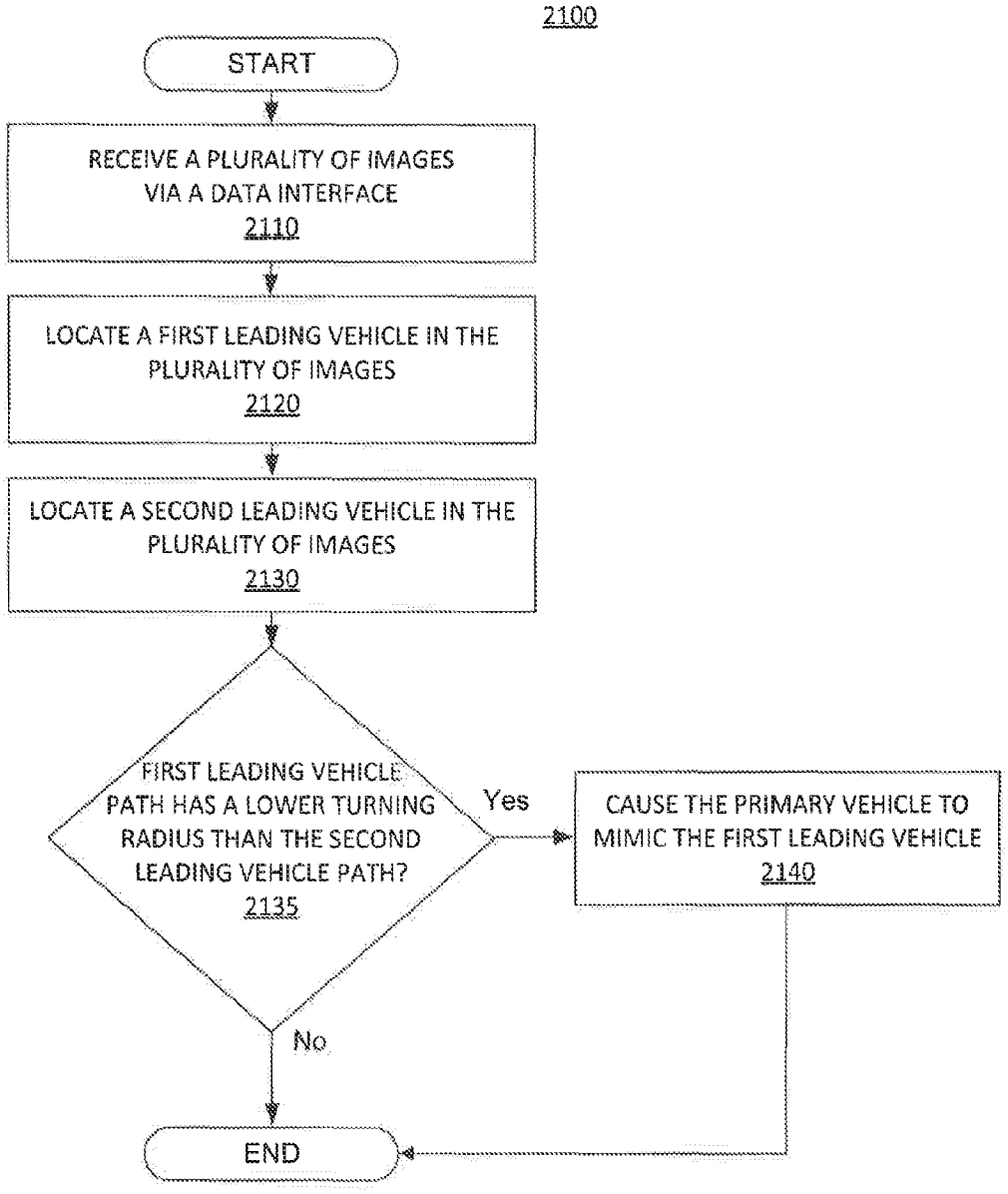
2100
START
RECEIVE A PLURALITY OF IMAGES VIA A DATA INTERFACE
2110
LOCATE A FIRST LEADING VEHICLE IN THE PLURALITY OF IMAGES
2120
LOCATE A SECOND LEADING VEHICLE IN THE PLURALITY OF IMAGES
2130
FIRST LEADING VEHICLE PATH HAS A LOWER TURNING RADIUS THAN THE SECOND LEADING VEHICLE PATH?
2135
Yes
CAUSE THE PRIMARY VEHICLE TO MIMIC THE FIRST LEADING VEHICLE
2140
No
END

FIG. 21

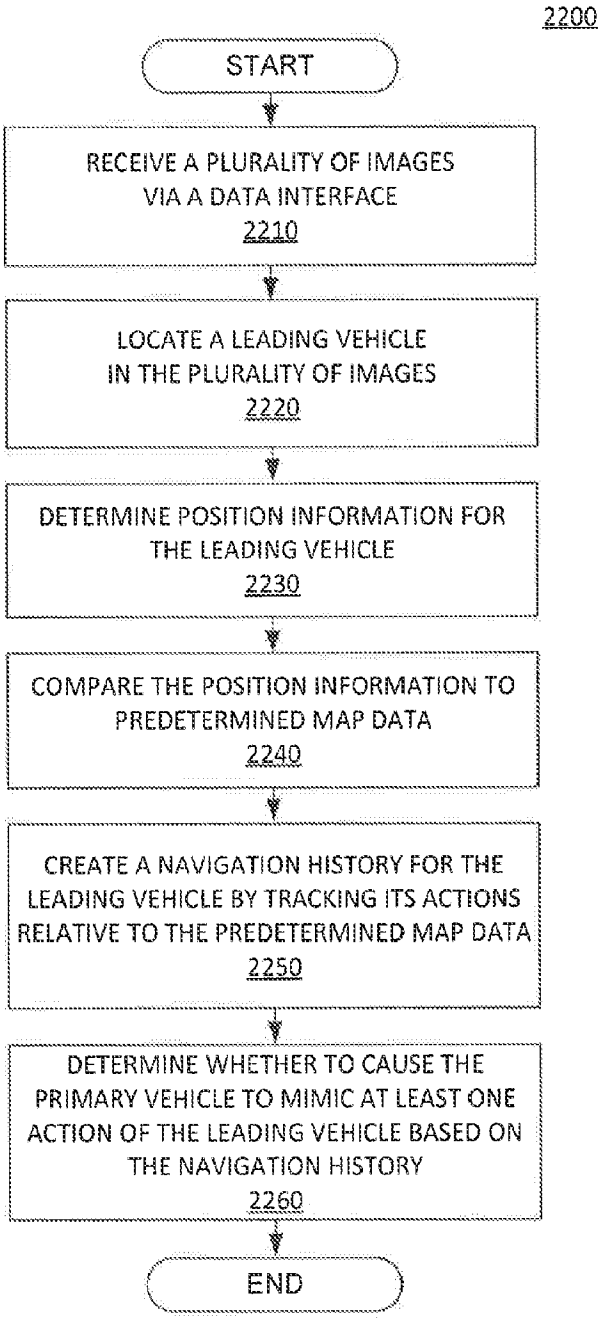
2200
START
RECEIVE A PLURALITY OF IMAGES VIA A DATA INTERFACE
2210
LOCATE A LEADING VEHICLE IN THE PLURALITY OF IMAGES
2220
DETERMINE POSITION INFORMATION FOR THE LEADING VEHICLE
2230
COMPARE THE POSITION INFORMATION TO PREDETERMINED MAP DATA
2240
CREATE A NAVIGATION HISTORY FOR THE LEADING VEHICLE BY TRACKING ITS ACTIONS RELATIVE TO THE PREDETERMINED MAP DATA
2250
DETERMINE WHETHER TO CAUSE THE PRIMARY VEHICLE TO MIMIC AT LEAST ONE ACTION OF THE LEADING VEHICLE BASED ON THE NAVIGATION HISTORY
2260
END

FIG. 22

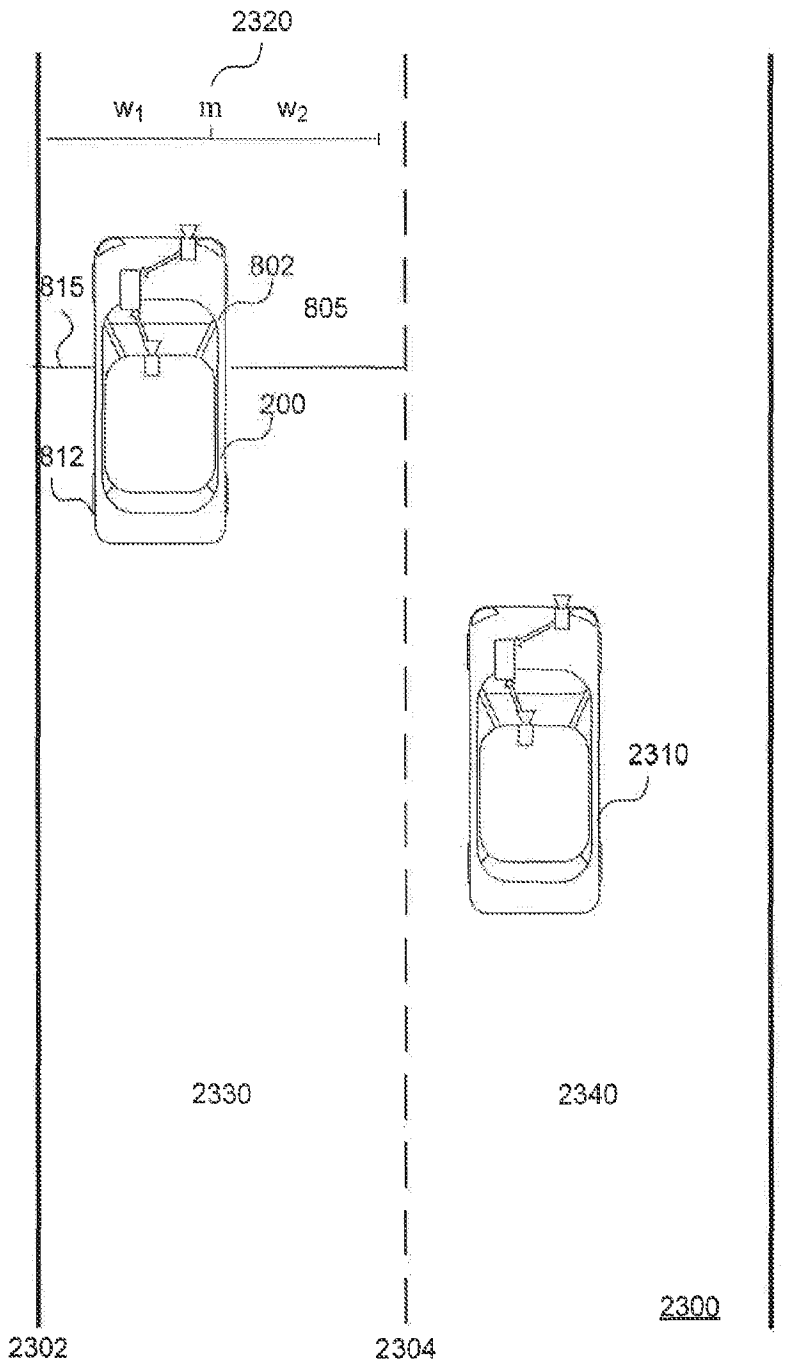

FIG. 23

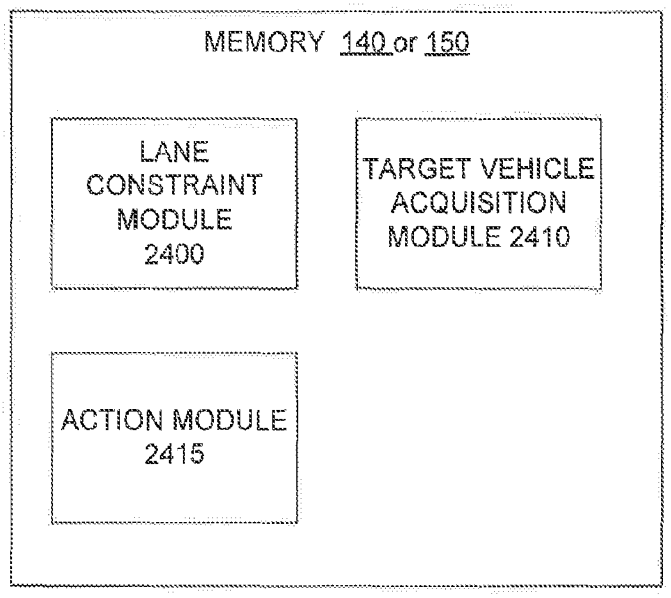
MEMORY 140 or 150
LANE CONSTRAINT MODULE 2400
TARGET VEHICLE ACQUISITION MODULE 2410
ACTION MODULE 2415

FIG. 24A

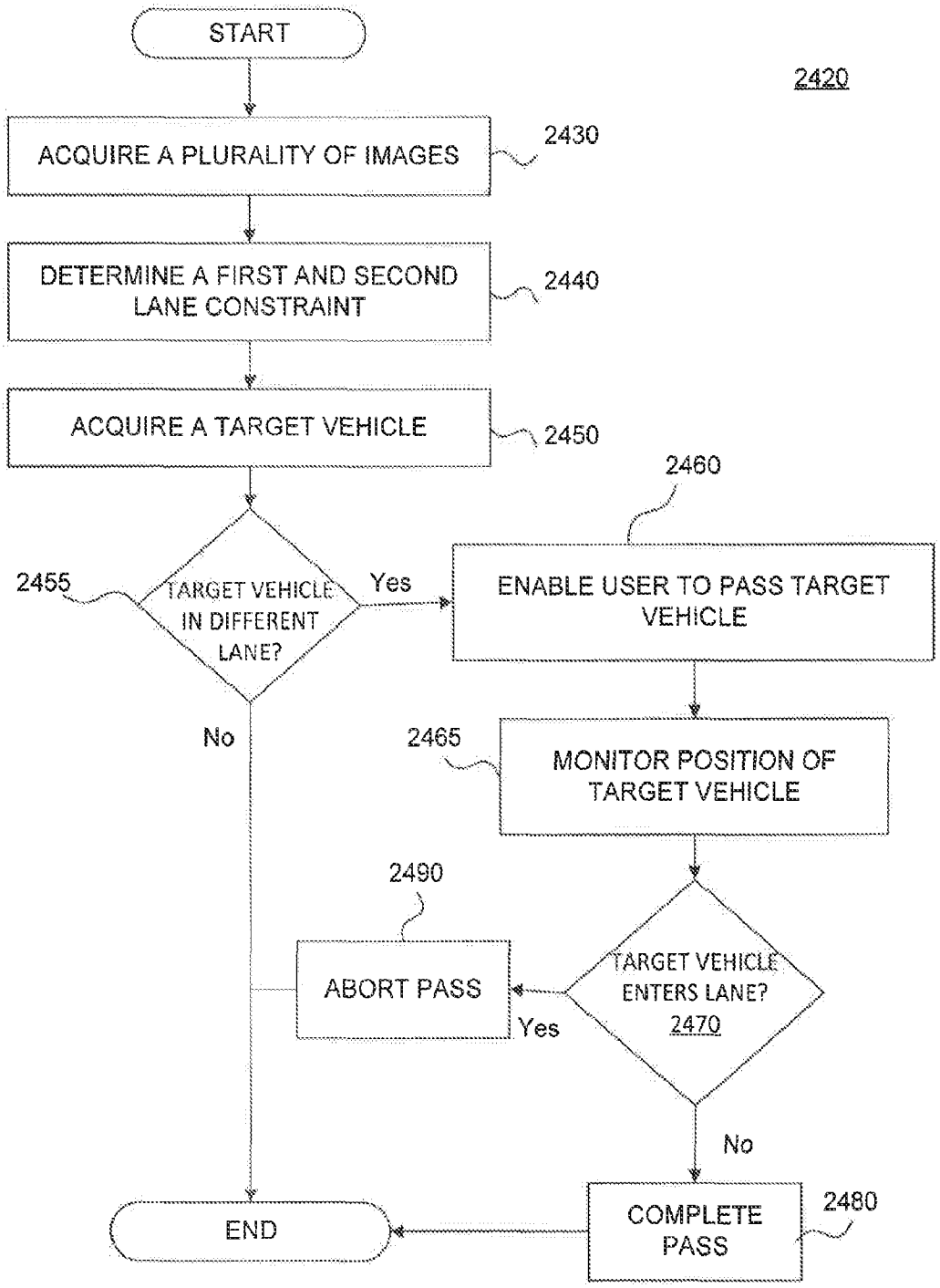

FIG. 24B

IPR2025-01034
Tesla EX1002 Page 1797

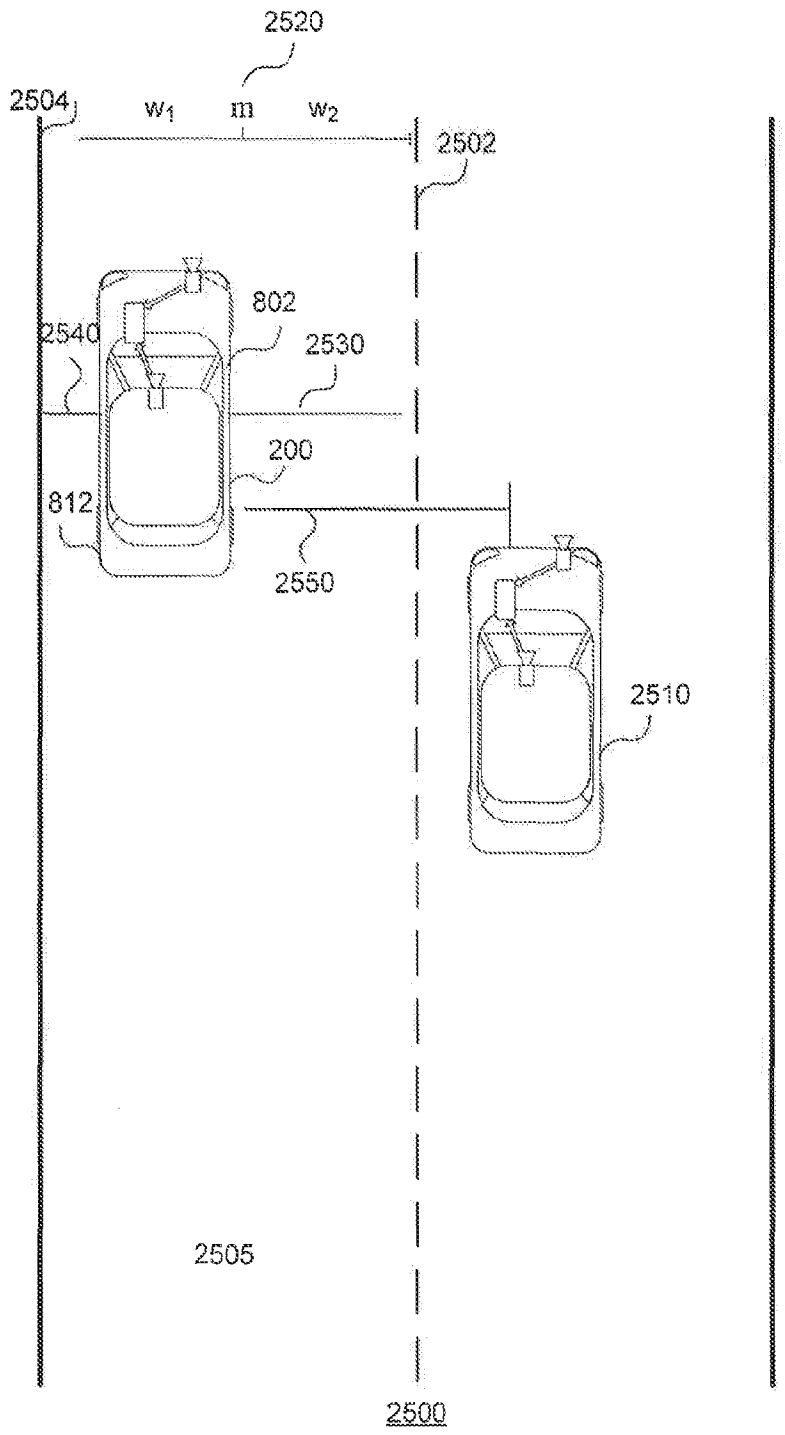
2520
2504
w_1
m
w_2
2502
802
2540
2530
200
812
2550
2510
2505
2500

FIG. 25

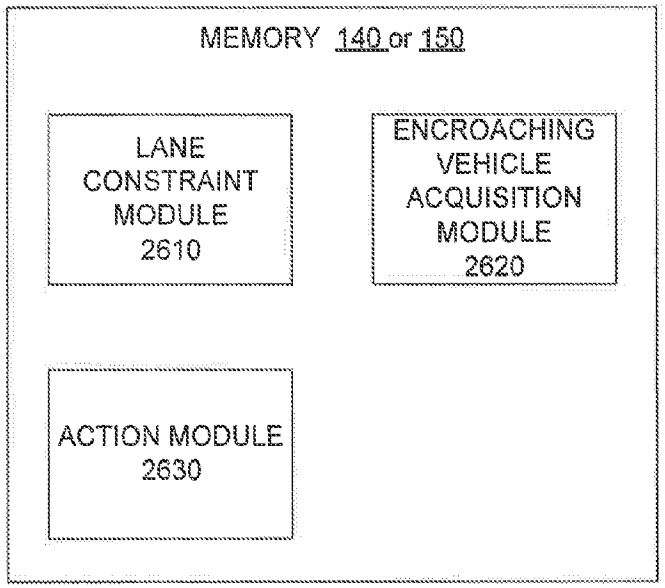
MEMORY 140 or 150
LANE CONSTRAINT MODULE 2610
ENCROACHING VEHICLE ACQUISITION MODULE 2620
ACTION MODULE 2630

FIG. 26

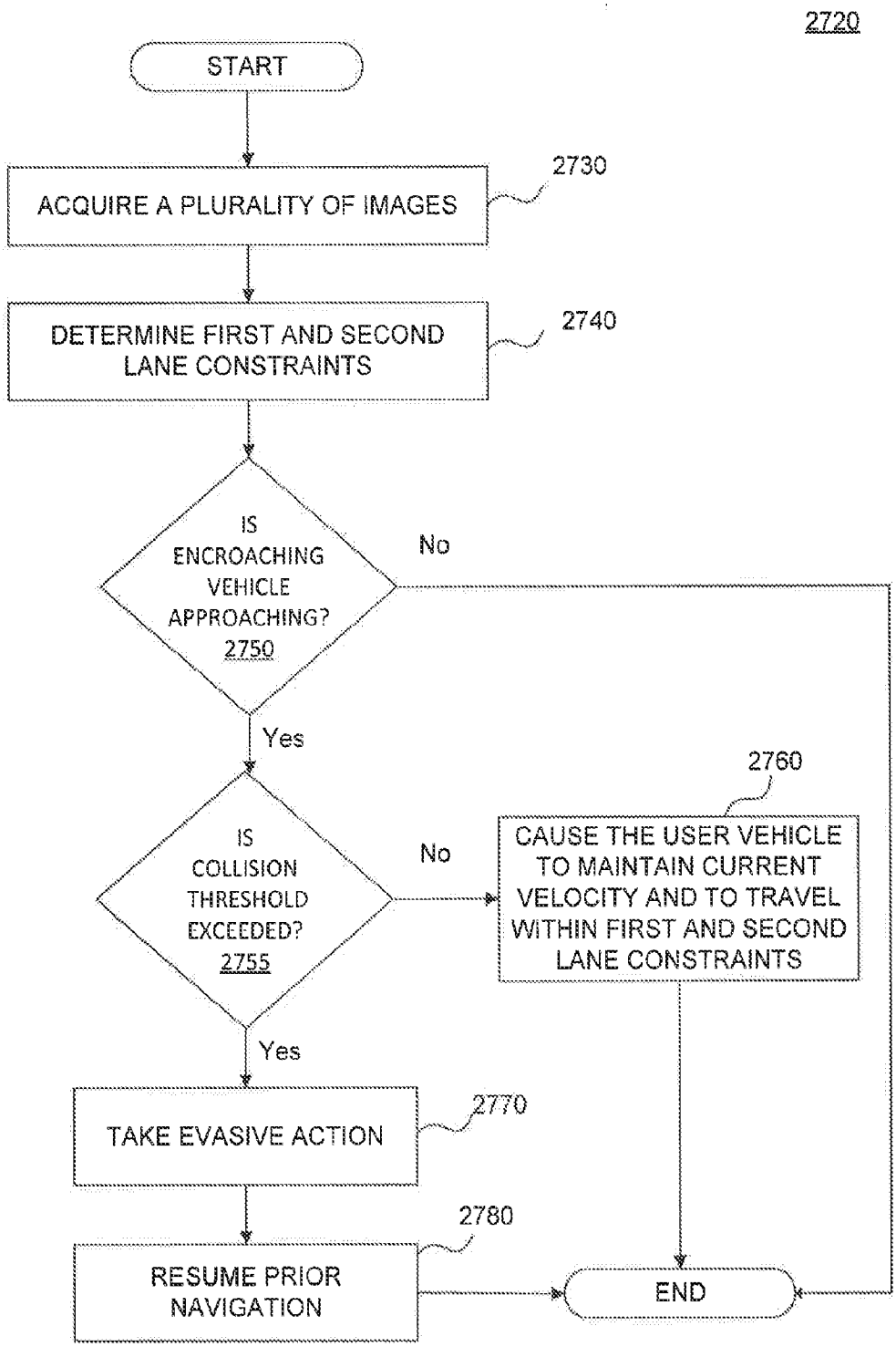

FIG. 27

IPR2025-01034
Tesla EX1002 Page 1800

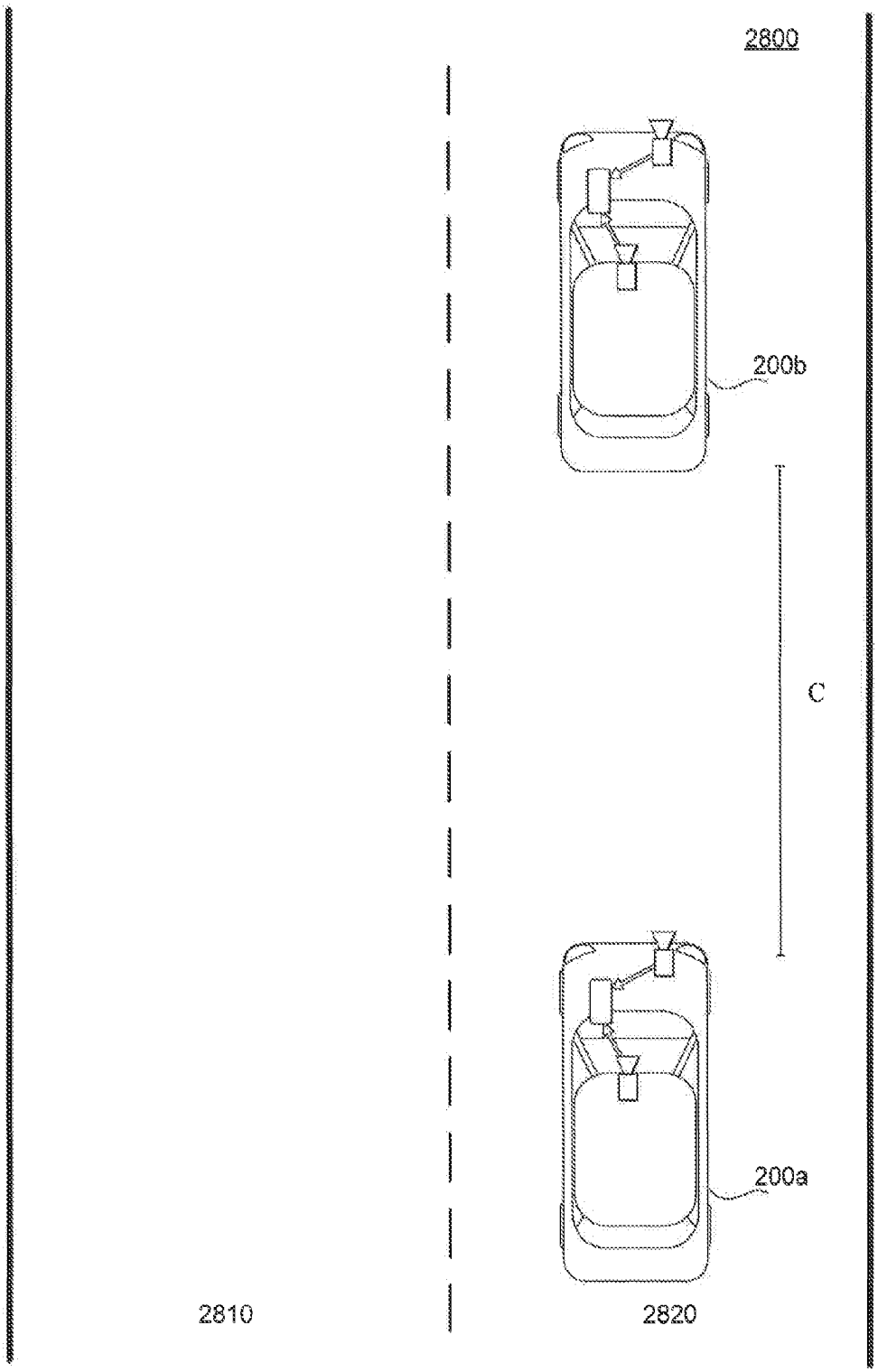

FIG. 28A

IPR2025-01034
Tesla EX1002 Page 1801

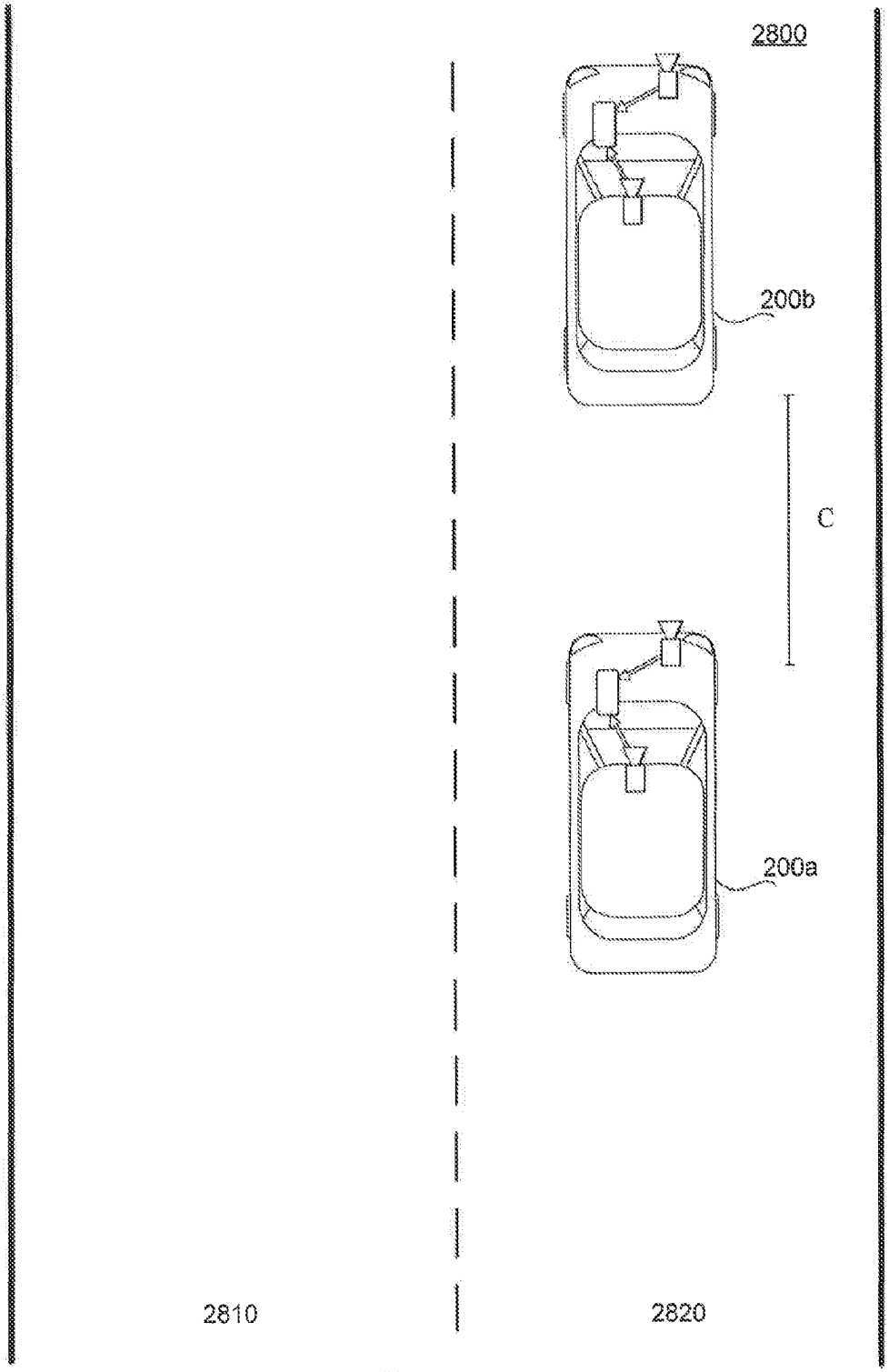

FIG. 28B

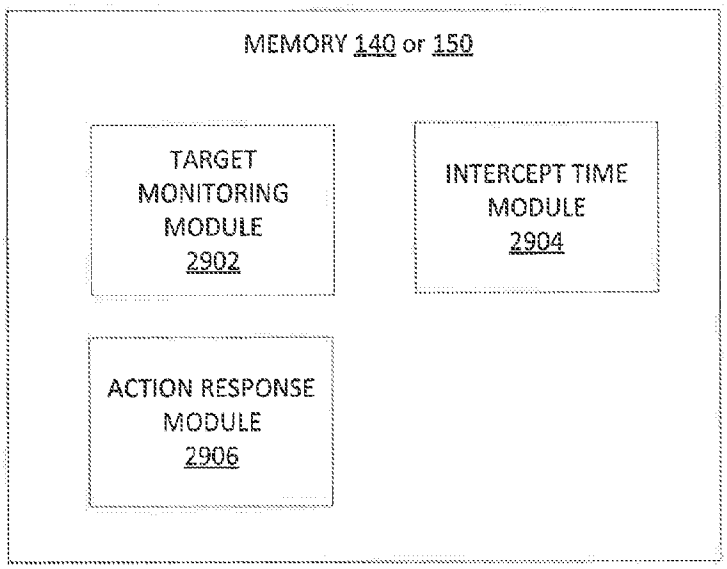
MEMORY 140 or 150
TARGET MONITORING MODULE 2902
INTERCEPT TIME MODULE 2904
ACTION RESPONSE MODULE 2906

FIG. 29

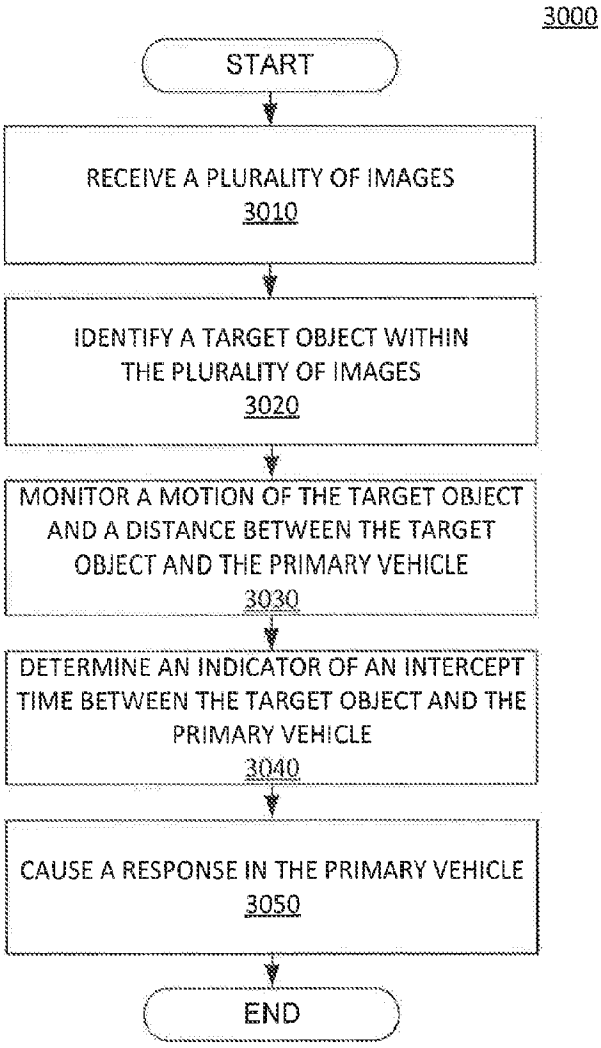
3000
START
RECEIVE A PLURALITY OF IMAGES
3010
IDENTIFY A TARGET OBJECT WITHIN THE PLURALITY OF IMAGES
3020
MONITOR A MOTION OF THE TARGET OBJECT AND A DISTANCE BETWEEN THE TARGET OBJECT AND THE PRIMARY VEHICLE
3030
DETERMINE AN INDICATOR OF AN INTERCEPT TIME BETWEEN THE TARGET OBJECT AND THE PRIMARY VEHICLE
3040
CAUSE A RESPONSE IN THE PRIMARY VEHICLE
3050
END

FIG. 30

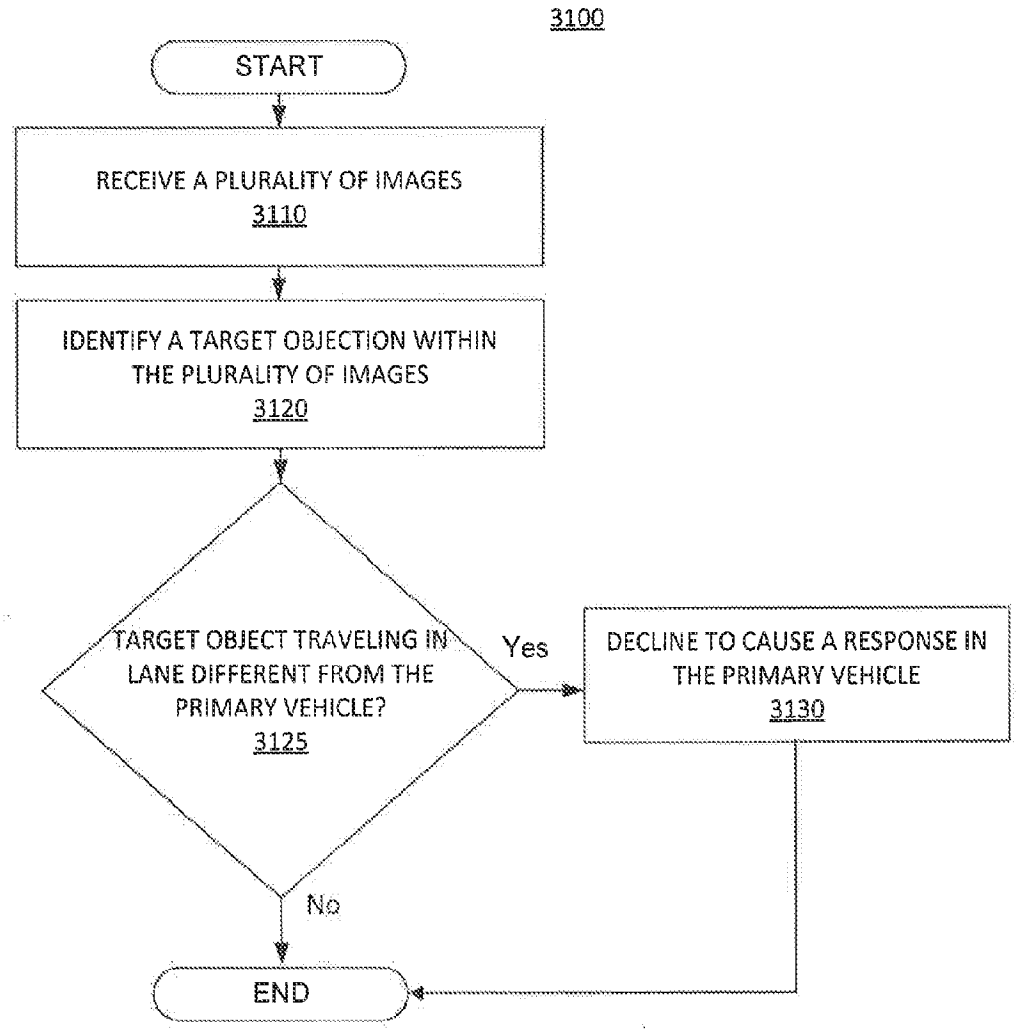

FIG. 31

IPR2025-01034
Tesla EX1002 Page 1805

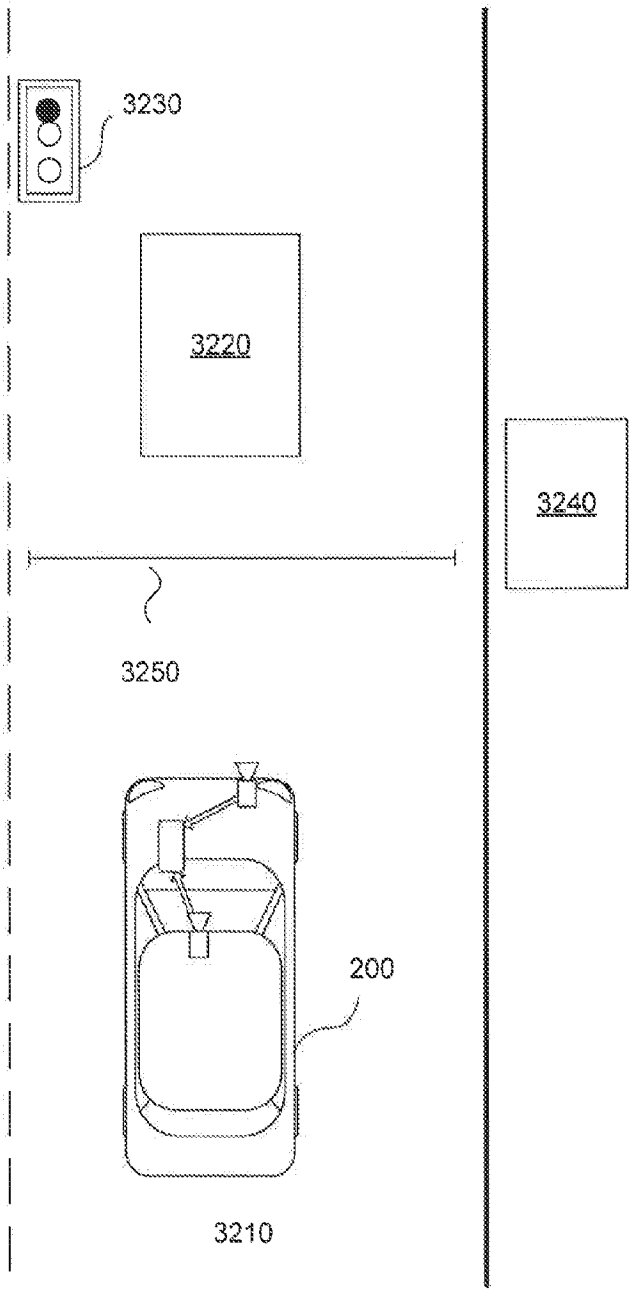

FIG. 32A

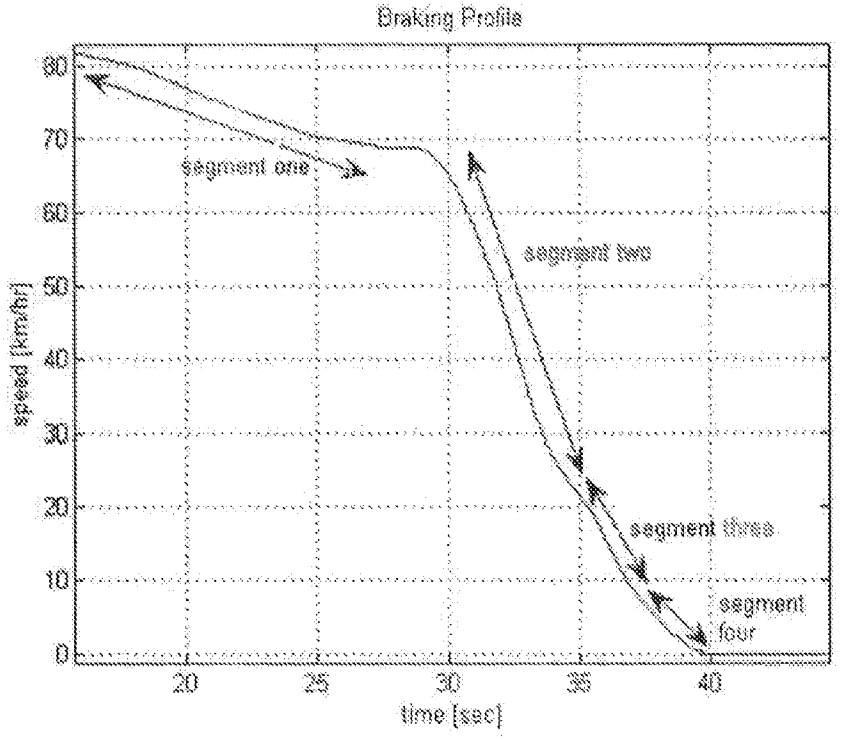

FIG. 32B

IPR2025-01034
Tesla EX1002 Page 1807

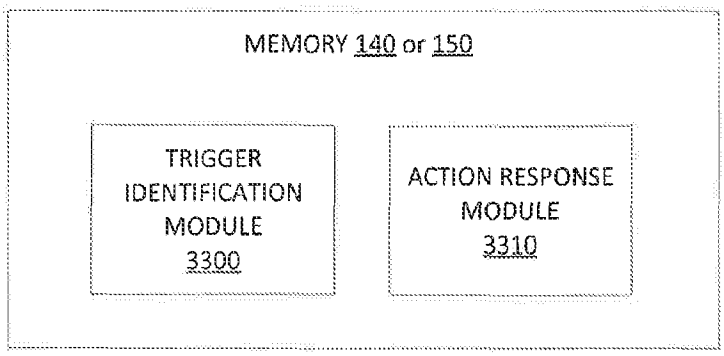
MEMORY 140 or 150
TRIGGER IDENTIFICATION MODULE 3300
ACTION RESPONSE MODULE 3310

FIG. 33

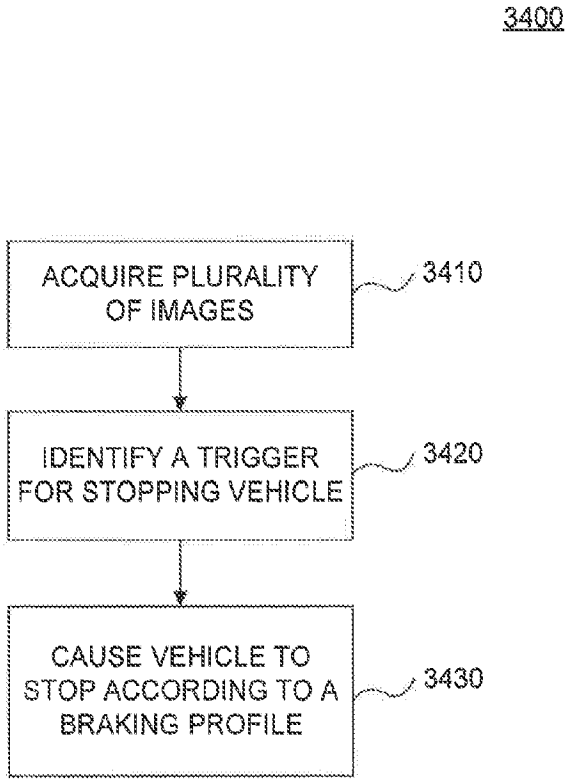
3400
ACQUIRE PLURALITY OF IMAGES
3410
IDENTIFY A TRIGGER FOR STOPPING VEHICLE
3420
CAUSE VEHICLE TO STOP ACCORDING TO A BRAKING PROFILE
3430

FIG. 34

Europäisches Patentamt
European Patent Office
Office européen des brevets

EUROPEAN SEARCH REPORT

Application Number
EP 19 16 0915

DOCUMENTS CONSIDERED TO BE RELEVANT

Category	Citation of document with indication, where appropriate, of relevant passages	Relevant to claim	CLASSIFICATION OF THE APPLICATION (IPC)
X	KOHLHAAS RALF ET AL: "Towards driving autonomously: Autonomous cruise control in urban environments", 2013 IEEE INTELLIGENT VEHICLES SYMPOSIUM (IV), IEEE, 23 June 2013 (2013-06-23), pages 116-121, XP032501914, ISSN: 1931-0587, DOI: 10.1109/IVS.2013.6629457 [retrieved on 2013-10-10]	1-4,10, 12-15	INV. B60W30/14 G06K9/00 B60K31/00 ADD. G06T7/00
Y	* abstract *	6,8,9	
A	* figures 1,3,7,8,9 * * section III * * section IV *	5,7,11	
Y	JP 3 393427 B2 (MITSUBISHI MOTORS CORP) 7 April 2003 (2003-04-07) * claim 1 * * paragraph [0007] - paragraph [0008] *	6,8,9	
A	US 2007/150157 A1 (LEE YONG H [US] ET AL) 28 June 2007 (2007-06-28) * the whole document *	1-15	TECHNICAL FIELDS SEARCHED (IPC) B60K B60W
A	US 2008/294321 A1 (YAMAKADO MAKOTO [JP] ET AL) 27 November 2008 (2008-11-27) * the whole document *	1-15	
A	US 2011/035131 A1 (YASUI YOSHIYUKI [JP] ET AL) 10 February 2011 (2011-02-10) * the whole document *	1-15	

The present search report has be drawn up for all claims

Place of search	Date of completion of the search	Examiner
The Hague	18 June 2019	Martinez, Francis

CATEGORY OF CITED DOCUMENTS

X : particularly relevant if taken alone
Y : particularly relevant if combined with another document of the same category
A : technological background
O : non-written disclosure
P : intermediate document

T : theory or principle underlying the invention
E : earlier patent document, but published on, or after the filing date
D : document cited in the application
L : document cited for other reasons
& : member of the same patent family, corresponding document

EPO FORM 1503 03.82 (P04C01)

IPR2025-01034
Tesla EX1002 Page 1810

ANNEX TO THE EUROPEAN SEARCH REPORT ON EUROPEAN PATENT APPLICATION NO. EP 19 16 0915

This annex lists the patent family members relating to the patent documents cited in the above-mentioned European search report.
The members are as contained in the European Patent Office EDP file on
The European Patent Office is in no way liable for these particulars which are merely given for the purpose of information.

18-06-2019

Patent document cited in search report	Publication date	Patent family member(s)	Publication date
JP 3393427 B2	07-04-2003	JP 3393427 B2	07-04-2003
		JP H10103935 A	24-04-1998
US 2007150157 A1	28-06-2007	CN 101326425 A	17-12-2008
		DE 112006003319 T5	16-10-2008
		US 2007150157 A1	28-06-2007
		WO 2007070160 A2	21-06-2007
US 2008294321 A1	27-11-2008	CN 101318509 A	10-12-2008
		EP 2006177 A2	24-12-2008
		JP 4967806 B2	04-07-2012
		JP 2008290469 A	04-12-2008
		KR 20080102996 A	26-11-2008
		US 2008294321 A1	27-11-2008
US 2011035131 A1	10-02-2011	DE 102010038848 A1	21-04-2011
		JP 5363906 B2	11-12-2013
		JP 2011031845 A	17-02-2011
		US 2011035131 A1	10-02-2011

EPO FORM P0459

For more details about this annex : see Official Journal of the European Patent Office, No. 12/82

IPR2025-01034
Tesla EX1002 Page 1811

Espacenet

Bibliographic data: WO2014058263 (A1) — 2014-04-17

COLLISION WARNING APPARATUS AND COLLISION WARNING METHOD

Inventor(s): JO MIN SUNG [KR]; KANG SEOK HYUN [KR] ± (JO, MIN SUNG, ; KANG, SEOK HYUN)

Applicant(s): JO MIN SUNG [KR]; KANG SEOK HYUN [KR] ± (JO, MIN SUNG, ; KANG, SEOK HYUN)

Classification: **- international:** *G08G1/16*
- cooperative: G08G1/04 (EP); G08G1/052 (EP); G08G1/095 (EP); G08G1/16 (KR); G08G1/164 (EP); G08G1/166 (EP)

Application number: WO2013KR09090 20131011 Global Dossier

Priority number (s): KR20120113215 20121011

Also published as: KR20140046953 (A)

Abstract of WO2014058263 (A1)

The collision warning apparatus according to the present invention comprises: a pedestrian sensing unit for sensing a pedestrian and measuring speed; a vehicle sensing unit for sensing a vehicle and measuring speed; a collision prediction unit for determining a predicted collision point between the pedestrian and the vehicle based on the speed of the pedestrian and the speed of the vehicle, and predicting a collision based on the position of the predicted collision point; and a collision warning unit for warning, if the collision is predicted, the pedestrian or the vehicle.

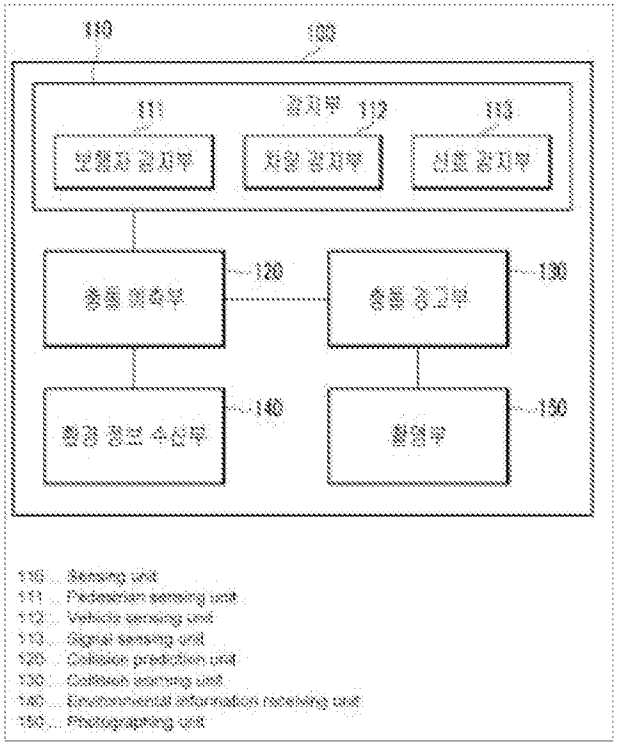
110
100
111
감지부
112
113
보행자 감지부
차량 감지부
신호 감지부
충돌 예측부
120
충돌 경고부
130
환경 정보 수신부
140
촬영부
150
110 ... Sensing unit
111 ... Pedestrian sensing unit
112 ... Vehicle sensing unit
113 ... Signal sensing unit
120 ... Collision prediction unit
130 ... Collision warning unit
140 ... Environmental information receiving unit
150 ... Photographing unit

(12) 특허협력조약에 의하여 공개된 국제출원

(19) 세계지식재산권기구
국제사무국

(43) 국제공개일
2014 년 4 월 17 일 (17.04.2014)

WIPO | PCT

(10) 국제공개번호
WO 2014/058263 A1

(51) 국제특허분류:
G08G 1/16 (2006.01)

(21) 국제출원번호: PCT/KR2013/009090

(22) 국제출원일: 2013 년 10 월 11 일 (11.10.2013)

(25) 출원언어: 한국어

(26) 공개언어: 한국어

(30) 우선권정보:
10-2012-0113215 2012 년 10 월 11 일 (11.10.2012) KR

(72) 발명자; 겸
(71) 출원인 : 조민성 (JO, Min Sung) [KR/KR]; 139-781 서울시 노원구 중계 1 동 359-1 중계주공 5 단지아파트 504 동 1003 호, Seoul (KR). 강석현 (KANG, Seok Hyun) [KR/KR]; 404-785 인천시 서구 가정로 387 119 동 401 호, Incheon (KR).

(74) 대리인: 유미특허법인 (YOU ME PATENT AND LAW FIRM); 135-912 서울시 강남구 테헤란로 115, Seoul (KR).

(81) 지정국 (별도의 표시가 없는 한, 가능한 모든 종류의 국내 권리의 보호를 위하여): AE, AG, AL, AM, AO, AT, AU, AZ, BA, BB, BG, BH, BN, BR, BW, BY, BZ, CA, CH, CL, CN, CO, CR, CU, CZ, DE, DK, DM, DO, DZ, EC, EE, EG, ES, FI, GB, GD, GE, GH, GM, GT, HN, HR, HU, ID, IL, IN, IR, IS, JP, KE, KG, KN, KP, KZ, LA, LC, LK, LR, LS, LT, LU, LY, MA, MD, ME, MG, MK, MN, MW, MX, MY, MZ, NA, NG, NI, NO, NZ, OM, PA, PE, PG, PH, PL, PT, QA, RO, RS, RU, RW, SA, SC, SD, SE, SG, SK, SL, SM, ST, SV, SY, TH, TJ, TM, TN, TR, TT, TZ, UA, UG, US, UZ, VC, VN, ZA, ZM, ZW.

(84) 지정국 (별도의 표시가 없는 한, 가능한 모든 종류의 역내 권리의 보호를 위하여): ARIPO (BW, GH, GM, KE, LR, LS, MW, MZ, NA, RW, SD, SL, SZ, TZ, UG, ZM, ZW), 유라시아 (AM, AZ, BY, KG, KZ, RU, TJ, TM), 유럽 (AL, AT, BE, BG, CH, CY, CZ, DE, DK, EE, ES, FI, FR, GB, GR, HR, HU, IE, IS, IT, LT, LU, LV, MC, MK, MT, NL, NO, PL, PT, RO, RS, SE, SI, SK, SM, TR), OAPI (BF, BJ, CF, CG, CI, CM, GA, GN, GQ, GW, KM, ML, MR, NE, SN, TD, TG).

[다음 쪽 계속]

(54) Title: COLLISION WARNING APPARATUS AND COLLISION WARNING METHOD

(54) 발명의 명칭 : 충돌 경고 장치 및 충돌 경고 방법

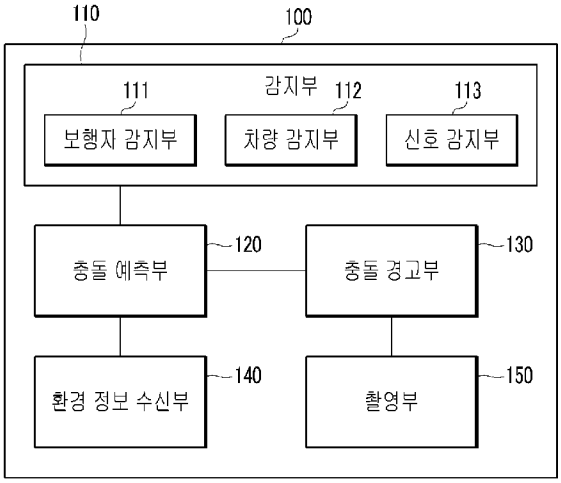

110 ... Sensing unit
111 ... Pedestrian sensing unit
112 ... Vehicle sensing unit
113 ... Signal sensing unit
120 ... Collision prediction unit
130 ... Collision warning unit
140 ... Environmental information receiving unit
150 ... Photographing unit

(57) Abstract: The collision warning apparatus according to the present invention comprises: a pedestrian sensing unit for sensing a pedestrian and measuring speed; a vehicle sensing unit for sensing a vehicle and measuring speed; a collision prediction unit for determining a predicted collision point between the pedestrian and the vehicle based on the speed of the pedestrian and the speed of the vehicle, and predicting a collision based on the position of the predicted collision point; and a collision warning unit for warning, if the collision is predicted, the pedestrian or the vehicle.

(57) 요약서: 본 발명에 따른 충돌 경고 장치는 보행자를 감지하고 속도를 측정하는 보행자 감지부, 차량을 감지하고 속도를 측정하는 차량 감지부, 상기 보행자의 속도 및 상기 차량의 속도를 기초로 상기 보행자와 상기 차량의 충돌 예상 지점을 결정하며, 상기 충돌 예상 지점의 위치에 따라 충돌을 예측하는 충돌 예측부, 그리고 상기 충돌이 예측되면 상기 보행자 또는 상기 차량에게 경고를 수행하는 충돌 경고부를 포함한다.

WO 2014/058263 A1

공개:

— 국제조사보고서와 함께 (조약 제 21 조(3))

명세서

발명의 명칭: 충돌 경고 장치 및 충돌 경고 방법

기술분야

[1] 본 발명은 충돌 경고 장치 및 충돌 경고 방법에 관한 것이다.

배경기술

[2] 현대 사회에는 지상에서 동작하는 자동차 및 열차 등의 다양한 운송 수단이 이용되고 있다. 이러한 운송 수단은 운송 수단끼리 또는 운송 수단과 보행자와의 충돌이 발생할 위험성을 갖고 있다. 그 예로 미국 연방 도로 안전 관리국(National Highway Traffic Safety Administration)에 따르면 2008년 한 해 동안 미국 내 교차로에서 발생한 사고는 230만 건이며, 그 결과 7,000명이 목숨을 잃었다. 그 중 700명은 교차로에서 정지신호를 무시하고 무리하게 통과하는 과정에서 발생하였다. 미국도로안전보험협회(Insurance Institute for Highway Safety)는 신호 관련 사망자의 절반은 운전자 본인이지만, 그 밖에 다른 운전자, 동승자 또는 보행자가 사망한 경우도 절반에 이르는 것을 확인했다.

[3] 이러한 사고들은 운전자의 신체 반응 속도에 따라 그 발생도가 높아질 수 있다. 25세 이상의 운전자가 장애물을 발견하고 순간적으로 핸들과 브레이크 페달을 밟는데 걸리는 시간은 0.23초 이지만 65세 이상의 고령 운전사는 0.42초 걸리기 때문에 고령 운전자와 같은 교통 약자에 대한 안전 문제가 대두되고 있다.

[4] 이에 따라 횡단보도 주변에 자동차와 보행자 등의 충돌을 제어하기 위하여 자동차용 신호등과 보행자용 신호등이 설치되며 보행 신호, 주행 신호 및 대기 신호가 표시 된다. 그러나 이러한 신호등은 단순히 신호를 표시하기만 하여 신호를 무시하고 자동차 등이 주행하거나 보행자가 신호 변경에도 불구하고 횡단 보도 보행이 완료되지 않은 경우에, 사고를 방지하기 위해서는 운전자나 보행자가 충돌을 스스로 예측하여야 하는데 현실적으로 예측이 어렵다.

[5] 또한 보행 신호가 표시되는 동안 이를 알려주는 장치 등이 사용되기도 하며, 횡단 보도 등의 주위에 보행자를 감지하여 주행하는 차량에게 이를 알려주는 장치 등이 사용되기도 하고 있다.

[6] 그러나 이러한 장치 들은 대부분 일반적인 운전자 위주의 장치이며, 사고 상황에 대한 정확한 예측과 대처가 미흡하여 교통 약자에 대한 사고를 방지할 수 있는 효과적인 장치가 존재하지 않는 실정이다. 또한 종래의 장치는 위험 신호를 수신하기 위한 장치를 보행자가 구비하거나 차량에 설치되기도 하는데, 이러한 장치를 마련하지 못한 경우에는 다른 대책이 없으며, 신호로 인하여 주변 교통 혼잡이 야기되기도 한다.

발명의 상세한 설명

기술적 과제

[7] 본 발명이 이루고자 하는 기술적 과제는 운송 수단 및 보행자 등의 움직이는

주체 사이의 충돌을 정확히 예측하여 이를 경고함으로써, 교통 약자에 대한 사고를 효과적으로 방지하는 것이다.

[8] 또한 본 발명이 이루고자 하는 기술적 과제는 충돌 경고에 필요한 구성을 일체형으로 구현하여 저렴하고 설치가 용이하게 하며, 교통 혼잡을 야기시키지 않으면서 충돌 사고를 원활하게 방지하는 것이다.

과제 해결 수단

[9] 본 발명의 한 실시예에 따른 충돌 경고 장치는 보행자를 감지하고 속도를 측정하는 보행자 감지부, 차량을 감지하고 속도를 측정하는 차량 감지부, 상기 보행자의 속도 및 상기 차량의 속도를 기초로 상기 보행자와 상기 차량의 충돌 예상 지점을 결정하며, 상기 충돌 예상 지점의 위치에 따라 충돌을 예측하는 충돌 예측부, 그리고 상기 충돌이 예측되면 상기 보행자 또는 상기 차량에게 경고를 수행하는 충돌 경고부를 포함한다.

[10] 상기 충돌 예측부는 상기 충돌 예상 지점이 상기 차량의 예상 경로 중에 존재하면 충돌을 예측할 수 있다.

[11] 상기 충돌 예측부는, 상기 차량의 보행선까지의 도달 시간을 산출하고, 상기 도달 시간에 상기 보행자의 위치를 산출함으로써 상기 충돌 예상 지점을 결정할 수 있다.

[12] 상기 충돌 예측부는 상기 보행자 감지부의 감지 내용에 따라 상기 보행자를 교통 약자로 판단하며, 상기 충돌 경고부는 상기 교통 약자에 대한 경고 수준을 조정할 수 있다.

[13] 상기 충돌 예측부는, 상기 차량의 속도를 기초로 제동 거리, 공주 거리 및 정지 거리를 산출하며, 상기 충돌 경고부는 상기 차량의 위치에 따라 경고 수준을 조정할 수 있다.

[14] 상기 충돌 예측부는 노면의 상태에 따라 상기 제동 거리, 상기 공주 거리 및 상기 정지 거리를 다르게 산출할 수 있다.

[15] 상기 충돌 예측부는, 현재 운행되고 있는 차량의 최고 속도에서의 정지 거리를 고려하여 주의 구간을 설정하고, 상기 차량 감지부는 상기 주의 구간에 진입한 차량을 감지할 수 있다.

[16] 주변 신호등의 신호 상태를 감지하는 신호 감지부를 더 포함할 수 있다.

[17] 상기 충돌 경고부는, 차단바, 경광등, 비상 신호등, 문자 발광등 및 스피커 중 적어도 하나를 포함할 수 있다.

[18] 상기 차단바는 제1 방향 및 제2 방향으로 회전 이동하며, 상기 제1 방향은 인도와 차도를 차단하고, 상기 제2 방향은 차량과 보행선을 차단할 수 있다.

[19] 상기 주변 신호등이 주행 신호를 표시하는 경우, 상기 충돌 경고부는 상기 차단바를 상기 제1 방향으로 위치하게 하며, 상기 주변 신호등이 보행 신호를 표시하는 경우, 상기 충돌 경고부는 상기 차단바를 상기 제2 방향으로 위치하게 할 수 있다.

[20] 상기 충돌 경고 장치는 상기 차단바가 상기 제1 방향에 위치하는 경우 상기 보행자가 상기 차단바를 넘는 경우에 경고를 수행할 수 있다.

[21] 본 발명의 다른 실시예에 따른 충돌 경고 방법은 충돌 경고 장치가 보행자 또는 차량에게 충돌을 경고하는 방법으로서, 상기 보행자를 감지하고 속도를 측정하는 단계, 상기 차량을 감지하고 속도를 측정하는 단계, 상기 보행자의 속도 및 상기 차량의 속도를 기초로 상기 보행자와 상기 차량의 충돌 예상 지점을 결정하는 단계, 상기 충돌 예상 지점이 상기 차량의 예상 경로 중에 존재하고 있으면 충돌을 예측하는 단계, 그리고 상기 충돌이 예측되면 상기 보행자 또는 상기 차량에게 경고를 수행하는 단계를 포함한다.

[22] 상기 보행자와 상기 차량의 충돌 예상 지점을 결정하는 단계는, 상기 차량의 보행선까지의 도달 시간을 산출하는 단계, 그리고 상기 도달 시간에 상기 보행자의 위치를 산출하는 단계를 포함할 수 있다.

[23] 상기 차량에게 경고를 수행하는 단계는, 차단바를 제어하는 단계, 경광등, 비상 신호등 또는 문자 발광등을 구동하는 단계, 그리고 스피커를 통하여 경고 방송하는 단계중 적어도 하나를 포함할 수 있다.

[24] 주변 신호등의 신호 상태를 감지하는 단계, 그리고 상기 신호 상태에 따라 상기 차단바의 위치를 조정하는 단계를 포함할 수 있다.

[25] 상기 차량의 충돌 예상 지점을 결정하는 단계는, 상기 차량의 속도를 기초로 제동 거리, 공주 거리 및 정지 거리를 산출하는 단계를 포함하며, 상기 차량에게 경고를 수행하는 단계는, 상기 차량의 위치에 따라 경고 수준을 조정할 수 있다.

발명의 효과

[26] 본 발명의 한 실시예에 따르면 운송 수단 및 보행자 등의 움직이는 주체 사이의 충돌을 정확히 예측하여 이를 경고함으로써 교통 약자에 대한 사고를 효과적으로 방지할 수 있다. 또한 본 발명의 한 실시예에 따르면 교통 혼잡을 야기시키지 않으면서 충돌 사고를 원활하게 방지할 수 있으며, 상대적으로 적은 비용으로 충돌 경고 장치를 마련할 수 있다.

도면의 간단한 설명

[27] 도 1은 본 발명의 한 실시예에 따른 충돌 경고 장치의 블록도이다.

[28] 도 2는 본 발명의 한 실시예에 따른 충돌 경고 장치의 외부를 도시하는 도면이다.

[29] 도 3은 본 발명의 한 실시예에 따른 충돌 경고 장치가 동작하는 환경을 도시하는 도면이다.

[30] 도 4는 본 발명의 한 실시예에 따른 충돌 경고 장치의 충돌 경고 방법을 설명하는 흐름도이다.

[31] 도 5는 본 발명의 한 실시예에 따른 충돌 경고 방법 중 신호등 모드의 동작을 설명하는 흐름도이다.

[32] 도 6은 본 발명의 한 실시예에 따른 충돌 경고 방법 중 보행자 감지 방법을

설명하는 흐름도이다.

[33] 도 7은 본 발명의 한 실시예에 따른 충돌 경고 방법 중 차량 감지 방법을 설명하는 흐름도 이다.

[34] 도 8은 본 발명의 한 실시예에 따른 충돌 경고 방법 중 충돌 예측 방법을 설명하는 흐름도이다.

발명의 실시를 위한 형태

[35] 아래에서는 첨부한 도면을 참고로 하여 본 발명의 실시예에 대하여 본 발명이 속하는 기술 분야에서 통상의 지식을 가진 자가 용이하게 실시할 수 있도록 상세히 설명한다. 그러나 본 발명은 여러 가지 상이한 형태로 구현될 수 있으며 여기에서 설명하는 실시예에 한정되지 않는다. 그리고 도면에서 본 발명을 명확하게 설명하기 위해서 설명과 관계없는 부분은 생략하였으며, 명세서 전체를 통하여 유사한 부분에 대해서는 유사한 도면 부호를 붙였다.

[36] 명세서 전체에서, 어떤 부분이 어떤 구성요소를 "포함"한다고 할 때, 이는 특별히 반대되는 기재가 없는 한 다른 구성요소를 제외하는 것이 아니라 다른 구성요소를 더 포함할 수 있는 것을 의미한다. 또한, 명세서에 기재된 "...부", "...기", "모듈" 등의 용어는 적어도 하나의 기능이나 동작을 처리하는 단위를 의미하며, 이는 하드웨어나 소프트웨어 또는 하드웨어 및 소프트웨어의 결합으로 구현될 수 있다.

[37] 도면을 참고하여 본 발명의 한 실시예에 따른 충돌 경고 장치에 대하여 상세하게 설명한다.

[38] 도 1은 본 발명의 한 실시예에 따른 충돌 경고 장치의 블록도이며, 도 2는 본 발명의 한 실시예에 따른 충돌 경고 장치의 외부를 도시하는 도면이다.

[39] 도 1 및 도 2를 참고하면, 본 발명의 한 실시예에 따른 충돌 경고 장치(100)는 감지부(110), 충돌 예측부(120), 충돌 경고부(130), 환경 정보 수신부(140) 및 촬영부(150)를 포함한다.

[40] 감지부(110)는 보행자 감지부(111), 차량 감지부(112) 및 신호 감지부(113)를 포함한다.

[41] 보행자 감지부(111)는 주변 보행자의 존재를 감지하여 보행자의 위치 및 속도를 인식하고 측정한다. 이를 위하여 보행자 감지부(111)는 거리 측정 장치(도시하지 않음), 영상 분석 장치(도시하지 않음) 및 속도 측정 장치(114) 등을 구비할 수 있다. 또한 보행자 감지부(111)는 야간에 보행자를 감지하기 위하여 적외선 감지 장치를 구비할 수 있다.

[42] 차량 감지부(112)는 주변 차량의 존재를 감지하여, 차량의 위치 및 속도를 인식하고 측정한다. 이를 위하여 차량 감지부(112) 역시 거리 측정 장치(도시하지 않음), 영상 분석 장치(도시하지 않음) 및 속도 측정 장치(115) 등을 구비할 수 있다. 또한 차량 감지부(112)는 야간에 차량을 감지하기 위하여 적외선 감지 장치를 구비할 수 있다.

[43] 신호 감지부(113)는 주변 신호등의 신호를 감지한다.

[44] 충돌 예측부(120)는 감지부(110)에서 감지한 정보를 기초로 두 주체, 예를 들어 차량과 보행자의 충돌을 예측한다.

[45] 충돌 경고부(130)는 충돌 예측부(120)의 예측 결과에 따라 차량 및 보행자에게 충돌에 대한 경고를 알린다. 이러한 충돌 경고부(130)는 차단 바(31), 경광등(32), 비상 신호등(33), 문자 발광등(34) 및 스피커(35) 중 적어도 하나를 포함할 수 있다. 차단 바(31)는 제1 방향(A) 및 제2 방향(B)으로 회전 이동할 수 있으며, 제1 방향(A)은 인도와 차도를 차단하며, 제2 방향(B)은 차량과 보행선을 차단한다.

[46] 이제 도 3을 참고하여 본 발명의 한 실시예에 따른 충돌 경고 장치의 충돌 예측부 및 충돌 경고부의 동작에 대하여 상세하게 설명한다.

[47] 도 3은 본 발명의 한 실시예에 따른 충돌 경고 장치가 동작하는 환경을 도시하는 도면이다.

[48] 도 3을 참고하면, 충돌 경고 장치(100)의 보행자 감지부(111)는 보행자(210, 220, 230)를 감지한다. 보행자 감지부(110)는 차선으로 진입하여 보행선(AL)을 따라 이동하는 보행자(220)를 감지한다. 이때 보행자 감지부(110)의 영상 분석 장치는 보행자의 영상 정보를 수신할 수 있으며, 영상의 특징, 예를 들어 보행자의 키 등을 파악하여 교통 약자를 판단할 수 있다. 보행자 감지부(110)의 속도 측정 장치(114)는 보행자(220)가 보행선(AL)을 걷는 속도를 측정하며, 속도에 따라 보행자(220)를 교통 약자로 판단할 수 있다.

[49] 충돌 경고 장치(100)의 차량 감지부(112)는 주의 구간(Z)으로 진입하는 차량(300)을 감지한다. 이때 차량 감지부(112)의 영상 분석 장치는 차량의 영상 정보를 수신할 수 있다. 또한 속도 측정 장치(115)는 차량(300)의 속도를 측정한다.

[50] 충돌 예측부(120)는 보행자의 위치, 보행자의 속도, 차량의 위치 및 차량의 속도를 기초로 차량(300)의 공주 거리, 제동 거리 및 정지 거리를 산출하며, 보행자(220)와 차량(300)의 충돌 예상 지점(AB)를 판단한다. 이때 공주 거리, 제동 거리 및 정지 거리는 노면의 상태에 따라 다르게 산출될 수 있으며, 노면의 상태는 환경 정보 수신부(140)가 획득한 날씨 정보 등에 따라 판단될 수 있다.

[51] 충돌 예상 지점(AB)은 충돌 경고 장치(100)가 감지한 차량(300)이 감지된 속도로 주행할 경우 보행선(AL)에 도달하는 시간을 산출한 후, 산출된 시간 후에 보행자(220)가 보행선(AL)의 어느 위치에 도달하는지를 판단하여 결정된 지점이다.

[52] 충돌 예상 지점(AB)이 차량(300)의 예상 경로 중에 존재하면 차량(300)과 보행자(220)는 차선에서 충돌이 예측되며, 예상 경로 중에 존재하지 않으면 차량(300)과 보행자(220)는 차선에서 충돌이 예측되지 않는다고 판단된다.

[53] 주의 구간(Z)은 충돌 예상 지점(AB)에서 차량의 정지 거리를 고려한 안전 구간이며, 예를 들어 충돌 경고 장치(100)를 설치하는 시기에 판매되는 차량 중에서 평균적으로 가장 많이 사용되는 차량의 최고 속도에서 산출되는 차량의

공식 정지 거리로 정해질 수 있다. 대부분의 차량은 주의 구간(Z)의 범위 내에서 정지 거리를 갖기 때문에 충돌 경고 장치(100)가 주의 구간(Z)에 진입하는 차량에 한정하여 감지하여도 충돌 방지가 충분히 이루어질 수 있다.

[54] 한편, 충돌 예측부(120)는 충돌 예상 지점(AB)에서 차량(300)이 정지하기 위한 제동 거리를 X 지점으로 결정할 수 있으며, 충돌 예상 지점(AB)에서 차량(300)이 제동되기 위하여 운전자가 제동 장치를 작동하여 제동이 시작될 때까지의 거리를 구분한 공주 거리를 Y 지점으로 결정할 수 있다. 해당 차량의 정지 거리는 제동 거리+공주 거리이다.

[55] 한편, 보행자(210)가 주행 신호 시 차단 바(31)로부터 일정한 거리를 두도록 설정한 안전선(DL)이 설정될 수 있으며, 보행자(210)는 주행 신호가 보행 신호로 바뀔 때까지 안전선(DL) 내에서 대기할 수 있다. 만일 보행자(210)가 안전선(DL)을 넘어서서 이동하는 경우 신호 감지부(113)는 월선을 감지하여 스피커(35)를 통하여 경고 방송을 할 수 있다.

[56] 주행 신호인 경우, 차단 바(31)는 제1 방향(A)으로 위치하여, 보행자(210)와 차도를 차단한다. 보행 신호인 경우 차단 바(31)는 중심 축(C)을 기준으로 회전하여 제2 방향(B)으로 이동하여 차량(300)의 보행선(AL) 내 진입을 차단한다. 즉 차단 바(31)는 신호에 따라서 보행자(210) 및 차량(300)을 선택적으로 차단할 수 있으며, 보행자(210)와 차량(300)의 충돌 상황이 예측되는 경우에도 작동할 수 있다.

[57] 다시 도 1을 참고하면, 환경 정보 수신부(140)는 정지 거리 산출을 위한 상용 차량(300)의 정지 거리에 대한 정보를 수신할 수 있으며, 주변 교통 상황 또는 날씨 정보를 수신할 수 있다. 또한 환경 정보 수신부(140)는 교통 통제 기관으로부터 주변 교통 정보를 수신할 수 있다.

[58] 촬영부(150)는 교통 법규를 위반하는 차량이나 보행자를 촬영하거나 교통 흐름에 대한 영상을 획득할 수 있으며, 폐쇄 회로 티비 카메라(closed circuit TV camera)를 포함할 수 있다. 촬영부(150)는 촬영한 내용을 관계 당국에 전송할 수 있다.

[59] 이러한 충돌 경고 장치(100)는 도 3과 같이 보행자와 차량이 존재하는 곳에 독립적으로 설치될 수 있으며, 이와 달리 기존 신호등의 지지대에 부착되어 설치될 수도 있다.

[60] 이제 도 4 내지 도 9를 참고하여 본 발명의 한 실시예에 따른 충돌 경고 방법을 설명한다.

[61] 도 4는 본 발명의 한 실시예에 따른 충돌 경고 장치의 충돌 경고 방법을 설명하는 흐름도이다.

[62] 도 4를 참고하면, 충돌 경고 장치(100)는 비상 신호등(33)을 이용하여 신호등 모드로 동작한다(S100). 충돌 경고 장치(100)는 신호등 모드로 동작하다가 보행자를 감지한다(S200). 또한 충돌 경고 장치(100)는 신호등 모드로 동작하다가 차량을 감지한다(S300).

[63] 또한 충돌 경고 장치(100)는 신호등 모드로 동작하다가 충돌할 수 있는 두 주체를 감지하여, 두 주체의 충돌을 예측한다(S400). 그런 후 충돌 경고 장치(100)는 두 주체의 충돌을 경고한다(S500).

[64] 이제 도 5를 참고하여 도 4의 신호등 모드 동작 단계(S100)를 상세하게 설명한다.

[65] 도 5는 본 발명의 한 실시예에 따른 충돌 경고 방법 중 신호등 모드의 동작을 설명하는 흐름도이다.

[66] 도 5를 참고하면, 충돌 경고 장치(100)는 주변에 신호등이 존재하는지 여부를 판단한다(S110). 단계(S110)에서 판단 결과 신호등이 존재하는 경우 신호등의 고장 나기나 황색 또는 적색 점멸 신호가 표시되고 있는지를 판단한다(S111). 이때 황색 또는 적색 점멸 신호는 상대적으로 교통량이 한산한 지역 또는 시간에 차량 통행의 흐름을 원활하게 하고 운전자의 불필요한 신호대기를 없에기 위하여 교차로의 신호등을 표시하는 신호이다. 단계(S111)에서 판단 결과 신호등이 고장 나거나 황색 또는 적색 점멸 신호가 표시되고 있는 경우에는 중앙 관제 신호를 수신하거나 주변 교통 흐름을 감지한다(S112). 이어서 충돌 경고 장치(100)는 비상 신호등을 가동하여 신호등 모드로 동작한다(S113).

[67] 단계(S110)에서 판단 결과 주변에 신호등이 존재하지 않는 경우에는 단계(S113)를 수행하며, 단계(S111)에서 판단 결과 신호등이 고장 나지 않은 경우에는 신호등 모드 동작을 종료한다.

[68] 충돌 경고 장치(100)가 신호등 모드로 동작할 때, 신호 상태를 판단한다(S114). 단계(S114)에서 판단 결과 신호가 보행자 정지 신호인 경우에 충돌 경고 장치(100)의 차단 바(31)는 제1 방향(A)으로 위치하게 한다(S115). 단계(S114)에서 판단 결과 신호가 보행자 보행 신호인 경우에 차단 바(31)는 제2 방향(B)으로 위치하게 한다(S116). 단계(S114)에서 판단 결과 신호가 황색 또는 적색 점멸 신호인 경우, 차단 바(31)는 황색 또는 적색 점멸 신호의 설정된 시간에 맞추어 제2 방향(B)으로 위치하게 한다(S117).

[69] 이에 따라 황색 또는 적색 점멸 구간이나 주변 신호등이 없는 사고 다발 지역에 본 발명의 한 실시시예에 따른 충돌 경고 장치(100)를 설치하여, 간편하게 보행자 보호 효과를 기대할 수 있다.

[70] 이제 도 6을 참고하여 도 4의 보행자 감지 단계(S200)를 상세하게 설명한다.

[71] 도 6은 본 발명의 한 실시예에 따른 충돌 경고 방법 중 보행자 감지 방법을 설명하는 흐름도이다.

[72] 도 6을 참고하면, 충돌 경고 장치(100)는 주변 신호등의 신호가 보행자 정지신호인지 여부를 판단한다(S211). 단계(S211)에서 판단 결과 신호등의 신호가 보행자 정지 신호인 경우 보행자가 안전선을 넘었는지 여부를 판단한다(S212). 단계(S212)에서 판단 결과 보행자가 안전선을 넘은 경우에는 보행자가 차단 바(31)를 통과했는지 여부를 판단한다(S213). 단계(S213)에서 판단 결과 보행자가 차단 바(31)를 통과하지 않은 경우에는 충돌 경고

장치(100)는 스피커(35)를 이용하여 안전선 뒤로 이동을 요청하는 방송을 한다(S214).

[73] 단계(S213)에서 판단 결과 보행자가 차단 바(31)를 통과한 경우에는 보행자가 차도에 진입했는지 여부를 판단한다(S215). 단계(S215)에서 판단 결과 보행자가 차도에 진입한 경우에는 보행자가 교통 약자인지 여부를 판단한다(S216). 단계(S216)에서 판단 결과 보행자가 교통 약자인 경우에는 신호 위반 경고 방송을 한다(S217). 이어서 충돌 경고 장치(100)는 제1 방향(A)으로 차단 바(31)를 위치하게 한다(S218). 단계(S216)에서 판단 결과 보행자가 교통 약자가 아닌 경우에는 바로 단계(S218)로 진입한다.

[74] 한편, 단계(S215)에서 판단 결과 보행자가 차도에 진입하지 않은 경우에는 보행자가 안전지대로 복귀했는지 여부를 판단한다(S219). 단계(S219)에서 판단 결과, 보행자가 안전지대로 복귀한 경우에는 시작으로 돌아가고, 안전 지대로 복귀하지 않은 경우에는 위험 경고 방송을 수행한다(S220).

[75] 이제 도 7을 참고하여 도 4의 차량 감지 단계(S300)를 상세하게 설명한다.

[76] 도 7은 본 발명의 한 실시예에 따른 충돌 경고 방법 중 차량 감지 방법을 설명하는 흐름도 이다.

[77] 도 7을 참고하면, 충돌 경고 장치(100)는 주변 신호등의 신호가 차량 정지신호인지 여부를 판단한다(S311). 단계(S311)에서 판단 결과 신호등의 신호가 차량 정지 신호인 경우 차량이 주의 구간에 진입했는지 여부를 판단한다(S312). 단계(S312)에서 차량이 주의 구간에 진입한 경우에는 차량이 해당 차량의 정지 거리에 진입했는지 여부를 판단한다(S313). 단계(S313)에서 차량이 정지 거리에 진입하지 않은 경우에는 충돌 경고 장치(100)는 스피커(35)를 이용하여 차량 속도 감속 요구 방송을 수행한다(S314).

[78] 단계(S313)에서 차량이 정지 거리에 진입한 경우에는 차량이 규정 속도를 위반했는지 여부를 판단한다(S315). 단계(S315)에서 차량이 규정 속도를 위반한 경우에는 속도 위반 경고 방송을 수행하고(S316), 제1 방향(A)으로 차단바를 위치하게 한다(S317).

[79] 단계(S315)에서 차량이 규정 속도를 위반하지 않은 경우에는 차량이 감속하고 있는지 여부를 판단한다(S318). 단계(S318)에서 감속하고 있다고 판단되면, 이상의 단계를 반복하고, 감속하고 있지 않다고 판단되면 위험 경고 방송을 수행하고(S319), 이상의 단계를 반복한다.

[80] 이제 도 8을 참고하여 도 4의 두 주체 충돌 예측 단계(S400)를 상세하게 설명한다.

[81] 도 8은 본 발명의 한 실시예에 따른 충돌 경고 방법 중 두 주체의 충돌 예측 방법을 설명하는 흐름도이다.

[82] 도 8을 참고하면, 충돌 경고 장치(100)는 차선에 진입하는 보행자와 주의 구간에 진입하는 차량을 감지하는 경우, 보행자의 위치 및 속도와 차량의 위치 및 속도를 측정한다(S411).

[83] 그런 후 충돌 경고 장치(100)는 측정한 내용을 기초로 차량이 보행선까지 도달하는 시간을 산출하고(S412), 차량의 보행선 도달 시점에 보행자의 위치를 산출한다(S413). 이어서 충돌 경고 장치(100)는 산출 결과에 따라 충돌 예상 지점을 결정하고, 차량의 속도를 기준으로 공주 거리, 제공 거리 및 정지 거리를 산출한다(S414). 그런 후 도 4와 같이 두 주체의 충돌 경고 단계(S500)를 수행한다.

[84] 두 주체의 충돌 경고 단계(S500)는 충돌 경고 장치(100)의 차량 위치 판단을 선행하고 수행될 수 있다. 즉, 차량이 공주 거리와 제공 거리 사이에 위치하는지 또는 차량이 공주 거리와 주의 구간 사이에 위치하는지에 따라 충돌 위험 확률을 다르게 판단하여 선택적으로 경고를 수행할 수 있다. 앞서 설명한 바와 같이 경고는 차단바를 차량 쪽으로 위치하게 하고, 정지 문자 발광, 경광등, 비상 신호등 구동 및 경고 방송 등을 통하여 이루어질 수 있다.

[85] 이와 같이 본 발명에 따르면 차량 및 보행자의 충돌 예상 지점을 판단하여 충돌 여부를 정확히 판단하여 경고함으로써 주변 교통 혼잡을 불필요하게 자주 야기 하지 않으면서도 보행자에 대한 사고를 효과적으로 방지할 수 있다.

[86] 또한 모든 차량이나 보행자 각각이 경고 장치를 따로 소지 하지 않아도 충돌운송 경고가 가능하여 상대적으로 적은 비용으로 사고 방지가 가능하다.

[87] 이상에서 설명한 본 발명의 실시예는 장치 및 방법을 통해서만 구현이 되는 것은 아니며, 본 발명의 실시예의 구성에 대응하는 기능을 실현하는 프로그램 또는 그 프로그램이 기록된 기록 매체를 통해 구현될 수도 있다.

[88] 이상에서 본 발명의 실시예에 대하여 상세하게 설명하였지만 본 발명의 권리범위는 이에 한정되는 것은 아니고 다음의 청구범위에서 정의하고 있는 본 발명의 기본 개념을 이용한 당업자의 여러 변형 및 개량 형태 또한 본 발명의 권리범위에 속하는 것이다.

청구범위

[청구항 1] 보행자를 감지하고 속도를 측정하는 보행자 감지부,
차량을 감지하고 속도를 측정하는 차량 감지부,
상기 보행자의 속도 및 상기 차량의 속도를 기초로 상기 보행자와 상기 차량의 충돌 예상 지점을 결정하며, 상기 충돌 예상 지점의 위치에 따라 충돌을 예측하는 충돌 예측부, 그리고
상기 충돌이 예측되면 상기 보행자 또는 상기 차량에게 경고를 수행하는 충돌 경고부
를 포함하는 충돌 경고 장치.

[청구항 2] 제1항에서,
상기 충돌 예측부는
상기 충돌 예상 지점이 상기 차량의 예상 경로 중에 존재하면 충돌을 예측하는 충돌 경고 장치.

[청구항 3] 제1항에서,
상기 충돌 예측부는,
상기 차량의 보행선까지의 도달 시간을 산출하고, 상기 도달 시간에 상기 보행자의 위치를 산출함으로써 상기 충돌 예상 지점을 결정하는 충돌 경고 장치.

[청구항 4] 제1항에서,
상기 충돌 예측부는 상기 보행자 감지부의 감지 내용에 따라 상기 보행자를 교통 약자로 판단하며, 상기 충돌 경고부는 상기 교통 약자에 대한 경고 수준을 조정하는 충돌 경고 장치.

[청구항 5] 제1항에서,
상기 충돌 예측부는, 상기 차량의 속도를 기초로 제동 거리, 공주 거리 및 정지 거리를 산출하며,
상기 충돌 경고부는 상기 차량의 위치에 따라 경고 수준을 조정하는 충돌 경고 장치.

[청구항 6] 제5항에서,
상기 충돌 예측부는 노면의 상태에 따라 상기 제동 거리, 상기 공주 거리 및 상기 정지 거리를 나르게 산출하는 충돌 경고 장치.

[청구항 7] 제1항에서,
상기 충돌 예측부는, 현재 운행되고 있는 차량의 최고 속도에서의 정지 거리를 고려하여 주의 구간을 설정하고,
상기 차량 감지부는 상기 주의 구간에 진입한 차량을 감지하는 충돌 경고 장치.

[청구항 8] 제1항에서,
주변 신호등의 신호 상태를 감지하는 신호 감지부를 더 포함하는

충돌 경고 장치.

[청구항 9] 제8항에서,
상기 충돌 경고부는,
차단바, 경광등, 비상 신호등, 경고를 표시하는 문자 발광등 및 경고 방송을 하는 스피커 중 적어도 하나를 포함하는 충돌 경고 장치.

[청구항 10] 제9항에서,
상기 차단바는 제1 방향 및 제2 방향으로 회전 이동하며,
상기 제1 방향은 인도와 차도를 차단하고, 상기 제2 방향은 차량과 보행선을 차단하는
충돌 경고 장치.

[청구항 11] 제10항에서
상기 주변 신호등이 주행 신호를 표시하는 경우, 상기 충돌 경고부는 상기 차단바를 상기 제1 방향으로 위치하게 하며,
상기 주변 신호등이 보행 신호를 표시하는 경우, 상기 충돌 경고부는 상기 차단바를 상기 제2 방향으로 위치하게 하는
충돌 경고 장치.

[청구항 12] 제1항에서,
상기 충돌 경고 장치는 상기 차단바가 상기 제1 방향에 위치하는 경우 상기 보행자가 상기 차단바를 넘는 경우에 상기 경고를 수행하는 충돌 경고 장치.

[청구항 13] 제12항에서,
상기 보행자 감지부는 영상 분석 장치를 포함하며,
상기 영상 분석 장치를 통하여 상기 보행자가 상기 차단바를 넘는 것을 인식하는 충돌 경고 장치.

[청구항 14] 충돌 경고 장치가 보행자 또는 차량에게 충돌을 경고하는 방법으로서,
상기 보행자를 감지하고 속도를 측정하는 단계,
상기 차량을 감지하고 속도를 측정하는 단계,
상기 보행자의 속도 및 상기 차량의 속도를 기초로 상기 보행자와 상기 차량의 충돌 예상 지점을 결정하는 단계,
상기 충돌 예상 지점이 상기 차량의 예상 경로 중에 존재에 있으면 충돌을 예측하는 단계, 그리고
상기 충돌이 예측되면 상기 보행자 또는 상기 차량에게 경고를 수행하는 단계
를 포함하는 충돌 경고 방법.

[청구항 15] 제14항에서,
상기 보행자와 상기 차량의 충돌 예상 지점을 결정하는 단계는,

상기 차량의 보행선까지의 도달 시간을 산출하는 단계, 그리고
상기 도달 시간에 상기 보행자의 위치를 산출하는 단계
를 포함하는 충돌 경고 방법.

[청구항 16] 제14항에서,
상기 차량에게 경고를 수행하는 단계는,
차단바를 제어하는 단계,
경광등, 비상 신호등 또는 문자 발광등을 구동하는 단계, 그리고
스피커를 통하여 경고 방송하는 단계
중 적어도 하나를 포함하는 충돌 경고 방법.

[청구항 17] 제16항에서,
주변 신호등의 신호 상태를 감지하는 단계, 그리고
상기 신호 상태에 따라 상기 차단바의 위치를 조정하는 단계
를 포함하는 충돌 경고 방법.

[청구항 18] 제16항에서,
주변 신호등이 보행자 정지 신호인 경우 상기 보행자가 상기
차단바를 통과하였는지 판단하는 단계,
상기 보행자가 상기 차단바를 통과하지 않은 경우 경고 방송하는
단계,
상기 보행자가 상기 차단바를 통과한 경우 상기 보행자가 차도
진입 여부를 판단하는 단계, 그리고
상기 보행자가 차도에 진입한 경우에는 상기 차단바를 인도와
상기 차도를 차단하는 방향으로 위치하게 하는 단계
를 포함하는 충돌 경고 방법.

[청구항 19] 제16항에서,
주변 신호등이 차량 정지 신호인 경우 상기 차량이 정지 거리에
진입하였는지를 판단하는 단계,
상기 차량이 정지 거리에 진입하지 않은 경우에는 감속 요구
방송을 하는 단계,
상기 차량이 정지 거리에 진입한 경우 규정 속도 위반 여부를
판단하는 단계, 그리고
상기 차량이 규정 속도를 위반한 경우에는 상기 차단바를 차량과
보행선을 차단하는 방향으로 위치하게 하는 단계
를 포함하는 충돌 경고 방법.

[청구항 20] 제14항에서,
상기 차량의 충돌 예상 지점을 결정하는 단계는,
상기 차량의 속도를 기초로 제동 거리, 공주 거리 및 정지 거리를
산출하는 단계를 포함하며,
상기 차량에게 경고를 수행하는 단계는,

상기 차량의 위치에 따라 경고 수준을 조정하는
충돌 경고 방법.

[Fig. 1]

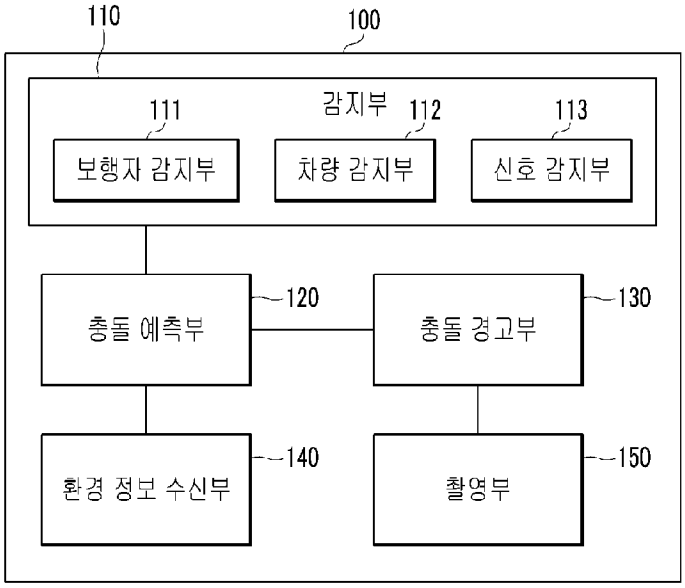
110
100
감지부
111
112
113
보행자 감지부
차량 감지부
신호 감지부
충돌 예측부
120
충돌 경고부
130
환경 정보 수신부
140
촬영부
150

[Fig. 2]

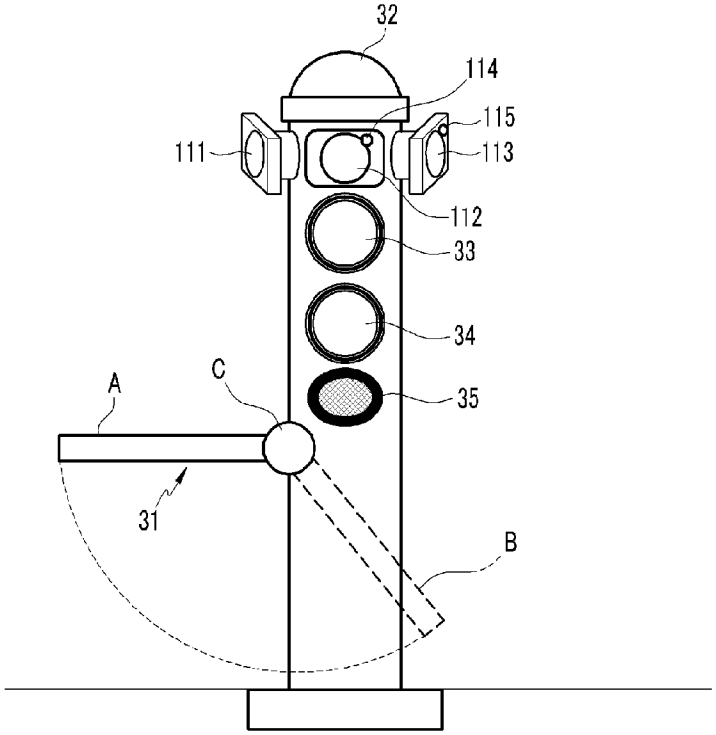
32
114
115
111
113
112
33
34
35
A
C
31
B

[Fig. 3]

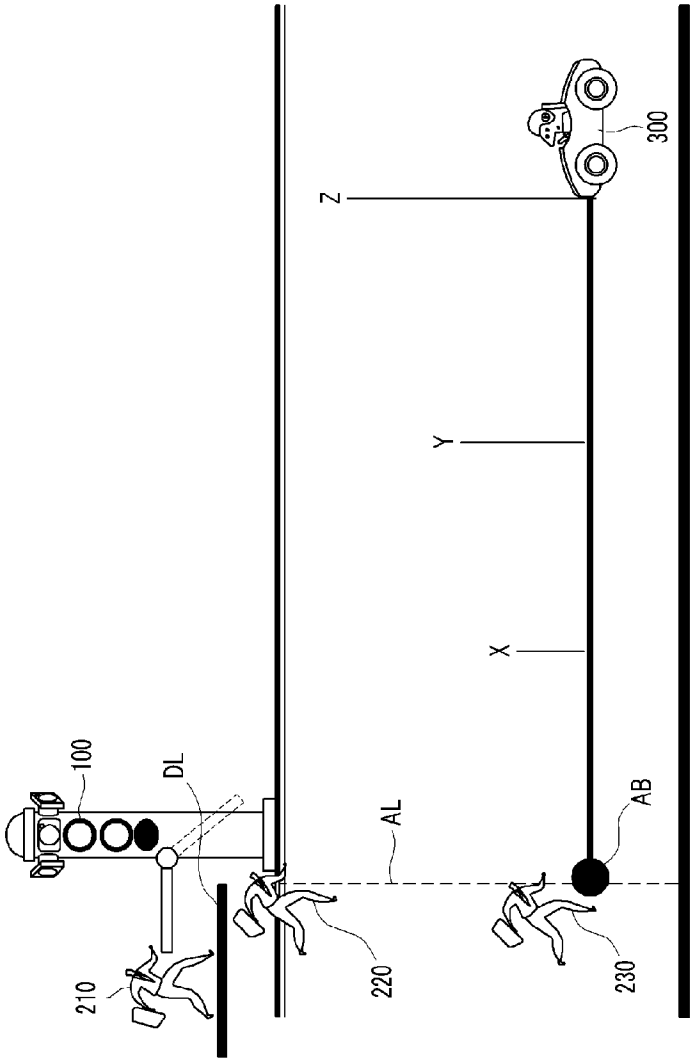
100
DL
210
220
AL
Z
Y
X
AB
230
300

[Fig. 4]

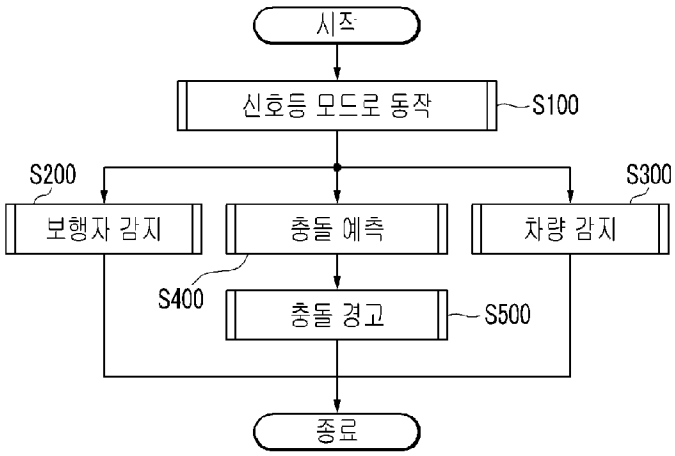
시작
신호등 모드로 동작
S100
S200
보행자 감지
충돌 예측
차량 감지
S300
S400
충돌 경고
S500
종료

[Fig. 5]

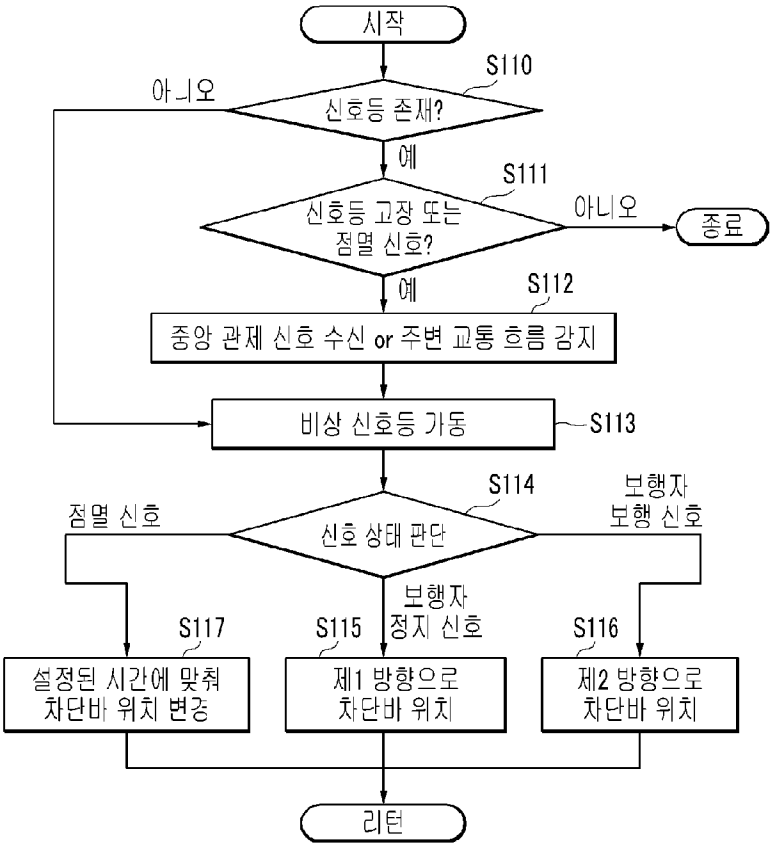
시작
S110
신호등 존재?
아니오
예
S111
신호등 고장 또는 점멸 신호?
아니오
종료
예
S112
중앙 관제 신호 수신 or 주변 교통 흐름 감지
비상 신호등 가동
S113
S114
신호 상태 판단
점멸 신호
보행자 보행 신호
보행자 정지 신호
S117
S115
S116
설정된 시간에 맞춰 차단바 위치 변경
제1 방향으로 차단바 위치
제2 방향으로 차단바 위치
리턴

[Fig. 6]

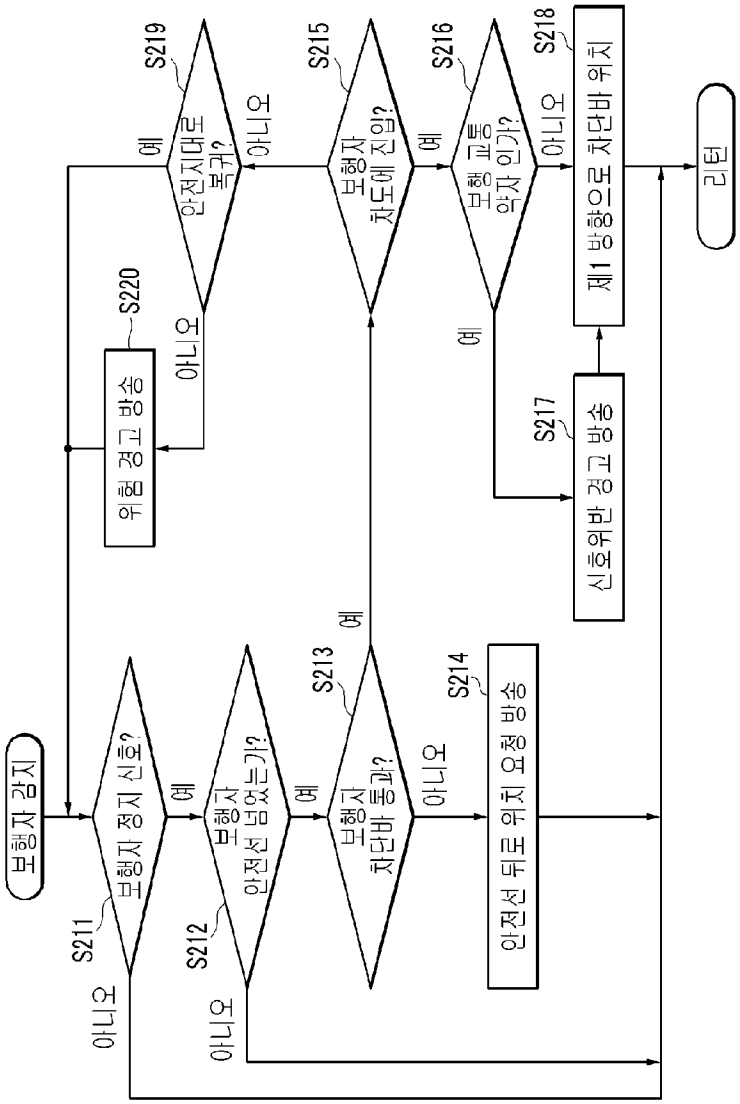
보행자 감지
S211
보행자 정지 신호?
예
아니오
S212
보행자 안전선 넘었는가?
예
아니오
S213
보행자 차단바 통과?
예
아니오
S214
안전선 뒤로 위치 요청 방송
S215
보행자 차도에 진입?
예
아니오
S216
보행 교통 약자 인가?
예
아니오
S217
신호위반 경고 방송
S218
제1 방향으로 차단바 위치
S219
안전지대로 복귀?
예
아니오
S220
위험 경고 방송
리턴

[Fig. 7]

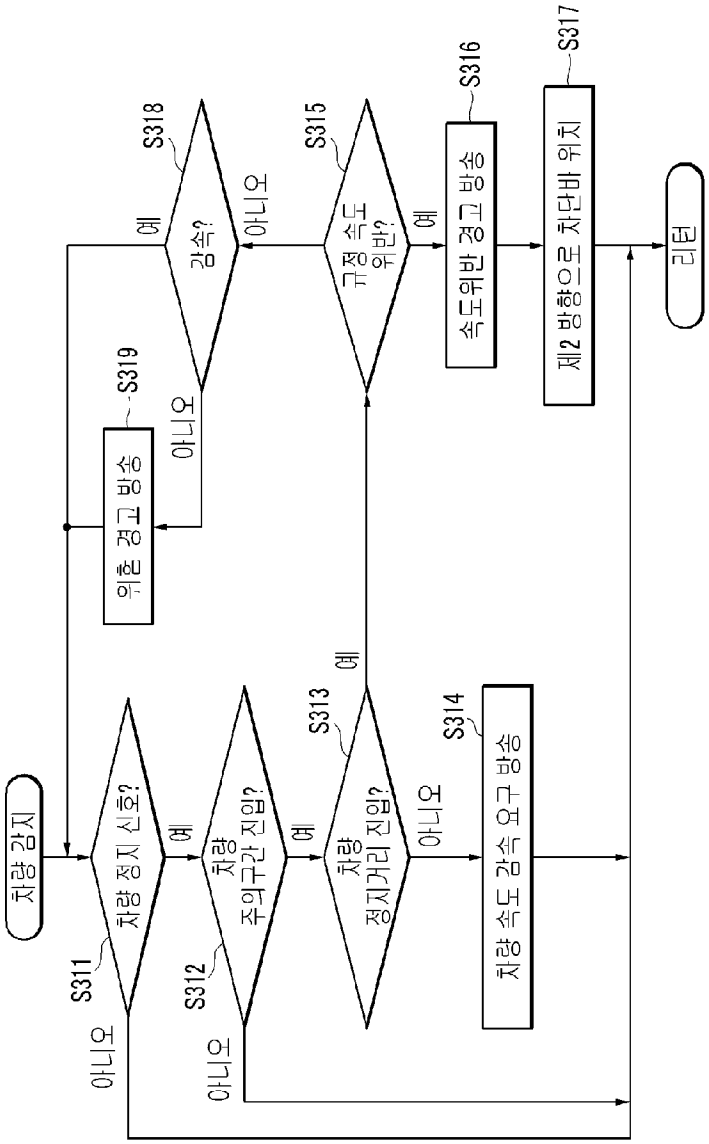
차량 감지
차량 정지 신호?
S311
예
아니오
차량 주의구간 진입?
S312
예
아니오
차량 정지거리 진입?
S313
예
아니오
차량 속도 감속 요구 방송
S314
감속?
S318
예
아니오
위험 경고 방송
S319
아니오
규정 속도 위반?
S315
예
속도위반 경고 방송
S316
제2 방향으로 차단바 위치
S317
리턴

[Fig. 8]

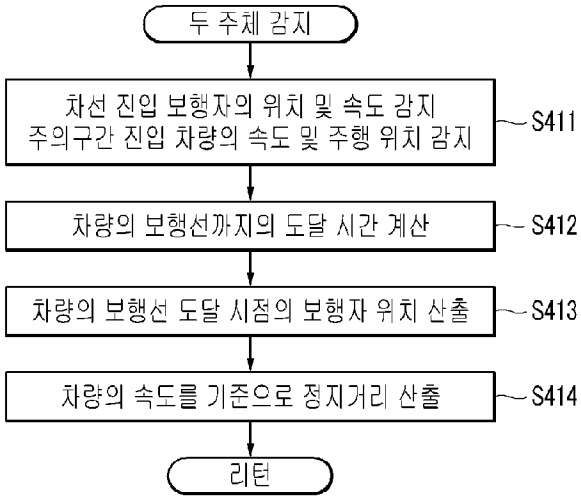
두 주체 감지
차선 진입 보행자의 위치 및 속도 감지
주의구간 진입 차량의 속도 및 주행 위치 감지
S411
차량의 보행선까지의 도달 시간 계산
S412
차량의 보행선 도달 시점의 보행자 위치 산출
S413
차량의 속도를 기준으로 정지거리 산출
S414
리턴

INTERNATIONAL SEARCH REPORT

International application No.
PCT/KR2013/009090

A. CLASSIFICATION OF SUBJECT MATTER

G08G 1/16(2006.01)i

According to International Patent Classification (IPC) or to both national classification and IPC

B. FIELDS SEARCHED

Minimum documentation searched (classification system followed by classification symbols)

G08G 1/16; G08G 1/005; B60R 21/00; G08G 1/0968

Documentation searched other than minimum documentation to the extent that such documents are included in the fields searched
Korean Utility models and applications for Utility models: IPC as above
Japanese Utility models and applications for Utility models: IPC as above

Electronic data base consulted during the international search (name of data base and, where practicable, search terms used)

eKOMPASS (KIPO internal) & Keywords: collision, prevention, pedestrian

C. DOCUMENTS CONSIDERED TO BE RELEVANT

Category*	Citation of document, with indication, where appropriate, of the relevant passages	Relevant to claim No.
Y	KR 10-2001-0105342 A (HALL, Brett) 28 November 2001 See pages 6, 8 and 15 and figures 1-12.	1-20
Y	KR 10-2011-0097091 A (MANDO CORPORATION) 31 August 2011 See paragraphs [0029]-[0045] and figures 2, 4.	1-20
A	JP 2011-123713 A (STANLEY ELECTRIC CO., LTD.) 23 June 2011 See abstract, claims 1-5 and figures 1-13.	1-20
A	US 2008-0243389 A1 (INOUE et al.) 02 October 2008 See abstract, paragraphs [0068]-[0070] and figure 15.	1-20
A	JP 2008-191815 A (MAZDA MOTOR CORP.) 21 August 2008 See abstract, claims 1-8 and figures 2, 5.	1-20

☐ Further documents are listed in the continuation of Box C. ☒ See patent family annex.

* Special categories of cited documents:
"A" document defining the general state of the art which is not considered to be of particular relevance
"E" earlier application or patent but published on or after the international filing date
"L" document which may throw doubts on priority claim(s) or which is cited to establish the publication date of another citation or other special reason (as specified)
"O" document referring to an oral disclosure, use, exhibition or other means
"P" document published prior to the international filing date but later than the priority date claimed
"T" later document published after the international filing date or priority date and not in conflict with the application but cited to understand the principle or theory underlying the invention
"X" document of particular relevance; the claimed invention cannot be considered novel or cannot be considered to involve an inventive step when the document is taken alone
"Y" document of particular relevance; the claimed invention cannot be considered to involve an inventive step when the document is combined with one or more other such documents, such combination being obvious to a person skilled in the art
"&" document member of the same patent family

Date of the actual completion of the international search	Date of mailing of the international search report
22 JANUARY 2014 (22.01.2014)	**22 JANUARY 2014 (22.01.2014)**
Name and mailing address of the ISA/KR Korean Intellectual Property Office Government Complex-Daejeon, 189 Seonsa-ro, Daejeon 302-701, Republic of Korea Facsimile No. 82-42-472-7140	Authorized officer Telephone No.

Patent document cited in search report	Publication date	Patent family member	Publication date
KR 10-2001-0105342 A	28/11/2001	KR 10-0712439 B1	02/05/2007
KR 10-2011-0097091 A	31/08/2011	NONE	
JP 2011-123713 A	23/06/2011	NONE	
US 2008-0243389 A1	02/10/2008	EP 1975903 A2 JP 2008-242544 A	01/10/2008 09/10/2008
JP 2008-191815 A	21/08/2008	NONE	

국제조사보고서

국제출원번호
PCT/KR2013/009090

A. 발명이 속하는 기술분류(국제특허분류(IPC))

G08G 1/16(2006.01)i

B. 조사된 분야

조사된 최소문헌(국제특허분류를 기재)

G08G 1/16; G08G 1/005; B60R 21/00; G08G 1/0968

조사된 기술분야에 속하는 최소문헌 이외의 문헌

한국등록실용신안공보 및 한국공개실용신안공보: 조사된 최소문헌란에 기재된 IPC
일본등록실용신안공보 및 일본공개실용신안공보: 조사된 최소문헌란에 기재된 IPC

국제조사에 이용된 전산 데이터베이스(데이터베이스의 명칭 및 검색어(해당하는 경우))

eKOMPASS(특허청 내부 검색시스템) & 키워드: 충돌, 방지, 보행자

C. 관련 문헌

카테고리*	인용문헌명 및 관련 구절(해당하는 경우)의 기재	관련 청구항
Y	KR 10-2001-0105342 A (홀 브레트) 2001.11.28 페이지 6, 8, 15 및 도면 1-12 참조.	1-20
Y	KR 10-2011-0097091 A (주식회사 만도) 2011.08.31 문단부호 [0029]-[0045] 및 도면 2, 4 참조.	1-20
A	JP 2011-123713 A (STANLEY ELECTRIC CO., LTD.) 2011.06.23 요약, 청구항 1-5 및 도면 1-13 참조.	1-20
A	US 2008-0243389 A1 (INOUE et al.) 2008.10.02 요약, 문단부호 [0068]-[0070] 및 도면 15 참조.	1-20
A	JP 2008-191815 A (MAZDA MOTOR CORP.) 2008.08.21 요약, 청구항 1-8 및 도면 2, 5 참조.	1-20

☐ 추가 문헌이 C(계속)에 기재되어 있습니다.

☒ 대응특허에 관한 별지를 참조하십시오.

* 인용된 문헌의 특별 카테고리:

"A" 특별히 관련이 없는 것으로 보이는 일반적인 기술수준을 정의한 문헌

"E" 국제출원일보다 빠른 출원일 또는 우선일을 가지나 국제출원일 이후에 공개된 선출원 또는 특허 문헌

"L" 우선권 주장에 의문을 제기하는 문헌 또는 다른 인용문헌의 공개일 또는 다른 특별한 이유(이유를 명시)를 밝히기 위하여 인용된 문헌

"O" 구두 개시, 사용, 전시 또는 기타 수단을 언급하고 있는 문헌

"P" 우선일 이후에 공개되었으나 국제출원일 이전에 공개된 문헌

"T" 국제출원일 또는 우선일 후에 공개된 문헌으로, 출원과 상충하지 않으며 발명의 기초가 되는 원리나 이론을 이해하기 위해 인용된 문헌

"X" 특별한 관련이 있는 문헌. 해당 문헌 하나만으로 청구된 발명의 신규성 또는 진보성이 없는 것으로 본다.

"Y" 특별한 관련이 있는 문헌. 해당 문헌이 하나 이상의 다른 문헌과 조합하는 경우로 그 조합이 당업자에게 자명한 경우 청구된 발명은 진보성이 없는 것으로 본다.

"&" 동일한 대응특허문헌에 속하는 문헌

국제조사의 실제 완료일	국제조사보고서 발송일
2014년 01월 22일 (22.01.2014)	2014년 01월 22일 (22.01.2014)

ISA/KR의 명칭 및 우편주소
대한민국 특허청
(302-701) 대전광역시 서구 청사로 189, 4동 (둔산동, 정부대전청사)
팩스 번호 +82-42-472-7140

심사관
강성철
전화번호 +82-42-481-8405

국제조사보고서
대응특허에 관한 정보

국제출원번호
PCT/KR2013/009090

국제조사보고서에서 인용된 특허문헌	공개일	대응특허문헌	공개일
KR 10-2001-0105342 A	2001/11/28	KR 10-0712439 B1	2007/05/02
KR 10-2011-0097091 A	2011/08/31	없음	
JP 2011-123713 A	2011/06/23	없음	
US 2008-0243389 A1	2008/10/02	EP 1975903 A2 JP 2008-242544 A	2008/10/01 2008/10/09
JP 2008-191815 A	2008/08/21	없음	

(12) INTERNATIONAL APPLICATION PUBLISHED UNDER THE PATENT COOPERATION TREATY (PCT)

(19) World Intellectual Property Organization
International Bureau

(43) International Publication Date
1 May 2014 (01.05.2014)

WIPO | PCT

(10) International Publication Number
WO 2014/066721 A2

(51) International Patent Classification: *B01F 13/10* (2006.01)

(21) International Application Number: PCT/US2013/066744

(22) International Filing Date: 25 October 2013 (25.10.2013)

(25) Filing Language: English

(26) Publication Language: English

(30) Priority Data:
61/719,126 26 October 2012 (26.10.2012) US

(71) Applicant: **COSMETIC TECHNOLOGIES, LLC** [US/US]; 3841 Spanish Oaks Drive, West Bloomfield, MI 48323 (US).

(72) Inventors: **BARTHOLOMEW, Julie, R.**; 823 Smith Avenue, Birmingham, MI 48009 (US). **SCHENA, Michael**; 1148 Clear Creek Drive, Rochester Hills, MI 48306 (US).

(74) Agents: **PURSLEY, Kristen L.** et al.; The Dobrusin Law Firm, P.C., 29 W. Lawrence Street, Suite 210, Pontiac, MI 48342 (US).

(81) Designated States *(unless otherwise indicated, for every kind of national protection available)*: AE, AG, AL, AM, AO, AT, AU, AZ, BA, BB, BG, BH, BN, BR, BW, BY, BZ, CA, CH, CL, CN, CO, CR, CU, CZ, DE, DK, DM, DO, DZ, EC, EE, EG, ES, FI, GB, GD, GE, GH, GM, GT, HN, HR, HU, ID, IL, IN, IR, IS, JP, KE, KG, KN, KP, KR, KZ, LA, LC, LK, LR, LS, LT, LU, LY, MA, MD, ME, MG, MK, MN, MW, MX, MY, MZ, NA, NG, NI, NO, NZ, OM, PA, PE, PG, PH, PL, PT, QA, RO, RS, RU, RW, SA, SC, SD, SE, SG, SK, SL, SM, ST, SV, SY, TH, TJ, TM, TN, TR, TT, TZ, UA, UG, US, UZ, VC, VN, ZA, ZM, ZW.

(84) Designated States *(unless otherwise indicated, for every kind of regional protection available)*: ARIPO (BW, GH, GM, KE, LR, LS, MW, MZ, NA, RW, SD, SL, SZ, TZ, UG, ZM, ZW), Eurasian (AM, AZ, BY, KG, KZ, RU, TJ, TM), European (AL, AT, BE, BG, CH, CY, CZ, DE, DK, EE, ES, FI, FR, GB, GR, HR, HU, IE, IS, IT, LT, LU, LV, MC, MK, MT, NL, NO, PL, PT, RO, RS, SE, SI, SK, SM, TR), OAPI (BF, BJ, CF, CG, CI, CM, GA, GN, GQ, GW, KM, ML, MR, NE, SN, TD, TG).

Published:

— *without international search report and to be republished upon receipt of that report (Rule 48.2(g))*

(54) Title: A CUSTOMIZED DISPENSING DEVICE DELIVERY SYSTEM AND METHOD

Fig-1

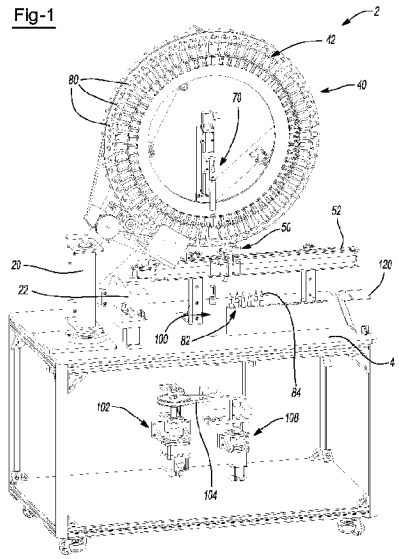

(57) Abstract: A device for producing a customized formulation comprising: a customized dispending device comprising: (a) a computer; (b) at least one robot arm; (c) a housing having at least one transparent panel; (d) at least one robot arm slide that the at least one robot arm is connected to for sliding along the inside of the housing; (e) a rotary wheel; (f) a plurality of ingredient containers connected to the rotary wheel; and (g) a package for ingredients to be dispensed into; wherein a radio frequency identification device (RFSD) is included in the package, on a label of the package, on the packaging for the package, or a combination thereof, wherein the package may be tracked during shipping, signal to a user when the package is delivered, connect to social media to post a message regarding the package, or a combination thereof.

WO 2014/066721 A2

A CUSTOMIZED DISPENSING DEVICE DELIVERY SYSTEM AND METHOD

FIELD

[0001] The present teachings relate to customized dispensing device and a customized delivery system for each customized product created by the dispensing device.

BACKGROUND

[0002] Currently, customized cosmetics may be produced that match the specific requirements of a user, match a color selected by a user, and/or the customized cosmetics are made on demand for the user at a retail location. Some of these customized formulations may be delivered to a user on site or to a remote location.

[0003] Examples of some customized cosmetic devices may be found in U.S. Patent Nos. 8,017,137; 8,186,872; 6,622,064; 6,779,686; 7,395,134; 7,099,740; and 6,412,658 all of which are expressly incorporated by reference in their entirety herein for all purposes. When customizing cosmetics, a user may want to order and buy the same customized product without having to remember specific volumes and types of ingredients the user utilized in creating the customized cosmetics. Additionally, a user may want to have an option of sharing information concerning his or her customized cosmetics with friends and family, on social networks and/or other websites. Further still, there may be a need for the customized dispensing device to offer a user further incentive to purchase customized cosmetics such as offering a socially conscious user an option to donate certain amount of money with every purchase to a charity or offer a retail owner, a manufacturer or supplier of the ingredients, or the like the option to donate certain percentage of proceeds to a charity on behalf of the customer.

[0004] Therefore, there is need for a customized cosmetics dispensing device system which will automatically detect a repeated customer and his or her choices of the customized cosmetics with an option to share the user's choices online, such as through social media, and which will promote social consciousness by allocating certain amount of customer's spending as a donation for a social cause. Further, there is a need to provide an easy, cost-effective, user-friendly way for the customized dispensing device to recognize a repeated customer and share information about the customer with the retail location, supplier, manufacturer, the like, or a combination thereof.

IPR2025-01034
Tesla EX1002 Page 1839

SUMMARY OF THE INVENTION

[0005] The present teachings address one or more of the above needs by providing a device for producing a customized formulation comprising: a customized dispending device comprising: (a) a computer; (b) at least one robot arm; (c) a housing having at least one transparent panel; (d) at least one robot arm slide that the at least one robot arm is connected to for sliding along the inside of the housing; (e) a rotary wheel; (f) a plurality of ingredient containers connected to the rotary wheel; and (g) a package for ingredients to be dispensed into; wherein a radio frequency identification device (RFID) is included in the package, on a label of the package, on the packaging for the package, or a combination thereof, wherein the package may be tracked during shipping, signal to a user when the package is delivered, connect to social media to post a message regarding the package, or a combination thereof.

[0006] In another aspect, the present teachings contemplates a method comprising: (a) shopping at a customized dispensing device; (b) making a purchase at the customized dispensing device; and (c) providing a unique code, a RFID as a tag, a RFID card, a RFID stick, or a combination thereof to a user, wherein the user will be recognized by a RFID reader included in the customized dispensing device by presenting the unique code, the RFID tag, the RFID card, the RFID stick, or a combination thereof to the RFID reader.

[0007] Preferably, the device includes a RFID reader in communication with the RFID, wherein the device can read the RFID from the package during a subsequent transaction so that the device can produce the same customized formulation. Preferably, the device is in communication with an outside charitable vendor. Preferably. the device sends a signal to an outside charitable vendor when each purchase is made. Preferably, the device donates a portion of each purchase to an outside charitable vendor. Preferably, the outside charitable vendor is a local soup kitchen, a food bank, a food rescue organization, a Meals on Wheels donation center, Gleaners Community Food Bank, Feeding America, the like, or a combination thereof. Preferably, the device is coupled to a handheld device, a social media outlet, e-mail, or a combination thereof, and when a donation is made, a delivery of proceeds from the donation is made, or both, the user is notified that the delivery has been performed. Preferably, shopping at the customized dispensing device includes a step of donating a portion of each purchase. Preferably, the RFID tag, the RFID card, the RFID stick, or a combination thereof connect to the user's handheld device, social media, e-mail, or a combination thereof, and when the donation is delivered to an outside charitable vendor, meals, food and/or clothes are delivered by the outside charitable vendor, or both, the user is notified of the delivery, the contents of the delivery, or both. Preferably, the customized dispensing device includes an output device.

IPR2025-01034
Tesla EX1002 Page 1840

Preferably, the output device displays a unique image that may be read by the user's handheld device so that the customized dispensing device can provide real time information to the user regarding the user's purchase, the donation made on behalf of the user, or a combination thereof. Preferably, the unique image links the user's purchase to the user's social media so that when an event occurs, the event in posted on the user's social media. Preferably, the unique image links to the user's handheld device, and the customized dispensing device can send text messages, e-mails, or both to the user to update the user regarding donations made on behalf of the user.

[0008] The present teachings provide a customized dispensing device delivery system and method of using the customized dispensing device which allows a user to choose, mix, and receive a customized cosmetic formulation while the device is capable of recognizing a repeated customer and his or her choices, preferences, and prior purchases, and further still allowing a user to contribute to social causes by allocating certain percentage of each purchase amount to be delivered to an outside charitable vendor. The advantage of offering customized products of the present invention is accomplished by offering a user a choice to combine ingredients supplied by the customized dispensing device through an interactive display, a RFID, a RFID enabled phone or tablet, an application, a website, or a combination thereof. The additional advantage of recognizing a repeated customer is accomplished by providing a user with a RFID which will receive signals from and send signals to a RFID reader incorporated in the customized dispensing device. The advantage of this feature of the present invention lies in allowing a user to reorder customized products without having to remember the type and amount of ingredients used and allowing a customer to order, pay, and contribute to social causes in a fast, convenient manner. An additional advantage of the present invention is that the RFID and RFID reader included in the customized dispensing device allows communication between the retail location, manufacturer, supplier of the ingredients, or the like, and the user, for example by sending personalized messages when new customized products are available, when a donation is utilized, or other information. Furthermore, the RFID reader may collect information concerning users, amount and type of ingredients used, and/or customized products created, or the like, and send this information to the retail location, manufacturer, supplier of the ingredients, or the like for cost-saving, fast, and efficient method of tracking ingredients and customized products.

IPR2025-01034
Tesla EX1002 Page 1841

BRIEF DESCRIPTION OF THE DRAWINGS

[0009] Fig. 1 illustrates a front view of a customized dispensing device as taught herein.

[0010] Fig. 2 illustrates a rear view of the customized dispensing device of Fig. 1.

[0011] Fig. 3 illustrates a side view of the customized dispensing device of Fig. 1.

[0012] Fig. 4 illustrates a top view of the customized dispensing device of Fig. 1.

[0013] Figs. 5A through 5D illustrate different examples of RFIDs taught herein to allow communication between the customized dispensing device and the user.

[0014] Fig. 6 illustrates one example of a custom dispensing device as taught herein.

DETAILED DESCRIPTION

[0015] The explanations and illustrations presented herein are intended to acquaint others skilled in the art with the teachings, its principles, and its practical application. Those skilled in the art may adapt and apply the teachings in its numerous forms, as may be best suited to the requirements of a particular use. Accordingly, the specific embodiments of the present teachings as set forth are not intended as being exhaustive or limiting of the teachings. The scope of the teachings should, therefore, be determined not with reference to the above description, but should instead be determined with reference to the appended claims, along with the full scope of equivalents to which such claims are entitled. The disclosures of all articles and references, including patent applications and publications, are incorporated by reference for all purposes. Other combinations are also possible as will be gleaned from the following claims, which are also hereby incorporated by reference into this written description.

[0016] The device as taught herein may include a housing, one or more transparent panels, a delivery window, an interactive display, a controller, a computer, a platform, a carrier support, a carrier, a carrier drive, a rotary wheel, rotational drive, vertical drive, one or more robot arms, one or more robot arm slides, one or more dispensing actuators, a plurality of ingredient containers, a plurality of packages, a plurality of caps, a packaging support, a RFID reader, a RFID, or a combination thereof.

[0017] The housing accommodates and protects the customized dispensing device as taught herein. The housing may accommodate and enclose a substantial portion of the components of the apparatus, such as one or more carriers, a dispensing mechanism, a control device, and/or other components of the device. Alternatively, one or more components may be located outside or otherwise attached to the housing. The housing may be made of one or more transparent

IPR2025-01034
Tesla EX1002 Page 1842

panels and one or more housing walls. Preferably, the housing is made of at least 5 transparent panels so that the device can be viewed from all angles. The housing may have one or more sides that are transparent. Preferably, about 50 percent or more, about 60 percent or more, about 70 percent or more, about 80 percent or more, or about 90 percent or more of the housing is transparent so that the customized dispensing device, and/or movement of a user's customized product being dispensed is visible. The housing may be suitably sized for any given application. For example, the housing may be sized to be mounted on a counter top or the like. Alternatively, the housing may comprise a standalone self-contained monolithic structure. It should be appreciated that smaller or larger configurations of each are available. However, preferably the housing is sized so as to receive two or more components, such as the plurality of the ingredient containers and one or more robotic arms, though other configurations are available. Additionally, the housing may include an interactive display for communication between the user and customized dispensing device through which a user may create or alter orders and through which a user may make his or her choices concerning a social cause. The housing also includes a delivery window through which a user retrieves ordered customized products, and/or a RFID.

[0018] The device may include an output device. The output device may be any piece of hardware equipment used to communicate results of data processing carried out by an information processing system such as a computer. The output device may be an input/output device. The output device may be a display device such as a screen, a monitor, a printer, n interactive display, the like, or a combination thereof. The output device may display a unique image that may be read by a user's handheld device so that the customized dispensing device can provide real time information to the user regarding the user's purchase, the donation made on behalf of the user, or a combination thereof. The unique image may link the user's purchase to the user's social media so that when an event occurs, the event in posted on the user's social media. The unique image may link to the user's handheld device, and the customized dispensing device can send text messages, e-mails, or both to the user to update the user regarding donations made on behalf of the user.

[0019] The device may contain a controller such as a computer. The computer may be any general purpose device that can be programmed to carry out a set of arithmetic or logical operations needed to operate the customized dispensing device. The computer assists in the operation of a variety of parts of the customized dispensing device, such a carrier, a carrier drive, a rotary wheel, a rotational drive, a vertical drive, one or more robot arms, one or more robot arm slides, one or more dispensing actuators, a plurality of ingredient containers, a

IPR2025-01034
Tesla EX1002 Page 1843

plurality of packages, a plurality of caps, a packaging support, a RFID reader, a RFID, the like, or a combination thereof.

[0020] The device may be connected to a platform so that the device and the platform can be transported to a retail location, a dispensing location, or both. The device may include a carrier support that is movably attached to the platform. The carrier support may slide along a track. Preferably, the carrier support is rotatable around an axis. The carrier support may be moved by a carrier drive that pushes the carrier support along a track and/or around the axis.

[0021] The carrier support supports a carrier. The carrier may have any size, shape, or a combination thereof so that it can carry carrying ports. For example, the carrier may be shaped as a rotary wheel. The carrier has one or more rows of carrying ports. The carrying ports may carry any material that may be used to make a custom cosmetic. Preferably, the carrier includes at least 3 rows of carrying ports. The carrying ports may carry ingredient containers, caps, packages, brushes, supplies, cloths, applicators, mixers, the like, or a combination thereof. The arrangement of the ingredient containers, caps, packages, brushes, supplies, cloths, applicators, mixers, the like, or a combination thereof on the carrier may vary between applications or otherwise. Suitable arrangements include patterns such as radially disposing or linearly disposing of the ingredient containers, caps, packages, brushes, supplies, cloths, applicators, mixers, the like, or a combination thereof onto the carrier. However, non-pattern arrangements are also contemplated. The carrying ports may exist on a common plane or on a plurality of planes. The carrying ports may be mounted at an angle with respect to the surface of the carrier. Other configurations are contemplated and within the scope of the present invention. The carrying ports may be aligned with the one or more robot arms, the dispensing actuator, the packaging support, or a combination thereof so that a package may be moved into the packaging support, ingredients may be dispensed into the packages, the ingredients in the packages may be mixed, or a combination thereof. The carrier may be moved around the axis of the carrier support so that each row of carrying ports aligns with a respective device so that a customized cosmetic may be created. Control of the drive motor (e.g., the rotation of the carrier) and the dispensing mechanism is achieved via a controller, which may or may not be located within or otherwise attached to the housing. A preferred controller comprises a computer or the like. Additional aspects of the teachings of a carrier can be gleaned from the teachings herein, including those of Column 3, lines 50 through Column 4, lines 23; Column 6, lines 62 through Column 7, lines 6 of Patent No. 8,186,872 incorporated by reference herein, which shows various alternative embodiments for a carrier. The carrier may be located adjacent to a robot arm.

IPR2025-01034
Tesla EX1002 Page 1844

[0022] The one or more robot arms provide movement along at least one axis. The one or more robot arms may be any robot arm that assists in creating a custom cosmetic. The one or more robot arms may be movable along one or more axis. The one or more robot arms may be movable around 2, 3, 4, 5, or even 6 axes. In addition to the one or more axis of movement of the one or more robot arms, the one or more robot arms may be adapted for rotational movement about the one or more of the one or more axis, thereby generating 2, 3, 4, 5, 6, 7, 8, 9, 10 or more degrees of freedom. The one or more robot arms may be programmable so that the ingredients can be situated randomly within the apparatus and the robot arm will be programmed to locate the proper location and/or cause dispensing from the ingredients containers. It should be appreciated that the one or more robot arms and the carrier are movable relative to one another. The one or more robot arms may assist in mixing. The one or more robot arms may hold a mixer stationary during mixing. The one or more robot arms may include an integral mixer. The one or more robot arms may slide along a robot arm slide so that the one or more robot arms may move along all or a portion of the platform. The one or more robot arms may be further configured for retrieval, placement, and removal of a package from a dispensing site of the dispensing apparatus. The robot arm may be further configured for replacement of the ingredient containers on the carrier upon substantial expiration of the contents located therein. The robot arm may be configured with corresponding grasping means for removal, attachment, and manipulation of an ingredient container, package, or otherwise. The one or more robot arms are configured to withdraw (via vacuum, suction, or otherwise) one or more ingredients from an ingredient container and expel the one or more ingredients into a package. Accordingly, the robot arm may also carry one or more needles, ladles, aspirating tubes, or other suitable devices that can be dipped into the one or more ingredient containers and withdraw ingredients. As such, it should also be appreciated that the dispensing device may further include a purging or cleaning device for cleaning needles, ladles, aspirating tubes, or other suitable devices, which is particularly advantageous when one device is used to withdraw contents from more than one ingredient container. In another aspect, the one or more robot arms are configured to actuate expulsion of the one or more ingredients through an orifice of the one or more ingredient containers. Accordingly, the one or more robot arms may apply a force to cause the one or more containers to expel one or more ingredients. In yet another aspect, the one or more robot arms are configured to retrieve one or more ingredient containers and move the one or more ingredient containers to a dispensing location for dispending into a package and subsequently place the one or more ingredient containers back to their original positions. Other configurations are contemplated and within the scope of the present invention. The one or

more ingredient containers and the one or more robotic arms of the dispensing apparatus may be movably mounted with respect to one another. It should also be appreciated that plural robot arms may be employed, such as one for retrieving one or more ingredient containers and another for causing ingredients to be removed from the one or more containers. Additional aspects of the teachings of a robot arm and robot arm slide can be gleaned from the teachings herein, including those of Column 3, lines 65 through Column 5, lines 57; Column 9, line 9 through Column 15, lines 35; and Column 21, line 5 through Column 24, line 22; and Figures 1A-1C; 3A-3F; 4A-5E; and 9A-9B of Patent No. 8,186,872 incorporated by reference herein, which shows various alternative embodiments for a robot arm.

[0023] A dispensing actuator may assist in dispensing of one or more ingredients from one or more ingredient containers. The dispensing actuator may be a vacuum, an actuator that pushes the ingredients out of the one or more ingredient containers, a ladle, a spoon, the like, or a combination thereof. The dispensing actuator may be magnetic, having at least one magnet adapted for moving an actuatable member contained within an ingredient container. The dispensing actuator may have any size, shape, form, or a combination thereof, such as a shape adapted for movement along at least one axis, for applying force against a plunger portion of an ingredient container, for carrying a package, or a combination thereof. The dispensing actuator may be adapted for vertical movement, horizontal movement, or both. The dispensing actuator may be electronically controlled or controlled by a suitable controller, which preferably includes a programmable logic control. The dispensing actuator may be located proximate to the one or more robot arms. The dispensing actuator may be a part of a mixer device. The dispensing actuator may be operably associated with a holder of the mixer device so that the actuatable member contained within the container, when held by the holder, positions the actuatable member in magnetic communication with the magnetic actuator for actuation of the actuatable member by the actuator. The dispensing actuator may include a volumetric servo system for movement of a plunger of an ingredient container. The dispensing actuator may further include a gripper portion adapted to hold a package for receiving ingredients from the one or more ingredient containers. Preferably, the gripper portion is located below the servo system and below nozzles of the one or more ingredient containers. The gripper portion may also be vertically movable for facilitating movement of the package, such as movement of the package to a mixer. Additional aspects of the teachings of a dispensing apparatus can be gleaned from the teachings herein, including those of Column 3, line 5 through Column 3, lines 28; Column 8, line 47 through Column 8, lines 62; Column 9, line 20 through Column 25, line 27; and Figures 2-3, 4A-8B, and 11A-14 of Patent No. 8,186,872 incorporated by reference herein, which shows

IPR2025-01034
Tesla EX1002 Page 1846

various alternative embodiments for a customized dispensing device.

[0024] The one or more ingredient containers may be any containers that hold and dispense an ingredient. The one or more ingredient containers can have any size, shape, form, or a combination thereof. The device contains at least one container. The arrangement of the one or more ingredient containers on the carrier may vary between applications or otherwise. Suitable arrangements include patterns such as radially disposing or linearly disposing of the one or more ingredient containers onto the carrier. However, non-pattern arrangements are also contemplated. The one or more ingredient containers may exist on a common plane or on a plurality of planes. Also, the one or more ingredient containers may be mounted on an angle with respect to the surface of the carrier. Other configurations are contemplated and within the scope of the present invention. The one or more ingredient containers may have an open top so that ingredients may be removed from the one or more ingredient containers. Preferably, the one or more ingredient containers may be syringe, actuatable devices, devices that include a funnel, or a combination thereof. The one or more ingredient containers mounted to the carrier are preferably replaceable upon substantial expiration of the contents inside or otherwise. As such, preferably, the mounting means for the one or more ingredient containers allow for subsequent removal of the one or more ingredient containers for replacement. Replacement of the one or more ingredient containers may be performed by a technician or automated, as described herein. As such, it is further contemplated that the one or more ingredient containers, the carrier, the dispensing mechanism, or otherwise include a sensor for monitoring the amount of ingredients remaining in one or more, and preferably all, of the ingredient containers. Suitable sensors include position sensors, weight sensors, pressure sensors, any combination thereof, or otherwise. Additionally, the one or more ingredient containers may be any containers that assist in mixing a cosmetic. The one or more ingredient containers may include caps. The caps may assist in mixing. The caps may include a mixing device. The mixing device may be a spring. The caps may be gripped by the one or more robot arms and a packaging support may rotate, move up and down, or both so that the mixing device held by the one or more robot arms mixes the contents of the packaging. The packaging support may be any structure supporting the packaging. The packaging support may be movable up and down by a rotation drive. The packaging support may be rotated by a rotational drive. The vertical drive and rotational drive may be any device that moves the packaging support. The drives may be a servo motor, a stepping motor, a brushless motor, or a combination thereof. The drives may be a direct drive, an indirect drive (e.g., belt driven), or a combination thereof. Additional aspects of the teachings of one or more ingredient containers can be gleaned from the teachings herein, including those

of Column 3, lines 53 through Column 4, line 23; Column 5, line 19 through Column 7, line 58 and Figures 2, 6, 7A-8B, and 11B - 14 of Patent No. 8,186,872 incorporated by reference herein, which shows various alternative embodiments for an ingredient container.

[0025] The ingredients of the one or more ingredient containers are preferably adapted to be mixed together to form a customized product. The ingredients may be dispensed into one or more ingredient containers. The customized product may be liquid, liquid-powder based, or powder in form. Advantageously, in one example, the customized product includes a cosmetic product. Such cosmetic product may include, but is not limited thereto: lipstick, eye shadow, lip gloss, foundation, lip liner, nail polish, blush, eye shadow, mascara, body lotion, face powder, or otherwise. As such, it should be appreciated that the packages receiving the mixture of ingredients comprise packages typically used for storing such cosmetics (e.g., nail polish container, lip gloss container, or otherwise). Likewise, it should be appreciated that the one or more ingredient containers may include one or more applicators for applying the same. Other ingredients that may be stored and dispensed from the ingredient containers include gloss, glitter, tints, sparkles, or other effects that may be advantageous with a cosmetic, or other customized product.

[0026] The device may include a storage box so that finished customized products may be placed in the storage box to await users of the customized dispensing device to pick their packages, to await delivery, or both. The packages may be delivered through a delivery window in the housing directly to a user, to a delivery person, or both.

[0027] The device may include a RFID which serves as an information retrieval device. The RFID may be placed on the packaging, in the packaging, provided to a user, provided as a stick, such as MX Stick™, provided as a tag, such as MX Tag™, a card, such as MX Card™, enabled with a mobile phone, a tablet, a pass, such as an RIFD VIP Pass allowing access to a variety of events, promotions, and social media opportunities, an RFID technology embedded within a piece of accessory such as a bracelet, or a combination thereof. The RFID may be included in a tester, in a mirror (which may or may not be directly connected to or associated with the device), a window (e.g., a storefront window), a bracelet, a card (e.g., a credit card, a frequent shopper card or the like), a key fob, and RFID-enabled mobile device or any item that can be tagged with RFID. The device may both transmit and receive RFID information. The device may receive RFID data so that a specific product is created. The device may then transmit information (possibly via RFID) regarding the product and/or the customer purchasing the product to one or more destinations including mobile device, social networking platforms, corporate databases, non-profit partners, and the customer and/or any customer-selected network. The RFID

receives and sends a signal from and to an RFID reader housed in the customized dispensing device. The RFID reader identifies each RFID as an object with a unique number which is connected to one or more purchases from the customized dispensing device. For example, a user may purchase a customized product and when the user purchases a customized product, the user may be provided with an RFID. The RIFD may be included in the package, on a label of the package, on the packaging for the package, or a combination thereof. Next time a user approaches a customized dispensing device with the RFID and presents the RFID in front of the RFID reader, such as waves the RFID near the RFID reader, the RFID reader within the customized dispensing device retrieves the user's data including recipes of prior purchases and/or other information. Therefore, the customized dispensing device can produce the same customized formulation during a subsequent transaction. Once in the possession of the user, the RFID may be used to recall past orders from a user, to place new orders, to maintain a user's wish list, to make a payment, to order online, to request delivery, to track information relating to the health, other attributes of the user, to share information, or otherwise. For example, the RFID may be configured to store information relating to the amount of products purchased, consumed, or otherwise dispensed from the dispensing apparatus of the present invention. The RFID may further be configured to store, record and/or monitor information relating to a user's diet, weight, cholesterol, blood sugar, or other levels or parameters related to the health of the user or otherwise. The RFID may still further be configured to make recommendations of ingredients to be dispensed from the dispensing apparatus based upon stored information in the RFID, which optionally is related to the user. The RFID and RFID reader may also gather and provide information regarding the user, and his or her orders, and/or demographic information related to the user to the retail location, ingredient manufacturer, supplier, and the like; advertise; send promotions; send product and/or other information to the user via messages such as personalized messages on Facebook® and other social networks. The RFID and RFID reader may also monitor inventory, maintenance, sales, and funds transferred to social causes and provide such information to retail partners, ingredient manufacturer, supplier, and the like, in real-time to provide an efficient cost-saving method of tracking ingredients and products. The RFID may enable a wireless device, such as a tablet or a smart phone, to work with the wireless device so that the user may receive content from the customized dispensing device regarding an order or a social program in conjunction with the customized dispensing device. For example, a user may create and order a product using the customized dispensing device's interactive display, an RFID enabled phone or tablet, an application, a website, or a combination thereof. A user may also use the RFID to set up a link

IPR2025-01034
Tesla EX1002 Page 1849

with the user's wireless device, social media, or some other network and the customized dispensing device. The RIFD may be used to raise social awareness and social consciousness. For example, the customized dispensing device may be in communication with and donate a portion of the user's purchase to an outside charitable vendor such as a local, national, or international charitable organization, a local soup kitchen, a food bank, a food rescue organization, a Meals on Wheels donation center, Gleaners Community Food Bank, Feeding America, the like, or a combination thereof. The customized dispensing device may send a signal to the outside charitable vendor when each purchase is made. The customized dispensing device, the RFID tag, the RFID card, the RFID stick, or a combination thereof may be coupled to and/or connect to the customer's handheld device, social media, e-mail, or a combination thereof, and the user may be notified that the delivery has been performed when a donation is made, a delivery of proceeds from the donation is made, or both. For example, the donation from the customized dispensing device on behalf of the user may be trackable via the RFID so that the user is alerted when and how the user's payment is being used in a socially conscious manner, for example, a user may receive a real-time text notification when meals, food, clothes, the like, or a combination thereof are delivered through Feeding America or another outside charitable vendor, about the contents of the delivery, or both on the user's behalf. Thus, in another example, a donation may be made by the customized dispensing device and/or the retail location to an outside charitable organization and the unique RFID provided to the user may enable a link to be generated with a Facebook® page, Twitter® account, other social media, a network, or a combination thereof so that a user is alerted when the proceeds are delivered to the charitable organization and/or the donation is made by the charitable organization. In yet another example, the user may receive a text message or an e-mail regarding the donation. Preferably, the messages are real-time so that when the donation is made, the user is instantly updated so that the user experiences their personal impart in real-time. Additionally, the RFID may provide demographic information to a social media outlet so that a user's friends and family know the current trends regarding the user, a collective area, a specific cosmetic, or a combination thereof. The RFID may store information regarding a user's donation, recall this information when a user makes another order through the customized dispensing device, offer the same charitable target to the user, or allow the user to seek alternative donation targets based on user's preference.

[0028] The method for utilizing the invention may include one or more of the following steps, and the steps may be performed in virtually any order. Providing at a retail store a point-of-sale custom formulation dispensing apparatus, including a plurality of ingredients containers.

Providing a user interface for enabling a customer to select a custom formulation and a housing that contains one or more of the following: one or more transparent panels, a delivery window, an interactive display, a computer, a platform, a carrier support, a carrier, a carrier drive, a rotary wheel, rotational drive, vertical drive, one or more robot arms, one or more robot arm slides, one or more dispensing actuators, a plurality of ingredient containers, a plurality of packages, a plurality of caps, a packaging support, a RFID reader, a RFID, or a combination thereof. Dispensing one or more ingredients into at least one ingredient container. Locating the ingredient container at a mixing location using an automated computer control locating mechanism. Mixing the dispensed ingredients. Placing an RFID on the packaging, in the packaging, on a label of the package, on the packaging for the package, or a combination thereof. Providing an RFID to a user as a stick, such as MX Stick™, as a tag, such as MX Tag™, a card, such as MX Card™, enabling RFID with a mobile phone, a tablet, a pass, such as an RIFD VIP Pass allowing access to a variety of events, promotions, and social media opportunities, embedding an RFID technology within a piece of accessory such as a bracelet, or a combination thereof. Shopping at a customized dispensing device. Making a purchase at the customized dispensing device. Creating and ordering a product using the customized dispensing device's interactive display, an RFID enabled phone or tablet, an application, a website, or a combination thereof. Providing a unique code, a RFID tag, a RFID card, a RFID stick, the like, or a combination thereof to a user, wherein the user will be recognized by a RFID reader included in the customized dispensing device by presenting the unique code, the RFID tag, the RFID card, the RFID stick, the like, or a combination thereof to the RFID reader. Using the RFID to recall past orders from a user, placing new orders, maintaining a user's wish list, making a payment, ordering online, requesting delivery, tracking information relating to the health, other attributes of the user, sharing information, or otherwise. Using the RFID to store information relating to the amount of products purchased, consumed, or otherwise dispensed from the dispensing apparatus of the present invention. Using the RFID to store, record and/or monitor information relating to a user's diet, weight, cholesterol, blood sugar, or other levels or parameters related to the health of the user or otherwise. Using the RFID to make recommendations of ingredients to be dispensed from the dispensing apparatus based upon stored information in the RFID, which optionally is related to the user. Using the RFID and RFID reader to gather and provide information regarding the user, and his or her orders, and/or demographic information related to the user to the retail location, ingredient manufacturer, supplier, and the like; to advertise; to send promotions; to send product and/or other information to the user via messages such as personalized messages on Facebook® and other social

IPR2025-01034
Tesla EX1002 Page 1851

networks; to monitor inventory, maintenance, sales, and funds transferred to social causes and provide such information to retail partners, ingredient manufacturer, supplier, and the like, in real-time to provide an efficient cost-saving method of tracking ingredients and products. Enabling with a RFID a wireless device, such as a tablet or a smart phone, to work with the customized dispensing device so that the user may receive content from the customized dispensing device regarding an order or a social program in conjunction with the customized dispensing device. Using a RFID to set up a link with the user's wireless device, social media, or some other network and the customized dispensing device. Using a RIFD to raise social awareness and social consciousness. Using a RFID to communicate and donate a portion of the user's purchase to an outside charitable vendor such as a local, national, or international charitable organization, a local soup kitchen, a food bank, a food rescue organization, a Meals on Wheels donation center, Gleaners Community Food Bank, Feeding America, the like, or a combination thereof. Using the customized dispensing device to send a signal to the outside charitable vendor when each purchase is made. Donating a portion of each purchase using the RFID. Choosing a charitable target of the donation. Using the customized dispensing device, the RFID tag, the RFID card, the RFID stick, or a combination to be coupled to and/or connect to the customer's handheld device, social media, e-mail, or a combination thereof. Notifying a user that the delivery has been performed when a donation is made, a delivery of proceeds from the donation is made, or both. Tracking the donation via the RFID so that the user is alerted when and how the user's payment is being used in a socially conscious manner. Sending and receiving a real-time text notification when meals, food, clothes, the like, or a combination thereof are delivered through Feeding America or another outside charitable vendor, about the contents of the delivery, or both on the user's behalf. Making a donation by the customized dispensing device and/or the retail location to an outside charitable organization, providing the unique RFID to the user, using the RFID to enable a link to be generated with a Facebook® page, Twitter® account, other social media, a network, or a combination thereof so that a user is alerted when the proceeds are delivered to the charitable organization and/or the donation is made by the charitable organization. Updating a user about the charitable target of the donation. Using the RFID may to provide demographic information to a social media outlet so that a user's friends and family know the current trends regarding the user, a collective area, a specific cosmetic, or a combination thereof. Using the RFID to store information regarding a user's donation, recalling this information when a user makes another order through the customized dispensing device, offering the same charitable target to the user, or allowing the user to seek alternative charitable targets based on user's preference.

[0029] Figure 1 illustrates a front view of a customized dispensing device 2 as taught herein. The customized dispensing device 2 is connected to a platform 4 via a carrier support 20. The carrier support 20 is moved by a carrier drive 22. The carrier support 20 moves the carrier 40 with carrying ports 42 that include a plurality of ingredient containers 80. The carrier 40 rotates until the ingredient containers 80 are aligned with a dispensing actuator 70 that assists in dispensing ingredients. A robot arm 50 moves along a robot arm slide 52 so that the robot arm 50 picks up packages 82 so that ingredients are dispensed into the packages 82 from the ingredient containers 80. The robot arm 50 places each package 82 into a packaging support 100 that is located below the dispensing actuator 70. The packaging support 100 is connected to a rotational drive 102 and a vertical drive 108. The rotational drive 102 includes a belt 104 that connects to the packaging support 100 and rotates the packaging support 100 so that when ingredients are placed in the package, the ingredients are mixed. The vertical drive 104 moves the packaging support 100 vertically so that a mixer that is held by the robot arm 50 can be used to mix the ingredients in the package 82 when the packaging support 100 moves up and down. Once a cap 84 is attached to the package 82, and the package is complete, the robot arm 50 delivers the package 82 to the consumer through the delivery window 120.

[0030] Figure 2 illustrates a rear view of the customized dispensing device 2 of Fig. 1. The carrier support 20 includes an axis 24 that the carrier support 20 rotates around. During operation, the carrier drive 22 pushes against one of the carrier supports 20 and the carrier support 20 and the carrier 40 rotates around the axis 24 so that the ingredient containers 80, caps 84, and packages 82 align with the robot arm 50, the packaging support 100, and/or the dispensing actuator 70. Once the carrier 40 is aligned with one of the robot arm 50, the packaging support 100, or the dispensing actuator 70, the carrier drive 42 moves the carrier 40 so that the respective package 82, cap 84, or ingredient container 80 is aligned so that the package 82, cap 84, or ingredient container 80 can be transferred into a working relationship with one of the robot arms 50, the packaging support 100, or the dispensing actuator 70.

[0031] Figure 3 illustrates a side view of the customized dispensing device 2 of Fig. 1. As illustrated, the carrier support 20 is moved by the carrier drive 22 in the direction 26 so that the contents of the carrier's 40 rotary wheel 45 moves forwards and backwards into alignment with the robot arm 50 and/or the packaging support 100. The carrier wheel 40 is rotated in the direction 44 by the carrier drive 22 so that an ingredient container 80, package 82, or cap 84 is aligned with the robot arm 50, packaging support 100, dispensing actuator 70, or a combination thereof.

[0032] Figure 4 illustrates a top view of the customized dispensing device of Fig. 1. As

illustrated, an ingredient container 80 is aligned with the packaging support 100 so that the dispensing actuator 70 can dispense an ingredient. Once a package 80 is complete, the package 80 may be stored in a storage box 118.

[0033] Figures 5A through 5D illustrate different examples of RFIDs 140 taught herein to allow communication between the customized dispensing device 2 and a user, a retail location, a supplier, a manufacturer, the like, or a combination thereof. Figure 5A illustrates an MX Stick, figure 5B illustrates an MX Pass, figure 5C illustrates a MX Tag, and figure 5D illustrates an accessory, a bracelet.

[0034] Figure 6 illustrates one example of a custom dispensing device 2 as taught herein. As illustrated, the customized dispensing device 2 includes a computer 115, an interactive display 130, and a RFID reader 150 located in such a way that the RFID reader 150 can automatically read an RIFD 140 (not depicted) when a user approaches the customized dispensing device 2.

[0035] Any numerical values recited herein include all values from the lower value to the upper value in increments of one unit provided that there is a separation of at least 2 units between any lower value and any higher value. As an example, if it is stated that the amount of a component or a value of a process variable such as, for example, temperature, pressure, time and the like is, for example, from 1 to 90, preferably from 20 to 80, more preferably from 30 to 70, it is intended that values such as 15 to 85, 22 to 68, 43 to 51, 30 to 32 etc. are expressly enumerated in this specification. For values which are less than one, one unit is considered to be 0.0001, 0.001, 0.01 or 0.1 as appropriate. These are only examples of what is specifically intended and all possible combinations of numerical values between the lowest value and the highest value enumerated are to be considered to be expressly stated in this application in a similar manner.

[0036] Unless otherwise stated, all ranges include both endpoints and all numbers between the endpoints. The use of "about" or "approximately" in connection with a range applies to both ends of the range. Thus, "about 20 to 30" is intended to cover "about 20 to about 30", inclusive of at least the specified endpoints.

[0037] The disclosures of all articles and references, including patent applications and publications, are incorporated by reference for all purposes. The term "consisting essentially of" to describe a combination shall include the elements, ingredients, components or steps identified, and such other elements ingredients, components or steps that do not materially affect the basic and novel characteristics of the combination. The use of the terms "comprising" or "including" to describe combinations of elements, ingredients, components or steps herein also contemplates embodiments that consist essentially of the elements, ingredients,

IPR2025-01034
Tesla EX1002 Page 1854

components or steps. By use of the term "may" herein, it is intended that any described attributes that "may" be included are optional.

[0038] Plural elements, ingredients, components or steps can be provided by a single integrated element, ingredient, component or step. Alternatively, a single integrated element, ingredient, component or step might be divided into separate plural elements, ingredients, components or steps. The disclosure of "a" or "one" to describe an element, ingredient, component or step is not intended to foreclose additional elements, ingredients, components or steps.

[0039] It is understood that the above description is intended to be illustrative and not restrictive. Many embodiments as well as many applications besides the examples provided will be apparent to those of skill in the art upon reading the above description. The scope of the teachings should, therefore, be determined not with reference to the above description, but should instead be determined with reference to the appended claims, along with the full scope of equivalents to which such claims are entitled. The disclosures of all articles and references, including patent applications and publications, are incorporated by reference for all purposes. The omission in the following claims of any aspect of subject matter that is disclosed herein is not a disclaimer of such subject matter, nor should it be regarded that the inventors did not consider such subject matter to be part of the disclosed inventive subject matter.

IPR2025-01034
Tesla EX1002 Page 1855

CLAIMS

I claim:

Claim 1: A device for producing a customized formulation comprising:

a customized dispending device comprising:

a computer;

at least one robot arm;

a housing having at least one transparent panel;

at least one robot arm slide that the at least one robot arm is connected to for sliding along the inside of the housing;

a rotary wheel;

a plurality of ingredient containers connected to the rotary wheel; and

a package for ingredients to be dispensed into;

wherein a radio frequency identification device (RFID) is included in the package, on a label of the package, on the packaging for the package, or a combination thereof,

wherein the package may be tracked during shipping, signal to a user when the package is delivered, connect to social media to post a message regarding the package, or a combination thereof.

Claim 2: The device of claim 1, wherein the device includes a RFID reader in communication with the RFID, and wherein the device can read the RFID from the package during a subsequent transaction so that the device can produce the same customized formulation or a formulation that is a modification of the previous customized formulation.

Claim 3: The device of any of the preceding claims, wherein the device is in communication with an outside charitable vendor.

Claim 4: The device of any of the preceding claims, wherein the device sends a signal to an outside charitable vendor when each purchase is made.

Claim 5: The device of any of the preceding claims, wherein the device donates a portion of each purchase to an outside charitable vendor.

IPR2025-01034
Tesla EX1002 Page 1856

Claim 6: The device of claims 3 through 5, wherein the outside charitable vendor is a local soup kitchen, a food bank, a food rescue organization, a Meals on Wheels donation center, Gleaners Community Food Bank, Feeding America, the like, or a combination thereof.

Claim 7: The device of any of the preceding claims, wherein the device is coupled to a handheld device, a social media outlet, e-mail, or a combination thereof, and

wherein when a donation is made, a delivery of proceeds from the donation is made, or both, the user is notified that the delivery has been performed.

Claim 8: A method comprising:

a. shopping at a customized dispensing device;
b. making a purchase at the customized dispensing device; and
c. providing a unique code, a radio frequency identification device (RFID) as a tag, a RFID card, a RFID stick, or a combination thereof to a user, wherein the user will be recognized by a RFID reader included in the customized dispensing device by presenting the unique code, the RFID tag, the RFID card, the RFID stick, or a combination thereof to the RFID reader.

Claim 9: The method of claim 8, wherein the customized dispensing device is the dispensing device of any of claims 1 through 7.

Claim 10: The method of claims 8 through 9, wherein shopping at the customized dispensing device includes a step of donating a portion of each purchase.

Claim 11: The method of claims 8 through 10, wherein the RFID tag, the RFID card, the RFID stick, or a combination thereof connect to the user's handheld device, social media, e-mail, or a combination thereof, and

wherein when the donation is delivered to an outside charitable vendor, meals, food and/or clothes are delivered by the outside charitable vendor, or both, the user is notified of the delivery, the contents of the delivery, or both.

Claim 12: The method of any of claims 8 through 11, wherein the customized dispensing device includes an output device.

Claim 13: The method of claim 12, wherein the output device displays a unique image that may be read by the user's handheld device so that the customized dispensing device can provide real time information to the user regarding the user's purchase, the donation made on behalf of the user as described in any of claims 10 through 12, or a combination thereof.

Claim 14: The method of claims 12 through 13, wherein the unique image links the user's purchase to the user's social media so that when an event occurs, the event in posted on the user's social media.

Claim 15: The method of claims 12 through 14, wherein the unique image links to the user's handheld device, and wherein the customized dispensing device can send text messages, e-mails, or both to the user to update the user regarding donations made on behalf of the user.

Claim 16: The method of any of claims 8 through 15, wherein the RFID device is located on one or more of a tester, a mirror, a storefront window, a bracelet, a card, a key fob, or a mobile device.

Claim 17: The method of any of claims 8 through 15, wherein the RFID device transmits information regarding a purchase or a donation associated with the purchase to a social media network, a corporation, a non-profit entity, a customer or any combination thereof.

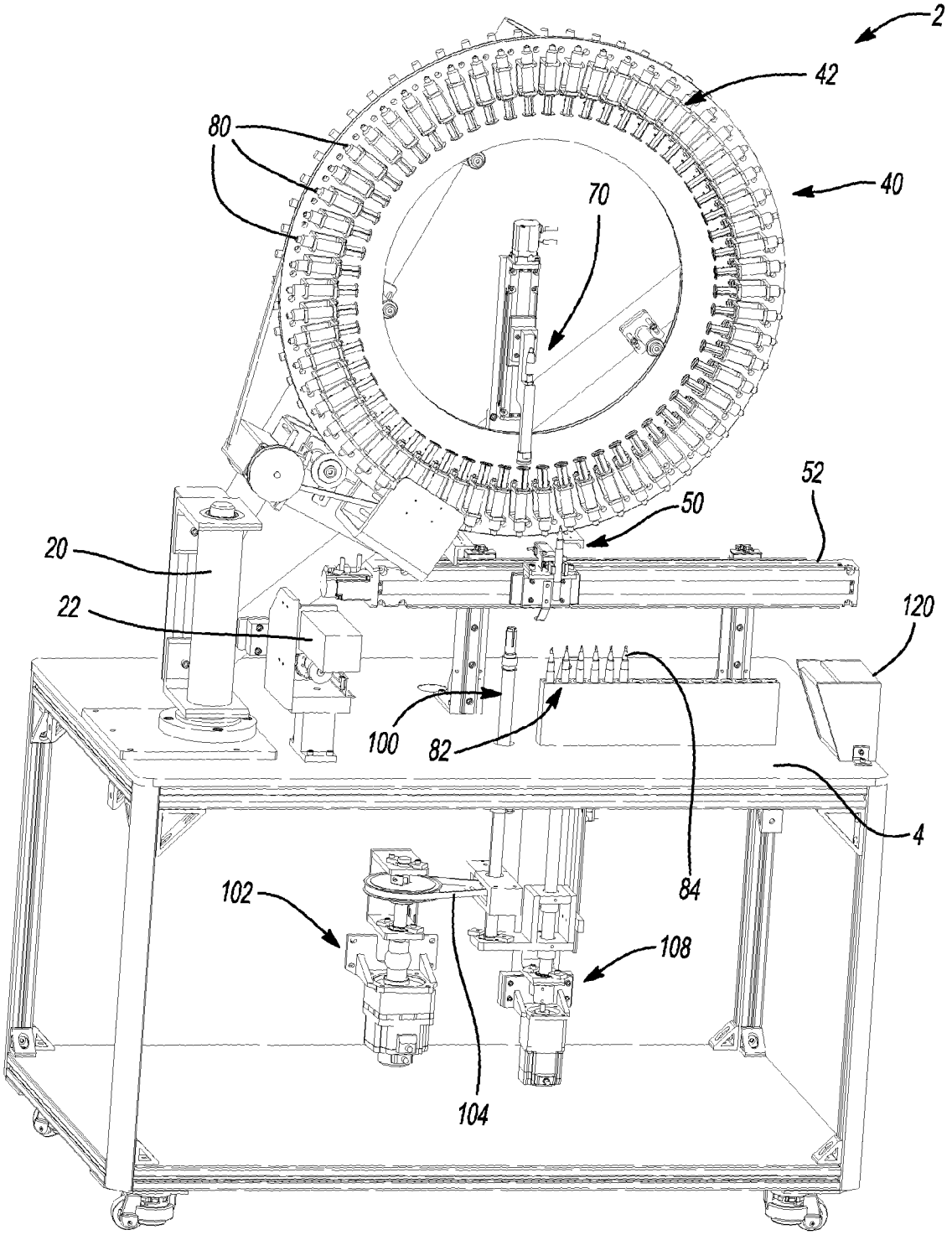

Fig-1

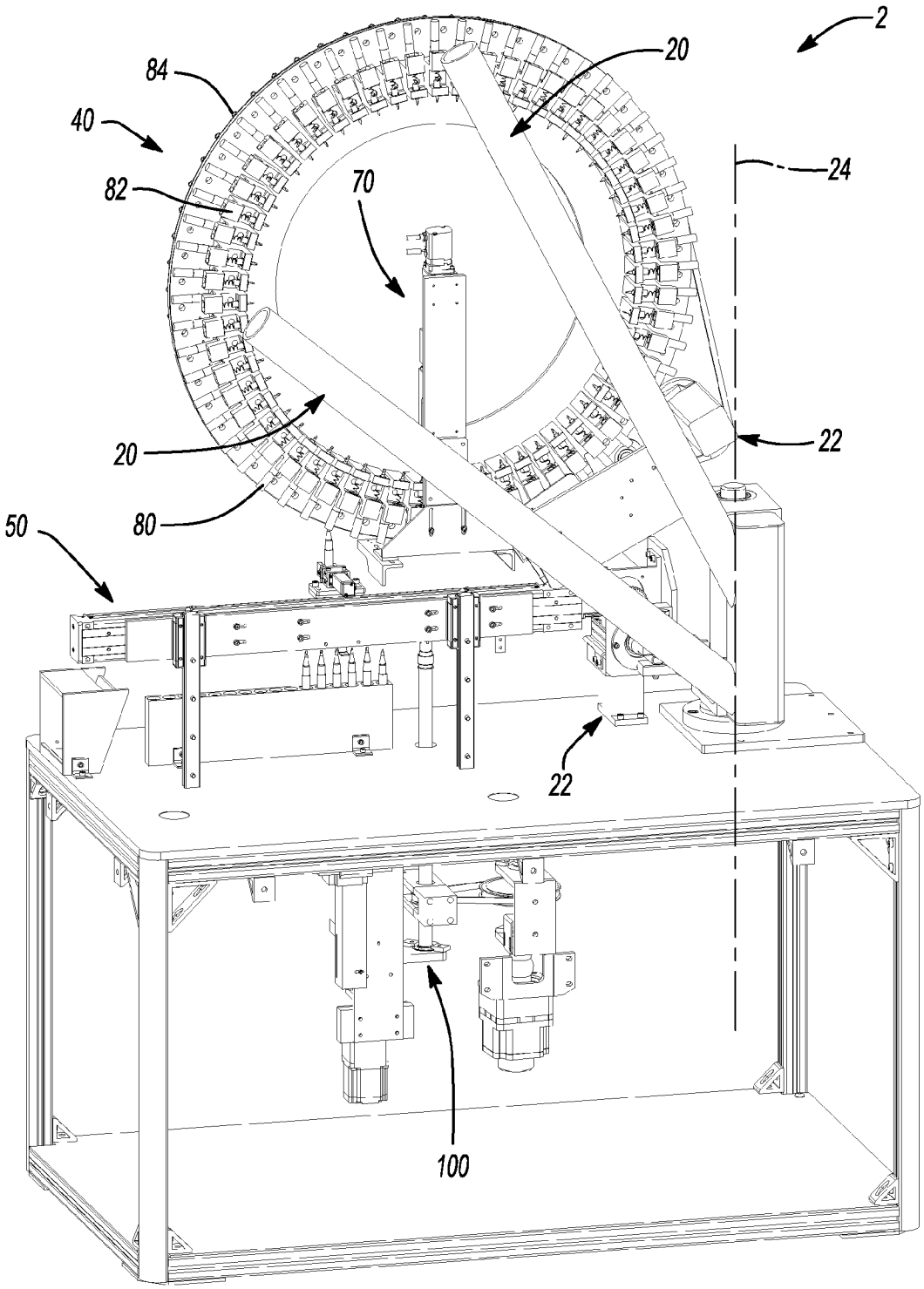

Fig-2

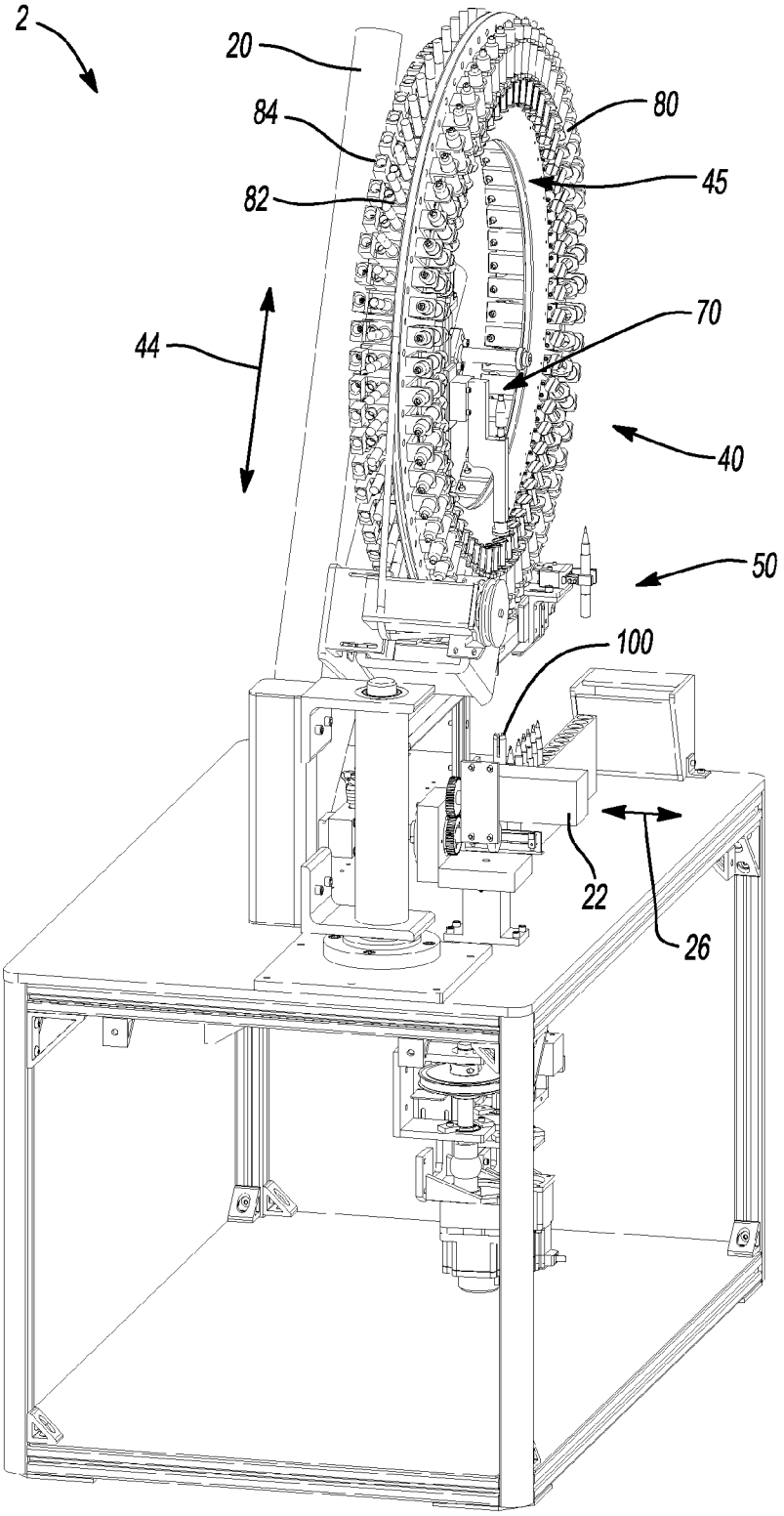

Fig-3

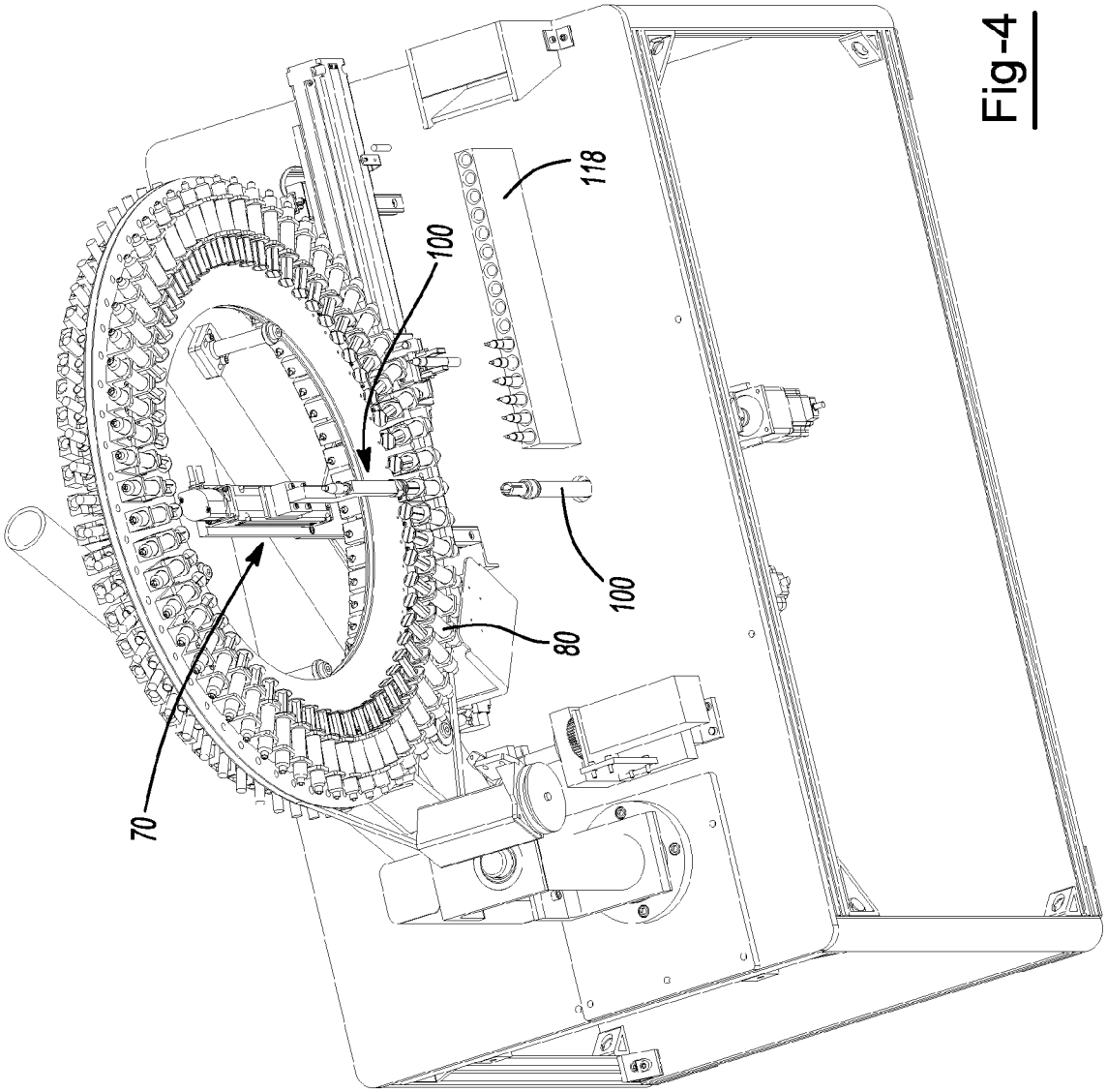

Fig-4

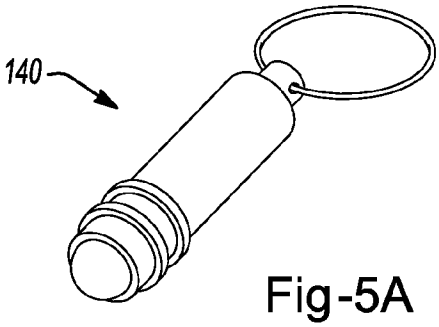

Fig-5A

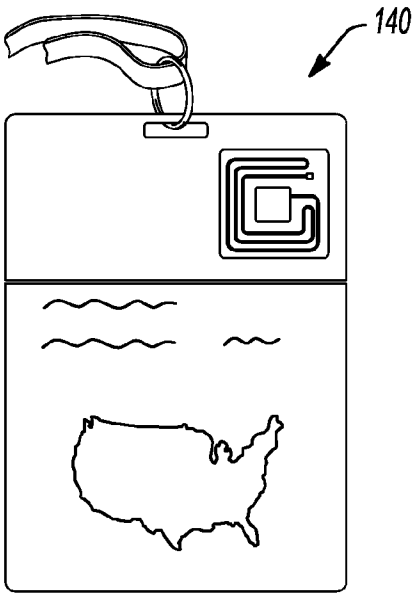

Fig-5B

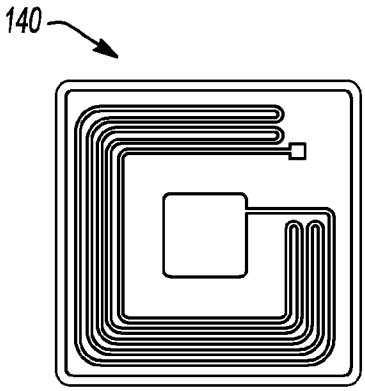

Fig-5C

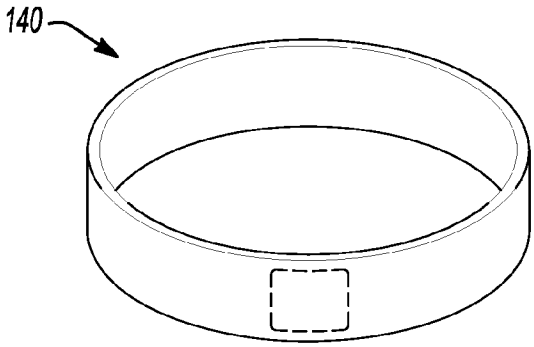

Fig-5D

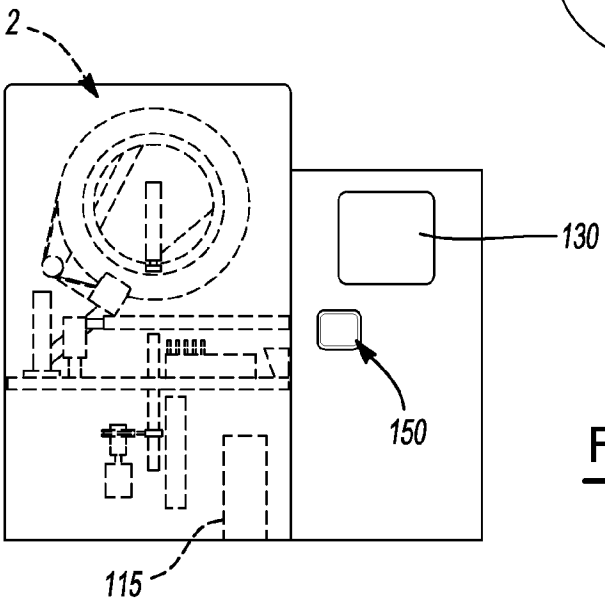

Fig-6

Espacenet

Bibliographic data: WO2014066721 (A3) — 2014-06-26

A CUSTOMIZED DISPENSING DEVICE DELIVERY SYSTEM AND METHOD

Inventor(s): BARTHOLOMEW JULIE R [US]; SCHENA MICHAEL [US] ± (BARTHOLOMEW, JULIE, R, ; SCHENA, MICHAEL)

Applicant(s): COSMETIC TECHNOLOGIES LLC [US] ± (COSMETIC TECHNOLOGIES, LLC)

Classification: **- international:** ***B01F13/10; B01F15/00***
- cooperative: **A45D44/005 (EP); B01F13/1058 (EP); B01F13/1063 (EP); B01F13/1066 (EP); B01F13/1069 (EP); B01F15/00266 (EP);** B01F2215/0031 (EP)

Application number: WO2013US66744 20131025 Global Dossier

Priority number (s): US201261719126P 20121026

Also published as: WO2014066721 (A2)

Abstract of WO2014066721 (A3)

A device for producing a customized formulation comprising: a customized dispending device 2 comprising: (a) a computer; (b) at least one robot arm 50; (c) a housing having at least one transparent panel; (d) at least one robot arm slide 52 that the at least one robot arm is connected to for sliding along the inside of the housing; (e) a rotary wheel 40; (f) a plurality of ingredient containers 80 connected to the rotary wheel; and (g) a package for ingredients to be dispensed into 82; wherein a radio frequency identification device (RFID) is included in the package, on a label of the package, on the packaging for the package, or a combination thereof, wherein the package may be tracked during shipping, signal to a user when the package is delivered, connect to social media to post a message regarding the package, or a combination thereof.

Espacenet

Description: WO2014066721 (A3) — 2014-06-26

A CUSTOMIZED DISPENSING DEVICE DELIVERY SYSTEM AND METHOD

Description of WO2014066721 (A2)

The EPO does not accept any responsibility for the accuracy of data and information originating from other authorities than the EPO; in particular, the EPO does not guarantee that they are complete, up-to-date or fit for specific purposes.

A CUSTOMIZED DISPENSING DEVICE DELIVERY SYSTEM AND METHOD

FIELD

|0001| The present teachings relate to customized dispensing device and a customized delivery system for each customized product created by the dispensing device.

BACKGROUND

f0 02| Currently, customized cosmetics may be produced that match the specific requirements of a user, match a color selected by a user, and/or the customized cosmetics are made on demand for the user at a retail location. Some of these customized formulations may be delivered to a user on site or to a remote location.

|0ΘΘ3| Examples of some customized cosmetic devices may be found in U.S. Patent os. 8,017,137; 8,186,872; 6,622,084; 6,779,686; 7,395.134; 7,099,740; and 6,412,658 all of which are expressly incorporated by reference in their entirety herein for all purposes. When customizing cosmetics, a user may wan to order and buy the same customized product without having to remember specific volumes and types of ingredients the user utilized in creating the customized cosmetics. Additionally, a user may want to have an option of sharing information concerning his or her customized cosmetics with friends and family, on social networks and/or other websites. Further still, there may be a need for the customized dispensing device to offer a user further incentive to purchase customized cosmetics such as offering a socially conscious user an option to donate certain amount of money with every purchase to a charity or offer a retail owner, a manufacturer or supplier of the ingredients, or the like the option to donate certain percentage of proceeds to a charity on behalf of the customer.

10004] Therefore, there is need for a customized cosmetics dispensing device system which will automatically detect a repeated customer and his or her choices of the customized cosmetics with an option to share the user's choices online, such as through social media, and which will promote social consciousness by allocating certain

Tesla EX1002 Page 1865 IPR2025-01034

amount of customer's spending as a donation for a social cause. Further, there is a need to provide an easy, cost-effective, user- friendly way for the customized dispensing device to recognize a repeated customer and share information about the customer with the retail location, supplier, manufacturer, th tike, or a combination thereof. SUMMARY OF THE INVENTION

[0005] The present teachings address one or more of the above needs by providing a device for producing a customized formulation comprising: a customized dispending device

comprising: (a) a computer; (b) at least one robot arm; (c) a housing having at least one

transparent panel; (d) at least one robot arm slide that the at least one robot arm is connected to for sliding along the inside of the housing; (e) a rotary wheel; (f) a plurality of ingredient containers connected to the rotary wheel; and (g) a package for ingredients to be dispensed into; wherein a radio frequency identification device (RFID) is included in the package, on a !abei of the package, on the packaging for the package, or a combination thereof, wherein the package may be tracked during shipping, signal to a user when the package is delivered, connect to social media to post a message regarding the package, or a combination thereof.

[0006] In another aspect, the present teachings contemplates a method comprising: (a) shopping at a customized dispensing device; (b) making a purchase at the customized dispensing device; and (c) providing a unique code, a RFID as a tag, a RFID card, a RFID stick, or a combination thereof to a user, wherein the user will be recognized by a RFID reader included in the customized dispensing device by presenting the unique code, the RFID tag, the RFID card, the RFID stick, or a combination thereof to the RFID reader.

[0007] Preferably, the device includes a RFID reader in communication with the FID, wherein the device can read the RFID from the package during a subsequent transaction so that the device can produce the same customized formulation. Preferably, the device is in

communication with an outside charitable vendor. Preferably, the device sends a signal to an outside charitable vendor when each purchase is made. Preferably, the device donates a portion of each purchase to an outside charitable vendor. Preferably, the outside charitable vendor is a local soup kitchen, a food bank, a food rescue organization, a Meals on Wheels donation center, Gleaners Community Food Bank, Feeding America, the like, or a combination thereof. Preferably, the device is coupied to a handheld device, a social media outlet, e-mail, or a combination thereof, and when a donation is made, a delivery of proceeds from the donation is made, or both, the user is notified thai the delivery has been performed. Preferably, shopping at the customized dispensing device includes a step of donating a portion of each purchase. Preferably, the RFID tag, the RFID card, the RFID stick, or a combination thereof connect to the users handheld device, social media, e-mail, or a combination thereof, and when the donation is delivered to an outside charitable vendor, meals, food and/or clothes are delivered by the outside charitable vendor, or both, the user is notified of the delivery, the contents of the delivery, or both. Preferably, the customized dispensing device includes a output device. Preferably, the output device displays a unique image that may be read by the users handheld device so that the customized dispensing device can provide reai time information to the user regarding the users purchase, the

donation made on behaif of the user, or a combination thereof. Preferably, the unique image links the user <'>s purchase to the user <'>s social media so thai when an event occurs, the event in posted on the user's social media. Preferably, the unique image Sinks to the user's handheld device, and the customized dispensing device can send text messages, e-mails, or both to the user to update the user regarding donations made on behalf of the user.

[OOOSj The present teachings provide a customized dispensing device delivery system and method of using the customized dispensing device which allows a user to choose, mix., and receive a customized cosmetic formulation while the device is capabie of recognizing a repeated customer and his or her choices, preferences, and prior purchases, and further still allowing a user to contribute to social causes by allocating certain percentage of each purchase amount to be delivered to an outside charitable vendor. The advantage of offering customized products of the present invention is accomplished by offering a user a choice to combine ingredients supplied by the customized dispensing device through an interactive display, a RFID, a RFID enabled phone or tablet, an application, a website, or a combination thereof. The additional advantage of recognizing a repeated customer is accomplished by providing a user with a RFID which will receive signals from and send signais to a RFID reader incorporated in the customized dispensing device. The advantage of this feature of the present invention lies in allowing a user to reorder customized products without having to remember the type and amount of ingredients used and allowing a customer to order, pay, and contribute to social causes in a fast, convenient manner. An additional advantage of the present invention is that the RFID and RFID reader included in the customized dispensing device allows communication between the retail location, manufacturer, supplier of the ingredients, or the like, and the user, for example by sending personalized messages when new customized products are available, when a donation is utilized, or other information. Furthermore, the RFID reader may collect information concerning users, amount and type of ingredients used, and/or customized products created, or the like, and send this informatio to the retail location, manufacturer, supplier of the ingredients, or the like for cost-saving, fast, and efficient method of tracking ingredients and customized products. BRIEF DESCRIPTION OF THE DRAWINGS

(Q009j Fig. 1 illustrates a front view of a customized dispensing device as taught herein.

[0010] Fig. 2 illustrates a rear view of the customized dispensing device of Fig. 1.

[0011] Fig. 3 illustrates a side view of the customized dispensing device of Fig, 1.

(0012j Fig. 4 illustrates a top view of the customized dispensing device of Fig. 1.

[0013] Figs. 5A through 5D illustrate different examples of RFIDs taught herein to allow communication between the customized dispensing device and the user.

[00.14] Fig. 6 illustrates one example of a custom dispensing device as taught herein,

DETAILED DESCRIPTION

[0015] The explanations and illustrations presented herein are intended to acquaint others skilled in the art with the teachings, its principles, and its practical application.

IPR2025-01034
Tesla EX1002 Page 1867

Those skilled in the art may adapt and apply the teachings in its numerous forms, as may be best suited to the requirements of a particular use. Accordingly, the specific embodiments of the present teachings as set forth are not intended as being exhaustive or limiting of the teachings. The scope of the teachings should, therefore, be determined not with reference to the above description, but should instead be determined with reference to the appended claims, along with the full scope of equivalents to which such claims are entitled. The disclosures of all articles and references, including patent applications and publications, are incorporated by reference for all purposes. Other combinations are also possible as wiii be gleaned from the following claims, which are also hereby incorporated by reference into ibis written description.

[0016] The device as taught herein may include a housing, one or more transparent panels, a delivery window, an interactive display, a controller, a computer, a platform, a carrier support, a carrier, a carrier drive, a rotary wheel, rotational drive, vertical drive, one or more robot arms, one or more robot arm slides, one or more dispensing actuators, a plurality of ingredient containers, a plurality of packages, a plurality of caps, a packaging support, a RF!D reader, a FID, or a combination thereof.

[0017] The housing accommodates and protects the customized dispensing device as taught herein. The housing may accommodate and enclose a substantial portion of the components of the apparatus, such as one or more carriers, a dispensing mechanism, a control device, and/or other components of the device. Alternatively, one or more components may be located outside or otherwise attached to the housing. The housing may be made of one or more transparent panels and one or more housing walls. Preferably, the housing is made of at least 5 transparent panels so that the device can be viewed from all angles. The housing may have one or more sides that are transparent. Preferably, about 50 percent or more, about 80 percent or more, about 70 percent or more, about 80 percent or more, or about 90 percent or more of the housing is transparent so that the customized dispensing device, and/or movement of a user's customized product being dispensed is visible. The housing may be suitably sized for any given application. For example, the housing may be sized to be mounted on a counter top or the like. Alternatively, the housing may comprise a standalone seif-contained monolithic structure. It should be appreciated that smaller or larger configurations of each are available. However, preferably the housing is sized so as to receive two or more components, such as the plurality of the ingredient containers and one or more robotic arms, though other configurations are available. Additionally, the housing may include an interactive display for communication between the user and customized dispensing device through whic a user may create or after orders and through which a user may make his or her choices concerning a social cause. The housing also incluides a delivery window through which a user retrieves ordered customized products, and/or a RFID.

](MV!8j The device may include an output device. The output device may be any piece of hardware equipment used to communicate results of data processing carried out by an information processing system such as a computer. The output device may be an input output device. The output device may be a display device such as a screen, a monitor, a printer, n interactive display, the like, or a combinatio thereof. The output device may display a unique image that may be read by a user's handheld device so that the customized dispensing device can provide real time information to the user regarding the user's purchase, the donation made on behalf of the user, or a combination thereof. The unique image may link the user's purchase to the user's

IPR2025-01034
Tesla EX1002 Page 1868

social media so that when an event occurs, the event in posted on the user's social media. The unique image may link to the user's handheld device, and the customized dispensing device can send text messages, e-mails, or both to the user to update the user regarding donations made on behalf of the user.

|0019| The device may contain a controller such as a computer. The computer may be any general purpose device that can be programmed to carry out a set of arithmetic or logical operations needed to operate the customized dispensing device. The computer assists in the operation of a variety of parts of the customized dispensing device, such a earner, a carrier drive, a rotar wheel, a rotational drive, a vertical drive, one or more robot arms, one or more robot arm slides, one or more dispensing actuators, a plurality of ingredient containers, a plurality of packages, a plurality of caps, a packaging support, a FSD reader, a RFID, the like, or a combination thereof.

{0020] The device may be connected to a platform so that the device and the platform can be transported to a retail location, a dispensing location, or both. The device may include a carrier support that is movably attached to the platform. The carrier support may slide along a track. Preferably, the carrier support is rotatable around an axis. The carrier support may be moved by a carrier drive thai pushes the carrier support along a track and/or around the axis.

fi)02I] The carrier support supports a carrier. The carrier may have any size, shape, or a combination thereof so that it can carry carrying ports. For example, the carrier may be shaped as a rotary wheel. The carrier has one or more rows of carrying ports. The carrying ports may carr any material that may be used to make a custom cosmetic. Preferably, the carrier includes at least 3 rows of carrying ports. The carrying ports may carry ingredient containers, caps, packages, brushes, supplies, cloths, applicators, mixers, the like, or a combination thereof. The arrangement of the ingredient containers, caps, packages, brushes, supplies, cloths, applicators, mixers, the like, or a combination thereof on the carrier may vary between applications or otherwise. Suitable arrangements include patterns such as radially disposing or linearly disposing of the ingredient containers, caps, packages, brushes, supplies, cloths, applicators, mixers, the like, or a combination thereof onto the carrier. However, non-pattern arrangements are also contemplated. The carrying ports may exist on a common plane or on a plurality of planes. The carrying ports may be mounted at an angle with respect to the surface of the carrier. Other configurations are contemplated and within the scope of the present invention. The carrying ports may be aligned with the one or more robot arms, the dispensing actuator, the packaging support, or a combination thereof so that a package ma be moved into the packaging support, ingredients may be dispensed into the packages, the ingredients in the packages may be mixed, or a combination thereof. The carrier may be moved around the axis of the carrier support so that each row of carrying ports aligns with a respective device so that a customized cosmetic may be created. Control of the drive motor (e.g., the rotation of the carrier) and the dispensing mechanism is achieved via a controller, which may or may not be located within or otherwise attached to the housing. A preferred controller comprises a computer or the like. Additional aspects of the teachings of a carrier can be gleaned from the teachings herein, including those of Column 3, lines 50 through Column 4, lines 23; Column 6, lines 82 through Column 7, lines 6 of Patent No. 8, 186,872 incorporated by reference herein, which shows various alternative embodiments for a carrier. The carrier may be located adjacent to a robot arm;. [0022J The one or more robot arms provide movement along at least one axis. The one or more robot arms may be any robot arm that assists in creating a custom cosmetic. The one or more robot

IPR2025-01034
Tesla EX1002 Page 1869

arms may be movable along one or more axis. The one or more robot arms may be movable around 2, 3. 4, 5, or even 6 axes. In addition to the one or more axis of movement of the one or more robot arms, the one or more robot arms may be adapted for rotational movement about the one or more of the one or more axis, thereby generating 2, 3, 4, 5, 6, 7, 8, 9, 10 or more degrees of freedom. The one or more robot arms may be programmable so that the ingredients can be situated randomly within the apparatus and the robot arm will be programmed to locate the proper location and/or cause dispensing from the ingredients containers, it should be appreciated that the one or more robot arms and the carrier are movable relative to one another. The one or more robot arms may assist in mixing. The one or more robot arms may hold a mixer stationar during mixing. The one or more robot arms may include an integral: mixer. The one or more robot arms may slide along a robot arm slide so that the one or more robot arms may move along al! or a portion of the platform. The one or more robot amis may be further configured for retrieval, placement, and removal of a package from a dispensing site of the dispensing apparatus. The robot arm may be further configured for replacement of the ingredient containers o the carrier upon substantial expiration of the contents located therein. The robot arm may be configured with corresponding grasping means for removal, attachment, and manipulation of an ingredient container, package, or otherwise. The one or more robot arms are configured to withdraw (via vacuum, suction, or otherwise) one or more ingredients from an ingredient container and expel the one or more ingredients into a package. Accordingly, the robot arm may aiso carry one or more needles, ladles, aspirating tubes, or other suitabie devices that can be dipped into the one or more ingredient containers and withdraw ingredients. As such, it should also be appreciated that the dispensing device may further include a purging or cleaning devic for cleaning needles, ladles, aspirating tubes, or other suitabie devices, which is particularly advantageous when one device is used to withdraw contents from more than one ingredient container. In another aspect, the one or more robot arms are configured to actuate expulsion of the one or more ingredients through an orifice of the one or more ingredient containers. Accordingly, the one or more robot arms may apply a force to cause the one or more containers to expel one or more ingredients. In yet another aspect, the one or more robot arms are configured to retrieve one or more ingredient containers and move the one or more ingredient containers to a dispensing location for dispersing into a package and subsequentl place the one or more ingredient containers back to their original positions. Other configurations are contemplated and within the scope of the present invention. The one or more ingredient containers and the one or more robotic arms of the dispensing apparatus may be movably mounted with respect to one another. It should also be appreciated that plural robot arms may be employed, such as one for retrieving one or more ingredient containers and another for causing ingredients to be removed from the one or more containers. Additional aspects of the teachings of a robot arm and robot arm slide can be gleaned from the teachings herein, inciuding those of Column 3, lines 85 through Column 5, lines 57; Column 9, line 9 through Column 15, lines 35; and Column 21, line 5 through Column 24, line 22; and Figures 1A-1C; 3A-3F; 4A-5E; and 9A-9B of Patent No. 8,186,872 incorporated by reference herein, which shows various alternative embodiments for a robot arm.

f0ll23| A dispensing actuator may assist in dispensing of one or more ingredients from one or more ingredient containers. The dispensing actuator may be a vacuum, an actuator that pushes the ingredients out of the one or more ingredient containers, a ladle, a spoon, the like, or a combination thereof. The dispensing actuator may be magnetic, having at least one magnet adapted for moving an actuatable member contained within an ingredient container. The dispensing actuator may have any size,

shape, form, or a combination thereof, such as a shape adapted for movement along at least one axis, for applying force against a plunger portion of an ingredient container, for carrying a package, or a combination thereof. The dispensing actuator may be adapted for vertical movement, horizontal movement, or both. The dispensing actuator may be electronically controlled or controlled by a suitable controller, which preferably includes a programmable logic control. The dispensing actuator may be located proximate to the one or more robot arms. The dispensing actuator may be a part of a mixe device. The dispensing actuator may be operably associated with a holder of the mixer device so that the actuatable member contained within the container, when held by the holder, positions the actuatable member in magnetic communication with the magnetic actuator for actuation of the actuatable member by the actuator. The dispensing actuator may Include a volumetric servo system for movement of a plunger of an ingredient container. The dispensing actuator may further include a gripper portion adapted to hold a package for receiving ingredients from the one or more ingredient containers. Preferably, the gripper portion is located below the servo system and below nozzles of the one or more ingredient containers. The gripper portion may also be vertically movable for facilitating movement of the package, such as movement of the package to a mixer. Additional aspects of the teachings of a dispensing apparatus can be gleaned from the teachings herein, including those of Column 3, line 5 through Column 3, lines 28; Column 8, Sine 47 through Column 8, lines 62; Column 9, line 20 through Column 25, line 27; and Figures 2-3, 4A-8B, and 11A- 4 of Patent No. 8,186,872 incorporated by reference herein, which shows various alternative embodiments for a customized dispensing device.

f(W24] The one or more ingredient containers may be any containers that hold and dispense an ingredient. The one or more ingredient containers can have any size, shape, form, or a combination thereof. The device contains at least one container. The arrangement of the one or more ingredient containers on the carrier may vary between applications or otherwise. Suitable arrangements include patterns such as radially disposing or linearly disposing of the one or more ingredient containers onto the carrier. However, non-pattern arrangements are aiso contemplated. The one or more ingredient containers may exist on a common plane or on a plurality of planes. Also, the one or more ingredient containers may be mounted on an angle with respect to the surface of the carrier. Other configurations are contemplated and within the scope of the present invention. The one or more ingredient containers may have an open top so that ingredients may be removed from the one or more ingredient containers. Preferably, the one or more ingredient containers may be syringe, actuafable devices, devices that Include a funnel, or a combination thereof. The one or more ingredient containers mounted to the carrier are preferably replaceable upon substantial expiration of the contents inside or otherwise. As such, preferably, the mounting means for the one or more ingredient containers allow for subsequent removal of the one or more ingredient containers for replacement. Replacement of the one or more ingredient containers may be performed by a technician or automated, as described herein. As such, it is further contemplated that the one or more ingredient containers, the carrier, the dispensing mechanism, or otherwise include a sensor for monitoring the amount of ingredients remaining in one or more, and preferably all, of the ingredient containers. Suitable sensors Include position sensors, weight sensors, pressure sensors, any combination thereof, or otherwise. Additionally, the one or more ingredient containers may be any containers that assist in mixing a cosmetic. The one or more ingredient containers may include caps. The caps may assist in mixing. The caps may include a mixing device. The mixing device may be a spring. The caps may be gripped by the one o more robot arms and a packaging support may rotate, move up and down, or

IPR2025-01034
Tesla EX1002 Page 1871

both so that the mixing device held by the one or more robot arms mixes the contents of the packaging. The packaging support may be any structure supporting the packaging. The packaging support may be movable up and down by a rotation drive. The packaging support may be rotated by a rotational drive. The vertical drive and rotational drive may be any device that moves the packaging support. The drives may be a servo motor, a stepping motor, a brushiess motor, or a combination thereof. The drives may be a direct drive, an indirect drive (e.g., belt driven), or a combination thereof. Additional aspects of the teachings of one or more ingredient containers can be gleaned from the teachings herein, including those of Column 3, lines 53 through Column 4, Sine 23; Column 5, fine 19 through Column 7, line 58 and Figures 2, 8, 7A-8B, and 11 B - 14 of Patent Ho, 8,186,872 incorporated by reference herein, which shows various alternative embodiments for an ingredient container.

(0025] The ingredients of the one or more ingredient containers are preferably adapted to be mixed together to form a customized product. The ingredients may be dispensed into one or more ingredient containers. The customized product may be liquid, liqu id-powder based, or powder in form. Advantageously, in one example, the customized product includes a cosmetic product. Such cosmetic product may include, but is not limited thereto: lipstick, eye shadow, lip gloss, foundation, lip liner, nail polish, blush, eye shadow, mascara, body lotion, face powder, or otherwise. As such, it should be appreciated that the packages receiving the mixture of ingredients comprise packages typically used for storing such cosmetics (e.g., nail polish container, lip gloss container, or otherwise). Likewise, it should be appreciated that the one or more ingredient containers may include one or more applicators for applying the same. Other ingredients that may be stored and dispensed from the ingredient containers include gloss, glitter, tints, sparkles, or other effects that may be advantageous with a cosmetic, or other customized product.

[0Θ26] The device may include a storage box so that finished customized products may be placed in the storage box to await users of the customized dispensing device to pick their packages, to await delivery, or both. The packages may be delivered through a delivery window in the housing directly to a user, to a delivery person, or both.

(0027] The device may include a RFID which serves as an information retrieval device. The RFID may be placed on the packaging, in the packaging, provided to a user, provided as a stick, such as MX Stick™, provided as a tag, suc as MX Tag™, a card, such as MX Card™, enabled with a mobile phone, a tablet, a pass, such as an RIFD VIP Pass allowing access to a variety of events, promotions, and social media opportunities, an RFID technology embedded within a piece of accessor such as a bracelet, or a combination thereof . The RFID may be i cluded i a tester, in a mirror (which may or may not be directly connected to or associated with the device), a window (e.g., a storefront window), a bracelet, a card (e.g., a credit card, a frequent shopper card or the like), a key fob, and RFID-enabied mobile device or any item that can be tagged with RFID. The device may both transmit and receive RFID information. The device may receive RFID data so that a specific product is created. The device may then transmit information (possibly via RFID) regarding the product and/or the customer purchasing the product to one or more destinations including mobile device, social networking platforms, corporate databases, non-profit partners, and the customer and/or any customer-selected network. The RFID receives and sends a signal from and to an RFID reader housed in the customized dispensing device. The RFID reader identifies each RFID as an object with a unique number which is connected to one or more purchases from the customized dispensing device. For

example, a user may purchase a customized product and when the user purchases a customized product the user may be provided with an RFID. The RIFD may be included in the package, on a label of the package, on the packaging for the package, or a combination thereof, Next time a user approaches a customized dispensing device with the RFID and presents the RFID in front of the RFID reader, such as waves the RFID near the RFID reader, the RFID reader within the customized dispensing device retrieves the user's data including recipes of prior purchases and/or other information. Therefore, the customized dispensing device can produce the same customized formulation during a subsequent transaction. Once in the possession of the user, the RFID may be used to recall past orders from a user, to place new orders, to maintain a user's wish list, to make a payment, to order online, to request delivery, to track information relating to the health, other attributes of the user, to share information, or otherwise. For example, the RFID may be configured to store information relating to the amount of products purchased, consumed, or otherwise dispensed from the dispensing apparatus of the present invention. The RFID may further be configured to store, record and/or monitor information relating to a user's diet, weight, cholesterol, blood sugar, or other levels or parameters related to the health of the user or otherwise. The RFID may still further be configured to make recommendations of ingredients to be dispensed from the dispensing apparatus based upon stored information in the RFID, which optionally is related to me user. The RFID and RFID reader may also gather and provide information regarding the user, and his or her orders, and/or demographic information related to the user to the retail location, ingredient manufacturer, supplier, and the like; advertise; send promotions; send product and/or other information to the user via messages such as personalized messages on Facebook§> and other social networks. The RFID and RFID reader may also monitor inventory, maintenance, sales, and funds transferred to social causes and provide such information to retail partners, ingredient manufacturer, supplier, and the like, in real-time to provide an efficient cost-saving method of tracking ingredients and products. The RFID may enable a wireless device, such as a tablet or a smart phone, to work with the wireless device so that the user may receive content from the customized dispensing device regarding an order or a social program in conjunction with the customized dispensing device. For example, a user may create and order a product using the customized dispensing device's interactive display, an RFID enabled phone or tablet, an application, a website, or a combination thereof. A user may also use the RFID to set up a link with the user's wireless device, social media, or some other network and the customized dispensing device. The IFD may be used to raise social awareness and social consciousness. For example, the customized dispensing device may be in communication with and donate a portion of the user's purchase to an outside charitable vendor such as a local, national, or international charitable organization, a local soup kitchen, a food bank, a food rescue organization, a Meals on Wheels donation center, Gleaners Community Food Bank, Feeding America, the like, or a combination thereof. The customized dispensing device may send a signal to the outside charitable vendor when each purchase is made. The customized dispensing device, the RFID tag, the RFID card, the RFID stick, or a combination thereof may be coupled to and/or connect to the customer's handheld device, social media, e-mail, or a combination thereof, and the user may be notified that the delivery has been performed when a donation is made, a delivery of proceeds from the donation is made, or both. For example, the donation from the customized dispensing device on behalf of the user may be trackable via the RFID so that the user is alerted when and how the user's payment is being used in a socially conscious manner, for example, a user may receive a real-time text notification when meals, food, clothes, the like, or a combination thereof are delivered through Feeding America or another outside charitable vendor, about the contents of the

delivery, or both on the user's behalf. Thus, in another example, a donation may be made by the customized dispensing device and/or the retail location to an outside charitable organization and the unique RFID provided to the user may enable a Sink to be generated with a Facebook® page, Twitter® account, other social media, a network, or a combination thereof so that a user is alerted when the proceeds are delivered to the charitable organization and/or the donation is made by the charitable organization. In yet another example, the user may receive a text message or an e- mail regarding the donation. Preferably, the messages are real-time so that when the donation is made, the user is instantl updated so that the user experiences their persona! impart in realtime. Additionally, the RFID may provide demographic information to a sociai media outlet so that a user's friends and family know the current trends regarding the user, a collective area, a specific cosmetic, or a combination thereof. The RFID may store information regarding a user's donation, recall this information when a user makes another order through the customized dispensing device, offer the same charitable target to the user, or allow the user to seek alternative donation targets based on user's preference.

|0 28| The method for utilizing the invention may include one or more of the following steps, and the steps may be performed in virtually any order. Providing at a retail store a point-of-sale custom formulation dispensing apparatus, including a plurality of ingredients containers, Providing a user interface for enabling a customer to select a custom formulation and a housing that contains one or more of the following; one or more transparent panels, a delivery window, an interactive display, a computer, a piatform, a carrier support, a carrier, a carrier drive, a rotar wheel, rotational drive, vertical drive, one or more robot arms, one or more robot arm slides, one or more dispensing actuators, a plurality of ingredient containers, a plurality of packages, a plurality of caps, a packaging support, a Rf ID reader, a RF1D, or a combination thereof. Dispensing one or more ingredients into at least one ingredient container. Locating the ingredient container at a mixing location using an automated computer control locating mechanism. Mixing the dispensed ingredients. Placing an RFSD on the packaging, in the packaging, on a label of the package, on the packaging for the package, or a combination thereof. Providing an RFID to a user as a stick, such as MX Stick™, as a tag, such as MX Tag™, a card, such as iVIX Card™, enabling RFID with a mobile phone, a tablet, a pass, such as an RSFD VIP Pass allowing access to a variety of events, promotions, and social media opportunities, embedding an RFID technology within a piece of accessory such as a bracelet, or a combination thereof. Shopping at a customized dispensing device. Making a purchase at the customized dispensing device. Creating and ordering a product using the customized dispensing device's interactive display, an RFID enabled phone or tablet, an application, a website, or a combination thereof. Providing a unique code, a RFiD tag, a RFID card, a RFID stick, the like, or a combination thereof to a user, wherein the user wi!i be recognized b a RFID reader included in the customized dispensing device by presenting the unique code, the RFID tag, the RFID card, the RFSD stick, the like, or a combination thereof to the RFID reader. Using the RFID to recall past orders from a user, placing new orders, maintaining a user's wish list, making a payment, ordering online, requesting delivery, tracking information relating to the health, other attributes of the user, sharing information, or otherwise. Using the RFID to store information relating to the amount of products purchased, consumed, or otherwise dispensed from the dispensing apparatus of the present invention. Using the RFSD to store, record and/or monitor information relating to a user's diet, weight, cholesterol, blood sugar, or other levels or parameters related to the health of the user or otherwise. Using the RFID to make recommendations of ingredients to be dispensed from the dispensing apparatus based

upon stored information in the RFID, which optionally is related to the user. Using the RFSD and RFID reader to gather and provide information regarding the user, and his or her orders, and/or demographic information related to the user to the retail location, ingredient manufacturer, supplier, and the like; to advertise: to send promotions; to send product and/or other information to the user via messages such as personalized messages on Facebook® and other social networks; to monitor inventory, maintenance, sales, and funds transferred to social causes and provide such information to retail partners, ingredient manufacturer, supplier, and the like, in real-time to provide an efficient cost-saving method of tracking ingredients and products. Enabling with a RFID a wireless device, such as a tablet or a smart phone, to work with the customized dispensing device so that the user may receive content from the customized dispensing device regarding an order or a social program in conjunction with the customized dispensing device. Using a RFID to set up a Sink with the user's wireless device, social media, or some other network and the customized dispensing device. Using a RIFD to raise social awareness and social consciousness. Using a RFID to communicate and donate a portion of the user's purchase to an outside charitable vendor suc as a local, national, or internationa} charitable organization, a local soup kitchen, a food bank, a food rescue organization, a Meals on Wheels donation center, Gleaners Community Food Bank, Feeding America, the like, or a combination thereof. Using th customized dispensing device to send a signal to the outside charitable vendor when each purchase is made. Donating a portion of each purchase using the RFID. Choosing a charitable target of the donation. Using the customized dispensing device, the RFID tag, the RFID card, the RFID stick, or a combination to be coupled to and/or connect to the customer's handheld device, social media, e-mail, or a combination thereof. Notifying a user that the delivery has been performed when a donation is made, a delivery of proceeds from the donation is made, or both. Tracking the donation via the RFID so that the user is alerted when and how the user's payment is being used in a socially conscious manner. Sending and receiving a real-time text notification whe meals, food, clothes, the like, or a combination thereof are delivered through Feeding America or another outside charitable vendor, about the contents of the delivery, or both on the user's behaif. Making a donation by the customized dispensing device and/or the retail location to an outside charitable organization, providing the unique RFID to the user, using the RFID to enable a link to be generated with a Facebook® page, Twitter® account, other social media, a network, or a combination thereof so that a user is alerted when the proceeds are delivered to the charitable organization and/or the donation is made by the charitable organization. Updating a user about the charitable target of the donation. Using the RFID may to provide demographic information to a social media outlet so that a user's friends and family know the current trends regarding the user, a collective area, a specific cosmetic, or a combination thereof. Using the RFID to store information regarding a user's donation, recalling this information when a user makes another order through the customized dispensing device, offering the same charitable target to the user, or allowing the user to seek alternative charitable targets based on user's preference. [0029J Figure 1 illustrates a front view of a customized dispensing device 2 as taught herein. The customized dispensing device 2 is connected to a platform 4 via a carrier support 20. The carrier support 20 is moved by a carrier drive 22. The carrier support 20 moves the carrier 40 with carrying ports 42 that include a plurality of ingredient containers 80, The carrier 40 rotates until the ingredient containers 80 are aligned with a dispensing actuator 70 thai assists in dispensing ingredients, A robot arm 50 moves along a robot arm slide 52 so that the robot arm 50 picks up packages 82 so that ingredients are dispensed into th packages 82 from the ingredient containers 80, The robot arm 50 places each package 82 into a packaging support 100 that s

located below the dispensing actuator 70, The packaging support 100 is connected to a rotational drive 102 and a vertical drive 108, The rotational drive 102 includes a belt 104 that connects to the packaging support 00 and rotates th packaging support 100 so that when ingredients are placed in the package, the ingredients are mixed. The vertical drive 04 moves the packaging support 100 vertically so that a mixer that is held by the robot arm 50 can be used to mix the ingredients in the package 82 when the packaging support 100 moves up and down. Once a cap 84 is attached to the package 82, and the package is complete, the robot arm 50 delivers the package 82 to the consumer through the delivery window 120.

(Θ3Θ] Figure 2 illustrates a rear view of the customized dispensing device 2 of Fig. 1. The carrier support 20 includes an axis 24 that the carrier support 20 rotates around. During operation, the carrier drive 22 pushes against one of the carrier supports 20 and the carrier support 20 and the carrier 40 rotates around the axis 24 so thai the ingredient containers 80, caps 84, and packages 82 align with the robot arm 50, the packaging support 100, and/or the dispensing actuator 70. Once the carrier 40 is aligned with one of the robot arm SO, the packaging support 100, or the dispensing actuator 70, the carrier drive 42 moves the carrier 40 so that the respective package 82, cap 84, or ingredient container 80 is aligned so that the package 82, cap 84, or ingredient container 80 can be transferred into a working relationship with one of the robot arms 50, the packaging support 100, or the dispensing actuator 70.

1003 I I Figure 3 illustrates a side view of the customized dispensing device 2 of Fig. 1. As illustrated, the carrier support 20 is moved by the carrier drive 22 in the direction 28 so that the contents of the carrier's 40 rotary wheei 45 moves forwards and backwards into alignment with the robot arm SO and/or the packaging support 100. The carrier wheel 40 is rotated in the direction 44 by the carrier drive 22 so that an ingredient container 80, package 82, or cap 84 is aligned with the robot arm 50, packaging support 00, dispensing actuator 70, or a combination thereof.

[0032] Figure 4 illustrates a top view of the customized dispensing device of Fig. 1. As illustrated, an ingredient container 80 is aligned with the packaging support 100 so that the dispensing actuator 70 can dispense an ingredient. Once a package 80 is complete, the package 80 may be stored in a storage box 18.

(0033] Figures 5A through 5D illustrate different examples of RFSDs 140 taught herein to allow communication between the customized dispensing device 2 and a user, a retail location, a supplier, a manufacturer, the like, or a combination thereof. Figure 5A illustrates an MX Stick, figure 5B illustrates an MX Pass, figure 5C illustrates a MX Tag, and figure 5D illustrates an accessory, a bracelet.

(0034] Figure 6 illustrates one example of a custom dispensing device 2 as taught herein. As illustrated, the customized dispensing device 2 includes a computer 115, an interactive display 130, and a RFID reader 150 located in such a way that the RFID reader 150 can automatically read m RIFD 140 (not depicted) when a user approaches the customized dispensing device 2. (0035] Any numerical values recited herein include all values from the lower value to the upper value in increments of one unit provided that there is a separation of at least 2 units between any lower value and any higher value. As an example, if it is stated that the amount of a component or a value of a process variable such as, for example, temperature, pressure, time and the like is, for example, from 1 to 90, preferably from 20 to 80, more preferably from 30 to 70, it is intended that values such as 15 to 85, 22 to 68, 43 to 51 , 30 to 32 etc. are expressly

enumerated in this specification. For values which are less than one, one unit is considered to foe 0.0001 , 0.001, 0,01 or 0.1 as appropriate. These are only examples of what is specifically intended and all possible combinations of numerical values between the lowest value and the highest value enumerated are to be considered to be expressly stated in this application in a similar manner,

(0036] Unless otherwise stated, all ranges include both endpoints and all numbers between the endpoints. The use of "about" or "approximately" in connection with a range applies to both ends of the range. Thus, "about 20 to 30" is intended to cover "about 20 to about 30", inclusive of at least the specified endpoints.

(0037] The disclosures of all articles and references, including patent applications and publications, are incorporated by reference for all purposes. The term "consisting essentially of to describe a combination shall include the elements, ingredients, components or steps identified, and such other elements ingredients, components or steps that do not materially affect the basic and novel characteristics of the combination. The use of the terms "comprising" or "including" to describe combinations of elements, ingredients, components or steps herein also contemplates embodiments that consist essentially of the elements, ingredients, components or steps. By use of the term "may" herein, it is intended that any described attributes that "may" be included are optional.

{0038] Plural elements, ingredients, components or steps can be provided by a singie integrated element, ingredient, component or step. Alternatively, a singie integrated element, ingredient, component or step might be divided into separate plural elements, ingredients, components or steps. The disclosure of "a" or "one" to describe an element, ingredient, component or step is not intended to foreclose additional elements, ingredients, components or steps,

j3/4039] it is understood that the above description is intended to be illustrative and not restrictive. Many embodiments as well as many applications besides the examples provided will be apparent to those of skill in the art upon reading the above description. The scope of the teachings shouid, therefore, be determined not with reference to the above description, but shouid instead be determined with reference to the appended claims, along with the full scope of equivalents to which such claims are entitled. The disclosures of all articles and references, including patent applications and publications, are incorporated by reference for all purposes. The omission in the following claims of any aspect of subject matter that is disclosed herein is not a disclaimer of such subject matter, nor shouid it be regarded thai the inventors did not consider such subject matter to be part of the disclosed inventive subject matter.

Espacenet

Claims: WO2014066721 (A3) — 2014-06-26

A CUSTOMIZED DISPENSING DEVICE DELIVERY SYSTEM AND METHOD

Claims of WO2014066721 (A2)

- Original claims
- Claims tree

The EPO does not accept any responsibility for the accuracy of data and information originating from other authorities than the EPO; in particular, the EPO does not guarantee that they are complete, up-to-date or fit for specific purposes.

CLAIMS
i claim:
Claim 1 : A device for producing a customized formulation comprising:
a customized dispending device comprising:
a computer;
at least one robot arm;
a housing having at ieast one transparent panel;
at ieast one robot arm slide that the at least one robot arm is connected to for sliding along the inside of the housing;
a rotary wheel;
a plurality of ingredient containers connected to the rotary wheel; and
a package for ingredients to be dispensed into;
wheresn a radio frequency identification device (FID) is included in the package, on a label of the package, on the packaging for the package, or a combination thereof, wherein the package may be tracked during shipping, signal to a user when the package is delivered, connect to social media to post a message regarding the package, or a
combination thereof .
Claim 2: The device of claim 1 , wherein the device includes a RFID reader in communication with the RFID, and wherein the device can read the RFID from the package during a subsequent transaction so that the device can produce the same customized formuiation o a formulation that is a modification of the previous customized formulation.
Claim 3: The device of any of the preceding claims, wherein the device is in communication with an outside charitable vendor.
Claim 4: The device of any of the preceding claims, wherein the device sends a signal to an outside charitable vendor when each purchase is made.
Claim 5: The device of any of the preceding claims, wherein the device donates a portion of each purchase to an outside charitable vendor. Claim 6: The device of claims 3 through 5, wherein the outside charitable vendor is a iocal soup kitchen, a food bank, a food rescue organization, a Meais on Wheeis donation center, Gleaners Community

Food Bank, Feeding America, the like, or a combination thereof.
Claim 7: The device of any of the preceding claims, wherein the device is coupled to a handheld device, a social media outlet, e-mail, or a combination thereof, and
wherein when a donation is made, a delivery of proceeds from the donation is made, or both, the user is notified that the delivery has been performed,
Claim 8; A method comprising:
a. shopping at a customized dispensing device;
b. making a purchase at the customized dispensing device; and
c. providing a unique code, a radio frequency identification device (RFID) as a tag, a RFID card, a RFID stick, or a combination thereof to a user, wherein the user will be recognized b a RFID reader included in the customized dispensing device by presenting the unique code, the RFiD tag, the RFID card, th RFID stick, or a combination thereof to the RFID reader.
Claim 9; The method of claim 8, wherein the customized dispensing device is the dispensing device of any of claims 1 through 7.
Claim 10: The method of claims 8 through 9, wherein shopping at the customized dispensing device includes a step of donating a portion of each purchase.
Claim 11 : The method of claims 8 through 10, wherein the RFID tag, the RFiD card, the RFID stick, or a combination thereof connect to the user's handheld device, social media, e- mail, or a combination thereof, and
wherein when the donation is delivered to an outside charitable vendor, meals, food and/or clothes are delivered by the outside charitable vendor, or both, the user is notified of the delivery, the contents of the delivery, or both.
Claim 12: The method of any of claims 8 through 1 1, wherei the customized dispensing device includes an output device. Claim 13: The method of claim 12, wherein the output device displays a unique image that may be read by the user's handheld device so that the customized dispensing device can provide real time information to the user regarding the user's purchase, the donation made on behalf of the user as described in any of claims 10 through 12, or a combination thereof.
Claim 1 ; The method of claims 12 throug 3, wherein the uniqu image links the user's purchase to the user's social media so that when an event occurs, the event in posted on the user's social media.
Claim 15; The method of claims 12 through 14, wherein the unique image links to the user's handheld device, and wherein the customized dispensing device can send text messages, e-mails, or both to the user to update the user regarding donations made on behalf of the user.
Claim 16; The method of any of claims 8 through 15, wherein the RFID device is located on one or more of a tester, a mirror, a storefront window, a bracelet, a card, a key fob, or a mobile device.
Claim 7: The method of any of claims 8 through 5, wherein the FiD device transmits information regarding a purchase or a donation associated with the purchase to a social media network, a corporation, a non-profit entity, a customer or any combination thereof.

(12) INTERNATIONAL APPLICATION PUBLISHED UNDER THE PATENT COOPERATION TREATY (PCT)

(19) World Intellectual Property Organization
International Bureau

(43) International Publication Date
25 September 2014 (25.09.2014)

WIPO | PCT

(10) International Publication Number
WO 2014/147361 A1

(51) International Patent Classification:
B60W 30/12 (2006.01) ***B60W 30/18*** (2012.01)
B60W 30/16 (2012.01) *G05D 1/02* (2006.01)
B60W 50/00 (2006.01)

(21) International Application Number:
PCT/GB2014/000088

(22) International Filing Date:
11 March 2014 (11.03.2014)

(25) Filing Language: English

(26) Publication Language: English

(30) Priority Data:
1305067.9 19 March 2013 (19.03.2013) GB

(71) Applicant: **MASSIVE ANALYTIC LTD.** [GB/GB]; 53 Chandos Place, Covent Garden, London WC2N 4HS (GB).

(72) Inventor: **FRANGOU, George John**; 51 Prince George Avenue, Oakwood, London N14 4TL (GB).

(74) Agent: **JONES, Graham Henry**; Graham Jones & Co., 77 Beaconsfield Road, Blackheath, London SE3 7LG (GB).

(81) Designated States *(unless otherwise indicated, for every kind of national protection available)*: AE, AG, AL, AM, AO, AT, AU, AZ, BA, BB, BG, BH, BN, BR, BW, BY, BZ, CA, CH, CL, CN, CO, CR, CU, CZ, DE, DK, DM, DO, DZ, EC, EE, EG, ES, FI, GB, GD, GE, GH, GM, GT, HN, HR, HU, ID, IL, IN, IR, IS, JP, KE, KG, KN, KP, KR, KZ, LA, LC, LK, LR, LS, LT, LU, LY, MA, MD, ME, MG, MK, MN, MW, MX, MY, MZ, NA, NG, NI, NO, NZ, OM, PA, PE, PG, PH, PL, PT, QA, RO, RS, RU, RW, SA, SC, SD, SE, SG, SK, SL, SM, ST, SV, SY, TH, TJ, TM, TN, TR, TT, TZ, UA, UG, US, UZ, VC, VN, ZA, ZM, ZW.

(84) Designated States *(unless otherwise indicated, for every kind of regional protection available)*: ARIPO (BW, GH, GM, KE, LR, LS, MW, MZ, NA, RW, SD, SL, SZ, TZ, UG, ZM, ZW), Eurasian (AM, AZ, BY, KG, KZ, RU, TJ, TM), European (AL, AT, BE, BG, CH, CY, CZ, DE, DK, EE, ES, FI, FR, GB, GR, HR, HU, IE, IS, IT, LT, LU, LV, MC, MK, MT, NL, NO, PL, PT, RO, RS, SE, SI, SK, SM, TR), OAPI (BF, BJ, CF, CG, CI, CM, GA, GN, GQ, GW, KM, ML, MR, NE, SN, TD, TG).

Declarations under Rule 4.17:

— *of inventorship (Rule 4.17(iv))*

[Continued on next page]

(54) Title: APPARATUS FOR CONTROLLING A LAND VEHICLE WHICH IS SELF-DRIVING OR PARTIALLY SELF-DRIVING

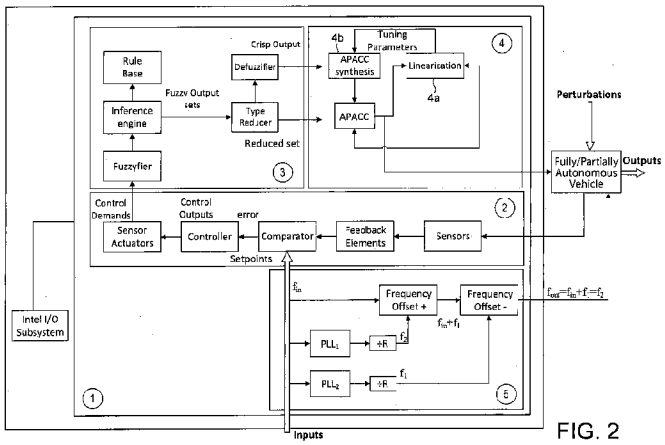

FIG. 2

(57) Abstract: Apparatus for controlling a land vehicle which is self-driving or partially self-driving, which apparatus comprises a coarse tuning assembly (1, 2, 3) and a fine tuning assembly (4), the coarse tuning assembly (1, 2, 3) being such that It comprises: a. a sensor interface (1) which measures kinematic parameters including speed and braking, b. fuzzy descriptions to model guidance, navigation and control of the vehicle, the fuzzy descriptions including: (i) driver behaviour and driving dynamics, (ii) uncertainties due to the environment including weather, road conditions and traffic, and (iii) input faults including mechanical and electrical parts, and c. an adaptive fuzzy logic controller (3) for nonlinear MIMO systems (2) with subsystems which comprise fuzzification, inference, and output processing, which comprise both type reduction and defuzzification, and which provide stability of a resulting closed-loop system, the adaptive fuzzy logic controller (3) including: (i) inference engine identifying relationships using a rule base and outputs as 'fuzzy sets' to a type reducer, and (ii) output control demands including torque actuators to the fuzzyfier 'fuzzyfiying' the signal, and the fine tuning assembly (4) being such that it comprises: a. inputs from the coarse tuning assembly (1, 2, 3), b. pre-cognition horizons determining how many future samples the objective function considers for minimization and the length of the control

[Continued on next page]

WO 2014/147361 A1

Published:

— *with international search report (Art. 21(3))*

sequence computed, c. a linearized MIMO regression model extracted from the adaptive fuzzy logic controller (3) at each time step providing the 'fine' tuning parameters, and d. a non-linear dynamic linearized regression controller (4a) providing: (I) a crisp output signal feeding into APACC synthesis (4b) computing the optimal future vehicle guidance, navigation and control sequence, and (II) reduced set output and APACC synthesis (4b) feeding into the APACC linear logic system.

APPARATUS FOR CONTROLLING A LAND VEHICLE WHICH IS SELF-DRIVING OR PARTIALLY SELF-DRIVING

This invention relates to control apparatus and, more especially, this invention relates to apparatus for controlling a land vehicle which is self-driving or partially self-driving.

The realisation of self-driving or partially self-driving vehicles is complex, depending on the level of human driver involvement. Requirements include support of lane-keeping and warning systems, adaptive cruise control, back-up alerts, and parking assistance. Advanced driver assist systems (ADAS), light detection and ranging (LIDAR) and dedicated short-range communication (DSRC) in real time vehicle to vehicle communication are just some of the known technologies under development. These technologies are designed to enable cars to compute the three-dimensional geometry of any situation in real time from images and respond to their surroundings. ADAS for example uses a combination of advanced sensors, such as stereo cameras and long range and short range RADAR, combined with actuators, control units, and integrating software.

Hitherto, the fusion of available sensors and artificial intelligence has not been capable of "seeing" and understanding the vehicle's surroundings as accurately as a human being can. Artificial intelligence could not provide that

level of inferential thinking, nor could it communicate in real time with the environment. It was understood that convergence of these sensor and connectivity technologies would increase the inputs that are available for decision making and reduce the need for more sophisticated artificial intelligence.

Model predictive control (MPC) is an optimization-based control strategy that is considered extremely attractive in vehicle autonomous driving scenarios. For example, with respect to an MPC solution, APACC, increases fuel economy using data including sensor, driver behaviour and traffic data and a model predictive controller.

Safe self-driving vehicles have already been built. Google as well as traditional automakers and suppliers have developed self-driving functionality using sensor-based solutions and have a host of new applications in the pipeline. At the same time, a number of organizations, including automotive and high-tech companies and the USDOT, have been focused on the potential for using connected vehicle communication technologies for collision avoidance and traffic management.

Converging sensor-based technologies and connected-vehicle communications supported by advanced control schemes is needed to enable truly autonomous vehicles. However in the last half decade or so, of the advanced control schemes, only linear model predictive control (MPC) has been used in vehicle autonomous driving. The fundamental idea behind all MPC techniques is to rely on predictions of a plant model to compute the optimal future control sequence by minimization of an objective function. MPC

models include controlled variables, manipulated variables and disturbance (perturbation) variables. At each sampling instant, the optimisation performed based on new measurement data, and the first control input of the sequence is applied. The remainder of the sequence is discarded and the process is repeated at the next sampling instant in a "receding horizon" manner.

Whilst MPC has its origins in the chemical process industries, there is increasing interest in its application to vehicle autonomous driving, including support of lane-keeping and warning systems, adaptive cruise control, back-up alerts, and parking assistance. Essentially, the application of MPC builds upon the ideas of fuel and time optimal speed planning by bringing the optimisation onboard, providing a natural framework for increased autonomy and reconfiguration, whilst accounting for physical and operational constraints such as finite control authority, passive safety and collision avoidance. Furthermore other improvements are possible such as journey planning that could not otherwise have been known.

Generalized predictive control (GPC) and its derivatives have received special attention. Particularly the ability of GPC to be applied to unstable or time-delayed MIMO systems in a straight forward manner and the low computational demands for static models make it useful for many different kinds of tasks. Systems behaving unexpectedly, human factors, failures and the environment are all factors that contribute to non-linear plant dynamics. The drawback with MPC is that this method is limited to linear models. If nonlinear dynamics are present in the plant, a linear model might not yield sufficient predictions for MPC techniques to function adequately.

The two most general approaches to closed loop identification are direct approach and indirect approach. The direct approach ignores the presence of feedback, and directly identifies the plant by plant input and output data. This has the advantage that no knowledge about the type of control feedback or even linearity of the controller is required. The indirect approach identifies the closed loop, and obtains the open loop model by deconvolution if possible. Obtaining the open loop model is only possible if the controller is known and both the closed loop plant model and the controller are linear.

The control of multivariable multi-input multi-output (MIMO) systems is a common problem in practical vehicle to vehicle and from vehicle to infrastructure communication. Connected-vehicle systems use wireless technologies to communicate in real time. Most existing approaches deal only with uncertainties in driver behaviour and the environmental, assuming that an exact model of the actuators is available. This assumption is rarely satisfied in practice because the actuator parameters may also have uncertainties due to input faults such as mechanical and electrical parts, etc. Adaptive control with actuator uncertainty is not considered, even though this uncertainty results in significant degeneration of controller performance.

It is an aim of the present invention to reduce the above mentioned problems.

Accordingly, in one non-limiting embodiment of the present invention there is provided apparatus for controlling a land vehicle which is self-driving

or partially self-driving, which apparatus comprises a coarse tuning assembly and a fine tuning assembly,

the coarse tuning assembly being such that it comprises:

a. a sensor interface which measures kinematic parameters including speed and braking,

b. fuzzy descriptions to model guidance, navigation and control of the vehicle, the fuzzy descriptions including:

(i) driver behaviour and driving dynamics,

(ii) uncertainties due to the environment including weather, road conditions and traffic, and

(iii) input faults including mechanical and electrical parts,

c. an adaptive fuzzy logic controller for nonlinear MIMO systems with subsystems which comprises fuzzification, inference, and output processing, which comprise both type reduction and defuzzification, and which provide stability of a resulting closed-loop system, the adaptive fuzzy logic controller including:

(i) inference engine identifying relationships using a rule base and outputs as 'fuzzy sets' to a type reducer, and

(ii) output control demands including torque actuators to the fuzzyfier 'fuzzyfiying' the signal,

and the fine tuning assembly being such that it comprises:

a. inputs from the coarse tuning assembly,

b. precognition horizons determining how many future samples the objective function considers for minimization and the length of the control sequence computed,

c. a linearized MIMO regression model extracted from the adaptive fuzzy logic controller at each time step providing the 'fine' tuning parameters, and

d. a non-linear dynamic linearized regression controller providing:

(i) a crisp output signal feeding into APACC synthesis computing the optimal future vehicle guidance, navigation and control sequence, and

(ii) reduced set output and APACC synthesis feeding into the APACC linear logic system.

The apparatus may be one which includes a synchronization assembly which optimises the input signal to the output signals, and which comprises cascaded diophantine frequency synthesis (DFS) means which predicts future stabilization output parameters of the vehicle.

The use of neural networks for system identification is a relatively new approach as is fuzzy logic.

The apparatus of the present invention may be regarded as providing artificial precognition (AP) using adaptive (model) cognized control (APACC). The APACC improves upon model predictive control (MPC). Using very complex algorithms, APACC provides a significant level of inferential thinking and realtime communication. With the fusion of available sensors, APACC provides the capability of "cognizing" the vehicle's surroundings giving a genuine 'perception' of the external environment. This goes far beyond what has until now been possible by going some way to toward mimicking the way humans use a combination of stored memories and sensory input to interpret events as they occur and anticipate (cognize) likely scenarios.

Embodiments of the invention will now be described solely by way of example and with reference to the accompanying drawings in which:

Figure 1 shows APACC in vehicle autonomous driving;

Figure 2 shows a computer hardware core system for artificial precognition using APACC in vehicle autonomous driving; and

Figure 3 shows Intel® Xeon® processor high performance computing for APACC in vehicle autonomous driving.

Referring to the drawings, non-linear vehicle autonomous driving dynamics can be characteristically 'fuzzy' with a high degree of non-linearity. APACC feeds the instantaneous linearization of a nonlinear model with the 'Cognized' output of a fuzzy logic circuit (fuzzyifier in Figure 2) in each sampling instant. It is similar to GPC in most aspects except that the

instantaneous linearization of the fuzzy logic circuit output yields an adaptive linear regression model.

A key benefit of fuzzy logic is that it lets the designer describe the desired system behaviour with simple 'if-then' relations. In many applications, this gets a simpler solution in less design time. In addition, the designer can use all available engineering know-how to optimise the system performance directly. While this is certainly the beauty of fuzzy logic, it has also been a major limitation. In many applications, knowledge that describes desired system behaviour is contained in data sets. Here the designer has had to derive the 'if-then' rules from the data sets manually, which requires a major effort with large data sets. When data sets contain knowledge about the system to be designed, a neural net promises a solution because it can train itself from the data sets.

While neural nets are at advantage by learning from data sets, these have inherent disadvantages; for instance, the cause for a particular behaviour cannot be interpreted, nor can a neural net be modified manually to change to a certain desired behaviour. Also, selection of the appropriate net model and setting the parameters of learning algorithm are difficult and require much experience. On the other hand, fuzzy logic solutions are easy to verify and optimise. The present invention utilises a fuzzy logic controller that automates rule derivation eliminating the need to perform this function manually to predict plant dynamics instantaneously.

Fuzzy control methodologies have emerged in recent years as promising ways to approach nonlinear control problems. Fuzzy control, in

particular, has had an impact in the control community because of the simple approach it provides to use heuristic control knowledge for nonlinear control problems. In very complicated situations, where the plant parameters are subject to perturbations or when the dynamics of the systems are very complex, adaptive schemes have to be used online to gather data and adjust the control parameters automatically. However, no stability conditions have been provided so far for these adaptive approaches. APACC introduces two components into its adaptive fuzzy control scheme. One is a fuzzy logic system for coarse tuning. The other is the instantaneous linearization of the fuzzy logic circuit output which yields an adaptive linear model. This acts as a kind of robust compensator, such as supervisory control, sliding-mode control, for the fine tuning.

Recently, several stable adaptive fuzzy control schemes have been developed for multiple-input-multiple-output (MIMO) nonlinear systems. However, these adaptive control techniques are only limited to the MIMO nonlinear systems whose states are assumed to be available for measurement. In many practical situations, state variables are often unavailable in nonlinear systems. Thus, the output feedback or APACC adaptive fuzzy control is required for such complicated applications. The fuzzy control system controls the MIMO system and maintains the system stability. The coarse and fine tuning improves system performance by reducing the impact of external perturbations, guaranteeing closed-loop stability.

APACC coarse and fine tuning are applied to control the full or partial autonomous driving of a land vehicle, for example a car. They are applied to 3D scene reconstruction; kinematic variables such as speed, braking and those provided by tyre sensors and actuator input uncertainties, to instantaneously cognize possible 3D scene constructions/kinematic/actuator parameters.

Non-adaptive passive methods applied to vehicle autonomous driving assume uncertainties in the 'linear' (e.g. kinematic terms) and also the 'non-linear' (e.g. driver behaviour, environmental, input faults in mechanical and electrical parts) and that an exact model of the actuators is available.

There are three levels of schematic as shown in Figure 1. In-vehicle camera, sensors, ADAS, LIDAR and DSRC in vehicle to vehicle and vehicle to infrastructure technologies shown in Figure 1 generate specific real-time vehicular data. This vehicular data is combined with actuators, control units, and integrating software, to enable cars to monitor and respond to their surroundings. These sensor-based, driver-assisted solutions, using 3D or stereo cameras can compute the three-dimensional geometry of any situation in front of a vehicle in real time from the images it sees. The vehicular data is combined in real-time with driver behaviour, environmental (e.g. weather, road condition, traffic) maps and images stored in a high performance computing (HPC) data centre. This provides a 'perception' of the external environment; the fusion of available sensors and APACC provides the capability of "cognizing" the vehicle's surroundings. This simulates the way humans use a combination of stored memories and sensory input to interpret

events as they occur and anticipate likely scenarios. Using very complex algorithms, APACC provides a level of inferential thinking and real-time communication.

Figure 2 shows how APACC is used for vehicle autonomous driving. The design in controlling vehicle dynamics requires sensors, actuators and algorithms to command the actuators based on (1) sensor measurements of the vehicles current dynamics and (2) specification of a desired dynamics.

The fully and partially autonomous vehicle has an output corresponding to automatic dynamic motion of as a consequence of the application of APACC. The essential components for artificial precognition are embedded as subsystems within a high performance computer hardware core system datacenter implementation 1 shown in Figure 2. The detailed implementation of the core system is shown in Figure 2. The inputs include perturbations to the vehicle. The inputs will include a great number of variables including kinematic variables such as speed, braking and those provided by tyre sensors and actuator input uncertainties. Input/output is managed by a multivariable multi-input multi-output (MIMO) subsystem 2 as shown in Figure 2. The sensor deltas are measured by sensors through a sequential control process which comprises feedback measurement (feedback elements) and a comparator that compares the differential between the input and output signals. The MIMO subsystem 2 is driven to different operating states using set points which are added to the input signal at the comparator. The actual excitation signal amplitude has to be as large as possible to ensure maximal excitation around each set point. APACC

instantaneously compensates the error between the actual and cognized (possible and probable) outputs (e.g. throttle control and steering) to provide car dynamic stability. This error is shown in the MIMO subsystem 2 as being fed into a controller which provides control outputs to actuators. The sensor actuator applies the mechanical action needed to change vehicle direction or speed.

The coarse tuning is provided by the adaptive fuzzy logic controller 3 shown in Figure 2. It has been developed for nonlinear MIMO systems involving external perturbations using fuzzy descriptions to model car guidance, navigation and control. The adapative fuzzy logic controller is a Type-2 fuzzy logic system involving the operations of fuzzification, inference, and output processing. The sensor actuators output control demands to the fuzzyfier which 'fuzzyfies' the signal. There are variables (mentioned above) within the inputs that are closely correlated, and they will have high mutual information. However, there are other pairs of variables that are related that will have low correlation, but high mutual information. The coarse tuning radically speeds up the cognition process making it possible to make virtually instantaneous dynamic correction possible. The inference engine identifies these relationships using the rule base and outputs these as 'fuzzy sets' to the type reducer. The adaptive fuzzy logic controller provides "output processing" and comprises both type reduction and defuzzification.

Type reduction (reduced set) captures more information about rule uncertainties than does the defuzzified value (a crisp number), however, it is computationally intensive. The advantage is that it can cognize unpredicted

perturbations -data uncertainties. The adaptive fuzzy controller can perform successful control and guarantee that the global stability of the resulting closed-loop system and the tracking performance can be achieved.

The adaptive fuzzy logic controller output processing is fed into a non-linear dynamic linearized regression controller 4 shown in Figure 2, and which provides fine tuning. the crisp output signal feeds into APACC synthesis. The reduced set output and the APACC synthesis feed into the APACC linear logic system. The linearized MIMO regression model that is extracted from the fuzzy logic controller at each time step is used to provide the 'fine' tuning parameters. Non-linear dynamic linearized regression controller computes the optimal future guidance, navigation and control sequence according to the objective function. Two 'precognition horizons' determine how many future samples the objective function considers for minimization and the length of the control sequence that is computed. As is common in most MPC methods, a receding horizon strategy is used and thus only the first control signal that is computed is actually applied to the vehicle systems to achieve loop closure.

Synchronization optimization of the input signal to the output signals is achieved using cascaded diophantine frequency synthesis (DFS) implemented using two or more phase lock loops (PLL). The DFS is DFS 5 in Figure 2. The DFS 5 is used to predict future outputs of continuous-time, infinite-dimensional, time-varying and non-linear systems. Its primary function is to parameterize vehicle stabilization factors and lock them into a continuous feedback loop.

The APACC for guidance, navigation and control (GNC) of the land vehicle requires the virtually instantaneous analysis of enormous data volumes. To achieve this, the convey high performance computing (HPC) architecture from Intel® was selected for APACC vehicle autonomous driving. Convey computer's approach provides very fast access to random access to memory, and is very useful for the complex functions used in APACC.

The architecture is based on Intel® Xeon® processor shown in Figure 3. The architecture features a highly parallel memory subsystem to further increase performance. Programmable "on the fly," FPGAs are a way to achieve hardware-based, application-specific performance. Particular APACC- GNC algorithms, for example, are optimized and translated into code that is loaded onto the FPGAs at runtime.

An in-vehicle camera, sensors, ADAS, LIDAR and DSRC in vehicle to vehicle and vehicle to infrastructure technologies present inputs to APACC for fully or partial vehicle autonomous driving.

The APACC assembly comprises:

a. sensors measuring vehicle dynamics:

(i) input surfaces locally exposed to vehicle perturbations, and

(ii) input parameters include kinematic and those provided by tyre sensors and actuator input uncertainties,

b. actuators applying operations including steering, throttle and braking to change vehicle vectors, and

c. algorithms commanding the actuators based on (1) sensor measurements of the current vector and (2) specification of a desired vector.

The APACC mimics the way humans use a combination of stored memories and sensory input to interpret events as they occur and anticipate (cognize) likely scenarios.

The multivariable multi-input multi-output (MIMO) subsystem 2 comprises a sensor assembly essentially comprising a sequential control process measuring feedback and a comparator comparing the differential between the input and output signals. The MIMO subsystem 2 operates as follows.

a. The MIMO subsystem 2 is driven to different operating states using set points added to the input signal at the comparator.

b. APACC instantaneously compensates the error between the actual and cognised (possible and probable) outputs including throttle control and steering providing car dynamic stability.

c. To ensure maximal excitation around each set point, the excitation signal amplitude is maximized.

d. The error is fed into the controller providing control outputs to sensor actuators providing the mechanical action needed to change vehicle direction or speed.

The high performance computing (HPC) architecture provides very fast access to random access to memory for virtually instantaneous analysis of enormous data volumes for car guidance, navigation and control.

It is to be appreciated that the embodiments of the invention described above with reference to the accompanying drawings have been given by way of example and with reference to the accompanying drawings. Individual components shown in the drawings are not limited to use in their drawings and they may be used in other drawings and in all aspects of the invention.

CLAIMS

1. Apparatus for controlling a land vehicle which is self-driving or partially self-driving, which apparatus comprises a coarse tuning assembly and a fine tuning assembly,

the coarse tuning assembly being such that it comprises:

a. a sensor interface which measures kinematic parameters including speed and braking,

b. fuzzy descriptions to model guidance, navigation and control of the vehicle, the fuzzy descriptions including:

(i) driver behaviour and driving dynamics,

(ii) uncertainties due to the environment including weather, road conditions and traffic, and

(iii) input faults including mechanical and electrical parts, and

c. an adaptive fuzzy logic controller for nonlinear MIMO systems with subsystems which comprise fuzzification, inference, and output processing, which comprise both type reduction and

defuzzification, and which provide stability of a resulting closed-loop system, the adaptive fuzzy logic controller including:

(i) inference engine identifying relationships using a rule base and outputs as 'fuzzy sets' to a type reducer, and

(ii) output control demands including torque actuators to the fuzzyfier 'fuzzyfiying' the signal,

and the fine tuning assembly being such that it comprises:

a. inputs from the coarse tuning assembly,

b. precognition horizons determining how many future samples the objective function considers for minimization and the length of the control sequence computed,

c. a linearized MIMO regression model extracted from the adaptive fuzzy logic controller at each time step providing the 'fine' tuning parameters, and

d. a non-linear dynamic linearized regression controller providing:

(i) a crisp output signal feeding into APACC synthesis computing the optimal future vehicle guidance, navigation and control sequence, and

(ii) reduced set output and APACC synthesis feeding into the APACC linear logic system.

2. Apparatus according to claim 1 and including a synchronization assembly which optimizses the input signal to the output signals and which comprises cascaded diophantine frequency synthesis (DFS) means which predicts future stabilization output parameters of the vehicle.

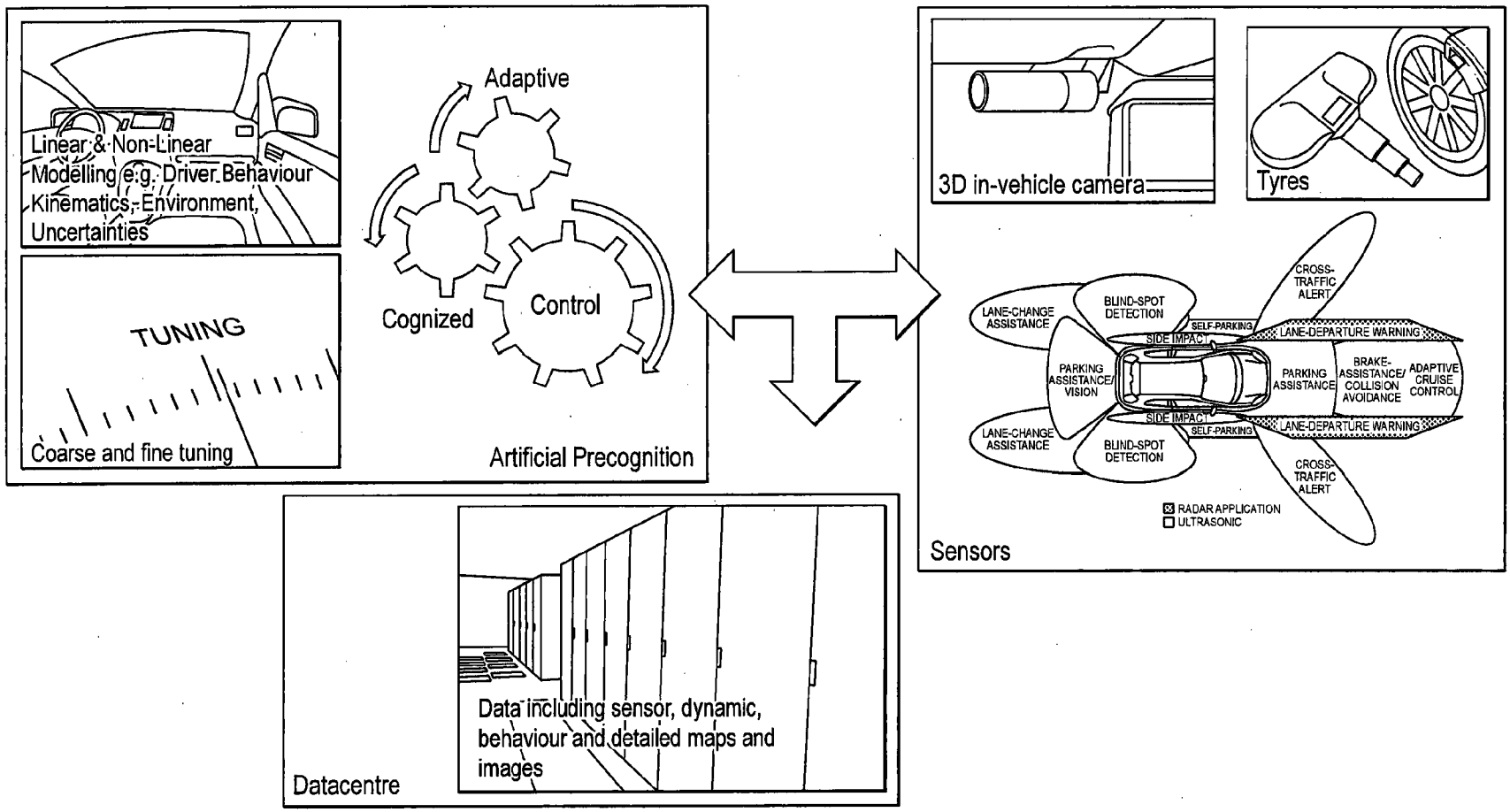
Linear & Non-Linear
Modelling e.g. Driver Behaviour
Kinematics, Environment,
Uncertainties
TUNING
Coarse and fine tuning
Adaptive
Cognized
Control
Artificial Precognition
3D in-vehicle camera
Tyres
CROSS-TRAFFIC ALERT
LANE-CHANGE ASSISTANCE
BLIND-SPOT DETECTION
SELF-PARKING
SIDE IMPACT
LANE-DEPARTURE WARNING
PARKING ASSISTANCE/ VISION
PARKING ASSISTANCE
BRAKE-ASSISTANCE/ COLLISION AVOIDANCE
ADAPTIVE CRUISE CONTROL
RADAR APPLICATION
ULTRASONIC
Sensors
Data including sensor, dynamic, behaviour and detailed maps and images
Datacentre

FIG. 1

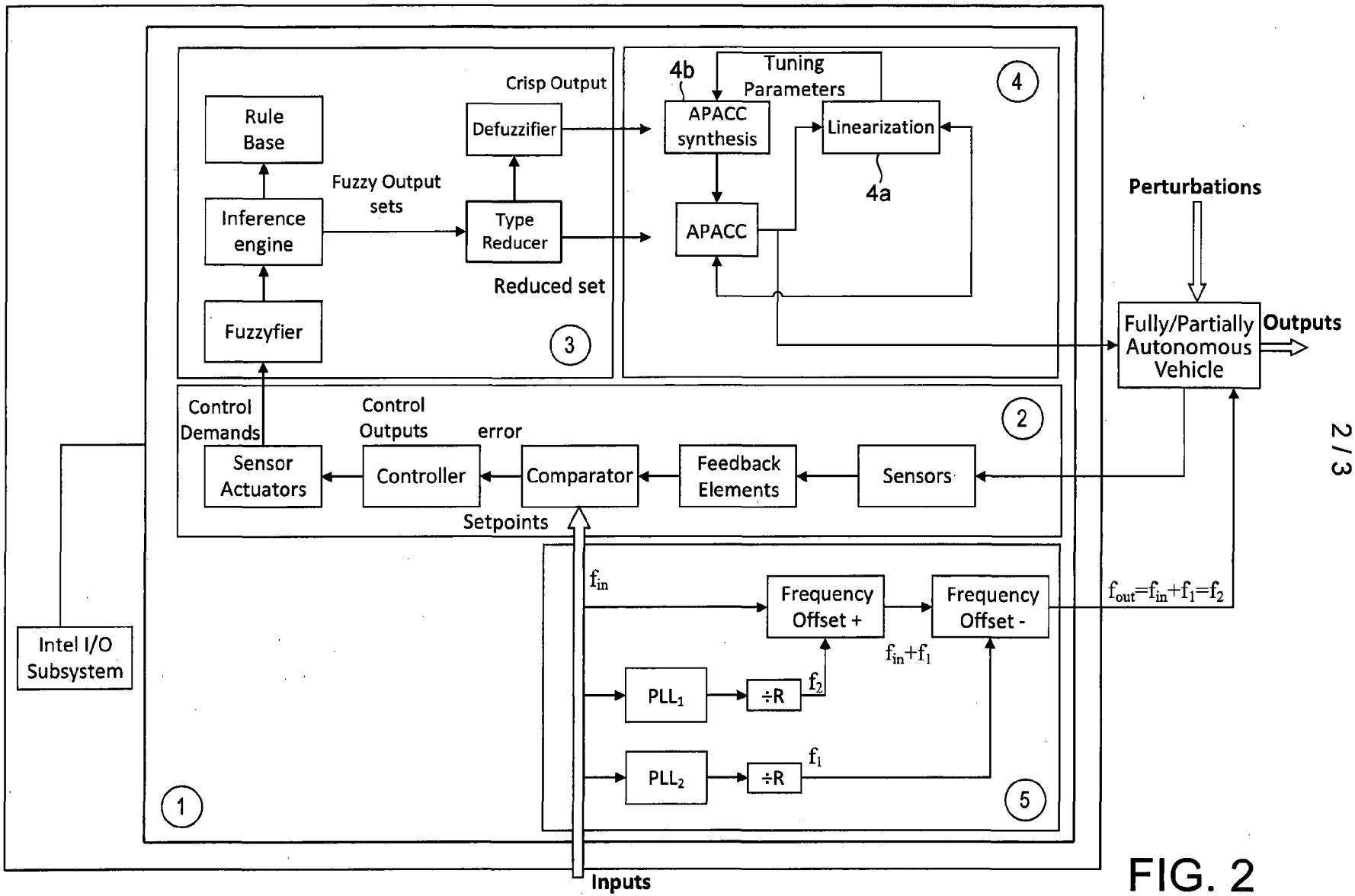
Rule Base
Inference engine
Fuzzyfier
Fuzzy Output sets
Type Reducer
Defuzzifier
Crisp Output
Reduced set
3
4b
Tuning Parameters
APACC synthesis
Linearization
4a
APACC
4
Perturbations
Fully/Partially Autonomous Vehicle
Outputs
Control Demands
Control Outputs
error
Sensor Actuators
Controller
Comparator
Feedback Elements
Sensors
2
Setpoints
Intel I/O Subsystem
1
f_{in}
Frequency Offset +
Frequency Offset -
$f_{out}=f_{in}+f_1=f_2$
$f_{in}+f_1$
PLL_1
÷R
f_2
PLL_2
÷R
f_1
5
Inputs

FIG. 2

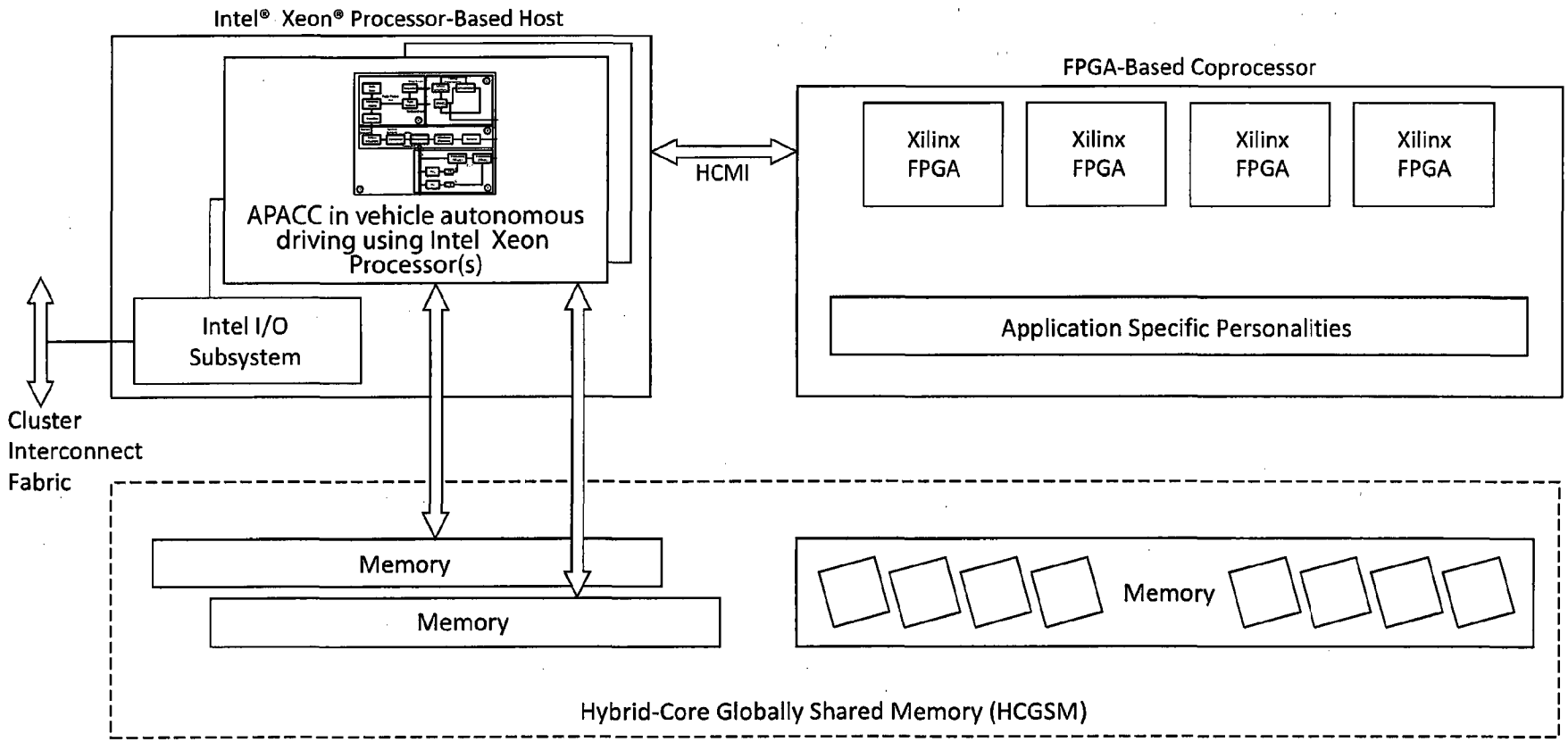

FIG. 3

IPR2025-01034
Tesla EX1002 Page 1903

INTERNATIONAL SEARCH REPORT

International application No
PCT/GB2014/000088

A. CLASSIFICATION OF SUBJECT MATTER

INV. B60W30/12 B60W30/16
ADD. B60W50/00 B60W30/18 G05D1/02

According to International Patent Classification (IPC) or to both national classification and IPC

B. FIELDS SEARCHED

Minimum documentation searched (classification system followed by classification symbols)

B60W G05D

Documentation searched other than minimum documentation to the extent that such documents are included in the fields searched

Electronic data base consulted during the international search (name of data base and, where practicable, search terms used)

EPO-Internal, WPI Data

C. DOCUMENTS CONSIDERED TO BE RELEVANT

Category*	Citation of document, with indication, where appropriate, of the relevant passages	Relevant to claim No.
A	US 2008/195293 A1 (NORRIS WILLIAM ROBERT [US] ET AL) 14 August 2008 (2008-08-14) paragraphs [0021] - [0025]	1
A	DE 198 28 924 C1 (SIEMENS AG [DE]) 2 June 1999 (1999-06-02) figure 1 the whole document	1
A	ZALILA Z ET AL: "LONGITUDINAL CONTROL OF AN AUTONOMOUS VEHICLE THROUGH A HYBRID FUZZY/CLASSICAL CONTROLLER", WESCON CONFERENCE, IEEE CENTER, HOES LANE, US, 27 September 1994 (1994-09-27), pages 118-124, XP000532569, ISSN: 1044-6036 the whole document	1

-/--

[X] Further documents are listed in the continuation of Box C.

[X] See patent family annex.

* Special categories of cited documents :

"A" document defining the general state of the art which is not considered to be of particular relevance

"E" earlier application or patent but published on or after the international filing date

"L" document which may throw doubts on priority claim(s) or which is cited to establish the publication date of another citation or other special reason (as specified)

"O" document referring to an oral disclosure, use, exhibition or other means

"P" document published prior to the international filing date but later than the priority date claimed

"T" later document published after the international filing date or priority date and not in conflict with the application but cited to understand the principle or theory underlying the invention

"X" document of particular relevance; the claimed invention cannot be considered novel or cannot be considered to involve an inventive step when the document is taken alone

"Y" document of particular relevance; the claimed invention cannot be considered to involve an inventive step when the document is combined with one or more other such documents, such combination being obvious to a person skilled in the art

"&" document member of the same patent family

Date of the actual completion of the international search	Date of mailing of the international search report
3 June 2014	18/06/2014
Name and mailing address of the ISA/ European Patent Office, P.B. 5818 Patentlaan 2 NL - 2280 HV Rijswijk Tel. (+31-70) 340-2040, Fax: (+31-70) 340-3016	Authorized officer Plenk, Rupert

Form PCT/ISA/210 (second sheet) (April 2005)

INTERNATIONAL SEARCH REPORT

International application No
PCT/GB2014/000088

C(Continuation). DOCUMENTS CONSIDERED TO BE RELEVANT

Category*	Citation of document, with indication, where appropriate, of the relevant passages	Relevant to claim No.
A	HYEOUN-DONG LEE ET AL: "Fuzzy-Logic-Based Torque Control Strategy for Parallel-Type Hybrid Electric Vehicle", IEEE TRANSACTIONS ON INDUSTRIAL ELECTRONICS, IEEE SERVICE CENTER, PISCATAWAY, NJ, USA, vol. 45, no. 4, 1 August 1998 (1998-08-01) , XP011023406, ISSN: 0278-0046 figure 6 the whole document -----	1

INTERNATIONAL SEARCH REPORT

Information on patent family members

International application No
PCT/GB2014/000088

Patent document cited in search report	Publication date	Patent family member(s)	Publication date
US 2008195293 A1	14-08-2008	NONE	
DE 19828924 C1	02-06-1999	DE 19828924 C1	02-06-1999
		WO 0000759 A1	06-01-2000

Form PCT/ISA/210 (patent family annex) (April 2005)

(12) INTERNATIONAL APPLICATION PUBLISHED UNDER THE PATENT COOPERATION TREATY (PCT)

(19) World Intellectual Property Organization
International Bureau

(43) International Publication Date
25 September 2014 (25.09.2014)

WIPO | PCT

(10) International Publication Number
WO 2014/148975 A1

(51) International Patent Classification:
G05D 1/00 (2006.01) *G05D 1/02* (2006.01)
B62D 1/28 (2006.01)

(21) International Application Number:
PCT/SE2014/050278

(22) International Filing Date:
6 March 2014 (06.03.2014)

(25) Filing Language: Swedish

(26) Publication Language: English

(30) Priority Data:
1350329-7 19 March 2013 (19.03.2013) SE

(71) Applicant: **SCANIA CV AB** [SE/SE]; SE-151 87 Södertälje (SE).

(72) Inventors: **ANDERSSON, Jon**; Engelsbergsvägen 89, SE-144 62 Rönninge (SE). **AH-KING, Joseph**; Mimervägen 3, SE-151 60 Södertälje (SE). **NYSTRÖM, Tom**; Heimdallsvägen 11, SE-151 60 Södertälje (SE).

(74) Agent: **YOUSSEF, Maikel**; Scania CV AB, SE-151 87 Södertälje (SE).

(81) Designated States *(unless otherwise indicated, for every kind of national protection available)*: AE, AG, AL, AM, AO, AT, AU, AZ, BA, BB, BG, BH, BN, BR, BW, BY, BZ, CA, CH, CL, CN, CO, CR, CU, CZ, DE, DK, DM, DO, DZ, EC, EE, EG, ES, FI, GB, GD, GE, GH, GM, GT, HN, HR, HU, ID, IL, IN, IR, IS, JP, KE, KG, KN, KP, KR, KZ, LA, LC, LK, LR, LS, LT, LU, LY, MA, MD, ME, MG, MK, MN, MW, MX, MY, MZ, NA, NG, NI, NO, NZ, OM, PA, PE, PG, PH, PL, PT, QA, RO, RS, RU, RW, SA, SC, SD, SE, SG, SK, SL, SM, ST, SV, SY, TH, TJ, TM, TN, TR, TT, TZ, UA, UG, US, UZ, VC, VN, ZA, ZM, ZW.

(84) Designated States *(unless otherwise indicated, for every kind of regional protection available)*: ARIPO (BW, GH, GM, KE, LR, LS, MW, MZ, NA, RW, SD, SL, SZ, TZ, UG, ZM, ZW), Eurasian (AM, AZ, BY, KG, KZ, RU, TJ, TM), European (AL, AT, BE, BG, CH, CY, CZ, DE, DK, EE, ES, FI, FR, GB, GR, HR, HU, IE, IS, IT, LT, LU, LV, MC, MK, MT, NL, NO, PL, PT, RO, RS, SE, SI, SK, SM, TR), OAPI (BF, BJ, CF, CG, CI, CM, GA, GN, GQ, GW, KM, ML, MR, NE, SN, TD, TG).

Published:

— *with international search report (Art. 21(3))*

(54) Title: METHOD AND SYSTEM FOR CONTROL OF AUTONOMOUS VEHICLES

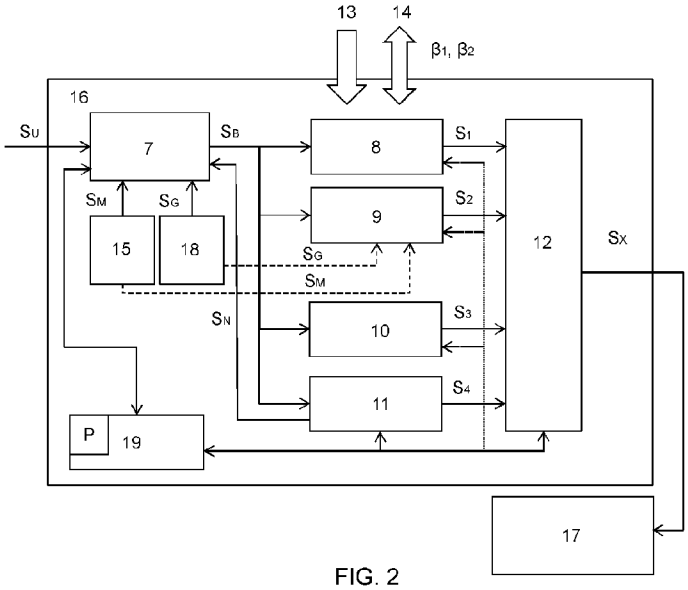

FIG. 2

(57) Abstract: The invention relates to a system for regulating an autonomous vehicle in a traffic system which comprises a plurality of autonomous vehicles. The system analyses the external information according to predetermined rules and generates analysis signals to the vehicle which are given different priorities depending on the particular analysis carried out and its results. A composite analysis signal S_x is determined on the basis of the contents of the analysis signals and their prioritisation. The vehicle may then adapt its regulation according to the composite analysis signal S_x. The invention relates also to a method for regulating an autonomous vehicle in a traffic system which comprises a plurality of autonomous vehicles.

WO 2014/148975 A1

Method and system for control of autonomous vehicles

Field of the invention

The present invention relates to techniques for handling various situations in traffic systems which comprise a plurality of autonomous vehicles.

Background to the invention

A vehicle which can travel on the ground without a driver is referred to as a driverless ground vehicle (unmanned ground vehicle, UGV). There are two types of driverless ground vehicles, those which are remote-controlled and those which are autonomous.

A remote-controlled UGV is a vehicle which is regulated by a human operator via a communication link. Each control action is determined by the operator either on the basis of direct visual observation or by using sensors such as digital video cameras. A simple example of a remote-controlled UGV is a remote-controlled toy car. A great variety of remote-controlled vehicles are now in use, often in dangerous situations and environments which are inappropriate for humans to be in, e.g. disarming of bombs and dealing with hazardous chemical discharges. Remote-controlled driverless vehicles are also used in surveillance operations and the like.

Autonomous vehicle means here a vehicle capable of navigating and manoeuvring without human control. Such a vehicle uses sensors to gain understanding of the surroundings. Sensor data are then used by regulating algorithms to determine the next step to be taken by the vehicle with respect to a superordinate objective set for it, e.g. collecting and delivering goods at different locations. More specifically, an autonomous vehicle has to be able to read the surroundings well enough to be able to perform the assignment set for it, e.g. “move blocks of stone from point A to point B via mine adit C”. The autonomous vehicle needs to plan and follow a route to the chosen destination while at the same time detecting and avoiding obstacles on the way. It has also to perform its

assignment as quickly as possible without making mistakes. Autonomous vehicles have inter alia been developed for potential use in dangerous environments, e.g. in the military and defence industry and the mining industry, both above and below ground. Any people or ordinary manually controlled vehicles approaching the area where autonomous vehicles operate will normally cause interruption of the operation of the autonomous vehicles for safety reasons. When their operating area becomes clear again, the autonomous vehicles may be ordered to resume operating.

An autonomous vehicle uses information about the road, the surroundings and others aspects which affect its operation, in order to automatically regulate its power mobilised, braking and steering. Accurate assessment and identification of the planned route ahead is necessary for assessing whether a road is negotiable and for being able to successfully replace human judgement in operating the vehicle. Road conditions may be complex and when driving an ordinary driver-controlled vehicle the driver will make hundreds of observations per minute and adjust the operation of the vehicle on the basis of the road conditions perceived, e.g. to find a feasible way past any objects which may be on the road. Using an autonomous system to replace human perception entails inter alia being able accurately to perceive objects to make it effectively possible to regulate the vehicle so that it is directed past them.

The technical methods used for identifying an object close to a vehicle comprise inter alia using one or more cameras and radar to create images of the surroundings. Laser techniques are also used, both scanning lasers and fixed lasers, to identify objects and measure distances. These techniques are often called LIDAR (light detection and ranging) or LADAR (laser detection and ranging). In addition, various sensors on board the vehicle are used inter alia to detect its speed and accelerations in different directions. Positioning systems and other wireless technologies may also be used to determine whether the vehicle is

for example approaching an intersection, a narrower stretch of road and/or other vehicles.

The human ability to conform both to traffic rules and to traffic culture needs to be emulated by the control systems of autonomous vehicles. For example, a driver of an ordinary vehicle will usually avoid a crash instinctively before complying with speed limits. The traffic perception of today's autonomous vehicles is usually confined to "stopping if anything comes close or enters my operating area". To be able to take many different parameters into account, the autonomous vehicle needs to know which one or more of them are the most important.

US-8103438-B2 describes a method and a system for automatically controlling traffic in an operating area. Manned vehicles are given different priorities depending for example on how heavy they are and what kind of road they are on. In the event of conflict, the priorities of the vehicles are compared and a vehicle with lower priority has to give way to a vehicle with higher priority.

US-7979174-B2 refers to automatic planning and regulation of the speed of autonomous vehicles. Their speed planning is conducted on the basis of a number of restrictions with different prioritisations, e.g. avoiding collisions is a higher priority than complying with speed limits.

For a whole transport system comprising many autonomous vehicles mixed with, for example, manually controlled vehicles and pedestrians to be able to function sustainably in conjunction, improved methods are needed for taking many different parameters and assignments into account while at the same time enabling the autonomous vehicles to achieve most efficiently their set objectives.

The object of the invention is therefore to propose an improved method for assisting an autonomous vehicle to make decisions where it has to take a number of different factors into account.

Summary of the invention

One aspect of the invention achieves the object by a system for regulating an autonomous vehicle in a traffic system comprising a plurality of autonomous vehicles according to the first independent claim. The system analyses external information according to predetermined rules and generates analysis signals to the vehicle which are given different priorities depending on the particular kind of analysis and its results. A composite analysis signal S_x is determined on the basis of the content of the analysis signals and their prioritisation. The vehicle can adapt its regulation on the basis of the composite analysis signal S_x.

This system makes it possible for transport operations within it to be consistently conducted in the most efficient way, not only by avoiding collisions and conforming to traffic rules but also by continuously ensuring that all parts of the traffic system cooperate towards the objectives indicated. The autonomous vehicle will know in each situation how to act so that its operation will be safe and efficient for the whole traffic system.

Another aspect achieves the object by a method for regulating an autonomous vehicle in a traffic system which comprises a plurality of autonomous vehicles.

A third aspect achieves the object with a computer programme product which comprises programme instructions for enabling a computer system to perform steps according to the method.

The vehicles herein described are preferably autonomous but may also in one embodiment be partly controllable manually. They are each aware of where the others are, and what they are doing, by communication between them and between them and management centres. An autonomous vehicle may in one embodiment also detect unconnected other road-users in motion within the traffic area and convey this to the management centre and the other vehicles.

Preferred embodiments are defined by the dependent claims.

Brief description of drawings

Figure 1 illustrates a traffic system with a plurality of autonomous vehicles.

Figure 2 depicts a system for regulating an autonomous vehicle in a traffic system according to an embodiment of the invention.

Figure 3 is a flowchart for a method according to an embodiment of the invention.

Detailed description of preferred embodiments to the invention

Figure 1 depicts schematically three autonomous vehicles 2, 3 and 4 travelling along a road. The arrows in the vehicles represent their respective directions of movement. These vehicles can communicate with a management centre 1 by, for example, V2I (vehicle-to-infrastructure) communication 5 and/or with one another by, for example, V2V (vehicle-to-vehicle) communication 6. This communication is wireless and may for example take place by WLAN (wireless local area network) protocol IEEE 802.11, e.g. IEEE 802.11p, although other forms of wireless communication are also conceivable. The management centre 1 organises the autonomous vehicles 2, 3 4 and gives them assignments to perform. When an autonomous vehicle has received an assignment, it can independently see to it that it is duly performed. It may for example take the form of an instruction to collect goods at a freight collection point A. The vehicle is then able to determine its current location, determine a route thence to point A, and go there. On the way it also needs to be able to avoid obstacles and to allow for other autonomous vehicles which may possibly be on more important assignments and have to be given precedence. While on its current assignment, the vehicle may also receive a new assignment which is to be prioritised over the current one. In a manned vehicle the driver will take these decisions continuously while on the move. An autonomous vehicle needs predetermined rules on how to prioritise in different situations which may arise, in order to be able to direct itself in the most efficient way for the whole traffic system.

Figure 2 illustrates a system 16 according to an embodiment of the invention for regulating an autonomous vehicle in a traffic system which comprises a plurality of

autonomous vehicles. The vehicle may for example be one of the autonomous vehicles depicted in Figure 1 and referred to as 2, 3 or 4. The system 16 may be situated entirely in the autonomous vehicle or in the management centre 1, or partly in the vehicle and partly in the management centre. The system will now be explained with reference to Figure 2. It comprises a route unit 7 adapted to receiving an assignment signal S_U which conveys to the vehicle an assignment comprising information about at least one destination for it. The assignment preferably comes from the management centre 1. It may for example comprise destination information in the form of GPS coordinates. The route unit is further adapted to determining at least partly a route for the vehicle to follow in order to reach said destination on the basis of at least the destination information, and to generating a route signal S_B which indicates the route. The route unit 7 may for example receive map information from an external map unit 15 via a map signal S_M, and location information from a location determination unit 18 via a location signal S_G. This may be by satellite positioning (global navigation satellite system, often shortened to GNSS) in cases where the system 16 is used outdoors. GNSS is a composite name for a group of worldwide navigation systems which receive signals from a constellation of satellites and pseudosatellites to make it possible to provide location input for a receiver. The American GPS system is the best-known GNSS system, but there are also others such as the Russian GLONASS and the future European Galileo. The vehicle's location may also be determined by monitoring the signal strength from two or more wireless network (WiFi) access points in the vicinity. Another way of determining the vehicle's location is to measure the rotation speed of its wheels and use their circumference to determine how far the vehicle has travelled. In conjunction with knowing the vehicle's direction, its location relative to a map can be determined. It is thus possible to know at any time where the vehicle is.

The system 16 further comprises a plurality of analysis units 8, 9, 10, 11 adapted to receiving external information 13 along the route. This external information is represented schematically by an arrow 13 into the system 16 and may for example comprise further assignments from the management centre 1,

information from sensors on board the vehicle, information by V2V from other vehicles, information by V2I from, for example, traffic lights, speed limit signs etc. The analysis units 8, 9, 10, 11 are adapted to analysing the external information 13 at least according to predetermined rules and to determining and generating analysis signals S_1, S_2, S_3, S_4 for the analysis units 8, 9, 10, 11 on the basis of the results of the analyses.

In one embodiment the analysis units comprise a collision unit 8, a navigation unit 9, a cooperation unit 10 and/or an assignment unit 11. An analysis unit may be adapted to receiving external information 13 in the form of sensor signals from various sensors on board the autonomous vehicle, e.g. cameras, lasers (e.g. LIDAR or LADAR), radar, speed sensors, acceleration sensors, and information about other vehicles or obstacles by V2V and/or V2I communication. The external information may also comprise a new assignment for the vehicle or other information from the management centre 1. This external information may then be used by the various analysis units 8, 9, 10, 11 in different ways, as explained in more detail below.

The collision unit 8 is adapted to using the external information 13 to anticipate a risk of collision with another vehicle or object along the route indicated by the route signal S_B. In one embodiment the collision unit is adapted to analysing the external information on the basis of rules for the risk of collision with the host vehicle. The risk of collision may thus be evaluated continuously. The external information is therefore analysed according to predetermined rules and an analysis signal S_1 is determined for the collision unit on the basis of the results of the analysis. This signal indicates for example whether there is risk of collision. It may in one embodiment also comprise instructions indicating how the vehicle should be directed to avoid an obstacle, e.g. by speed reduction, avoidance, coming to a halt or taking a different route. If there is no risk of collision, this is also indicated by the analysis signal S_1 in one embodiment.

The navigation unit 9 may use the external information 13 to ensure that the vehicle does not break any traffic rules and/or that it finds the nearest way to its assignment while travelling along the route indicated by the route signal S_B. The traffic rules may differ depending on the kind of environment in which the traffic system is. There may for example be different traffic rules in a mine and in ordinary civil traffic. In one embodiment the navigation unit is adapted to analysing the external information on the basis of traffic rules and/or in order to find the nearest way to reach the assignment. Traffic rules may for example comprise a maximum number of vehicles on a stretch of road or maximum and minimum speeds for the autonomous vehicle. The navigation unit may receive map information from the map unit 15 via a map signal S_M and location information from a location determination unit 18 via a location signal S_G, both signals being represented by broken lines in Figure 2, in order to be able to determine the nearest way for performing the assignment. Combining the need to conform to traffic rules and taking the nearest way makes it possible to achieve efficient operation in accordance with traffic rules. The navigation unit is adapted to determining and generating an analysis signal S_2 for the navigation unit on the basis of the results of the analysis. The analysis signal S_2 may for example indicate that the predetermined route indicated by the route signal S_B cannot be followed because of the traffic rules, or that it is not the nearest way. In one embodiment the navigation unit is adapted to determining a new route which conforms to the traffic rules and/or is the nearest way for performing the assignment. This may then be indicated by the analysis signal S_2. If there is no change in the length of the route on the basis of traffic rules and/or the vehicle is already on the nearest way, this is indicated by the analysis signal S_2 in one embodiment.

The cooperation unit 10 may use the external information 13 to ensure that the autonomous vehicle cooperates with other vehicles in the traffic system in a way which is efficient for the whole traffic system. In one embodiment the cooperation unit is adapted to analysing the external information on the basis of rules for cooperation with other road users. Cooperation involves both the individual

autonomous vehicles and the management centre 1 catering for the efficiency of the whole traffic system. The requirements for efficiency may differ from one traffic system to another and may be selected by the system's human supervisor. If two different heavy vehicles meet at a bottleneck, e.g. a tunnel or a mine adit with only one traffic lane, and the heavier of the two vehicles is travelling uphill, it may be more efficient that it takes precedence over the lighter vehicle which is travelling downhill. The cooperation unit may then be adapted to comparing parameters from the different vehicles, e.g. weight parameters. If a lone autonomous vehicle meets a vehicle train, it may be more efficient that the lone vehicle comes to a halt, even if it is heavier, but not if this leads to its being unable to move off again after the stoppage. In some situations one of the vehicles may instead reduce speed in good time to completely avoid any conflict. The cooperation unit is then adapted to determining and generating an analysis signal S_3 for the cooperation unit on the basis of the results of the analysis. This signal may for example indicate that cooperation is needed and/or what form of cooperation. If there is no need for cooperation, this is indicated by the analysis signal S_3 in one embodiment.

The external information 13 may in one embodiment comprise an external traffic management decision, e.g. for an autonomous vehicle to make its way out of a mine after the ending of an assignment because an accident has occurred. The traffic management decision will then also comprise a new assignment, viz. to make its way out of the mine to a predetermined location. In one embodiment the assignment unit 11 is adapted to analysing the external information 13 on the basis of rules for external traffic management decisions. The assignment unit is then adapted to determining and generating an analysis signal S_4 for the assignment unit on the basis of the results of the analysis. This signal may then comprise information about a new assignment having come in and, for example, destination information.

In difficult particular situations where there are no clear rules on how vehicles should act, e.g. how two vehicles should cooperate, the system 16 may ask a

management centre 1, possibly including a human supervisor, for advice with a view to reaching a decision. In one embodiment at least one of the analysis units 8, 9, 10, 11 is adapted to sending to a management centre 1 a query signal β_2 which conveys a query related to the external information 13. The query will then be processed at the management centre and a decision will be taken. It may for example be taken by a human supervisor or operator. The analysis unit is then adapted to receiving a decision signal β_2 which conveys the decision from the management centre, and to analysing the external information on the basis of the decision. Even difficult or complex situations in the system 16 may be handled in this way.

The system 16 further comprises a result unit 12 adapted to receiving analysis signals S_1, S_2, S_3, S_4. The result unit is adapted to relating a prioritisation to at least one analysis signal S_1, S_2, S_3, S_4 on the basis of which analysis units they come from and their contents. An analysis signal S_1 indicating no risk of collision will be given no priority. Similarly, an analysis signal S_2 indicating no need for any change will likewise be given no priority. An analysis signal S_3 indicating no need for cooperation will be given no priority. An analysis signal S_4 indicating no new assignment will be given no priority. If none of the analysis signals indicate any need to change from the current route, the vehicle will in one embodiment follow a specific route, e.g. S_B. In one embodiment the analysis signal S_1 from the collision unit 8 ranks highest, followed by the analysis signal S_3 from the cooperation unit 10, then the analysis signal S_2 from the navigation unit 9 and finally the analysis signal S_4 from the assignment unit 11. Any collision risk will thus always have the highest priority. A different prioritisation from that exemplified is nevertheless possible. The result unit is further adapted to determining a composite analysis signal S_x based on the contents of the analysis signals and any prioritisations of them. To determine a composite analysis signal S_x, the result unit is adapted to catering for the possibility of the vehicle for example avoiding a crash by travelling past an obstacle, cooperating with other vehicles, conforming to traffic rules and receiving a new assignment, without conflicting with any result from any other analysis unit. This analysis is conducted

by continuously comparing the contents of the various analysis signals S_1-S_4. The result unit is thus adapted to determining whether the vehicle can act according to whichever analysis signal S_1-S_4 has the highest prioritisation, without conflicting with any of the results of the other analysis units which have lower priorities.

If for example two vehicles are each moving towards their respective end of a narrow tunnel and the vehicle which has the lower prioritisation from the traffic system's perspective expects to be able to make its way through the tunnel before the higher-priority vehicle travelling in the opposite direction reaches the tunnel, the lower-priority vehicle will go right ahead. This may for example be indicated in the analysis signal S_3 to the effect that no cooperation is needed if the vehicle with less priority maintains a certain speed or reaches the tunnel within a particular time, etc. Just before the tunnel, however, the collision unit 8 detects an obstacle which according to rules for risk of collision with the host vehicle results in an analysis signal S_1 which indicates a risk of collision. Making its way round the obstacle is possible but the extra time involved in doing so means that the vehicle travelling in the opposite direction will have reached the tunnel. The result unit 12 is then adapted to analysing whether the lower-priority vehicle can make its way past the obstacle and still reach the tunnel within the particular time, and to determining a composite analysis signal S_x which indicates the result of the analysis. In this case the lower-priority vehicle cannot make its way round the obstacle and still reach the tunnel in time, resulting in a composite analysis signal which contains instructions for it to come to a halt and wait for the vehicle travelling in the opposite direction to pass before it can itself make its way past the obstacle.

The result unit 12 is then adapted to sending to a control system 17 on board the autonomous vehicle the composite analysis signal S_x for the vehicle to adjust its regulation in accordance with. In this way the autonomous vehicle can prioritise in different situations so that the whole traffic system becomes as efficient as

possible. The analysis signal S_x may in one embodiment also comprise control parameters for the control system 17 to base itself on.

The units described may be incorporated in a processor unit comprising one or more processors and an associated computer memory 19. Instructions may be stored in the computer memory for the processor or processors to perform steps herein described.

The invention relates also to a method for regulating an autonomous vehicle in a traffic system which comprises a plurality of autonomous vehicles, which method will now be explained with reference to the flowchart in Figure 3. The method comprises a first step A1) of receiving for the autonomous vehicle an assignment which contains information about at least one destination for the vehicle. The assignment may for example come from a management centre 1. The method further comprises a second step A2) of at least partly determining a route along which the vehicle should travel to reach said destination. The description of the system 16 above explained how a route might be determined, and this also applies in the method. As a third step A3) external information 13 is received along the route. While the autonomous vehicle is travelling along the specific route, it continually receives external information which may comprise information via cameras, lasers (e.g. LIDAR or LADAR), radar, speed sensors, acceleration sensors, and information about other vehicles or obstacles by V2V and/or V2I communication. The external information may also comprise a new assignment for the vehicle, or other information from the management centre 1. As a fourth step A4) the external information is analysed at least according to predetermined rules. The analysis is conducted according to specific rules, depending on what needs to be investigated. In one embodiment the analysis step A4) comprises analysing the external information on the basis of rules about the risk of collision with the host vehicle. The risk of the vehicle colliding with another vehicle or object may thus be determined. The autonomous vehicle may at a later stage then be regulated to avoid the collision. In another embodiment the analysis step A4) comprises analysing the external information on the basis of traffic rules

and/or in order to find the nearest way to reach the assignment. Different traffic systems may have different traffic rules which the autonomous vehicles have to adapt to. How the nearest way may be determined was described with reference to the system 16, and this also applies in the method. In another embodiment the analysis step A4) comprises analysing the external information on the basis of rules for cooperation with other road users. Efficient operation for a plurality of vehicles may thus be achieved. In another embodiment the analysis step A4) comprises analysing the external information on the basis of rules for external traffic management decisions. Such decisions may thus be handled. The above examples of step A4) may for example take place in parallel. As a fifth step A5) analysis signals S_1, S_2, S_3, S_4 indicating the results of the analyses are determined. As a sixth step A6) a prioritisation is related to at least one analysis signal S_1, S_2, S_3, S_4 on the basis of the particular analysis carried out and the contents of the analysis signals. In one embodiment the analysis signal S_1 which indicates the risk of collision is given highest priority, followed by the analysis signal S_3 which indicates the need for cooperation, and then the analysis signal S_2 which indicates whether the predetermined route indicated by the route signal S_B cannot be followed because of the traffic rules or is not the nearest way. Lowest priority is then given to the analysis signal S_4, which may for example indicate a new assignment. This is on the basis that an analysis signal given a priority also indicates a change for the vehicle.

As a sixth step A6) a composite analysis signal S_x is determined on the basis of the contents of the analysis signals and their prioritisation. As a seventh step A7) the composite signal S_x is sent to a control system 17 on board the autonomous vehicle, for the vehicle to adjust its regulation in accordance with.

In one embodiment the analysis step A4) comprises substeps A41) – A43) such that A41) sends a management centre 1 a query related to the external information 13, A42) receives a decision from the management centre and A43) analyses the external information on the basis of the decision. Expert help is thus available when a complicated situation arises.

The invention relates also to a computer programme P for an autonomous vehicle 2, which programme comprises programme code for enabling the system 16 to perform steps according to the method. Figure 2 shows the computer programme P as part of the computer memory 19. The programme is thus stored on the computer memory 19. The computer memory is connected to the units 7, 8, 9, 10, 11, 12 in the system 16, and when the whole or parts of the programme P are executed by one or more of these units, at least parts of the methods herein described are conducted. The invention further comprises a computer programme product comprising a programme code stored on a computer-readable medium for performing method steps herein described when the programme code is run on the system 16.

The present invention is not restricted to the preferred embodiments described above. Various alternatives, modifications and equivalents may be used. The above embodiments are therefore not to be regarded as limiting the invention's protective scope which is defined by the attached claims.

Claims

1. A system (16) for regulating an autonomous vehicle in a traffic system which comprises a plurality of autonomous vehicles, characterised in that the system (16) comprises a route unit (7) which is adapted to:
- receiving an assignment signal S_u which indicates for said autonomous vehicle an assignment which comprises destination information about at least one destination for the vehicle;
- determining at least partly a route which the vehicle should follow in order to reach said destination on the basis of at least said destination information, and generating a route signal S_B which indicates said route;
the system (16) further comprises a plurality of analysis units (8), (9), (10), (11) which are adapted to:
- receiving external information (13) along the route;
- analysing said external information (13) at least according to predetermined rules, and determining and generating analysis signals S_1, S_2, S_3, S_4 for the analysis units (8), (9), (10), (11) on the basis of the results of the analyses;
the system (16) further comprises a result unit (12) which is adapted to:
- receiving said analysis signals S_1, S_2, S_3, S_4;
- relating a prioritisation to at least one analysis signal S_1, S_2, S_3, S_4 on the basis of which analysis units (8), (9), (10), (11) they come from and their contents;
- determining a composite analysis signal S_x on the basis of the contents of the analysis signals and their prioritisation;
which result unit (12) is adapted to sending the composite analysis signal S_x to a control system (17) of the autonomous vehicle, after which the vehicle adapts its regulation in accordance with the composite analysis signal S_x.

2. A system according to claim 1, in which said analysis units (8), (9), (10), (11) comprise a collision unit (8), a navigation unit (9), a cooperation unit (10) and/or an assignment unit (11).

3. A system according to claim 2, in which the collision unit (8) is adapted to analysing said external information (13) on the basis of rules for risk of collision with the host vehicle.

4. A system according to either of claims 2 and 3, in which the navigation unit (9) is adapted to analysing said external information (13) on the basis of traffic rules and/or in order to find the nearest way to reach the assignment.

5. A system according to any one of claims 2 to 4, in which the cooperation unit (10) is adapted to analysing said external information (13) on the basis of rules for cooperation with other road users.

6. A system according to any one of claims 2 to 5, in which the assignment unit (11) is adapted to analysing said external information (13) on the basis of rules for external traffic management decisions.

7. A system according to any one of claims 2 to 6, in which at least one of the analysis units (8), (9), (10), (11) is adapted to
- sending to a management centre (1) a query signal β_1 which conveys a query related to the external information (13);
- receiving a decision signal β_2 which conveys a decision from the management centre (1);
- analysing said external information (13) on the basis of said decision.

8. A method for regulating an autonomous vehicle in a traffic system which comprises a plurality of autonomous vehicles, which method comprises the steps of

- receiving for said autonomous vehicle an assignment which comprises destination information about at least one destination for the vehicle;
- determining at least partly a route which the vehicle should follow in order to reach said destination;

- receiving external information (13) along the route;
- analysing said external information (13) at least according to predetermined rules;
- determining analysis signals S_1, S_2, S_3, S_4 which indicate the results of the analyses;
- relating a prioritisation to at least one analysis signal S_1, S_2, S_3, S_4 on the basis of the particular analysis carried out and the contents of the analysis signals;
- determining a composite analysis signal S_x on the basis of the contents of the analysis signals and their prioritisation;
- sending the composite analysis signal S_x to a control system (17) of the autonomous vehicle, after which the vehicle adapts its regulation in accordance with the composite analysis signal S_x.

9. A method according to claim 8, in which said analysis step comprises analysing said external information (13) on the basis of rules for risk of collision with the host vehicle.

10. A method according to either of claims 8 and 9, in which said analysis step comprises analysing said external information (13) on the basis of traffic rules and/or in order to find the nearest way to reach the assignment.

11. A method according to any one of claims 8 to 10, in which said analysis step comprises analysing said external information (13) on the basis of rules for cooperation with other road users.

12. A method according to any one of claims 8 to 11, in which said analysis step comprises analysing said external information (13) on the basis of rules for external traffic management decisions.

13. A method according to any one of claims 8 to 12, in which said analysis step comprises the substeps of

- sending to a management centre (1) a query related to the external information (13);
- receiving a decision from the management centre (1);
- analysing said external information (13) on the basis of said decision.

14. A computer programme (P) pertaining to an autonomous vehicle and comprising programme code for enabling a system (16) to perform steps according to any one of claims 8 to 13.

15. A computer programme product comprising a programme code stored on a computer-readable medium for performing method steps according to any one of claims 8 to 13 when said programme code is run on a system (16).

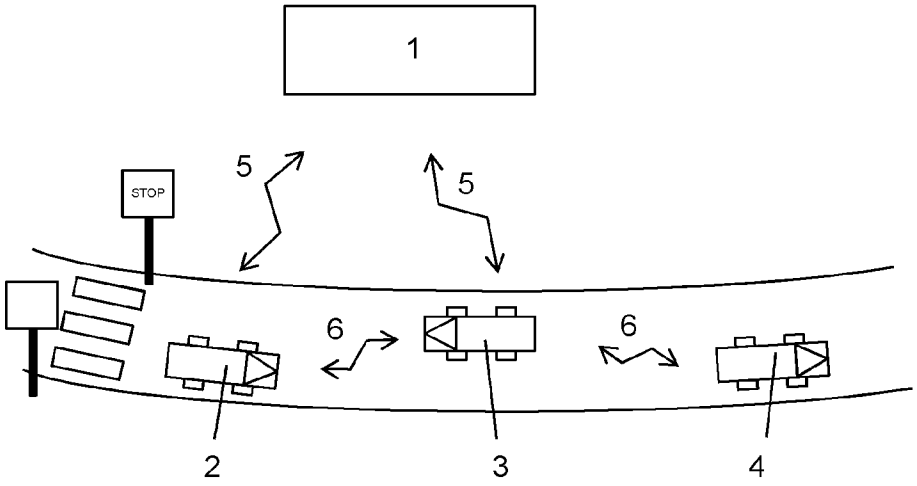
1
STOP
5
5
6
6
2
3
4

FIG. 1

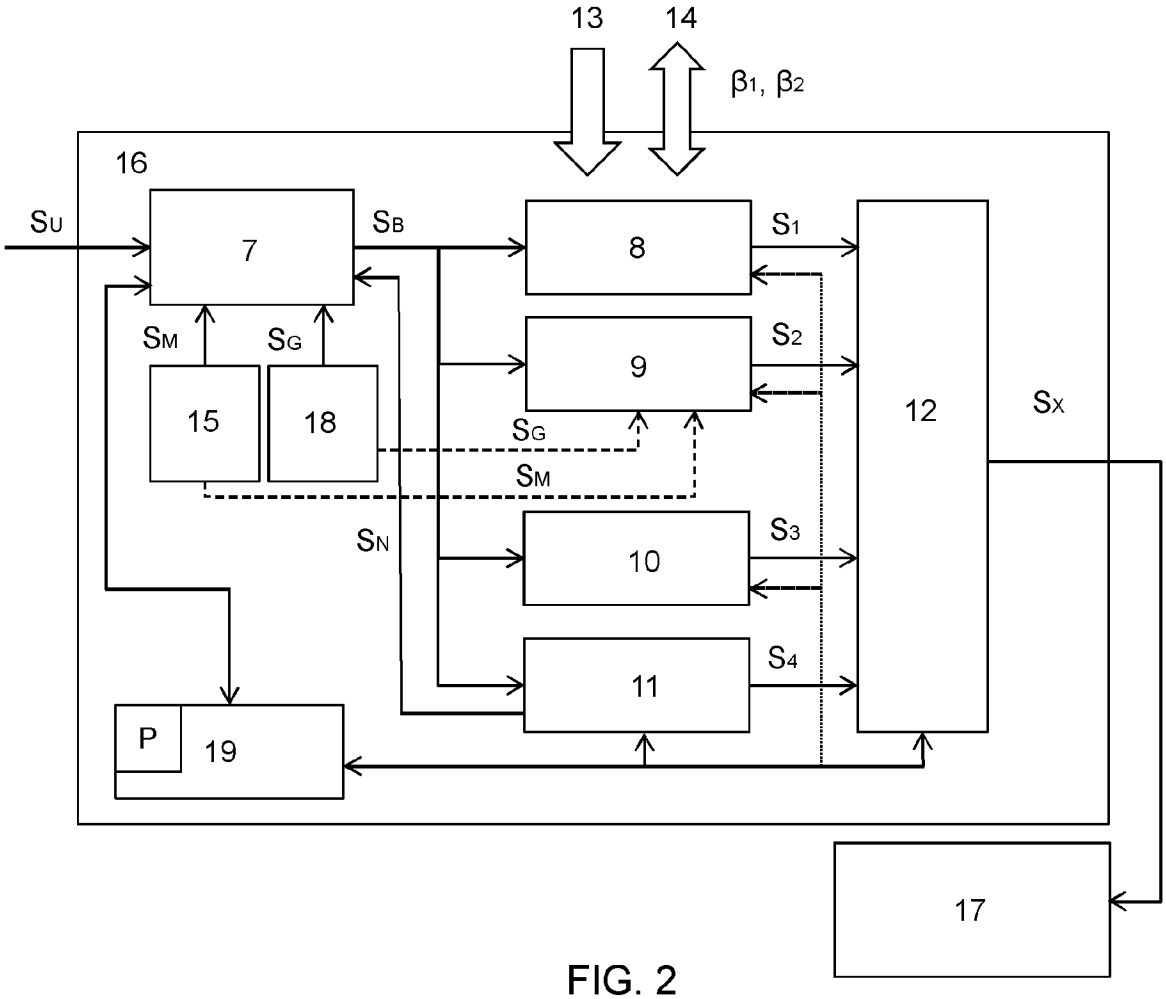
13
14
β1, β2
16
SU
7
SB
8
S1
9
S2
SM
SG
15
18
SG
SM
12
SX
SN
10
S3
11
S4
P
19
17

FIG. 2

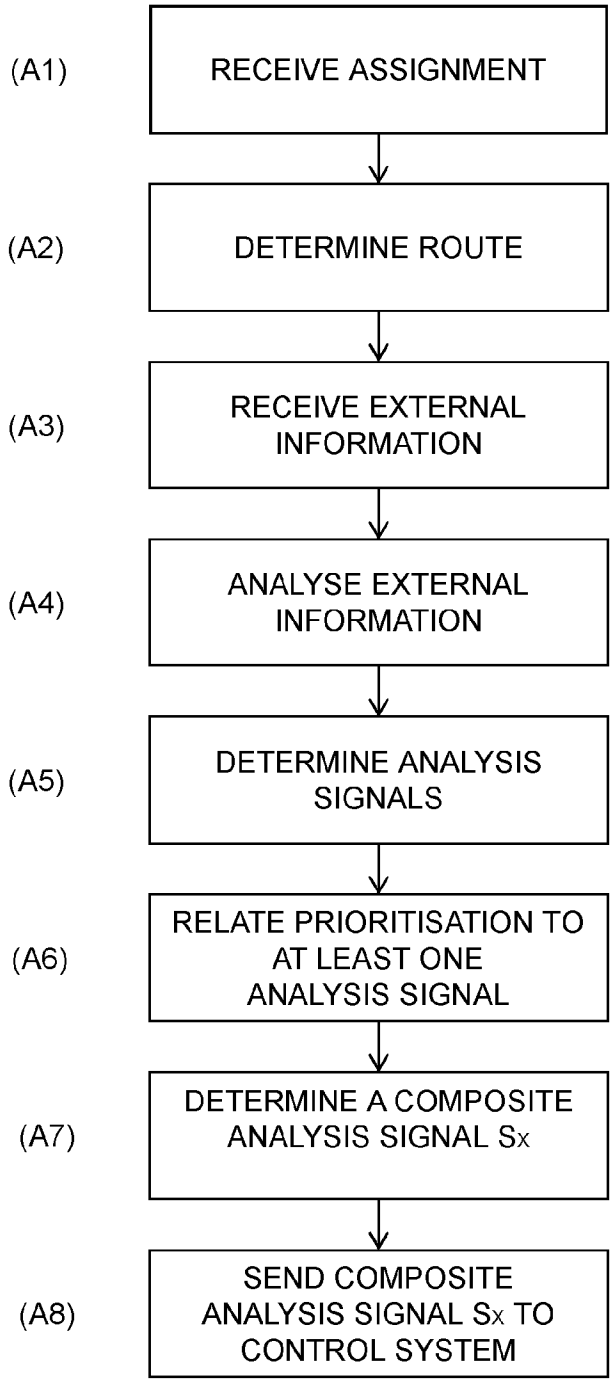
(A1)
RECEIVE ASSIGNMENT
(A2)
DETERMINE ROUTE
(A3)
RECEIVE EXTERNAL INFORMATION
(A4)
ANALYSE EXTERNAL INFORMATION
(A5)
DETERMINE ANALYSIS SIGNALS
(A6)
RELATE PRIORITISATION TO AT LEAST ONE ANALYSIS SIGNAL
(A7)
DETERMINE A COMPOSITE ANALYSIS SIGNAL Sx
(A8)
SEND COMPOSITE ANALYSIS SIGNAL Sx TO CONTROL SYSTEM

FIG. 3

INTERNATIONAL SEARCH REPORT

International application No.
PCT/SE2014/050278

A. CLASSIFICATION OF SUBJECT MATTER

IPC: see extra sheet

According to International Patent Classification (IPC) or to both national classification and IPC

B. FIELDS SEARCHED

Minimum documentation searched (classification system followed by classification symbols)

IPC: B62D, G05D

Documentation searched other than minimum documentation to the extent that such documents are included in the fields searched

SE, DK, FI, NO classes as above

Electronic data base consulted during the international search (name of data base and, where practicable, search terms used)

EPO-Internal, PAJ, WPI data, COMPENDEX, INSPEC

C. DOCUMENTS CONSIDERED TO BE RELEVANT

Category*	Citation of document, with indication, where appropriate, of the relevant passages	Relevant to claim No.
X	US 20090319112 A1 (FREGENE KINGSLEY O C ET AL), 24 December 2009 (2009-12-24); abstract; paragraphs [0007]-[0019]	1-4, 8-10, 14, 15
Y		6, 12
A	--	5, 7, 11, 13
Y	US 6151539 A (BERGHOLZ RALF ET AL), 21 November 2000 (2000-11-21); abstract; column 8, line 6 - column 8, line 34	6, 12
A	--	1-5, 7-11, 13-15

☒ Further documents are listed in the continuation of Box C. ☒ See patent family annex.

* Special categories of cited documents:

"A" document defining the general state of the art which is not considered to be of particular relevance

"E" earlier application or patent but published on or after the international filing date

"L" document which may throw doubts on priority claim(s) or which is cited to establish the publication date of another citation or other special reason (as specified)

"O" document referring to an oral disclosure, use, exhibition or other means

"P" document published prior to the international filing date but later than the priority date claimed

"T" later document published after the international filing date or priority date and not in conflict with the application but cited to understand the principle or theory underlying the invention

"X" document of particular relevance; the claimed invention cannot be considered novel or cannot be considered to involve an inventive step when the document is taken alone

"Y" document of particular relevance; the claimed invention cannot be considered to involve an inventive step when the document is combined with one or more other such documents, such combination being obvious to a person skilled in the art

"&" document member of the same patent family

Date of the actual completion of the international search	Date of mailing of the international search report
07-07-2014	07-07-2014
Name and mailing address of the ISA/SE Patent- och registreringsverket Box 5055 S-102 42 STOCKHOLM Facsimile No. + 46 8 666 02 86	Authorized officer Fredrik Arnesson Telephone No. + 46 8 782 25 00

Form PCT/ISA/210 (second sheet) (July 2009)

INTERNATIONAL SEARCH REPORT

International application No.
PCT/SE2014/050278

C (Continuation). DOCUMENTS CONSIDERED TO BE RELEVANT

Category*	Citation of document, with indication, where appropriate, of the relevant passages	Relevant to claim No.
A	US 7734387 B1 (YOUNG SHIH-YIH ET AL), 8 June 2010 (2010-06-08); abstract --	1-15
A	US 6122572 A (YAVNAI ARIE), 19 September 2000 (2000-09-19); abstract --	1-15
A	WO 9613024 A1 (CATERPILLAR INC), 2 May 1996 (1996-05-02); abstract --	1-15
A	US 20090037033 A1 (PHILLIPS EMILIE ET AL), 5 February 2009 (2009-02-05); abstract --	1-15
A	US 20080027591 A1 (LENSER SCOTT ET AL), 31 January 2008 (2008-01-31); abstract --	1-15
A	US 20070288132 A1 (LAM JUAN F), 13 December 2007 (2007-12-13); abstract -- --------	1-15

Continuation of: second sheet

International Patent Classification (IPC)

G05D 1/00 (2006.01)
B62D 1/28 (2006.01)
G05D 1/02 (2006.01)

US	20090319112	A1	24/12/2009	EP	2042405	A2	01/04/2009
				IL	192490	A	24/03/2013
				US	7979174	B2	12/07/2011
US	6151539	A	21/11/2000	EP	0913751	B1	03/09/2003
				JP	H11212640	A	06/08/1999
US	7734387	B1	08/06/2010	NONE			
US	6122572	A	19/09/2000	AU	5812196	A	29/11/1996
				IL	117792	A	31/10/2003
				WO	9635982	A1	14/11/1996
WO	9613024	A1	02/05/1996	BR	9506722	A	23/09/1997
				CA	2175358	A1	02/05/1996
				DE	69514209	D1	03/02/2000
				EP	0736210	A1	09/10/1996
				JP	H09508740	A	02/09/1997
				MX	9602433	A	28/02/1997
				US	5586030	A	17/12/1996
				ZA	9508273	A	24/05/1996
US	20090037033	A1	05/02/2009	US	20120166024	A1	28/06/2012
				US	8447440	B2	21/05/2013
				US	8255092	B2	28/08/2012
US	20080027591	A1	31/01/2008	US	8577538	B2	05/11/2013
US	20070288132	A1	13/12/2007	NONE			

(12) INTERNATIONAL APPLICATION PUBLISHED UNDER THE PATENT COOPERATION TREATY (PCT)

(19) World Intellectual Property Organization
International Bureau

(43) International Publication Date
25 September 2014 (25.09.2014)

WIPO | PCT

(10) International Publication Number
WO 2014/148976 A1

(51) International Patent Classification:
G05D 1/00 (2006.01) *G05D 1/02* (2006.01)

(21) International Application Number:
PCT/SE2014/050280

(22) International Filing Date:
6 March 2014 (06.03.2014)

(25) Filing Language: Swedish

(26) Publication Language: English

(30) Priority Data:
1350334-7 19 March 2013 (19.03.2013) SE

(71) Applicant: **SCANIA CV AB** [SE/SE]; SE-151 87 Södertälje (SE).

(72) Inventors: **ANDERSSON, Jon**; Engelsbergsvägen 89, SE-144 62 Rönninge (SE). **AH-KING, Joseph**; Mimervägen 3, SE-151 60 Södertälje (SE). **NYSTRÖM, Tom**; -, Heimdallsvägen 11, SE-151 60 Södertälje (SE).

(74) Agent: **YOUSSEF, Maikel**; Scania CV AB, SE-151 87 Södertälje (SE).

(81) Designated States *(unless otherwise indicated, for every kind of national protection available)*: AE, AG, AL, AM, AO, AT, AU, AZ, BA, BB, BG, BH, BN, BR, BW, BY, BZ, CA, CH, CL, CN, CO, CR, CU, CZ, DE, DK, DM, DO, DZ, EC, EE, EG, ES, FI, GB, GD, GE, GH, GM, GT, HN, HR, HU, ID, IL, IN, IR, IS, JP, KE, KG, KN, KP, KR, KZ, LA, LC, LK, LR, LS, LT, LU, LY, MA, MD, ME, MG, MK, MN, MW, MX, MY, MZ, NA, NG, NI, NO, NZ, OM, PA, PE, PG, PH, PL, PT, QA, RO, RS, RU, RW, SA, SC, SD, SE, SG, SK, SL, SM, ST, SV, SY, TH, TJ, TM, TN, TR, TT, TZ, UA, UG, US, UZ, VC, VN, ZA, ZM, ZW.

(84) Designated States *(unless otherwise indicated, for every kind of regional protection available)*: ARIPO (BW, GH, GM, KE, LR, LS, MW, MZ, NA, RW, SD, SL, SZ, TZ, UG, ZM, ZW), Eurasian (AM, AZ, BY, KG, KZ, RU, TJ, TM), European (AL, AT, BE, BG, CH, CY, CZ, DE, DK, EE, ES, FI, FR, GB, GR, HR, HU, IE, IS, IT, LT, LU, LV, MC, MK, MT, NL, NO, PL, PT, RO, RS, SE, SI, SK, SM, TR), OAPI (BF, BJ, CF, CG, CI, CM, GA, GN, GQ, GW, KM, ML, MR, NE, SN, TD, TG).

Published:

— *with international search report (Art. 21(3))*

(54) Title: DEVICE AND METHOD FOR CONTROLLING AN AUTONOMOUS VEHICLE WITH A FAULT

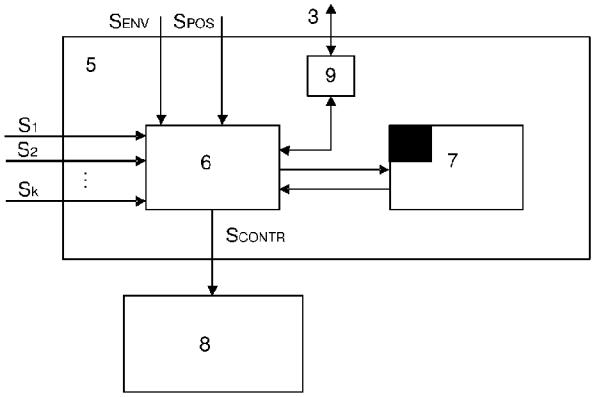

FIG. 3

(57) Abstract: The invention concerns a device for controlling an autonomous vehicle in connection with a risk of accident. The device comprises a processor unit that is adapted so as to receive one or a plurality of sensor signals S_1-S_k that indicate the state of at least one system or one component in the vehicle. The processor unit is adapted so as to analyze the state based on a first set of rules, and to generate an error signal in dependence upon the results of the analysis, whereupon the error signal indicates a fault in the system or a component, decides on at least one action for the vehicle at least according to a second set of rules for said fault and a third set of rules for the traffic system in which the vehicle is operating; and to generate one or a plurality of control signal(s) SCONTR that realize the action or actions and send SCONTR to at least one control system in the vehicle, whereupon the vehicle is controlled in accordance therewith. The invention also concerns a method for controlling an autonomous vehicle.

WO 2014/148976 A1

Device and method for controlling an autonomous vehicle with a fault

Technical field of the invention

The present invention concerns technology for controlling an autonomous vehicle in a traffic system comprising a plurality of autonomous vehicles according to the introduction to the independent claims.

Background of the invention

A vehicle that can be operated without a driver on the ground is called an Unmanned ground vehicle (UGV). There are two types of unmanned ground vehicles, those that are remote-controlled and those that are autonomous.

A remote-controlled UGV is a vehicle that is controlled by a human operator via a communication link. All actions are determined by the operator based on either direct visual observation or by means of sensors such as digital video cameras. A remote-controlled toy car is a simple example of a remote-controlled UGV. There are major variations among remote-controlled vehicles in use today. These vehicles are often used in dangerous situations and environments that are unsuitable for the presence of humans, such as in disarming bombs and in connection with hazardous chemical spills. Remote-controlled unmanned vehicles are also used in connection with surveillance work and the like.

An autonomous vehicle thus refers here to a vehicle that is capable of navigating and maneuvering without human control. The vehicle uses sensors to obtain an understanding of its surroundings. Sensor data are then used by control algorithms to determine what the next step for the vehicle to take is, based on an overarching goal for the vehicle, such as to retrieve and deliver goods at various locations. More specifically, an autonomous vehicle must be able to interpret its surroundings well enough to be able to perform the task it has been assigned, e.g. "move the block of stone from point A to point B via the mine gallery C." The autonomous vehicle needs to plan and follow a route to the selected destination

while detecting and avoiding obstacles in its path. The autonomous vehicle must also perform its tasks as quickly as possible, without making mistakes. Autonomous vehicles have also been developed for use in dangerous environments, such as in the defense and war industry, and in the mining industry, both open-pit and underground. If people or normal manually controlled vehicles approach the work area of the autonomous vehicles, they normally cause an interruption in the work for safety reasons. The vehicles are ordered to resume their work once the work area is free again.

The vehicle utilizes information about the road, the surroundings and other factors that affect its forward travel in order to automatically control its gas pedal depression, braking and steering. A careful assessment and identification of the planned forward travel is necessary in order to determine whether a route is passable, and necessary to be able to successfully replace human assessments in terms of driving the vehicle.
Road conditions can be complex, and the driver of a normal manned vehicle makes hundred of observations per minute and adjusts the operation of the vehicle based on the perceived road conditions. One aspect of assessing the road conditions is to perceive the road and the surroundings and find a passable route past objects that may be present on the road. The ability to replace the capacity of human perception with an autonomous system involves, among other things, the ability to perceive objects in a precise manner in order to be able to effectively control the vehicle so that it steers past such objects.

The technical methods used to identify an object in connection with the vehicle include the use of one or a plurality of cameras and radar to generate images of the surroundings. Laser technologies, both scanning lasers and fixed lasers, are used to detect objects and measure distances. These are often referred to as LIDAR (Light Detection and Ranging) or LADAR (Laser Detection and Ranging). Various sensors are also used in order to sense velocity and accelerations in various directions. Positioning systems with GPS (Global Positioning System) and

other wireless technology can also be used to determine whether the vehicle is, for example, approaching an intersection, a narrowing of the road, and/or other vehicles.

Autonomous vehicles are used today as load carriers in, for example, the mining industry, in both open-pit and underground mines. An accident in a bottleneck such as a transport route or in a mine will, in many cases, halt the production chain immediately, resulting in a significant loss of income. In primitive driver-controlled vehicles the driver is usually responsible for listening for unusual sounds and "sensing" the state of the vehicle and, if an imminent accident is suspected, he must immediate drive the vehicle to a safe location where the risk of disruptions in the production system is minimized. For an unmanned autonomous vehicle, this task poses a challenge.

JP-03201111-A describes how a production line can be prevented from being halted by studying the cumulative driven mileage when an autonomous vehicle reaches a station, and determining whether the vehicle is to continue to travel or not, based on the mileage driven.

US-2011/0241862-A1 describes a method and a system for insuring continued operation of a partially autonomous vehicle. A plurality of states is monitored that are necessary for a preferred and reliable use of the partially autonomous vehicle. A fault management and degradation strategy can be initiated that is configured so as to maneuver the vehicle to a preferred state in the even that the driver is unable to control the vehicle manually. The driver is first warned, and the vehicle can then, for example, be maneuvered to the side of the road and stopped.

In a traffic system comprising a plurality of autonomous vehicles, a better system that those described above is needed in order to be able to adapt the control of the autonomous vehicles with major variation so that faults detected in the vehicles will not affect the overall efficiency of the traffic system.

The object of the invention is thus to provide an improved system for controlling an autonomous vehicle in a traffic system in connection with a suspected fault in the vehicle, taking into account the overall efficiency of the traffic system.

Summary of the invention

According to a first aspect, this object is achieved by means of a device for controlling an autonomous vehicle in connection with a risk of accident according to the introduction to the first independent claim. The device comprises a processor unit that is adapted so as to receive one or a plurality of sensor signals S_1-S_k that indicate the state of at least one system or one component in the vehicle. The processor unit is adapted so as to analyze the state based on a first set of rules, and to generate an error signal in dependence upon the result of the analysis, wherein the error signal indicates a fault in at least the system or the component. The processor unit is further adapted so as to determine at least one action for the vehicle at least according to a second set of rules for said fault and a third set of rules for the traffic system in which the vehicle is operating, and to generate one or a plurality of control signal(s) S_{CONTR} that realize the action or actions and send S_{CONTR} to a control system in the vehicle. The vehicle is then controlled in accordance therewith.

Increased overall productivity can be achieved by endowing the vehicle with this functionality, with a view to automatically controlling the vehicle in accordance with a determined action in the event of a risk of production disruption or loss.

According to another aspect, the object is achieved with the invention by means of a method for controlling an autonomous vehicle according to the second independent claim.

Preferred embodiments are defined by the dependent claims, which will be described with reference to the accompanying figures.

Brief description of the figures

Figure 1 schematically depicts a part of a traffic system, here with three autonomous vehicles shown.
Figure 2 shows an autonomous vehicle containing a device according to an embodiment of the invention.
Figure 3 shows a device according to an embodiment of the invention.
Figure 4 shows a flow diagram for the method according to an embodiment of the invention.

Detailed description of preferred embodiments of the invention

Figure 1 schematically depicts a traffic system comprising three autonomous vehicles 2 that are advancing along a road. The arrows in the autonomous vehicles 2 indicate their respective directions of travel. The autonomous vehicles 2 can communicate with a control center 1 via, for example, V2I communication (Vehicle-to-Infrastructure) 3 and/or with one another via, for example, V2V communication (Vehicle-to-Vehicle) 4. This communication is wireless and can occur, for example, via a WLAN protocol (Wireless Local Area Network) IEEE 802.11, such as IEEE 802.11p. Other modes of wireless communication are, however, conceivable. The control center 1 organizes the autonomous vehicles 2 and gives them tasks to perform. When an autonomous vehicle receives a task, the vehicle can independently see to it that the task is performed. A task may consist of, for example, an instruction to retrieve goods at a goods retrieval site A. The vehicle 2 then has the ability to determine its current location, determine a route from the current position to the goods retrieval site A, and take itself there. En route the vehicle must also have the ability to avoid obstacles and manage other autonomous vehicles 2 that may have a more important task and need to be given preference.

Figure 2 shows an autonomous vehicle 2 with a device that will be described next. The device 5 can, for example, be a computer in the vehicle 2, or a control unit (ECU - Electronic Control Unit). The device 5 is adapted so as to communicate with different units and components in the vehicle via one or a plurality of different

networks in the vehicle 2, such as a wireless network, via CAN (Controller Area Network), LIN (Local Interconnect Network) or Flexray etc.

Figure 3 shows a device 5 for controlling an autonomous vehicle 2 in connection with a risk of accident. The device 5 comprises a processor unit 6 that is adapted so as to receive one or a plurality of sensor signals S_1-S_k that indicate the state of at least one system or one component in the vehicle 2. Sensor signals S_1-S_k can come from sensors that monitor systems and/or components in the vehicle, and transferred via any of the networks described above. A system can, for example, be a cooling system, engine system, gearbox, exhaust system or pneumatic system. A component can, for example, be a wheel bearing, a universal joint, a brake drum etc. The one or plurality of sensor signals S_1-S_k can, for example, indicate acceleration, temperature, vibrations, frequency, pressure and/or exhaust.

The processor unit 6 is further adapted so as to analyze the state based on a first set of rules, and to generate an error signal in dependence upon the results of the analysis. The error signal indicates a fault in the system or the component. The first set of rules can, for example, include the threshold values for the one or plurality of various sensor signals S_1-S_k, depending on the system or component from which they derive. A sensor signal S_1 can, for example, indicate the engine temperature of the vehicle 2. This engine temperature can then be compared to a threshold value for the engine temperature that should not be exceeded, owing to a risk that the engine will fail. If the temperature exceeds the threshold value, this will be indicated in the error signal. The sensor signals S_1-S_k can also contain information about which system or component they are monitoring. In this way, the processor unit 6 can know which analysis is to be performed for each respective sensor signal S_1-S_k. Other examples of faults that can be determined include leaking brake fluid from pneumatic systems, hot wheel bearings, leaking coolant, a fault in the exhaust gas purification system, vibrations, unusual noises etc. A fault in the exhaust purification can be determined by sensing and analyzing the exhaust that is coming out of the exhaust system. Vibrations and

unusual sounds can be sensed by means of frame-mounted accelerometer. The process or unit 6 can also be adapted so as to perform a more complex analysis. For example, a plurality of sensed parameters can be used to perform a more reliable analysis, and also combined with other vehicle-specific parameters such as which gear is engaged, the number of cogs the gear has, the vehicle velocity etc. For example, when a problem arises in the gearbox, it may first come into the processor unit 6 as a sensed temperature and a sensed frequency in the gearbox. The temperature can be sensed by means of a temperature sensor, and the frequency by means of, for example, an accelerometer. Because the processor unit 6 knows which gear is engaged and how many cogs each gear has, the processor unit 6 can determine the frequency that the gearbox should have. If the sensed frequency exceeds the frequency that the gearbox should have at the same time as the sensed temperature has exceeded a threshold value for the gearbox temperature, it can be deduced from the elevated temperature and the elevated frequency that something is amiss in the gearbox. The error signal can then indicate that there is a fault in the gearbox, and that the gearbox has an elevated frequency and an elevated temperature. Appropriate action can then be taken based on where the fault is localized. The first set of rules can, for example, include prediction methods and/or probability methods for determining whether the system or component will soon break down.

The device 5 can also comprise a computer memory 7 for storing sensor signals S_1-S_k over time in order to analyze trends, etc. The computer memory 7 can also contain instructions so that the processor unit 6 will be able to perform the steps described herein. Alternatively, or as a complement, the processor unit 6 can contain memory capacity for storing instructions etc. The processor unit 6 can, for, example, comprise a CPU (Computer Programmable Unit). The processor unit 6 and the computer memory 7 are preferably adapted so as to communicate with one another.

Based on the error signal, the processor unit 6 is then adapted so as to determine at least one action for the vehicle 2 at least according to a second set of rules for

the fault and a third set of rules for the traffic system in which the vehicle 2 is operating. The second set of rules for a fault in the system or the component includes rules for which consequence the fault can have for the vehicle 2, depending on which fault has arisen. If the fault is, for example, leaking brake fluid, there is a high risk that the vehicle will, for example, become stalled and block the road for other vehicles. Leaking coolant is also an example of a fault that requires rapid action. The actions are consequently also determined according to a third set of rules for the traffic system in which the vehicle 2 is operating. The third set of rules for the traffic system preferably includes rules for the efficiency of the traffic system, i.e. how the vehicle 2 is to act based on how it is being affected by the fault, taking into account the efficiency of the entire traffic system. In the event that the vehicle 2 is driving along a stretch with heavy traffic, and a fault in the vehicle 2 is detected that entails that the vehicle 2 is at risk of having an acute accident and blocking the traffic, then the vehicle 2 should, according to one embodiment, drive as quickly as possible to a safe location. In the event that the vehicle 2 is driving along a stretch with light traffic when a risk of accident is detected, and it is determined that it would need to drive along a stretch of heavy traffic in order to reach a place where the vehicle 2 can be repaired, it may be more advantageous in terms of the efficiency of the traffic system to let the vehicle 2 break down where it is than to take the risk that the vehicle 2 will begin to travel toward the repair site, break down and block traffic along the stretch with heavy traffic. In the event that the vehicle 2 is in a one-way tunnel when a fault in the vehicle 2 is detected and the vehicle 2 is at risk of breaking down, the vehicle 2 should drive out of the tunnel as quickly as possible to ensure that it is not at risk of blocking the traffic. These rules for the traffic system can be predetermined rules that describe which roads are usually more heavily trafficked, where tunnels are present, where important transportation routes are present, etc. The rules can also include retrieving information about the traffic system, about the traffic in the traffic system etc, and use that information to determine an appropriate action. This can be done via V2V or V2I information, or via an environmental signal S_{ENV} that will be described further below.

The processor unit 6 is further adapted so as to generate one or a plurality of control signal(s) S_{CONTR} that realize the one or a plurality of actions, and to send the control signals S_{CONTR} to at least one control system 8 in the vehicle 2, whereupon the vehicle 2 is controlled in accordance therewith. In this way the vehicle 2 can act in the best interests of the entire traffic system in the event of a detected fault in the vehicle 2.

An action can, for example, consist of finding a shortest route to a safe location. The control signal S_{CONTR} then indicates a route for the autonomous vehicle 2 to reach a safe location. To find a shortest route to a safe location, the processor unit 6 is adapted so as to receive a position signal S_{POS} that indicates the position of the vehicle, for example from a GNSS unit (Global Navigation Satellite System) in the vehicle 2. One or a plurality of safe locations can be predetermined, and the processor unit 6 can then be adapted so as to find the nearest safe location based on the position of the vehicle 2. A route can be determined on the basis of, for example, a map of the traffic system, and control signals can be generated so that the vehicle 2 can be controlled so as to take itself there. The rules for the traffic system can, for example, include that the vehicle 2 cannot travel on certain roads when a fault is detected. According to another embodiment, the actions include finding the best route to a safe location from a production standpoint. The control signals S_{CONTR} then indicate a route for the autonomous vehicle 2 to reach said location. For example, the best route from a production perspective may be to take a route around an entire transport route so as not to risk interrupting the shipments.

GNSS is a collective term for a group of worldwide navigation systems that utilize signals from a constellation of satellites and pseudosatellites to enable position measurements for a receiver. The American GPS system is the best-known GNSS system, but others include the Russian GLONASS and the future European Galileo. The position of the vehicle 2 can also be determined by monitoring signal strengths from a plurality of access points for wireless networks (WiFi) in the vicinity. Another way to determine the position is to measure the

number of wheel revolutions and, knowing the circumference of the wheel, determine how far the vehicle 2 has traveled. The position of the vehicle 2 in relation to a map can be determined, and in this way it is possible to know where the vehicle is located at all times.

A safe location can be, for example, a predetermined location in the traffic system where the vehicle 2 can be put without it disturbing other vehicles in the traffic system. It can also be a location where the vehicle 2 can be repaired or visually inspected, automatically or manually. The location can be a building where the entire vehicle 2 is automatically scanned for leaks of various fluids and photographed with thermal cameras to find areas (wheel bearings, brakes, driveline components) with elevated temperature levels. Data from the scan can then be communicated to the vehicle 2 or the control center 1, which subsequently, in combination with vehicle-internal data already downloaded, can make decisions as to whether it is possible to continue working. The processor unit 6 can thus be adapted so as to receive these data, and to analyze and make decisions based on these data as well. Alternatively, the control center 1 can make a decision based on data from the scan plus, optionally, any sensor signals S_1-S_k or an analysis already performed in the processor unit 6 and communicated via V21 to the control center 1. To this end, the device can be equipped with a unit 9 for wireless communication, which unit is adapted so as to receive data from the processor unit 6 and generate wireless signals 3 that the control center 1 can receive. The unit for wireless communication can also be adapted so as to receive wireless signals 3 containing data and transfer said data to the processor unit 6. This decision can then be communicated back to the vehicle 2. Scanning can also, or instead, occur at scheduled times.

The actions can also include determining an advantageous velocity for the autonomous vehicle 2. In the event that the detected fault was excessively hot wheel bearings, as described above, it is feasible for the vehicle in which the fault was detected to drive slowly in order to reach its final destination. However, a higher velocity may be better in terms of the efficiency of the entire traffic system.

In the event that the fault is found to be leaking coolant or leaking brake fluid, the velocity of the vehicle 2 must, according to one embodiment, be as high as the vehicle 2 and the traffic system allow. If the vehicle 2 must travel along a road with other vehicles, the vehicle 2 can adapt its velocity based on the velocity of the other vehicles so as not to block the traffic.

The processor unit 6 can also be adapted so as to take into account the distance to the safe location in determining an advantageous velocity for the autonomous vehicle 2. The processor unit 6 can then be adapted so as to determine the distance to the safe location based on the determined route thither. The determined route is determined based on information about the position of the vehicle, information about where the safe location is, cartographic information, and the third set of rules for the traffic system in which the vehicle 2 is operating. In the event that an excessively high engine temperature has been determined and it is a short distance to the safe location, i.e. a length of road lower than a predetermined limit value, the vehicle 2 can have a proportionally higher velocity than would be the case if the distance to the safe location were greater.

According to one embodiment, the processor unit 6 is also adapted so as to receive an environmental signal S_{ENV} that indicates at least one environmental parameter, whereupon a decision regarding at least one action is based on said at least one environmental parameter. The environmental parameter can, for example, comprise information about the number of vehicles along a given route, the road surface, temperature, traffic accidents etc. This information can then be incorporated into the decision regarding action. The environmental signal S_{ENV} can, for example, be a wireless signal from another vehicle, from the control center 1 or from a roadside unit adapted for wireless communication. The environmental signal S_{ENV} can then be received in the unit 9 for wireless communication. The environmental signal S_{ENV} can instead come from a sensing unit in the vehicle 2, such as a camera unit, a laser unit, a radar unit or a temperature unit etc. The information that these units generate can be analyzed, for example in each respective unit, in a separate analysis unit and/or in the

processor unit 6 in order to generate one or a plurality of environmental parameters. The environmental signal S_{ENV} can also be an integrated signal that contains information from a plurality of the aforementioned units.

According to one example, the processor unit 6 receives a sensor signal S_1 that indicates a temperature of a wheel bearing. This temperature is analyzed according to a first set of rules, which in this case entail comparing the temperature of the wheel bearing to a predetermined threshold value for the temperature of the wheel bearing. In the event that the temperature of the wheel bearing is greater than the threshold value, an error signal is generated that indicates that the wheel bearing temperature is too high. The processor unit 6 is then adapted so as to decide upon an action for the vehicle based on how the high temperature of the wheel bearing will affect the vehicle 2 according to the second set of rules for the fault and the third set of rules for the traffic system in which the vehicle 2 is operating. The second set of rules can, for example, indicate that the overly high temperature in the wheel bearing poses no risk of an immediate stop of the vehicle 2, but that there is a risk that the vehicle 2 will break down later on, and the wheel bearing should be replaced. The velocity of the vehicle 2 should also be kept low. In the event that the vehicle 2 is, for example, on a road where it is not disturbing another vehicle, then the third set of rules may indicate that the velocity of the vehicle 2 is to be adjusted to a low velocity, and that a fastest route to a safe location is to be determined. The actions for adjusting the velocity of the vehicle 2 to a low velocity and finding a fastest route to a safe location can then be determined. In the event that the vehicle 2 is instead located in the middle of an important production line with heavy traffic, the third set of rules may indicate that the velocity of the vehicle 2 must be adapted based on the velocity of the other vehicles so as not to disturb production. The actions for adjusting the velocity of the vehicle 2 to a velocity adapted based on the other vehicles and finding a route to a safe location that will not disturb the production line can then be determined. The processor unit can be adapted according to the third set of rules so as to match the position of the vehicle 2 with information about where production lines, tunnels, heavy traffic etc are present, and in this way

determine whether the vehicle 2 is at risk of disrupting the efficiency of the traffic system.

The invention also concerns a method for controlling an autonomous vehicle 2, which method will now be illustrated with reference to the flow diagram in Figure 4. The method comprises a first step A1), which comprises receiving one or a plurality of sensor signals S_1-S_k that indicate the state of at least one system or one component in the vehicle 2. Sensor signals S_1-S_k can, for example, indicate acceleration, temperature, vibrations, frequency, pressure and/or exhaust etc. In a second step A2) the state is analyzed based on a first set of rules, and an error signal is generated in dependence upon the results of the analysis, whereupon the error signal indicates a fault in said at least one system or one component. In a third step A3) at least one action is decided upon for the vehicle 2 at least according to a second set of rules for the fault and a third set of rules for the traffic system in which the vehicle 2 is operating. According to one embodiment, the set of rules for the traffic system includes rules for the efficiency of the traffic system. The decision can also be based on an environmental parameter from an environmental signal S_{ENV}. The method can then, in step A1), also comprise receiving this environmental signal S_{ENV} that indicates an environmental parameter. In a fourth step A4) the vehicle 2 is controlled in accordance with the action or actions.

According to one embodiment, the actions include finding a shortest way to a safe location. According to another embodiment, the actions include finding the best route to a safe location from a production standpoint. Actions can also include determining an advantageous velocity for the autonomous vehicle. The distance to the safe location can be taken into account in determining an advantageous velocity for the autonomous vehicle. Examples and advantages of these embodiments have been clarified in connection with the device.

The invention also concerns a computer program P for an autonomous vehicle, wherein the computer program P contains program code for enabling the device 5

to perform the steps according to the method. Figure 3 shows the computer program P as a part of the computer memory 7. The computer program P is thus stored in the computer memory 7. The computer memory 7 is connected to the processor unit 6 and, when the computer program P is executed by the processor unit 6, at least parts of the methods described herein are performed. The invention further comprises a computer program product containing program code stored on a computer-readable medium for performing the method steps described herein when the program code is run on the device 5.

The present invention is not limited to the preferred embodiments described above. Various alternatives, modifications and equivalents can be used. The foregoing embodiments are consequently not to be viewed as limiting the protective scope of the invention, which is defined in the accompanying claims.

Claims

1. A device (5) for controlling an autonomous vehicle (2) in connection with a risk of accident, wherein the device (5) comprises a processor unit (6) that is adapted so as to receive one or a plurality of sensor signals S_1-S_k that indicate the state of at least one system or one component in the vehicle (2);
c h a r a c t e r i z e d i n t h a t the processor unit (6) is adapted so as to:
- analyze said state based on a first set of rules, and generate an error signal in dependence upon the results of the analysis, whereupon the error signal indicates a fault in said at least one system or one component;
- determine at least one action for the vehicle at least according to a second set of rules for said fault and a third set of rules for the traffic system in which the vehicle (2) is operating; wherein said third set of rules for the traffic system includes rules for the efficiency of the traffic system;
- generate one or a plurality of control signal(s) S_{CONTR} that realize said action(s);
- send said control signal(s) S_{CONTR} to at least one control system (8) in the vehicle (2), whereupon the vehicle (2) is controlled in accordance therewith.

2. A device according to claim 1, wherein the processor unit (6) is also adapted so as to receive an environmental signal S_{ENV} that indicates at least one environmental parameter, whereupon said determination regarding at least one action is also based on said at least one environmental parameter.

3. A device according to claims 1 or 2, wherein said actions include finding a shortest route to a safe location, wherein said control signals S_{CONTR} indicate a route for the autonomous vehicle (2) to reach a safe location.

4. A device according to any of claims 1 to 2, wherein said actions include finding the best route to a safe location from a production standpoint, wherein said control signals S_{CONTR} indicate a route for the autonomous vehicle (2) to reach a safe location.

5. A device according to any of claims 3 or 4, wherein said actions also include determining an advantageous velocity for the autonomous vehicle (2).

6. A device according to claim 5, wherein said processor unit (6) is adapted so as to also take the distance to the safe location into account when determining an advantageous velocity for the autonomous vehicle (2).

7. A device according to any of the preceding claims, wherein said one or a plurality of sensor signals S_1-S_k indicate acceleration, temperature, vibrations, frequency, pressure and/or exhaust.

8. A method for controlling an autonomous vehicle (2), which method comprises the steps of
- receiving one or a plurality of sensor signals S_1-S_k that indicate the state of at least one system or one component in the vehicle (2);
- analyzing said state based on a first set of rules, and generating an error signal in dependence upon the results of the analysis, whereupon the error signal indicates a fault in said at least one system or one component;
- determining at least one action for the vehicle (2) at least according to a second set of rules for said fault and a third set of rules for the traffic system in which the vehicle (2) is operating; wherein said third set of rules for the traffic system includes rules for the efficiency of the traffic system;
- controlling the vehicle (2) in accordance with the action or actions.

9. A method according to claim 8, which comprises the step of receiving an environmental signal S_{ENV} that indicates an environmental parameter, whereupon said decision regarding at least one action is also based on said environmental parameter.

10. A method according to any of claims 8 to 9, wherein said actions include finding a shortest route to a safe location.

11. A method according to any of claims 8 to 10, wherein said actions include finding a best route to a safe location from a production perspective.

12. A method according to any of claims 8 to 11, wherein said actions also include determining an advantageous velocity for the autonomous vehicle.

13. A method according to claim 12, which also comprises taking the distance to the safe location into account when determining an advantageous velocity for the autonomous vehicle.

14. A method according to any of claims 8 to 13, wherein said one or a plurality of sensor signals S_1-S_k indicate acceleration, temperature, vibrations, frequency, pressure and/or exhaust.

15. A computer program (P) for an autonomous vehicle, wherein said computer program (P) contains program code for enabling a device (5) to perform the steps according to any of claims 8-14.

16. A computer program product comprising a program code stored on a computer-readable medium for performing the method steps according to any of claims 8-14 when said program code is run in a device (5).

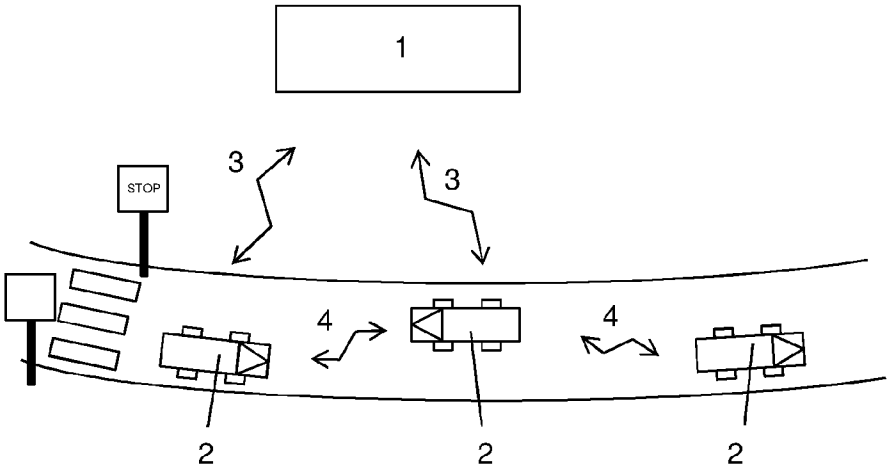

FIG. 1

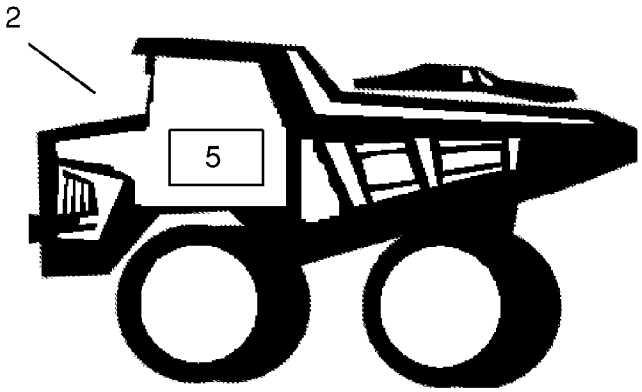

FIG. 2

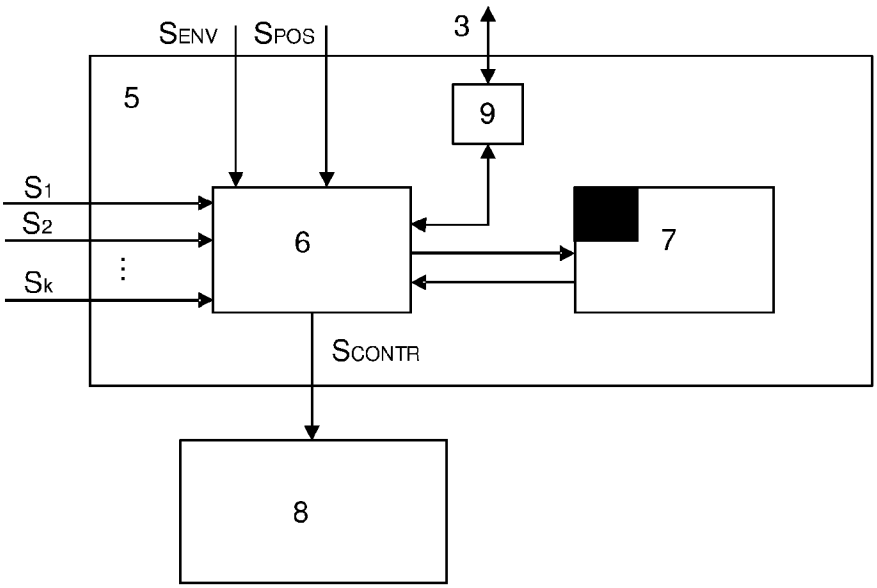

FIG. 3

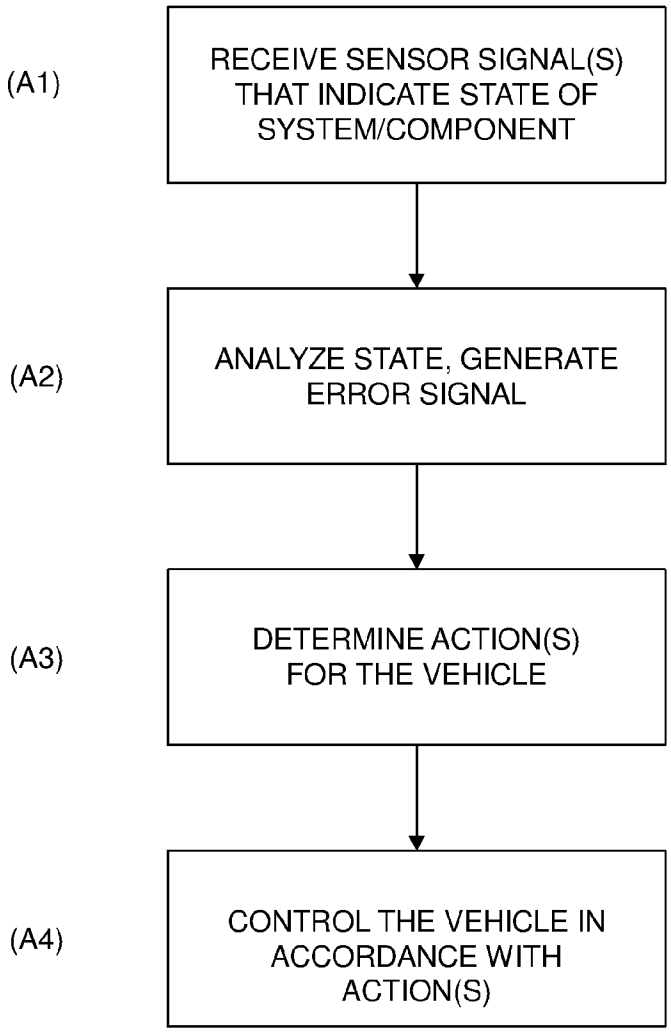
(A1)
RECEIVE SENSOR SIGNAL(S) THAT INDICATE STATE OF SYSTEM/COMPONENT
(A2)
ANALYZE STATE, GENERATE ERROR SIGNAL
(A3)
DETERMINE ACTION(S) FOR THE VEHICLE
(A4)
CONTROL THE VEHICLE IN ACCORDANCE WITH ACTION(S)

FIG. 4

INTERNATIONAL SEARCH REPORT

International application No.
PCT/SE2014/050280

A. CLASSIFICATION OF SUBJECT MATTER

IPC: see extra sheet

According to International Patent Classification (IPC) or to both national classification and IPC

B. FIELDS SEARCHED

Minimum documentation searched (classification system followed by classification symbols)

IPC: G05D

Documentation searched other than minimum documentation to the extent that such documents are included in the fields searched

SE, DK, FI, NO classes as above

Electronic data base consulted during the international search (name of data base and, where practicable, search terms used)

EPO-Internal, PAJ, WPI data

C. DOCUMENTS CONSIDERED TO BE RELEVANT

Category*	Citation of document, with indication, where appropriate, of the relevant passages	Relevant to claim No.
X	US 20120083959 A1 (DOLGOV DMITRI A ET AL), 5 April 2012 (2012-04-05); paragraphs [0038], [0060], [0071]-[0074], [0086]; figures 1-3, 8; claim 6 --	1-16
X	EP 2317412 A1 (BAE SYSTEMS PLC), 4 May 2011 (2011-05-04); abstract; paragraphs [0049]-[0073]; figures 2,4; claims 1, 17 --	1-16
A	US 20090319112 A1 (FREGENE KINGSLEY O C ET AL), 24 December 2009 (2009-12-24); paragraphs [0007]-[0009], [0015]-[0019]; figure 1 --	1-16

☒ Further documents are listed in the continuation of Box C. ☒ See patent family annex.

* Special categories of cited documents:

"A" document defining the general state of the art which is not considered to be of particular relevance

"E" earlier application or patent but published on or after the international filing date

"L" document which may throw doubts on priority claim(s) or which is cited to establish the publication date of another citation or other special reason (as specified)

"O" document referring to an oral disclosure, use, exhibition or other means

"P" document published prior to the international filing date but later than the priority date claimed

"T" later document published after the international filing date or priority date and not in conflict with the application but cited to understand the principle or theory underlying the invention

"X" document of particular relevance; the claimed invention cannot be considered novel or cannot be considered to involve an inventive step when the document is taken alone

"Y" document of particular relevance; the claimed invention cannot be considered to involve an inventive step when the document is combined with one or more other such documents, such combination being obvious to a person skilled in the art

"&" document member of the same patent family

Date of the actual completion of the international search	Date of mailing of the international search report
24-06-2014	25-06-2014
Name and mailing address of the ISA/SE Patent- och registreringsverket Box 5055 S-102 42 STOCKHOLM Facsimile No. + 46 8 666 02 86	Authorized officer Tomas Lund Telephone No. + 46 8 782 25 00

Form PCT/ISA/210 (second sheet) (July 2009)

INTERNATIONAL SEARCH REPORT

International application No.
PCT/SE2014/050280

C (Continuation). DOCUMENTS CONSIDERED TO BE RELEVANT

Category*	Citation of document, with indication, where appropriate, of the relevant passages	Relevant to claim No.
A	US 20110241862 A1 (DEBOUK RAMI I ET AL), 6 October 2011 (2011-10-06); abstract; paragraphs [0007]-[0009] --	1-16
A	JP H03201111 A (OMRON TATEISI ELECTRONICS CO), 3 September 1991 (1991-09-03); figure 1; see PAJ abstract -- --------	1-16

Form PCT/ISA/210 (continuation of second sheet) (July 2009)

Continuation of: second sheet

International Patent Classification (IPC)

G05D 1/00 (2006.01)
G05D 1/02 (2006.01)

US	20120083959	A1	05/04/2012	CN	103370249	A	23/10/2013
				CN	103339010	A	02/10/2013
				CN	103339009	A	02/10/2013
				EP	2625079	A2	14/08/2013
				EP	2625083	A2	14/08/2013
				EP	2625081	A2	14/08/2013
				JP	2013544696	A	19/12/2013
				JP	2013544695	A	19/12/2013
				JP	2013544697	A	19/12/2013
				KR	20130129931	A	29/11/2013
				KR	20130132790	A	05/12/2013
				KR	20140020230	A	18/02/2014
				US	8660734	B2	25/02/2014
				US	20140136045	A1	15/05/2014
				US	8688306	B1	01/04/2014
				US	8509982	B2	13/08/2013
				US	20130297140	A1	07/11/2013
				US	20120083964	A1	05/04/2012
				US	20120083960	A1	05/04/2012
				US	8634980	B1	21/01/2014
				WO	2012047743	A2	12/04/2012
				WO	2012047977	A2	12/04/2012
				WO	2012047980	A4	16/08/2012
EP	2317412	A1	04/05/2011	NONE			
US	20090319112	A1	24/12/2009	EP	2042405	A2	01/04/2009
				IL	192490	A	24/03/2013
				US	7979174	B2	12/07/2011
US	20110241862	A1	06/10/2011	CN	102233877	A	09/11/2011
				DE	102011015130	A1	22/12/2011
				US	8618922	B2	31/12/2013
JP	H03201111	A	03/09/1991	NONE			

Espacenet

Bibliographic data: WO2015024616 (A1) — 2015-02-26

DEVICE AND METHOD FOR CONTROLLING A MOTOR VEHICLE

Inventor(s): DANZL MARTIN [DE]; WÜST SABINE [DE]; GOLLEWSKI THORSTEN [DE]; KIENZL GEORG [DE]; HAGEMANN FRANZ-MICHAEL [DE]; SIEDERSBERGER KARL-HEINZ [DE]; MIEHLING THOMAS [DE]; KUNSCH PETER [DE] ± (DANZL, MARTIN, ; WÜST, SABINE, ; GOLLEWSKI, THORSTEN, ; KIENZL, GEORG, ; HAGEMANN, FRANZ-MICHAEL, ; SIEDERSBERGER, KARL-HEINZ, ; MIEHLING, THOMAS, ; KUNSCH, PETER)

Applicant(s): AUDI AG [DE] ± (AUDI AG)

Classification:
- **international:** ***B60K28/06; B60W10/04; B60W10/10; B60W10/18; B60W10/20; B60W30/09; B60W30/095***
- **cooperative:** **B60K28/06 (EP, US); B60W10/04 (EP, US); B60W10/10 (EP, US); B60W10/18 (EP, US); B60W10/20 (EP, US); B60W30/09 (EP, US); B60W30/0953 (EP, US); B60W30/0956 (EP, US); G08G1/161 (US);** B60W2540/22 (EP, US); B60W2540/24 (EP, US); B60W2540/26 (EP, US); B60W2555/00 (US); B60W2556/00 (US)

Application number: WO2014EP01971 20140719 Global Dossier

Priority number(s): DE20131013867 20130820

Also published as: CN105473408 (A) CN105473408 (B) DE102013013867 (A1) EP3036124 (A1) EP3036124 (B1) more

Abstract of WO2015024616 (A1)

The invention relates to a motor vehicle, comprising at least one driver assistance system (2) for calculating future driving situations of the motor vehicle (1) in advance for a specified time interval by evaluating ego-data related to the motor vehicle (1) and environment data related to the motor vehicle environment, wherein the motor vehicle (1) can be controlled by a driver in a first operating mode of the driver assistance system (2), wherein the driver assistance system (2) is designed to temporarily switch to a second operating mode if a switching condition dependent at least on the future

driving situations is satisfied, in which second operating mode the motor vehicle (1) is controlled autonomously by the driver assistance system (2) without the possibility of intervention by the driver, wherein in the second operating mode the driving operation is continued.

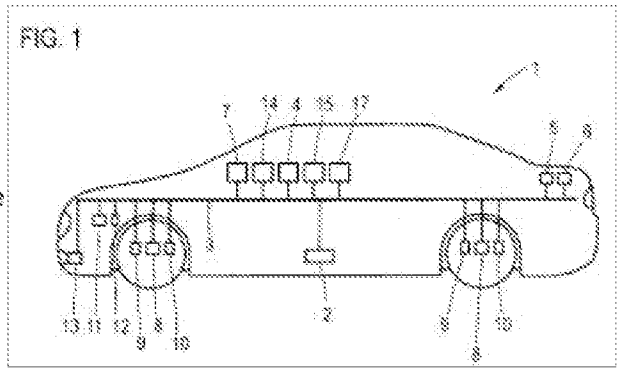

Patent Translate
Powered by EPO and Google

Notice

This translation is machine-generated. It cannot be guaranteed that it is intelligible, accurate, complete, reliable or fit for specific purposes. Critical decisions, such as commercially relevant or financial decisions, should not be based on machine-translation output.

DESCRIPTION WO2015024616A1

[0001]

Motor vehicle and method for controlling a motor vehicle

[0002]

The invention relates to a motor vehicle, comprising at least one driver assistance system for precalculating future driving situations of the motor vehicle for a predetermined time interval by evaluating ego data relating to the motor vehicle and surrounding data relating to the motor vehicle, the motor vehicle being controllable by a driver in a first operating mode of the driver assistance system.

[0003]

Modern motor vehicles have a large number of driver assistance systems that serve to increase driving safety and / or driving comfort.

In particular, driver assistance systems are known which intervene in the control of the motor vehicle systems as a function of an actual state of the motor vehicle, such as, for example, anti-lock braking systems or lane stabilization systems.

In addition, comfort systems such as lane departure warning systems or automatic distance controls are known which calculate predictions about future driving situations from ego data and environment data of a motor vehicle and control the motor vehicle in accordance with these predictions. It is known that these semi-autonomous control systems often carry out control tasks with a shorter reaction time and a higher degree of accuracy than a human driver. Autonomous driving in many driving situations can therefore lead to improved driving behavior of the vehicle compared to control by a human driver.

[0004]

In order to use the advantages of faster and more precise control of the motor vehicle in an autonomous driving mode to improve safety, it is known to use systems that recognize impending collisions with other motor vehicles and try to avoid these collisions or to reduce the effects of the collisions.

For this purpose, the driving operation is intervened in order to bring the motor vehicle to a standstill in a controlled manner. The disadvantage here is that the position reached by the motor vehicle is often not ideal, with the motor vehicle being brought to a standstill representing an obstacle for other road users. In addition, it is desirable to use autonomous driving interventions in other driving situations in order to achieve an overall improved driving behavior of the motor vehicle in critical situations without unnecessarily restricting the driver's freedom of action.

[0005]

The invention is therefore based on the object of specifying a motor vehicle whose driving behavior is improved in critical driving situations.

[0006]

To solve this problem, the invention provides in a motor vehicle of the type mentioned that its driver assistance system, when a switchover condition, which depends at least on the future driving situations, is met, to temporarily switch to a second operating mode, in which the control of the motor vehicle is autonomously carried out by the driver without the possibility of intervention by the driver Driver assistance system takes place, is formed, wherein the driving mode is continued in the second operating mode.

[0007]

The invention is based on the idea of giving a driver the greatest possible freedom of action in "normal" driving mode, but recognizing critical situations in driving mode predictively and, if such a driving situation is present, intervening in the driving operation in good time, with the aim of stopping the driving operation as well as possible after the to be able to continue the critical situation seamlessly.

If such an intervention occurs, at least the control of the motor vehicle takes place completely autonomously, that is to say without the possibility of intervention by the driver.

In particular, completely autonomous longitudinal and lateral guidance of the motor vehicle can also take place in the second operating mode.

As a result of this control of at least the control of the motor vehicle, which is completely independent of the driver, the advantages of the autonomous control, in particular a shorter reaction time and a more precise control, can be used. In the second operating mode of the driver assistance system, there is no braking of the motor vehicle to a standstill, rather the driving operation is continued to a waypoint ahead. For example, the driver assistance system can determine a point at which the switchover condition is no longer likely to exist, that is to say a point which lies beyond a critical range in which the switchover condition is met.

[0008]

The switchover condition can be selected such that it is fulfilled when driving situations are predicted that require driving in the physical limit range or close to the physical limit range of the motor vehicle.

However, it is often advantageous to select the switchover condition in such a way that a switchover to the second operating mode already takes place when it can be assumed that a driver does not reliably master the predicted driving situation. In particular, it is possible that the switchover condition is dependent on a characteristic of the driver. In this way, in the motor vehicle according to the invention, the driver assistance system can intervene in situations in which a driver can no longer reliably and comfortably control the motor vehicle, but autonomous interventions still allow driving operation to be continued.

[0009]

The second operating mode of the driver assistance system is therefore activated in particular when the motor vehicle is moved in the (physical or preferably driver-specific) limit area or when unexpected traffic situations suddenly occur.

In order to recognize such situations, the driver assistance system collects ego data and environment data, which can be made available by various devices in the motor vehicle. A large number of pieces of information can be used to predict whether a switchover condition has been met, that is to say whether a critical driving situation is to be expected in particular. In particular, the ego data can include information about motor vehicle components, in particular the engine, the brakes and / or the tires. The driving behavior of the motor vehicle can thus be predicted particularly well in that a coefficient of friction between the tire and the road surface can be estimated. For this purpose, coefficients of friction can be determined or specified directly Friction coefficients can also be determined from further information about the tire, such as mileage, type, and air pressure. With regard to the engine and the brakes, maximum braking and acceleration torques in particular are essential for determining and evaluating potential driving situations.

Other vehicle parameters, such as a maximum steering angle, can also be evaluated as component information.

[0010]

In addition, time-variable information about the motor vehicle such as the vehicle's own speed and / or a roll, pitch or yaw angle and / or the mass and / or the location of the center of gravity and / or the steering angle of at least one wheel and / or the angular speed of at least one wheel of the motor vehicle can be used recorded and used to forecast future driving situations.

[0011]

In addition to the information about the motor vehicle itself, data about the surroundings of the motor vehicle are also necessary to forecast future driving situations.

These can be obtained in particular by using sensors on the motor vehicle and / or from information stored in the navigation system.

Advantageously, data about the roadway are recorded, for example at least one curve radius and / or a local roadway gradient and / or a local roadway inclination and / or a local coefficient of friction and / or a roadway width. In addition, information should be obtained about potential obstacles such as other motor vehicles, pedestrians and stationary obstacles. For moving obstacles such as motor vehicles and pedestrians, in particular, data can also be determined that enable a movement prognosis for these obstacles. Methods and devices for obtaining environmental data are known in the prior art and are therefore not discussed further.

[0012]

An essential feature of the motor vehicle according to the invention is that the driver assistance system in the second operating mode only temporarily controls the motor vehicle autonomously.

Therefore, in the second operating mode, the driver assistance system is designed to, when a Switch-back condition, which can also include several individual conditions, to switch back from the second operating mode to the first operating mode. In order to ensure that the driver actively takes control of the motor vehicle, it is advantageous to first issue a takeover request to the driver when the downshift condition is met. In particular, a visual, acoustic or haptic indication is given to the driver that the driver assistance system is ready to hand over the control of the motor vehicle to the driver again. The actual takeover of vehicle control by the driver can therefore only take place after the driver has confirmed the return of vehicle control through an action. In addition, a recoupling of the steering wheel movement to the steering movement should take place during the transfer. Therefore, when adopting the steering wheel angle, it must be the same as the steering wheel angle that corresponds to the current steering angle.

[0013]

By temporarily switching to the second operating mode of the driver assistance system, it is achieved in the motor vehicle according to the invention that normal driving is possible even after the driver assistance system intervenes.

The driving operation of the motor vehicle is therefore not interrupted by the intervention of the driver assistance system. It is thus possible for the motor vehicle to move continuously while the driver assistance system is operating in the second operating mode. Since a standstill of the motor vehicle is avoided, the flow of traffic is generally less disturbed than in the case of safety systems which bring the motor vehicle to a standstill. In addition, by continuing the driving operation, it is possible to reduce the burden on the driver. When operating the driver assistance system in the second operating mode, the driver can be advised that the driver assistance system is intervening in the driving mode, in particular to make the driver aware that he is moving the motor vehicle close to the physical limit range or probably beyond his comfort range. Since sudden braking maneuvers and the associated shock are avoided, however, the continuation of the journey is made much easier for the majority of drivers.

Obviously, the continuation of the driving operation achieved in the second operating mode of the driver assistance system is only possible if the driver assistance system can safely and reliably guide the motor vehicle through the imminent critical driving situation. In rare cases, however, it may not be possible to continue driving safely. A further operating mode of the driver assistance system can advantageously be provided for these situations in order to minimize the effects of such driving situations.

[0014]

Tesla EX1002 Page 1961 IPR2025-01034

In the second operating mode, the driver assistance system can be designed to calculate a prognosis as to whether the switchover condition is met at a waypoint ahead in the direction of travel and to determine a target position for the autonomous driving mode at which the switchover condition is not likely to be met.

As explained, the driving operation is maintained in the method according to the invention, that is, the vehicle is moved on. For autonomous movement of the motor vehicle, however, it is necessary to define a direction of movement for the motor vehicle. The aim of the temporary operation of the driver assistance system in the second operating mode is to avoid or safely drive through an area in which the critical driving situation is present that led to the control device being switched to the second operating mode. An essential feature of the target position is that it lies in a range in which the switchover condition is not met, the driver assistance system not predicting a critical driving situation or a driving situation that is beyond the comfort range of a driver, for example.

[0015]

When the driving operation is continued, it can be provided that the driver assistance system guides the motor vehicle in such a way that a route desired by the driver is recognized and the driving operation is continued along this route.

It is therefore possible for the driver assistance system to be designed to evaluate ego data, in particular route data from a navigation system, and environment data to determine a desired route of the motor vehicle desired by the driver, the target position being on the target route lies. The driver assistance system is typically used for relatively short distances; for example, a few hundred meters, can be operated in the second operating mode, since critical driving situations are typically overcome after such routes. Therefore, in order to determine the route, it is often sufficient to calculate a route that follows the course of the road. However, it is entirely possible that the switchover condition is fulfilled in the area of an intersection or junction and the driver assistance system must therefore recognize the driver's will if a corresponding route is to be followed. This is particularly easy if the driver has planned a route with the aid of a navigation system, since this route can then simply be followed.

However, a large number of other vehicle systems can also be evaluated. For example, a set indicator can be interpreted as an indication that the driver wants to turn off the road being traveled on. However, typical traffic patterns can also be evaluated. Further methods for forecasting a route that is likely to be traveled are known for navigation systems. Such methods can of course also be used in the motor vehicle according to the invention.

[0016]

It is particularly advantageous if the driver assistance system is designed to determine the target position in such a way that the predicted traffic situation and / or a route allows safe handover of the vehicle guidance to the driver at the target position.

In the motor vehicle according to the invention, at least the control of the motor vehicle takes place completely autonomously, that is to say that the driver does not have any possibility of intervention during the operation of the driver assistance system in the second operating mode. This is particularly easy when using drive-by-wire systems in which the steering of the wheels is mechanically completely decoupled from the movement of the steering wheel. In such systems in particular, it is advantageous if the motor vehicle control is returned to the driver in a situation in which as few steering movements as possible are necessary, since the steering angle must be adapted to the steering wheel angle before the steering wheel can be reconnected to the steering of the wheels, which advantageously takes place over longer periods of time and / or generates at least minor disturbances in the driving trajectory. This can be largely compensated if the return transfer takes place in a suitable area, it being particularly advantageous if the route is relatively straight and a predetermined minimum distance from other road users is maintained.

[0017]

The driver assistance system can in particular be designed to switch from the second to the first operating mode when at least one downshift condition is present, the or one of the downshift conditions being that the switchover condition is not met and / or that the traffic situation allows the vehicle control to be safely returned to the driver and / or that the target position has been reached.

Failure to meet the switchover condition means that no critical driving situation, that is to say a driving situation in which the motor vehicle is moving in the physical limit range or beyond the comfort range of a driver, is to be expected. It is then no longer necessary for the driver assistance system to remain in the second operating mode. However, it is still advantageous to wait before handing over the vehicle control until this is possible without any problems in a corresponding traffic situation. As

explained, when changing to the second operating mode or during ongoing operation in the second operating mode, a target position can be determined which in particular can meet the two aforementioned conditions. It is thus at least predicted for the target position that the further mentioned conditions for switching back to the first operating mode are fulfilled.

[0018]

In the case of autonomous driving in the second operating mode, it is possible to guide the motor vehicle on a trajectory that has been precalculated at least in sections.

It is therefore advantageous if the driver assistance system is designed to determine a control trajectory between the current position of the motor vehicle and the target position and to control the motor vehicle along the control trajectory in the second operating mode. A large number of algorithms are known for determining trajectories for autonomous driving. So-called "best first" algorithms can be used particularly advantageously. With this type of search algorithm, trajectories are first calculated, which are expected to be particularly short Lead the way or particularly quickly to the goal. For example, an a * algorithm can be used.

[0019]

However, it is also possible that trajectories have already been calculated as part of the pre-calculation of future driving situations.

As explained at the outset, a change to the second operating mode preferably only takes place when there is at least one possibility of going through the critical situation. There is therefore at least one known trajectory that the motor vehicle can safely travel on. If the future driving situations have been calculated with the aid of trajectories, it is then possible to use the corresponding trajectories directly to control the motor vehicle, that is to say as a control trajectory.

[0020]

If a control trajectory is recalculated or if several trajectories for driving through the critical situation are known, an optimal control trajectory can be determined or selected.

The control trajectory can be optimized in particular with regard to safety-relevant parameters, such as the safety distance to obstacles or the distance between the acceleration forces that are necessary for driving the trajectory and a maximum value for the acceleration forces. In many cases, the space of the usable trajectories for the motor vehicle is sufficiently large so that further parameters, in particular for minimizing the stress on a driver, can also be taken into account in the optimization. In particular, attempts can be made to minimize the acceleration in the longitudinal and / or transverse direction. In addition, an attempt can be made to determine a trajectory that enables the vehicle control to be returned to the driver as promptly as possible. Often it is already possible to safely drive through a critical driving situation by means of a control trajectory that deviates minimally from a predicted driver's will. Of course, the physical limits of the motor vehicle are taken into account when calculating the control trajectory.

However, it is also possible to take into account the comfort limits of the driver as far as possible. The explained autonomous control of the motor vehicle can already be used to defuse a large number of critical driving situations. Nevertheless, it is advantageous to autonomously control further vehicle systems in the second operating mode by the driver assistance system. Thus, in the second operating mode, the driver assistance system can be designed for autonomous control of the brake systems and / or the engine and / or the steering and / or the preferably automatic transmission of the motor vehicle without the possibility of intervention by the driver. In particular, it is also possible to control individual wheels, in particular individual wheel brakes. It is also possible for the entire lateral guidance or the entire longitudinal and lateral guidance of the motor vehicle to be carried out by the driver assistance system. In this case, the motor vehicle can be moved along any pre-calculated trajectories that can be physically driven by the motor vehicle.

This is advantageous because, with exclusively autonomous control of the motor vehicle, unexpected interventions by the driver in other control systems can interfere with the execution of the calculated trajectories.

[0021]

The driver assistance system can in particular be designed to calculate several drivable trajectories starting from the current position of the motor vehicle with at least one boundary condition determined from ego data and / or environment data, and the switchover condition can be designed to evaluate the drivable trajectories.

The prognosis of future driving situations and the recognition of the switching conditions, in particular the fact that a driving situation requires driving in the physical limit range or beyond the comfort range of the driver, can thus be done by calculating a large number of possible trajectories and evaluating the trajectories. In particular, those trajectories are considered as drivable trajectories that can be carried out without impairing people, the motor vehicle and third-party objects. In particular, when determining the drivable trajectories, parameters of the motor vehicle itself, such as a maximum steering angle, maximum possible accelerations, the frictional force between the tire and the road or the like, can also be taken into account. The danger of the tra jectories can be ensured by applying boundary conditions.

[0022]

A particularly simple calculation of the trajectories is possible if the trajectories are initially determined exclusively as trajectories in spatial space.

However, it is also possible to calculate trajectories directly in such a way that they assign fixed times to certain locations or that a speed is additionally calculated at each location. Furthermore, trajectories can include further parameters, such as, for example, an orientation of a motor vehicle, in particular a float angle, that is to say the angle between the orientation of the motor vehicle and the direction of movement. It is also possible to calculate the trajectories using a forward or backward calculating simulation of the vehicle movement, which includes a large number of parameters, such as the eg and environment data already mentioned.

[0023]

For example, all drivable trajectories can be calculated that lead into a given road area.

The end points of the trajectories can be determined in such a way that they have a predetermined distance from the motor vehicle, or the trajectories can be calculated in such a way that they have a certain length of time.

[0024]

When calculating the trajectories, in addition to boundary conditions that ensure the physical drivability of the trajectories, boundary conditions can also be taken into account that relate, for example, to minimum safety distances to objects, comfort parameters such as maximum longitudinal or transverse accelerations, traffic rules or the like.

If moving objects are detected in the vehicle environment, the boundary conditions can in particular also make movement predictions for these objects. Particularly when taking into account moving objects, it is advantageous not to calculate the trajectories in pure spatial space, but in a space that has an additional time coordinate. In this case, moving objects can be described as an unusable volume in this space. It is often possible to restrict the space of the calculated trajectories by taking into account the target route desired by the driver. Such a target route can be determined, for example, by evaluating route data from a navigation system, ego data and / or environment data. Performs e.g. B. a planned route of a navigation system at an intersection to the right, the calculation of trajectories that lead along the further course of the road or to the left can initially be postponed. The temporal or spatial length of the trajectories can be adapted depending on various parameters, such as the speed being driven, the traffic density or the course of the road.

[0025]

It is possible for the driver assistance system to be designed to determine at least one driving area that begins at the position of the motor vehicle and can be driven into by the motor vehicle, the boundary condition or one of the boundary conditions being that the trajectories run completely within the driving area.

It is possible here for the driving area to be determined in such a way that areas blocked by obstacles are excluded from the driving area. However, it is also possible to initially leave areas blocked by obstacles in the driving area and to take existing obstacles in the driving area directly into account when calculating the trajectories, so that the obstacles are avoided by the calculated trajectories. This means that an area is known through which the trajectories can run. Typically, such an area is determined as the area of the roadway that does not include any obstacles, but it is also possible to exclude certain areas of the

roadway or to add additional areas to the driving area. Not every part of the driving range can necessarily be reached by a drivable trajectory, since the drivable trajectories are limited, for example, by the possible steering angle of the motor vehicle.

[0026]

It is possible that safety distances to obstacles are already taken into account when defining the driving area.

Alternatively, the However, safety distances can also be taken into account retrospectively, in that all trajectories are spaced from the edge of the driving area. It should be noted that the driving area is only independent of time if there are no moving obstacles in the vicinity of the vehicle. Moving obstacles can be taken into account by determining a time-dependent travel area. To simplify the calculation, however, it is also possible to initially exclude from the driving area all areas that are swept over by moving obstacles within a predetermined time interval. This enables a particularly simple calculation of trajectories even when moving objects are present and a time-dependent driving area, which is expensive in terms of computation, must only be used if no or very few trajectories have been found when using the previously determined driving area.

[0027]

The parameters describing the trajectories, in particular the location coordinates, are typically continuous variables.

As a result, even with a finite resolution for technical reasons, a large number of individual trajectories would have to be calculated in order to find the possible trajectories. Two approaches in particular are conceivable for reducing the number of trajectories. It is thus possible for the driver assistance system to calculate the drivable trajectories as at least one parameterized group of trajectories from a large number of drivable trajectories and / or as several individual drivable trajectories that are spaced apart by a predetermined or adjustable distance between their parameters, in particular the location coordinates, is trained. In the first case, the trajectories are at least partially specified as a continuous array of trajectories. For example, when using pure spatial trajectories, two boundary trajectories can be determined, from which the further trajectories lying in between are calculated as a function of at least one parameter. Corresponding parameterization is of course possible for several parameters at the same time.

[0028]

Particularly in the case of more complex calculation methods for the trajectories, for example a calculation of the trajectories using a simu

However, based on a physical model, such continuous sets of trajectories can be very complex to calculate. In these cases in particular, it is advantageous to determine discrete trajectories, the individual trajectories being spaced apart by a predeterminable distance. In this way, a discretization of the individual parameters is achieved with a predefinable resolution. In individual cases, however, it can also be advantageous to represent trajectories that include several parameters as a continuous family in some of the parameters and in a discretized manner in the other of the parameters.

[0029]

A large number of approaches are possible for calculating the trajectories.

As mentioned, it is particularly easy to initially only specify spatial curves as trajectories. In this case, driving tubes can first be determined within which there is no obstacle. In this case, a driving envelope denotes an area that can be completely covered by drivable trajectories. Such a driving envelope and the trajectories lying between the boundaries of the driving envelope can be described by first determining two geometric delimitation trajectories for the driving envelope which delimit the driving envelope. Such delimitation trajectories typically have a predetermined distance from the edge of a driving area. This means that they run past obstacles in the vehicle environment with a specified safety distance. If there is no obstacle between two of these delimitation trajectories, a driving path is typically formed by these two delimitation trajectories if all trajectories between them are passable.

In addition, an ideal trajectory can also be determined within the travel path, which describes, for example, the shortest route to a predetermined point or route section that can be traveled at the highest speed or the like.

[0030]

The further trajectories of the travel path can then be calculated by interpolating between the two delimitation trajectories or between the delimitation trajectories and the ideal trajectory.

Alternatively, it is also possible to vary the ideal trajectory at for example, by calculating trajectories which are adjacent to the ideal trajectory and which deviate from the ideal trajectory in only one direction and preferably have the same number or fewer turning points. If the explained method is carried out for each part of the driving area through which a driving path can be guided, at least those trajectories in the driving area can be determined that are typically traveled by vehicles and that can be driven at the highest speeds or at a given speed with the lowest forces lead in the transverse direction to the motor vehicle.

[0031]

In this context, it is essential that it is unnecessary to determine every drivable trajectory.

The calculation of the drivable trajectory initially only serves to determine whether a critical driving situation is likely to exist. Critical driving situations are, however, characterized by the fact that the parameters that enable the motor vehicle to continue driving are relatively sharply limited. However, this means that in the critical driving situations that are to be recognized, for example, trajectories with a large number of necessary turning points cannot be driven anyway. It is therefore sufficient if, as described, only simple trajectories with a few turning points are calculated.

[0032]

The driver assistance system can in particular be designed to determine at least one speed profile for each of the drivable trajectories.

In the simplest case, a speed profile can be determined on the basis of a purely geometric trajectory by including the centrifugal forces of the trajectory, which result from the mass of the motor vehicle, the speed of the motor vehicle at the point and the local curvature, i.e. the curve radius a predetermined or locally determined limit value are compared. The limit value for the centrifugal force corresponds to the frictional force between the motor vehicle and the road.

[0033]

It is possible that such a limit value is determined separately for each of the tires of the motor vehicle and with centrifugal forces that affect the

act on this wheel, is compared. This is particularly advantageous because, depending on the roll and pitch angles of the motor vehicle, different normal forces can act on the individual tires, so that the frictional force is different even with the same coefficient of friction. The coefficient of friction between the tire and the road can be fixed, but it is also possible to adapt it depending on, for example, the type of tire, the mileage of the tire, the local properties of the road, which were recorded by a camera, for example, or weather conditions.

[0034]

From the globally or locally determined maximum frictional force, a maximum drivable speed can thus be established for each point of the trajectory, possibly taking into account a safety interval for the frictional force.

If the maximum acceleration and deceleration values of the motor vehicle are also taken into account, a speed profile of the maximum possible speeds can be determined for each point of the trajectory.

[0035]

If moving obstacles are not taken into account in such a way that areas swept over by them in the observed time interval are completely excluded from the driving area, then speed limit values must anyway be taken into account for the trajectory calculation.

In this case, it is advantageous to determine at least two speed profiles for a trajectory, namely one for the maximum speeds and one for the minimum speeds at the respective location of the trajectory.

[0036]

Tesla EX1002 Page 1966 IPR2025-01034

In particular, conditions that operate directly on the set of drivable trajectories or those that derive conditions for further vehicle parameters from the drivable trajectories can be used as switching conditions for switching to the second operating mode of the driver assistance system.

For example, the driver assistance system can be designed to determine a limit value for a vehicle parameter from the drivable trajectories, and the switchover condition or one of the switchover conditions can be the exceeding or falling below the limit value. Of the Vehicle parameters can in particular be the current actual speed of the motor vehicle. The procedure for obtaining such a limit value will be explained using the vehicle speed as an example. As explained, it is advantageous if at least one speed profile was determined for each of the trajectories. In particular, a profile can be determined which indicates the maximum speeds for each point at which the trajectory can be driven with the maximum acceleration or deceleration values of the motor vehicle. This calculation makes it possible to determine a maximum speed of the motor vehicle at the current location of the motor vehicle for each of the trajectories, with which this trajectory can be driven.

[0037]

If the speed of the motor vehicle exceeds the highest of the speeds of the trajectories at the vehicle position at any point in time, then none of these trajectories can be driven.

The essential criterion for a critical driving situation is how close the current vehicle speed is to the fastest speed of the trajectories for the vehicle position. A speed that is 90% of the highest speed of the trajectories at the vehicle position can thus be selected as the limit value for the vehicle speed. A speed can also be selected at which a minimum number of trajectories or a travel path with a certain minimum width can be driven at a speed that corresponds to the limit value.

[0038]

If the limit value is to be varied as a function of the driver, for example in order to switch to the second operating mode when the driver leaves a comfort range, this can be done either by adapting the calculation of the limit value from the trajectories accordingly, or by the fact that the Calculation of the possible trajectories, narrower limit values are specified, as a result of which, for example, the maximum permissible transverse accelerations that occur when driving on the calculated trajectories are further reduced.

The procedure described above allows a particularly simple determination of whether the switchover condition exists. In the procedure described, however, only a single speed profile is taken into account. In particular in traffic situations in which there are several moving obstacles in the vicinity of the motor vehicle, or when operating the motor vehicle in a limit area in which, under certain circumstances, strong speed-dependent lateral displacements of the motor vehicle can occur, a separate determination of the geometric shape of the trajectory and the associated speed profile will no longer be possible. In this case, in particular, it can be advantageous to use a switchover condition that directly evaluates the drivable trajectories instead of a limit value for an actual size of the motor vehicle.

[0039]

Thus, the switchover condition or one of the switchover conditions can be a fall below a minimum value for the number of drivable trajectories or a width of a value range of at least one parameter that parameterizes a group of trajectories of the drivable trajectories.

The use of this switching condition is based on the idea that when driving far away from a physical limit area, or far within a comfort area that limits the possible trajectories through additional boundary conditions, a very large number of trajectories is always possible, since trajectories are always varied can and continue to meet all boundary conditions. However, the physical limit area or the limits of a comfort area are precisely defined by the fact that when leaving the physically possible area or the comfort area, the physical or comfort boundary conditions are no longer met by any trajectory, which means that no drivable trajectory can be calculated. The respective limit area in which switching to the second operating mode is to take place is thus characterized in that the number of drivable trajectories decreases sharply. If the trajectories are calculated as spaced discrete trajectories as described above, then such a decrease in the number of trajectories can be determined simply by comparing the number of trajectories with a minimum value.

As soon as this minimum value is undershot, the Um applies switching condition as fulfilled and the driver assistance system changes to the second operating mode. It is possible that trajectories which consistently fall below a minimum distance in at least one parameter are only counted as a single trajectory.

[0040]

However, if the drivable trajectories are shown as a parameterized group of trajectories, then a decrease in the number of trajectories corresponds to a restriction of the range of values for at least parts of the parameters of the group of trajectories.

In this case, the switchover condition should therefore be dependent on the width of the value range of at least one parameter of at least one of the families of trajectories. A large number of possibilities are conceivable for this. In this way, a phase space volume can be determined for each group of trajectories, in which the widths of the value ranges for the various parameters of each of the groups of trajectories are multiplied. However, it is also possible to evaluate only some of the parameters or a single parameter, in particular a latitude in the spatial area.

[0041]

The fact that the sum of the phase space volumes or the product of the selected parameters of the individual trajectories falls below a minimum value can therefore be used as a switchover condition.

However, it is also possible to take into account only some of the families of trajectories, for example only those that run along a target route. In particular, only the family of trajectories can be taken into account, the phase space volume of which is the largest, or in which the product of several selected parameters or a single parameter is the largest.

[0042]

It is of course possible to discard some of the trajectories before applying the switchover condition.

It is thus possible that only some of the boundary conditions are taken into account when calculating the trajectories and then, before evaluating the switchover condition, those trajectories are discarded or not taken into account that do not meet the other boundary conditions. In addition or as an alternative, various boundary conditions for calculating the drivable trajectories and for taking them into account when evaluating the switchover condition can also be used be used. For example, it is possible to first use limit values to calculate the drivable trajectories that describe a physical limit area, but before evaluating the switchover condition, those trajectories that lie beyond the driver's comfort range are discarded. It is thus possible to first determine whether a sufficient number of drivable trajectories are in the comfort range of the driver to allow the driver to steer the motor vehicle. If this is not the case, but trajectories in the comfort range of the driver are still possible, the motor vehicle can be guided by the driver assistance system with one of the trajectories in the comfort range.

However, if this is not possible, one of the drivable trajectories can be used for the autonomous guidance of the motor vehicle, which is physically possible but lies beyond the comfort range of the driver.

[0043]

The driver assistance system can preferably be designed to adapt at least one boundary condition and to recalculate drivable trajectories in the event that no drivable trajectory can be determined.

As mentioned at the outset, it is not always possible, especially when unexpected traffic situations occur suddenly, to determine a physically possible trajectory in the driving area under the boundary conditions used. A computation of a drivable trajectory may not be possible because certain boundary conditions were not selected in such a way that they correspond to actual physical limits, but, for example, in such a way that they describe a driver's comfort range. It is therefore advantageous if the driver assistance system is designed to adapt at least one boundary condition and to recalculate the drivable trajectories before the emergency trajectory is determined.

[0044]

In particular, it is possible that when calculating the drivable trajectories, only the area of the road itself, i.e. the area of a road that is intended for vehicle traffic, is considered as the driving area and thus a boundary condition for determining the drivable trajectory

rien forms. If the motor vehicle now leaves the lane area, for example due to a sudden steering movement by the driver or an unexpected traffic situation, the motor vehicle must cross an area that does not belong to the lane to return to the lane. It is advantageous if, in this case, the driving area is adapted in such a way that the area between the motor vehicle and the

roadway, insofar as it is free of obstacles, is added to the driving area. Even in cases in which collisions with other motor vehicles are to be avoided, it can be advantageous to add areas next to the road to the driving area.

[0045]

However, it is also possible to vary other boundary conditions.

For example, in some embodiments of the motor vehicle according to the invention, when calculating the drivable trajectories, the boundary conditions can be defined in such a way that initially only drivable trajectories are determined in a comfort range of the driver. In this case it is possible that instead of calculating an emergency trajectory, the conditions are initially adapted to the actual physical boundary conditions and the drivable trajectories are recalculated. In addition or as an alternative, it is also possible for safety distances or safety intervals to be reduced for certain parameters. In addition, some vehicle systems such as brakes, engines or the like can have a work area in which the component can be damaged. Typically, the boundary conditions when calculating the drivable trajectories in this case are initially selected in such a way that this operating range is avoided.

[0046]

It is possible that the driver assistance system is designed to switch to a third operating mode in which an emergency trajectory is determined in the event that no drivable trajectory can be determined, in particular after adapting the boundary conditions.

[0047]

Thus, if there is no physically drivable trajectory that avoids a collision with an obstacle, the control trajectory can be in this way

It should be agreed that personal injury in particular can be avoided and damage to one's own motor vehicle, other motor vehicles or third-party objects can be reduced as far as possible.

The basic procedure for calculating such a trajectory is known to the person skilled in the art and is therefore not explained in more detail.

[0048]

In the method according to the invention, a graduated intervention in the driving operation is thus possible.

It is initially possible to determine drivable trajectories under relatively narrow boundary conditions, which in particular take into account a driver's comfort range. If it is determined on the basis of these trajectories that the switchover condition is not met, which typically means that a large number of different trajectories are possible within the first boundary conditions, then there is no intervention in the driving operation and the driver remains in control of the motor vehicle. If the switchover condition is met and drivable trajectories have been determined under the first boundary conditions, the driving operation in the second operating mode can be continued along one of these drivable trajectories. This makes it possible in particular * to continue the ferry operation in the comfort range of the driver along a desired target route. If no drivable trajectory was determined under the first boundary conditions, one or more of these boundary conditions can be adapted. In particular, a restriction of the trajectory parameters to the comfort range of the driver can be abandoned.

If at least one trajectory is determined with the second boundary conditions formed in this way, the driving operation can be continued, but it is possible, for example, that the comfort range of a driver is left when the driving operation is continued. If no drivable trajectory can be determined even after adapting the boundary conditions, possibly multiple times, then an emergency trajectory is determined. With such an emergency trajectory, the target position is not reached, that is, the driving operation is not continued. With the calculation and execution of an emergency trajectory, the typical functions of a collision avoidance or collision consequence mitigation system are achieved, that is, attempts can or can be made to bring the vehicle to a safe standstill Consequences of collisions are minimized. In this way, in the motor vehicle according to the invention, it is possible to intervene in the driving operation, which is graded according to the criticality of the driving situation.

[0049]

When the driver assistance system is operated in the second operating mode, at least parts of the vehicle guidance are withdrawn from the driver.

In addition, there can be unusually high accelerations in the longitudinal or transverse direction of the motor vehicle. It is therefore advantageous if the driver assistance system is designed to control a notification device for giving an acoustic, haptic and / or visual notification when switching to the second operating mode and / or before switching to the first operating mode, as an indication of driver takeover. A note about the driver takeover is advantageous in order to point out to the driver that he should now be responsible for driving the motor vehicle again.

[0050]

The motor vehicle can have a communication device for wireless vehicle-to-vehicle communication and / or for wireless vehicle-to-infrastructure communication, the driver assistance system for determining environmental data by activating the communication device for communicating with information sources and / or for communicating with other motor vehicles to transmit warning notices, is formed in particular when switching to the second operating mode.

In particular, the communication device can receive information about at least one further motor vehicle, for example its position, speed, steering angle, trajectories and / or planned maneuvers. This information can be used to improve the prediction of movement for this motor vehicle, as a result of which more reliable planning of one's own driving operation is possible. However, it is also possible to access external databases via the communication device. Databases can in particular replace or supplement information in a vehicle's own navigation system. For reliable trajectory calculation, exact information about the course of the road, in particular angles of inclination, inclines, curve radii and Something similar is necessary. If such data are not stored in the motor vehicle or a navigation system, they can be called up wirelessly from a database, in particular at a time interval before driving on the corresponding road section.

[0051]

Sending a warning signal to other vehicles is particularly advantageous since the second operating mode is used in particular in emergency situations or when driving in the physical limit range or when driving beyond a driver's comfort range.

Thus, in the second operating mode, unexpected driving maneuvers or driving maneuvers are carried out at the physical limits of the motor vehicle with an increased probability. It is therefore advantageous for other motor vehicles to maintain an additional safety distance from their own motor vehicle. It is also possible for the communication device to transmit driving instructions to the other motor vehicles in order to be able to use a larger driving area in emergency situations, for example.

[0052]

Critical situations in which reliable control of the motor vehicle is no longer possible occur when the driver is no longer able to control the vehicle properly, for example because he is sick, overtired or overwhelmed by a situation.

If the driver is no longer able to control the vehicle properly, it is desirable to bring the motor vehicle to a standstill, at least in the medium term, but it can also be advantageous to initially continue to operate the motor vehicle and to drive it autonomously into an advantageous parking position. However, since in this case no return of the vehicle control to the driver is desired before the motor vehicle is parked, it is advantageous if the driver assistance system detects this case separately and switches to a separate operating mode.

[0053]

The driver assistance system can therefore be designed in a fourth operating mode for autonomous control of the steering and / or the braking systems and / or the engine and / or the especially automatic transmission of the motor vehicle without the possibility of intervention by the driver, and

the motor vehicle can be brought into a safe parking position. The parked motor vehicle is therefore not a traffic obstacle for other road users. In the fourth operating mode, it is brought to a safe parking position completely autonomously. The safe parking position can be relatively close, for example a hard shoulder on a motorway, but a longer distance can also be driven, for example to the next parking lot. In particular, if the driver is ill, for example a heart attack, it is also possible for an emergency call to be sent via a communication device of the motor vehicle.

[0054]

In particular, the motor vehicle can include a driver state detection means for detecting a driver state and the driver assistance system can be designed to switch to the fourth operating mode when a driver state is determined which indicates the driver's inability to drive.

For example, a driver's state can be determined by a camera and the determination of a seating position or an eye position. It is also possible, for example, to record the pulse or heartbeat of a driver or operator actions such as steering movements. Various detection means can be used to determine, in particular, driver fatigue and illness.

[0055]

In addition or as an alternative, it is also possible that the driver assistance system is designed to wait for an input from a driver to take over the driver when switching from the second operating mode to the first operating mode and to switch to the fourth operating mode if this input is not made within a predetermined time interval.

In particular, before changing to the fourth operating mode, the driver can be given a repeated notification, in particular with increasing intensity. This information can be supplemented by further interventions in the driving operation, such as, for example, a continuous slowing down of the motor vehicle or the like. A change to the fourth operating mode is advantageous in this case, since further operation of the motor vehicle is not possible is desired when the driver is unable or unwilling to take control of the vehicle again.

[0056]

In addition, the driver assistance system can be designed to switch to the fourth operating mode within a predetermined period of time when a predetermined minimum number and / or when a predetermined minimum frequency of switchovers is determined.

Regular switching of the driver assistance system to the second operating mode indicates that the driver regularly incorrectly assesses the driving situation or is no longer able to drive the motor vehicle. This can indicate that the driver is tired or unable to concentrate, is in an agitated state of mind, or is passed out. In this case, it can be advantageous to temporarily shut down the vehicle. The predefined period of time can in particular be a trip in the motor vehicle, i.e. the time from starting the motor vehicle to switching off the motor vehicle, but it can also be a predefined time such as one or two hours or a certain distance covered by the motor vehicle.

[0057]

When the motor vehicle changes to the fourth operating mode, it can be assumed that the driver is not able to drive.

It is therefore an emergency situation in which it is justified to restrict the freedom of movement of the other motor vehicles in order to enable the motor vehicle to be parked quickly and safely. It is therefore possible that the motor vehicle comprises a communication device and the driver assistance system in the fourth operating mode is designed to determine a target driving maneuver for at least one further motor vehicle and to control the communication device for transmitting the target driving maneuver to the motor vehicle, priority information being able to be transmitted in addition to the target driving maneuver .

[0058]

It can be provided that the motor vehicle is also designed to receive such messages, with the highest priority information being possible in particular, which indicates an emergency situation.

When receiving a Message with such highest priority information, the driver assistance system can be designed to carry out this target driving maneuver, as far as this is safely possible.

[0059]

Different drivers have very different comfort areas in which they can drive motor vehicles comfortably and reliably.

It is therefore advantageous if the switchover condition and / or the boundary condition for calculating the drivable trajectories and / or the determination of the control trajectory is dependent on a property of the driver that is predetermined or determined by the driver assistance system. In particular, it is possible for the driver characteristic to be adjustable through a self-assessment of the driver and an operating element. For example, the driver assistance system can be switched between the

"sporty" and "comfort" positions. However, it is also possible that characteristics of the driver, such as the age of the driver, the state of tiredness and the like, are recorded. As an alternative or in addition, however, it is also possible to detect or adapt the property by means of a sensor system of the motor vehicle. For example, the steering movements can be evaluated or the driver can be observed by a camera or another sensor system.

[0060]

In particular, it is possible that a driver-dependent warning condition is provided that can be implemented in the same way technically as the switchover condition, but with other boundary conditions, limit values or the like being used.

When this warning condition is met, a warning can first be output to inform the driver that trajectories that are beyond his comfort range are now to be driven. In addition, a switchover condition can also be adapted accordingly, so that a driver can initially be warned that his comfort range is being left and, once the comfort range has been exceeded, a switchover to the second operating mode can take place, so that autonomous driving is only just beyond that the comfort range of the driver takes place. The invention further relates to a method for controlling a motor vehicle, comprising at least one driver assistance system and at least one detection means, the motor vehicle being controllable by a driver in a first operating mode of the driver assistance system, comprising the steps:

[0061]

- Detection of ego data pertaining to the motor vehicle and surrounding data pertaining to the motor vehicle environment by the acquisition means,

[0062]

- Predicting future driving situations of the motor vehicle by evaluating the ego data and the environment data by the driver assistance system,

[0063]

- Check whether a switching condition that is at least dependent on the future driving situations is met by the driver assistance system,

[0064]

- Temporary switching to the second operating mode of the driver assistance system if the switching condition is met,

[0065]

- Autonomous control of the motor vehicle without the possibility of intervention by the driver to continue driving by the driver assistance system in the second operating mode.

[0066]

The method can of course be developed in the same way as the motor vehicle described.

[0067]

Further advantages and details of the invention emerge from the exemplary embodiments and the associated drawings.

Show:

[0068]

Fig. 1 is a schematic representation of an embodiment of the motor vehicle according to the invention, "

[0069]

Fig. 2 is a schematic representation for determining the possible

[0070]

Trajectories in the driver assistance system of the motor vehicle according to the invention,

[0071]

3 shows a traffic situation,

[0072]

4 shows a further traffic situation,

5 shows a third traffic situation,

[0073]

6 shows a fourth traffic situation,

[0074]

7 shows a flow chart of an exemplary embodiment of the method according to the invention, and

[0075]

8 shows a flow chart of a further exemplary embodiment of the method according to the invention.

[0076]

1 shows a motor vehicle 1 with a driver assistance system 2, which is designed for autonomous guidance of the motor vehicle 1 when a critical situation is determined when the vehicle is likely to move within a predetermined time interval in the physical limit range or beyond a comfort range of the driver.

The motor vehicle 1 is equipped with a drive-by-wire system, so that in normal driving operation the steering movements of a driver are recorded by a steering angle sensor 7 and the steering movements may be transmitted via the CAN bus 3 after further processing by a control system (not shown) the steering 8 are transmitted.

Actuations of a brake pedal (not shown), an accelerator pedal, an operating element of the circuit can also be transmitted to the corresponding devices of the motor vehicle 1.

During normal driving, the motor vehicle 1 is primarily driven by the driver.

The driver can either fully guide the motor vehicle or the driver can be supported in guiding the motor vehicle by driver assistance systems such as, for example, automatic distance control, a lane assistant or the like.

It is essential that in a first operating mode, which represents normal driving mode, the driver always has complete control over the vehicle, that is to say can override supporting driver assistance systems at any time.

During the operation of the motor vehicle 1, the driver assistance system 2 can always request information from a large number of vehicle systems via the CAN bus 3 in order to predict future driving situations of the motor vehicle 1 for a predetermined time interval.

The driver assistance system 2 can use data from a navigation system 4 to determine a planned route of the motor vehicle 1 and to query further information about the course of the road, for example a gradient or a gradient of the road, curve radii, local traffic rules and the like.

The data obtained from the navigation system 4 can also be supplemented by data from an environment sensor 13, which is designed as a camera.

In addition, a position determination device 5 for determining the vehicle position, for example a GPS sensor, is provided in the motor vehicle.

[0077]

The driver assistance system 2 can also obtain additional information about the surroundings via a communication device 6 by communicating, for example, with other motor vehicles via car-2-car communication or with infrastructure facilities and / or other motor vehicles via car-2-car communication.

In this way, information about the driving behavior of other motor vehicles and the like can be obtained directly in order to calculate an improved environment model.

The communication device 6 can also be used for wireless communication with databases, in particular Internet databases, in order to supplement the environment model.

[0078]

The driver assistance system 2 is also designed to read out a large number of sensors which measure a parameter of the motor vehicle 1.

Thus, the position of an automatic transmission 12 and / or the parameters of an engine control 11 can be read out.

A steering angle of the motor vehicle 1 can be determined from the data of a steering angle sensor 7 and sensors arranged on a steering system 8.

Further sensors are sensors on the brake system 0 or rotation sensors 9 on the wheels.

A dynamic model for one's own power vehicle and a detailed model of the surroundings can be calculated from the numerous ego data of the motor vehicle 1 and the numerous determined environment data, with the movement of other motor vehicles in particular being able to be predicted by a further dynamic model.

The driver assistance system 2 can determine possible future driving situations by determining several possible trajectories for the motor vehicle 1. Such trajectories can in particular run on a target route of the motor vehicle determined by the driver assistance system 2. The temporal or spatial length of the trajectories can depend on the traffic density and / or the vehicle speed.

[0079]

Such trajectories can be determined by first determining a driving area for the motor vehicle 1 in which driving operation of the motor vehicle 1 is possible.

In this area, trajectories are first determined, which can be geometrically driven by the motor vehicle 1, and then speed profiles for these trajectories can be determined. Alternatively, it is also possible here to calculate trajectories directly as trajectories that include both location and speed data and, under certain circumstances, other parameters.

[0080]

From the trajectories calculated in this way, it can be determined in a variety of ways whether a critical driving situation for the motor vehicle is to be expected.

In particular, at least one limit value for a vehicle parameter, in particular the vehicle speed, can be determined from the possible trajectories and when this limit value is exceeded, for example when a maximum speed determined from the trajectories is exceeded, a critical state can be determined and the second operating mode can be switched to the operation of the motor vehicle takes place autonomously without the possibility of intervention by the driver. As an alternative or in addition, the driver assistance system 2 can also evaluate the trajectory data directly. In particular, it is evaluated whether an area covered by the trajectories, that is to say a driving tube, has a certain minimum width or whether a certain minimum number of spaced trajectories rien can be driven by the motor vehicle. If the minimum number of trajectories or the minimum width of the travel path is not reached and if at least one drivable trajectory has been determined, the driver assistance system 2 switches to the second operating mode.

In the second operating mode, the steering 8, the brake system 10, the motor 1 1 and the automatic transmission 12 are controlled autonomously by the driver assistance system 2, in such a way that the motor vehicle 1 is moved along a control trajectory that is determined by the control device 2 from the drivable trajectories is chosen.

[0081]

It can also be determined whether a safely drivable trajectory is even possible for the motor vehicle.

A "failure to find" a drivable trajectory can have various causes. For example, when determining the drivable trajectory, limit values can be used that depend on a comfort range of the driver. The driver's comfort range can be preset using an operating element 14. During ongoing operation of the motor vehicle 1, the driver assistance system 2 can also evaluate the trajectories driven by the driver and adjust the comfort range accordingly. Failure to find a drivable trajectory then only means that the driver has to leave the comfort range. Other limit values can then be set that still ensure that the trajectory determined is physically drivable, but driving the motor vehicle 1 along this trajectory is beyond the comfort range of the driver, so, for example, relatively large lateral accelerations occur.

[0082]

Failure to determine a drivable trajectory can, however, also be due to the fact that no safely drivable trajectory exists in a predefined driving area.

In this case, the driver assistance system 2 can calculate safe trajectories by redefining the driving area and adding, for example, areas next to the roadway to the driving area and then determining new trajectories. However, it is also possible that, in particular in the event of an unexpected occurrence of a traffic situation, it is not possible to calculate a trajectory in which safe driving is possible. Depending on the driving behavior of other motor vehicles, situations are possible in which an accident caused by one's own motor vehicle 1 cannot be avoided. In these cases, it is possible for the driver assistance system 2 to switch to a third operating mode in which it calculates an emergency trajectory such that damage to people, to one's own motor vehicle and to third-party vehicles is minimized.

[0083]

The determination of trajectories for the motor vehicle 1 and the evaluation of these trajectories with regard to the fulfillment of switchover conditions in different operating modes will be explained later with reference to the driving situations shown in FIGS. 2 to 6.

The corresponding methods for controlling a motor vehicle are described with reference to FIG. 7.

[0084]

The driver assistance system 2 can evaluate the data from a driver state detection means 17.

The driver state detection means 7 is designed as a camera which records an image of the driver and, for example, detects the blinking of the eye or a seated position of the driver and deduces a driver state therefrom. Further information about a driver's state can be determined by evaluating steering movements or other control interventions by the driver. The driver assistance system 2 can use this input data to recognize a driver's status and, in particular, to determine when a driver is not fit to drive. Such an inability to drive the driver can be caused, for example, by illnesses, in particular a heart attack or fatigue of the driver.

[0085]

If such a driver state is determined, then the motor vehicle 1 should typically no longer be operated.

Direct parking of the motor vehicle 1 would, however, lead to the motor vehicle stopping in a potentially unfavorable position for traffic. The driver assistance system 2 is therefore designed to switch to a fourth when a driver state is determined which indicates that the driver is incapable of driving To change operating mode in which it controls the motor vehicle autonomously to a safe parking position. Such a safe parking position can be, for example, a hard shoulder on a motorway, a parking lot or the like. In particular, if a condition of the driver who is unfit to drive due to illness is determined, it is also possible for the driver assistance system 2 to send an emergency call signal via the communication device 6.

[0086]

IPR2025-01034
Tesla EX1002 Page 1975

The motor vehicle should be parked safely as soon as possible.

In numerous traffic situations, in particular when driving in the passing lane of a motorway, a path to a safe parking position can, however, be blocked by other road users. In this case, the driver assistance system 2 can determine target driving maneuvers for further motor vehicles by evaluating the environment data and transmit these to these motor vehicles via the communication device 6. It is possible that priority information is transmitted with the target driving maneuver, which indicates to the other motor vehicles that there is an emergency situation and that the driver of motor vehicle 1 is in an unfit state.

[0087]

Accordingly, upon receipt of a target driving maneuver with a corresponding priority by the communication device 6, the driver assistance system of the motor vehicle 1 changes to a fifth operating mode of the driver assistance system 2, in which the received target driving maneuver is carried out insofar as this is safely possible.

Through the use of priority information and the transmission of target driving maneuvers, it is possible to park a motor vehicle 1 particularly quickly and particularly safely if the driver is unfit to drive.

[0088]

The communication device 6 for communication with other vehicles can also be used in cases in which other critical driving situations are determined.

In the simplest case, when changing to a second or third operating mode in which the motor vehicle is controlled autonomously, the driver assistance system 2 can be a critical situation is predicted to control the communication device 6 to transmit a warning signal to other motor vehicles. To warn the driver himself when changing to or from the autonomous driving mode, a notification device 15 is provided which notifies the driver acoustically.

[0089]

FIG. 2 shows a driving situation in which the motor vehicle 1 is moving towards a curve 26.

Using this representation, a possibility for determining possible trajectories for the motor vehicle is to be explained as an example. The driver assistance system 2 of the motor vehicle 1 has a large number of ego information about the motor vehicle available. In addition to information about a planned route of the motor vehicle 1, which describes, in particular, a movement of a motor vehicle over a longer period of time, these ego data include data about the actual state of the motor vehicle such as the speed of the motor vehicle 1, the amount and direction of which is indicated by the arrow 19 , an angle between motor vehicle 1 and the course of the road and an angle between motor vehicle 1 and direction of movement, the so-called float angle, the vehicle mass, the position of the vehicle's center of gravity and information about the individual wheels 18, in particular a steering angle of the wheels 18, the angular speed of the wheels 18 and the Coefficient of friction of the wheels 18. Information about the other parameters of the motor vehicle, such as maximum acceleration and braking power, can also be included in the calculations.

A large number of these parameters can be determined by sensors in the motor vehicle 1, but it is also possible that individual parameters, for example the coefficients of friction of tires or the maximum deceleration and acceleration, are already stored in the motor vehicle 1.

[0090]

In addition to the ego data, an environment model that is as precise as possible is necessary to calculate the possible trajectories.

Parameters of the environment can for example be taken from a database integrated in the navigation system 4, but it is also possible to use further vehicle-internal data or external databases. Such stored data can can be supplemented by data from the vehicle sensors, in particular camera data.

[0091]

In the traffic situation shown in FIG. 2, there are initially no further motor vehicles or other moving obstacles.

Here, only the determination of an environment model without moving obstacles and the calculation of trajectories for this case will be discussed. For this reason, only environment data that relate to the roadway are initially taken into account as environment data. A roadway can be described by a local radius of curvature 21 of the roadway, a local roadway inclination 24 and a local roadway gradient 25. On the basis of this data and the ego data of the motor vehicle, possible trajectories can be calculated in a variety of ways. In the following, a calculation of the trajectories is to be used as a simple example, in which trajectories are initially determined as pure locus curves, for which at least one possible speed profile is determined in a separate step. Of course, it is alternatively possible to use more precise methods for calculating trajectories, which for example take into account the roll and pitch angles of the motor vehicle or can also calculate a drift movement of the motor vehicle, i.e. a movement with a high side slip angle.

[0092]

For the purely geometric calculation of trajectories, the limit trajectories 22 and 23 can first be calculated, which limit the hose that the vehicle can drive on.

These limit trajectories 22, 23 are determined on the one hand by the limited maximum steering angle of the motor vehicle 1 and on the other hand by the driving range. In the example shown in FIG. 2, the driving range is selected such that it is always possible to pass an oncoming motor vehicle, the motor vehicle always being on the road. The boundary trajectories 22, 23 thus run away from the motor vehicle essentially parallel to the boundaries of the roadway. These limiting trajectories 22, 23 are curved only in the immediate vicinity of the motor vehicle, since the steering angle of the motor vehicle is limited. It is possible that the course of the Be Boundary trajectory 22, 23 deviates from the course of the roadway if the course of the roadway exhibits sudden changes in direction which have an angle greater than the maximum steering angle of the motor vehicle.

[0093]

In addition, an ideal trajectory 20 is calculated, which can be calculated using an a * method.

The geometrically possible trajectories can be determined by determining a multiplicity of intermediate trajectories between the ideal trajectory 20 and the boundary trajectories 22, 23. The steering angles can be varied in the area of the actual position of the motor vehicle in order to obtain a continuous transition between the various predetermined trajectories. The trajectories lying between the trajectories 20, 22, 23 can, however, be determined in a variety of other ways, but in particular only those trajectories are determined which have a predetermined number of turning points at most. Trajectories with a large number of turning points can typically only be driven at significantly lower speeds than those with a large number of turning points. They are therefore not essential for moving the motor vehicle in the physical limit area.

[0094]

In addition, it should be noted that it is also possible to precalculate only the trajectories 22, 23 and then fill the space between these trajectories by interpolation between these trajectories.

The geometric trajectories can either be determined as individual trajectories by calculating trajectories with a predetermined distance, for example of a few cm. However, it is also possible to calculate the trajectories as one or more sets of trajectories that are parameterized using at least one parameter. For example, trajectories can be defined via a strength of the curvature and a length of the curved region or the like. If value ranges are specified for the parameters in such a description of the trajectories, it is possible to represent a large number of trajectories in a very compact manner. A speed profile can then be assigned to the individual calculated trajectories. If the trajectories are defined as a group of trajectories, it is also possible to parameterize the speed profile in the same way. The speed profile describes a course of the speeds of the motor vehicle 1 during a movement along the trajectory, with a movement along the trajectories at these speeds fulfilling one or more boundary conditions.

A decisive boundary condition here is that the centrifugal force acting on the motor vehicle 1 in the curve does not exceed the static friction force between the tires 18 of the motor vehicle 1 and the road. In the simplest case, the static friction force between the motor vehicle and the road can be determined from the vehicle mass and a coefficient of friction between the road and the tire. However, it is also possible to take into account, for example, the pitch and roll angles of the motor vehicle, as a result of which the normal forces on the individual tires of the motor vehicle differ from one another and thus different frictional forces exist for each of the tires 18 of the motor vehicle 1.

Tesla EX1002 Page 1977 IPR2025-01034

[0095]

The coefficient of friction for the tires is determined depending on the type of tire for the motor vehicle.

It is also possible to adapt this coefficient of friction for the tires depending on the driving performance of the tire or to determine it dynamically in certain driving situations. A coefficient of friction for the roadway can be estimated as a fixed value. However, it is advantageous to adapt this value as a function of information, for example from a navigation system and one or more vehicle sensors. The type of road surface is determined by a camera or the data from a navigation system. A good prediction for the coefficient of friction can be determined from the type of road surface. In addition, dirt on the road can be detected by a camera or an image evaluation and the local coefficient of friction can be adjusted accordingly. In addition, weather conditions, in particular the temperature and humidity of the road, can be taken into account. By comparing the frictional force between the motor vehicle 1 and the road or the individual tires 18 and the road with the centrifugal forces occurring for the trajectories, limit speeds can be determined for which the frictional force and the centrifugal force are the same.

However, additional accelerations due to acceleration or braking of the motor vehicle can also advantageously be taken into account in this comparison. The amount of the vector sum of the longitudinal and lateral acceleration of the motor vehicle multiplied by its mass must not exceed the frictional force. This corresponds to the principle of the Kamm circle. Typically, a maximum speed profile is determined for a trajectory, with in particular safety distances being provided between the acceleration forces acting on the motor vehicle through the trajectory and the frictional force when determining the maximum speed profile.

[0096]

As a result, there is a multiplicity of drivable trajectories in the driver assistance system 2, each of which has a locus and a speed profile assigned to the locus.

From the trajectories determined in this way, it can be determined in a variety of ways whether a critical driving situation is present. Trajectories that do not meet certain boundary conditions, in particular an initial speed that is less than the current speed of motor vehicle 1, can be discarded and then the number of trajectories that have been determined or the range of values of at least one parameter of a family of trajectories can be determined.

[0097]

If a driving situation is not critical, a large number of trajectories are always possible for the motor vehicle.

The closer the motor vehicle moves to the edge of a comfort area or a physical limit area, the fewer trajectories are possible for a journey within the comfort area or within the physical limit area. In this way, the number of trajectories determined can be used, taking into account the corresponding boundary conditions or the width of the value ranges, when determining parameterized trajectories determine whether there is a critical driving situation. Alternatively, however, limit values for at least one actual parameter of the motor vehicle can be determined from the determined trajectories. In the simplest case, the speed values at the starting point can be evaluated for each of the trajectories and an upper limit for the speed of the motor vehicle 1 can be determined by using, for example, a speed value with which a minimum number of trajectories can be driven, or a certain percentage of the Maximum value of the speed of the fastest possible trajectory does not exceed.

[0098]

Since a large number of trajectories are already present when using trajectories to determine the existence of a critical driving situation and thus a switchover condition, it is particularly easy to determine a control trajectory, since this can be selected from the already calculated drivable trajectories.

If, however, it is determined during the calculation of the trajectories that no trajectory is possible under the specified limit conditions, an emergency trajectory must be calculated, it being possible to adapt the limit conditions for calculating the trajectories.

[0099]

The fulfillment of the switchover condition and the choice of a control trajectory will be shown below.

If motor vehicle 1 is moving at low speed, then all trajectories between boundary trajectories 22, 23 can be driven. The geometric shape of the calculated trajectories is only limited by the specification of a maximum number of turning points. The switchover criterion is the width of the family of trajectories at the apex of the curve 26, that is to say, at low speeds, the distance between the limiting trajectories 22 and 23 perpendicular to the direction of travel.

[0100]

At higher speeds of the motor vehicle 1, some of the trajectories that can be driven at low speeds can no longer be driven.

In the physical limit area, only one or more discrete ideal trajectories can be driven. With increasing speed, the geometric width of the family of trajectories narrows until only the ideal trajectory is left 20 is mobile. If the width falls below a predefined limit value, the driver assistance system changes to the second operating mode and guides the motor vehicle 1 autonomously along the ideal trajectory 20.

[0101]

After crossing curve 26, a wide array of trajectories can be driven again.

The driver assistance system can thus switch to the first operating mode depending on the traffic situation.

[0102]

3 shows a traffic situation in which the driving range of the motor vehicle 1 is restricted by further motor vehicles 27, 29 which represent moving obstacles.

The driver assistance system 2 of the motor vehicle 1 calculates a target position 31 for the motor vehicle 1, di4e lying on the target route of the motor vehicle. The motor vehicle 1 moves at a higher speed than the motor vehicle 27 driving in front of it. If the motor vehicle 1 continues to move at increased speed despite a relatively small distance from the motor vehicle 27, it can be assumed that the driver of the motor vehicle 1 would like to overtake the motor vehicle 27. In this case, driver assistance system 2 must determine whether it is possible to overtake motor vehicle 27 and whether this may lead to a critical driving situation. By using the sensor systems of the motor vehicle 1 and known algorithms for motion prediction, a trajectory 28 for the motor vehicle 27 and a trajectory 30 for the motor vehicle 29 can be predicted. To simplify the illustration, it should be assumed that the motor vehicle 1 continues to move at an essentially unchanged speed.

[0103]

If the vehicle continues to move at the same speed, it is possible to determine the areas 34 and 35 which are swept over by the motor vehicles 27 and 29, respectively, until the motor vehicle 1 has passed the respective motor vehicle.

These areas 34, 35 must be excluded when calculating the trajectory of the motor vehicle 1 in order to avoid collisions. It should be noted here that a more complex calculation of the trajectory of the motor vehicle 1 is possible, for example by creating the trajectories in a three-dimensional space from two location coordinates Time coordinates can be planned, with moving obstacles blocking parts of this three-dimensional space. Such a method allows a larger number of trajectories to be planned, which in some cases can lead to improved driving behavior, but such a calculation is significantly more complex.

[0104]

In FIG. 3, the driving area is thus defined by the area of the road as well as by the exclusion of the areas 34 and 35 which are passed by the motor vehicles 27 and 29.

If the additional boundary condition is placed on the geometric movement curves that the steering angle of the motor vehicle 1 is limited, then the limitation trajectories 32 and 33 can be determined. Subsequently, further intermediate trajectories can be determined between the trajectories 32 and 33 and speed profiles can be determined. It should be noted here that in this case further boundary conditions must be set for the speed profiles, since a significant deviation of the speeds from the specified values leads to other areas 34 and 35 being swept over by the motor vehicles 27 and 29. In the example shown, there is a sufficiently wide driving envelope between the boundary trajectories 32 and 33. Even a slight increase in the speeds of the vehicle 27 or 29 could, however, lead to a significant reduction in the width of the travel path and thus to the fact that only a small number of trajectories would be possible, as a result of which a critical situation could be determined.

In the case of a critical driving situation, one of the predetermined trajectories can be selected as the control trajectory.

[0105]

In addition, it should be noted that, by varying the speed of the motor vehicle 1, further geometric travel tubes are of course possible or the illustrated travel tube is blocked.

For example, a significant reduction in the speed of the motor vehicle 1 would result in the shown driving path no longer being drivable, but a new driving path would be possible that describes remaining behind motor vehicle 27 until point 31 is reached. 4 shows a further traffic situation, on the basis of which it is shown what influence a target route has on the determination of the possible trajectories or the control trajectory. In the traffic situation shown, the motor vehicle 1 is moving towards a junction, with an oncoming motor vehicle 37 turning into the junction 36 in such a way that the straight route of the motor vehicle 1 is blocked. The junction opens into a one-way street that leads away from the junction 36. Both lanes of road 42 thus lead in the same direction of travel. The driver assistance system 2 of the motor vehicle 1 can determine separate groups of trajectories 39 and 41 in the traffic situation shown, the group of trajectories 39 describing a turning into the road 42 and the group of trajectories 41 describing a further movement along the original road.

If the target position for determining the groups of trajectories were to be arbitrary, both target position 38 and target position 40 could be determined. In this case, if the driver assistance system of the motor vehicle 1 were to detect a critical situation, for example because the speed of the motor vehicle 1 is relatively high, either a trajectory from the group of trajectories 41 or from the group of trajectories 39 would be determined depending on the further determination parameters for a trajectory. This would make it possible for the driver assistance system to autonomously control the motor vehicle in a different path than that desired by the driver.

[0106]

In order to achieve the greatest possible acceptance of the driver assistance system, however, it is advantageous if, as far as possible, autonomous control of the motor vehicle is carried out in such a way that it is easily accepted by the driver, that is, that it is preferably carried out along a target route, for example by a navigation system is planned or is recognized by a set indicator or the like.

If the driver assistance system 2 of the motor vehicle 1 detects that a route turning to the right is planned, the target position 38 can be determined, but the target route runs straight ahead, the target position 40 can be determined. As an example, it should be assumed that a turn into road 42 is desired. The target position 38 is thus determined. When calculating the drivable trajectories, only the cluster of trajectories 39 can now be determined, since the cluster of trajectories 41 can be driven, but does not lead in the desired direction. If, during the evaluation of the group of trajectories 39, it is determined by the driver assistance system 2 of the motor vehicle 1 that a switchover condition is met, i.e. autonomous driving of the motor vehicle is to take place, at least one trajectory is determined on which the motor vehicle can safely travel within the group of trajectories 39 is possible, this trajectory can be determined and driven as a control trajectory.

The driver assistance system 2 thus intervenes minimally in the driving operation of the motor vehicle 1, so that although the driver is temporarily relieved of driving the motor vehicle, the driving of the motor vehicle continues at least essentially along a route desired by the driver.

[0107]

Depending on the speed of the motor vehicle 1 and the further movement of the motor vehicle 37, it may be that no trajectory of the group of trajectories 39 can be traveled by the motor vehicle 1.

In this case, the control device 2 can change or cancel a boundary condition for calculating the trajectories. In the case shown, the restriction of the choice of the target position to the road 42 can be abandoned, as a result of which both the trajectories of the group of trajectories 39 and the trajectories of the group of trajectories 41 can be calculated. In the case described, however, the trajectories of the group of trajectories 39 cannot be driven due to other boundary conditions taken into account, as a result of which in this case the motor vehicle can be guided along one of the trajectories of the group of trajectories 41 to the target position 40.

[0108]

As a result of the procedure described, the driver assistance system 2 of the motor vehicle 1 can react flexibly and in stages to the traffic situation shown.

If it is determined that all or a large number of the trajectories of the group of trajectories 39 can be driven under the further boundary conditions, then the driver assistance system 2 does not intervene in the driving mode of the motor vehicle stuff, since it is initially assumed that the driver of the motor vehicle can steer in a controlled manner along one of the possible trajectories. If, however, only a small fraction of the trajectories of the group of trajectories 39 is still possible under the further boundary conditions, this can be interpreted as a critical driving situation and the motor vehicle 1 can be controlled autonomously by the driver assistance system 2. The autonomous control of the motor vehicle excludes the driver at least from the control of the motor vehicle, whereby the complete lateral guidance or the complete longitudinal and lateral guidance can be carried out autonomously by the vehicle, but it continues to move the vehicle along a route that is likely to correspond to the route requirements of the driver .

The short-term wishes of the driver are ignored for safety reasons, with medium-term travel goals still being achieved. However, if the analysis of the future driving situations determines that all trajectories of the array of trajectories 39 of the motor vehicle 1 are not safely navigable under the other given boundary conditions, a deviation from the driver's will occurs and the motor vehicle is controlled along a route not desired by the driver. With this control it is also possible to continue driving the motor vehicle, which in particular prevents the motor vehicle from being parked in an undesired position. If no drivable trajectory can be determined even after adapting the boundary conditions, then in one

[0109]

i

[0110]

In the third operating mode of the driver assistance system 2, an emergency trajectory can be calculated in order to avoid collisions or to reduce the consequences of collisions.

[0111]

FIG. 5 shows an example of a further traffic situation in which the motor vehicle 1 is traveling along a road on which both lanes are blocked by oncoming vehicles 43 and 44.

Since both lanes in front of motor vehicle 1 are blocked, there is no continuous driving area between motor vehicle 1 and area 51 in which the target positions that are to be reached by a trajectory of motor vehicle 1 are located, as long as the driving area is defined exclusively as the roadway.

In this case, an attempt is made to assign drivable trajectories for motor vehicle 1

calculate, it is determined that no trajectory leads motor vehicle 1 to a target position in area 51. The control device must therefore determine an emergency trajectory or at least change one of the boundary conditions that are used when calculating the drivable trajectories. These boundary conditions can be, for example, maximum accelerations, maximum component loads or the like. However, it is often particularly advantageous to adapt a driving range. In the situation shown in FIG. 5, for example, a camera on motor vehicle 1 can determine that there are no obstacles in areas 45 and 46 that are next to the roadway and that the surface of areas 45, 46 is apparently drivable. Therefore, in the situation shown, in which initially no drivable trajectory can be determined, the areas 45 and 46 can be added to the driving area, whereby trajectories are within a driving path delimited by the edge trajectories 47 and 48 and within a driving path delimited by the edge trajectories 49 and 50 become possible.

The driver assistance system 2 of the motor vehicle 1 can now select one of the trajectories within these driving tubes, taking into account further boundary conditions, and thus determine a safe trajectory to a target point in the area 51.

[0112]

As has been explained with reference to FIG. 1, it is also possible for the motor vehicle 1 to recognize when a driver is incapable of driving.

In these cases it is desirable to park the motor vehicle 1 promptly, but a safe parked position should first be achieved. This is possible because the driver assistance system 2 is operated in a fourth operating mode in which the motor vehicle is autonomously controlled up to the safe parking position.

[0113]

In the situation shown in FIG. 6, the motor vehicle 1 is moving in a passing lane 52 of a motorway at the point in time at which the driver's incapacity to drive is determined.

A position on the hard shoulder 55 is to be reached as a safe parking position. During the autonomous travel of the motor vehicle, it is therefore necessary to cross the middle lane 53 and the right lane 54. Moving on the middle lane 53 the motor vehicles 56 and 57, in the right lane 54 the motor vehicles 58, 59, 60. This shows a typical driving situation on motorways in which the traffic density is high in the right lane 54 and the middle lane 53. In such cases, long periods of time may be necessary to move a motor vehicle 1 onto the hard shoulder 55.

[0114]

In order to enable the motor vehicle 1 to be parked more quickly in this situation, the driver assistance system 2 can control a communication device 6 of the motor vehicle 1 in order to transmit target driving maneuvers to the motor vehicles 56, 57, 58, 59 and 60.

With the target driving maneuver, in particular priority information can be transmitted which indicates that the motor vehicle 1 is in an emergency situation, which causes the motor vehicles 56, 57, 58, 59 and 60 to follow the transmitted target driving maneuver as far as possible.

[0115]

7 shows the basic structure of a method for controlling a motor vehicle.

During normal driving of the motor vehicle, i.e. while the motor vehicle is being driven by the driver or by driver assistance systems in such a way that the driver can override the control interventions of the driver assistance systems at any time, ego data and environment data are continuously recorded in step S1. A large amount of information about the roadway and the surroundings of the roadway, in particular roadway inclinations, inclines, curve radii, roadway widths and information that enables conclusions to be drawn about the coefficient of friction of the road, can be recorded. After the position of the motor vehicle has been determined, these data can be taken from local databases or databases that are accessed wirelessly. In particular, the database of a navigation system can be used. In addition, ego data of the motor vehicle that are stored or recorded by sensors arranged in the motor vehicle can be recorded. The data from moving obstacles, in particular from other motor vehicles or pedestrians, can also be recorded, with future movements of moving obstacles being mapped by a movement model.

From the data collected and determined in step S1, future driving situations of the motor vehicle are determined in step S2 for a predetermined time interval. To determine the future driving situations, several possible trajectories are calculated for the motor vehicle.

[0116]

In step S3 it is checked whether a switchover condition is met.

The switchover condition depends at least on the future driving situations. It can thus be recognized that the motor vehicle will move close to a physical limit area in the future. Alternatively, it can be recognized that the motor vehicle can only be guided in future driving situations in such a way that it is at the edge of a driver's comfort range. The switchover condition depends on the driving situation and optionally on a characteristic of the driver. If such a switchover condition is not met in step S3, the method is repeated from step S1.

[0117]

However, if the switchover condition is met in step S3, there is a temporary switchover to the second operating mode of the driver assistance system.

In this second operating mode, the motor vehicle is steered autonomously, that is to say without the possibility of intervention by the driver. The motor vehicle is controlled in such a way that the driving operation is continued as far as possible, that is to say that the motor vehicle continues to move at least until a critical situation has been overcome. During autonomous driving, it is checked in step S5 whether a downshift condition for shifting back into the first operating mode is fulfilled. A switch-back condition is that the switch-over condition is not fulfilled, that is, that the critical driving situation has been overcome and that the vehicle's environment and ego data indicate that it is possible to safely transfer the vehicle guidance back to the driver. If the switch-back condition is not met, the autonomous ferry operation is continued in step S4. If the downshift condition is met, the motor vehicle continues to travel under the guidance of the driver. In this case, an additional step, not shown, is introduced in which a readmission request is issued to the driver and only after a driver action has been recognized, the one

Return acceptance indicates that control of the motor vehicle is being returned to the driver.

[0118]

8 shows a further exemplary embodiment of a method for controlling a motor vehicle.

As is obvious to a person skilled in the art, some of the steps shown are optional and represent advantageous versions of the method.

[0119]

As has already been described in relation to FIG. 7, the operation of the motor vehicle also typically takes place in the method shown in FIG. 8 in such a way that the motor vehicle is guided by the driver.

During this operation, in step S1 1, as was explained in relation to step S1 in FIG. 7, a large number of eg and environment data is collected, and movement models for moving obstacles are created and evaluated. In step S12, a driving area between the actual position of the motor vehicle and the area in which one or more target positions are located is determined from the data determined in step S1 1. The driving area comprises the entire roadway or certain lanes of the roadway, with the exception of areas that are blocked by fixed or moving obstacles.

[0120]

In step S13, a plurality of trajectories is determined in the area determined in step S12.

The trajectories are determined by evaluating certain boundary conditions that result from the egound environment data and, in particular, that restrict the trajectories to the driving area. Further boundary conditions for calculating the trajectories can be, for example, maximum accelerations for the motor vehicle that result from a frictional force between the road and the tires. In addition, it is also possible to take driver properties into account when determining the boundary conditions. For example, it is possible that a driver has set a sporty or comfortable driving behavior for the motor vehicle before starting the journey. The possible parameter range of the trajectories can also be restricted according to this setting. The calculation of the trajectories can initially be carried out by pure calculation of locus curves and a subsequent SO

[0121]

Determination of speed profiles take place along these locus curves, but trajectories can also be calculated which already include locations and speeds or locations and times and which can also include further parameters.

Trajectories are calculated individually or as parameterized groups of trajectories with assigned value ranges for the parameters.

[0122]

In step S14, individual trajectories can be discarded or value ranges can be excluded from families of trajectories that do not meet certain additional boundary conditions.

In particular, if complex calculation methods are used for the trajectories in step S13 that take into account a large number of parameters, it is often advantageous not to apply some boundary conditions first and then to remove trajectories that do not meet these boundary conditions in step S14 from the set of calculated trajectories . However, it is also possible that initially in step S13 trajectories are calculated under relatively wide boundary conditions, for example the boundary condition that the

trajectory is physically drivable, and in step S14 narrower boundary conditions are used, for example that a trajectory can be driven within a driver's comfort range is. A superset and a subset of trajectories can thus be formed, with an attempt being made first to move the motor vehicle within the subset of the trajectories, it being possible to expand the trajectory space to the superset if necessary.

[0123]

In step S15 it is checked whether a switchover criterion is met by the trajectories determined in steps S13 and S14.

Such a switchover criterion can in particular relate to the width of the driving tubes or the number of trajectories. In the simplest case, the number of calculated trajectories can be compared with a limit value. This is possible in particular if the parameters of the trajectories have been discretized beforehand, that is to say continuous trajectory families are represented by a plurality of individual trajectories which are spaced apart in the parameter space. This means that there are a certain amount closer to each other Trajectories considered equivalent and represented by a single trajectory. Alternatively, however, it is possible that in steps S13 to S14 sets of trajectories, that is to say in particular parameterized driving tubes, were calculated, in which case the value range of one parameter or several parameters can be considered. In the simplest case, the geometric width of the widest trajectory at the narrowest point can be examined here.

If there are several trajectories, the individual widths of the value ranges can, however, also be summed up, or phase space volumes can be determined for the families of trajectories and viewed or summed up individually.

[0124]

If the switchover condition is not met in step S15, a check is also made in step S16 to determine whether the driver is incapable of driving.

For this purpose, camera data or the driver's steering movements can be evaluated. The data obtained can be used to detect unconsciousness or tiredness of the driver. If the driver is not found to be unable to drive in step S16, the method is continued from step S1 1, as a result of which the driver continues to drive the vehicle.

[0125]

If the driver is found to be unable to drive, the driver assistance system switches to the fourth operating mode and, in step S 7, autonomous driving to a safe parking position is initiated.

In this step it is also possible for an unconscious or otherwise ill driver to be made, target driving maneuvers to be given to other vehicles in order to enable the motor vehicle to be parked safely, or the like. When a safe parking position is reached, the motor vehicle is parked in step S18. This ends the procedure in this case.

[0126]

If it is determined in step S 5 that the switchover criterion is met, the driver assistance system switches to the second operating mode and in step S19 it is determined whether at least one trajectory could be determined, i.e. whether the motor vehicle can be driven safely at all.

If this is the case, then in step S20 a warning to further motorists can be issued Evidence are output that the motor vehicle, since a switchover criterion has already been determined in step S15, is likely to be operated in a physical limit range. The output of a warning in step S20 can then be omitted if the switchover conditions in step S15 were met exclusively because the motor vehicle is being moved outside the comfort range of a driver, but a sufficiently large distance from the physical limit range is still maintained. In addition, a notification device can be activated in step S20 in order to notify a driver of the start of autonomous driving.

[0127]

If several drivable trajectories were determined in steps S13 and S14, the control trajectory can be selected from these trajectories in step S21.

If only one drivable trajectory was determined, this is the selected control trajectory. A large number of optimization criteria can be used to select the trajectory. In particular, a safety distance to obstacles and the edge of the road can be optimized. At the

same time, attempts can be made to minimize longitudinal and / or transverse accelerations. The optimization conditions can be used to aim at enabling the motor vehicle to travel as safely as possible, the trajectory being driven at the same time showing a minimal deviation from a predicted driver's will. r

[0128]

In step S22, driving takes place along the trajectory selected in step S21, for which purpose the driver assistance system autonomously carries out at least the control of the motor vehicle, but in particular the entire lateral guidance or the entire longitudinal and lateral guidance of the motor vehicle.

Here, the trajectory can be adapted if necessary, in particular on the basis of newly determined environment and ego data.

[0129]

In step S23 it is checked whether a downshift condition is fulfilled.

This takes place in an equivalent manner to checking the downshift conditions in step S5 in FIG. 7. If no downshift condition is determined, the autonomous driving is continued in step S22. When the downshift conditions are determined, the vehicle guidance is returned to the driver in step S24, whereby this can be configured in a variety of ways. In particular, a notification signal can be given to the driver that a return transfer should take place. A return transfer can only take place after a specified action by the driver.

[0130]

After the return transfer in step S24, the driver assistance system switches to the first operating mode, the method is continued in step S1 1 and the motor vehicle is again guided by the driver.

[0131]

If it is determined in step S19 that no drivable trajectory could be determined for the vehicle, a warning is output to the driver in step S25, since in this case it is assumed that an accident is unavoidable or that the motor vehicle with extended boundary conditions, must therefore be operated at least with a reduction in driving comfort.

In step S26, the boundary conditions for determining the trajectories are adapted.

If the trajectories were initially determined in steps S13 and S14 in such a way that the lane trajectories describe a comfort area of the driver, it is now possible to extend the boundary conditions to a physical limit area. It is also possible for the driving range to be expanded. In cases where there are no obstacles next to a road, areas next to the road can now be added to the driving area.

[0132]

After the adaptation of the boundary condition, an attempt is made in step S27 to determine an optimal trajectory with the adapted boundary conditions.

In step S28 it is checked whether at least one possible trajectory was determined in step S27. If this is not the case, it can be assumed that no trajectory can be determined with which damage to persons, the motor vehicle and / or third-party objects can be completely avoided. The driver assistance system therefore changes to a fourth operating mode and in step S29 an emergency trajectory is calculated with which damage is minimized as far as possible. The calculation of damage-minimizing trajectories in the event of unavoidable accidents is known in the prior art. This trajectory can be carried out in step S30 and typically ends in step S31 when the motor vehicle comes to a standstill. Since in this case it can be assumed that there is a damage situation, certain vehicle systems can also be switched off or emergency calls can be made in step S31.

[0133]

If it is determined in step S28 that a drivable trajectory exists with the adapted boundary conditions, preparatory steps can be carried out in step S32 in which, for example, vehicle systems such as chassis or differential lock are adapted accordingly.

The corresponding trajectory can then be carried out in step S33. Since the trajectory is typically carried out in the limit range, a check is carried out in step S34 to determine whether a problem, in particular damage to the motor vehicle or an unexpected vehicle movement, has occurred. In this case, the vehicle can be stopped in a targeted manner in step S35, as a result of which the method ends with the vehicle coming to a standstill in step S36. If it is determined in step S34 that the motor vehicle is being guided along the trajectory in a controlled manner, it can be checked in step S37 whether a downshift condition is present. If this is not the case, the execution of the trajectory is continued in step S33. The check of the return condition corresponds to step S23. If the return condition is met, a return transfer to the driver can take place in step S38 as well as in step S24, whereupon the driver assistance system switches to the first operating mode and the method is continued with normal driving in step S11.

Patent Translate
Powered by EPO and Google

Notice

This translation is machine-generated. It cannot be guaranteed that it is intelligible, accurate, complete, reliable or fit for specific purposes. Critical decisions, such as commercially relevant or financial decisions, should not be based on machine-translation output.

CLAIMS WO2015024616A1

1.

P A T E N T A S P R Ü C H E

1.

Motor vehicle comprising at least one driver assistance system (2) for predicting future driving situations of the motor vehicle (1) for a predetermined time interval by evaluating ego data relating to the motor vehicle (1) and the surrounding data relating to the motor vehicle, the motor vehicle (1) in a first operating mode of the driver assistance system (2) can be controlled by a driver,

characterized,

that the driver assistance system (2) is designed to temporarily switch to a second operating mode in which the driver assistance system (2) controls the motor vehicle (1) without the possibility of intervention by the driver, when a switchover condition, which depends at least on the future driving situations, is fulfilled, the driving operation being continued in the second operating mode, the driver assistance system (2) being designed to calculate a prognosis in the second operating mode as to whether the switchover condition is met at a waypoint ahead in the direction of travel and to calculate a target position (31, 41, 42) to determine for the autonomous driving operation at which the switchover condition is likely not to be met.

2.

Motor vehicle according to claim 1,

characterized,

that the driver assistance system (2) is designed to evaluate ego data, in particular route data of a navigation system (4), and environment data to determine a target route of the motor vehicle desired by the driver, the target position (31, 41, 42) being on the target route.

3.

Motor vehicle according to claim 1 or 2,

characterized,

that the driver assistance system (2) is designed to determine the target position (31, 41, 42) in such a way that at the target position (31, 41, 42) the predicted traffic situation and / or a route allows safe return of the vehicle guidance to the driver.

Motor vehicle according to one of the preceding claims,

characterized,

that the driver assistance system (2) is designed to switch from the second to the first operating mode when at least one downshift condition is present, wherein the or one of the downshift conditions is that the switchover condition is not met and / or that the traffic situation ensures that the vehicle control is safely returned to the driver allowed and / or that the target position (31, 41, 42) has been reached.

Motor vehicle according to one of the preceding claims,

characterized,

that the driver assistance system (2) is designed to determine a control trajectory between the current position of the motor vehicle (1) and the target position (31, 41, 42) and to control the motor vehicle (1) along the control trajectory in the second operating mode.

Motor vehicle according to one of the preceding claims,

characterized,

that the driver assistance system (2) in the second operating mode for autonomous control of the brake systems (10) and / or the engine (1 1) and / or the steering (8) and / or the preferably automatic transmission (12) of the motor vehicle without the possibility of intervention by the Driver is trained.

Motor vehicle according to one of the preceding claims,

characterized,

that the driver assistance system (2) is used to calculate a plurality of motor vehicles starting from the current position of the motor vehicle (1)

ren trajectories is formed with at least one boundary condition determined from ego data and / or environment data and that the switchover condition is formed for evaluating the drivable trajectories.

8. Motor vehicle according to claim 7,

characterized,

that the driver assistance system (2) is designed to determine at least one driving area that begins at the position of the motor vehicle (1) and can be driven into by the motor vehicle (1), the boundary condition or one of the boundary conditions being that the trajectories are completely within the driving area get lost.

9. Motor vehicle according to claim 8,

characterized,

that the driver assistance system (2) for calculating the drivable trajectories is designed as at least one parameterized group of trajectories from a plurality of drivable trajectories and / or as several individual drivable trajectories that are spaced apart by a predetermined or adjustable distance between their parameters, in particular the location coordinates is.

10. Motor vehicle according to one of Claims 7 to 9,

characterized,

that the driver assistance system (2) is designed to determine at least one speed profile for each of the drivable trajectories.

1 1. Motor vehicle according to one of Claims 7 to 10,

characterized,

that the driver assistance system is designed to determine a limit value for a vehicle parameter from the drivable trajectories and the switchover condition or one of the switchover conditions is above or below the limit value.

12. Motor vehicle according to one of claims 7 to 1 1, characterized in that

that the switchover condition or one of the switchover conditions is falling below a minimum value for the number of drivable trajectories or a width of a value range of at least one parameter which parameterizes a group of trajectories of drivable trajectories.

13. Motor vehicle according to one of Claims 7 to 12,

characterized,

that the driver assistance system (2) is designed to adapt at least one boundary condition in the event that no drivable trajectory can be determined and to recalculate drivable trajectories.

14. Motor vehicle according to one of Claims 7 to 13,

characterized,

that the driver assistance system (2) is designed to switch to a third operating mode in which an emergency trajectory is determined in the event that no drivable trajectory can be determined, in particular after adapting the boundary conditions.

15. Motor vehicle according to one of the preceding claims,

characterized,

that the driver assistance system (2) is designed to control a notification device (15) for giving an acoustic, haptic and / or visual notification when switching to the second operating mode and / or before switching to the first operating mode, as an indication of the driver takeover.

16. Motor vehicle according to one of the preceding claims,

characterized,

that it has a communication device (6) for wireless vehicle-to-vehicle communication and / or for wireless vehicle-to-infrastructure communication, the driver assistance system (2) for determining environmental data by activating the communication device (15) for communication with information sources and / or for communication with others Motor vehicles (27, 29, 37, 43, 44, 56, 57, 58, 59, 60) is designed for the transmission of warning notices, in particular when switching to the second operating mode.

17. Motor vehicle according to one of the preceding claims,

characterized,

that the driver assistance system (2) is in a fourth operating mode for autonomous control of the steering (8) and / or the brake systems (10) and / or the engine (1 1) and / or the, in particular, automatic transmission (12) of the motor vehicle (1) is designed without the possibility of intervention by the driver, and the motor vehicle (1) is brought into a safe parking position.

18. Motor vehicle according to claim 17,

characterized,

that it comprises a driver state detection means (17) for detecting a driver state and the driver assistance system (2) is designed to switch to the fourth operating mode when a driver state is determined which indicates the driver's inability to drive.

19. Motor vehicle according to one of claims 17 or 18,

characterized,

that the driver assistance system (2) when switching from the second operating mode to the first operating mode to wait for an input from a driver to take over the driver and if this input is not made within a predetermined time interval for

Switching is formed in the fourth operating mode.

Motor vehicle according to one of Claims 17 to 19,

characterized,

that the driver assistance system (2) is designed to switch to the fourth operating mode within a predetermined period of time when a predetermined minimum number and / or when a predetermined minimum frequency of switchovers is determined.

Motor vehicle according to one of Claims 17 to 20,

characterized,

that the motor vehicle (1) comprises a communication device (6) and the driver assistance system (2) in the fourth operating mode for determining a target driving maneuver for at least one further motor vehicle (27, 29, 37, 43, 44, 56, 57, 58, 59, 60)) and is designed to control the communication device (6) for transmitting the target driving maneuver to the motor vehicle (27, 29, 37, 43, 44, 56, 57, 58, 59, 60), with priority information being able to be transmitted in addition to the target driving maneuver.

Motor vehicle according to one of the preceding claims,

characterized,

that the switchover condition and / or the boundary condition for calculating the drivable trajectories and / or the determination of the control trajectory is dependent on a property of the driver that is predetermined or determined by the driver assistance system (2).

A method for controlling a motor vehicle, comprising at least one driver assistance system and at least one detection means, the motor vehicle being controllable by a driver in a first operating mode of the driver assistance system, comprising the steps of:

- Detection of ego data pertaining to the motor vehicle and surrounding data pertaining to the motor vehicle environment by the acquisition means, - Predicting future driving situations of the motor vehicle by evaluating the ego data and the environment data by the driver assistance system,

- Check whether a switching condition that is at least dependent on the future driving situations is met by the driver assistance system,

- Temporary switchover to the second operating mode of the driver assistance system if the switchover condition is met,

- Autonomous control of the motor vehicle without the possibility of intervention by the driver to continue driving by the driver assistance system in the second operating mode, the driver assistance system in the second operating mode calculating a prognosis as to whether the switchover condition is met at a waypoint ahead in the direction of travel, and a target position for the automatic driving is determined, at which the switchover condition is not expected to be met.

(12) NACH DEM VERTRAG ÜBER DIE INTERNATIONALE ZUSAMMENARBEIT AUF DEM GEBIET DES PATENTWESENS (PCT) VERÖFFENTLICHTE INTERNATIONALE ANMELDUNG

(19) Weltorganisation für geistiges Eigentum
Internationales Büro

(43) Internationales Veröffentlichungsdatum
26. Februar 2015 (26.02.2015)

WIPO | PCT

(10) Internationale Veröffentlichungsnummer
WO 2015/024616 A1

(51) Internationale Patentklassifikation:
B60K 28/06 (2006.01) *B60W 10/20* (2006.01)
B60W 10/04 (2006.01) *B60W 30/09* (2012.01)
B60W 10/10 (2012.01) *B60W 30/095* (2012.01)
B60W 10/18 (2012.01)

(21) Internationales Aktenzeichen: PCT/EP2014/001971

(22) Internationales Anmeldedatum:
19. Juli 2014 (19.07.2014)

(25) Einreichungssprache: Deutsch

(26) Veröffentlichungssprache: Deutsch

(30) Angaben zur Priorität:
10 2013 013 867.1
20. August 2013 (20.08.2013) DE

(71) Anmelder: **AUDI AG** [DE/DE]; 85045 Ingolstadt (DE).

(72) Erfinder: **DANZL, Martin**; Plättenweg 3, 83115 Neubeuern (DE). **WÜST, Sabine**; Michael-Ende-Str. 1, 85051 Ingolstadt (DE). **GOLLEWSKI, Thorsten**; Heinrich-Heine-Strasse 21, 85080 Gaimersheim (DE). **KIENZL, Georg**; Anemonenstr. 2a, 85055 Ingolstadt (DE). **HAGEMANN, Franz-Michael**; Fortstr. 14, 85120 Hepberg (DE). **SIEDERSBERGER, Karl-Heinz**; Wolfgang-Höfer-Str. 13, 85049 Ingolstadt (DE). **MIEHLING, Thomas**; Richard-Strauss-Str. 73 a, 85057 Ingolstadt (DE). **KUNSCH, Peter**; Zucheringer Weg 1, 85123 Karlskron (DE).

(81) Bestimmungsstaaten *(soweit nicht anders angegeben, für jede verfügbare nationale Schutzrechtsart)*: AE, AG, AL, AM, AO, AT, AU, AZ, BA, BB, BG, BH, BN, BR, BW, BY, BZ, CA, CH, CL, CN, CO, CR, CU, CZ, DK, DM, DO, DZ, EC, EE, EG, ES, FI, GB, GD, GE, GH, GM, GT, HN, HR, HU, ID, IL, IN, IR, IS, JP, KE, KG, KN, KP, KR, KZ, LA, LC, LK, LR, LS, LT, LU, LY, MA, MD, ME, MG, MK, MN, MW, MX, MY, MZ, NA, NG, NI, NO, NZ, OM, PA, PE, PG, PH, PL, PT, QA, RO, RS, RU, RW, SA, SC, SD, SE, SG, SK, SL, SM, ST, SV, SY, TH, TJ, TM, TN, TR, TT, TZ, UA, UG, US, UZ, VC, VN, ZA, ZM, ZW.

(84) Bestimmungsstaaten *(soweit nicht anders angegeben, für jede verfügbare regionale Schutzrechtsart)*: ARIPO (BW, GH, GM, KE, LR, LS, MW, MZ, NA, RW, SD, SL, SZ, TZ, UG, ZM, ZW), eurasisches (AM, AZ, BY, KG, KZ, RU, TJ, TM), europäisches (AL, AT, BE, BG, CH, CY, CZ, DE, DK, EE, ES, FI, FR, GB, GR, HR, HU, IE, IS, IT, LT, LU, LV, MC, MK, MT, NL, NO, PL, PT, RO, RS, SE, SI, SK, SM, TR), OAPI (BF, BJ, CF, CG, CI, CM, GA, GN, GQ, GW, KM, ML, MR, NE, SN, TD, TG).

[Fortsetzung auf der nächsten Seite]

(54) Title: DEVICE AND METHOD FOR CONTROLLING A MOTOR VEHICLE

(54) Bezeichnung : KRAFTFAHRZEUG UND VERFAHREN ZUR STEUERUNG EINES KRAFTFAHRZEUGS

FIG. 1

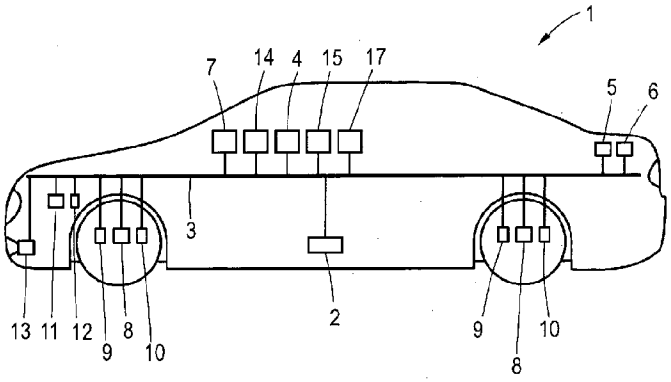

(57) Abstract: The invention relates to a motor vehicle, comprising at least one driver assistance system (2) for calculating future driving situations of the motor vehicle (1) in advance for a specified time interval by evaluating ego-data related to the motor vehicle (1) and environment data related to the motor vehicle environment, wherein the motor vehicle (1) can be controlled by a driver in a first operating mode of the driver assistance system (2), wherein the driver assistance system (2) is designed to temporarily switch to a second operating mode if a switching condition dependent at least on the future driving situations is satisfied, in which second operating mode the motor vehicle (1) is controlled autonomously by the driver assistance system (2) without the possibility of intervention by the driver, wherein in the second operating mode the driving operation is continued.

(57) Zusammenfassung:

[Fortsetzung auf der nächsten Seite]

WO 2015/024616 A1

Veröffentlicht:

— *mit internationalem Recherchenbericht (Artikel 21 Absatz 3)*

Kraftfahrzeug umfassend wenigstens ein Fahrerassistenzsystem (2) zur Vorausberechnung zukünftiger Fahrsituationen des Kraftfahrzeugs (1) für ein vorgegebenes Zeitintervall durch Auswertung von das Kraftfahrzeug (1) betreffenden Egodaten und das Kraftfahrzeugumfeld betreffenden Umfelddaten, wobei das Kraftfahrzeug (1) in einem ersten Betriebsmodus des Fahrerassisienzsystems (2) durch einen Fahrer steuerbar ist, wobei das Fahrerassistenzsystem (2) bei Erfüllung einer zumindest von den zukünftigen Fahrsituationen abhängenden Umschaltbedingung zum temporären Umschalten in einen zweiten Betriebsmodus, in dem die Steuerung des Kraftfahrzeugs (1) ohne Eingriffsmöglichkeit durch den Fahrer autonom durch das Fahrerassistenzsystem (2) erfolgt, ausgebildet ist, wobei im zweiten Betriebsmodus der Fahrbetrieb fortgesetzt wird.

Kraftfahrzeug und Verfahren zur Steuerung eines Kraftfahrzeugs

Die Erfindung betrifft ein Kraftfahrzeug, umfassend wenigstens ein Fahrerassistenzsystem zur Vorausberechnung zukünftiger Fahrsituationen des Kraftfahrzeugs für ein vorgegebenes Zeitintervall durch Auswertung von das Kraftfahrzeug betreffenden Egodaten und das Kraftfahrzeugumfeld betreffenden Umfelddaten, wobei das Kraftfahrzeug in einem ersten Betriebsmodus des Fahrerassistenzsystems durch einen Fahrer steuerbar ist.

Moderne Kraftfahrzeuge weisen eine Vielzahl von Fahrerassistenzsystemen auf, die der Steigerung der Fahrsicherheit und/oder des Fahrkomforts dienen. Insbesondere sind Fahrerassistenzsysteme bekannt, die abhängig von einem Ist-Zustand des Kraftfahrzeugs in die Steuerung der Kraftfahrzeugsysteme eingreifen, wie beispielsweise Antiblockiersysteme oder Spurstabilisierungssysteme. Daneben sind Komfortsysteme wie Spurhalteassistenzsysteme oder automatische Abstandsregelungen bekannt, die aus Egodaten und Umfelddaten eines Kraftfahrzeugs Voraussagen über künftige Fahrsituationen berechnen und das Kraftfahrzeug entsprechend dieser Voraussagen steuern. Es ist bekannt, dass diese teilautonomen Steuersysteme Steueraufgaben häufig mit einer geringeren Reaktionszeit und einer höheren Genauigkeit durchführen als ein menschlicher Fahrer. Damit kann ein autonomer Fahrbetrieb in vielen Fahrsituationen zu einem verbesserten Fahrverhalten des Fahrzeugs gegenüber einer Steuerung durch einen menschlichen Fahrer führen.

Um die Vorteile der schnelleren und genaueren Steuerung des Kraftfahrzeugs bei einem autonomen Fahrbetrieb zur Verbesserung der Sicherheit zu nutzen, ist es bekannt, Systeme einzusetzen, die drohende Kollisionen mit weiteren Kraftfahrzeugen erkennen und versuchen, diese Kollisionen zu vermeiden beziehungsweise die Auswirkungen der Kollisionen zu verringern.

Hierzu wird in den Fahrbetrieb eingegriffen, um das Kraftfahrzeug kontrolliert zum Stillstand zu bringen. Nachteilig ist hierbei, dass die erreichte Position des Kraftfahrzeugs häufig nicht ideal ist, wobei das zum Stillstand gebrachte Kraftfahrzeug ein Hindernis für weitere Verkehrsteilnehmer darstellt. Zudem ist es wünschenswert, autonome Fahreingriffe auch in anderen Fahrsituationen zu nutzen, um ein insgesamt verbessertes Fahrverhalten des Kraftfahrzeugs in kritischen Situationen zu erreichen, ohne die Handlungsfreiheit des Fahrers unnötig einzuschränken.

Der Erfindung liegt daher damit die Aufgabe zugrunde ein Kraftfahrzeug anzugeben, dessen Fahrverhalten in kritischen Fahrsituationen verbessert ist.

Zur Lösung dieser Aufgabe ist bei einem Kraftfahrzeug der eingangs genannten Art erfindungsgemäß vorgesehen, dass dessen Fahrassistenzsystem bei Erfüllung einer zumindest von den zukünftigen Fahrsituationen abhängenden Umschaltbedingung zum temporären Umschalten in einen zweiten Betriebsmodus, in dem die Steuerung des Kraftfahrzeugs ohne Eingriffsmöglichkeit durch den Fahrer autonom durch das Fahrerassistenzsystem erfolgt, ausgebildet ist, wobei im zweiten Betriebsmodus der Fahrbetrieb fortgesetzt wird.

Der Erfindung liegt die Idee zugrunde, einem Fahrer im „normalen" Fahrbetrieb die größtmögliche Handlungsfreiheit zu lassen, jedoch kritische Situationen im Fahrbetrieb prädiktiv zu erkennen und bei Vorliegen einer solchen Fahrsituation rechtzeitig in den Fahrbetrieb einzugreifen, mit dem Ziel, den Fahrbetrieb möglichst auch nach der kritischen Situation nahtlos fortsetzen zu können. Kommt es zu einem solchen Eingriff, so erfolgt zumindest die Steuerung des Kraftfahrzeugs vollständig autonom, das heißt ohne Eingriffsmöglichkeit durch den Fahrer. Insbesondere kann im zweiten Betriebsmodus auch eine vollständig autonome Längs- und Querführung des Kraftfahrzeugs erfolgen. Durch diese vollständig vom Fahrer unabhängige Steuerung zumindest der Steuerung des Kraftfahrzeugs können die Vorteile der autonomen Steuerung, insbesondere eine kürzere Reaktionszeit und eine exaktere Steuerung, genutzt werden. Im zweiten Betriebsmodus des Fahrer-

assistenzsystems erfolgt keine Bremsung des Kraftfahrzeugs bis zum Stillstand, vielmehr wird der Fahrbetrieb zu einem vorausliegenden Wegpunkt fortgesetzt. So kann durch das Fahrerassistenzsystem beispielsweise ein Punkt bestimmt werden, an dem voraussichtlich keine Umschaltbedingung mehr vorliegt, also ein Punkt, der jenseits eines kritischen Bereichs liegt, in dem die Umschaltbedingung erfüllt ist.

Die Umschaltbedingung kann so gewählt werden, dass sie erfüllt wird, wenn Fahrsituationen prognostiziert sind, die einen Fahrbetrieb im physikalischen Grenzbereich oder nahe am physikalischen Grenzbereich des Kraftfahrzeugs erfordern. Häufig ist es jedoch vorteilhaft, die Umschaltbedingung derart zu wählen, dass ein Umschalten in den zweiten Betriebsmodus bereits dann erfolgt, wenn davon auszugehen ist, dass ein Fahrer die prognostizierte Fahrsituation nicht zuverlässig beherrscht. Es ist insbesondere möglich, dass die Umschaltbedingung von einer Eigenschaft des Fahrers abhängig ist. Damit kann im erfindungsgemäßen Kraftfahrzeug das Fahrerassistenzsystem in Situationen eingreifen, in denen ein Fahrer das Kraftfahrzeug nicht mehr zuverlässig und komfortabel beherrschen kann, autonome Eingriffe jedoch die Fortsetzung des Fahrbetriebs noch erlauben.

Der zweite Betriebsmodus des Fahrassistenzsystems wird also insbesondere dann aktiviert, wenn das Kraftfahrzeug im (physikalischen oder bevorzugt fahrerindividuellen) Grenzbereich bewegt wird oder wenn plötzlich unerwartete Verkehrssituationen auftreten. Um solche Situationen zu erkennen, sammelt das Fahrerassistenzsystem Egodaten und Umfelddaten, die durch verschiedene Einrichtungen des Kraftfahrzeugs zur Verfügung gestellt werden können. Zur Prognose, ob eine Umschaltbedingung erfüllt ist, also ob insbesondere eine kritische Fahrsituation zu erwarten ist, kann eine Vielzahl von Informationen genutzt werden. Insbesondere können die Egodaten Informationen über Kraftfahrzeugkomponenten, insbesondere den Motor, die Bremsen und/oder die Reifen umfassen. So kann das Fahrverhalten des Kraftfahrzeugs besonders gut vorausgesagt werden, indem ein Reibungskoeffizient zwischen Reifen und Fahrbahn abgeschätzt werden kann. Hierzu können direkt Reibungskoeffizienten ermittelt oder vorgegeben werden, die

Reibungskoeffizienten können aber auch aus weiteren Informationen über den Reifen, wie beispielsweise Fahrleistung, Typ, Luftdruck ermittelt werden. Bezüglich des Motors und der Bremsen sind insbesondere maximale Brems- und Beschleunigungsmomente wesentlich zur Ermittlung und Bewertung potentieller Fahrsituationen. Auch weitere Fahrzeugparameter, wie beispielsweise ein maximaler Lenkwinkel können als Komponenteninformationen ausgewertet werden.

Daneben können zeitlich veränderliche Informationen über das Kraftfahrzeug wie die Eigengeschwindigkeit und/oder ein Roll-, Nick- oder Gierwinkel und/oder die Masse und/oder der Ort des Schwerpunktes und/oder der Lenkwinkel wenigstens eines Rades und/oder die Winkelgeschwindigkeit wenigstens eines Rades des Kraftfahrzeugs erfasst und zur Prognose der zukünftigen Fahrsituationen genutzt werden.

Neben den Informationen über das Kraftfahrzeug selbst sind zur Prognose zukünftiger Fahrsituationen auch Daten über das Umfeld des Kraftfahrzeugs notwendig. Diese können insbesondere durch Nutzung von Sensoren am Kraftfahrzeug und/oder aus im Navigationssystem gespeicherten Informationen gewonnen werden. Vorteilhaft werden Daten über die Fahrbahn erfasst, beispielsweise wenigstens ein Kurvenradius und/oder eine lokale Fahrbahnsteigung und/oder eine lokale Fahrbahnneigung und/oder ein lokaler Reibungskoeffizient und/oder eine Fahrbahnbreite. Daneben sollten Informationen über potentielle Hindernisse wie andere Kraftfahrzeuge, Fußgänger und feststehende Hindernisse gewonnen werden. Dabei können für bewegte Hindernisse wie Kraftfahrzeuge und Fußgänger insbesondere auch Daten ermittelt werden, die eine Bewegungsprognose für diese Hindernisse ermöglichen. Verfahren und Vorrichtungen zur Gewinnung von Umfelddaten sind im Stand der Technik bekannt und werden daher nicht weiter diskutiert.

Ein wesentliches Merkmal des erfindungsgemäßen Kraftfahrzeugs ist, dass das Fahrerassistenzsystem im zweiten Betriebsmodus die Steuerung des Kraftfahrzeugs nur temporär autonom durchführt. Daher ist das Fahrerassistenzsystem im zweiten Betriebsmodus dazu ausgebildet, bei Vorliegen einer

Rückschaltbedingung, die auch mehrere einzelne Bedingungen umfassen kann, vom zweiten Betriebsmodus in den ersten Betriebsmodus zurückzuschalten. Um sicherzustellen, dass der Fahrer aktiv die Kontrolle über das Kraftfahrzeug übernimmt, ist es vorteilhaft, bei Erfüllen der Rückschaltbedingung zunächst eine Übernahmeanforderung an den Fahrer auszugeben. So wird insbesondere ein optischer, akustischer oder haptischer Hinweis an den Fahrer gegeben, dass das Fahrerassistenzsystem bereit ist, die Führung des Kraftfahrzeugs wieder an den Fahrer abzugeben. Die tatsächliche Übernahme der Fahrzeugführung durch den Fahrer kann also erst erfolgen, nachdem der Fahrer die Rückübernahme der Fahrzeugführung durch eine Handlung bestätigt hat. Zudem soll bei der Rückübernahme ein Wiederankoppeln der Lenkradbewegung an die Lenkbewegung erfolgen. Daher muss bei der Übernahme der Lenkradwinkel gleich dem Lenkradwinkel sein, der dem momentanen Lenkwinkel entspricht.

Durch das temporäre Schalten in den zweiten Betriebsmodus des Fahrerassistenzsystems wird im erfindungsgemäßen Kraftfahrzeug erreicht, dass auch nach dem Eingreifen des Fahrerassistenzsystems eine normale Weiterfahrt möglich ist. Der Fahrbetrieb des Kraftfahrzeugs wird also durch das Eingreifen des Fahrerassistenzsystems nicht unterbrochen. Es ist damit eine kontinuierliche Fortbewegung des Kraftfahrzeugs während des Betriebs des Fahrerassistenzsystems im zweiten Betriebsmodus möglich. Da ein Stillstand des Kraftfahrzeugs vermieden wird, wird der Verkehrsfluss insgesamt weniger gestört als bei Sicherheitssystemen, die einen Stillstand des Kraftfahrzeugs herbeiführen. Zudem ist es durch die Fortführung des Fahrbetriebs möglich, die Belastung für den Fahrer zu verringern. Der Fahrer kann beim Betrieb des Fahrerassistenzsystems im zweiten Betriebsmodus zwar darauf hingewiesen werden, dass ein Eingriff des Fahrerassistenzsystems in den Fahrbetrieb erfolgt, insbesondere um den Fahrer darauf aufmerksam zu machen, dass er das Kraftfahrzeug nahe am physikalischen Grenzbereich oder voraussichtlich jenseits seines Komfortbereichs bewegt. Da plötzliche Bremsmanöver und der damit verbundene Schreck vermieden werden, wird die Fortsetzung der Fahrt jedoch für einen Großteil der Fahrer stark erleichtert.

Offensichtlich ist die im zweiten Betriebsmodus des Fahrerassistenzsystems erreichte Fortführung des Fahrbetriebs nur dann möglich, wenn das Fahrerassistenzsystem das Kraftfahrzeug sicher und zuverlässig durch die bevorstehende kritische Fahrsituation führen kann. In seltenen Fällen kann es jedoch möglich sein, dass eine sichere Fortsetzung des Fahrbetriebs nicht möglich ist. Für diese Situationen kann vorteilhaft ein weiterer Betriebsmodus des Fahrerassistenzsystems vorgesehen sein, um die Auswirkungen solcher Fahrsituationen zu minimieren.

Das Fahrerassistenzsystem kann dazu ausgebildet sein im zweiten Betriebsmodus eine Prognose, ob an einem in Fahrtrichtung voraus liegenden Wegpunkt die Umschaltbedingung erfüllt ist, zu berechnen und eine Zielposition für den autonomen Fahrbetrieb zu bestimmen, an der die Umschaltbedingung voraussichtlich nicht erfüllt ist. Wie erläutert, wird bei dem erfindungsgemäßen Verfahren der Fahrbetrieb aufrechterhalten, das heißt, das Fahrzeug wird weiterbewegt. Zur autonomen Bewegung des Kraftfahrzeugs ist es jedoch notwendig, eine Bewegungsrichtung für das Kraftfahrzeug festzulegen. Ziel des temporären Betriebs des Fahrerassistenzsystems im zweiten Betriebsmodus ist es, einen Bereich zu vermeiden oder sicher zu durchfahren, in dem die kritische Fahrsituation vorliegt, die zu einem Umschalten der Steuereinrichtung in den zweiten Betriebsmodus geführt hat. Wesentliches Merkmal der Zielposition ist, dass sie in einem Bereich liegt, in dem die Umschaltbedingung nicht erfüllt ist, wobei das Fahrerassistenzsystem keine kritische Fahrsituation oder eine Fahrsituation, die beispielsweise jenseits des Komfortbereichs eines Fahrers liegt, prognostiziert.

Beim Fortsetzen des Fahrbetriebs kann vorgesehen sein, dass das Fahrerassistenzsystem das Kraftfahrzeug derart führt, dass eine vom Fahrer gewünschte Route erkannt wird und der Fahrbetrieb entlang dieser Route fortgesetzt wird. Daher ist es möglich, dass das Fahrerassistenzsystem zur Auswertung von Egodaten, insbesondere von Routendaten eines Navigationssystems, und Umfelddaten zur Bestimmung einer vom Fahrer gewünschten Sollroute des Kraftfahrzeugs ausgebildet ist, wobei die Zielposition auf

der Sollroute liegt. Das Fahrerassistenzsystem wird typischerweise für relativ kurze Strecken; beispielsweise einige hundert Meter, im zweiten Betriebsmodus betrieben werden, da kritische Fahrsituationen nach solchen Strecken typischerweise überwunden sind. Daher reicht es zur Bestimmung der Route häufig, eine Route zu berechnen, die dem Straßenverlauf folgt. Es ist jedoch durchaus möglich, dass die Umschaltbedingung im Bereich einer Kreuzung oder Abzweigung erfüllt wird und das Fahrerassistenzsystem daher den Fahrerwillen erkennen muss, wenn einer entsprechenden Route gefolgt werden soll. Dies ist besonders einfach, wenn der Fahrer mit Hilfe eines Navigationssystems eine Route geplant hat, da dann schlicht dieser Route gefolgt werden kann. Es können jedoch auch eine Vielzahl anderer Fahrzeugsysteme ausgewertet werden. So kann beispielsweise ein gesetzter Blinker als Indiz gewertet werden, dass der Fahrer von der befahrenen Straße abbiegen möchte. Es können aber auch typische Verkehrsmuster ausgewertet werden. Weitere Verfahren zur Prognose einer voraussichtlich befahrenen Route sind für Navigationssysteme bekannt. Solche Verfahren können selbstverständlich auch im erfindungsgemäßen Kraftfahrzeug genutzt werden.

Es ist besonders vorteilhaft, wenn das Fahrerassistenzsystem derart zur Bestimmung der Zielposition ausgebildet ist, dass an der Zielposition die prognostizierte Verkehrssituation und/oder ein Streckenverlauf eine sichere Übergabe der Fahrzeugführung an den Fahrer erlaubt. Bei dem erfindungsgemäßen Kraftfahrzeug erfolgt zumindest die Steuerung des Kraftfahrzeugs vollständig autonom, das heißt, dass der Fahrer während der Zeit des Betriebs des Fahrerassistenzsystems im zweiten Betriebsmodus keinerlei Eingriffsmöglichkeit hat. Dies ist besonders einfach bei der Nutzung von Drive-by-Wire-Systemen möglich, bei denen die Lenkung der Räder mechanisch vollständig von der Bewegung des Lenkrads entkoppelt ist. Insbesondere bei solchen Systemen ist es vorteilhaft, wenn eine Rückübergabe der Kraftfahrzeugsteuerung an den Fahrer in einer Situation erfolgt, in der möglichst wenige Lenkbewegungen notwendig sind, da vor einem Wiederankoppeln des Lenkrads an die Lenkung der Räder eine Anpassung des Lenkwinkels an den Lenkradwinkel erfolgen muss, die vorteilhaft über längere Zeiträume erfolgt und/oder zumindest geringfügige Störungen der Fahrtrajektorie erzeugt.

Dies kann weitgehend kompensiert werden, wenn die Rückübergabe in einem geeigneten Bereich erfolgt, wobei es insbesondere vorteilhaft ist, wenn die Strecke relativ gerade ist und ein vorgegebener Mindestabstand zu weiteren Verkehrsteilnehmern eingehalten wird.

Das Fahrerassistenzsystem kann insbesondere zum Umschalten vom zweiten in den ersten Betriebsmodus bei Vorliegen wenigstens einer Rückschaltbedingung ausgebildet sein, wobei die oder eine der Rückschaltbedingungen ist, dass die Umschaltbedingung nicht erfüllt ist und/oder dass die Verkehrssituation eine sichere Rückgabe der Fahrzeugkontrolle an den Fahrer erlaubt und/oder dass die Zielposition erreicht ist. Das Nichterfülltsein der Umschaltbedingung bedeutet, dass keine kritische Fahrsituation, also eine Fahrsituation, in der sich das Kraftfahrzeug im physikalischen Grenzbereich oder jenseits des Komfortbereichs eines Fahrers bewegt, zu erwarten ist. Dann ist es nicht mehr notwendig, dass das Fahrerassistenzsystem im zweiten Betriebsmodus verbleibt. Es ist jedoch dennoch vorteilhaft mit der Rückübergabe der Fahrzeugführung zu warten, bis diese in einer entsprechenden Verkehrssituation problemlos möglich ist. Wie erläutert kann bereits beim Wechseln in den zweiten Betriebsmodus oder bei laufendem Betrieb im zweiten Betriebsmodus eine Zielposition bestimmt werden, die insbesondere die beiden vorgenannten Bedingungen erfüllen kann. Damit ist für die Zielposition zumindest prognostiziert, dass die weiteren genannten Bedingungen zum Zurückschalten in den ersten Betriebsmodus erfüllt sind.

Beim autonomen Fahren im zweiten Betriebsmodus ist es möglich, das Kraftfahrzeug auf einer zumindest abschnittsweise vorberechneten Trajektorie zu führen. Es ist daher vorteilhaft, wenn das Fahrerassistenzsystem zur Bestimmung einer Steuertrajektorie zwischen der momentanen Position des Kraftfahrzeugs und der Zielposition und zur Steuerung des Kraftfahrzeugs entlang der Steuertrajektorie im zweiten Betriebsmodus ausgebildet ist. Zur Bestimmung von Trajektorien zum autonomen Fahren sind eine Vielzahl von Algorithmen bekannt. Besonders vorteilhaft können sogenannte „best first"-Algorithmen genutzt werden. Bei dieser Art von Suchalgorithmus werden zunächst Trajektorien berechnet, die voraussichtlich auf besonders kurzem

Weg oder besonders schnell zum Ziel führen. Beispielsweise kann ein a*-Algorithmus genutzt werden.

Es ist jedoch auch möglich, dass bereits im Rahmen der Vorausberechnung von zukünftigen Fahrsituation Trajektorien berechnet wurden. Wie eingangs erläutert, findet ein Wechsel in den zweiten Betriebsmodus vorzugsweise nur dann statt, wenn zumindest eine Möglichkeit existiert, die kritische Situation zu durchfahren. Es liegt also zumindest eine bekannte Trajektorie vor, die sicher durch das Kraftfahrzeug befahrbar ist. Damit ist es, wenn die zukünftigen Fahrsituationen unter Zuhilfenahme von Trajektorien berechnet wurden, möglich, die entsprechenden Trajektorien im Anschluss direkt zur Steuerung des Kraftfahrzeugs, also als Steuertrajektorie, zu nutzen.

Wird eine Steuertrajektorie neu berechnet oder sind mehrere Trajektorien zum Durchfahren der kritischen Situation bekannt, so kann eine optimale Steuertrajektorie bestimmt beziehungsweise gewählt werden. Die Optimierung der Steuertrajektorie kann insbesondere bezüglich sicherheitsrelevanter Parameter, wie beispielsweise dem Sicherheitsabstand zu Hindernissen oder dem Abstand der Beschleunigungskräfte, die zum Fahren der Trajektorie notwendig sind, zu einem Maximalwert für die Beschleunigungskräfte, erfolgen. In vielen Fällen ist der Raum der nutzbaren Trajektorien für das Kraftfahrzeug hinreichend groß, so dass auch weitere Parameter, insbesondere zur Minimierung der Belastung eines Fahrers, bei der Optimierung berücksichtigt werden können. Es kann insbesondere versucht werden, die Beschleunigung in Längs- und/oder Querrichtung zu minimieren. Zudem kann versucht werden, eine Trajektorie zu ermitteln, die eine möglichst zeitnahe Rückübergabe der Fahrzeugführung an den Fahrer ermöglicht. Häufig ist es bereits durch eine Steuertrajektorie, die minimal von einem prognostizierten Fahrerwillen abweicht, möglich, eine kritische Fahrsituation sicher zu durchfahren. Selbstverständlich werden bei der Berechnung der Steuertrajektorie die physikalischen Grenzen des Kraftfahrzeugs berücksichtigt. Es ist jedoch auch möglich, die Komfortgrenzen des Fahrers soweit möglich zu berücksichtigen.

Durch die erläuterte autonome Steuerung des Kraftfahrzeugs kann bereits eine Vielzahl von kritischen Fahrsituationen entschärft werden. Dennoch ist es vorteilhaft, weitere Fahrzeugsysteme im zweiten Betriebsmodus autonom durch das Fahrerassistenzsystem zu steuern. So kann das Fahrerassistenzsystem im zweiten Betriebsmodus zur autonomen Steuerung der Bremssysteme und/oder des Motors und/oder der Lenkung und/oder des vorzugsweise automatischen Getriebes des Kraftfahrzeugs ohne Eingriffsmöglichkeit durch den Fahrer ausgebildet sein. Insbesondere ist auch eine Ansteuerung einzelner Räder, insbesondere von Einzelradbremsen, möglich. Es ist auch möglich, dass die gesamte Querführung oder die gesamte Längs- und Querführung des Kraftfahrzeugs durch das Fahrerassistenzsystem erfolgt. In diesem Fall kann das Kraftfahrzeug entlang beliebiger, physikalisch durch das Kraftfahrzeug fahrbarer, vorberechneter Trajektorien bewegt werden. Dies ist vorteilhaft, da bei ausschließlich autonomer Steuerung des Kraftfahrzeugs unerwartete Eingriffe des Fahrers in andere Steuersysteme die Durchführung der berechneten Trajektorien stören können.

Das Fahrerassistenzsystem kann insbesondere zur Berechnung von mehreren von der momentanen Position des Kraftfahrzeugs ausgehenden fahrbaren Trajektorien mit wenigstens einer aus Egodaten und/oder Umfelddaten bestimmten Randbedingung ausgebildet sein und die Umschaltbedingung kann zum Auswerten der fahrbaren Trajektorien ausgebildet sein. Die Prognose zukünftiger Fahrsituationen und das Erkennen der Umschaltbedingungen, insbesondere der Tatsache, dass eine Fahrsituation ein Fahren im physikalischen Grenzbereich oder jenseits des Komfortbereichs des Fahrers erfordert, kann also durch Berechnung einer Vielzahl möglicher Trajektorien und eine Auswertung der Trajektorien erfolgen. Als fahrbare Trajektorien werden insbesondere solche Trajektorien betrachtet, die ohne Beeinträchtigung von Personen, des Kraftfahrzeugs und Drittgegenständen auszuführen sind. Insbesondere können bei der Bestimmung der fahrbaren Trajektorien auch Parameter des Kraftfahrzeugs selbst, wie ein maximaler Lenkwinkel, maximal mögliche Beschleunigungen, die Reibungskraft zwischen Reifen und Straße oder Ähnliches berücksichtigt werden. Die Fahrbarkeit der Tra-

jektorien kann durch die Anwendung von Randbedingungen sichergestellt werden.

Eine besonders einfache Berechnung der Trajektorien ist möglich, wenn die Trajektorien zunächst ausschließlich als Trajektorien im Ortsraum bestimmt werden. Es ist jedoch auch möglich, Trajektorien direkt derart zu berechnen, dass sie bestimmten Orten feste Zeiten zuordnen oder dass an jedem Ort zusätzlich eine Geschwindigkeit berechnet wird. Des Weiteren können Trajektorien weitere Parameter, wie beispielsweise eine Ausrichtung eines Kraftfahrzeugs, insbesondere einen Schwimmwinkel, also den Winkel zwischen der Ausrichtung des Kraftfahrzeugs und der Bewegungsrichtung, umfassen. Es ist auch möglich, die Trajektorien durch eine vorwärts oder rückwärts rechnende Simulation der Fahrzeugbewegung zu berechnen, die eine Vielzahl von Parametern umfasst, wie beispielsweise die bereits genannten Ego- und Umfelddaten.

Beispielsweise können alle fahrbaren Trajektorien berechnet werden, die in einen vorgegebenen Straßenbereich führen. Die Endpunkte der Trajektorien können derart bestimmt werden, dass sie eine vorgegebene Entfernung zum Kraftfahrzeug aufweisen, oder die Trajektorien können derart berechnet werden, dass sie eine gewisse zeitliche Länge aufweisen.

Bei der Berechnung der Trajektorien können neben Randbedingungen, die die physikalische Fahrbarkeit der Trajektorien sicherstellen, auch Randbedingungen berücksichtigt werden, die beispielsweise minimale Sicherheitsabstände zu Objekten, Komfortparameter, wie maximale Längs- oder Querbeschleunigungen, Verkehrsregeln oder Ähnliches betreffen. Werden bewegte Objekte im Fahrzeugumfeld erkannt, so können die Randbedingungen insbesondere auch Bewegungsvoraussagen für diese Objekte treffen. Insbesondere bei der Berücksichtigung von bewegten Objekten ist es vorteilhaft, die Trajektorien nicht im reinen Ortsraum, sondern in einem Raum, der eine zusätzliche Zeitkoordinate aufweist, zu berechnen. Bewegte Objekte können in diesem Fall als ein nicht nutzbares Volumen in diesem Raum beschrieben werden.

Häufig ist es möglich, den Raum der berechneten Trajektorien einzuschränken, indem die vom Fahrer gewünschte Sollroute berücksichtigt wird. Eine solche Sollroute kann beispielsweise ermittelt werden, indem Routendaten eines Navigationssystems, Egodaten und/oder Umfelddaten ausgewertet werden. Führt z. B. eine geplante Route eines Navigationssystems an einer Kreuzung nach rechts, so kann die Berechnung von Trajektorien, die entlang des weiteren Straßenverlaufs beziehungsweise nach links führen, zunächst zurückgestellt werden. Die zeitliche oder räumliche Länge der Trajektorien kann abhängig von verschiedenen Parametern, wie beispielsweise der gefahrenen Geschwindigkeit, der Verkehrsdichte oder dem Straßenverlauf, angepasst werden.

Es ist möglich, dass das Fahrerassistenzsystem zur Bestimmung wenigstens eines an der Position des Kraftfahrzeugs beginnenden Fahrbereichs, der durch das Kraftfahrzeug befahrbar ist, ausgebildet ist, wobei die Randbedingung oder eine der Randbedingungen ist, dass die Trajektorien vollständig innerhalb des Fahrbereichs verlaufen. Dabei ist es möglich, dass der Fahrbereich derart bestimmt wird, dass durch Hindernisse blockierte Bereiche aus dem Fahrbereich ausgeschlossen werden. Es ist jedoch auch möglich, durch Hindernisse blockierte Bereiche zunächst im Fahrbereich zu belassen und im Fahrbereich vorhandene Hindernisse direkt bei der Trajektorienberechnung zu berücksichtigen, so dass die Hindernisse durch die berechneten Trajektorien vermieden werden. Damit ist ein Bereich bekannt, durch den die Trajektorien verlaufen können. Typischerweise wird ein solcher Bereich als der Bereich der Fahrbahn, der keine Hindernisse umfasst, bestimmt, es ist jedoch auch möglich, gewisse Bereiche der Fahrbahn auszuschließen oder zusätzliche Bereiche zum Fahrbereich hinzuzunehmen. Nicht jeder Teil des Fahrbereichs kann notwendigerweise durch eine fahrbare Trajektorie erreicht werden, da die fahrbaren Trajektorien beispielsweise durch den möglichen Lenkwinkel des Kraftfahrzeugs begrenzt sind.

Es ist möglich, dass bereits bei der Festlegung des Fahrbereichs Sicherheitsabstände zu Hindernissen berücksichtigt werden. Alternativ kann die

Berücksichtigung von Sicherheitsabständen jedoch auch nachträglich erfolgen, indem alle Trajektorien vom Rand des Fahrbereichs beabstandet werden. Es ist zu beachten, dass der Fahrbereich nur dann zeitunabhängig ist, wenn keine bewegten Hindernisse im Fahrzeugumfeld vorhanden sind. Bewegte Hindernisse können berücksichtigt werden, indem ein zeitabhängiger Fahrbereich bestimmt wird. Zur Vereinfachung der Berechnung ist es jedoch auch möglich, alle Bereiche, die innerhalb eines vorgegebenen Zeitintervalls von bewegten Hindernissen überstrichen werden, zunächst aus dem Fahrbereich auszunehmen. Dadurch ist auch bei Vorhandensein von bewegten Objekten eine besonders einfache Berechnung von Trajektorien möglich und die Nutzung eines rechenaufwendigen zeitabhängigen Fahrbereichs muss erst dann erfolgen, wenn bei Nutzung des zuvor bestimmten Fahrbereichs keine oder sehr wenige Trajektorien gefunden wurden.

Die die Trajektorien beschreibenden Parameter, insbesondere die Ortskoordinaten, sind typischerweise kontinuierliche Variablen. Dadurch müssten selbst bei einer technisch bedingten endlichen Auflösung sehr viele einzelne Trajektorien berechnet werden, um die möglichen Trajektorien zu finden. Zur Reduzierung der Trajektorienzahl sind insbesondere zwei Ansätze denkbar. So ist es möglich, dass das Fahrerassistenzsystem zur Berechnung der fahrbaren Trajektorien als wenigstens eine parametrisierte Trajektorienschar aus einer Vielzahl von fahrbaren Trajektorien und/oder als mehrere einzelne fahrbare Trajektorien, die durch einen vorgegebenen oder anpassbaren Abstand ihrer Parameter, insbesondere der Ortskoordinaten, beabstandet sind, ausgebildet ist. Im ersten Fall werden die Trajektorien also zumindest teilweise als kontinuierliche Trajektorienschar angegeben. So können beispielsweise bei einer Nutzung reiner Ortstrajektorien zwei Begrenzungstrajektorien bestimmt werden, aus denen in Abhängigkeit wenigstens eines Parameters die weiteren dazwischenliegenden Trajektorien berechnet werden. Eine entsprechende Parametrisierung ist selbstverständlich für mehrere Parameter gleichzeitig möglich.

Insbesondere bei komplexeren Berechnungsverfahren für die Trajektorien, also beispielsweise einer Berechnung der Trajektorien anhand eines simu-

lierten physikalischen Modells, können solche kontinuierlichen Trajektorienscharen jedoch sehr aufwendig zu berechnen sein. Insbesondere in diesen Fällen ist es vorteilhaft, diskrete Trajektorien zu bestimmen, wobei die einzelnen Trajektorien mit einem vorgebbaren Abstand beabstandet sind. Damit wird also eine Diskretisierung der einzelnen Parameter mit einer vorgebbaren Auflösung erreicht. In Einzelfällen kann es aber auch vorteilhaft sein, Trajektorien, die mehrere Parameter umfassen, in einigen der Parameter als kontinuierliche Schar und in den anderen der Parameter diskretisiert darzustellen.

Zur Berechnung der Trajektorien ist eine Vielzahl von Ansätzen möglich. Wie erwähnt ist es besonders einfach, zunächst ausschließlich Raumkurven als Trajektorien anzugeben. In diesem Fall können zunächst Fahrschläuche ermittelt werden, innerhalb derer sich kein Hindernis befindet. Ein Fahrschlauch bezeichnet in diesem Fall einen Bereich, der vollständig durch fahrbare Trajektorien bedeckt werden kann. Ein solcher Fahrschlauch und die zwischen den Grenzen des Fahrschlauchs liegenden Trajektorien können dadurch beschrieben werden, dass zunächst zwei geometrische Begrenzungstrajektorien für den Fahrschlauch bestimmt werden, die den Fahrschlauch begrenzen. Solche Begrenzungstrajektorien weisen typischerweise einen vorgegebenen Abstand vom Rande eines Fahrbereichs auf. Das heißt, sie laufen mit einem vorgegebenen Sicherheitsabstand an Hindernissen in der Fahrzeugumgebung vorbei. Ist zwischen zwei dieser Begrenzungstrajektorien kein Hindernis, so wird typischerweise ein Fahrschlauch durch diese beiden Begrenzungstrajektorien gebildet, falls alle Trajektorien zwischen ihnen befahrbar sind. Ergänzend kann innerhalb des Fahrschlauchs noch eine Idealtrajektorie bestimmt werden, die beispielsweise die kürzeste Strecke bis zu einem vorgegebenen Punkt oder Streckenabschnitt beschreibt, die mit der höchsten Geschwindigkeit befahrbar ist oder Ähnliches.

Die weiteren Trajektorien des Fahrschlauchs können dann berechnet werden, indem zwischen den beiden Begrenzungstrajektorien beziehungsweise zwischen den Begrenzungstrajektorien und der Idealtrajektorie interpoliert wird. Alternativ ist es auch möglich, die Idealtrajektorie zu variieren, bei-

spielsweise indem zur Idealtrajektorie benachbarte Trajektorien berechnet werden, die nur in eine Richtung von der Idealtrajektorie abweichen und vorzugsweise genauso viele oder weniger Wendepunkte aufweisen. Wird das erläuterte Verfahren für jeden Teil des Fahrbereichs durchgeführt, durch den ein Fahrschlauch führbar ist, so können zumindest diejenigen Trajektorien im Fahrbereich ermittelt werden, die von Fahrzeugen typischerweise befahren werden und die mit den höchsten Geschwindigkeiten fahrbar sind beziehungsweise bei vorgegebener Geschwindigkeit zu den geringsten Kräften in Querrichtung zum Kraftfahrzeug führen.

In diesem Zusammenhang ist wesentlich, dass es unnötig ist, jede fahrbare Trajektorie zu bestimmen. Die Berechnung der fahrbaren Trajektorie dient zunächst nur dazu zu ermitteln, ob voraussichtlich eine kritische Fahrsituation vorliegt. Kritische Fahrsituationen zeichnen sich jedoch dadurch aus, dass die Parameter, die eine Weiterfahrt des Kraftfahrzeugs ermöglichen, relativ stark eingegrenzt sind. Dies bedeutet jedoch, dass in den kritischen Fahrsituationen, die erkannt werden sollen, beispielsweise Trajektorien mit einer Vielzahl von notwendigen Wendepunkten ohnehin nicht fahrbar sind. Es ist also ausreichend, wenn, wie beschreiben, nur einfache Trajektorien mit wenigen Wendepunkten berechnet werden.

Das Fahrerassistenzsystem kann insbesondere zur Bestimmung wenigstens eines Geschwindigkeitsprofils für jede der fahrbaren Trajektorien ausgebildet sein. Ein Geschwindigkeitsprofil kann im einfachsten Fall ausgehend von einer rein geometrischen Trajektorie bestimmt werden, indem die auftretenden Zentrifugalkräfte der Trajektorie, die sich aus der Masse des Kraftfahrzeugs, der Geschwindigkeit des Kraftfahrzeugs an dem Punkt und der lokalen Krümmung, das heißt dem Kurvenradius, ergeben, mit einem vorgegebenen oder lokal bestimmten Grenzwert verglichen werden. Der Grenzwert für die Zentrifugalkraft entspricht der Reibungskraft zwischen dem Kraftfahrzeug und der Straße.

Es ist dabei möglich, dass ein solcher Grenzwert für jeden der Reifen des Kraftfahrzeugs getrennt bestimmt wird und mit Zentrifugalkräften, die an die-

sem Rad wirken, verglichen wird. Dies ist insbesondere vorteilhaft, da abhängig von Roll- und Nickwinkel des Kraftfahrzeugs unterschiedliche Normalkräfte auf die einzelnen Reifen wirken können, wodurch die Reibkraft selbst bei gleichem Reibungskoeffizienten unterschiedlich ist. Der Reibungskoeffizient zwischen Reifen und Straße kann fest vorgegeben sein, es ist jedoch auch möglich, ihn abhängig von beispielsweise der Reifenart, der Laufleistung des Reifens, den lokalen Eigenschaften der Straße, die beispielsweise durch eine Kamera erfasst wurden oder Witterungsbedingungen anzupassen.

Aus der global oder lokal bestimmten maximalen Reibkraft kann damit, unter Umständen unter Berücksichtigung eines Sicherheitsintervalls für die Reibkraft, eine maximal fahrbare Geschwindigkeit für jeden Punkt der Trajektorie festgelegt werden. Werden zusätzlich die maximalen Beschleunigungs- und Verzögerungswerte des Kraftfahrzeugs berücksichtigt, kann ein Geschwindigkeitsprofil der maximal möglichen Geschwindigkeiten für jeden Punkt der Trajektorie bestimmt werden.

Werden bewegte Hindernisse nicht derart berücksichtigt, dass von ihnen im betrachteten Zeitintervall überstrichene Bereiche vollständig aus dem Fahrbereich ausgenommen werden, so müssen zur Trajektorienberechnung ohnehin Geschwindigkeitsgrenzwerte berücksichtigt werden. In diesem Fall ist es vorteilhaft, zumindest zwei Geschwindigkeitsprofile für eine Trajektorie, nämlich eines für die Maximalgeschwindigkeiten und eines für die Minimalgeschwindigkeiten am jeweiligen Ort der Trajektorie zu bestimmen.

Als Umschaltbedingung zum Umschalten in den zweiten Betriebsmodus des Fahrerassistenzsystems können insbesondere Bedingungen genutzt werden, die direkt auf der Menge der fahrbaren Trajektorien operieren, oder solche, die Bedingungen für weitere Fahrzeugparameter aus den fahrbaren Trajektorien ableiten. So kann das Fahrerassistenzsystem zur Bestimmung eines Grenzwertes für einen Fahrzeugparameter aus den fahrbaren Trajektorien ausgebildet sein und die Umschaltbedingung oder eine der Umschaltbedingungen kann das Über- oder Unterschreiten des Grenzwertes sein. Der

Fahrzeugparameter kann insbesondere die momentane Ist-Geschwindigkeit des Kraftfahrzeugs sein. Das Vorgehen zum Erhalt eines solchen Grenzwerts soll beispielhaft für die Fahrzeuggeschwindigkeit erläutert werden. Es ist wie erläutert vorteilhaft, wenn für jede der Trajektorien zumindest ein Geschwindigkeitsprofil bestimmt wurde. Insbesondere kann ein Profil bestimmt werden, das die maximalen Geschwindigkeiten für jeden Punkt angibt, mit denen die Trajektorie mit den maximalen Beschleunigungs- beziehungsweise Verzögerungswerten des Kraftfahrzeugs befahrbar ist. Durch diese Berechnung lässt sich für jede der Trajektorien eine maximale Geschwindigkeit des Kraftfahrzeugs am momentanen Aufenthaltsort des Kraftfahrzeugs bestimmen, mit der diese Trajektorie fahrbar ist.

Überschreitet die Geschwindigkeit des Kraftfahrzeugs zu irgendeinem Zeitpunkt die höchste der Geschwindigkeiten der Trajektorien an der Fahrzeugposition, so ist keine dieser Trajektorien fahrbar. Wesentliches Kriterium für eine kritische Fahrsituation ist damit, wie nah die aktuelle Fahrzeuggeschwindigkeit an der schnellsten Geschwindigkeit der Trajektorien für die Fahrzeugposition ist. Somit kann als Grenzwert für die Fahrzeuggeschwindigkeit eine Geschwindigkeit gewählt werden, die 90 % der höchsten Geschwindigkeit der Trajektorien an der Fahrzeugposition ist. Es kann auch eine Geschwindigkeit gewählt werden, bei der eine Mindestzahl von Trajektorien oder ein Fahrschlauch mit einer gewissen Mindestbreite mit einer Geschwindigkeit, die dem Grenzwert entspricht, befahrbar ist.

Soll der Grenzwert fahrerabhängig variiert werden, beispielsweise um bereits bei einem Verlassen eines Komfortbereichs des Fahrers in den zweiten Betriebsmodus zu schalten, so kann dies entweder dadurch erfolgen, dass die Berechnung des Grenzwerts aus den Trajektorien entsprechend angepasst wird, oder dadurch, dass bereits bei der Berechnung der möglichen Trajektorien engere Grenzwerte vorgegeben werden, wodurch beispielsweise die maximal erlaubten Querbeschleunigungen, die beim Befahren der berechneten Trajektorien auftreten, weiter reduziert werden.

Das oben beschriebene Vorgehen erlaubt eine besonders einfache Bestimmung, ob die Umschaltbedingung vorliegt. Beim beschriebenen Vorgehen wird jedoch nur ein einzelnes Geschwindigkeitsprofil berücksichtigt. Insbesondere in Verkehrssituationen, in den sich mehrere bewegte Hindernisse im Umfeld des Kraftfahrzeugs befinden, oder beim Betrieb des Kraftfahrzeugs in einem Grenzbereich, bei dem unter Umständen starke geschwindigkeitsabhängige seitliche Verschiebungen des Kraftfahrzeugs, auftreten können, kann eine getrennte Bestimmung der geometrischen Form der Trajektorie und des zugehörigen Geschwindigkeitsprofils nicht mehr möglich sein. Insbesondere in diesem Fall kann es vorteilhaft sein, statt eines Grenzwerts für eine Ist-Größe des Kraftfahrzeugs eine Umschaltbedingung zu nutzen, die direkt die fahrbaren Trajektorien auswertet.

So kann die Umschaltbedingung oder eine der Umschaltbedingungen ein Unterschreiten eines Minimalwerts für die Anzahl der fahrbaren Trajektorien oder einer Breite eines Wertebereichs wenigstens eines Parameters, der eine Trajektorienschar der fahrbaren Trajektorien parametrisiert, sein. Die Nutzung dieser Umschaltbedingung beruht auf der Idee, dass bei einem Fahren weit weg von einem physikalischen Grenzbereich, beziehungsweise weit innerhalb eines Komfortbereichs, der die möglichen Trajektorien durch zusätzliche Randbedingungen einschränkt, stets eine sehr große Zahl von Trajektorien möglich ist, da Trajektorien stets variiert werden können und weiterhin alle Randbedingungen erfüllen. Der physikalische Grenzbereich beziehungsweise die Grenzen eines Komfortbereichs sind aber gerade dadurch definiert, dass bei einem Verlassen des physikalisch möglichen Bereichs beziehungsweise des Komfortbereichs die physikalischen- beziehungsweise Komfortrandbedingungen durch keine Trajektorie mehr erfüllt sind, wodurch keine fahrbare Trajektorie berechnet werden kann. Der jeweilige Grenzbereich, in dem ein Umschalten in den zweiten Betriebsmodus erfolgen soll, ist also dadurch gekennzeichnet, dass die Zahl der fahrbaren Trajektorien stark abnimmt. Sind die Trajektorien wie vorbeschrieben als beabstandete diskrete Trajektorien berechnet, so kann ein solches Abnehmen der Trajektorienzahl schlicht durch Vergleich der Trajektorienzahl mit einem Minimalwert festgestellt werden. Sobald dieser Minimalwert unterschritten wird, gilt die Um-

schaltbedingung als erfüllt und das Fahrerassistenzsystem wechselt in den zweiten Betriebsmodus. Dabei ist es möglich, dass Trajektorien, die in zumindest einem Parameter durchgehend einen Mindestabstand unterschreiten, nur als eine einzelne Trajektorie gezählt werden.

Sind die fahrbaren Trajektorien jedoch als parametrisierte Trajektorienschar dargestellt, so entspricht ein Abnehmen der Trajektorienzahl einer Einschränkung des Wertebereichs für zumindest Teile der Parameter der Trajektorienschar. Die Umschaltbedingung soll in diesem Fall also abhängig von der Breite des Wertebereichs wenigstens eines Parameters wenigstens einer der Trajektorienscharen sein. Hierfür ist eine Vielzahl von Möglichkeiten denkbar. So kann für jede Trajektorienschar ein Phasenraumvolumen bestimmt werden, in dem die Breiten der Wertebereiche für die verschiedenen Parameter jeder der Trajektorienscharen multipliziert werden. Es ist aber auch möglich nur einige der Parameter oder einen einzelnen Parameter, insbesondere eine Breite im Ortsraum, auszuwerten.

Als Umschaltbedingung kann also das Unterschreiten eines Minimalwertes durch die Summe der Phasenraumvolumina oder des Produkts der ausgewählten Parameter der einzelnen Trajektorien genutzt werden. Es ist aber auch möglich, nur einige der Trajektorienscharen zu berücksichtigen, beispielsweise nur solche, die entlang einer Sollroute verlaufen. Insbesondere kann auch nur die Trajektorienschar berücksichtigt werden, deren Phasenraumvolumen am größten ist, beziehungsweise bei der das Produkt mehrerer gewählter Parameter oder ein einzelner Parameter am größten ist.

Es ist selbstverständlich möglich, vor Anwenden der Umschaltbedingung einige der Trajektorien zu verwerfen. So ist es möglich, dass bei der Berechnung der Trajektorien nur einige der Randbedingungen berücksichtigt werden und anschließend vor Auswertung der Umschaltbedingung jene Trajektorien verworfen beziehungsweise nicht berücksichtigt werden, die die weiteren Randbedingungen nicht erfüllen. Ergänzend oder alternativ können auch verschiedene Randbedingungen zur Berechnung der fahrbaren Trajektorien und zur Berücksichtigung bei der Auswertung der Umschaltbedingung ge-

nutzt werden. So ist es beispielsweise möglich, dass zur Berechnung der fahrbaren Trajektorien zunächst Grenzwerte genutzt werden, die einen physikalischen Grenzbereich beschreiben, vor der Auswertung der Umschaltbedingung jedoch jene Trajektorien verworfen werden, die jenseits eines Komfortbereichs des Fahrers liegen. Damit ist es möglich, zunächst festzustellen, ob ausreichend viele fahrbare Trajektorien im Komfortbereich des Fahrers liegen, um die Führung des Kraftfahrzeugs beim Fahrer zu belassen. Ist dies nicht der Fall, wobei jedoch immer noch Trajektorien im Komfortbereich des Fahrers möglich sind, so kann eine Führung des Kraftfahrzeugs durch das Fahrerassistenzsystem mit einer der Trajektorien im Komfortbereich erfolgen. Ist dies jedoch nicht möglich, so kann zur autonomen Führung des Kraftfahrzeugs eine der fahrbaren Trajektorien genutzt werden, die zwar physikalisch möglich ist, jedoch jenseits des Komfortbereichs des Fahrers liegt.

Vorzugsweise kann das Fahrerassistenzsystem dazu ausgebildet sein, in dem Fall, wenn keine fahrbare Trajektorie ermittelt werden kann, wenigstens eine Randbedingung anzupassen und fahrbare Trajektorien erneut zu berechnen. Wie eingangs erwähnt wurde, ist es insbesondere beim plötzlichen Auftreten von unerwarteten Verkehrssituationen nicht immer möglich, eine physikalisch mögliche Trajektorie im Fahrbereich unter den verwendeten Randbedingungen zu ermitteln. Eine Berechnung einer fahrbaren Trajektorie kann unter Umständen nicht erfolgen, weil bestimmte Randbedingungen nicht derart gewählt wurden, dass sie tatsächlichen physikalischen Grenzen entsprechen, sondern beispielsweise so, dass sie einen Komfortbereich eines Fahrers beschreiben. Daher ist es vorteilhaft, wenn das Fahrerassistenzsystem vor dem Ermitteln der Notfalltrajektorie zum Anpassen wenigstens einer Randbedingung und zur Neuberechnung der fahrbaren Trajektorien ausgebildet ist.

Insbesondere ist es möglich, dass bei der Berechnung der fahrbaren Trajektorien ausschließlich der Bereich der Fahrbahn selbst, also der Bereich einer Straße, der für den Fahrzeugverkehr bestimmt ist, als Fahrbereich betrachtet wird und damit eine Randbedingung zur Bestimmung der fahrbaren Trajekto-

rien bildet. Verlässt nun das Kraftfahrzeug, beispielsweise aufgrund einer plötzlichen Lenkbewegung des Fahrers oder einer unerwarteten Verkehrssituation, den Fahrbahnbereich, so muss das Kraftfahrzeug zur Rückkehr auf die Fahrbahn einen Bereich überqueren, der nicht der Fahrbahn zugehörig ist. Es ist vorteilhaft, wenn in diesem Fall der Fahrbereich derart angepasst wird, dass der Bereich zwischen Kraftfahrzeug und Fahrbahn, soweit er frei von Hindernissen ist, dem Fahrbereich hinzugefügt wird. Auch in Fällen, in denen Kollisionen mit weiteren Kraftfahrzeugen vermieden werden sollen, kann es vorteilhaft sein, Bereiche neben der Straße zum Fahrbereich hinzuzufügen.

Es ist jedoch auch möglich, andere Randbedingungen zu variieren. Beispielsweise können in einigen Ausführungsformen des erfindungsgemäßen Kraftfahrzeugs bei der Berechnung der fahrbaren Trajektorien die Randbedingungen derart festgelegt sein, dass zunächst nur fahrbare Trajektorien in einem Komfortbereich des Fahrers ermittelt werden. In diesem Fall ist es möglich, dass zunächst statt der Berechnung einer Notfalltrajektorie die Bedingungen an die tatsächlichen physikalischen Randbedingungen angepasst werden und die fahrbaren Trajektorien neu berechnet werden. Ergänzend oder alternativ ist es auch möglich, dass Sicherheitsabstände oder Sicherheitsintervalle für bestimmte Parameter reduziert werden. Zudem können beispielsweise einige Fahrzeugsysteme wie Bremsen, Motor oder Ähnliches einen Arbeitsbereich aufweisen, in dem eine Beschädigung der Komponente möglich ist. Typischerweise werden die Randbedingungen bei der Berechnung der fahrbaren Trajektorien in diesem Fall zunächst so gewählt werden, dass dieser Betriebsbereich gemieden wird.

Es ist möglich, dass das Fahrerassistenzsystem dazu ausgebildet ist, in dem Fall, wenn, insbesondere nach Anpassen der Randbedingung, keine fahrbare Trajektorie ermittelt werden kann, in einen dritten Betriebsmodus umzuschalten, in dem eine Notfalltrajektorie bestimmt wird.

Damit kann, wenn keine physikalisch fahrbare Trajektorie existiert, die eine Kollision mit einem Hindernis vermeidet, die Steuertrajektorie derart be-

stimmt werden, dass insbesondere Personenschäden vermieden werden können und Schäden an dem eigenen Kraftfahrzeug, weiteren Kraftfahrzeugen oder Drittgegenständen weitest möglich reduziert werden. Das grundsätzliche Vorgehen zum Berechnen einer solchen Trajektorie ist dem Fachmann bekannt und wird daher nicht näher erläutert.

Im erfindungsgemäßen Verfahren ist damit ein abgestuftes Eingreifen in den Fahrbetrieb möglich. Dabei ist es zunächst möglich, fahrbare Trajektorien unter relativ engen Randbedingungen, die insbesondere einen Komfortbereich des Fahrers berücksichtigen, zu bestimmen. Wird anhand dieser Trajektorien ermittelt, dass die Umschaltbedingung nicht erfüllt ist, was typischerweise bedeutet, dass eine Vielzahl verschiedener Trajektorien innerhalb der ersten Randbedingungen möglich ist, so wird nicht in den Fahrbetrieb eingegriffen und die Führung des Kraftfahrzeugs verbleibt beim Fahrer. Ist die Umschaltbedingung erfüllt und es wurden fahrbare Trajektorien unter den ersten Randbedingungen ermittelt, so kann der Fahrbetrieb im zweiten Betriebsmodus entlang einer dieser fahrbaren Trajektorien fortgesetzt werden. Damit ist es insbesondere möglich, den Fahrbetrieb im Komfortbereich des Fahrers entlang einer gewünschten Sollroute fortzusetzen. Wurde unter den ersten Randbedingungen keine fahrbare Trajektorie ermittelt, so können eine oder mehrere dieser Randbedingungen angepasst werden. Insbesondere kann eine Einschränkung der Trajektorienparameter auf den Komfortbereich des Fahrers aufgegeben werden. Wird mit dem so gebildeten zweiten Randbedingungen wenigstens eine Trajektorie ermittelt, so kann der Fahrbetrieb fortgesetzt werden, es ist jedoch möglich, dass beispielsweise der Komfortbereich eines Fahrers bei der Fortsetzung des Fahrbetriebs verlassen wird. Kann auch nach einer, unter Umständen mehrmaligen, Anpassung der Randbedingungen keine fahrbare Trajektorie ermittelt werden, so wird eine Notfalltrajektorie bestimmt. Mit einer solchen Notfalltrajektorie wird die Zielposition nicht erreicht, das heißt es erfolgt keine Fortsetzung des Fahrbetriebs. Mit der Berechnung und Ausführung einer Notfalltrajektorie werden die typischen Funktionen eines Kollisionsvermeidungs- beziehungsweise Kollisionsfolgenminderungssystems erreicht, das heißt es kann versucht werden, das Fahrzeug zum sicheren Stillstand zu bringen oder es können

Kollisionsfolgen minimiert werden. Damit wird im erfindungsgemäßen Kraftfahrzeug ein Eingriff in den Fahrbetrieb möglich, der nach der Kritikalität der Fahrsituation abgestuft ist.

Bei einem Betrieb des Fahrerassistenzsystems im zweiten Betriebsmodus werden dem Fahrer zumindest Teile der Kraftfahrzeugführung entzogen. Zudem kann es zu ungewöhnlich hohen Beschleunigungen in Längs- oder Querrichtung des Kraftfahrzeugs kommen. Daher ist es vorteilhaft, wenn das Fahrerassistenzsystem zum Ansteuern einer Hinweiseinrichtung zur Gabe eines akustischen, haptischen und/oder optischen Hinweises beim Umschalten in den zweiten Betriebsmodus und/oder vor Umschalten in den ersten Betriebsmodus, als Hinweis zur Fahrerübernahme, ausgebildet ist. Ein Hinweis zur Fahrerübernahme ist vorteilhaft, um den Fahrer darauf hinzuweisen, dass er nun wieder für die Führung des Kraftfahrzeugs verantwortlich sein soll.

Das Kraftfahrzeug kann eine Kommunikationseinrichtung zur drahtlosen Fahrzeug-zu-Fahrzeugkommunikation und/oder zur drahtlosen Fahrzeug-zu-Infrastrukturkommunikation aufweisen, wobei das Fahrerassistenzsystem zur Ermittlung von Umgebungsdaten durch Ansteuerung der Kommunikationseinrichtung zur Kommunikation mit Informationsquellen und/oder zur Kommunikation mit anderen Kraftfahrzeugen zur Übertragung von Warnhinweisen, insbesondere beim Umschalten in den zweiten Betriebsmodus, ausgebildet ist. Insbesondere können durch die Kommunikationseinrichtung Informationen über wenigstens ein weiteres Kraftfahrzeug, beispielsweise dessen Position, Geschwindigkeit, Lenkwinkel, Trajektorien und/oder geplante Manöver empfangen werden. Durch diese Informationen kann die Bewegungsvoraussage für dieses Kraftfahrzeuge verbessert werden, wodurch eine zuverlässigere Planung des eigenen Fahrbetriebs möglich ist. Es ist jedoch auch möglich, über die Kommunikationseinrichtung auf externe Datenbanken zuzugreifen. Datenbanken können insbesondere Informationen in einem fahrzeugeigenen Navigationssystem ersetzen oder ergänzen. Zur zuverlässigen Trajektorienberechnung sind exakte Informationen über den Verlauf der Fahrbahn, insbesondere Neigungswinkel, Steigungen, Kurvenradien und

Ähnliches notwendig. Sind solche Daten nicht im Kraftfahrzeug oder einem Navigationssystem gespeichert, so können sie, insbesondere bereits zeitlich beabstandet vor dem Befahren des entsprechenden Straßenabschnitts, drahtlos aus einer Datenbank abgerufen werden.

Eine Gabe eines Warnsignals an weitere Fahrzeuge ist insbesondere vorteilhaft, da der zweite Betriebsmodus insbesondere in Notsituationen oder beim Fahren im physikalischen Grenzbereich beziehungsweise beim Fahren jenseits eines Komfortbereichs eines Fahrers, genutzt wird. Damit werden im zweiten Betriebsmodus mit erhöhter Wahrscheinlichkeit unerwartete Fahrmanöver oder Fahrmanöver an den physikalischen Grenzen des Kraftfahrzeugs durchgeführt. Es ist daher für andere Kraftfahrzeuge vorteilhaft, einen zusätzlichen Sicherheitsabstand zum eigenen Kraftfahrzeug zu wahren. Es ist auch möglich, dass die Kommunikationseinrichtung Fahrhinweise an die anderen Kraftfahrzeuge überträgt, um beispielsweise in Notsituationen einen größeren Fahrbereich nutzen zu können.

Kritische Situationen, in denen eine zuverlässige Beherrschung des Kraftfahrzeugs nicht mehr möglich ist, treten auf, wenn der Fahrer nicht mehr fähig ist, das Fahrzeug ordnungsgemäß zu steuern, beispielsweise weil er krank, übermüdet oder durch eine Situation überfordert ist. Ist der Fahrer nicht mehr fähig, das Fahrzeug ordnungsgemäß zu steuern, ist es zwar gewünscht, das Kraftfahrzeug zumindest mittelfristig zum Stillstand zu bringen, dennoch kann es auch vorteilhaft sein, das Kraftfahrzeug zunächst weiter zu betreiben und autonom in eine vorteilhafte Abstellposition zu fahren. Da in diesem Fall jedoch keine Rückgabe der Fahrzeugkontrolle an den Fahrer vor dem Abstellen des Kraftfahrzeugs gewünscht ist, ist es vorteilhaft, wenn das Fahrerassistenzsystem diesen Fall gesondert erkennt und in einen separaten Betriebsmodus wechselt.

Das Fahrerassistenzsystem kann daher in einem vierten Betriebsmodus zur autonomen Steuerung der Lenkung und/oder der Bremssysteme und/oder des Motors und/oder des insbesondere automatischen Getriebes des Kraftfahrzeugs ohne Eingriffsmöglichkeit durch den Fahrer ausgebildet sein, und

das Kraftfahrzeug kann in eine sichere Abstellposition verbracht werden. Das abgestellte Kraftfahrzeug ist damit kein Verkehrshindernis für andere Verkehrsteilnehmer. Es wird im vierten Betriebsmodus vollständig autonom zu einer sicheren Abstellposition verbracht. Die sichere Abstellposition kann relativ nahe sein, beispielsweise ein Standstreifen einer Autobahn, es kann jedoch auch eine längere Strecke, beispielsweise bis zum nächsten Parkplatz, gefahren werden. Insbesondere wenn eine Krankheit des Fahrers, beispielsweise ein Herzinfarkt, festgestellt wird, ist es auch möglich, dass über eine Kommunikationseinrichtung des Kraftfahrzeugs ein Notruf abgesendet wird.

Insbesondere kann das Kraftfahrzeug ein Fahrerzustandserfassungsmittel zur Erfassung eines Fahrerzustands umfassen und das Fahrerassistenzsystem bei Ermittlung eines Fahrerzustandes, der eine Fahruntüchtigkeit des Fahrers anzeigt, zum Umschalten in den vierten Betriebsmodus ausgebildet sein. So kann ein Fahrerzustand beispielsweise durch eine Kamera und die Ermittlung einer Sitzposition oder einer Augenstellung ermittelt werden. Es ist auch möglich, beispielsweise den Puls oder den Herzschlag eines Fahrers oder Bedienhandlungen, wie Lenkbewegungen, zu erfassen. Durch diverse Erfassungsmittel können insbesondere Müdigkeit und Krankheit von Fahrern festgestellt werden.

Es ist ergänzend oder alternativ auch möglich, dass das Fahrerassistenzsystem bei einem Umschalten vom zweiten Betriebsmodus in den ersten Betriebsmodus zum Warten auf eine Eingabe eines Fahrers zur Fahrerübernahme und bei Nichterfolgen dieser Eingabe innerhalb eines vorgegebenen Zeitintervalls zum Umschalten in den vierten Betriebsmodus ausgebildet ist. Insbesondere kann vor Wechseln in den vierten Betriebsmodus ein wiederholter Hinweis an den Fahrer mit insbesondere steigender Intensität gegeben werden. Dieser Hinweis kann durch weitere Eingriffe in den Fahrbetrieb, wie beispielsweise ein kontinuierliches Verlangsamen des Kraftfahrzeugs oder Ähnliches ergänzt werden. Ein Wechsel in den vierten Betriebsmodus in diesem Fall ist vorteilhaft, da ein weiterer Betrieb des Kraftfahrzeugs nicht ge-

wünscht wird, wenn der Fahrer nicht fähig oder willens ist, die Fahrzeugführung wieder zu übernehmen.

Zudem kann das Fahrerassistenzsystem dazu ausgebildet sein, bei Ermittlung einer vorgegebenen Mindestzahl und/oder bei Ermittlung einer vorgegebenen Mindesthäufigkeit von Umschaltungen vom ersten in den zweiten Betriebsmodus innerhalb eines vorgegebenen Zeitraums in den vierten Betriebsmodus umzuschalten. Ein regelmäßiges Umschalten des Fahrerassistenzsystems in den zweiten Betriebsmodus weist darauf hin, dass der Fahrer regelmäßig die Fahrsituation falsch einschätzt oder nicht mehr zur Führung des Kraftfahrzeugs fähig ist. Dies kann darauf hinweisen, dass der Fahrer müde oder unkonzentriert ist, sich in einem erregten Gemütszustand befindet oder ohnmächtigt ist. In diesem Fall kann es vorteilhaft sein, das Fahrzeug vorübergehend stillzulegen. Der vorgegebene Zeitraum kann insbesondere eine Fahrt mit dem Kraftfahrzeug, also die Zeit vom Starten des Kraftfahrzeugs bis zum Abschalten des Kraftfahrzeugs sein, es kann sich aber auch um eine vorgegebene Zeit wie beispielsweise eine oder zwei Stunden oder eine gewisse durch das Kraftfahrzeug zurückgelegte Entfernung handeln.

Beim Wechsel des Kraftfahrzeugs in den vierten Betriebsmodus kann davon ausgegangen werden, dass der Fahrer nicht fahrfähig ist. Es handelt sich also um eine Notsituation, in der es gerechtfertigt ist, die Fahrfreiheit der anderen Kraftfahrzeuge einzuschränken, um ein schnelles und sicheres Abstellen des Kraftfahrzeugs zu ermöglichen. Es ist daher möglich, dass das Kraftfahrzeug eine Kommunikationseinrichtung umfasst und das Fahrerassistenzsystem im vierten Betriebsmodus zur Ermittlung eines Sollfahrmanövers für wenigstens ein weiteres Kraftfahrzeug und zur Ansteuerung der Kommunikationseinrichtung zur Übertragung des Sollfahrmanövers an das Kraftfahrzeug ausgebildet ist, wobei insbesondere zusätzlich zum Sollfahrmanöver eine Prioritätsinformation übertragbar ist.

Es kann vorgesehen sein, dass das Kraftfahrzeug auch zum Empfang solcher Nachrichten ausgebildet ist, wobei insbesondere eine höchste Prioritätsinformation möglich ist, die eine Notsituation anzeigt. Beim Empfang einer

Nachricht mit einer solchen höchsten Prioritätsinformation kann das Fahrerassistenzsystem dazu ausgebildet sein, diese Sollfahrmanöver auszuführen, soweit dies sicher möglich ist.

Verschiedene Fahrer haben stark unterschiedliche Komfortbereiche, in denen sie Kraftfahrzeuge komfortabel und zuverlässig führen können. Daher ist es vorteilhaft, wenn die Umschaltbedingung und/oder die Randbedingung zur Berechnung der fahrbaren Trajektorien und/oder die Bestimmung der Steuertrajektorie von einer vorgegebenen oder durch das Fahrerassistenzsystem ermittelten Eigenschaft des Fahrers abhängig ist. Es ist insbesondere möglich, dass die Fahrereigenschaft durch eine Selbsteinschätzung des Fahrers und ein Bedienelement einstellbar ist. So kann das Fahrerassistenzsystem beispielsweise zwischen den Stellungen „sportlich" und „Komfort" umstellbar sein. Es ist aber auch möglich, dass Eigenschaften des Fahrers, wie das Alter des Fahrers, der Müdigkeitszustand und Ähnliches, erfasst werden. Alternativ oder ergänzend ist jedoch auch möglich, die Eigenschaft durch eine Sensorik des Kraftfahrzeugs zu erfassen beziehungsweise anzupassen. Beispielsweise können die Lenkbewegungen ausgewertet werden oder der Fahrer kann durch eine Kamera oder eine weitere Sensorik beobachtet werden.

Es ist insbesondere möglich, dass eine fahrerabhängige Warnbedingung vorgesehen ist, die technisch genauso umgesetzt werden kann wie die Umschaltbedingung, wobei jedoch andere Randbedingungen, Grenzwerte oder Ähnliches genutzt werden. Bei Erfüllen dieser Warnbedingung kann zunächst eine Warnung ausgegeben werden, um den Fahrer darauf hinzuweisen, dass nun Trajektorien zu fahren sind, die jenseits seines Komfortbereichs liegen. Zudem kann auch eine Umschaltbedingung entsprechend angepasst werden, so dass ein Fahrer zunächst gewarnt werden kann, dass sein Komfortbereich verlassen wird, und ab einem gewissen Grad des Übersteigens des Komfortbereichs ein Umschalten in den zweiten Betriebsmodus erfolgen kann, so dass ein autonomes Fahren nur knapp jenseits des Komfortbereichs des Fahrers erfolgt.

Des Weiteren betrifft die Erfindung ein Verfahren zur Steuerung eines Kraftfahrzeugs, umfassend wenigstens ein Fahrerassistenzsystem und wenigstens ein Erfassungsmittel, wobei das Kraftfahrzeug in einem ersten Betriebsmodus des Fahrerassistenzsystems durch einen Fahrer steuerbar ist, umfassend die Schritte:

- Erfassen von das Kraftfahrzeug betreffenden Egodaten und das Kraftfahrzeugumfeld betreffenden Umfelddaten durch das Erfassungsmittel,
- Vorausberechnen zukünftiger Fahrsituationen des Kraftfahrzeugs durch Auswertung der Egodaten und der Umfelddaten durch das Fahrerassistenzsystem,
- Überprüfen, ob eine zumindest von den zukünftigen Fahrsituationen abhängige Umschaltbedingung erfüllt ist, durch das Fahrerassistenzsystem,
- temporäreres Umschalten in den zweiten Betriebsmodus des Fahrerassistenzsystems, falls die Umschaltbedingung erfüllt ist,
- autonomes Steuern des Kraftfahrzeugs ohne Eingriffsmöglichkeit des Fahrers zur Fortsetzung des Fahrbetriebs durch das Fahrerassistenzsystem im zweiten Betriebsmodus.

Das Verfahren kann selbstverständlich gleichartig weitergebildet werden wie das beschriebene Kraftfahrzeug.

Weitere Vorteile und Einzelheiten der Erfindung ergeben sich aus den Ausführungsbeispielen sowie den zugehörigen Zeichnungen. Dabei zeigen:

Fig. 1 eine schematische Darstellung eines Ausführungsbeispiels des erfindungsgemäßen Kraftfahrzeugs,

Fig. 2 eine schematische Darstellung zur Bestimmung der möglichen Trajektorien im Fahrerassistenzsystem des erfindungsgemäßen Kraftfahrzeugs,

Fig. 3 eine Verkehrssituation,

Fig. 4 eine weitere Verkehrssituation,

Fig. 5 eine dritte Verkehrssituation,

Fig. 6 eine vierte Verkehrssituation,

Fig. 7 ein Ablaufdiagramm eines Ausführungsbeispiels des erfindungsgemäßen Verfahrens, und

Fig. 8 ein Ablaufdiagramm eines weiteren Ausführungsbeispiels des erfindungsgemäßen Verfahrens.

Fig. 1 zeigt ein Kraftfahrzeug 1 mit einem Fahrerassistenzsystem 2, das bei der Ermittlung einer kritischen Situation, wenn sich das Fahrzeug innerhalb eines vorgegebenen Zeitintervalls voraussichtlich im physikalischen Grenzbereich oder jenseits eines Komfortbereichs des Fahrers bewegen wird, zur autonomen Führung des Kraftfahrzeugs 1 ausgebildet ist. Das Kraftfahrzeug 1 ist mit einem Drive-by-Wire-System ausgestattet, so dass im normalen Fahrbetrieb die Lenkbewegungen eines Fahrers durch einen Lenkwinkelsensor 7 erfasst werden und die Lenkbewegungen unter Umständen nach einer Weiterverarbeitung durch ein nicht gezeigtes Steuersystem über den CAN-Bus 3 an die Lenkung 8 übertragen werden. Ebenso können auch Betätigungen eines nicht gezeigten Bremspedals, Gaspedals, eines Bedienelements der Schaltung an die entsprechenden Einrichtungen des Kraftfahrzeugs 1 übertragen werden. Im normalen Fahrbetrieb erfolgt die Führung des Kraftfahrzeugs 1 primär durch den Fahrer. So kann der Fahrer entweder das Kraftfahrzeug vollständig führen oder der Fahrer kann bei der Führung des Kraftfahrzeugs durch Fahrerassistenzsysteme wie beispielsweise eine automatische Abstandsregelung, einen Spurassistenten oder Ähnliches, unterstützt werden. Wesentlich ist, dass in einem ersten Betriebsmodus, der einen üblichen Fahrbetrieb darstellt, der Fahrer stets die vollständige Kontrolle über das Fahrzeug hat, das heißt, unterstützende Fahrerassistenzsysteme jederzeit übersteuern kann.

Während des Betriebs des Kraftfahrzeugs 1 kann das Fahrerassistenzsystem 2 über den CAN-Bus 3 stets Informationen einer Vielzahl von Fahrzeugsystemen abfragen, um zukünftige Fahrsituationen des Kraftfahrzeugs 1 für ein vorgegebenes Zeitintervall vorauszuberechnen. Das Fahrerassistenzsystem 2 kann Daten eines Navigationssystems 4 nutzen, um eine geplante Route des Kraftfahrzeugs 1 zu ermitteln und weitere Informationen über den Straßenverlauf, beispielsweise eine Neigung oder eine Steigung der Straße, Kurvenradien, örtliche Verkehrsregeln und Ähnliches abzufragen. Die aus dem Navigationssystem 4 gewonnenen Daten können zudem durch Daten eines Umfeldsensors 13, der als Kamera ausgeführt ist, ergänzt werden. Im Kraftfahrzeug ist zudem eine Positionsbestimmungseinrichtung 5 zur Bestimmung der Fahrzeugposition, beispielsweise ein GPS-Sensor, vorgesehen.

Über eine Kommunikationseinrichtung 6 kann das Fahrerassistenzsystem 2 zudem weitere Umfeldinformationen gewinnen, indem es beispielsweise mit weiteren Kraftfahrzeugen über eine Car-2-Car-Kommunikation oder mit Infrastruktureinrichtungen und/oder anderen Kraftfahrzeugen durch eine Car-2-X-Kommunikation kommuniziert. Damit können direkt Informationen über das Fahrverhalten weiterer Kraftfahrzeuge und Ähnliches gewonnen werden, um ein verbessertes Umfeldmodell zu berechnen. Über die Kommunikationseinrichtung 6 kann auch eine drahtlose Kommunikation mit Datenbanken, insbesondere Internetdatenbanken, erfolgen, um das Umgebungsmodell zu ergänzen.

Das Fahrerassistenzsystem 2 ist zudem dazu ausgebildet, eine Vielzahl von Sensoren auszulesen, die einen Parameter des Kraftfahrzeugs 1 messen. So können die Stellung eines automatischen Getriebes 12 und/oder die Parameter einer Motorsteuerung 11 ausgelesen werden. Aus den Daten eines Lenkwinkelsensors 7 sowie an einer Lenkung 8 angeordneter Sensoren kann ein Lenkwinkel des Kraftfahrzeugs 1 bestimmt werden. Weitere Sensoren sind Sensoren am Bremssystem 10 oder Rotationssensoren 9 an den Rädern.

Aus den zahlreichen Egodaten des Kraftfahrzeugs 1 und den zahlreichen ermittelten Umfelddaten kann ein Dynamikmodell für das eigene Kraftfahrzeug sowie ein detailliertes Umfeldmodell errechnet werden, wobei insbesondere die Bewegung von weiteren Kraftfahrzeugen durch ein weiteres Dynamikmodell prognostiziert werden kann. Das Fahrerassistenzsystem 2 kann mögliche zukünftige Fahrsituationen dadurch ermitteln, dass mehrere mögliche Trajektorien für das Kraftfahrzeug 1 ermittelt werden. Solche Trajektorien können insbesondere auf einer durch das Fahrerassistenzsystem 2 ermittelten Sollroute des Kraftfahrzeugs verlaufen. Die zeitliche oder örtliche Länge der Trajektorien kann von der Verkehrsdichte und/oder der Fahrzeuggeschwindigkeit abhängen.

Solche Trajektorien können bestimmt werden, indem zunächst ein Fahrbereich für das Kraftfahrzeug 1 ermittelt wird, in dem ein Fahrbetrieb des Kraftfahrzeugs 1 möglich ist. In diesem Bereich werden zunächst Trajektorien bestimmt, die durch das Kraftfahrzeug 1 geometrisch befahrbar sind und anschließend können Geschwindigkeitsprofile für diese Trajektorien ermittelt werden. Alternativ ist es hier auch möglich, Trajektorien direkt als Trajektorien zu berechnen, die sowohl Orts- als auch Geschwindigkeitsdaten, sowie unter Umständen weitere Parameter umfassen.

Aus den so berechneten Trajektorien kann auf vielfältige Weise bestimmt werden, ob eine kritische Fahrsituation für das Kraftfahrzeug zu erwarten ist. Insbesondere kann aus den möglichen Trajektorien wenigstens ein Grenzwert für einen Fahrzeugparameter, insbesondere die Fahrzeuggeschwindigkeit, bestimmt werden und bei Überschreiten dieses Grenzwertes, beispielsweise bei Überschreiten einer aus den Trajektorien bestimmten maximalen Geschwindigkeit, ein kritischer Zustand festgestellt werden und in den zweiten Betriebsmodus gewechselt werden, in dem der Betrieb des Kraftfahrzeugs autonom ohne Eingriffsmöglichkeit durch den Fahrer erfolgt. Alternativ oder ergänzend kann das Fahrerassistenzsystem 2 die Trajektoriendaten auch direkt auswerten. Insbesondere wird ausgewertet, ob ein durch die Trajektorien bedeckter Bereich, also ein Fahrschlauch, eine gewisse Mindestbreite aufweist oder ob eine gewisse Mindestanzahl beabstandeter Trajekto-

rien durch das Kraftfahrzeug fahrbar ist. Wird die Mindestanzahl an Trajektorien beziehungsweise die Mindestbreite des Fahrschlauchs unterschritten und wurde zumindest eine fahrbare Trajektorie ermittelt, so wechselt das Fahrerassistenzsystem 2 in den zweiten Betriebsmodus. Im zweiten Betriebsmodus erfolgt die Steuerung der Lenkung 8, des Bremssystems 10, des Motors 11 sowie des automatischen Getriebes 12 autonom durch das Fahrerassistenzsystem 2, derart, dass das Kraftfahrzeug 1 entlang einer Steuertrajektorie bewegt wird, die durch die Steuereinrichtung 2 aus den fahrbaren Trajektorien gewählt wird.

Es kann auch ermittelt werden, ob überhaupt eine sicher fahrbare Trajektorie für das Kraftfahrzeug möglich ist. Ein „Nichtfinden" einer fahrbaren Trajektorie kann verschiedene Ursachen haben. So können bei der Bestimmung der fahrbaren Trajektorie Grenzwerte genutzt werden, die von einem Komfortbereich des Fahrers abhängen. Der Komfortbereich des Fahrers kann über ein Bedienelement 14 voreingestellt werden. Im laufenden Betrieb des Kraftfahrzeugs 1 kann das Fahrerassistenzsystem 2 zudem die durch den Fahrer gefahrenen Trajektorien auswerten und den Komfortbereich entsprechend anpassen. Ein Nichtauffinden einer fahrbaren Trajektorie bedeutet dann nur, dass der Komfortbereich des Fahrers verlassen werden muss. Es können dann andere Grenzwerte festgelegt werden, die immer noch sicherstellen, dass die ermittelte Trajektorie physikalisch fahrbar ist, wobei eine Fahrt des Kraftfahrzeugs 1 entlang dieser Trajektorie jedoch jenseits des Komfortbereich des Fahrers liegt, also beispielsweise relativ große seitliche Beschleunigungen auftreten.

Ein Nichtermitteln einer fahrbaren Trajektorie kann jedoch auch darauf zurückzuführen sein, dass keine sicher fahrbare Trajektorie in einem vordefinierten Fahrbereich existiert. In diesem Fall kann das Fahrerassistenzsystem 2 sichere Trajektorien berechnen, indem der Fahrbereich neu definiert wird und beispielsweise neben der Fahrbahn liegende Bereiche zum Fahrbereich hinzugenommen werden und anschließend neue Trajektorien bestimmt werden.

Es ist jedoch auch möglich, dass, insbesondere bei einem unerwarteten Auftreten einer Verkehrssituation, keine Trajektorie berechnet werden kann, bei der ein sicheres Fahren möglich ist. So sind abhängig von einem Fahrverhalten weiterer Kraftfahrzeuge unter Umständen Situationen möglich, in denen ein Unfall durch das eigene Kraftfahrzeug 1 nicht vermieden werden kann. In diesen Fällen ist es möglich, dass das Fahrerassistenzsystem 2 in einen dritten Betriebsmodus wechselt, in dem es eine Notfalltrajektorie der Art berechnet, dass Schäden an Personen, an dem eigenen Kraftfahrzeug und Drittfahrzeugen minimiert werden.

Die Ermittlung von Trajektorien für das Kraftfahrzeug 1 und die Auswertung dieser Trajektorien bezüglich der Erfüllung von Umschaltbedingungen in verschiedenen Betriebsmodi werden später mit Bezug auf die in Fig. 2 bis Fig. 5 gezeigten Fahrsituationen erläutert. Die entsprechenden Verfahren zur Steuerung eines Kraftfahrzeugs werden mit Bezug auf Fig. 7 beschrieben.

Das Fahrerassistenzsystem 2 kann die Daten eines Fahrerzustandserfassungsmittels 17 auswerten. Das Fahrerzustandserfassungsmittel 17 ist als Kamera ausgebildet, die ein Bild des Fahrers aufnimmt und beispielsweise den Lidschlag oder eine Sitzposition des Fahrers erfasst und daraus auf einen Fahrerzustand schließt. Weitere Informationen über einen Fahrerzustand können durch Auswertung von Lenkbewegungen oder anderen Steuereingriffen des Fahrers ermittelt werden. Das Fahrerassistenzsystem 2 kann mit Hilfe dieser Eingabedaten einen Fahrerzustand erkennen und insbesondere ermitteln, wenn ein Fahrer nicht fahrtüchtig ist. Eine solche Fahruntüchtigkeit des Fahrers kann beispielsweise durch Erkrankungen, insbesondere einen Herzinfarkt oder eine Übermüdung des Fahrers begründet sein.

Wird ein solcher Fahrerzustand festgestellt, dann soll das Kraftfahrzeug 1 typischerweise nicht weiterbetrieben werden. Ein direktes Abstellen des Kraftfahrzeugs 1 würde jedoch zu einem Stehenbleiben des Kraftfahrzeugs in einer potentiell verkehrsungünstigen Position führen. Daher ist das Fahrerassistenzsystem 2 bei Ermittlung eines Fahrerzustandes, der auf eine Fahruntüchtigkeit des Fahrers hinweist, dazu ausgebildet, in einen vierten

Betriebsmodus zu wechseln, in dem es das Kraftfahrzeug autonom zu einer sicheren Abstellposition steuert. Eine solche sichere Abstellposition kann beispielsweise ein Standstreifen einer Autobahn, ein Parkplatz oder Ähnliches sein. Insbesondere wenn ein krankheitsbedingter fahruntüchtiger Zustand des Fahrers ermittelt wird, kann ist es auch möglich, dass das Fahrerassistenzsystem 2 ein Notrufsignal über die Kommunikationseinrichtung 6 sendet.

Ein sicheres Abstellen des Kraftfahrzeugs soll möglichst zeitnah erfolgen. In zahlreichen Verkehrssituationen, insbesondere bei einem Fahren auf der Überholspur einer Autobahn, kann ein Weg zu einer sicheren Abstellposition jedoch durch weitere Verkehrsteilnehmer blockiert sein. Das Fahrerassistenzsystem 2 kann in diesem Fall durch Auswertung der Umfelddaten Sollfahrmanöver für weitere Kraftfahrzeuge ermitteln und diese über die Kommunikationseinrichtung 6 an diese Kraftfahrzeuge übertragen. Es ist dabei möglich, dass mit dem Sollfahrmanöver eine Prioritätsinformation übertragen wird, die den weiteren Kraftfahrzeugen anzeigt, dass eine Notsituation vorliegt, und der Fahrer des Kraftfahrzeugs 1 sich in einem fahruntüchtigen Zustand befindet.

Dementsprechend wechselt das Fahrerassistenzsystem des Kraftfahrzeugs 1 bei Empfang eines Sollfahrmanövers mit einer entsprechenden Priorität durch die Kommunikationseinrichtung 6 in einen fünften Betriebsmodus des Fahrerassistenzsystems 2, in dem das empfangene Sollfahrmanöver, soweit dies sicher möglich ist, durchgeführt wird. Durch die Nutzung von Prioritätsinformationen und die Übertragung von Sollfahrmanövern ist es möglich, ein Kraftfahrzeug 1 bei einem fahruntüchtigen Zustand des Fahrers besonders schnell und besonders sicher abzustellen.

Die Kommunikationseinrichtung 6 zur Kommunikation mit weiteren Fahrzeugen kann auch in Fällen genutzt werden, in denen andere kritische Fahrsituationen ermittelt werden. Im einfachsten Fall kann das Fahrerassistenzsystem 2 beim Wechsel in einen zweiten oder dritten Betriebsmodus, in dem die Steuerung des Kraftfahrzeugs autonom erfolgt, da eine kritische Situation

prognostiziert ist, die Kommunikationseinrichtung 6 zur Übertragung eines Warnsignals an weitere Kraftfahrzeuge ansteuern. Zur Warnung des Fahrers selbst beim Wechsel in den oder aus dem autonomen Fahrbetrieb ist eine Hinweiseinrichtung 15 vorgesehen, die den Fahrer akustisch benachrichtigt.

Fig. 2 zeigt eine Fahrsituation, in der sich das Kraftfahrzeug 1 auf eine Kurve 26 zubewegt. Anhand dieser Darstellung soll beispielhaft eine Möglichkeit zur Ermittlung möglicher Trajektorien für das Kraftfahrzeug erläutert werden. Dem Fahrerassistenzsystem 2 des Kraftfahrzeugs 1 stehen eine Vielzahl von Egoinformationen des Kraftfahrzeugs zur Verfügung. Neben Informationen über eine geplante Route des Kraftfahrzeugs 1, die insbesondere eine Bewegung eines Kraftfahrzeugs über einen längeren Zeitraum beschreiben, umfassen diese Egodaten Daten über den Ist-Zustand des Kraftfahrzeugs wie die Eigengeschwindigkeit des Kraftfahrzeugs 1, deren Betrag und Richtung durch den Pfeil 19 angedeutet ist, einen Winkel zwischen Kraftfahrzeug 1 und Straßenverlauf sowie einen Winkel zwischen Kraftfahrzeug 1 und Bewegungsrichtung, den sogenannten Schwimmwinkel, die Fahrzeugmasse, die Position des Fahrzeugschwerpunkts sowie Informationen über die einzelnen Räder 18, insbesondere einen Lenkwinkel der Räder 18, die Winkelgeschwindigkeit der Räder 18 sowie die Reibungskoeffizienten der Räder 18. Auch Informationen über die weiteren Parameter des Kraftfahrzeugs, wie eine maximale Beschleunigungs- und Bremsleistung, können in Berechnungen mit eingehen. Eine Vielzahl dieser Parameter kann durch Sensoren im Kraftfahrzeug 1 ermittelt werden, es ist jedoch auch möglich, dass einzelne Parameter, beispielsweise die Reibungskoeffizienten von Reifen oder die maximale Verzögerung und Beschleunigung, bereits im Kraftfahrzeug 1 gespeichert sind.

Neben den Egodaten ist zur Berechnung der möglichen Trajektorien ein möglichst exaktes Umfeldmodell notwendig. Parameter des Umfeldes können beispielsweise einer in das Navigationssystem 4 integrierten Datenbank entnommen werden, es ist jedoch auch möglich, weitere fahrzeuginterne Daten oder externe Datenbanken zu nutzen. Solche gespeicherten Daten kön-

nen durch Daten der Fahrzeugsensoren, insbesondere durch Kameradaten, ergänzt werden.

In der in Fig. 2 gezeigten Verkehrssituation sind zunächst keine weiteren Kraftfahrzeuge oder andere bewegte Hindernisse vorhanden. Hier wird ausschließlich auf die Bestimmung eines Umfeldmodells ohne bewegte Hindernisse und die Berechnung von Trajektorien für diesen Fall eingegangen werden. Daher werden als Umfelddaten zunächst ausschließlich Umfelddaten, die die Fahrbahn betreffen, berücksichtigt. Eine Fahrbahn kann durch einen lokalen Krümmungsradius 21 der Fahrbahn, eine lokale Fahrbahnneigung 24 und eine lokale Fahrbahnsteigung 25 beschrieben werden. Ausgehend von diesen Daten und den Egodaten des Kraftfahrzeugs können mögliche Trajektorien auf vielfältige Weise berechnet werden. Im Folgenden soll als einfaches Beispiel eine Berechnung der Trajektorien genutzt werden, bei der Trajektorien zunächst als reine Ortskurven bestimmt werden, für die in einem separaten Schritt zumindest ein mögliches Geschwindigkeitsprofil bestimmt wird. Selbstverständlich ist es alternativ möglich, exaktere Verfahren zu Trajektorienberechnungen zu nutzen, die beispielsweise dem Roll- und Nickwinkel des Kraftfahrzeugs berücksichtigen oder auch eine Driftbewegung des Kraftfahrzeugs, also eine Bewegung mit hohem Schwimmwinkel, berechnen können.

Zur rein geometrischen Berechnung von Trajektorien können zunächst die Grenztrajektorien 22 und 23 berechnet werden, die den durch das Fahrzeug befahrbaren Schlauch begrenzen. Diese Grenztrajektorien 22, 23 sind zum einen durch den begrenzten maximalen Lenkwinkel des Kraftfahrzeugs 1 und zum anderen durch den Fahrbereich bestimmt. In den in Fig. 2 gezeigten Beispiel ist der Fahrbereich so gewählt, dass stets ein Passieren eines entgegenkommenden Kraftfahrzeugs möglich ist, wobei sich das Kraftfahrzeug stets auf der Straße befindet. Die Begrenzungstrajektorien 22, 23 laufen also entfernt vom Kraftfahrzeug im Wesentlichen parallel zu den Begrenzungen der Fahrbahn. Nur in der unmittelbaren Umgebung des Kraftfahrzeugs sind diese Begrenzungstrajektorien 22, 23 gekrümmt, da der Lenkwinkel des Kraftfahrzeugs begrenzt ist. Es ist möglich, dass der Verlauf der Be-

grenzungstrajektorie 22, 23 vom Fahrbahnverlauf abweicht, wenn der Fahrbahnverlauf plötzliche Richtungsveränderungen aufweist, die einen größeren Winkel aufweisen, als der maximale Lenkwinkel des Kraftfahrzeugs.

Ergänzend wird eine Idealtrajektorie 20 berechnet, die mit einem a*-Verfahren berechnet werden kann. Die geometrisch möglichen Trajektorien können bestimmt werden, indem eine Vielzahl von Zwischentrajektorien zwischen der Idealtrajektorie 20 und den Begrenzungstrajektorien 22, 23 bestimmt werden. Hierbei können die Lenkwinkel im Bereich der Istposition des Kraftfahrzeugs variiert werden, um so einen kontinuierlichen Übergang zwischen den verschiedenen vorbestimmten Trajektorien zu erhalten. Die zwischen den Trajektorien 20, 22, 23 liegenden Trajektorien können jedoch auf vielfältige andere Art ermittelt werden, wobei jedoch insbesondere nur solche Trajektorien ermittelt werden, die maximal eine vorgegebene Zahl von Wendepunkten aufweisen. Trajektorien mit einer Vielzahl von Wendepunkten sind typischerweise nur mit wesentlich geringeren Geschwindigkeiten fahrbar als solche mit einer großen Zahl von Wendepunkten. Daher sind sie für ein Bewegen des Kraftfahrzeugs im physikalischen Grenzbereich nicht wesentlich.

Ergänzend sei angemerkt, dass es auch möglich ist, ausschließlich die Trajektorien 22, 23 vorzuberechnen und den Raum zwischen diesen Trajektorien anschließend durch eine Interpolation zwischen diesen Trajektorien zu füllen. Die geometrischen Trajektorien können entweder als einzelne Trajektorien bestimmt werden, indem Trajektorien mit einem vorgegebenen Abstand, beispielsweise von einigen cm berechnet werden. Es ist jedoch auch möglich, die Trajektorien als eine oder mehrere Trajektorienscharen zu berechnen, die über wenigstens einen Parameter parametrisiert sind. Beispielsweise können Trajektorien über eine Stärke der Krümmung und eine Länge des gekrümmten Bereichs definiert werden oder Ähnliches. Werden bei einer solchen Beschreibung der Trajektorien Wertebereiche für die Parameter vorgegeben, so ist es möglich, eine Vielzahl von Trajektorien sehr kompakt darzustellen.

Den einzelnen berechneten Trajektorien kann dann jeweils ein Geschwindigkeitsprofil zugewiesen werden. Sind die Trajektorien als Trajektorienschar definiert, ist es auch möglich, das Geschwindigkeitsprofil ebenso zu parametrisieren. Das Geschwindigkeitsprofil beschreibt einen Verlauf der Geschwindigkeiten des Kraftfahrzeugs 1 bei einer Bewegung entlang der Trajektorie, wobei eine Bewegung entlang der Trajektorien mit diesen Geschwindigkeiten eine oder mehrere Grenzbedingungen erfüllt. Eine entscheidende Grenzbedingung ist hierbei, dass die auf das Kraftfahrzeug 1 in der Kurve wirkende Zentrifugalkraft die Haftreibungskraft zwischen den Reifen 18 des Kraftfahrzeugs 1 und der Straße nicht übersteigt. Die Haftreibungskraft zwischen dem Kraftfahrzeug und der Straße kann im einfachsten Fall aus der Fahrzeugmasse und einem Reibkoeffizienten zwischen Straße und Reifen bestimmt werden. Es ist jedoch auch möglich, beispielsweise Nick- und Rollwinkel des Kraftfahrzeugs zu berücksichtigen, wodurch sich die Normalkräfte auf die einzelnen Reifen des Kraftfahrzeugs voneinander unterscheiden und damit unterschiedliche Reibkräfte für jeden der Reifen 18 des Kraftfahrzeugs 1 vorliegen.

Der Reibungskoeffizient für die Reifen ist abhängig vom Reifentyp für das Kraftfahrzeug festgelegt. Es ist auch möglich, diesen Reibungswert für die Reifen abhängig von der Fahrleistung des Reifens anzupassen oder dynamisch in bestimmten Fahrsituationen zu ermitteln. Ein Reibungswert für die Fahrbahn kann als fester Wert abgeschätzt werden. Es ist jedoch vorteilhaft, diesen Wert abhängig von Informationen beispielsweise eines Navigationssystems und einem oder mehrerer Fahrzeugsensoren anzupassen. Durch eine Kamera oder die Daten eines Navigationssystems wird die Art des Straßenbelags bestimmt. Aus der Art des Straßenbelags kann eine gute Voraussage für den Reibwert ermittelt werden. Zudem können durch eine Kamera beziehungsweise eine Bildauswertung Verunreinigungen der Straße erkannt werden und der lokale Reibungskoeffizient dementsprechend angepasst werden. Zudem können Witterungsbedingungen, insbesondere die Temperatur und die Feuchtigkeit der Straße, berücksichtigt werden.

Durch einen Vergleich der Reibungskraft zwischen dem Kraftfahrzeug 1 und der Straße beziehungsweise den einzelnen Reifen 18 und der Straße mit den auftretenden Zentrifugalkräften für die Trajektorien können Grenzgeschwindigkeiten bestimmt werden, für die die Reibkraft und die Zentrifugalkraft gleich ist. Vorteilhaft können jedoch auch zusätzliche Beschleunigungen durch ein Beschleunigen oder Bremsen des Kraftfahrzeugs bei diesem Vergleich mit berücksichtigt werden. Der Betrag der Vektorsumme von Längs- und Querbeschleunigung des Kraftfahrzeugs multipliziert mit dessen Masse darf dabei die Reibkraft nicht überseigen. Dies entspricht dem Prinzip des Kammschen Kreises. Typischerweise wird ein Höchstgeschwindigkeitsprofil für eine Trajektorie bestimmt, wobei bei der Bestimmung des Höchstgeschwindigkeitsprofils insbesondere Sicherheitsabstände zwischen den durch die Trajektorie auf das Kraftfahrzeug wirkende Beschleunigungskräften und der Reibkraft vorgesehen werden.

Als Ergebnis liegt im Fahrerassistenzsystem 2 eine Vielzahl von fahrbaren Trajektorien vor, die jeweils eine Ortskurve und ein der Ortskurve zugeordnetes Geschwindigkeitsprofil aufweisen. Aus den so ermittelten Trajektorien kann auf vielfältige Weise ermittelt werden, ob eine kritische Fahrsituation vorliegt. So können Trajektorien, die gewisse Grenzbedingungen, insbesondere eine Anfangsgeschwindigkeit, die kleiner ist als die momentane Geschwindigkeit des Kraftfahrzeugs 1, nicht erfüllen, verworfen werden und anschließend die Zahl der Trajektorien, die ermittelt wurden, beziehungsweise der Wertebereich wenigstens eines Parameters einer Trajektorienschar ermittelt werden.

Ist eine Fahrsituation unkritisch, so ist stets eine Vielzahl von Trajektorien für das Kraftfahrzeug möglich. Je näher sich das Kraftfahrzeug am Rand eines Komfortbereichs beziehungsweise eines physikalischen Grenzbereichs bewegt, desto weniger Trajektorien sind für eine Fahrt innerhalb des Komfortbereichs beziehungsweise innerhalb des physikalischen Grenzbereichs möglich. Damit kann die Zahl der ermittelten Trajektorien unter Berücksichtigung der entsprechenden Grenzbedingungen oder der Breite der Wertebereiche bei einer Ermittlung von parametrisierten Trajektorien genutzt werden um zu

ermitteln, ob eine kritische Fahrsituation vorliegt. Alternativ können aus den ermittelten Trajektorien jedoch Grenzwerte für wenigstens einen Ist-Parameter des Kraftfahrzeugs bestimmt werden. Im einfachsten Fall können für jede der Trajektorien die Geschwindigkeitswerte am Startpunkt ausgewertet werden und eine obere Grenze für die Geschwindigkeit des Kraftfahrzeugs 1 dadurch festgelegt werden, dass beispielsweise ein Geschwindigkeitswert genutzt wird, mit dem eine Mindestzahl der Trajektorien fahrbar ist, oder der einen gewissen Prozentsatz des Maximalwertes der Geschwindigkeit der schnellstmöglichen Trajektorie nicht überschreitet.

Da bei der Nutzung von Trajektorien zur Bestimmung des Vorliegens einer kritischen Fahrsituation und damit einer Umschaltbedingung bereits eine Vielzahl von Trajektorien vorliegt, ist es besonders einfach, eine Steuertrajektorie zu bestimmen, da diese aus den bereits berechneten fahrbaren Trajektorien ausgewählt werden kann. Wird bei der Berechnung der Trajektorien jedoch festgestellt, dass keine Trajektorie unter den vorgegebenen Grenzbedingungen möglich ist, so muss eine Notfalltrajektorie berechnet werden, wobei die Grenzbedingungen zur Berechnung der Trajektorien angepasst werden können.

Das Erfüllen der Umschaltbedingung und die Wahl einer Steuertrajektorie soll im Folgenden dargestellt werden. Bewegt sich Kraftfahrzeug 1 mit niedriger Geschwindigkeit, so sind alle Trajektorien zwischen den Begrenzungstrajektorien 22, 23 fahrbar. Die geometrische Form der berechneten Trajektorien ist nur durch die Vorgabe einer maximalen Wendepunktzahl beschränkt. Das Umschaltkriterium ist die Breite der Trajektorienschar am Scheitelpunkt der Kurve 26, also bei niedrigen Geschwindigkeiten der Abstand zwischen den Begrenzungstrajektorien 22 und 23 senkrecht zur Fahrtrichtung.

Bei höheren Geschwindigkeiten des Kraftfahrzeugs 1 werden einige der bei niedrigen Geschwindigkeiten fahrbaren Trajektorien nicht mehr fahrbar. Im physikalischen Grenzbereich sind nur noch eine oder mehrere diskrete Idealtrajektorien fahrbar. Mit zunehmender Geschwindigkeit verengt sich also die geometrische Breite der Trajektorienschar, bis nur noch die Idealtrajektorie

20 fahrbar ist. Unterschreitet die Breite einen vorgegebenen Grenzwert, so wechselt das Fahrerassistenzsystem in den zweiten Betriebsmodus und führt das Kraftfahrzeug 1 autonom entlang der Idealtrajektorie 20.

Nach dem Durchqueren der Kurve 26 ist wieder eine breite Trajektorienschar fahrbar. Damit kann das Fahrerassistenzsystem abhängig von der Verkehrssituation in den ersten Betriebsmodus wechseln.

Fig. 3 zeigt eine Verkehrssituation in der der Fahrbereich des Kraftfahrzeugs 1 durch weitere Kraftfahrzeuge 27, 29, die bewegte Hindernisse darstellen, beschränkt wird. Das Fahrerassistenzsystem 2 des Kraftfahrzeugs 1 berechnet für das Kraftfahrzeug 1 eine Zielposition 31, di4e auf der Sollroute des Kraftfahrzeugs liegt. Das Kraftfahrzeug 1 bewegt sich mit einer höheren Geschwindigkeit als das vor ihm fahrende Kraftfahrzeug 27. Bewegt sich das Kraftfahrzeug 1 trotz eines relativ geringen Abstands zu Kraftfahrzeug 27 weiterhin mit erhöhter Geschwindigkeit, so ist davon auszugehen, dass der Fahrer des Kraftfahrzeugs 1 das Kraftfahrzeug 27 überholen möchte. Das Fahrerassistenzsystem 2 muss in diesem Fall ermitteln, ob ein Überholen des Kraftfahrzeug 27 möglich ist und ob dies unter Umständen zu einer kritischen Fahrsituation führt. Durch die Nutzung der Sensorsysteme des Kraftfahrzeugs 1 und bekannte Algorithmen zur Bewegungsprädiktion können eine Trajektorie 28 für das Kraftfahrzeug 27 und eine Trajektorie 30 für das Kraftfahrzeug 29 vorausgesagt werden. Zur vereinfachten Darstellung soll davon ausgegangen werden, dass sich das Kraftfahrzeug 1 mit einer im wesentlichen unveränderten Geschwindigkeit weiterbewegt.

Bei einer Weiterbewegung mit gleicher Geschwindigkeit können die Bereiche 34 und 35 bestimmt werden, die von den Kraftfahrzeugen 27 beziehungsweise 29 überstrichen werden, bis das Kraftfahrzeug 1 das jeweilige Kraftfahrzeug passiert hat. Diese Bereiche 34, 35 müssen bei der Berechnung der Trajektorie des Kraftfahrzeugs 1 ausgeschlossen werden, um Kollisionen zu vermeiden. Hier ist anzumerken, dass eine komplexere Berechnung der Trajektorie des Kraftfahrzeugs 1 möglich ist, beispielsweise indem die Trajektorien in einem dreidimensionalen Raum aus zwei Ortskoordinaten einer

Zeitkoordinate geplant werden, wobei bewegte Hindernisse Teile dieses dreidimensionalen Raumes blockieren. Ein solches Verfahren erlaubt eine größere Anzahl von Trajektorien zu planen, was in einigen Fällen zu einem verbesserten Fahrverhalten führen kann, jedoch ist eine solche Berechnung wesentlich aufwendiger.

In Fig. 3 ist der Fahrbereich damit durch den Bereich der Straße sowie durch den Ausschluss der Bereiche 34 und 35, die von den Kraftfahrzeugen 27 und 29 überstrichen werden, definiert. Wird die zusätzliche Randbedingung an die geometrischen Bewegungskurven gestellt, dass der Lenkwinkel des Kraftfahrzeugs 1 begrenzt ist, so können die Begrenzungstrajektorien 32 und 33 ermittelt werden. Anschließend können zwischen den Trajektorien 32 und 33 weitere Zwischentrajektorien ermittelt und Geschwindigkeitsprofile bestimmt werden. Hierbei ist zu beachten, dass in diesem Fall weitere Grenzbedingungen an die Geschwindigkeitsprofile zu stellen sind, da ein wesentliches Abweichen der Geschwindigkeiten von den vorgegebenen Werten dazu führt, dass andere Bereiche 34 und 35 von den Kraftfahrzeugen 27 und 29 überstrichen würden. Im gezeigten Beispiel ist zwischen den Begrenzungstrajektorien 32 und 33 ein ausreichend breiter Fahrschlauch vorhanden. Bereits eine geringfügige Erhöhung der Geschwindigkeiten des Fahrzeugs 27 oder 29 könnte jedoch zu einer deutlichen Verringerung der Breite des Fahrschlauchs führen und damit dazu, dass nur noch eine geringe Zahl Trajektorien möglich wäre, wodurch eine kritische Situation festgestellt werden könnte. Im Falle einer kritischen Fahrsituation kann eine der vorbestimmten Trajektorien als Steuertrajektorie ausgewählt werden.

Ergänzend sei angemerkt, dass durch eine Variation der Geschwindigkeit des Kraftfahrzeugs 1 selbstverständlich weitere geometrische Fahrschläuche möglich sind beziehungsweise der gezeigte Fahrschlauch blockiert wird. So würde beispielsweise ein deutliches Verringern der Geschwindigkeit des Kraftfahrzeugs 1 dazu führen, dass der gezeigte Fahrschlauch nicht mehr befahrbar ist, jedoch ein neuer Fahrschlauch möglich wäre, der ein Verbleiben hinter Kraftfahrzeug 27 beschreibt, bis Punkt 31 erreicht ist.

Fig. 4 zeigt eine weitere Verkehrssituation, anhand der dargestellt wird, welchen Einfluss eine Sollroute auf die Bestimmung der möglichen Trajektorien beziehungsweise der Steuertrajektorie hat. In der gezeigten Verkehrssituation bewegt sich das Kraftfahrzeug 1 auf eine Einmündung zu, wobei ein entgegenkommendes Kraftfahrzeug 37 derart in die Einmündung 36 einbiegt, dass der gerade Fahrweg des Kraftfahrzeugs 1 blockiert ist. Die Einmündung mündet in eine Einbahnstraße, die von der Einmündung 36 wegführt. Damit führen beide Spuren der Straße 42 in die gleiche Fahrtrichtung. Das Fahrerassistenzsystem 2 des Kraftfahrzeugs 1 kann in der gezeigten Verkehrssituation getrennte Trajektorienscharen 39 und 41 bestimmen, wobei die Trajektorienschar 39 ein Einbiegen in die Straße 42 beschreibt und die Trajektorienschar 41 eine weitere Bewegung entlang der ursprünglichen Straße. Würde nun die Zielposition zur Bestimmung der Trajektorienscharen beliebig sein, so könnte sowohl die Zielposition 38 als auch die Zielposition 40 ermittelt werden. Würde in diesem Fall durch das Fahrerassistenzsystem des Kraftfahrzeugs 1 eine kritische Situation festgestellt, beispielsweise weil die Geschwindigkeit des Kraftfahrzeugs 1 relativ hoch ist, würde abhängig von den weiteren Bestimmungsparametern für eine Trajektorie entweder eine Trajektorie aus der Trajektorienschar 41 oder aus der Trajektorienschar 39 bestimmt. Damit wäre es möglich, dass das Fahrerassistenzsystem das Kraftfahrzeug autonom auf einen anderen Weg steuert als vom Fahrer gewünscht.

Um eine möglichst große Akzeptanz des Fahrerassistenzsystems zu erreichen, ist es jedoch vorteilhaft, wenn es soweit möglich eine autonome Steuerung des Kraftfahrzeugs derart vornimmt, dass sie vom Fahrer leicht akzeptiert wird, das heißt, dass sie vorzugsweise entlang einer Sollroute, die beispielsweise durch ein Navigationssystem geplant ist oder an einem gesetzten Blinker oder Ähnlichem erkannt wird, verläuft. Erkennt das Fahrerassistenzsystem 2 des Kraftfahrzeugs 1, dass eine nach rechts abbiegende Route geplant ist, so kann die Zielposition 38 bestimmt werden, verläuft die Sollroute jedoch geradeaus, so kann die Zielposition 40 bestimmt werden.

Beispielhaft soll davon ausgegangen werden, dass ein Abbiegen in die Straße 42 gewünscht ist. Damit wird also die Zielposition 38 bestimmt. Bei der Berechnung der fahrbaren Trajektorien kann nun zunächst ausschließlich die Trajektorienschar 39 bestimmt werden, da die Trajektorienschar 41 zwar fahrbar ist, jedoch nicht in die gewünschte Richtung führt. Wird nun bei der Auswertung der Trajektorienschar 39 durch das Fahrerassistenzsystem 2 des Kraftfahrzeugs 1 ermittelt, dass eine Umschaltbedingung erfüllt ist, also ein autonomes Fahren des Kraftfahrzeugs erfolgen soll, wird jedoch wenigstens eine Trajektorie ermittelt, auf der eine sichere Fahrt des Kraftfahrzeugs innerhalb der Trajektorienschar 39 möglich ist, so kann diese Trajektorie als Steuertrajektorie bestimmt und gefahren werden. Das Fahrerassistenzsystem 2 greift also minimal in den Fahrbetrieb des Kraftfahrzeugs 1 ein, so dass dem Fahrer zwar kurzzeitig die Führung des Kraftfahrzeugs abgenommen wird, die Führung des Kraftfahrzeugs aber zumindest im wesentlich weiterhin entlang einer vom Fahrer gewünschten Route erfolgt.

Abhängig von der Geschwindigkeit des Kraftfahrzeugs 1 und der weiteren Bewegung des Kraftfahrzeugs 37 kann es sein, dass keine Trajektorie der Trajektorienschar 39 durch das Kraftfahrzeugs 1 befahrbar ist. In diesem Fall kann die Steuereinrichtung 2 eine Randbedingung zur Berechnung der Trajektorien ändern oder aufheben. Im gezeigten Fall kann die Beschränkung der Wahl der Zielposition auf die Straße 42 aufgegeben werden, wodurch sowohl die Trajektorien der Trajektorienschar 39 als auch die Trajektorien der Trajektorienschar 41 berechenbar sind. Im beschriebenen Fall sind die Trajektorien der Trajektorienschar 39 jedoch aufgrund weiterer berücksichtigter Randbedingungen nicht fahrbar, wodurch in diesem Fall das Kraftfahrzeug entlang einer der Trajektorien der Trajektorienschar 41 zur Zielposition 40 geführt werden kann.

Durch das beschriebene Vorgehen kann das Fahrerassistenzsystem 2 des Kraftfahrzeugs 1 flexibel und abgestuft auf die gezeigte Verkehrssituation reagieren. Wird ermittelt, dass alle oder eine Vielzahl der Trajektorien der Trajektorienschar 39 unter den weiteren Randbedingungen fahrbar sind, so greift das Fahrerassistenzsystem 2 nicht in den Fahrbetrieb des Kraftfahr-

zeugs ein, da zunächst davon ausgegangen wird, dass der Fahrer des Kraftfahrzeugs kontrolliert entlang einer der möglichen Trajektorien steuern kann. Ist jedoch unter den weiteren Randbedingungen nur noch ein geringer Bruchteil der Trajektorien der Trajektorienschar 39 möglich, kann dies als eine kritische Fahrsituation interpretiert werden und das Kraftfahrzeug 1 kann autonom durch das Fahrerassistenzsystem 2 gesteuert werden. Die autonome Steuerung des Kraftfahrzeugs schließt zwar den Fahrer zumindest von der Steuerung des Kraftfahrzeugs aus, wobei die komplette Querführung oder die komplette Längs- und Querführung autonom durch das Kraftfahrzeug durchgeführt werden kann, bewegt das Kraftfahrzeug jedoch weiterhin entlang einer Route, die voraussichtlich den Routenwünschen des Fahrers entspricht. Die kurzfristigen Wünsche des Fahrers werden aus Sicherheitsgründen ignoriert, wobei mittelfristige Fahrziele weiterhin erreicht werden. Wird jedoch bei der Analyse der künftigen Fahrsituationen festgestellt, dass unter den weiteren gegebenen Randbedingungen alle Trajektorien der Trajektorienschar 39 des Kraftfahrzeugs 1 nicht sicher befahrbar sind, erfolgt eine Abweichung vom Fahrerwillen und eine Steuerung des Kraftfahrzeugs entlang einer nicht vom Fahrer gewünschten Route. Mit dieser Steuerung ist es weiterhin möglich, den Fahrbetrieb des Kraftfahrzeugs fortzusetzen, wodurch insbesondere ein Abstellen des Kraftfahrzeugs an einer nicht gewünschten Position verhindert wird. Kann auch nach Anpassung der Randbedingungen keine fahrbare Trajektorie ermittelt werden, so kann in einem dritten Betriebsmodus des Fahrerassistenzsystems 2 eine Notfalltrajektorie berechnet werden, um Kollisionen zu vermeiden oder Kollisionsfolgen zu vermindern.

Fig. 5 zeigt ein Beispiel für eine weitere Verkehrssituation, in der das Kraftfahrzeug 1 entlang einer Straße fährt, auf der beide Spuren von entgegenkommenden Fahrzeugen 43 und 44 blockiert sind. Da beide Spuren vor Kraftfahrzeug 1 blockiert sind, existiert kein durchgängiger Fahrbereich zwischen dem Kraftfahrzeug 1 und dem Bereich 51, in dem die Zielpositionen liegen, die durch eine Trajektorie des Kraftfahrzeugs 1 erreicht werden sollen, solange der Fahrbereich ausschließlich als die Fahrbahn definiert ist. Wird in diesem Fall versucht, fahrbare Trajektorien für das Kraftfahrzeug 1 zu

berechnen, so wird ermittelt, dass keine Trajektorie das Kraftfahrzeug 1 zu einer Zielposition im Bereich 51 führt. Die Steuereinrichtung muss somit eine Notfalltrajektorie bestimmen oder zumindest eine der Randbedingungen, die bei der Berechnung der fahrbaren Trajektorien benutzt werden, ändern. Diese Randbedingungen können beispielsweise maximale Beschleunigungen, maximale Bauteilbelastungen oder Ähnliches sein. Besonders vorteilhaft ist es jedoch häufig, einen Fahrbereich anzupassen. In der in Fig. 5 gezeigten Situation kann beispielsweise durch eine Kamera an Kraftfahrzeug 1 ermittelt werden, dass sich in den Bereichen 45 und 46, die neben der Fahrbahn liegen, keine Hindernisse befinden und dass die Oberfläche der Bereiche 45, 46 scheinbar befahrbar ist. Daher können in der gezeigten Situation, in der zunächst keine fahrbare Trajektorie ermittelt werden kann, die Bereiche 45 und 46 zum Fahrbereich hinzugenommen werden, wodurch Trajektorien innerhalb eines durch die Randtrajektorien 47 und 48 begrenzten Fahrschlauchs und innerhalb eines durch die Randtrajektorien 49 und 50 begrenzten Fahrschlauches möglich werden. Das Fahrerassistenzsystem 2 des Kraftfahrzeugs 1 kann nun unter Berücksichtigung weiterer Randbedingungen eine der Trajektorien innerhalb dieser Fahrschläuche auswählen und somit eine sichere Trajektorie zu einem Zielpunkt im Bereich 51 bestimmen.

Wie mit Bezug auf Fig. 1 erläutert wurde ist es auch möglich, dass das Kraftfahrzeug 1 erkennt, wenn ein Fahrer fahrunfähig ist. In diesen Fällen ist es wünschenswert, das Kraftfahrzeug 1 zeitnah abzustellen, dennoch soll zunächst eine sichere Abstellposition erreicht werden. Dies ist dadurch möglich, dass das Fahrerassistenzsystem 2 in einem vierten Betriebsmodus betrieben wird, in dem eine autonome Steuerung des Kraftfahrzeugs bis zu der sicheren Abstellposition erfolgt.

In der in Fig. 6 gezeigten Situation bewegt sich das Kraftfahrzeug 1 zu dem Zeitpunkt, zu dem die Fahruntüchtigkeit des Fahrers festgestellt wird, auf einer Überholspur 52 einer Autobahn. Als sichere Abstellposition soll eine Position auf der Standspur 55 erreicht werden. Während der autonomen Fahrt des Kraftfahrzeugs ist es damit notwendig, die mittlere Spur 53 sowie die rechte Spur 54 zu überqueren. Auf der mittleren Spur 53 bewegen sich

die Kraftfahrzeuge 56 und 57, auf der rechten Spur 54 die Kraftfahrzeuge 58, 59, 60. Damit ist eine typische Fahrsituation auf Autobahnen gezeigt, bei der auf der rechten Spur 54 und der mittleren Spur 53 die Verkehrsdichte hoch ist. In solchen Fällen können lange Zeiträume notwendig sein, um ein Kraftfahrzeug 1 auf die Standspur 55 zu bewegen.

Um ein schnelleres Abstellen des Kraftfahrzeugs 1 in dieser Situation zu ermöglichen, kann das Fahrerassistenzsystem 2 eine Kommunikationseinrichtung 6 des Kraftfahrzeugs 1 ansteuern, um Sollfahrmanöver an die Kraftfahrzeuge 56, 57, 58, 59 und 60 zu übermitteln. Mit dem Sollfahrmanöver kann insbesondere eine Prioritätsinformation übertragen werden die anzeigt, dass sich das Kraftfahrzeug 1 in einer Notsituation befindet, wodurch veranlasst wird, dass die Kraftfahrzeuge 56, 57, 58, 59 und 60 dem übertragenen Sollfahrmanöver soweit möglich folgen.

Fig. 7 zeigt die grundlegende Struktur eines Verfahrens zur Steuerung eines Kraftfahrzeugs. Im normalen Fahrbetrieb des Kraftfahrzeugs, das heißt während das Kraftfahrzeug vom Fahrer geführt beziehungsweise derart von Fahrerassistenzsystemen geführt wird, dass der Fahrer jederzeit die Steuereingriffe der Fahrerassistenzsysteme übersteuern kann, werden im Schritt S1 kontinuierlich Egodaten und Umfelddaten erfasst. Dabei können eine Vielzahl von Informationen über die Fahrbahn und das Umfeld der Fahrbahn, insbesondere Fahrbahnneigungen, Steigungen, Kurvenradien, Fahrbahnbreiten sowie Informationen, die Rückschlüsse auf die Reibungskoeffizienten der Straße ermöglichen, erfasst werden. Diese Daten können nach Bestimmung der Position des Kraftfahrzeugs lokalen Datenbanken oder Datenbanken, auf die drahtlos zugegriffen wird, entnommen werden. Insbesondere kann die Datenbank eines Navigationssystems genutzt werden. Daneben können gespeicherte oder durch im Kraftfahrzeug angeordnete Sensoren erfasste Egodaten des Kraftfahrzeugs erfasst werden. Auch die Daten von bewegten Hindernissen, insbesondere von weiteren Kraftfahrzeugen oder Fußgängern können erfasst werden, wobei künftige Bewegungen von bewegten Hindernissen durch ein Bewegungsmodell abgebildet werden.

Aus den in Schritt S1 gesammelten und bestimmten Daten werden im Schritt S2 für eines vorgegebenen Zeitintervalls zukünftige Fahrsituationen des Kraftfahrzeugs bestimmt. Für die Bestimmung der zukünftigen Fahrsituationen werden mehrere mögliche Trajektorien für das Kraftfahrzeug berechnet.

In Schritt S3 wird überprüft, ob eine Umschaltbedingung erfüllt ist. Die Umschaltbedingung hängt zumindest von den zuköünftigen Fahrsituationen ab. So kann erkannt werden, dass sich das Kraftfahrzeug zukünftig nahe an einem physikalischen Grenzbereich bewegen wird. Alternativ kann erkannt werden, dass eine Führung des Kraftfahrzeugs in zukünftigen Fahrsituationen nur derart möglich ist, dass sie am Rand eines Komfortbereichs eines Fahrers liegt. Die Umschaltbedingung ist von Fahrsituationen und optional von einer Eigenschaft des Fahrers abhängig. Ist eine solche Umschaltbedingung in Schritt S3 nicht erfüllt, wird das Verfahren ab Schritt S1 wiederholt.

Wird die Umschaltbedingung in Schritt S3 jedoch erfüllt, so erfolgt ein temporäres Umschalten in den zweiten Betriebsmodus des Fahrerassistenzsystems. In diesem zweiten Betriebsmodus wird das Kraftfahrzeug autonom, das heißt ohne Eingriffsmöglichkeit des Fahrers, gelenkt. Die Steuerung des Kraftfahrzeugs erfolgt so, dass der Fahrbetrieb soweit wie möglich fortgesetzt wird, das heißt, dass das Kraftfahrzeug zumindest solange weiter bewegt wird, bis eine kritische Situation überwunden ist. Während des autonomen Fahrens wird in Schritt S5 geprüft, ob eine Rückschaltbedingung zum Rückschalten in den ersten Betriebsmodus erfüllt ist. Eine Rückschaltbedingung ist, dass die Umschaltbedingung nicht erfüllt ist, das heißt, dass die kritische Fahrsituation überwunden ist, und dass die Umfeld- und Egodaten des Kraftfahrzeugs anzeigen, dass eine sichere Rückübergabe der Fahrzeugführung an den Fahrer möglich ist. Ist die Rückschaltbedingung nicht erfüllt, wird der autonome Fahrbetrieb in Schritt S4 fortgesetzt. Falls die Rückschaltbedingung erfüllt ist, erfolgt die weitere Fahrt des Kraftfahrzeugs wieder unter der Führung des Fahrers. Dabei wird ein nicht gezeigter zusätzlichen Schritt eingeführt, in dem eine Rückübernahmeaufforderung an den Fahrer ausgegeben wird und erst nach Erkennen einer Fahreraktion, die eine

Rückübernahme anzeigt, die Führung des Kraftfahrzeugs an den Fahrer zurückgegeben wird.

Fig. 8 zeigt ein weiteres Ausführungsbeispiel eines Verfahrens zur Steuerung eines Kraftfahrzeugs. Wie für den Fachmann offensichtlich erkennbar, sind einige der gezeigten Schritte optional und stellen vorteilhafte Ausprägungen des Verfahrens dar.

Wie bereits zu Fig. 7 beschrieben wurde, erfolgt der Betrieb des Kraftfahrzeugs auch beim in Fig. 8 gezeigten Verfahren typischerweise so, dass das Kraftfahrzeug durch den Fahrer geführt ist. Während dieses Betriebs wird in Schritt S11, wie zu Schritt S1 der Fig. 7 erläutert wurde, eine Vielzahl von Ego- und Umfelddaten gesammelt, sowie Bewegungsmodelle für bewegte Hindernisse erstellt und ausgewertet. Im Schritt S12 wird aus den in Schritt S11 ermittelten Daten ein Fahrbereich zwischen der Ist-Position des Kraftfahrzeugs und dem Bereich, in dem eine oder mehrere Zielpositionen liegen, ermittelt. Der Fahrbereich umfasst die gesamte Fahrbahn oder bestimmte Spuren der Fahrbahn, wobei Bereiche ausgenommen sind, die durch feste oder bewegte Hindernisse blockiert sind.

In Schritt S13 wird eine Vielzahl von Trajektorien in dem in Schritt S12 bestimmten Bereich bestimmt. Die Bestimmung der Trajektorien erfolgt unter Auswertung bestimmter Randbedingungen, die sich aus den Ego- und Umfelddaten ergeben und insbesondere die Trajektorien auf den Fahrbereicheinschränken, berechnet. Weitere Randbedingungen zur Berechnung der Trajektorien können beispielsweise maximale Beschleunigungen für das Kraftfahrzeug sein, die sich aus einer Reibungskraft zwischen Straße und Reifen ergeben. Ergänzend ist es auch möglich, bei der Bestimmung der Grenzbedingungen Eigenschaften des Fahrers zu berücksichtigen. Beispielsweise ist es möglich, dass ein Fahrer vor Fahrtantritt ein sportliches oder komfortables Fahrverhalten des Kraftfahrzeugs eingestellt hat. Entsprechend dieser Einstellung kann auch der mögliche Parameterbereich der Trajektorien eingeschränkt werden. Die Berechnung der Trajektorien kann zunächst durch ein reines Berechnen von Ortskurven und ein anschließendes

Bestimmen von Geschwindigkeitsprofilen entlang dieser Ortskurven erfolgen, es können jedoch auch Trajektorien berechnet werden, die bereits Orte und Geschwindigkeiten beziehungsweise Orte und Zeiten umfassen und die zudem weitere Parameter umfassen können. Trajektorien werden einzeln oder als parametrisierte Trajektorienscharen mit zugeordneten Wertebereichen für die Parameter berechnet.

In Schritt S14 können einzelne Trajektorien verworfen beziehungsweise Wertebereiche von Trajektorienscharen ausgeschlossen werden, die gewisse zusätzliche Randbedingungen nicht erfüllen. Insbesondere wenn in Schritt S13 aufwändige Berechnungsverfahren für die Trajektorien benutzt werden, die eine Vielzahl von Parametern berücksichtigen, ist es häufig vorteilhaft zunächst einige Randbedingungen nicht anzuwenden und Trajektorien, die diese Randbedingungen nicht erfüllen, anschließend in Schritt S14 auf der Menge der berechneten Trajektorien zu entfernen. Es ist jedoch auch möglich, dass zunächst in Schritt S13 Trajektorien unter relativ weiten Randbedingungen, beispielsweise der Randbedingung, dass die Trajektorie physikalisch fahrbar ist, berechnet werden und in Schritt S14 engere Randbedingungen genutzt werden, beispielsweise, dass eine Trajektorie innerhalb eines Komfortbereichs eines Fahrers fahrbar ist. Damit kann eine Obermenge und eine Untermenge von Trajektorien gebildet werden, wobei zunächst versucht wird, das Kraftfahrzeug innerhalb der Untermenge der Trajektorien zu bewegen, wobei es möglich ist, den Trajektorienraum falls notwendig auf die Obermenge zu erweitern.

In Schritt S15 wird überprüft, ob ein Umschaltkriterium durch die Schritte S13 und S14 bestimmten Trajektorien erfüllt ist. Ein solches Umschaltkriterium kann insbesondere die Breite von Fahrschläuchen oder die Menge der Trajektorien betreffen. Im einfachsten Fall kann die Anzahl der berechneten Trajektorien mit einem Grenzwert verglichen werden. Dies ist insbesondere möglich, wenn die Parameter der Trajektorien zuvor diskretisiert wurden, das heißt kontinuierliche Trajektorienscharen durch eine Mehrzahl von Einzeltrajektorien dargestellt werden, die im Parameterraum beabstandet sind. Dadurch werden also jeweils eine gewisse Menge nahe beieinanderliegender

Trajektorien als äquivalent betrachtet und durch eine einzelne Trajektorie repräsentiert. Alternativ ist es jedoch möglich, dass in Schritt S13 bis S14 Trajektorienscharen, das heißt insbesondere parametrisierte Fahrschläuche, berechnet wurden, wobei in diesem Fall die Wertbreite eines Parameters oder mehrerer Parameter betrachtet werden kann. Im einfachsten Fall kann hier die geometrische Weite der breitesten Trajektorie am engsten Punkt untersucht werden. Wenn mehrere Trajektorien vorliegen, können die einzelnen Breiten der Wertebereiche jedoch auch summiert werden oder es können Phasenraumvolumen für die Trajektorienscharen bestimmt und einzeln betrachtet oder summiert werden.

Ist die Umschaltbedingung in Schritt S15 nicht erfüllt, wird in Schritt S16 zudem überprüft, ob eine Fahruntüchtigkeit des Fahrers vorliegt. Hierzu können Kameradaten oder die Lenkbewegungen des Fahrers ausgewertet werden. Anhand der gewonnenen Daten kann Bewußtlosigkeit oder Müdigkeit des Fahrers erkannt werden. Wird in Schritt S16 keine Fahrunfähigkeit des Fahrers festgestellt, wird das Verfahren ab Schritt S11 fortgesetzt, wodurch die Fahrzeugführung beim Fahrer verbleibt.

Wird eine Fahrunfähigkeit des Fahrers festgestellt, so schaltet das Fahrerassistenzsystem in den vierten Betriebsmodus und in Schritt S17 wird ein autonomer Fahrbetrieb zu einer sicheren Abstellposition eingeleitet. In diesem Schritt ist es zudem möglich, dass bei bewußtlosem oder anderweitig krankem Fahrer ein Notruf abgesetzt wird, Sollfahrmanöver an andere Fahrzeuge gegeben werden, um ein sicheres Abstellen des Kraftfahrzeugs zu ermöglichen oder Ähnliches. Mit Erreichen einer sicheren Abstellposition wird das Kraftfahrzeug in Schritt S18 abgestellt. Damit endet das Verfahren in diesem Fall.

Wird in Schritt S15 festgestellt, dass das Umschaltkriterium erfüllt ist, so schaltet das Fahrerassistenzsystem in den zweiten Betriebsmodus und in Schritt S19 wird ermittelt, ob zumindest eine Trajektorie ermittelt werden konnte, also ob eine sichere Fahrt des Kraftfahrzeugs überhaupt möglich ist. Ist dies der Fall, so kann im Schritt S20 eine Warnung an weitere Kraftfahr-

zeuge ausgegeben werden, dass das Kraftfahrzeug, da im Schritt S15 bereits ein Umschaltkriterium festgestellt wurde, voraussichtlich in einem physikalischen Grenzbereich betrieben werden wird. Die Ausgabe einer Warnung in Schritt S20 kann dann entfallen, wenn die Umschaltbedingungen in Schritt S15 ausschließlich deshalb erfüllt wurde, weil das Kraftfahrzeug außerhalb des Komfortbereichs eines Fahrers bewegt wird, jedoch weiterhin ein ausreichend großer Abstand vom physikalischen Grenzbereich gewahrt ist. Zudem kann in Schritt S20 eine Hinweiseinrichtung aktiviert werden, um einen Fahrer auf die Aufnahme des autonomen Fahrbetriebs hinzuweisen.

Wurden in den Schritten S13 und S14 mehrere fahrbare Trajektorien ermittelt, so kann in Schritt S21 die Steuertrajektorie aus diesen Trajektorien ausgewählt werden. Wurde nur eine fahrbare Trajektorie ermittelt, so ist dies die ausgewählte Steuertrajektorie. Zur Auswahl der Trajektorie kann eine Vielzahl von Optimierungskriterien genutzt werden. Insbesondere kann ein Sicherheitsabstand zu Hindernissen und dem Fahrbahnrand optimiert werden. Gleichzeitig kann versucht werden, Längs- und/oder Querbeschleunigungen zu minimieren. Mit den Optimierungsbedingungen kann darauf abgezielt werden, eine möglichst sichere Fahrt des Kraftfahrzeugs zu ermöglichen, wobei die gefahrene Trajektorie gleichzeitig eine minimale Abweichung von einem prognostizierten Fahrerwillen aufweist.

In Schritt S22 erfolgt ein Fahrbetrieb entlang der in Schritt S21 ausgewählten Trajektorie, wozu das Fahrerassistenzsystem zumindest die Steuerung des Kraftfahrzeugs, insbesondere aber die gesamte Querführung oder die gesamte Längs- und Querführung des Kraftfahrzeugs, autonom durchführt. Hierbei kann die Trajektorie insbesondere aufgrund von neu ermittelten Umfeld- und Egodaten bei Bedarf angepasst werden.

In Schritt S23 wird überprüft, ob eine Rückschaltbedingung erfüllt ist. Dies erfolgt äquivalent zur Überprüfung der Rückschaltbedingungen in Schritt S5 der Fig. 7. Wird keine Rückschaltbedingung ermittelt, wird das autonome Fahren in Schritt S22 fortgesetzt. Bei Ermittlung der Rückschaltbedingungen erfolgt in Schritt S24 eine Rückgabe der Fahrzeugführung an den Fahrer,

wobei dies vielfältig ausgestaltbar ist. Insbesondere kann ein Hinweissignal an den Fahrer gegeben werden, dass eine Rückübergabe erfolgen soll. Eine Rückübergabe kann erst nach einer festgelegten Handlung durch den Fahrer erfolgen.

Nach der Rückübergabe in Schritt S24 schaltet das Fahrerassistenzsystem in den ersten Betriebsmodus, das Verfahren wird in Schritt S11 fortgesetzt und das Kraftfahrzeug wird wieder durch den Fahrer geführt.

Falls in Schritt S19 ermittelt wird, dass keine fahrbare Trajektorie für das Fahrzeug bestimmt werden konnte, wird in Schritt S25 eine Warnung an den Fahrer ausgegeben, da in diesem Fall davon ausgegangen wird, dass ein Unfall unvermeidbar ist oder dass das Kraftfahrzeug mit erweiterten Randbedingungen, also zumindest mit einer Verringerung des Fahrkomforts betrieben werden muss. Im Schritt S26 werden die Randbedingungen zur Bestimmung der Trajektorien angepasst. Wurden in Schritt S13 und S14 die Trajektorien zunächst derart bestimmt, dass die Fahrbahntrajektorien einen Komfortbereich des Fahrers beschreiben, ist es nun möglich die Randbedingungen auf einen physikalischen Grenzbereich zu erweitern. Es ist zudem möglich, dass der Fahrbereich erweitert wird. So können in Fällen, in denen neben einer Fahrbahn keine Hindernisse vorhanden sind, Bereiche neben der Fahrbahn nun zum Fahrbereich hinzugefügt werden.

Nach der Anpassung der Randbedingung wird in Schritt S27 versucht, eine optimale Trajektorie mit den angepassten Randbedingungen zu ermitteln. In Schritt S28 wird überprüft, ob zumindest eine mögliche Trajektorie in Schritt S27 ermittelt wurde. Ist dies nicht der Fall, so ist davon auszugehen, dass keine Trajektorie bestimmt werden kann, mit der eine Beschädigung von Personen, dem Kraftfahrzeug und/oder Drittgegenständen vollständig vermieden werden kann. Daher wechselt das Fahrerassistenzsystem in einen vierten Betriebsmodus und in Schritt S29 wird eine Notfalltrajektorie berechnet mit der Schäden soweit möglich minimiert werden. Die Berechnung von schadensminimierenden Trajektorien bei unvermeidbaren Unfällen ist im Stand der Technik bekannt. Diese Trajektorie kann in Schritt S30 durchge-

führt werden und endet typischerweise in Schritt S31 mit dem Stillstand des Kraftfahrzeugs. Da in diesem Fall davon auszugehen ist, dass eine Schadenssituation vorliegt, können in Schritt S31 auch bestimmte Fahrzeugsysteme abgeschaltet werden oder Notrufe abgesetzt werden.

Wird in Schritt S28 ermittelt, dass mit den angepassten Randbedingungen eine fahrbare Trajektorie vorliegt, so können in Schritt S32 vorbereitende Schritte durchgeführt werden, in denen beispielsweise Fahrzeugsysteme wie Fahrwerk oder Differentialsperre entsprechend angepasst werden. Anschließend kann die entsprechend Trajektorie in Schritt S33 durchgeführt werden. Da die Trajektorie typischerweise im Grenzbereich durchgeführt wird, wird in Schritt S34 überprüft, ob ein Problem, insbesondere eine Beschädigung des Kraftfahrzeugs oder eine unerwartete Fahrzeugbewegung aufgetreten ist. In diesem Fall kann mit Schritt S35 das Fahrzeug gezielt gestoppt werden, wodurch das Verfahren mit einem Stillstand des Fahrzeugs in Schritt S36 endet. Wird in Schritt S34 ermittelt, dass das Kraftfahrzeug kontrolliert entlang der Trajektorie geführt wird, kann in Schritt S37 überprüft werden, ob eine Rückschaltbedingung vorliegt. Falls diese nicht vorliegt, wird die Durchführung der Trajektorie in Schritt S33 fortgesetzt. Die Überprüfung der Rückgabebedingung entspricht Schritt S23. Liegt die Rückübergabebedingung vor, so kann in Schritt S38 ebenso wie in Schritt S24 eine Rückübergabe an den Fahrer erfolgen, worauf das Fahrerassistenzsystem in den ersten Betriebsmodus schaltet und das Verfahren in Schritt S11 mit dem normalen Fahrbetrieb fortgesetzt wird.

PATENTANSPRÜCHE

1. Kraftfahrzeug umfassend wenigstens ein Fahrerassistenzsystem (2) zur Vorausberechnung zukünftiger Fahrsituationen des Kraftfahrzeugs (1) für ein vorgegebenes Zeitintervall durch Auswertung von das Kraftfahrzeug (1) betreffenden Egodaten und das Kraftfahrzeugumfeld betreffenden Umfelddaten, wobei das Kraftfahrzeug (1) in einem ersten Betriebsmodus des Fahrerassistenzsystems (2) durch einen Fahrer steuerbar ist,
dadurch gekennzeichnet,
dass das Fahrerassistenzsystem (2) bei Erfüllung einer zumindest von den zukünftigen Fahrsituationen abhängenden Umschaltbedingung zum temporären Umschalten in einen zweiten Betriebsmodus, in dem die Steuerung des Kraftfahrzeugs (1) ohne Eingriffsmöglichkeit durch den Fahrer autonom durch das Fahrerassistenzsystem (2) erfolgt, ausgebildet ist, wobei im zweiten Betriebsmodus der Fahrbetrieb fortgesetzt wird, wobei das Fahrerassistenzsystem (2) dazu ausgebildet ist, im zweiten Betriebsmodus eine Prognose, ob an einem in Fahrtrichtung voraus liegenden Wegpunkt die Umschaltbedingung erfüllt ist, zu berechnen und eine Zielposition (31, 41, 42) für den autonomen Fahrbetrieb zu bestimmen, an der die Umschaltbedingung voraussichtlich nicht erfüllt ist.

2. Kraftfahrzeug nach Anspruch 1,
dadurch gekennzeichnet,
dass das Fahrerassistenzsystem (2) zur Auswertung von Egodaten, insbesondere von Routendaten eines Navigationssystems (4), und Umfelddaten zur Bestimmung einer vom Fahrer gewünschten Sollroute des Kraftfahrzeugs ausgebildet ist, wobei die Zielposition (31, 41, 42) auf der Sollroute liegt.

3. Kraftfahrzeug nach Anspruch 1 oder 2,
dadurch gekennzeichnet,

dass das Fahrerassistenzsystem (2) derart zur Bestimmung der Zielposition (31, 41, 42) ausgebildet ist, dass an der Zielposition (31, 41, 42) die prognostizierte Verkehrssituation und/oder ein Streckenverlauf eine sichere Rückübergabe der Fahrzeugführung an den Fahrer erlaubt.

4. Kraftfahrzeug nach einem der vorangehenden Ansprüche,
dadurch gekennzeichnet,
dass das Fahrerassistenzsystem (2) zum Umschalten vom zweiten in den ersten Betriebsmodus bei Vorliegen wenigstens einer Rückschaltbedingung ausgebildet ist, wobei die oder eine der Rückschaltbedingungen ist, dass die Umschaltbedingung nicht erfüllt ist und/oder dass die Verkehrssituation eine sichere Rückgabe der Fahrzeugkontrolle an den Fahrer erlaubt und/oder dass die Zielposition (31, 41, 42) erreicht ist.

5. Kraftfahrzeug nach einem der vorangehenden Ansprüche ,
dadurch gekennzeichnet,
dass das Fahrerassistenzsystem (2) zur Bestimmung einer Steuertrajektorie zwischen der momentanen Position des Kraftfahrzeugs (1) und der Zielposition (31, 41, 42) und zur Steuerung des Kraftfahrzeugs (1) entlang der Steuertrajektorie im zweiten Betriebsmodus ausgebildet ist.

6. Kraftfahrzeug nach einem der vorangehenden Ansprüche,
dadurch gekennzeichnet,
dass das Fahrerassistenzsystem (2) im zweiten Betriebsmodus zur autonomen Steuerung der Bremssysteme (10) und/oder des Motors (11) und/oder der Lenkung (8) und/oder des vorzugsweise automatischen Getriebes (12) des Kraftfahrzeugs ohne Eingriffsmöglichkeit durch den Fahrer ausgebildet ist.

7. Kraftfahrzeug nach einem der vorangehenden Ansprüche,
dadurch gekennzeichnet,
dass das Fahrerassistenzsystem (2) zur Berechnung von mehreren von der momentanen Position des Kraftfahrzeugs (1) ausgehenden fahrba-

ren Trajektorien mit wenigstens einer aus Egodaten und/oder Umfelddaten bestimmten Randbedingung ausgebildet ist und dass die Umschaltbedingung zum Auswerten der fahrbaren Trajektorien ausgebildet ist.

8. Kraftfahrzeug nach Anspruch 7,
dadurch gekennzeichnet,
dass das Fahrerassistenzsystem (2) zur Bestimmung wenigstens eines an der Position des Kraftfahrzeugs (1) beginnenden Fahrbereichs, der durch das Kraftfahrzeug (1) befahrbar ist, ausgebildet ist, wobei die Randbedingung oder eine der Randbedingungen ist, dass die Trajektorien vollständig innerhalb des Fahrbereichs verlaufen.

9. Kraftfahrzeug nach Anspruch 8,
dadurch gekennzeichnet,
dass das Fahrerassistenzsystem (2) zu der Berechnung der fahrbaren Trajektorien als wenigstens eine parametrisierte Trajektorienschar aus einer Vielzahl von fahrbaren Trajektorien und/oder als mehrere einzelne fahrbare Trajektorien, die durch einen vorgegebenen oder anpassbaren Abstand ihrer Parameter, insbesondere der Ortskoordinaten, beabstandet sind, ausgebildet ist.

10. Kraftfahrzeug nach einem der Ansprüche 7 bis 9,
dadurch gekennzeichnet,
dass das Fahrerassistenzsystem (2) zur Bestimmung wenigstens eines Geschwindigkeitsprofils für jede der fahrbaren Trajektorien ausgebildet ist.

11. Kraftfahrzeug nach einem der Ansprüche 7 bis 10,
dadurch gekennzeichnet,
dass das Fahrerassistenzsystem zur Bestimmung eines Grenzwertes für einen Fahrzeugparameter aus den fahrbaren Trajektorien ausgebildet ist und die Umschaltbedingung oder eine der Umschaltbedingungen das Über- oder Unterschreiten des Grenzwertes ist.

12. Kraftfahrzeug nach einem der Ansprüche 7 bis 11,
dadurch gekennzeichnet,
dass die Umschaltbedingung oder eine der Umschaltbedingungen ein Unterschreiten eines Minimalwerts für die Anzahl der fahrbaren Trajektorien oder einer Breite eines Wertebereichs wenigstens eines Parameters, der eine Trajektorienschar der fahrbaren Trajektorien parametrisiert, ist.

13. Kraftfahrzeug nach einem der Ansprüche 7 bis 12,
dadurch gekennzeichnet,
dass das Fahrerassistenzsystem (2) dazu ausgebildet ist, in dem Fall, wenn keine fahrbare Trajektorie ermittelt werden kann, wenigstens eine Randbedingung anzupassen und fahrbare Trajektorien erneut zu berechnen.

14. Kraftfahrzeug nach einem der Ansprüche 7 bis 13,
dadurch gekennzeichnet,
dass das Fahrerassistenzsystem (2) dazu ausgebildet ist, in dem Fall, wenn, insbesondere nach Anpassen der Randbedingung, keine fahrbare Trajektorie ermittelt werden kann, in einen dritten Betriebsmodus umzuschlaten, in dem eine Notfalltrajektorie bestimmt wird.

15. Kraftfahrzeug nach einem der vorangehenden Ansprüche,
dadurch gekennzeichnet,
dass das Fahrerassistenzsystem (2) zum Ansteuern einer Hinweiseinrichtung (15) zur Gabe eines akustischen, haptischen und/oder optischen Hinweises beim Umschalten in den zweiten Betriebsmodus und/oder vor Umschalten in den ersten Betriebsmodus, als Hinweis zur Fahrerübernahme, ausgebildet ist.

16. Kraftfahrzeug nach einem der vorangehenden Ansprüche,
dadurch gekennzeichnet,

dass es eine Kommunikationseinrichtung (6) zur drahtlosen Fahrzeug-zu-Fahrzeugkommunikation und/oder zur drahtlosen Fahrzeug-zu-Infrastrukturkommunikation aufweist, wobei das Fahrassistenzsystem (2) zur Ermittlung von Umgebungsdaten durch Ansteuerung der Kommunikationseinrichtung (15) zur Kommunikation mit Informationsquellen und/oder zur Kommunikation mit anderen Kraftfahrzeugen (27, 29, 37, 43, 44, 56, 57, 58, 59, 60) zur Übertragung von Warnhinweisen, insbesondere beim Umschalten in den zweiten Betriebsmodus, ausgebildet ist.

17. Kraftfahrzeug nach einem der vorangehenden Ansprüche,
dadurch gekennzeichnet,
dass das Fahrerassistenzsystem (2) in einem vierten Betriebsmodus zur autonomen Steuerung der Lenkung (8) und/oder der Bremssysteme (10) und/oder des Motors (11) und/oder des insbesondere automatischen Getriebes (12) des Kraftfahrzeugs (1) ohne Eingriffsmöglichkeit durch den Fahrer ausgebildet ist, und das Kraftfahrzeug (1) in eine sichere Abstellposition verbracht wird.

18. Kraftfahrzeug nach Anspruch 17,
dadurch gekennzeichnet,
dass es ein Fahrerzustandserfassungsmittel (17) zur Erfassung eines Fahrerzustands umfasst und das Fahrerassistenzsystem (2) bei Ermittlung eines Fahrerzustandes, der eine Fahruntüchtigkeit des Fahrers anzeigt, zum Umschalten in den vierten Betriebsmodus ausgebildet ist.

19. Kraftfahrzeug nach einem der Ansprüche 17 oder 18,
dadurch gekennzeichnet,
dass das Fahrerassistenzsystem (2) bei einem Umschalten vom zweiten Betriebsmodus in den ersten Betriebsmodus zum Warten auf eine Eingabe eines Fahrers zur Fahrerübernahme und bei Nichterfolgen dieser Eingabe innerhalb eines vorgegebenen Zeitintervalls zum Umschallten in den vierten Betriebsmodus ausgebildet ist.

20. Kraftfahrzeug nach einem der Ansprüche 17 bis 19,
dadurch gekennzeichnet,
dass das Fahrerassistenzsystem (2) dazu ausgebildet ist, bei Ermittlung einer vorgegebenen Mindestzahl und/oder bei Ermittlung einer vorgegebenen Mindesthäufigkeit von Umschaltungen vom ersten in den zweiten Betriebsmodus innerhalb eines vorgegebenen Zeitraums in den vierten Betriebsmodus umzuschalten.

21. Kraftfahrzeug nach einem der Ansprüche 17 bis 20,
dadurch gekennzeichnet,
dass das Kraftfahrzeug (1) eine Kommunikationseinrichtung (6) umfasst und das Fahrerassistenzsystem (2) im vierten Betriebsmodus zur Ermittlung eines Sollfahrmanövers für wenigstens ein weiteres Kraftfahrzeug (27, 29, 37, 43, 44, 56, 57, 58, 59, 60) und zur Ansteuerung der Kommunikationseinrichtung (6) zur Übertragung des Sollfahrmanövers an das Kraftfahrzeug (27, 29, 37, 43, 44, 56, 57, 58, 59, 60) ausgebildet ist, wobei insbesondere zusätzlich zum Sollfahrmanöver eine Prioritätsinformation übertragbar ist.

22. Kraftfahrzeug nach einem der vorangehenden Ansprüche,
dadurch gekennzeichnet,
dass die Umschaltbedingung und/oder die Randbedingung zur Berechnung der fahrbaren Trajektorien und/oder die Bestimmung der Steuertrajektorie von einer vorgegebenen oder durch das Fahrerassistenzsystem (2) ermittelten Eigenschaft des Fahrers abhängig ist.

23. Verfahren zur Steuerung eines Kraftfahrzeugs, umfassend wenigstens ein Fahrerassistenzsystem und wenigstens ein Erfassungsmittel, wobei das Kraftfahrzeug in einem ersten Betriebsmodus des Fahrerassistenzsystems durch einen Fahrer steuerbar ist, umfassend die Schritte:
- Erfassen von das Kraftfahrzeug betreffenden Egodaten und das Kraftfahrzeugumfeld betreffenden Umfelddaten durch das Erfassungsmittel,

- Vorausberechnen zukünftiger Fahrsituationen des Kraftfahrzeugs durch Auswertung der Egodaten und der Umfelddaten durch das Fahrerassistenzsystem,
- Überprüfen, ob eine zumindest von den zukünftigen Fahrsituationen abhängige Umschaltbedingung erfüllt ist, durch das Fahrerassistenzsystem,
- temporäreres Umschalten in den zweiten Betriebsmodus des Fahrerassistenzsystems, falls die Umschaltbedingung erfüllt ist,
- autonomes Steuern des Kraftfahrzeugs ohne Eingriffsmöglichkeit des Fahrers zur Fortsetzung des Fahrbetriebs durch das Fahrerassistenzsystem im zweiten Betriebsmodus, wobei durch das Fahrerassistenzsystem im zweiten Betriebsmodus eine Prognose berechnet wird, ob an einem in Fahrtrichtung voraus liegenden Wegpunkt die Umschaltbedingung erfüllt ist, und eine Zielposition für den automatischen Fahrbetrieb bestimmt wird, an der die Umschaltbedingung voraussichtlich nicht erfüllt ist.

FIG. 1

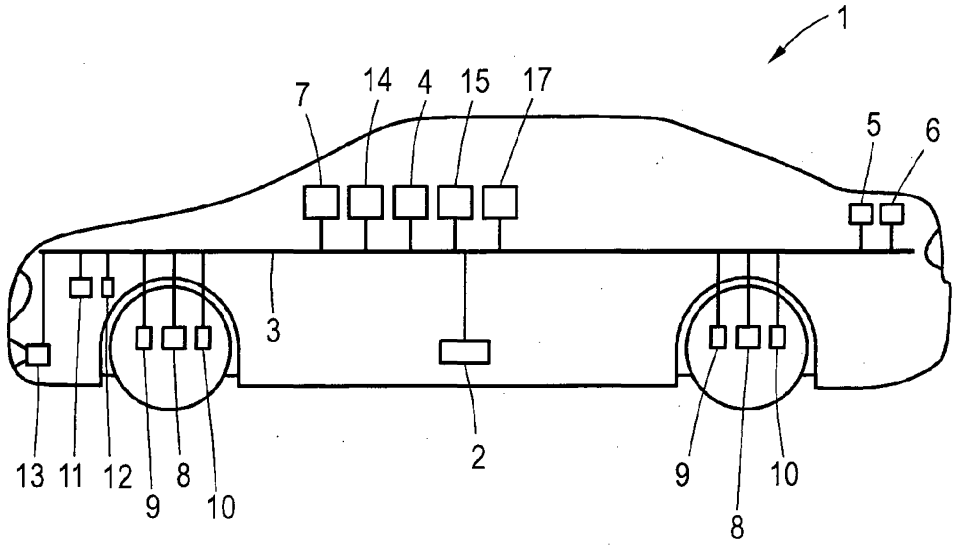

FIG. 2

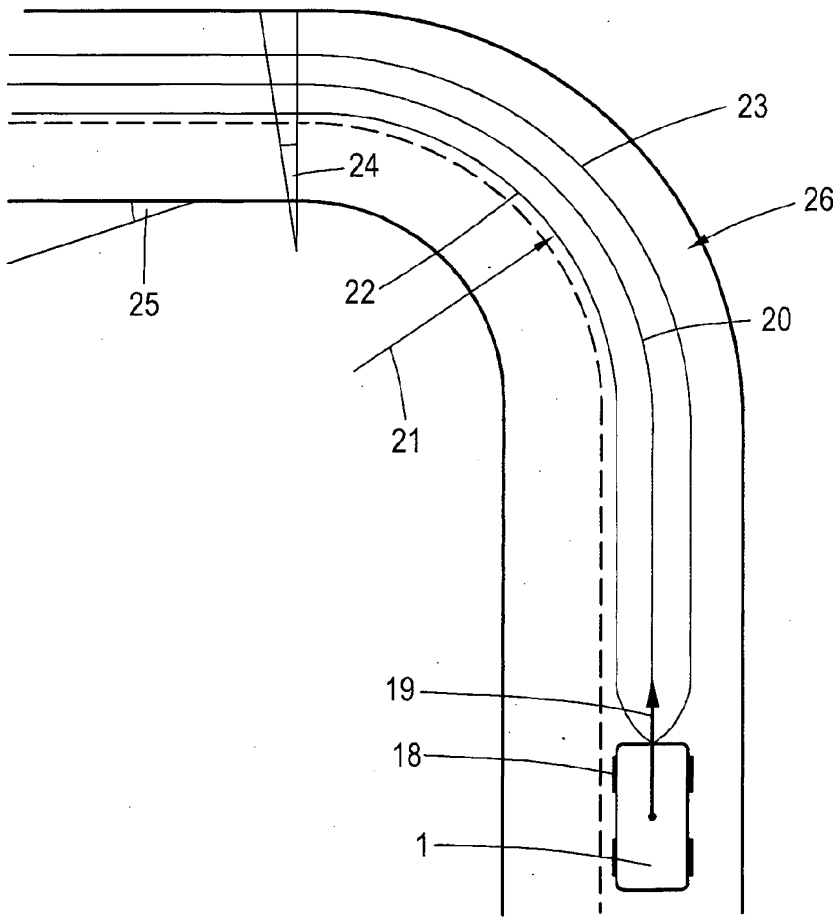

FIG. 3

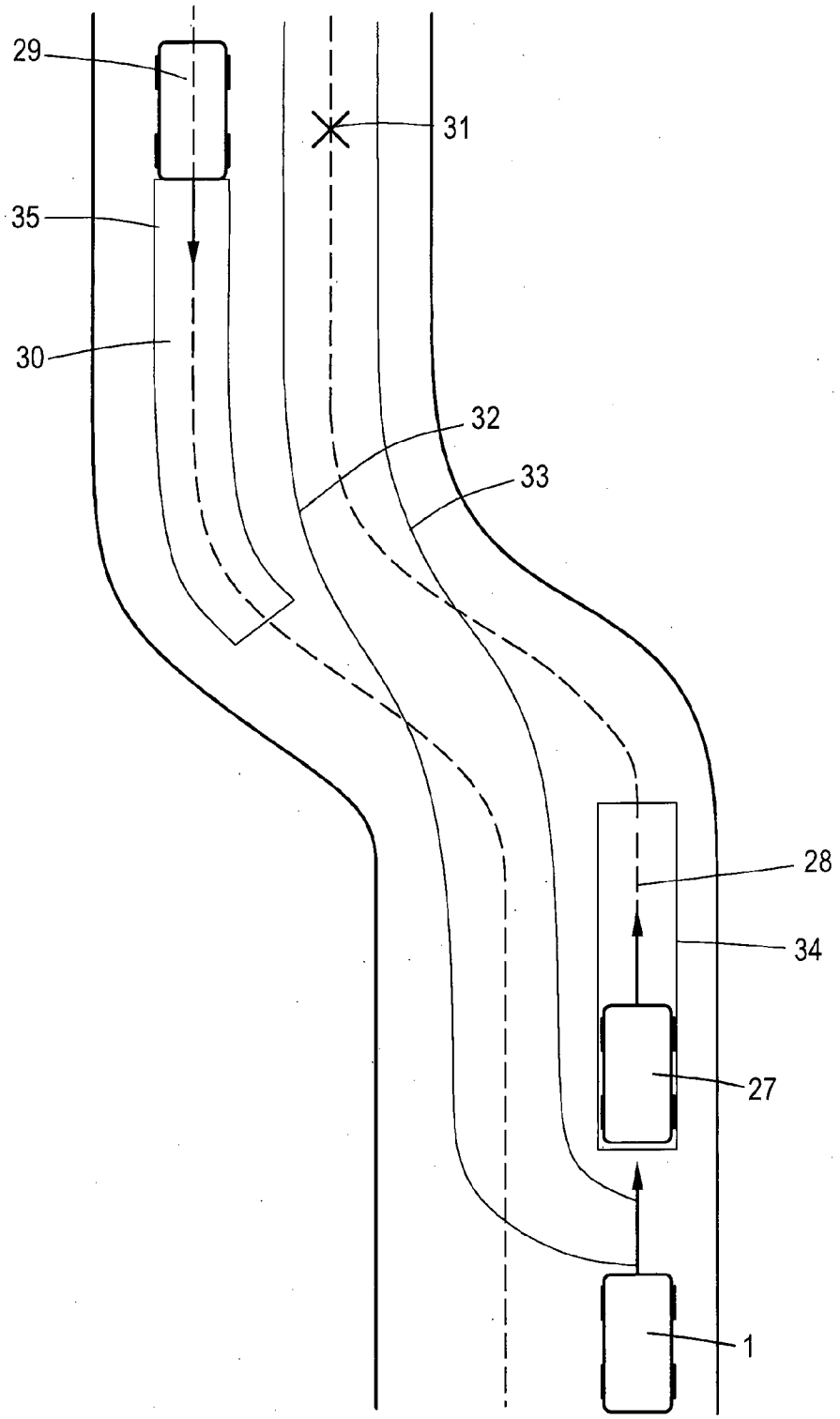

FIG. 4

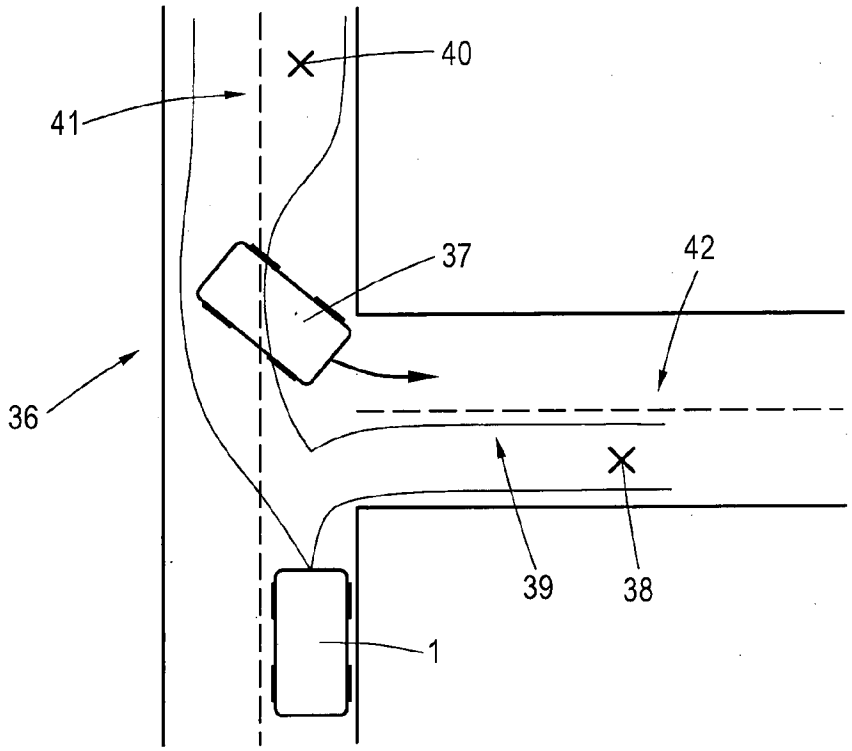

FIG. 5

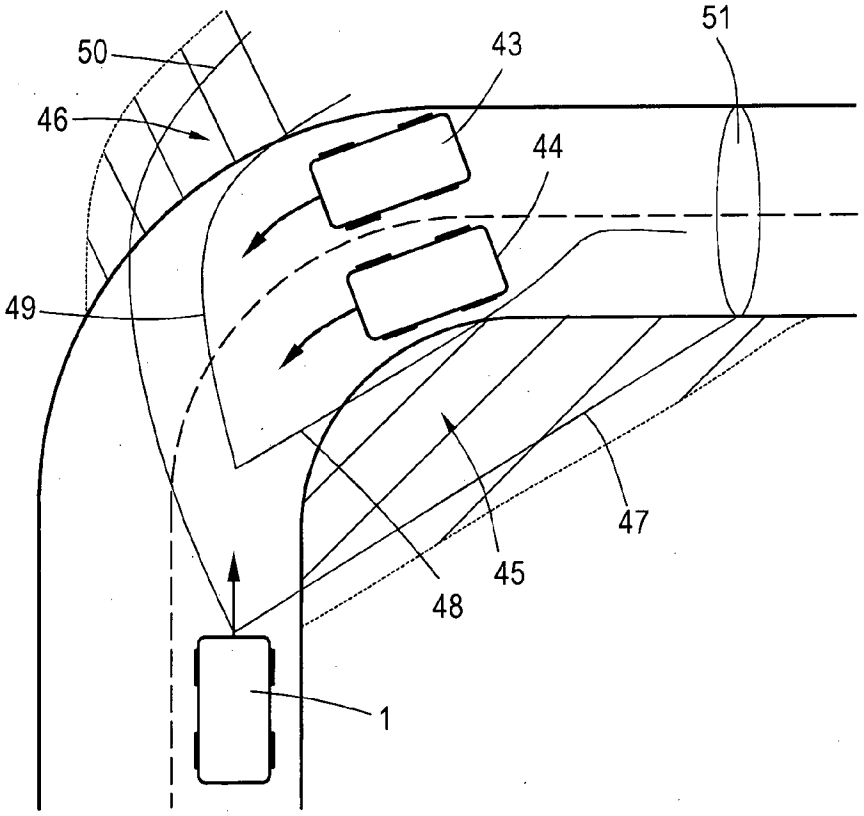

FIG. 6

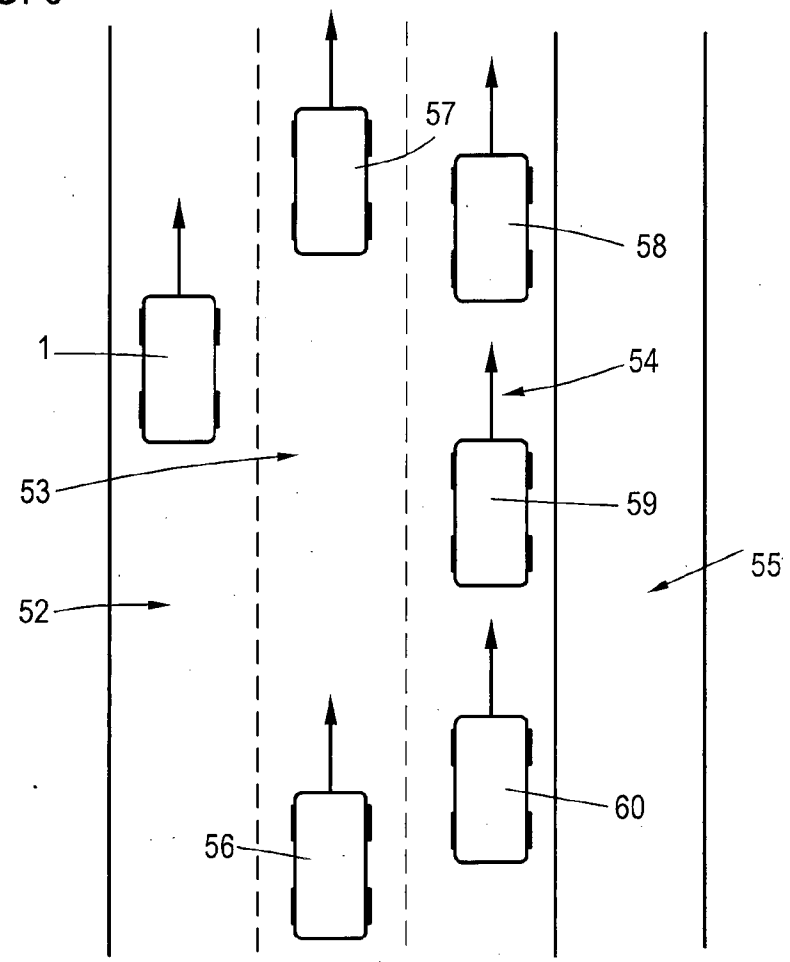

FIG. 7

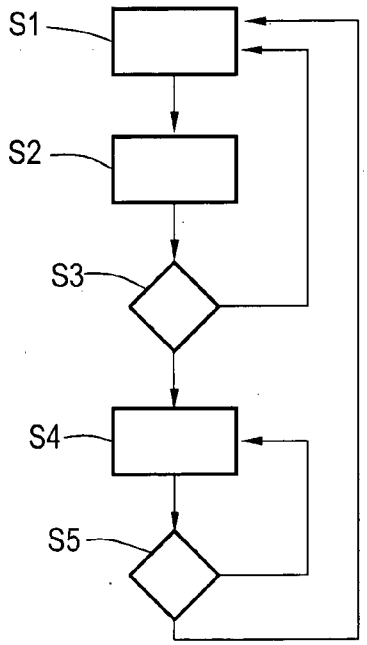

FIG. 8

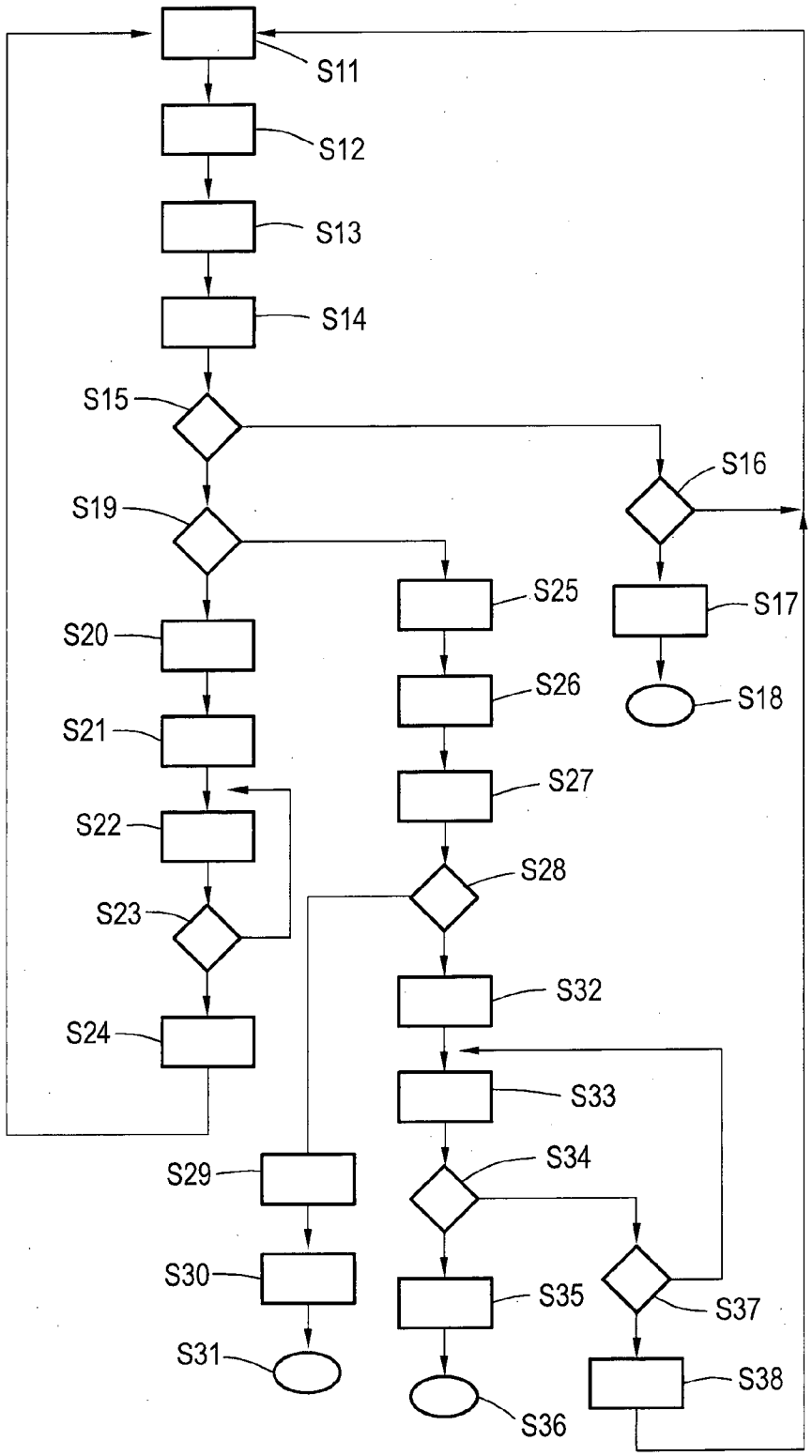
S11
S12
S13
S14
S15
S16
S17
S18
S19
S20
S21
S22
S23
S24
S25
S26
S27
S28
S29
S30
S31
S32
S33
S34
S35
S36
S37
S38

INTERNATIONAL SEARCH REPORT

International application No
PCT/EP2014/001971

A. CLASSIFICATION OF SUBJECT MATTER

INV. B60K28/06 B60W10/04 B60W10/10 B60W10/18 B60W10/20
B60W30/09 B60W30/095
ADD.

According to International Patent Classification (IPC) or to both national classification and IPC

B. FIELDS SEARCHED

Minimum documentation searched (classification system followed by classification symbols)

B60K B60W

Documentation searched other than minimum documentation to the extent that such documents are included in the fields searched

Electronic data base consulted during the international search (name of data base and, where practicable, search terms used)

EPO-Internal, WPI Data

C. DOCUMENTS CONSIDERED TO BE RELEVANT

Category*	Citation of document, with indication, where appropriate, of the relevant passages	Relevant to claim No.
A	WO 02/08010 A1 (DAIMLER CHRYSLER AG [DE]; DUDECK INGO [DE]; FREITAG RAINER [DE]; KURZ) 31 January 2002 (2002-01-31) the whole document	1-23

A	DE 10 2011 103610 A1 (DAIMLER AG [DE]) 15 December 2011 (2011-12-15) the whole document	1-23

A	DE 10 2011 111895 A1 (GM GLOBAL TECH OPERATIONS INC [US]) 28 February 2013 (2013-02-28) the whole document	1-23

A	US 8 260 482 B1 (SZYBALSKI ANDREW [US] ET AL) 4 September 2012 (2012-09-04) the whole document	1-23

☐ Further documents are listed in the continuation of Box C.

☒ See patent family annex.

* Special categories of cited documents :

"A" document defining the general state of the art which is not considered to be of particular relevance

"E" earlier application or patent but published on or after the international filing date

"L" document which may throw doubts on priority claim(s) or which is cited to establish the publication date of another citation or other special reason (as specified)

"O" document referring to an oral disclosure, use, exhibition or other means

"P" document published prior to the international filing date but later than the priority date claimed

"T" later document published after the international filing date or priority date and not in conflict with the application but cited to understand the principle or theory underlying the invention

"X" document of particular relevance; the claimed invention cannot be considered novel or cannot be considered to involve an inventive step when the document is taken alone

"Y" document of particular relevance; the claimed invention cannot be considered to involve an inventive step when the document is combined with one or more other such documents, such combination being obvious to a person skilled in the art

"&" document member of the same patent family

Date of the actual completion of the international search	Date of mailing of the international search report
10 November 2014	24/11/2014

Name and mailing address of the ISA/	Authorized officer
European Patent Office, P.B. 5818 Patentlaan 2 NL - 2280 HV Rijswijk Tel. (+31-70) 340-2040, Fax: (+31-70) 340-3016	Granier, Frédéric

1

Form PCT/ISA/210 (second sheet) (April 2005)

INTERNATIONAL SEARCH REPORT

Information on patent family members

International application No
PCT/EP2014/001971

Patent document cited in search report	Publication date	Patent family member(s)	Publication date
WO 0208010 A1	31-01-2002	DE 10036276 A1	07-02-2002
		EP 1303421 A1	23-04-2003
		ES 2217163 T3	01-11-2004
		JP 2004504216 A	12-02-2004
		US 2004090117 A1	13-05-2004
		WO 0208010 A1	31-01-2002
DE 102011103610 A1	15-12-2011	NONE	
DE 102011111895 A1	28-02-2013	CN 102963357 A	13-03-2013
		DE 102011111895 A1	28-02-2013
		US 2013060401 A1	07-03-2013
US 8260482 B1	04-09-2012	US 8260482 B1	04-09-2012
		US 8352110 B1	08-01-2013
		US 8433470 B1	30-04-2013
		US 8670891 B1	11-03-2014
		US 8825261 B1	02-09-2014

INTERNATIONALER RECHERCHENBERICHT

Internationales Aktenzeichen
PCT/EP2014/001971

A. KLASSIFIZIERUNG DES ANMELDUNGSGEGENSTANDES

INV. B60K28/06 B60W10/04 B60W10/10 B60W10/18 B60W10/20
B60W30/09 B60W30/095
ADD.

Nach der Internationalen Patentklassifikation (IPC) oder nach der nationalen Klassifikation und der IPC

B. RECHERCHIERTE GEBIETE

Recherchierter Mindestprüfstoff (Klassifikationssystem und Klassifikationssymbole)
B60K B60W

Recherchierte, aber nicht zum Mindestprüfstoff gehörende Veröffentlichungen, soweit diese unter die recherchierten Gebiete fallen

Während der internationalen Recherche konsultierte elektronische Datenbank (Name der Datenbank und evtl. verwendete Suchbegriffe)

EPO-Internal, WPI Data

C. ALS WESENTLICH ANGESEHENE UNTERLAGEN

Kategorie*	Bezeichnung der Veröffentlichung, soweit erforderlich unter Angabe der in Betracht kommenden Teile	Betr. Anspruch Nr.
A	WO 02/08010 A1 (DAIMLER CHRYSLER AG [DE]; DUDECK INGO [DE]; FREITAG RAINER [DE]; KURZ) 31. Januar 2002 (2002-01-31) das ganze Dokument	1-23
A	DE 10 2011 103610 A1 (DAIMLER AG [DE]) 15. Dezember 2011 (2011-12-15) das ganze Dokument	1-23
A	DE 10 2011 111895 A1 (GM GLOBAL TECH OPERATIONS INC [US]) 28. Februar 2013 (2013-02-28) das ganze Dokument	1-23
A	US 8 260 482 B1 (SZYBALSKI ANDREW [US] ET AL) 4. September 2012 (2012-09-04) das ganze Dokument	1-23

☐ Weitere Veröffentlichungen sind der Fortsetzung von Feld C zu entnehmen ☒ Siehe Anhang Patentfamilie

* Besondere Kategorien von angegebenen Veröffentlichungen :

"A" Veröffentlichung, die den allgemeinen Stand der Technik definiert, aber nicht als besonders bedeutsam anzusehen ist

"E" frühere Anmeldung oder Patent, die bzw. das jedoch erst am oder nach dem internationalen Anmeldedatum veröffentlicht worden ist

"L" Veröffentlichung, die geeignet ist, einen Prioritätsanspruch zweifelhaft erscheinen zu lassen, oder durch die das Veröffentlichungsdatum einer anderen im Recherchenbericht genannten Veröffentlichung belegt werden soll oder die aus einem anderen besonderen Grund angegeben ist (wie ausgeführt)

"O" Veröffentlichung, die sich auf eine mündliche Offenbarung, eine Benutzung, eine Ausstellung oder andere Maßnahmen bezieht

"P" Veröffentlichung, die vor dem internationalen Anmeldedatum, aber nach dem beanspruchten Prioritätsdatum veröffentlicht worden ist

"T" Spätere Veröffentlichung, die nach dem internationalen Anmeldedatum oder dem Prioritätsdatum veröffentlicht worden ist und mit der Anmeldung nicht kollidiert, sondern nur zum Verständnis des der Erfindung zugrundeliegenden Prinzips oder der ihr zugrundeliegenden Theorie angegeben ist

"X" Veröffentlichung von besonderer Bedeutung; die beanspruchte Erfindung kann allein aufgrund dieser Veröffentlichung nicht als neu oder auf erfinderischer Tätigkeit beruhend betrachtet werden

"Y" Veröffentlichung von besonderer Bedeutung; die beanspruchte Erfindung kann nicht als auf erfinderischer Tätigkeit beruhend betrachtet werden, wenn die Veröffentlichung mit einer oder mehreren Veröffentlichungen dieser Kategorie in Verbindung gebracht wird und diese Verbindung für einen Fachmann naheliegend ist

"&" Veröffentlichung, die Mitglied derselben Patentfamilie ist

Datum des Abschlusses der internationalen Recherche	Absendedatum des internationalen Recherchenberichts
10. November 2014	24/11/2014

Name und Postanschrift der Internationalen Recherchenbehörde	Bevollmächtigter Bediensteter
Europäisches Patentamt, P.B. 5818 Patentlaan 2 NL - 2280 HV Rijswijk Tel. (+31-70) 340-2040, Fax: (+31-70) 340-3016	Granier, Frédéric

1

INTERNATIONALER RECHERCHENBERICHT

Angaben zu Veröffentlichungen, die zur selben Patentfamilie gehören

Internationales Aktenzeichen
PCT/EP2014/001971

Im Recherchenbericht angeführtes Patentdokument	Datum der Veröffentlichung	Mitglied(er) der Patentfamilie	Datum der Veröffentlichung
WO 0208010 A1	31-01-2002	DE 10036276 A1	07-02-2002
		EP 1303421 A1	23-04-2003
		ES 2217163 T3	01-11-2004
		JP 2004504216 A	12-02-2004
		US 2004090117 A1	13-05-2004
		WO 0208010 A1	31-01-2002
DE 102011103610 A1	15-12-2011	KEINE	
DE 102011111895 A1	28-02-2013	CN 102963357 A	13-03-2013
		DE 102011111895 A1	28-02-2013
		US 2013060401 A1	07-03-2013
US 8260482 B1	04-09-2012	US 8260482 B1	04-09-2012
		US 8352110 B1	08-01-2013
		US 8433470 B1	30-04-2013
		US 8670891 B1	11-03-2014
		US 8825261 B1	02-09-2014

(12) INTERNATIONAL APPLICATION PUBLISHED UNDER THE PATENT COOPERATION TREATY (PCT)

(19) World Intellectual Property Organization
International Bureau

(43) International Publication Date
23 April 2015 (23.04.2015)

WIPO | PCT

(10) International Publication Number
WO 2015/056105 A1

(51) International Patent Classification:
G06K 9/00791 (2006.01) *G05D 1/02* (2006.01)

(21) International Application Number:
PCT/IB2014/002876

(22) International Filing Date:
14 October 2014 (14.10.2014)

(25) Filing Language: English

(26) Publication Language: English

(30) Priority Data:

61/890,412	14 October 2013 (14.10.2013)	US
62/040,224	21 August 2014 (21.08.2014)	US
62/040,269	21 August 2014 (21.08.2014)	US

(71) Applicant: **MOBILEYE VISION TECHNOLOGIES LTD.** [IL/IL]; 13 Hartom Street, P.O.B. 45157, Har Hotzvim, 91450 Jerisalem (IL).

(72) Inventors: **SHASHUA, Amnon**; Tavor 26 Street, 9076726 Mevaseret (IL). **HAYON, Gaby**; 90 Hashalom Street, 9071440 Meveseret Zion (IL). **HADAD, Yossi**; Keshet Street 163, Keidar (IL). **BELMAN, Efim**; 20/11 Carmon Street, 9630834 Jerusalem (IL). **BAGON, Eyal**; 11 Yotam Street, 9315315 Jerusalem (IL).

(81) Designated States *(unless otherwise indicated, for every kind of national protection available)*: AE, AG, AL, AM, AO, AT, AU, AZ, BA, BB, BG, BH, BN, BR, BW, BY, BZ, CA, CH, CL, CN, CO, CR, CU, CZ, DE, DK, DM, DO, DZ, EC, EE, EG, ES, FI, GB, GD, GE, GH, GM, GT, HN, HR, HU, ID, IL, IN, IR, IS, JP, KE, KG, KN, KP, KR, KZ, LA, LC, LK, LR, LS, LU, LY, MA, MD, ME, MG, MK, MN, MW, MX, MY, MZ, NA, NG, NI, NO, NZ, OM, PA, PE, PG, PH, PL, PT, QA, RO, RS, RU, RW, SA, SC, SD, SE, SG, SK, SL, SM, ST, SV, SY, TH, TJ, TM, TN, TR, TT, TZ, UA, UG, US, UZ, VC, VN, ZA, ZM, ZW.

(84) Designated States *(unless otherwise indicated, for every kind of regional protection available)*: ARIPO (BW, GH, GM, KE, LR, LS, MW, MZ, NA, RW, SD, SL, ST, SZ, TZ, UG, ZM, ZW), Eurasian (AM, AZ, BY, KG, KZ, RU, TJ, TM), European (AL, AT, BE, BG, CH, CY, CZ, DE, DK, EE, ES, FI, FR, GB, GR, HR, HU, IE, IS, IT, LT, LU, LV, MC, MK, MT, NL, NO, PL, PT, RO, RS, SE, SI, SK, SM, TR), OAPI (BF, BJ, CF, CG, CI, CM, GA, GN, GQ, GW, KM, ML, MR, NE, SN, TD, TG).

Published:

— *with international search report (Art. 21(3))*

— *before the expiration of the time limit for amending the claims and to be republished in the event of receipt of amendments (Rule 48.2(h))*

(54) Title: FORWARD-FACING MULTI-IMAGING SYSTEM FOR NAVIGATING A VEHICLE

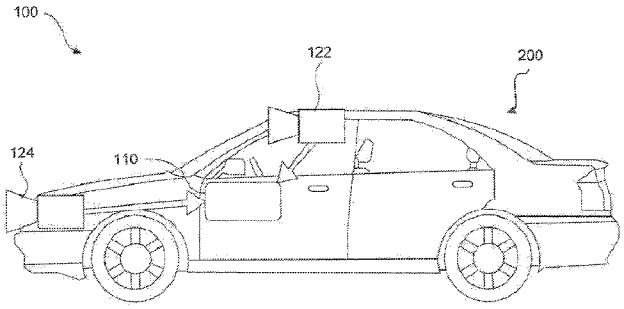

FIG. 2A

(57) Abstract: Systems and methods use cameras to provide autonomous navigation features. In one implementation, a driver-assist system is provided for a vehicle. The system may include one or more image capture devices configured to acquire images of an area forward of the vehicle. The system may also include at least one processing device configured to receive, via one or more data interfaces, the images. The at least one processing device may be further configured to analyze the images acquired by the one or more image capture devices and cause at least one navigational response in the vehicle based on monocular and/or stereo image analysis of the images.

WO 2015/056105 A1

FORWARD-FACING MULTI-IMAGING SYSTEM FOR NAVIGATING A VEHICLE

CROSS REFERENCES TO RELATED APPLICATIONS

[001] This application claims the benefit of priority of United States Provisional Patent Application No. 61/890,412, filed on October 14, 2013; United States Provisional Patent Application No. 62/040,224, filed on August 21, 2014; and United States Provisional Patent Application No. 62/040,269, filed on August 21, 2014. All of the foregoing applications are incorporated herein by reference in their entirety.

BACKGROUND

I. Technical Field

[002] The present disclosure relates generally to autonomous vehicle navigation and, more specifically, to systems and methods that use cameras to provide autonomous vehicle navigation features.

II. Background Information

[003] As technology continues to advance, the goal of a fully autonomous vehicle that is capable of navigating on roadways is on the horizon. Primarily, an autonomous vehicle may be able to identify its environment and navigate without input from a human operator. Autonomous vehicles may also take into account a variety of factors and make appropriate decisions based on those factors to safely and accurately reach an intended destination. For example, various objects—such as other vehicles and pedestrians—are encountered when a vehicle typically travels a roadway. Autonomous driving systems may recognize these objects in a vehicle's environment and take appropriate and timely action to avoid collisions. Additionally, autonomous driving systems may identify other indicators—such as traffic signals, traffic signs, and lane markings—that regulate vehicle movement (e.g., when the vehicle must stop and may go, a speed at which the vehicle must not exceed, where the vehicle must be positioned on the roadway, etc.). Autonomous driving systems may need to determine when a vehicle should change lanes, turn at intersections, change roadways, etc. As is evident from these examples, many factors may need to be addressed in order to provide an autonomous vehicle that is capable of navigating safely and accurately.

SUMMARY

[004] Embodiments consistent with the present disclosure provide systems and methods for autonomous vehicle navigation. The disclosed embodiments may use cameras to provide autonomous vehicle navigation features. For example, consistent with the disclosed embodiments, the disclosed systems may include one, two, or more cameras that monitor the environment of a vehicle and cause a navigational response based on an analysis of images captured by one or more of the cameras.

[005] Consistent with a disclosed embodiment, a driver-assist system is provided for a vehicle. The system may include a first image capture device configured to acquire a first plurality of images of an area forward of the vehicle and a second image capture device configured to acquire a second plurality of images of an area forward of the vehicle. The first image capture device may have a first angular field of view and the second image capture device may have a second angular field of view. The system may also

IPR2025-01034
Tesla EX1002 Page 2064

include a first data interface, a first processing device, a second data interface, and a second processing device. The first processing device may be configured to receive, via the first data interface, the first plurality of images, analyze the first plurality of images, and cause at least one navigational response in the vehicle based on monocular image analysis of the first plurality of images. The second processing device may be configured to receive, via the second data interface, the second plurality of images, analyze the second plurality of images, and cause at least one navigational response in the vehicle based on monocular image analysis of the second plurality of images.

[006] Consistent with another disclosed embodiment, a driver-assist system is provided for a vehicle. The system may include a first image capture device configured to acquire a first plurality of images of an area forward of the vehicle, a second image capture device configured to acquire a second plurality of images of an area forward of the vehicle, and a third image capture device configured to acquire a third plurality of images of an area forward of the vehicle. The first image capture device may have a first angular field of view, the second image capture device may have a second angular field of view greater than the first angular field of view, and the third image capture device may have a third angular field of view greater than the second angular field of view. The system may further include a data interface and at least one processing device. The at least one processing device may be configured to receive, via the data interface, the first, second, and third plurality of images; analyze the first, second, and third plurality of images; and cause at least one navigational response in the vehicle based on image information derived from any two of the first, second, and third plurality of images.

[007] Consistent with other disclosed embodiments, a vehicle is provided that may include a body and any of the driver-assist systems disclosed herein. Further, methods consistent with any of the disclosed embodiments may provide functionality for implementing any of the driver-assist systems disclosed herein.

[008] Consistent with other disclosed embodiments, non-transitory computer-readable storage media may store program instructions, which are executed by at least one processing device and perform any of the methods described herein.

[009] The foregoing general description and the following detailed description are exemplary and explanatory only and are not restrictive of the claims.

BRIEF DESCRIPTION OF THE DRAWINGS

[010] The accompanying drawings, which are incorporated in and constitute a part of this disclosure, illustrate various disclosed embodiments. In the drawings:

[011] FIG. 1 is a diagrammatic representation of an exemplary system consistent with the disclosed embodiments.

[012] FIG. 2A is a diagrammatic side view representation of an exemplary vehicle including a system consistent with the disclosed embodiments.

[013] FIG. 2B is a diagrammatic top view representation of the vehicle and system shown in FIG. 2A consistent with the disclosed embodiments.

IPR2025-01034
Tesla EX1002 Page 2065

[014] FIG. 2C is a diagrammatic top view representation of another embodiment of a vehicle including a system consistent with the disclosed embodiments.

[015] FIG. 2D is a diagrammatic top view representation of yet another embodiment of a vehicle including a system consistent with the disclosed embodiments.

[016] FIG. 2E is a diagrammatic top view representation of yet another embodiment of a vehicle including a system consistent with the disclosed embodiments.

[017] FIG. 2F is a diagrammatic representation of exemplary vehicle control systems consistent with the disclosed embodiments.

[018] FIG. 3A is a diagrammatic representation of an interior of a vehicle including a rearview mirror and a user interface for a vehicle imaging system consistent with the disclosed embodiments.

[019] FIG. 3B is an illustration of an example of a camera mount that is configured to be positioned behind a rearview mirror and against a vehicle windshield consistent with the disclosed embodiments.

[020] FIG. 3C is an illustration of the camera mount shown in FIG. 3B from a different perspective consistent with the disclosed embodiments.

[021] FIG. 3D is an illustration of an example of a camera mount that is configured to be positioned behind a rearview mirror and against a vehicle windshield consistent with the disclosed embodiments.

[022] FIG. 4 is an exemplary block diagram of a memory configured to store instructions for performing one or more operations consistent with the disclosed embodiments.

[023] FIG. 5A is a flowchart showing an exemplary process for causing one or more navigational responses based on monocular image analysis consistent with disclosed embodiments.

[024] FIG. 5B is a flowchart showing an exemplary process for detecting one or more vehicles and/or pedestrians in a set of images consistent with the disclosed embodiments.

[025] FIG. 5C is a flowchart showing an exemplary process for detecting road marks and/or lane geometry information in a set of images consistent with the disclosed embodiments.

[026] FIG. 5D is a flowchart showing an exemplary process for detecting traffic lights in a set of images consistent with the disclosed embodiments.

[027] FIG. 6 is a flowchart showing an exemplary process for causing one or more navigational responses based on stereo image analysis consistent with the disclosed embodiments.

[028] FIG. 7 is a flowchart showing an exemplary process for causing one or more navigational responses based on an analysis of three sets of images consistent with the disclosed embodiments.

DETAILED DESCRIPTION

[029] The following detailed description refers to the accompanying drawings. Wherever possible, the same reference numbers are used in the drawings and the following description to refer to the same or similar parts. While several illustrative embodiments are described herein, modifications, adaptations and other implementations are possible. For example, substitutions, additions or modifications may be made to the components illustrated in the drawings, and the illustrative methods

IPR2025-01034
Tesla EX1002 Page 2066

described herein may be modified by substituting, reordering, removing, or adding steps to the disclosed methods. Accordingly, the following detailed description is not limited to the disclosed embodiments and examples. Instead, the proper scope is defined by the appended claims.

[030] Disclosed embodiments provide systems and methods that use cameras to provide autonomous navigation features. In various embodiments, the system may include one, two or more cameras that monitor the environment of a vehicle. In one embodiment, the system may monitor and adjust the free space between a vehicle and the boundaries of the lane within which the vehicle is traveling. In another embodiment, the system may select a particular lane as a default lane for the vehicle to use while traveling. In another embodiment, the system may control the speed of the vehicle in different scenarios, such as while making a turn. In yet another embodiment, the system may mimic the actions of a leading vehicle. In yet another embodiment, the system may monitor a target vehicle and enable the vehicle to pass the target vehicle under certain conditions (e.g., if the target vehicle is traveling in a lane different from the lane within which the vehicle is traveling. In still yet another embodiment, the system may produce a natural feeling response to a laterally encroaching vehicle, such as a vehicle attempting to move into the lane within which the vehicle is traveling.

[031] FIG. 1 is a block diagram representation of a system 100 consistent with the exemplary disclosed embodiments. System 100 may include various components depending on the requirements of a particular implementation. In some embodiments, system 100 may include a processing unit 110, an image acquisition unit 120, a position sensor 130, one or more memory units 140, 150, a map database 160, and a user interface 170. Processing unit 110 may include one or more processing devices. In some embodiments, processing unit 110 may include an applications processor 180, an image processor 190, or any other suitable processing device. Similarly, image acquisition unit 120 may include any number of image acquisition devices and components depending on the requirements of a particular application. In some embodiments, image acquisition unit 120 may include one or more image capture devices (e.g., cameras), such as image capture device 122, image capture device 124, and image capture device 126. System 100 may also include a data interface 128 communicatively connecting processing device 110 to image acquisition device 120. For example, data interface 128 may include any wired and/or wireless link or links for transmitting image data acquired by image accusation device 120 to processing unit 110.

[032] Both applications processor 180 and image processor 190 may include various types of processing devices. For example, either or both of applications processor 180 and image processor 190 may include a microprocessor, preprocessors (such as an image preprocessor), graphics processors, a central processing unit (CPU), support circuits, digital signal processors, integrated circuits, memory, or any other types of devices suitable for running applications and for image processing and analysis. In some embodiments, applications processor 180 and/or image processor 190 may include any type of single or multi-core processor, mobile device microcontroller, central processing unit, etc. Various processing devices may be used, including, for example, processors available from manufacturers such as Intel®, AMD®, etc. and may include various architectures (e.g., x86 processor, ARM®, etc.).

IPR2025-01034
Tesla EX1002 Page 2067

[033] In some embodiments, applications processor 180 and/or image processor 190 may include any of the EyeQ series of processor chips available from Mobileye®. These processor designs each include multiple processing units with local memory and instruction sets. Such processors may include video inputs for receiving image data from multiple image sensors and may also include video out capabilities. In one example, the EyeQ2® uses 90nm-micron technology operating at 332Mhz. The EyeQ2® architecture consists of two floating point, hyper-thread 32-bit RISC CPUs (MIPS32® 34K® cores), five Vision Computing Engines (VCE), three Vector Microcode Processors (VMP®), Denali 64-bit Mobile DDR Controller, 128-bit internal Sonics Interconnect, dual 16-bit Video input and 18-bit Video output controllers, 16 channels DMA and several peripherals. The MIPS34K CPU manages the five VCEs, three VMP™ and the DMA, the second MIPS34K CPU and the multi-channel DMA as well as the other peripherals. The five VCEs, three VMP® and the MIPS34K CPU can perform intensive vision computations required by multi-function bundle applications. In another example, the EyeQ3®, which is a third generation processor and is six times more powerful that the EyeQ2®, may be used in the disclosed embodiments.

[034] While FIG. 1 depicts two separate processing devices included in processing unit 110, more or fewer processing devices may be used. For example, in some embodiments, a single processing device may be used to accomplish the tasks of applications processor 180 and image processor 190. In other embodiments, these tasks may be performed by more than two processing devices.

[035] Processing unit 110 may comprise various types of devices. For example, processing unit 110 may include various devices, such as a controller, an image preprocessor, a central processing unit (CPU), support circuits, digital signal processors, integrated circuits, memory, or any other types of devices for image processing and analysis. The image preprocessor may include a video processor for capturing, digitizing and processing the imagery from the image sensors. The CPU may comprise any number of microcontrollers or microprocessors. The support circuits may be any number of circuits generally well known in the art, including cache, power supply, clock and input-output circuits. The memory may store software that, when executed by the processor, controls the operation of the system. The memory may include databases and image processing software. The memory may comprise any number of random access memories, read only memories, flash memories, disk drives, optical storage, tape storage, removable storage and other types of storage. In one instance, the memory may be separate from the processing unit 110. In another instance, the memory may be integrated into the processing unit 110.

[036] Each memory 140, 150 may include software instructions that when executed by a processor (e.g., applications processor 180 and/or image processor 190), may control operation of various aspects of system 100. These memory units may include various databases and image processing software. The memory units may include random access memory, read only memory, flash memory, disk drives, optical storage, tape storage, removable storage and/or any other types of storage. In some embodiments, memory units 140, 150 may be separate from the applications processor 180 and/or image

IPR2025-01034
Tesla EX1002 Page 2068

processor 190. In other embodiments, these memory units may be integrated into applications processor 180 and/or image processor 190.

[037] Position sensor 130 may include any type of device suitable for determining a location associated with at least one component of system 100. In some embodiments, position sensor 130 may include a GPS receiver. Such receivers can determine a user position and velocity by processing signals broadcasted by global positioning system satellites. Position information from position sensor 130 may be made available to applications processor 180 and/or image processor 190.

[038] User interface 170 may include any device suitable for providing information to or for receiving inputs from one or more users of system 100. In some embodiments, user interface 170 may include user input devices, including, for example, a touchscreen, microphone, keyboard, pointer devices, track wheels, cameras, knobs, buttons, etc. With such input devices, a user may be able to provide information inputs or commands to system 100 by typing instructions or information, providing voice commands, selecting menu options on a screen using buttons, pointers, or eye-tracking capabilities, or through any other suitable techniques for communicating information to system 100.

[039] User interface 170 may be equipped with one or more processing devices configured to provide and receive information to or from a user and process that information for use by, for example, applications processor 180. In some embodiments, such processing devices may execute instructions for recognizing and tracking eye movements, receiving and interpreting voice commands, recognizing and interpreting touches and/or gestures made on a touchscreen, responding to keyboard entries or menu selections, etc. In some embodiments, user interface 170 may include a display, speaker, tactile device, and/or any other devices for providing output information to a user.

[040] Map database 160 may include any type of database for storing map data useful to system 100. In some embodiments, map database 160 may include data relating to the position, in a reference coordinate system, of various items, including roads, water features, geographic features, businesses, points of interest, restaurants, gas stations, etc. Map database 160 may store not only the locations of such items, but also descriptors relating to those items, including, for example, names associated with any of the stored features. In some embodiments, map database 160 may be physically located with other components of system 100. Alternatively or additionally, map database 160 or a portion thereof may be located remotely with respect to other components of system 100 (e.g., processing unit 110). In such embodiments, information from map database 160 may be downloaded over a wired or wireless data connection to a network (e.g., over a cellular network and/or the Internet, etc.).

[041] Image capture devices 122, 124, and 126 may each include any type of device suitable for capturing at least one image from an environment. Moreover, any number of image capture devices may be used to acquire images for input to the image processor. Some embodiments may include only a single image capture device, while other embodiments may include two, three, or even four or more image capture devices. Image capture devices 122, 124, and 126 will be further described with reference to FIGS. 2B-2E, below.

IPR2025-01034
Tesla EX1002 Page 2069

[042] System 100, or various components thereof, may be incorporated into various different platforms. In some embodiments, system 100 may be included on a vehicle 200, as shown in FIG. 2A. For example, vehicle 200 may be equipped with a processing unit 110 and any of the other components of system 100, as described above relative to FIG. 1. While in some embodiments vehicle 200 may be equipped with only a single image capture device (e.g., camera), in other embodiments, such as those discussed in connection with FIGS. 2B-2E, multiple image capture devices may be used. For example, either of image capture devices 122 and 124 of vehicle 200, as shown in FIG. 2A, may be part of an ADAS (Advanced Driver Assistance Systems) imaging set.

[043] The image capture devices included on vehicle 200 as part of the image acquisition unit 120 may be positioned at any suitable location. In some embodiments, as shown in FIGS. 2A-2E and 3A-3C, image capture device 122 may be located in the vicinity of the rearview mirror. This position may provide a line of sight similar to that of the driver of vehicle 200, which may aid in determining what is and is not visible to the driver. Image capture device 122 may be positioned at any location near the rearview mirror, but placing image capture device 122 on the driver side of the mirror may further aid in obtaining images representative of the driver's field of view and/or line of sight.

[044] Other locations for the image capture devices of image acquisition unit 120 may also be used. For example, image capture device 124 may be located on or in a bumper of vehicle 200. Such a location may be especially suitable for image capture devices having a wide field of view. The line of sight of bumper-located image capture devices can be different from that of the driver and, therefore, the bumper image capture device and driver may not always see the same objects. The image capture devices (e.g., image capture devices 122, 124, and 126) may also be located in other locations. For example, the image capture devices may be located on or in one or both of the side mirrors of vehicle 200, on the roof of vehicle 200, on the hood of vehicle 200, on the trunk of vehicle 200, on the sides of vehicle 200, mounted on, positioned behind, or positioned in front of any of the windows of vehicle 200, and mounted in or near light figures on the front and/or back of vehicle 200, etc.

[045] In addition to image capture devices, vehicle 200 may include various other components of system 100. For example, processing unit 110 may be included on vehicle 200 either integrated with or separate from an engine control unit (ECU) of the vehicle. Vehicle 200 may also be equipped with a position sensor 130, such as a GPS receiver and may also include a map database 160 and memory units 140 and 150.

[046] FIG. 2A is a diagrammatic side view representation of an exemplary vehicle imaging system consistent with the disclosed embodiments. FIG. 2B is a diagrammatic top view illustration of the embodiment shown in FIG. 2A. As illustrated in FIG. 2B, the disclosed embodiments may include a vehicle 200 including in its body a system 100 with a first image capture device 122 positioned in the vicinity of the rearview mirror and/or near the driver of vehicle 200, a second image capture device 124 positioned on or in a bumper region (e.g., one of bumper regions 210) of vehicle 200, and a processing unit 110.

IPR2025-01034
Tesla EX1002 Page 2070

[047] As illustrated in FIG. 2C, image capture devices 122 and 124 may both be positioned in the vicinity of the rearview mirror and/or near the driver of vehicle 200. Additionally, while two image capture devices 122 and 124 are shown in FIGS. 2B and 2C, it should be understood that other embodiments may include more than two image capture devices. For example, in the embodiments shown in FIGS. 2D and 2E, first, second, and third image capture devices 122, 124, and 126, are included in the system 100 of vehicle 200.

[048] As illustrated in FIG. 2D, image capture device 122 may be positioned in the vicinity of the rearview mirror and/or near the driver of vehicle 200, and image capture devices 124 and 126 may be positioned on or in a bumper region (e.g., one of bumper regions 210) of vehicle 200. And as shown in FIG. 2E, image capture devices 122, 124, and 126 may be positioned in the vicinity of the rearview mirror and/or near the driver seat of vehicle 200. The disclosed embodiments are not limited to any particular number and configuration of the image capture devices, and the image capture devices may be positioned in any appropriate location within and/or on vehicle 200.

[049] It is to be understood that the disclosed embodiments are not limited to vehicles and could be applied in other contexts. It is also to be understood that disclosed embodiments are not limited to a particular type of vehicle 200 and may be applicable to all types of vehicles including automobiles, trucks, trailers, and other types of vehicles.

[050] The first image capture device 122 may include any suitable type of image capture device. Image capture device 122 may include an optical axis. In one instance, the image capture device 122 may include an Aptina M9V024 WVGA sensor with a global shutter. In other embodiments, image capture device 122 may provide a resolution of 1280x960 pixels and may include a rolling shutter. Image capture device 122 may include various optical elements. In some embodiments one or more lenses may be included, for example, to provide a desired focal length and field of view for the image capture device. In some embodiments, image capture device 122 may be associated with a 6mm lens or a 12mm lens. In some embodiments, image capture device 122 may be configured to capture images having a desired field-of-view (FOV) 202, as illustrated in FIG. 2D. For example, image capture device 122 may be configured to have a regular FOV, such as within a range of 40 degrees to 56 degrees, including a 46 degree FOV, 50 degree FOV, 52 degree FOV, or greater. Alternatively, image capture device 122 may be configured to have a narrow FOV in the range of 23 to 40 degrees, such as a 28 degree FOV or 36 degree FOV. In addition, image capture device 122 may be configured to have a wide FOV in the range of 100 to 180 degrees. In some embodiments, image capture device 122 may include a wide angle bumper camera or one with up to a 180 degree FOV.

[051] The first image capture device 122 may acquire a plurality of first images relative to a scene associated with the vehicle 200. Each of the plurality of first images may be acquired as a series of image scan lines, which may be captured using a rolling shutter. Each scan line may include a plurality of pixels.

IPR2025-01034
Tesla EX1002 Page 2071

[052] The first image capture device 122 may have a scan rate associated with acquisition of each of the first series of image scan lines. The scan rate may refer to a rate at which an image sensor can acquire image data associated with each pixel included in a particular scan line.

[053] Image capture devices 122, 124, and 126 may contain any suitable type and number of image sensors, including CCD sensors or CMOS sensors, for example. In one embodiment, a CMOS image sensor may be employed along with a rolling shutter, such that each pixel in a row is read one at a time, and scanning of the rows proceeds on a row-by-row basis until an entire image frame has been captured. In some embodiments, the rows may be captured sequentially from top to bottom relative to the frame.

[054] The use of a rolling shutter may result in pixels in different rows being exposed and captured at different times, which may cause skew and other image artifacts in the captured image frame. On the other hand, when the image capture device 122 is configured to operate with a global or synchronous shutter, all of the pixels may be exposed for the same amount of time and during a common exposure period. As a result, the image data in a frame collected from a system employing a global shutter represents a snapshot of the entire FOV (such as FOV 202) at a particular time. In contrast, in a rolling shutter application, each row in a frame is exposed and data is capture at different times. Thus, moving objects may appear distorted in an image capture device having a rolling shutter. This phenomenon will be described in greater detail below.

[055] The second image capture device 124 and the third image capturing device 126 may be any type of image capture device. Like the first image capture device 122, each of image capture devices 124 and 126 may include an optical axis. In one embodiment, each of image capture devices 124 and 126 may include an Aptina M9V024 WVGA sensor with a global shutter. Alternatively, each of image capture devices 124 and 126 may include a rolling shutter. Like image capture device 122, image capture devices 124 and 126 may be configured to include various lenses and optical elements. In some embodiments, lenses associated with image capture devices 124 and 126 may provide FOVs (such as FOVs 204 and 206) that are the same as, or narrower than, a FOV (such as FOV 202) associated with image capture device 122. For example, image capture devices 124 and 126 may have FOVs of 40 degrees, 30 degrees, 26 degrees, 23 degrees, 20 degrees, or less.

[056] Image capture devices 124 and 126 may acquire a plurality of second and third images relative to a scene associated with the vehicle 200. Each of the plurality of second and third images may be acquired as a second and third series of image scan lines, which may be captured using a rolling shutter. Each scan line or row may have a plurality of pixels. Image capture devices 124 and 126 may have second and third scan rates associated with acquisition of each of image scan lines included in the second and third series.

[057] Each image capture device 122, 124, and 126 may be positioned at any suitable position and orientation relative to vehicle 200. The relative positioning of the image capture devices 122, 124, and 126 may be selected to aid in fusing together the information acquired from the image capture devices. For example, in some embodiments, a FOV (such as FOV 204) associated with image capture

IPR2025-01034
Tesla EX1002 Page 2072

device 124 may overlap partially or fully with a FOV (such as FOV 202) associated with image capture device 122 and a FOV (such as FOV 206) associated with image capture device 126.

[058] Image capture devices 122, 124, and 126 may be located on vehicle 200 at any suitable relative heights. In one instance, there may be a height difference between the image capture devices 122, 124, and 126, which may provide sufficient parallax information to enable stereo analysis. For example, as shown in FIG. 2A, the two image capture devices 122 and 124 are at different heights. There may also be a lateral displacement difference between image capture devices 122, 124, and 126, giving additional parallax information for stereo analysis by processing unit 110, for example. The difference in the lateral displacement may be denoted by d_x, as shown in FIGS. 2C and 2D. In some embodiments, fore or aft displacement (e.g., range displacement) may exist between image capture devices 122, 124, and 126. For example, image capture device 122 may be located 0.5 to 2 meters or more behind image capture device 124 and/or image capture device 126. This type of displacement may enable one of the image capture devices to cover potential blind spots of the other image capture device(s).

[059] Image capture devices 122 may have any suitable resolution capability (e.g., number of pixels associated with the image sensor), and the resolution of the image sensor(s) associated with the image capture device 122 may be higher, lower, or the same as the resolution of the image sensor(s) associated with image capture devices 124 and 126. In some embodiments, the image sensor(s) associated with image capture device 122 and/or image capture devices 124 and 126 may have a resolution of 640 x 480, 1024 x 768, 1280 x 960, or any other suitable resolution.

[060] The frame rate (e.g., the rate at which an image capture device acquires a set of pixel data of one image frame before moving on to capture pixel data associated with the next image frame) may be controllable. The frame rate associated with image capture device 122 may be higher, lower, or the same as the frame rate associated with image capture devices 124 and 126. The frame rate associated with image capture devices 122, 124, and 126 may depend on a variety of factors that may affect the timing of the frame rate. For example, one or more of image capture devices 122, 124, and 126 may include a selectable pixel delay period imposed before or after acquisition of image data associated with one or more pixels of an image sensor in image capture device 122, 124, and/or 126. Generally, image data corresponding to each pixel may be acquired according to a clock rate for the device (e.g., one pixel per clock cycle). Additionally, in embodiments including a rolling shutter, one or more of image capture devices 122, 124, and 126 may include a selectable horizontal blanking period imposed before or after acquisition of image data associated with a row of pixels of an image sensor in image capture device 122, 124, and/or 126. Further, one or more of image capture devices 122, 124, and/or 126 may include a selectable vertical blanking period imposed before or after acquisition of image data associated with an image frame of image capture device 122, 124, and 126.

[061] These timing controls may enable synchronization of frame rates associated with image capture devices 122, 124, and 126, even where the line scan rates of each are different. Additionally, as will be discussed in greater detail below, these selectable timing controls, among other factors (e.g., image sensor resolution, maximum line scan rates, etc.) may enable synchronization of image capture

IPR2025-01034
Tesla EX1002 Page 2073

from an area where the FOV of image capture device 122 overlaps with one or more FOVs of image capture devices 124 and 126, even where the field of view of image capture device 122 is different from the FOVs of image capture devices 124 and 126.

[062] Frame rate timing in image capture device 122, 124, and 126 may depend on the resolution of the associated image sensors. For example, assuming similar line scan rates for both devices, if one device includes an image sensor having a resolution of 640 x 480 and another device includes an image sensor with a resolution of 1280 x 960, then more time will be required to acquire a frame of image data from the sensor having the higher resolution.

[063] Another factor that may affect the timing of image data acquisition in image capture devices 122, 124, and 126 is the maximum line scan rate. For example, acquisition of a row of image data from an image sensor included in image capture device 122, 124, and 126 will require some minimum amount of time. Assuming no pixel delay periods are added, this minimum amount of time for acquisition of a row of image data will be related to the maximum line scan rate for a particular device. Devices that offer higher maximum line scan rates have the potential to provide higher frame rates than devices with lower maximum line scan rates. In some embodiments, one or more of image capture devices 124 and 126 may have a maximum line scan rate that is higher than a maximum line scan rate associated with image capture device 122. In some embodiments, the maximum line scan rate of image capture device 124 and/or 126 may be 1.25, 1.5, 1.75, or 2 times or more than a maximum line scan rate of image capture device 122.

[064] In another embodiment, image capture devices 122, 124, and 126 may have the same maximum line scan rate, but image capture device 122 may be operated at a scan rate less than or equal to its maximum scan rate. The system may be configured such that one or more of image capture devices 124 and 126 operate at a line scan rate that is equal to the line scan rate of image capture device 122. In other instances, the system may be configured such that the line scan rate of image capture device 124 and/or image capture device 126 may be 1.25, 1.5, 1.75, or 2 times or more than the line scan rate of image capture device 122.

[065] In some embodiments, image capture devices 122, 124, and 126 may be asymmetric. That is, they may include cameras having different fields of view (FOV) and focal lengths. The fields of view of image capture devices 122, 124, and 126 may include any desired area relative to an environment of vehicle 200, for example. In some embodiments, one or more of image capture devices 122, 124, and 126 may be configured to acquire image data from an environment in front of vehicle 200, behind vehicle 200, to the sides of vehicle 200, or combinations thereof.

[066] Further, the focal length associated with each image capture device 122, 124, and/or 126 may be selectable (e.g., by inclusion of appropriate lenses etc.) such that each device acquires images of objects at a desired distance range relative to vehicle 200. For example, in some embodiments image capture devices 122, 124, and 126 may acquire images of close-up objects within a few meters from the vehicle. Image capture devices 122, 124, and 126 may also be configured to acquire images of objects at ranges more distant from the vehicle (e.g., 25 m, 50 m, 100 m, 150 m, or more). Further, the focal lengths

IPR2025-01034
Tesla EX1002 Page 2074

of image capture devices 122, 124, and 126 may be selected such that one image capture device (e.g., image capture device 122) can acquire images of objects relatively close to the vehicle (e.g., within 10 m or within 20 m) while the other image capture devices (e.g., image capture devices 124 and 126) can acquire images of more distant objects (e.g., greater than 20 m, 50 m, 100 m, 150 m, etc.) from vehicle 200.

[067] According to some embodiments, the FOV of one or more image capture devices 122, 124, and 126 may have a wide angle. For example, it may be advantageous to have a FOV of 140 degrees, especially for image capture devices 122, 124, and 126 that may be used to capture images of the area in the vicinity of vehicle 200. For example, image capture device 122 may be used to capture images of the area to the right or left of vehicle 200 and, in such embodiments, it may be desirable for image capture device 122 to have a wide FOV (e.g., at least 140 degrees).

[068] The field of view associated with each of image capture devices 122, 124, and 126 may depend on the respective focal lengths. For example, as the focal length increases, the corresponding field of view decreases.

[069] Image capture devices 122, 124, and 126 may be configured to have any suitable fields of view. In one particular example, image capture device 122 may have a horizontal FOV of 46 degrees, image capture device 124 may have a horizontal FOV of 23 degrees, and image capture device 126 may have a horizontal FOV in between 23 and 46 degrees. In another instance, image capture device 122 may have a horizontal FOV of 52 degrees, image capture device 124 may have a horizontal FOV of 26 degrees, and image capture device 126 may have a horizontal FOV in between 26 and 52 degrees. In some embodiments, a ratio of the FOV of image capture device 122 to the FOVs of image capture device 124 and/or image capture device 126 may vary from 1.5 to 2.0. In other embodiments, this ratio may vary between 1.25 and 2.25.

[070] System 100 may be configured so that a field of view of image capture device 122 overlaps, at least partially or fully, with a field of view of image capture device 124 and/or image capture device 126. In some embodiments, system 100 may be configured such that the fields of view of image capture devices 124 and 126, for example, fall within (e.g., are narrower than) and share a common center with the field of view of image capture device 122. In other embodiments, the image capture devices 122, 124, and 126 may capture adjacent FOVs or may have partial overlap in their FOVs. In some embodiments, the fields of view of image capture devices 122, 124, and 126 may be aligned such that a center of the narrower FOV image capture devices 124 and/or 126 may be located in a lower half of the field of view of the wider FOV device 122.

[071] FIG. 2F is a diagrammatic representation of exemplary vehicle control systems, consistent with the disclosed embodiments. As indicated in FIG. 2F, vehicle 200 may include throttling system 220, braking system 230, and steering system 240. System 100 may provide inputs (e.g., control signals) to one or more of throttling system 220, braking system 230, and steering system 240 over one or more data links (e.g., any wired and/or wireless link or links for transmitting data). For example, based on analysis of images acquired by image capture devices 122, 124, and/or 126, system 100 may provide

IPR2025-01034
Tesla EX1002 Page 2075

control signals to one or more of throttling system 220, braking system 230, and steering system 240 to navigate vehicle 200 (e.g., by causing an acceleration, a turn, a lane shift, etc.). Further, system 100 may receive inputs from one or more of throttling system 220, braking system 230, and steering system 24 indicating operating conditions of vehicle 200 (e.g., speed, whether vehicle 200 is braking and/or turning, etc.). Further details are provided in connection with FIGS. 4-7, below.

[072] As shown in FIG. 3A, vehicle 200 may also include a user interface 170 for interacting with a driver or a passenger of vehicle 200. For example, user interface 170 in a vehicle application may include a touch screen 320, knobs 330, buttons 340, and a microphone 350. A driver or passenger of vehicle 200 may also use handles (e.g., located on or near the steering column of vehicle 200 including, for example, turn signal handles), buttons (e.g., located on the steering wheel of vehicle 200), and the like, to interact with system 100. In some embodiments, microphone 350 may be positioned adjacent to a rearview mirror 310. Similarly, in some embodiments, image capture device 122 may be located near rearview mirror 310. In some embodiments, user interface 170 may also include one or more speakers 360 (e.g., speakers of a vehicle audio system). For example, system 100 may provide various notifications (e.g., alerts) via speakers 360.

[073] FIGS. 3B-3D are illustrations of an exemplary camera mount 370 configured to be positioned behind a rearview mirror (e.g., rearview mirror 310) and against a vehicle windshield, consistent with disclosed embodiments. As shown in FIG. 3B, camera mount 370 may include image capture devices 122, 124, and 126. Image capture devices 124 and 126 may be positioned behind a glare shield 380, which may be flush against the vehicle windshield and include a composition of film and/or anti-reflective materials. For example, glare shield 380 may be positioned such that it aligns against a vehicle windshield having a matching slope. In some embodiments, each of image capture devices 122, 124, and 126 may be positioned behind glare shield 380, as depicted, for example, in FIG. 3D. The disclosed embodiments are not limited to any particular configuration of image capture devices 122, 124, and 126, camera mount 370, and glare shield 380. FIG. 3C is an illustration of camera mount 370 shown in FIG. 3B from a front perspective.

[074] As will be appreciated by a person skilled in the art having the benefit of this disclosure, numerous variations and/or modifications may be made to the foregoing disclosed embodiments. For example, not all components are essential for the operation of system 100. Further, any component may be located in any appropriate part of system 100 and the components may be rearranged into a variety of configurations while providing the functionality of the disclosed embodiments. Therefore, the foregoing configurations are examples and, regardless of the configurations discussed above, system 100 can provide a wide range of functionality to analyze the surroundings of vehicle 200 and navigate vehicle 200 in response to the analysis.

[075] As discussed below in further detail and consistent with various disclosed embodiments, system 100 may provide a variety of features related to autonomous driving and/or driver assist technology. For example, system 100 may analyze image data, position data (e.g., GPS location information), map data, speed data, and/or data from sensors included in vehicle 200. System 100 may

IPR2025-01034
Tesla EX1002 Page 2076

collect the data for analysis from, for example, image acquisition unit 120, position sensor 130, and other sensors. Further, system 100 may analyze the collected data to determine whether or not vehicle 200 should take a certain action, and then automatically take the determined action without human intervention. For example, when vehicle 200 navigates without human intervention, system 100 may automatically control the braking, acceleration, and/or steering of vehicle 200 (e.g., by sending control signals to one or more of throttling system 220, braking system 230, and steering system 240). Further, system 100 may analyze the collected data and issue warnings and/or alerts to vehicle occupants based on the analysis of the collected data.

[076] Forward-Facing Multi-Imaging System

[077] As discussed above, system 100 may provide drive assist functionality that uses a multi-camera system. The multi-camera system may use one or more cameras facing in the forward direction of a vehicle. In other embodiments, the multi-camera system may include one or more cameras facing to the side of a vehicle or to the rear of the vehicle. In one embodiment, for example, system 100 may use a two-camera imaging system, where a first camera and a second camera (e.g., image capture devices 122 and 124) may be positioned at the front and/or the sides of a vehicle (e.g., vehicle 200). The first camera may have a field of view that is greater than, less than, or partially overlapping with, the field of view of the second camera. In addition, the first camera may be connected to a first image processor to perform monocular image analysis of images provided by the first camera, and the second camera may be connected to a second image processor to perform monocular image analysis of images provided by the second camera. The outputs (e.g., processed information) of the first and second image processors may be combined. In some embodiments, the second image processor may receive images from both the first camera and second camera to perform stereo analysis. In another embodiment, system 100 may use a three-camera imaging system where each of the cameras has a different field of view. Such a system may, therefore, make decisions based on information derived from objects located at varying distances both forward and to the sides of the vehicle. References to monocular image analysis may refer to instances where image analysis is performed based on images captured from a single point of view (e.g., from a single camera). Stereo image analysis may refer to instances where image analysis is performed based on two or more images captured with one or more variations of an image capture parameter. For example, captured images suitable for performing stereo image analysis may include images captured: from two or more different positions, from different fields of view, using different focal lengths, along with parallax information, etc.

[078] For example, in one embodiment, system 100 may implement a three camera configuration using image capture devices 122-126. In such a configuration, image capture device 122 may provide a narrow field of view (e.g., 34 degrees, or other values selected from a range of about 20 to 45 degrees, etc.), image capture device 124 may provide a wide field of view (e.g., 150 degrees or other values selected from a range of about 100 to about 180 degrees), and image capture device 126 may provide an intermediate field of view (e.g., 46 degrees or other values selected from a range of about 35 to about 60 degrees). In some embodiments, image capture device 126 may act as a main or primary

camera. Image capture devices 122-126 may be positioned behind rearview mirror 310 and positioned substantially side-by-side (e.g., 6 cm apart). Further, in some embodiments, as discussed above, one or more of image capture devices 122-126 may be mounted behind glare shield 380 that is flush with the windshield of vehicle 200. Such shielding may act to minimize the impact of any reflections from inside the car on image capture devices 122-126.

[079] In another embodiment, as discussed above in connection with FIGS. 3B and 3C, the wide field of view camera (e.g., image capture device 124 in the above example) may be mounted lower than the narrow and main field of view cameras (e.g., image devices 122 and 126 in the above example). This configuration may provide a free line of sight from the wide field of view camera. To reduce reflections, the cameras may be mounted close to the windshield of vehicle 200, and may include polarizers on the cameras to damp reflected light.

[080] A three camera system may provide certain performance characteristics. For example, some embodiments may include an ability to validate the detection of objects by one camera based on detection results from another camera. In the three camera configuration discussed above, processing unit 110 may include, for example, three processing devices (e.g., three EyeQ series of processor chips, as discussed above), with each processing device dedicated to processing images captured by one or more of image capture devices 122-126.

[081] In a three camera system, a first processing device may receive images from both the main camera and the narrow field of view camera, and perform vision processing of the narrow FOV camera to, for example, detect other vehicles, pedestrians, lane marks, traffic signs, traffic lights, and other road objects. Further, the first processing device may calculate a disparity of pixels between the images from the main camera and the narrow camera and create a 3D reconstruction of the environment of vehicle 200. The first processing device may then combine the 3D reconstruction with 3D map data or with 3D information calculated based on information from another camera.

[082] The second processing device may receive images from main camera and perform vision processing to detect other vehicles, pedestrians, lane marks, traffic signs, traffic lights, and other road objects. Additionally, the second processing device may calculate a camera displacement and, based on the displacement, calculate a disparity of pixels between successive images and create a 3D reconstruction of the scene (e.g., a structure from motion). The second processing device may send the structure from motion based 3D reconstruction to the first processing device to be combined with the stereo 3D images.

[083] The third processing device may receive images from the wide FOV camera and process the images to detect vehicles, pedestrians, lane marks, traffic signs, traffic lights, and other road objects. The third processing device may further execute additional processing instructions to analyze images to identify objects moving in the image, such as vehicles changing lanes, pedestrians, etc.

[084] In some embodiments, having streams of image-based information captured and processed independently may provide an opportunity for providing redundancy in the system. Such redundancy may include, for example, using a first image capture device and the images processed from

IPR2025-01034
Tesla EX1002 Page 2078

that device to validate and/or supplement information obtained by capturing and processing image information from at least a second image capture device.

[085] In some embodiments, system 100 may use two image capture devices (e.g., image capture devices 122 and 124) in providing navigation assistance for vehicle 200 and use a third image capture device (e.g., image capture device 126) to provide redundancy and validate the analysis of data received from the other two image capture devices. For example, in such a configuration, image capture devices 122 and 124 may provide images for stereo analysis by system 100 for navigating vehicle 200, while image capture device 126 may provide images for monocular analysis by system 100 to provide redundancy and validation of information obtained based on images captured from image capture device 122 and/or image capture device 124. That is, image capture device 126 (and a corresponding processing device) may be considered to provide a redundant sub-system for providing a check on the analysis derived from image capture devices 122 and 124 (e.g., to provide an automatic emergency braking (AEB) system).

[086] One of skill in the art will recognize that the above camera configurations, camera placements, number of cameras, camera locations, etc., are examples only. These components and others described relative to the overall system may be assembled and used in a variety of different configurations without departing from the scope of the disclosed embodiments. Further details regarding usage of a multi-camera system to provide driver assist and/or autonomous vehicle functionality follow below.

[087] FIG. 4 is an exemplary functional block diagram of memory 140 and/or 150, which may be stored/programmed with instructions for performing one or more operations consistent with the disclosed embodiments. Although the following refers to memory 140, one of skill in the art will recognize that instructions may be stored in memory 140 and/or 150.

[088] As shown in FIG. 4, memory 140 may store a monocular image analysis module 402, a stereo image analysis module 404, a velocity and acceleration module 406, and a navigational response module 408. The disclosed embodiments are not limited to any particular configuration of memory 140. Further, application processor 180 and/or image processor 190 may execute the instructions stored in any of modules 402-408 included in memory 140. One of skill in the art will understand that references in the following discussions to processing unit 110 may refer to application processor 180 and image processor 190 individually or collectively. Accordingly, steps of any of the following processes may be performed by one or more processing devices.

[089] In one embodiment, monocular image analysis module 402 may store instructions (such as computer vision software) which, when executed by processing unit 110, performs monocular image analysis of a set of images acquired by one of image capture devices 122, 124, and 126. In some embodiments, processing unit 110 may combine information from a set of images with additional sensory information (e.g., information from radar) to perform the monocular image analysis. As described in connection with FIGS. 5A-5D below, monocular image analysis module 402 may include instructions for detecting a set of features within the set of images, such as lane markings, vehicles, pedestrians, road

IPR2025-01034
Tesla EX1002 Page 2079

signs, highway exit ramps, traffic lights, hazardous objects, and any other feature associated with an environment of a vehicle. Based on the analysis, system 100 (e.g., via processing unit 110) may cause one or more navigational responses in vehicle 200, such as a turn, a lane shift, a change in acceleration, and the like, as discussed below in connection with navigational response module 408.

[090] In one embodiment, stereo image analysis module 404 may store instructions (such as computer vision software) which, when executed by processing unit 110, performs stereo image analysis of first and second sets of images acquired by a combination of image capture devices selected from any of image capture devices 122, 124, and 126. In some embodiments, processing unit 110 may combine information from the first and second sets of images with additional sensory information (e.g., information from radar) to perform the stereo image analysis. For example, stereo image analysis module 404 may include instructions for performing stereo image analysis based on a first set of images acquired by image capture device 124 and a second set of images acquired by image capture device 126. As described in connection with FIG. 6 below, stereo image analysis module 404 may include instructions for detecting a set of features within the first and second sets of images, such as lane markings, vehicles, pedestrians, road signs, highway exit ramps, traffic lights, hazardous objects, and the like. Based on the analysis, processing unit 110 may cause one or more navigational responses in vehicle 200, such as a turn, a lane shift, a change in acceleration, and the like, as discussed below in connection with navigational response module 408.

[091] In one embodiment, velocity and acceleration module 406 may store software configured to analyze data received from one or more computing and electromechanical devices in vehicle 200 that are configured to cause a change in velocity and/or acceleration of vehicle 200. For example, processing unit 110 may execute instructions associated with velocity and acceleration module 406 to calculate a target speed for vehicle 200 based on data derived from execution of monocular image analysis module 402 and/or stereo image analysis module 404. Such data may include, for example, a target position, velocity, and/or acceleration, the position and/or speed of vehicle 200 relative to a nearby vehicle, pedestrian, or road object, position information for vehicle 200 relative to lane markings of the road, and the like. In addition, processing unit 110 may calculate a target speed for vehicle 200 based on sensory input (e.g., information from radar) and input from other systems of vehicle 200, such as throttling system 220, braking system 230, and/or steering system 240 of vehicle 200. Based on the calculated target speed, processing unit 110 may transmit electronic signals to throttling system 220, braking system 230, and/or steering system 240 of vehicle 200 to trigger a change in velocity and/or acceleration by, for example, physically depressing the brake or easing up off the accelerator of vehicle 200.

[092] In one embodiment, navigational response module 408 may store software executable by processing unit 110 to determine a desired navigational response based on data derived from execution of monocular image analysis module 402 and/or stereo image analysis module 404. Such data may include position and speed information associated with nearby vehicles, pedestrians, and road objects, target position information for vehicle 200, and the like. Additionally, in some embodiments, the navigational response may be based (partially or fully) on map data, a predetermined position of vehicle 200, and/or a

IPR2025-01034
Tesla EX1002 Page 2080

relative velocity or a relative acceleration between vehicle 200 and one or more objects detected from execution of monocular image analysis module 402 and/or stereo image analysis module 404. Navigational response module 408 may also determine a desired navigational response based on sensory input (e.g., information from radar) and inputs from other systems of vehicle 200, such as throttling system 220, braking system 230, and steering system 240 of vehicle 200. Based on the desired navigational response, processing unit 110 may transmit electronic signals to throttling system 220, braking system 230, and steering system 240 of vehicle 200 to trigger a desired navigational response by, for example, turning the steering wheel of vehicle 200 to achieve a rotation of a predetermined angle. In some embodiments, processing unit 110 may use the output of navigational response module 408 (e.g., the desired navigational response) as an input to execution of velocity and acceleration module 406 for calculating a change in speed of vehicle 200.

[093] FIG. 5A is a flowchart showing an exemplary process 500A for causing one or more navigational responses based on monocular image analysis, consistent with disclosed embodiments. At step 510, processing unit 110 may receive a plurality of images via data interface 128 between processing unit 110 and image acquisition unit 120. For instance, a camera included in image acquisition unit 120 (such as image capture device 122 having field of view 202) may capture a plurality of images of an area forward of vehicle 200 (or to the sides or rear of a vehicle, for example) and transmit them over a data connection (e.g., digital, wired, USB, wireless, Bluetooth, etc.) to processing unit 110. Processing unit 110 may execute monocular image analysis module 402 to analyze the plurality of images at step 520, as described in further detail in connection with FIGS. 5B-5D below. By performing the analysis, processing unit 110 may detect a set of features within the set of images, such as lane markings, vehicles, pedestrians, road signs, highway exit ramps, traffic lights, and the like.

[094] Processing unit 110 may also execute monocular image analysis module 402 to detect various road hazards at step 520, such as, for example, parts of a truck tire, fallen road signs, loose cargo, small animals, and the like. Road hazards may vary in structure, shape, size, and color, which may make detection of such hazards more challenging. In some embodiments, processing unit 110 may execute monocular image analysis module 402 to perform multi-frame analysis on the plurality of images to detect road hazards. For example, processing unit 110 may estimate camera motion between consecutive image frames and calculate the disparities in pixels between the frames to construct a 3D-map of the road. Processing unit 110 may then use the 3D-map to detect the road surface, as well as hazards existing above the road surface.

[095] At step 530, processing unit 110 may execute navigational response module 408 to cause one or more navigational responses in vehicle 200 based on the analysis performed at step 520 and the techniques as described above in connection with FIG. 4. Navigational responses may include, for example, a turn, a lane shift, a change in acceleration, and the like. In some embodiments, processing unit 110 may use data derived from execution of velocity and acceleration module 406 to cause the one or more navigational responses. Additionally, multiple navigational responses may occur simultaneously, in sequence, or any combination thereof. For instance, processing unit 110 may cause vehicle 200 to shift

IPR2025-01034
Tesla EX1002 Page 2081

one lane over and then accelerate by, for example, sequentially transmitting control signals to steering system 240 and throttling system 220 of vehicle 200. Alternatively, processing unit 110 may cause vehicle 200 to brake while at the same time shifting lanes by, for example, simultaneously transmitting control signals to braking system 230 and steering system 240 of vehicle 200.

[096] FIG. 5B is a flowchart showing an exemplary process 500B for detecting one or more vehicles and/or pedestrians in a set of images, consistent with disclosed embodiments. Processing unit 110 may execute monocular image analysis module 402 to implement process 500B. At step 540, processing unit 110 may determine a set of candidate objects representing possible vehicles and/or pedestrians. For example, processing unit 110 may scan one or more images, compare the images to one or more predetermined patterns, and identify within each image possible locations that may contain objects of interest (e.g., vehicles, pedestrians, or portions thereof). The predetermined patterns may be designed in such a way to achieve a high rate of "false hits" and a low rate of "misses." For example, processing unit 110 may use a low threshold of similarity to predetermined patterns for identifying candidate objects as possible vehicles or pedestrians. Doing so may allow processing unit 110 to reduce the probability of missing (e.g., not identifying) a candidate object representing a vehicle or pedestrian.

[097] At step 542, processing unit 110 may filter the set of candidate objects to exclude certain candidates (e.g., irrelevant or less relevant objects) based on classification criteria. Such criteria may be derived from various properties associated with object types stored in a database (e.g., a database stored in memory 140). Properties may include object shape, dimensions, texture, position (e.g., relative to vehicle 200), and the like. Thus, processing unit 110 may use one or more sets of criteria to reject false candidates from the set of candidate objects.

[098] At step 544, processing unit 110 may analyze multiple frames of images to determine whether objects in the set of candidate objects represent vehicles and/or pedestrians. For example, processing unit 110 may track a detected candidate object across consecutive frames and accumulate frame-by-frame data associated with the detected object (e.g., size, position relative to vehicle 200, etc.). Additionally, processing unit 110 may estimate parameters for the detected object and compare the object's frame-by-frame position data to a predicted position.

[099] At step 546, processing unit 110 may construct a set of measurements for the detected objects. Such measurements may include, for example, position, velocity, and acceleration values (relative to vehicle 200) associated with the detected objects. In some embodiments, processing unit 110 may construct the measurements based on estimation techniques using a series of time-based observations such as Kalman filters or linear quadratic estimation (LQE), and/or based on available modeling data for different object types (e.g., cars, trucks, pedestrians, bicycles, road signs, etc.). The Kalman filters may be based on a measurement of an object's scale, where the scale measurement is proportional to a time to collision (e.g., the amount of time for vehicle 200 to reach the object). Thus, by performing steps 540-546, processing unit 110 may identify vehicles and pedestrians appearing within the set of captured images and derive information (e.g., position, speed, size) associated with the vehicles and pedestrians.

IPR2025-01034
Tesla EX1002 Page 2082