US008825258B2

(12) **United States Patent**
Cullinane et al.

(10) **Patent No.: US 8,825,258 B2**
(45) **Date of Patent: Sep. 2, 2014**

(54) **ENGAGING AND DISENGAGING FOR AUTONOMOUS DRIVING**

(71) Applicant: **Google Inc.**, Mountain View, CA (US)

(72) Inventors: **Brian Cullinane**, San Jose, CA (US); **Philip Nemec**, San Jose, CA (US); **Manuel Christian Clement**, Felton, CA (US); **Robertus Christianus Elisabeth Mariet**, Sunnyvale, CA (US); **Lilli Ing-Marie Jonsson**, Mountain View, CA (US)

(73) Assignee: **Google Inc.**, Mountain View, CA (US)

(*) Notice: Subject to any disclaimer, the term of this patent is extended or adjusted under 35 U.S.C. 154(b) by 0 days.

(21) Appl. No.: **13/792,774**

(22) Filed: **Mar. 11, 2013**

(65) **Prior Publication Data**

US 2014/0156133 A1 Jun. 5, 2014

Related U.S. Application Data

(60) Provisional application No. 61/731,717, filed on Nov. 30, 2012.

(51) **Int. Cl.**
G05D 1/00 (2006.01)
G05D 1/02 (2006.01)

(52) **U.S. Cl.**
CPC ***G05D 1/0212*** (2013.01); ***G05D 1/0223*** (2013.01)
USPC **701/23**; 701/96; 701/117; 701/300; 701/301

(58) **Field of Classification Search**
CPC G05D 1/0212; G05D 1/0223; G05D 1/02019; G05D 1/0231; G05D 1/0234; G05D 1/0236; G05D 1/02; G05D 1/021; G05D 1/0287; G05D 1/0257; G05D 1/0276; G05D 1/0259; G05D 1/0268; G08G 1/16; G08G 1/08; G08G 1/00; G08G 1/09; G08G 1/0968
USPC 701/23, 27, 41, 96, 117, 118, 119, 36, 701/300, 301; 340/900–935, 438, 937, 340/425.5
See application file for complete search history.

(56) **References Cited**

U.S. PATENT DOCUMENTS

5,521,579 A 5/1996 Bernhard
5,644,386 A 7/1997 Jenkins et al.

(Continued)

FOREIGN PATENT DOCUMENTS

EP 2168835 A1 3/2010
JP 2005250564 A 9/2005

OTHER PUBLICATIONS

Bakambu et al., "Autonomous system for exploration and navigation in drift networks", 2004 IEEE Intelligent Vehicles Symposium, University of Parma, Parma, Italy, Jun. 14-17, pp. 212-217, 2004.

(Continued)

Primary Examiner — Richard Camby
(74) *Attorney, Agent, or Firm* — Lerner, David, Littenberg, Krumholz & Mentlik, LLP

(57) **ABSTRACT**

Aspects of the present disclosure relate switching between autonomous and manual driving modes. In order to do so, the vehicle's computer may conduct a series of environmental, system, and driver checks to identify certain conditions. The computer may correct some of these conditions and also provide a driver with a checklist of tasks for completion. Once the tasks have been completed and the conditions are changed, the computer may allow the driver to switch from the manual to the autonomous driving mode. The computer may also make a determination, under certain conditions, that it would be detrimental to the driver's safety or comfort to make a switch from the autonomous driving mode to the manual driving mode.

26 Claims, 10 Drawing Sheets

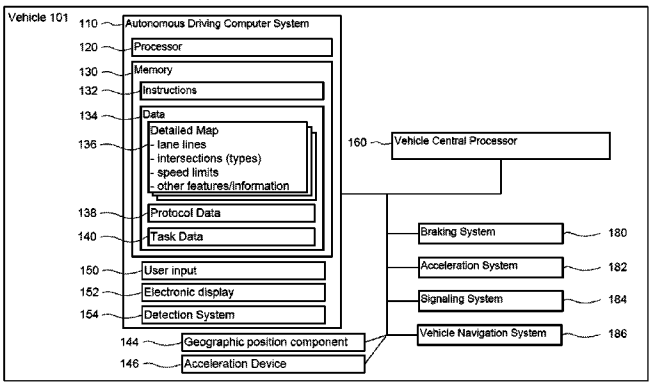

100

(56) **References Cited**

U.S. PATENT DOCUMENTS

5,684,697	A	11/1997	Mullen
5,774,069	A	6/1998	Tanaka et al.
5,835,870	A	11/1998	Kagawa
5,838,562	A	11/1998	Gudat et al.
5,874,904	A	2/1999	Hirabayashi et al.
5,906,645	A	5/1999	Kagawa et al.
5,983,161	A	11/1999	Lemelson et al.
6,044,312	A	3/2000	Sudo et al.
6,185,499	B1	2/2001	Kinoshita et al.
6,275,773	B1	8/2001	Lemelson et al.
6,324,463	B1	11/2001	Patel
6,337,638	B1	1/2002	Bates et al.
6,396,417	B2	5/2002	Lee
6,487,500	B2	11/2002	Lemelson et al.
6,516,262	B2	2/2003	Takenaga et al.
6,590,499	B1	7/2003	D'Agosto
6,768,962	B2	7/2004	Bullinger et al.
6,810,330	B2	10/2004	Matsuura
6,868,934	B2	3/2005	Dirrig
7,209,221	B2	4/2007	Breed et al.
7,295,904	B2	11/2007	Kanevsky et al.
7,319,777	B2	1/2008	Morcom
7,321,311	B2	1/2008	Rieth et al.
7,327,238	B2	2/2008	Bhogal et al.
7,430,473	B2	9/2008	Foo et al.
7,446,649	B2	11/2008	Bhogal et al.
7,486,176	B2	2/2009	Bhogal et al.
7,486,177	B2	2/2009	Wilbrink et al.
7,499,774	B2	3/2009	Barrett et al.
7,630,806	B2	12/2009	Breed
7,769,498	B2	8/2010	Isaji et al.
7,783,403	B2	8/2010	Breed
7,865,310	B2	1/2011	Nakano et al.
7,894,951	B2	2/2011	Norris et al.
7,925,438	B2	4/2011	Lo
7,979,172	B2	7/2011	Breed
7,979,173	B2	7/2011	Breed
8,050,863	B2	11/2011	Trepagnier et al.
8,126,642	B2	2/2012	Trepagnier et al.
8,204,670	B2	6/2012	Watanabe
8,269,652	B2	9/2012	Seder et al.
8,320,628	B2	11/2012	Cheng et al.
8,352,110	B1	1/2013	Szybalski et al.
8,384,532	B2	2/2013	Szczerba et al.
8,395,529	B2	3/2013	Seder et al.
8,433,470	B1	4/2013	Szybalski et al.
8,482,431	B2	7/2013	Kushi et al.
8,527,199	B1 *	9/2013	Burnette et al. 701/450
2005/0234612	A1	10/2005	Bottomley et al.
2006/0089765	A1	4/2006	Pack et al.
2008/0071177	A1	3/2008	Yanagidaira et al.
2008/0119994	A1	5/2008	Kameyama
2008/0306668	A1	12/2008	Wang et al.
2009/0147996	A1	6/2009	Peng
2009/0322547	A1	12/2009	Wen
2010/0063663	A1	3/2010	Tolstedt et al.
2010/0085173	A1	4/2010	Yang et al.
2010/0168998	A1	7/2010	Matsunaga
2010/0179715	A1	7/2010	Puddy
2010/0222976	A1	9/2010	Haug
2010/0228417	A1	9/2010	Lee et al.
2010/0332127	A1	12/2010	Imai et al.
2011/0140919	A1	6/2011	Hara et al.
2011/0193722	A1	8/2011	Johnson
2012/0035788	A1	2/2012	Trepagnier et al.
2012/0109418	A1	5/2012	Lorber
2012/0269391	A1	10/2012	Saito
2012/0283942	A1	11/2012	T'Siobbel et al.
2012/0288156	A1	11/2012	Kido
2013/0129150	A1	5/2013	Saito
2013/0131905	A1	5/2013	Green et al.
2013/0131906	A1	5/2013	Green et al.
2013/0131907	A1	5/2013	Green et al.

OTHER PUBLICATIONS

Sebastian Thrun, Toward Robotic Cars, Apr. 2010, pp. 99-106, No. 4, Communications of the ACM.

Sebastian, et al., Stanley: The Robot That Won the DARPA Grand Challenge, Journal of Field Robotics 23(9), 661-692 (2006), 2006 Wiley Periodicals, Inc.

International Search Report and Written Opinion for Application No. PCT/US2013/071846 dated Mar. 7, 2014.

* cited by examiner

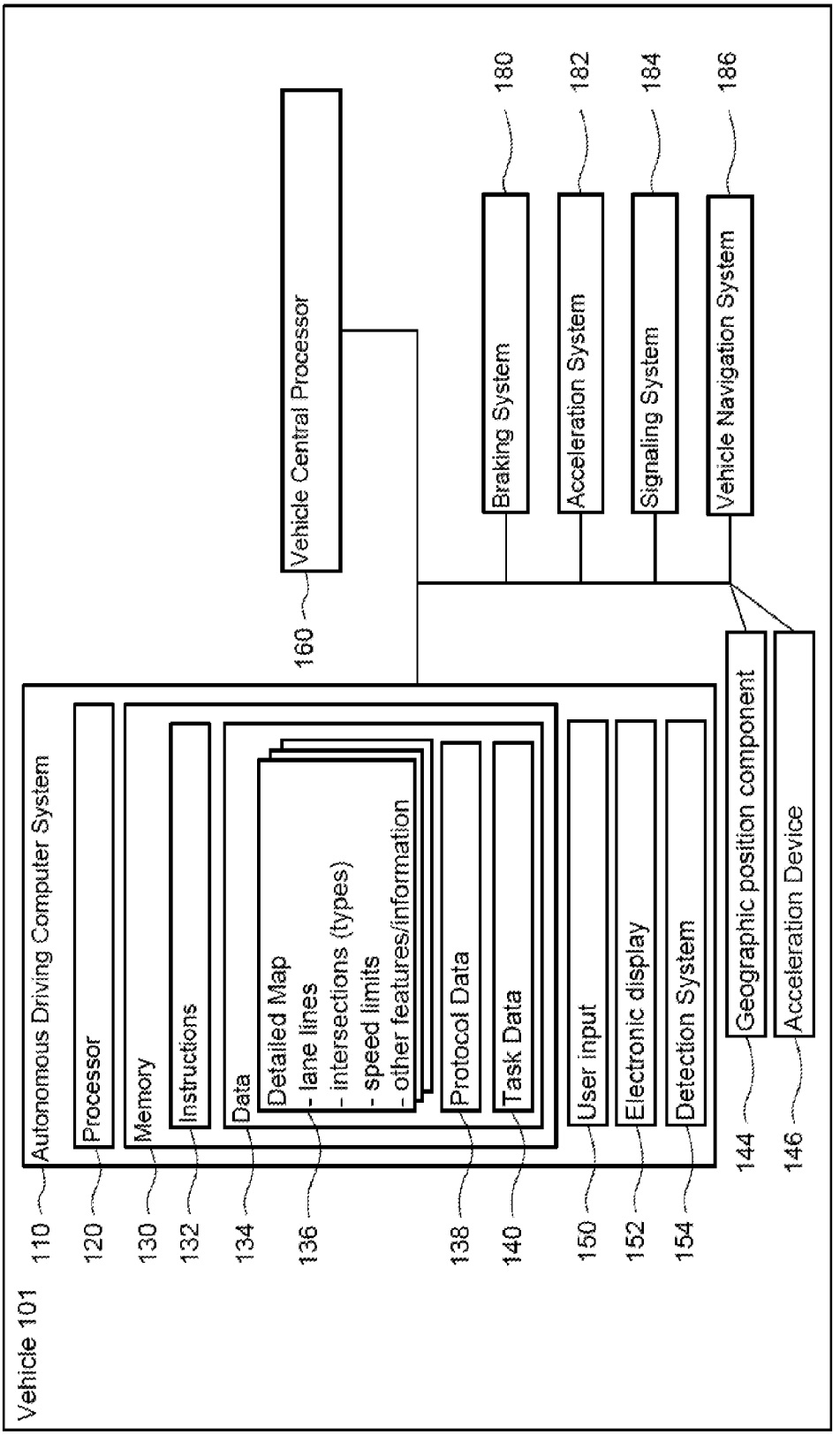
Vehicle 101
Autonomous Driving Computer System
110
Processor
120
Memory
130
Instructions
132
Data
134
Detailed Map
- lane lines
- intersections (types)
- speed limits
- other features/information
136
Protocol Data
138
Task Data
140
User input
150
Electronic display
152
Detection System
154
Geographic position component
144
Acceleration Device
146
Vehicle Central Processor
160
Braking System
180
Acceleration System
182
Signaling System
184
Vehicle Navigation System
186

FIGURE 1 100

FIGURE 2

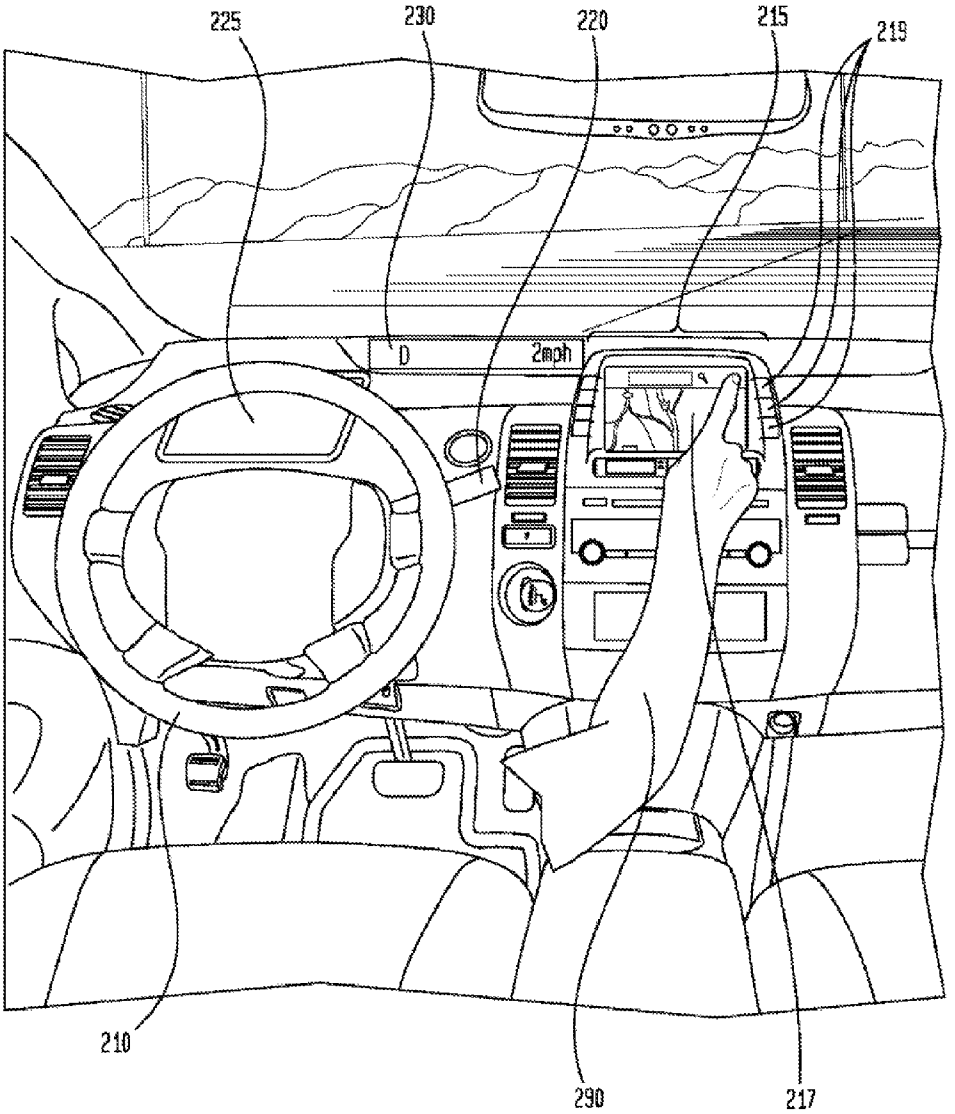

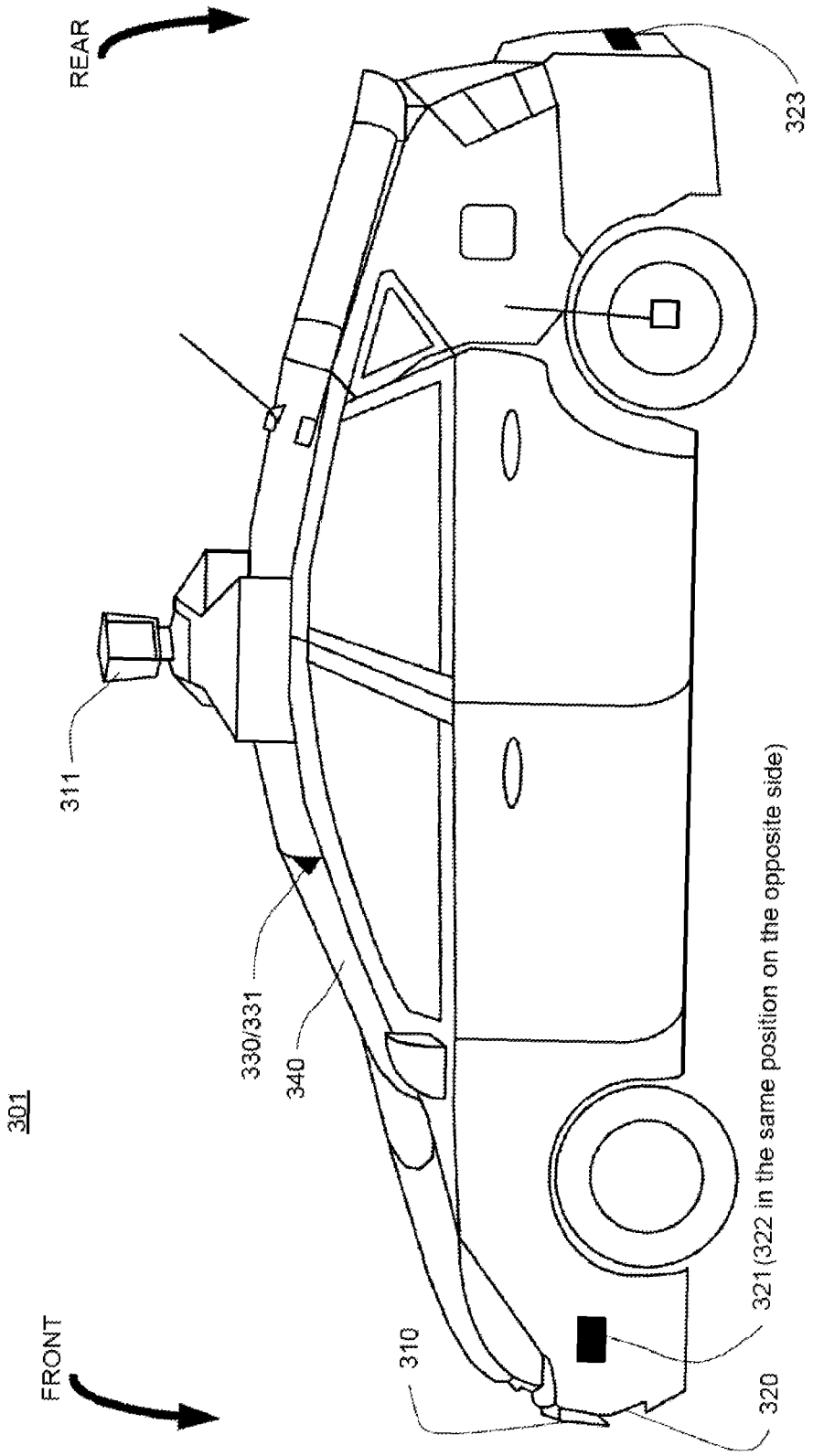
REAR
FRONT
301
311
330/331
340
310
320
321 (322 in the same position on the opposite side)
323

FIGURE 3

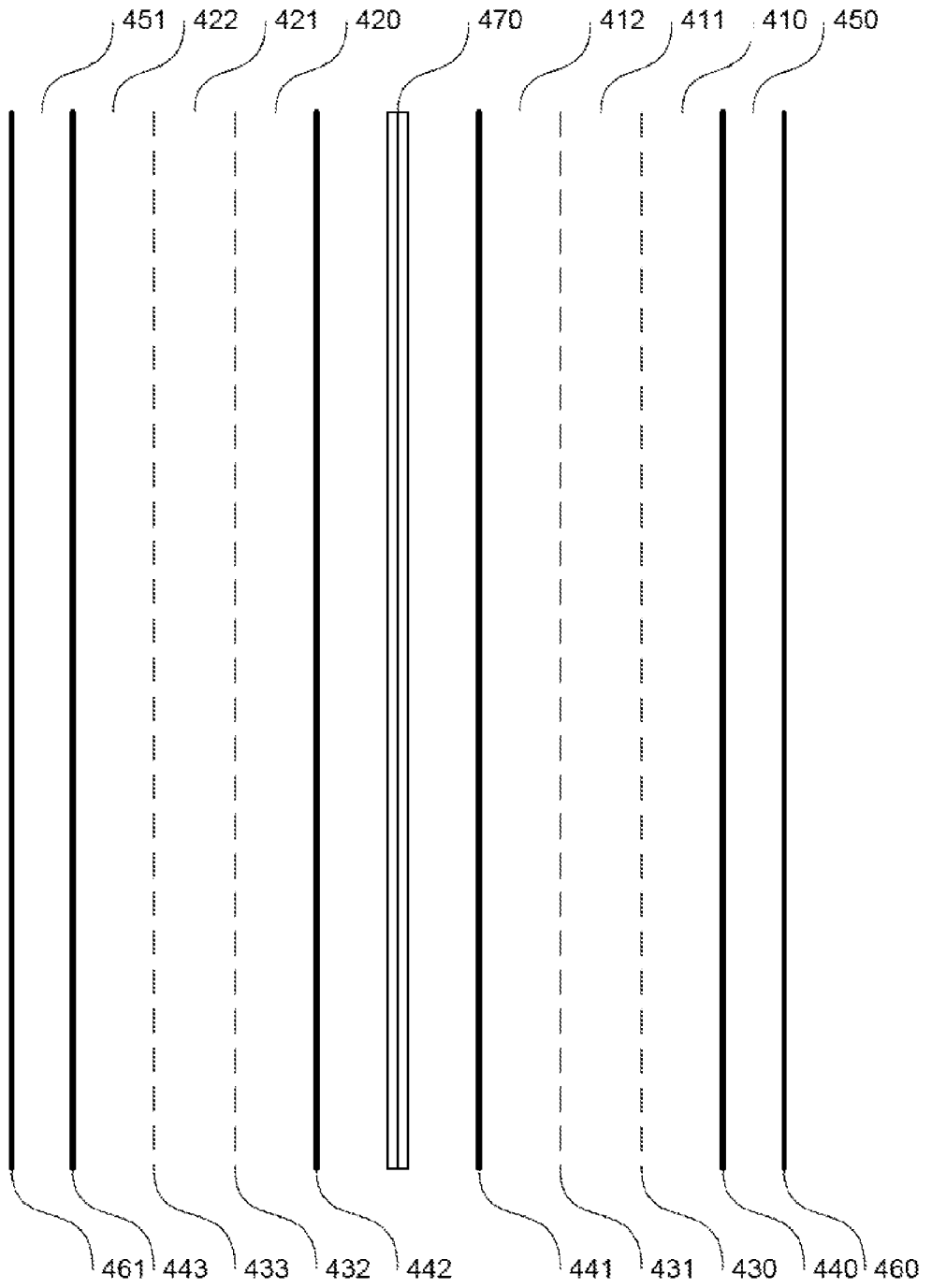
451
422
421
420
470
412
411
410
450
461
443
433
432
442
441
431
430
440
460

400

FIGURE 4

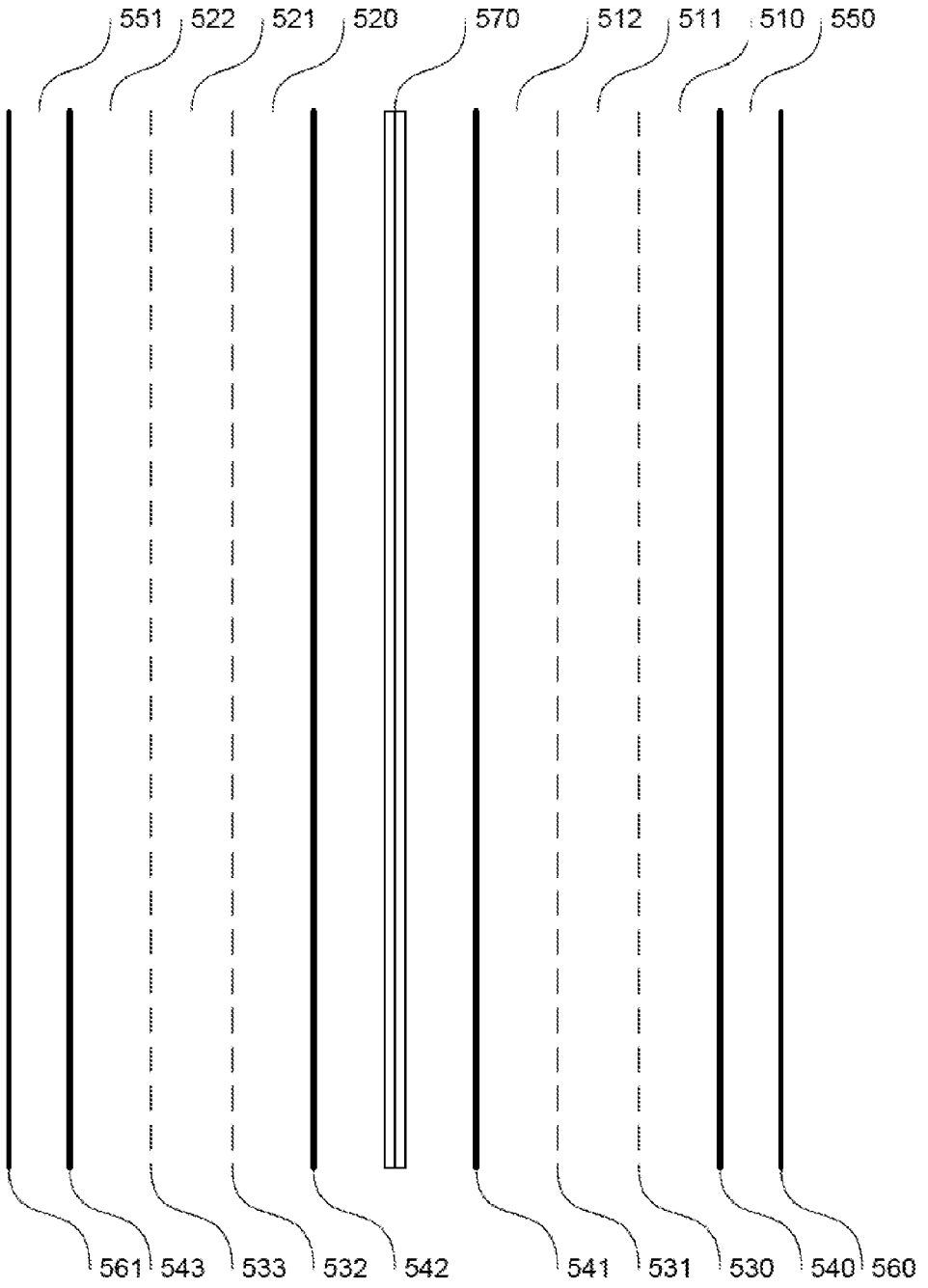
551
522
521
520
570
512
511
510
550
561
543
533
532
542
541
531
530
540
560

500

FIGURE 5

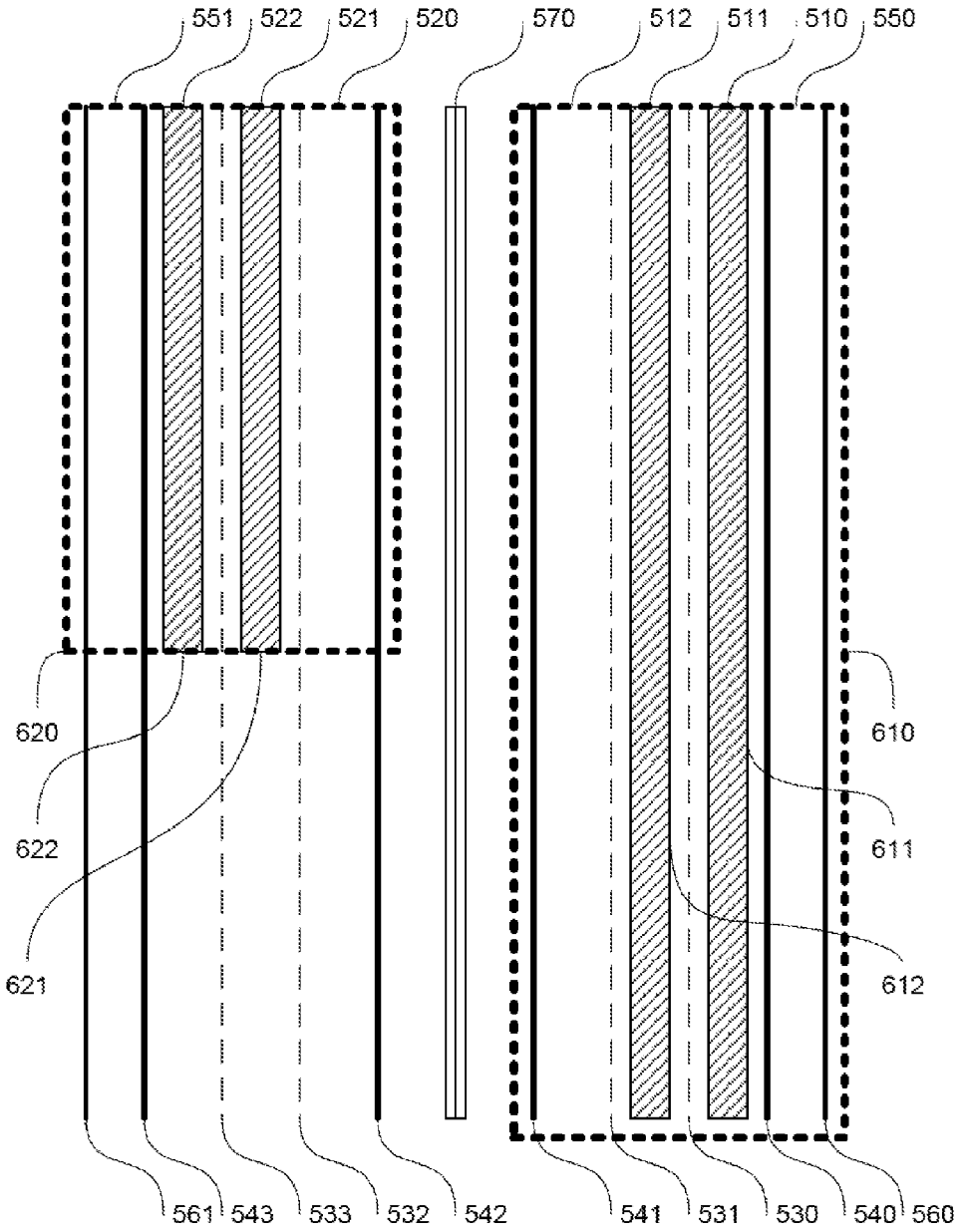
551
522
521
520
570
512
511
510
550
620
622
621
610
611
612
561
543
533
532
542
541
531
530
540
560

600

FIGURE 6

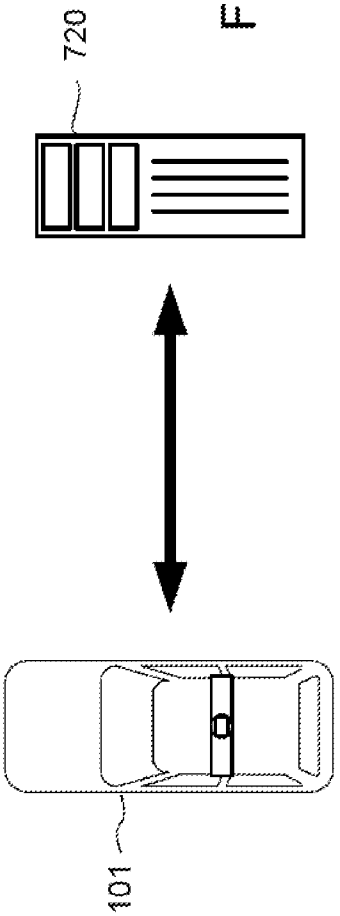

FIGURE 7A

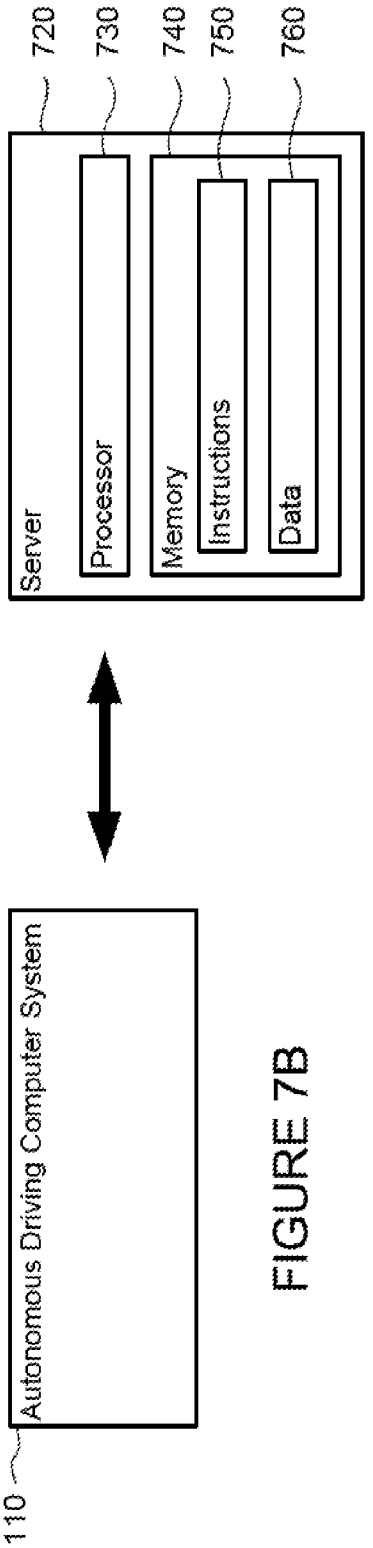

FIGURE 7B

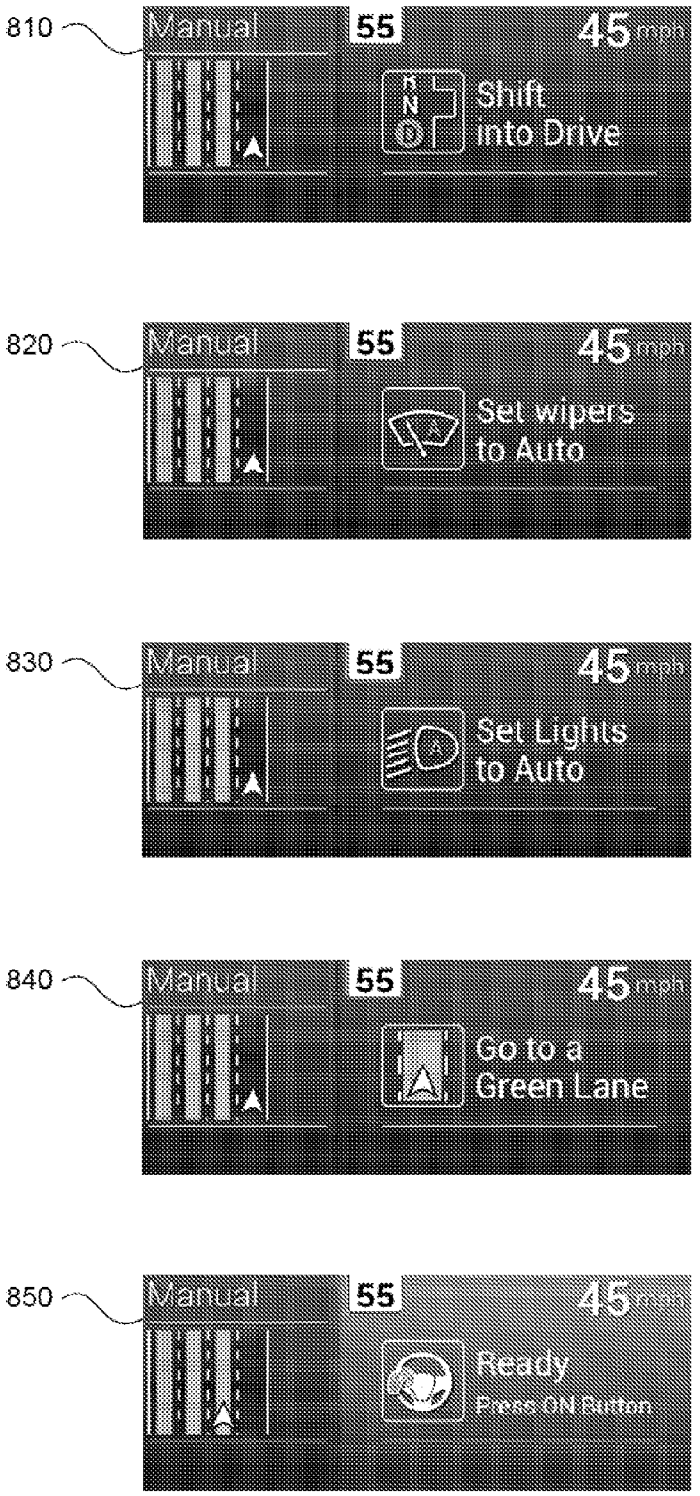
810
Manual
55
45 mph
R
N
D
Shift
into Drive
820
Manual
55
45 mph
Set wipers
to Auto
830
Manual
55
45 mph
Set Lights
to Auto
840
Manual
55
45 mph
Go to a
Green Lane
850
Manual
55
45 mph
Ready
Press ON Button

FIGURE 8

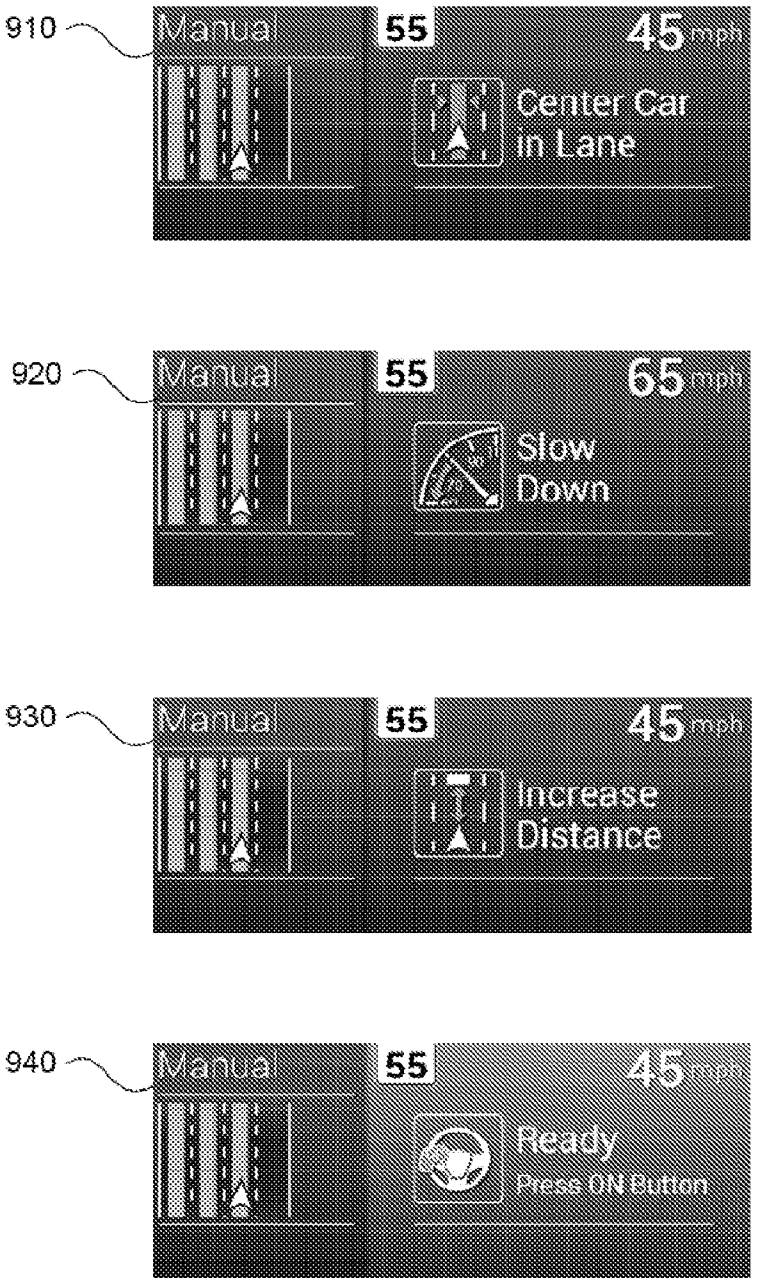
910
Manual
55
45 mph
Center Car in Lane
920
Manual
55
65 mph
Slow Down
930
Manual
55
45 mph
Increase Distance
940
Manual
55
45 mph
Ready
Press ON Button

FIGURE 9

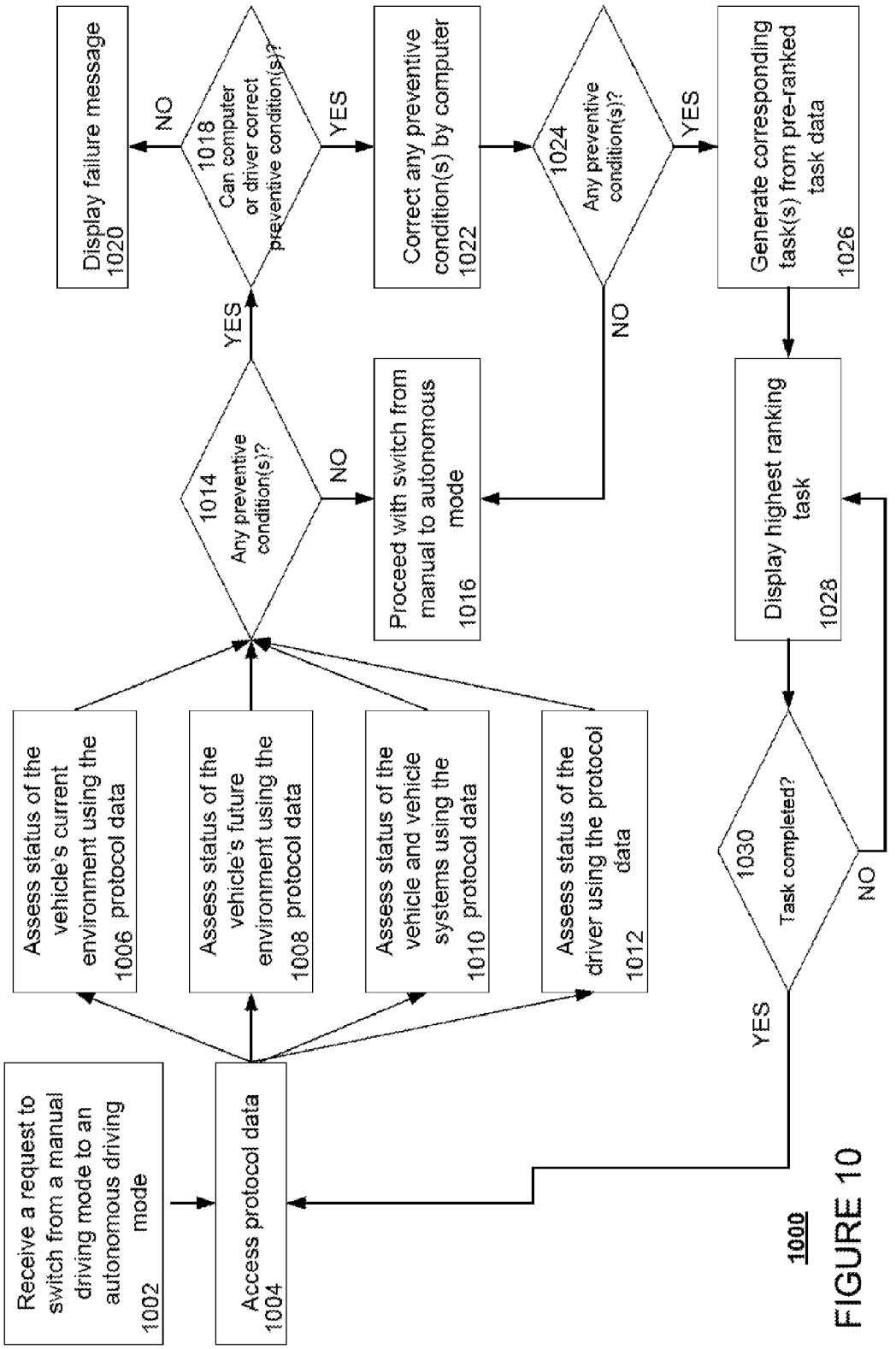
Receive a request to switch from a manual driving mode to an autonomous driving mode
1002
Access protocol data
1004
Assess status of the vehicle's current environment using the protocol data
1006
Assess status of the vehicle's future environment using the protocol data
1008
Assess status of the vehicle and vehicle systems using the protocol data
1010
Assess status of the driver using the protocol data
1012
1014
Any preventive condition(s)?
YES
NO
1018
Can computer or driver correct preventive condition(s)?
NO
YES
Display failure message
1020
Correct any preventive condition(s) by computer
1022
Proceed with switch from manual to autonomous mode
1016
1024
Any preventive condition(s)?
YES
NO
Generate corresponding task(s) from pre-ranked task data
1026
Display highest ranking task
1028
1030
Task completed?
YES
NO
1000

FIGURE 10

ENGAGING AND DISENGAGING FOR AUTONOMOUS DRIVING

CROSS REFERENCE TO RELATED APPLICATIONS

The present application claims the benefit of the filing date of U.S. Provisional Patent Application No. 61/731,717 filed Nov. 30, 2012, the entire disclosure of which is hereby incorporated herein by reference.

BACKGROUND

Autonomous vehicles use various computing systems to aid in the transport of passengers from one location to another. Some autonomous vehicles may require some initial input or continuous input from an operator, such as a pilot, driver, or passenger. Other systems, for example autopilot systems, may be used only when the system has been engaged, which permits the operator to switch from a manual driving mode (where the operator exercises a high degree of control over the movement of the vehicle) to an autonomous driving mode (where the vehicle essentially drives itself) to modes that lie somewhere in between.

BRIEF SUMMARY

Aspects of the disclosure provide a method. In such aspects, the method includes receiving a request to switch a vehicle from a manual driving mode to an autonomous driving mode. In response, protocol data is accessed. This protocol data is used by a processor to assess the status of the vehicle's environment, the vehicle and systems of the vehicle, and a driver and identify one or more conditions. The method also includes accessing task data which associates conditions with tasks that may be performed by a driver to change the condition. The task data is used to generate a set of tasks. Each task of the set of tasks is displayed in an ordered sequence. Once the tasks are complete, the switch from the manual driving mode to the autonomous driving mode may proceed.

In one example, assessing the status of the vehicle's environment, the vehicle and systems of the vehicle, and a driver includes accessing sensor data, accessing detailed map information, communicating with various systems of the vehicle, and communicating with a remote computer.

The assessments may include, for example, one or more of determining whether the current or future weather would make autonomous driving unsafe, uncomfortable for the vehicle's passengers or damage the vehicle, whether the vehicle's actual location agrees with the vehicle's location relative to the detailed map information, whether data received from the sensors of the detection system agrees with the corresponding detailed map information, whether the vehicle is currently driving in an area pre-approved for initiating the autonomous mode, whether the vehicle is currently driving in a lane pre-approved for initiating the autonomous mode, whether the roadway is paved (as opposed to dirt), whether the road is wide enough (as opposed to being too narrow for two vehicles to pass one another), whether the vehicle is on a straight roadway (as opposed to driving around a curve, down or up a hill, etc.), whether the vehicle is sufficiently centered in the lane, whether the vehicle is surrounded by or boxed in by other vehicles (for example, in dense traffic conditions), whether the vehicle is currently in a school zone, whether the vehicle is facing oncoming traffic (for example, driving northbound in a southbound lane according to the detailed map information), whether another vehicle is pulling into the

vehicle's lane proximate to the vehicle, whether the vehicle is at least some pre-determined minimum distance from other vehicles or moving objects in the roadway, whether the vehicle must make any small maneuvers to avoid non-moving or slow moving objects in the roadway, whether the vehicle is traveling too fast or too slow, whether any upcoming maneuvers would prevent a switch from manual to autonomous driving mode, whether the vehicle can be driving in the autonomous mode for a minimum period of time before a switch to manual mode is required, whether the various features of the autonomous driving system of vehicle are working properly, whether the vehicle has met minimum maintenance standards (for example, oil changes are up to date), whether the vehicle's tires are properly inflated, whether the vehicle's doors are closed, whether the vehicle is currently in "drive" (as opposed to "neutral," "reverse," or "park"), whether the vehicle is in two wheel drive (for example, on a vehicle which allows for the driver to manually switch into four wheel or all wheel drive), whether the vehicle's automatic wipers are currently on, whether the vehicle's headlights or fog lights are on, and whether no other warning indicators (such as check engine lights) are currently active, and whether the driver's seatbelt is properly buckled.

Other conditions that prevent a switch from manual to autonomous mode may include that the vehicle is not in "drive," that the automatic wipers are not on, that the automatic lights are not on, and that the vehicle is not in a lane pre-approved for initiating autonomous driving. In such cases, the generated set of tasks may include putting the vehicle in drive, turning on automatic wipers, turning on automatic lights, and moving the vehicle to a lane pre-approved for initiating autonomous driving. In this example, the sequence of displayed tasks includes a first displayed task for putting the vehicle in drive, a second displayed task for turning on automatic wipers, a third displayed task turning on automatic lights, and a fourth displayed task moving the vehicle a lane pre-approved for initiating autonomous driving. The first displayed task is displayed until confirmed completed. When the first displayed task is completed, the second displayed task is displayed until the second task is completed. When the second displayed task is completed, the third displayed task is displayed until the third task is completed. When the third displayed task is completed, the fourth displayed task is displayed until the fourth task is completed.

In another example, the preventive conditions may include that the vehicle is not in "drive," that the automatic wipers are not on, that the automatic lights are not on, that the vehicle is not in a lane pre-approved for initiating autonomous driving, that the vehicle is not centered in a lane, that the vehicle is then moving too fast, and that the vehicle is too close to another object in the roadway. In this example, the generated set of tasks may include putting the vehicle in drive, turning on automatic wipers, turning on automatic lights, moving the vehicle a lane pre-approved for initiating autonomous driving, centering the vehicle in the lane, slowing the vehicle down, and increasing the distance between the vehicle and the another object in the roadway.

In another example, the method also includes, before using the task data to generate the set of tasks, correcting by the processor any of the identified one or more conditions pre-approved for correction by the processor. In another example, assessing the status is performed continuously while the tasks are being completed. In this regard, additional conditions may be identified and used to add additional tasks to the set of tasks.

In another example, the method may also include, after switching to the autonomous driving mode, maneuvering the

vehicle in the autonomous driving mode and receiving a request to switch from the autonomous driving mode to the manual driving mode. This request may be not recommended or denied when the vehicle is performing an action that cannot be safely or easily transferred to the driver before the action is complete. In this example and in response to an indication by the user that the user wants to return to manual mode, a warning may be displayed to the driver when switching to manual driving mode is not recommended.

Other aspects of the disclosure provide systems including a processor which performs some or all of the various features of the methods described above. Further aspects of the disclosure provide a non-transitory, tangible computer-readable storage medium on which computer readable instructions of a program are stored. The instructions, when executed by a processor, cause the processor to perform some or all of the various features of the methods described above.

BRIEF DESCRIPTION OF THE DRAWINGS

FIG. **1** is a functional diagram of a system in accordance with aspects of the disclosure.

FIG. **2** is an interior of an autonomous vehicle in accordance with aspects of the disclosure.

FIG. **3** is an exterior of an autonomous vehicle in accordance with aspects of the disclosure.

FIG. **4** is an illustration of a highway used by way of example in accordance with aspects of the disclosure.

FIG. **5** is an example of map information in accordance with aspects of the disclosure.

FIG. **6** is another example of map information in accordance with aspects of the disclosure.

FIG. **7**A is a pictorial diagram of a system in accordance with aspects of the disclosure.

FIG. **7**B is a functional diagram of a system in accordance with aspects of the disclosure.

FIG. **8** is a series of screen images in accordance with aspects of the disclosure.

FIG. **9** is a series of screen images in accordance with aspects of the disclosure.

FIG. **10** is a flow diagram in accordance with aspects of the disclosure.

DETAILED DESCRIPTION

A vehicle may make a variety of determinations before allowing a driver to operate a vehicle in an autonomous driving mode, such as handing off control of the vehicle to the vehicle's computer, or allowing the driver to switch from the autonomous driving mode to the manual driving mode. This may include conducting a series of environmental, system, and driver checks and also providing a driver with a checklist of tasks before allowing the driver to hand off control of the vehicle to the vehicle's computer.

In one example, a computer associated with a vehicle having an autonomous driving mode and a manual driving mode may receive a request to switch from a manual driving mode to an autonomous driving mode. The computer may then respond by accessing protocol data and using it to assess status of the vehicle's current environment, the vehicle's likely future environment, the vehicle, and the driver. The computer may then determine if these assessments have identified any conditions that the system uses to prevent vehicle from being placed into an autonomous driving mode (hereafter, "preventive conditions"). If not, the computer may proceed with the switch from the manual to the autonomous driving mode.

If, as a result of the assessments, the computer identifies one or more preventive conditions, the computer may determine whether the computer or driver can change those identified conditions immediately or within a certain period of time. If the preventive conditions cannot be so changed, the computer may display a failure message to the driver. In some examples, this failure message may indicate the particular issue for the failure.

If the computer can change the identified preventive conditions, the computer may take the actions necessary to do so. Even if the computer is otherwise capable of changing the preventive condition, the vehicle may be designed to require the driver to change the condition. For example, the driver may be in a better position to assess if and how the preventive condition can be changed. If no identified preventive conditions remain, the computer may proceed with the switch from the manual to the autonomous driving mode.

If after the computer corrects any of the preventive conditions other preventive conditions remain, the computer may generate a corresponding task or task for each of the remaining problem conditions. The computer may then display the tasks in order of priority to the driver. For example, the computer may be programmed to always display the tasks one at a time in a predetermined order, or dynamically determine the order in which the remaining tasks should be displayed. Once the task is completed, the computer may display the next task for completion. The compute may continue to display the tasks until each is corrected, and the computer may then proceed with the switch from manual to autonomous driving mode. In addition, this list may be recomputed periodically such that if one of the steps is completed while another step is being shown, then the completed task may be removed.

While the driver is performing the tasks, the computer may continue to make the aforementioned assessments to identify any additional preventive conditions. These conditions may then cause the computer to display the error message, correct the additional preventive conditions, or generate and display additional tasks for completion by the driver. Again, if all of the preventive conditions have been corrected, the computer may proceed with the switch from the manual to the autonomous driving mode.

The computer may similarly make assessments to determine whether switching the vehicle from the autonomous driving mode to the manual driving mode is not currently recommended.

As shown in FIG. **1**, an autonomous driving system **100** in may include a vehicle **101** with various components. While certain aspects of the disclosure are particularly useful in connection with specific types of vehicles, the vehicle may be any type of vehicle including, but not limited to, cars, trucks, motorcycles, busses, boats, airplanes, helicopters, lawnmowers, recreational vehicles, amusement park vehicles, farm equipment, construction equipment, trams, golf carts, trains, and trolleys. The vehicle may have one or more computers, such as computer **110** containing a processor **120**, memory **130** and other components typically present in general purpose computers.

The memory **130** stores information accessible by processor **120**, including instructions **132** and data **134** that may be executed or otherwise used by the processor **120**. The memory **130** may be of any type capable of storing information accessible by the processor, including a computer-readable medium, or other medium that stores data that may be read with the aid of an electronic device, such as a hard-drive, memory card, ROM, RAM, DVD or other optical disks, as well as other write-capable and read-only memories. Systems and methods may include different combinations of the fore-

going, whereby different portions of the instructions and data are stored on different types of media.

The instructions **132** may be any set of instructions to be executed directly (such as machine code) or indirectly (such as scripts) by the processor. For example, the instructions may be stored as computer code on the computer-readable medium. In that regard, the terms "instructions" and "programs" may be used interchangeably herein. The instructions may be stored in object code format for direct processing by the processor, or in any other computer language including scripts or collections of independent source code modules that are interpreted on demand or compiled in advance. Functions, methods and routines of the instructions are explained in more detail below.

The data **134** may be retrieved, stored or modified by processor **120** in accordance with the instructions **132**. For instance, although the claimed subject matter is not limited by any particular data structure, the data may be stored in computer registers, in a relational database as a table having a plurality of different fields and records, XML documents or flat files. The data may also be formatted in any computer-readable format. By further way of example only, image data may be stored as bitmaps comprised of grids of pixels that are stored in accordance with formats that are compressed or uncompressed, lossless (e.g., BMP) or lossy (e.g., JPEG), and bitmap or vector-based (e.g., SVG), as well as computer instructions for drawing graphics. The data may comprise any information sufficient to identify the relevant information, such as numbers, descriptive text, proprietary codes, references to data stored in other areas of the same memory or different memories (including other network locations) or information that is used by a function to calculate the relevant data.

The processor **120** may be any conventional processor, such as commercially available CPUs. Alternatively, the processor may be a dedicated device such as an ASIC or other hardware-based processor. Although FIG. **1** functionally illustrates the processor, memory, and other elements of computer **110** as being within the same block, it will be understood by those of ordinary skill in the art that the processor, computer, or memory may actually comprise multiple processors, computers, or memories that may or may not be stored within the same physical housing. For example, memory may be a hard drive or other storage media located in a housing different from that of computer **110**. Accordingly, references to a processor or computer will be understood to include references to a collection of processors or computers or memories that may or may not operate in parallel. Rather than using a single processor to perform the steps described herein, some of the components, such as steering components and deceleration components, may each have their own processor that only performs calculations related to the component's specific function.

In various aspects described herein, the processor may be located remote from the vehicle and communicate with the vehicle wirelessly. In other aspects, some of the processes described herein are executed on a processor disposed within the vehicle and others by a remote processor, including taking the steps necessary to execute a single maneuver.

Computer **110** may include all of the components normally used in connection with a computer such as a central processing unit (CPU), memory (e.g., RAM and internal hard drives) storing data **134** and instructions such as a web browser, an electronic display **152** (e.g., a monitor having a screen, a small LCD touch-screen or any other electrical device that is operable to display information), user input **150** (e.g., a mouse, keyboard, touch screen and/or microphone), as well as various sensors (e.g., a video camera) for gathering explicit (e.g., a gesture) or implicit (e.g., "the person is asleep") information about the states and desires of a person.

In one example, computer **110** may be an autonomous driving computing system incorporated into vehicle **101**. FIG. **2** depicts an exemplary design of the interior of an autonomous vehicle. The autonomous vehicle may include all of the features of a non-autonomous vehicle, for example: a steering apparatus, such as steering wheel **210**; a navigation display apparatus, such as navigation display **215** (which may be a part of electronic display **152**); and a gear selector apparatus, such as gear shifter **220**. The vehicle may also have various user input devices **140** in addition to the foregoing, such as touch screen **217** (which may be a part of electronic display **152**), or button inputs **219**, for activating or deactivating one or more autonomous driving modes and for enabling a driver or passenger **290** to provide information, such as a navigation destination, to the autonomous driving computer **110**.

The autonomous driving computing system may be capable of communicating with various components of the vehicle. For example, returning to FIG. **1**, computer **110** may be in communication with the vehicle's central processor **160** and may send and receive information from the various systems of vehicle **101**, for example the braking system **180**, acceleration system **182**, signaling system **184**, and navigation system **186** in order to control the movement, speed, etc. of vehicle **101**. In one example, the vehicle's central processor **160** may perform all of the functions of a central processor in a non-autonomous computer. In another example, processor **120** and **160** may comprise a single processing device or multiple processing devices operating in parallel.

In addition, when engaged, computer **110** may control some or all of these functions of vehicle **101** and thus be fully or partially autonomous. It will be understood that although various systems and computer **110** are shown within vehicle **101**, these elements may be external to vehicle **101** or physically separated by large distances.

The vehicle may also include a geographic position component **144** in communication with computer **110** for determining the geographic location of the device. For example, the position component may include a GPS receiver to determine the device's latitude, longitude and/or altitude position. Other location systems such as laser-based localization systems, inertial-aided GPS, or camera-based localization may also be used to identify the location of the vehicle. The location of the vehicle may include an absolute geographical location, such as latitude, longitude, and altitude as well as relative location information, such as location relative to other cars immediately around it, which can often be determined with better accuracy than absolute geographical location.

The vehicle may also include other devices in communication with computer **110**, such as an accelerometer, gyroscope or another direction/speed detection device **146** to determine the direction and speed of the vehicle or changes thereto. By way of example only, acceleration device **146** may determine its pitch, yaw or roll (or changes thereto) relative to the direction of gravity or a plane perpendicular thereto. The device may also track increases or decreases in speed and the direction of such changes. The device's provision of location and orientation data as set forth herein may be provided automatically to the user, computer **110**, other computers and combinations of the foregoing.

The computer **110** may control the direction and speed of the vehicle by controlling various components. By way of example, if the vehicle is operating in a completely autono-

mous driving mode, computer **110** may cause the vehicle to accelerate (e.g., by increasing fuel or other energy provided to the engine), decelerate (e.g., by decreasing the fuel supplied to the engine or by applying brakes) and change direction (e.g., by turning the front two wheels).

The vehicle may also include components for detecting objects external to the vehicle such as other vehicles, obstacles in the roadway, traffic signals, signs, trees, etc. The detection system **154** may include lasers, sonar, radar, cameras or any other detection devices which record data which may be processed by computer **110**. For example, if the vehicle is a small passenger vehicle, the car may include a laser mounted on the roof or other convenient location.

As shown in FIG. **3**, vehicle **101** may include a small passenger vehicle having lasers **310** and **311**, mounted on the front and top of the vehicle, respectively. Laser **310** may have a range of approximately 150 meters, a thirty degree vertical field of view, and approximately a thirty degree horizontal field of view. Laser **311** may have a range of approximately 50-80 meters, a thirty degree vertical field of view, and a 360 degree horizontal field of view. The lasers may provide the vehicle with range and intensity information which the computer may use to identify the location and distance of various objects. In one aspect, the lasers may measure the distance between the vehicle and the object surfaces facing the vehicle by spinning on its axis and changing its pitch.

The vehicle may also include various radar detection units, such as those used for adaptive cruise control systems. The radar detection units may be located on the front and back of the car as well as on either side of the front bumper. As shown in the example of FIG. **3**, vehicle **101** includes radar detection units **320-323** located on the side (only one side being shown), front and rear of the vehicle. Each of these radar detection units may have a range of approximately 200 meters for an approximately 18 degree field of view as well as a range of approximately 60 meters for an approximately 56 degree field of view.

In another example, a variety of cameras may be mounted on the vehicle. The cameras may be mounted at predetermined distances so that the parallax from the images of 2 or more cameras may be used to compute the distance to various objects. As shown in FIG. **3**, vehicle **101** may include 2 cameras **330-331** mounted under a windshield **340** near the rear view mirror (not shown). Camera **330** may include a range of approximately 200 meters and an approximately 30 degree horizontal field of view, while camera **331** may include a range of approximately 100 meters and an approximately 60 degree horizontal field of view.

In addition to the sensors described above, the computer may also use input from other sensors and features typical to non-autonomous vehicles. For example, these other sensors and features may include tire pressure sensors, engine temperature sensors, brake heat sensors, break pad status sensors, tire tread sensors, fuel sensors, oil level and quality sensors, air quality sensors (for detecting temperature, humidity, or particulates in the air), door sensors, lights, wipers, etc. This information may be provided directly from these sensors and features or via the vehicle's central processor **160**.

Many of these sensors provide data that is processed by the computer in real-time, that is, the sensors may continuously update their output to reflect the environment being sensed at or over a range of time, and continuously or as-demanded provide that updated output to the computer so that the computer can determine whether the vehicle's then-current direction or speed should be modified in response to the sensed environment.

In addition to processing data provided by the various sensors, the computer may rely on environmental data that was obtained at a previous point in time and is expected to persist regardless of the vehicle's presence in the environment. For example, returning to FIG. **1**, data **134** may include detailed map information **136**, e.g., highly detailed maps identifying the shape and elevation of roadways, lane lines, intersections, crosswalks, speed limits, traffic signals, buildings, signs, real time traffic information, vegetation, or other such objects and information. For example, the map information may include explicit speed limit information associated with various roadway segments. The speed limit data may be entered manually or scanned from previously taken images of a speed limit sign using, for example, optical-character recognition.

FIG. **4** is an example of a highway **400**. In this example, highway **400** includes 3 northbound lanes **410-412** and 3 southbound lanes **420-22** defined by broken lane lines **430-33** and solid lane lines **440-43**. Highway **400** also includes shoulders **450-51** defined between solid lane line **440** and barrier **460** and solid lane line **441** and barrier **461**, respectively. Between the northbound and southbound lanes, highway **400** includes a median **470**.

FIG. **5** is an example of map information **500** for highway **400** of FIG. **4**. Map information includes data indicating the location and orientation of the various features of highway **400**. For example, map information **500** includes northbound lane data **510-512** identifying northbound lanes **410-412** as well as southbound lane data **520-522** identifying southbound lanes **420-22**. Map information **500** also includes broken lane line data **530-33** and solid lane lines **540-43** representing broken lane lines **430-33** and solid lane lines **440-43**. Shoulders **450-51** are also represented by shoulder data **550-551**. Barriers **460-61** are represented by barrier data **560-61**, and median **470** is represented by median data **570**.

The map information may also include three-dimensional terrain maps incorporating one or more of objects listed above. For example, the vehicle may determine that another object, such as a vehicle, is expected to turn based on real-time data (e.g., using its sensors to determine the current GPS position of another vehicle and whether a turn signal is blinking) and other data (e.g., comparing the GPS position with previously-stored lane-specific map data to determine whether the other vehicle is within a turn lane).

The map information **136** may also include autodrive zones which are currently available for autonomous driving. Autodrive zones may include for examples, areas within the map information which have been pre-approved or otherwise designated for initiating driving in an autonomous driving mode. These areas may include, for example, specific lanes on a highway, residential streets, etc. In this regard, autodrive zones may include pre-determined autodrive lanes. Areas which may be excluded from autodrive zones may include, by way of example only, acceleration lanes, exit lanes, merges, intersections, toll booths, known construction zones, and school zones and portions of roadway near such areas. Although computer **110** may restrict initiating the autonomous driving mode in areas which are not designated as autodrive zones, the computer **110** may actually be fully capable of maneuvering the vehicle through such areas or actually initiating the autonomous driving mode.

For example, map information **600** of FIG. **600** includes map information **500** and also autodrive zones **610** and **620**. In this example, autodrive zone **610** includes the southbound lanes **430-32** (represented by southbound lane data **530-32**) of highway **400** while autodrive zone **620** includes only a portion of the northbound lanes **420-22** (represented by

northbound lane data **520-22**) of highway **400**. Autodrive zone **610** includes the zones of lanes **410-22** (represented by lanes **510-22**); however, in this example, only lanes **410** (**510**) and **411** (**511**) include autodrive lanes **611** and **612**, respectively. Similarly, autodrive zone **620** includes portions of the zones of lanes **420-22** (represented by lanes **520-22**); however, in this example, only lanes **421** (**521**) and **422** (**522**) include autodrive lanes **621** and **622**, respectively. Thus, not all portions of highway **400** are autodrive zones, and not all lanes within autodrive zones are autodrive lanes.

Although the detailed map information **136** is depicted herein as an image-based map, the map information need not be entirely image based (for example, raster). For example, the map information may include one or more roadgraphs or graph networks of information such as roads, lanes, intersections, and the connections between these features. Each feature may be stored as graph data and may be associated with information such as a geographic location whether or not it is linked to other related features. For example, a stop sign may be linked to a road and an intersection. In some examples, the associated data may include grid-based indices of a roadgraph to promote efficient lookup of certain roadgraph features.

Computer **110** may also receive or transfer information to and from other computers. For example, the map information stored by computer **110** (such as the examples of map information **500** and **600** shown in FIGS. **5** and **6**) may be received or transferred from other computers and/or the sensor data collected from the sensors of vehicle **101** may be transferred to another computer for processing as described herein. As shown in FIGS. **7**A and **7**B, data from computer **110** within vehicle **101** may be transmitted via a network to stationary computer **720** for further processing. Similarly, data from computer **720**, such as software updates or weather information as described below, may be transmitted via the network to computer **110**. The network, and intervening nodes, may comprise various configurations and protocols including the Internet, World Wide Web, intranets, virtual private networks, wide area networks, local networks, private networks using communication protocols proprietary to one or more companies, Ethernet, WiFi and HTTP, and various combinations of the foregoing. Such communication may be facilitated by any device capable of transmitting data to and from other computers, such as modems and wireless interfaces. In another example, data may be transferred by storing it on memory which may be accessed by or connected to computers **110** and **720**.

In one example, computer **720** may comprise a server having a plurality of computers, e.g., a load balanced server farm, that exchange information with different nodes of a network for the purpose of receiving, processing and transmitting the data to and from computer **110**. The server may be configured similarly to the computer **110**, with a processor **730**, memory **740**, instructions **750**, and data **760**.

As noted above, data **760** of server **720** may provide software updates and/or weather related information. For example, server **720** may provide software updates to computer **110** including, for example, updating the various data stored in memory **130** such as instructions **132**, detailed map information **136**, protocol data **138**, and/or task data **140**. In another example, server **720** may receive, monitor, store, update, and transmit various information related to weather. This information may include, for example, precipitation, cloud, and/or temperature information in the form of reports, radar information, forecasts, etc.

Computer **110** may use protocol data **138** for assessing whether changing to or from autodrive mode will be permitted based on an assessment of the status of the vehicle's environment, the vehicle, as well as the driver. As described in more detail below, computer **110** may use protocols **138** to identify preventive conditions and whether those preventive conditions may be corrected by the computer or the driver.

Task data **140** may include a series of tasks that can be performed by a driver controlling a vehicle such as vehicle **101**. As discussed in more detail below, these tasks may include closing a door, buckling a seatbelt, changing lanes, etc. Each task may be associated with a corresponding preventive condition such that the performance of the task by a driver of a vehicle will correct a preventive condition identified using protocol data **138**. In this regard, task data may be stored as a part of protocol data **138** or separately.

The computer **110** may determine a proper order for each task. In this regard, buckling a seatbelt may have a higher rank than changing lanes, as it would be unsafe for the driver to control the vehicle without wearing a seatbelt, etc. The task data may also include instructions and display data for presenting tasks to the driver. For ease of reference, this disclosure will refer to the ranking data as being part of the task data **140**, but the information required to determine the order of each task may be stored as part of protocol data **138**, elsewhere in data **134** and as part of the instructions **132**.

In addition to the operations described above and illustrated in the figures, various operations will now be described. It should be understood that the following operations do not have to be performed in the precise order described below. Rather, various steps can be handled in a different order or simultaneously, and steps may also be added or omitted.

In one example, a driver of vehicle **101** may activate the autonomous driving system **100** and use a user input **150** to request that the vehicle switch from a manual driving mode to an autonomous driving or autodrive mode. Before granting the request, the computer **110** may determine whether any conditions exist that will be used to prevent the switch. This may include accessing protocol data **138** and assessing the status of the vehicle's environment (current and likely future), the status of the vehicle and the vehicle systems, as well as the status of the driver to identify any preventive conditions. For example, preventive conditions may include conditions indicating that it might be unsafe to switch from manual to autonomous driving mode, that the vehicle is an area in which autonomous driving is prevented by law, or that vehicle is not designed for autonomous driving in the current environment (e.g., off-road travel).

The assessment of the status of the vehicle's environment may rely on information collected by the vehicle's various sensors, stored map information, as well as information from a remote computer. For example, the assessments may include determining the status of the weather in the vehicle's immediate environment and whether this information indicates that it would be safer for the driver to retain full control of the vehicle. This may include receiving weather data from computer **720** and/or detecting weather conditions from the vehicle's sensors. Generally, driver may be in a better position to navigate the vehicle than the computer **110** when there is heavy or accumulating precipitation such as rain, snow, hail, etc. Thus, under such weather conditions, computer **110** may identify a preventive condition.

Other current environmental assessments may include examining the current location and speed of the vehicle and determining whether the vehicle is at an acceptable location and speed for switching from manual to autonomous driving mode. The vehicle's location may be received or determined from data generated by geographic position component **144** and/or acceleration device **142**. This location may be com-

bined with data from the various sensors of the detection system **154** as well as map information **136**. For example, computer **110** may assess whether the vehicle's actual location agrees with the vehicle's location relative to the detailed map information, whether data received from the sensors of the detection system agrees with the corresponding detailed map information, whether the vehicle is currently driving in an autodrive zone, whether the vehicle is currently driving in an autodrive lane, whether the roadway is paved (as opposed to dirt), whether the road is wide enough (as opposed to being too narrow for two vehicles to pass one another), whether the vehicle is on a straight roadway (as opposed to driving around a curve, down or up a hill, etc.), whether the vehicle is sufficiently centered in the lane, whether the vehicle is surrounded by or boxed in by other vehicles (for example, in dense traffic conditions), whether the vehicle is currently in a school zone, whether the vehicle is facing oncoming traffic (for example, driving northbound in a southbound lane according to the map information **136**), whether another object is pulling into the vehicle's lane proximate to the vehicle, whether the vehicle is at least some pre-determined minimum distance from other vehicles or moving objects in the roadway, whether the vehicle must make any small maneuvers to avoid non-moving objects in the roadway, whether the vehicle is traveling too fast or too slow, etc. If any of these conditions are not true, computer **110** may identify that condition as a problem condition.

In addition to the vehicle's current environment, computer **110** may assess the driving environment that the vehicle is likely to encounter in the future. In this regard, rather than relying on data from the vehicle's detection system **154**, computer **110** may receive and/or access data from a remote computer, stored map information, and user input.

In one example, the computer **110** may assess whether any upcoming situations or maneuvers are likely to create a prevention condition. For instance, the computer may check the map data for upcoming prevention conditions if the driver were to maintain the vehicle's current trajectory or stay on a recommended route. The fact that a prevention condition is likely to occur in the future may, itself, be considered a prevention condition that will prevent the user from activating the autodrive mode.

The amount of time that is expected to elapse until the future prevention condition is likely to occur may be used to determine whether the user will be prevented from placing the vehicle into autodrive mode. In one example, there may be some minimum amount of time during which the vehicle can be driven autonomously before it reaches a location where manual driving mode would be required, such as at a traffic intersection or merge. The lane of the road may continue, but the current lane may cease to be an autodrive lane at the intersection. The computer may thus estimate, based on the speed of vehicle or other data (such as the road's speed limit), the amount of time it will take for the vehicle to reach the intersection. If the estimated duration is less than a threshold, the upcoming intersection may be considered a current prevention condition. The threshold may be predetermined or dynamically calculated. For example, the threshold may be set to approximately 50 seconds since users may consider it disruptive to put the car into autodrive mode and then be forced out of autodrive mode within a span of 50 seconds. The threshold may also be dynamically determined, i.e., the threshold may be increased in bad weather.

Computer **110** may also use protocol data **138** to assess the status of the vehicle and the vehicle's various systems and determine whether there is a prevention condition. For example, computer **110** may determine whether the various features of the autonomous driving system **100** are working properly. This may include communicating with a remote computer, such as computer **720**, to determine whether computer **110** has the most up to date software. In addition, computer **110** may also communicate with the various components of autonomous driving system **100** to ensure that both the computer **110** is able to communicate with these systems and also to determine whether those systems are working properly. For example, computer **110** may determine whether the various sensors of detection system **154** are working properly, responsive, properly calibrated, etc. In not, computer **110** may identify a problem condition.

In addition to communicating with the components of autonomous driving system **100**, computer **110** may also determine the status of the vehicle's various non-autonomous components. This may include querying the vehicle's central processor **160** for information regarding the status of the vehicle. In this regard, the vehicle's central processor **160** may be in communication with other vehicle features or sensors, such as the lights, drive system, tire pressure monitors, door sensors, etc.

Computer **110** may then use this information regarding the other vehicle features and sensors to make various assessments. For example, computer **110** may determine whether the vehicle has met minimum maintenance standards (for example, oil changes are up to date), whether the vehicle's tires are properly inflated, whether the vehicle's doors are closed, whether the vehicle is currently in "drive" (as opposed to "neutral," "reverse," or "park"), whether the vehicle is in two wheel drive (for example, on a vehicle which allows for the driver to manually switch into four wheel or all wheel drive), whether the vehicle's automatic wipers are currently on, whether the vehicle's headlights or fog lights are on, and whether no other warning indicators (such as check engine lights) are currently active. In not, computer **110** may identify a prevention condition.

Computer **110** may also use protocol data **138** to assess the status of the vehicle driver. For example, computer **110** may also query central processor **160** to determine whether the driver's seatbelt is properly buckled. Other examples may include using sensors or other methods to determine driver sleepiness, driver intoxication, or whether the driver is authorized or not to use the vehicle.

The assessments need not be organized into distinct environmental, vehicle, or driver conditions but may actually comprise a larger collection or list of features for assessment. Alternatively, some features identified as being associated with a particular status assessment may be associated with other status assessments or checked multiple times. For example, whether the driver door is open may be an assessment made as part of a vehicle status assessment as well as a driver status assessment.

The assessments made by computer **110** according to protocol data **138** may be performed in any order. In addition, many of these assessments may be made simultaneously, for example by multiple processors operating in parallel. The assessments may be made repeatedly before receiving an autodriving request (or a request to use the autodrive mode), may be made at the time of receiving an autodriving request, may be checked repeatedly after receiving an autodriving request, and any combination of the foregoing.

Once computer **110** has identified a prevention condition that would prevent the transition from manual to autonomous driving mode, the computer may determine whether the computer or the driver can take immediate corrective action. If not, the computer **110** may generate a notification to the driver informing him that the autonomous driving mode is currently

unavailable. This notification may also include information indicating the reason why the autonomous driving mode is unavailable. The notification may also be displayed to the driver, for example, using electronic display **152**.

For example, referring to the assessments regarding the status of the vehicle's environment, neither the computer **110** nor the driver could change current weather conditions. In this regard, computer **110** may generate and display a notification explaining that the autonomous driving mode is currently unavailable due to the weather conditions.

In another example, referring to the status of the vehicle, neither the computer **110** nor the driver may be able to immediately change vehicle maintenance issues, such as an oil change indicator, low tire pressure indicator, or other more serious issues with regard to the various sensors of detection system **154**. Similarly, neither computer **110** nor the driver may be able to immediately change a prevention condition caused by the failure of sensor to provide data. For example, if the computer **110** is unable to determine whether the driver is wearing his seatbelt, simply asking the driver may not be sufficient to ensure that the seatbelt is actually operational and that the driver is wearing it. Accordingly, neither computer **110** nor the driver may be able to correct such a problem condition, and again, computer **110** may generate and display a notification explaining that the autonomous driving mode is currently unavailable due to the prevention condition.

If the computer **110** is able to take corrective action to address the prevention condition, the computer may do so. For example, if the assessment of the vehicle's status indicates a problem with the vehicle's sensors which can be corrected by computer calibration, the computer **110** may recalibrate the sensors and continue with any items remaining to be assessed. In another example, if computer **110** determines that it does not have the most up to date software, this prevention condition may be corrected by getting a software update, for example, from computer **720**. In another example, computer **110** may correct some prevention conditions with a short delay. Various other problem conditions may also be corrected by computer **110**. In addition, the computer may also perform some or all of these corrective actions proactively, rather than waiting for the driver to request a switch from manual driving mode to autonomous driving mode. The computer corrective actions may also be performed in parallel with one another and/or in parallel with driver performed corrective actions.

While computer **110** may be capable of correcting many different problem conditions, it may be safer to request the driver to address at least some prevention conditions rather than computer **110**. In this regard, for at least some prevention conditions, computer **110** may use task data **140** to generate tasks for such conditions.

For example, referring to the status of the vehicle's environment, computer **110** may generate tasks for changing the vehicle's location and/or speed. Depending upon the prevention condition, these tasks may include moving the vehicle to an autodrive lane, centering the vehicle in a lane, creating a sufficient space between the vehicle and some other moving object in the roadway, and speeding up or slowing down the vehicle. Similarly, referring to the status of the vehicle, computer **110** may generate tasks for correcting prevention conditions with regard to an improperly closed or open door, using the gear shift to put the vehicle into "drive", turning on automatic wipers, turning on lights, etc. Regarding the status of the driver, the computer **110** may generate a task requesting the driver to put on his seatbelt, etc.

As noted above, each task generated by the computer **110** using the task data **140** may be ranked. Thus, after generating all of the required tasks to correct any identified prevention conditions, the computer **110** may use the rankings to order the tasks and then present the ordered tasks to the driver. This may allow the computer **100** to provide the checklist to the driver in an order that promotes safety and is consistent with prerequisites. For example, a driver might be instructed to put on his seatbelt before being asked to put the vehicle in "drive" and before asked to move to an autodrive lane.

Similarly, although the driver may be presented with multiple tasks at the same time, it may be more helpful to provide each task to the driver one at a time, waiting until each task has been completed before providing the driver with the next task. In addition, tasks which require a longer time to complete may need to be followed by another driver request to switch to the autonomous mode while other tasks which may be completed in a shorter time may not.

FIG. **8** depicts a series of screen images **810**, **820**, **830**, and **840** which may be displayed to a driver, for example on electronic display **152**. These screen images may identify tasks required to correct identified problem conditions. In this example, computer **110** has already determined that each of these prevention conditions should and can be corrected by the driver. The conditions include that the vehicle is not in "drive," that the automatic wipers are not on, that the automatic lights are not on, and that the vehicle that the vehicle is not in an autodrive lane. Thus, computer **110** has generated a set of tasks and associated screen images **810**, **820**, **830**, and **840**. As noted above, these tasks and screen images are presented in a certain order.

In this example, the first task includes shifting the vehicle into "drive" as shown in screen image **810**. Once the first task is completed by the driver, the computer **110** may determined that the corresponding condition has been corrected. As a result, the computer **110** may show the next task. In this example, the next task includes turning on automatic wipers as shown in screen image **820**. Again, once the task of screen image **820** is completed, the next task turning on automatic lights may be displayed as shown in screen image **830**. Once this task is completed, computer **110** may display the next task, moving to an autodrive lane, as shown in screen image **840**.

Accordingly, as described above, each screen image may be shown in sequence, one at a time, until each task **810**, **820**, **830**, and **840** has been completed and the computer determines that the corresponding prevention condition no longer apply.

Once the identified problem conditions have been corrected by the driver, the computer may allow the driver to switch from the manual driving mode to the autonomous driving mode. For example, once all of the required tasks have been completed by the driver (such as those shown by screen images **810**, **820**, **830**, and **840**), computer **110** may display a message, such as that shown in screen image **850**, indicating that the autonomous driving system **100** and computer **110** is ready to take control of the vehicle. In addition, computer **110** may change the color of all or a portion of the display to further indicate that the vehicle is ready for autonomous driving mode. In this regard, screen image **850** may include a different background color from screen images **810**, **820**, **830**, and **840**. Once ready, the computer may automatically switch from the manual driving mode to the autonomous driving mode or may wait for a further request from the driver to ensure the driver is actually ready.

Before switching from manual to autonomous driving mode, computer **110** may conduct the aforementioned assessments continuously. In this regard, even though the driver or computer **110** has corrected various impediments to placing

the vehicle in autodrive mode, new problems may arise (or as noted above, some problems may be corrected). For example, once the driver has moved the vehicle **101** into an autodrive lane in response to the task depicted by screen image **840** of FIG. **8**, the computer **110** may identify additional problems. In one example, these additional preventive conditions may include that the vehicle is not centered in a lane, that the vehicle is then moving too fast, and that the vehicle is too close to another object in the roadway.

Based on these additional conditions, computer **110** may generate additional tasks including centering the vehicle in the lane, slowing the vehicle down, and increasing the distance between the vehicle and the another object in the roadway. As with the example of FIG. **8**, computer **110** may also generate corresponding screen images to encourage the driver to correct each of the conditions. As shown in FIG. **9**, computer **110** may display to the driver, for example on electronic display **152**, a series of screen images **910**, **920**, and **930** identifying tasks to be completed by the driver. As with the example of FIG. **8**, each screen image may be displayed one at a time until the driver has completed the task and the computer determines that the corresponding condition has been corrected. Again, once the computer **110** determines that there are no remaining or newly identified preventive conditions, computer **110** may display a message, such as that shown in screen image **940**, indicating that the autonomous driving system **100** and computer **110** is ready to take control of the vehicle.

Flow diagram **100** of FIG. **10** is an example of some of the aspects described above which may be performed by a computer associated with a vehicle having an autonomous driving mode and a manual driving mode. For example, computer **110** of vehicle **101** may receive an autodrive request or a request to switch from a manual driving mode to an autonomous driving mode at block **1002**. The computer **110** then responds by accessing protocol data at block **1004**. The protocol data is then used to assess the status of the vehicle's current environment, the vehicle's future environment, the vehicle, and the driver at blocks **1006**, **1008**, **1010**, and **1012**, respectively. Again, these assessments may be conducted in any order. The computer **110** then determines if these assessments have identified any problem conditions at block **1014**. If not, the computer **110** proceeds with the switch from the manual to the autonomous driving mode at block **1016**.

If as a result of the assessments, the computer **110** does identify one or more preventive conditions, the computer determines whether the computer or a driver can correct those identified conditions at block **1018**. If the conditions cannot be corrected, the computer **110** displays a failure message to the driver at block **1020**. As noted above, this failure message may indicate the particular issue for the failure.

If the computer **110** or a driver can sufficiently promptly correct the identified problems, the computer may correct problems that can be corrected by the computer at block **1022**. If at block **1024** no identified preventive conditions remain, the computer **110** proceeds with the switch from the manual to the autonomous driving mode at block **1016**.

Returning to block **1024**, if after the computer corrects any of the problems, other problems remain, the computer **110** generates a corresponding task or task using pre-ranked task data for each of the remaining problems at block **1026**. The computer **100** then displays the highest ranking task for completion by the driver of vehicle **101** at block **1028**. The computer continues to display the task until it is completed at block **1030**. In this example, once the task is completed, the computer returns to block **1004** to access the protocol data and reassess the status of the various features of blocks **1006**, **1008**, **1010**, and **1012**. The process may continue until all of the identified problems are corrected and the computer **110** proceeds with the switch from manual to autonomous driving mode at block **1016**.

Alternatively, once a task is completed at block **1030**, the computer may simply display the next highest ranking task until all of the identified problem conditions are corrected. Once this occurs, the computer **110** proceeds with the switch from manual to autonomous driving mode.

Conducting the aforementioned assessments and performing corrective actions can prevent certain problems, such as potential safety issues, actions that the user would consider disruptive, actions that may damage the car over time, etc. For example, if computer **110** is unable to drive autonomously in a particular lane or a shoulder because of some known condition, it may be dangerous to begin driving autonomously in that location. In another example, if the vehicle is too close to another vehicle or driving too fast, switching directly into autonomous driving mode may cause the computer to slow the vehicle down immediately and dramatically. This may be uncomfortable and also disconcerting for the driver. In yet another example, if the vehicle is not sufficiently centered in a lane, computer **110** may surprise the driver by moving into a lane in which the driver did not intend to drive. Abrupt lane changes may make the driver nervous or uncomfortable. Thus, the features described herein allow the driver to maintain control until both the computer **110**, and the driver, are assured that it is safe to switch driving modes.

Once the vehicle is in the autonomous driving mode, if any conditions arise which require a switch to manual driving mode, computer **110** may continue at least some of the assessments as described above and also made other assessments regarding the continued safety of driving in autonomous driving mode. If any preventive conditions are identified which cannot or should not be corrected immediately by computer **110**, the computer **110** may inform the driver of the need to switch back into the manual driving mode. For example, if the computer **110** detects some emergency or some preventive condition such as a loss of communication with some component of the autonomous driving system, the computer **110** may immediately inform the driver of the need to switch to the manual driving mode. By doing so quickly, even when the preventive condition does not require immediate attention, the computer may provide the driver with as much time as possible to take control of the vehicle.

Under certain specific conditions, the computer **110** may also discourage the driver from switching from autonomous mode and into the manual driving mode. Each vehicle may include an emergency manual override that allows the driver to switch to the manual driving mode under any conditions, but under normal operation there may be instances where switching to manual mode is prevented or delayed.

For example, after the first few seconds in autonomous driving mode, the computer **110** may detect that the driver is attempting to disengage the autonomous driving mode, such as by turning the steering wheel or hitting the accelerator. Because the request to disengage occurs so quickly after the request to engage, the computer **110** may determine that the request to disengage was unintentional. In this regard, rather than automatically disengaging, computer **110** may provide a warning to the driver that the autonomous driving mode is disengaging and also continue to control some aspects of the vehicle until further actions by the driver, such as by continuing to turn the steering wheel or hit the accelerator, which indicate that the driver was indeed attempting to disengage the autonomous driving mode.

In another example, the computer **110** may prevent the driver from switching to manual driving mode when the vehicle is performing an action that cannot be easily transferred to the driver before the action is complete. For example, it may not be easy to safely return control to the driver in the middle of a sharp turn. In this regard, computer **110** may continuously make this assessment and provide a warning during those times when the computer determines that switching to manual driving mode would be unsafe or uncomfortable for the driver. This warning may be changed or removed during times when the computer determines that switching to manual driving mode would be safe and comfortable.

As these and other variations and combinations of the features discussed above can be utilized without departing from the subject matter as defined by the claims, the foregoing description of exemplary embodiments should be taken by way of illustration rather than by way of limitation of the subject matter as defined by the claims. It will also be understood that the provision of the examples described herein (as well as clauses phrased as "such as," "e.g.", "including" and the like) should not be interpreted as limiting the claimed subject matter to the specific examples; rather, the examples are intended to illustrate only some of many possible aspects.

The invention claimed is:

1. A method comprising:

receiving a request to switch a vehicle on a roadway from a manual driving mode to an autonomous driving mode;

in response to receiving the request, accessing protocol data;

using, by a processor, the protocol data to assess (i) the status of the vehicle's environment, (ii) the vehicle, and systems of the vehicle, and (iii) a driver;

identifying a set of driving conditions from a plurality of driving conditions based on one or more of the assessments, wherein each of the plurality of driving conditions is associated with a task that may be performed by a driver to change the condition;

generating, based on the set of driving conditions, a set of tasks;

displaying to a user of the vehicle the set of tasks in an ordered sequence; and

upon determining that all of the tasks of the set of tasks are completed, switching the vehicle from a manual driving mode to an autonomous driving mode.

2. The method of claim **1**, wherein at least one of the assessments includes:

accessing detailed map information;

communicating with various systems of the vehicle;

and communicating with a remote computer.

3. The method of claim **1**, wherein at least one of the assessments includes determining whether the current or future weather would make autonomous driving unsafe.

4. The method of claim **1**, wherein at least one of the assessments includes determining whether the vehicle's actual location agrees with the vehicle's location relative to the detailed map information.

5. The method of claim **1**, wherein at least one of the assessments includes determining whether data received from the sensors of the detection system agrees with the corresponding detailed map information.

6. The method of claim **1**, wherein at least one of the assessments includes determining whether the vehicle is currently driving in an area pre-approved for initiating the autonomous mode.

7. The method of claim **1**, wherein at least one of the assessments includes determining whether the roadway is paved.

8. The method of claim **1**, wherein at least one of the assessments includes determining the width of the roadway.

9. The method of claim **1**, wherein at least one of the assessments includes determining whether the vehicle is on a curved roadway.

10. The method of claim **1**, wherein at least one of the assessments includes determining, whether the vehicle is sufficiently centered in a lane.

11. The method of claim **1**, wherein at least one of the assessments includes determining whether the vehicle is facing oncoming traffic.

12. The method of claim **1**, wherein at least one of the assessments includes determining whether another vehicle is pulling into the vehicle's lane proximate to the vehicle.

13. The method of claim **1**, wherein at least one of the assessments includes determining whether any upcoming maneuvers would prevent a switch from manual to autonomous driving mode.

14. The method of claim **1**, wherein at least one of the assessments includes determining whether the vehicle can be driving in the autonomous mode for a minimum period of time before a switch to manual mode is required.

15. The method of claim **1**, wherein at least one of the assessments includes determining whether the vehicle has met a minimum maintenance standard.

16. The method of claim **1**, wherein at least one of the assessments includes determining whether the vehicle's automatic wipers are currently on.

17. The method of claim **1**, wherein at least one of the assessments includes determining whether the driver's seatbelt is properly buckled.

18. The method of claim **1**, wherein the set of tasks are displayed such that a first task of the set of tasks is displayed until the first task is completed, and after the first task is completed, a second task is displayed.

19. The method of claim **1**, further comprising before generating the set of tasks, correcting by the processor any of the set of driving conditions pre-approved for correction by the processor.

20. A non-transitory, tangible computer-readable storage medium on which computer readable instructions of a program are stored, the instructions, when executed by a processor, cause the processor to perform a method, the method comprising:

receiving a request to switch a vehicle on a roadway from a manual driving mode to an autonomous driving mode;

in response to receiving the request, accessing protocol data;

using the protocol data to assess (i) the status of the vehicle's environment, (ii) the vehicle, and systems of the vehicle, and (iii) a driver;

identifying a set of driving conditions from a plurality of driving conditions based on one or more of the assessments, wherein each of the plurality of driving conditions is associated with a task that may be performed by a driver to change the condition;

generating, based on the set of driving conditions, a set of tasks;

displaying to a user of the vehicle the set of tasks in an ordered sequence; and

upon determining that all of the tasks of the set of tasks are completed, switching the vehicle from a manual driving mode to an autonomous driving mode.

21. A system:

a processor configured to:

receive a request to switch a vehicle on a roadway from a manual driving mode to an autonomous driving mode;

in response to receiving the request, access protocol data;

use the protocol data to assess (i) the status of the vehicle's environment, (ii) the vehicle, and systems of the vehicle, and (iii) a driver;

identify a set of driving conditions from a plurality of driving conditions based on one or more of the assessments, wherein each of the plurality of driving conditions is associated with a task that may be performed by a driver to change the condition;

generate, based on the set of driving conditions, a set of tasks;

display to a user of the vehicle the set of tasks in an ordered sequence; and

upon determining that all of the tasks of the set of tasks are completed, switch the vehicle from a manual driving mode to an autonomous driving mode.

22. A method comprising:

receiving a request to switch a vehicle on a roadway from a manual driving mode to an autonomous driving mode;

examining, by a processor, a first driving condition including whether the vehicle is not sufficiently centered in a driving lane;

examining a second driving condition including whether the vehicle is driving at a predetermined speed;

examining a third driving condition including whether the vehicle is within a predetermined distance from another vehicle in the roadway;

generating, based on all of the first, second, and third examined driving conditions, a set of tasks;

upon determining that all of the tasks of the set of tasks are completed, switching the vehicle from a manual driving mode to an autonomous driving mode.

23. The method of claim **22**, further comprising

displaying to a user of the vehicle the set of tasks in an ordered sequence.

24. The method of claim **22**, wherein a first task of the set of tasks includes asking the driver to center the vehicle within the driving lane, and the first task is displayed before other tasks of the set of tasks.

25. The method of claim **22**, wherein a first task of the set of tasks includes requiring the driver to reduce or increase the speed of the vehicle, and the first task is displayed before other tasks of the set of tasks.

26. The method of claim **22**, wherein a first task of the set of tasks includes requiring the driver to maintain a minimum distance behind the other vehicle in the roadway, and the first task is displayed before other tasks of the set of tasks.

* * * * *