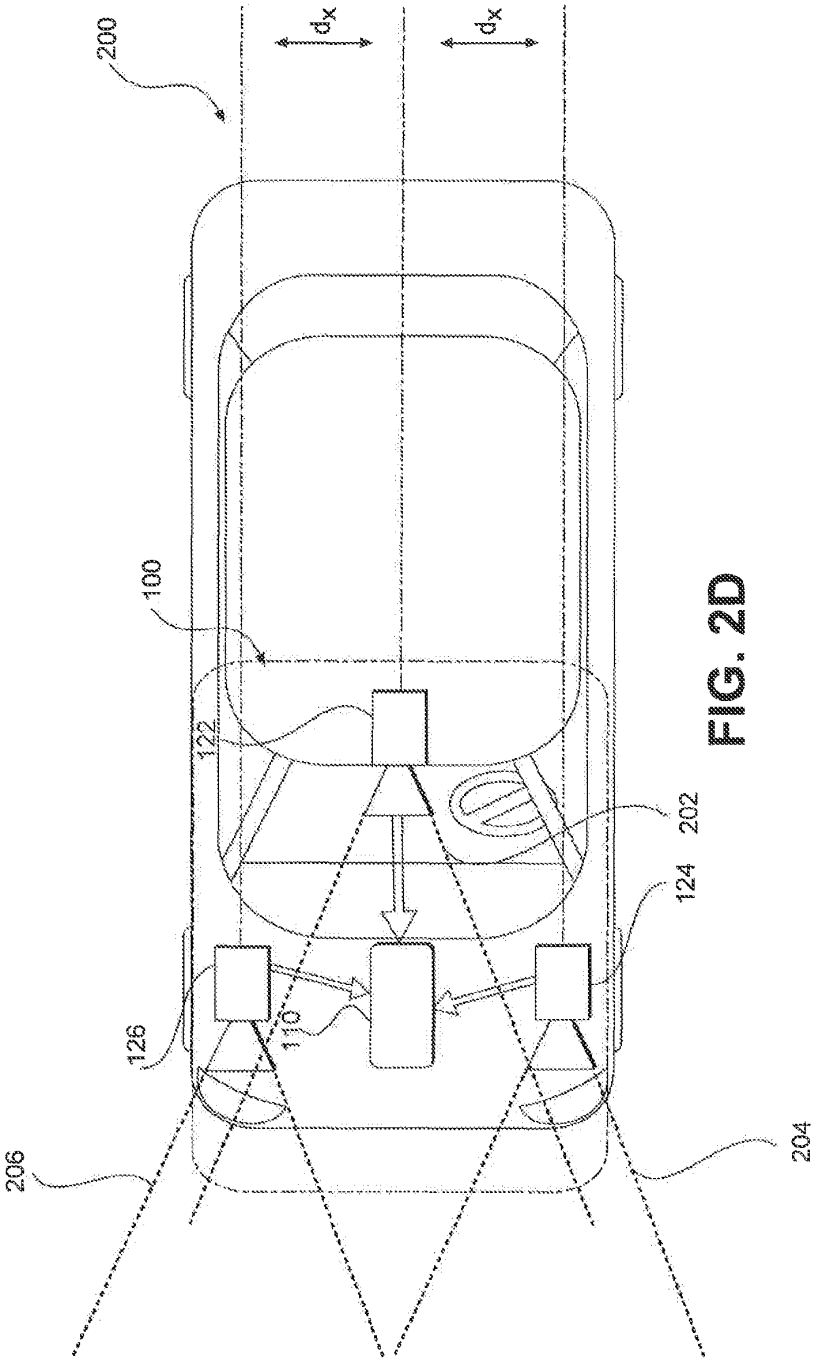

FIG. 2D

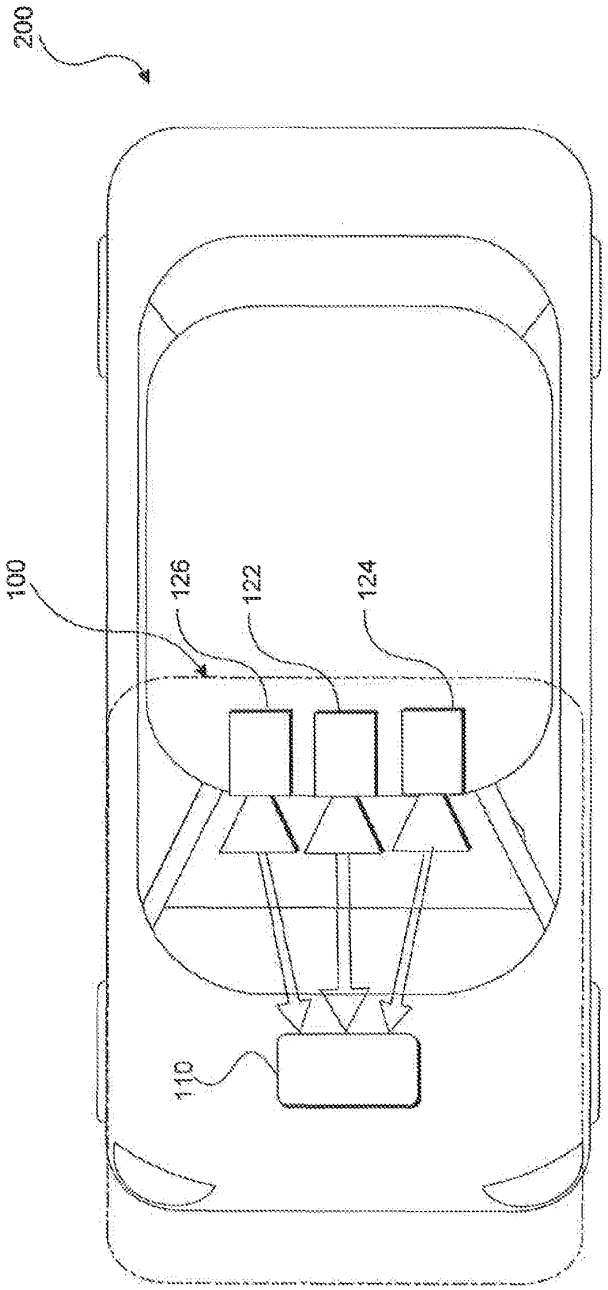

FIG. 2E

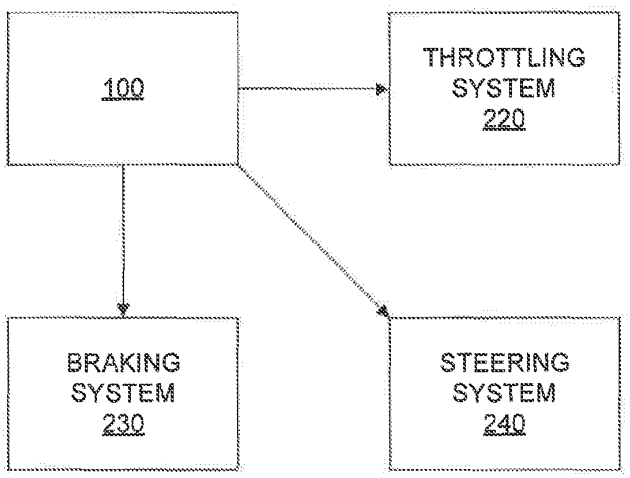
100
THROTTLING SYSTEM 220
BRAKING SYSTEM 230
STEERING SYSTEM 240

FIG. 2F

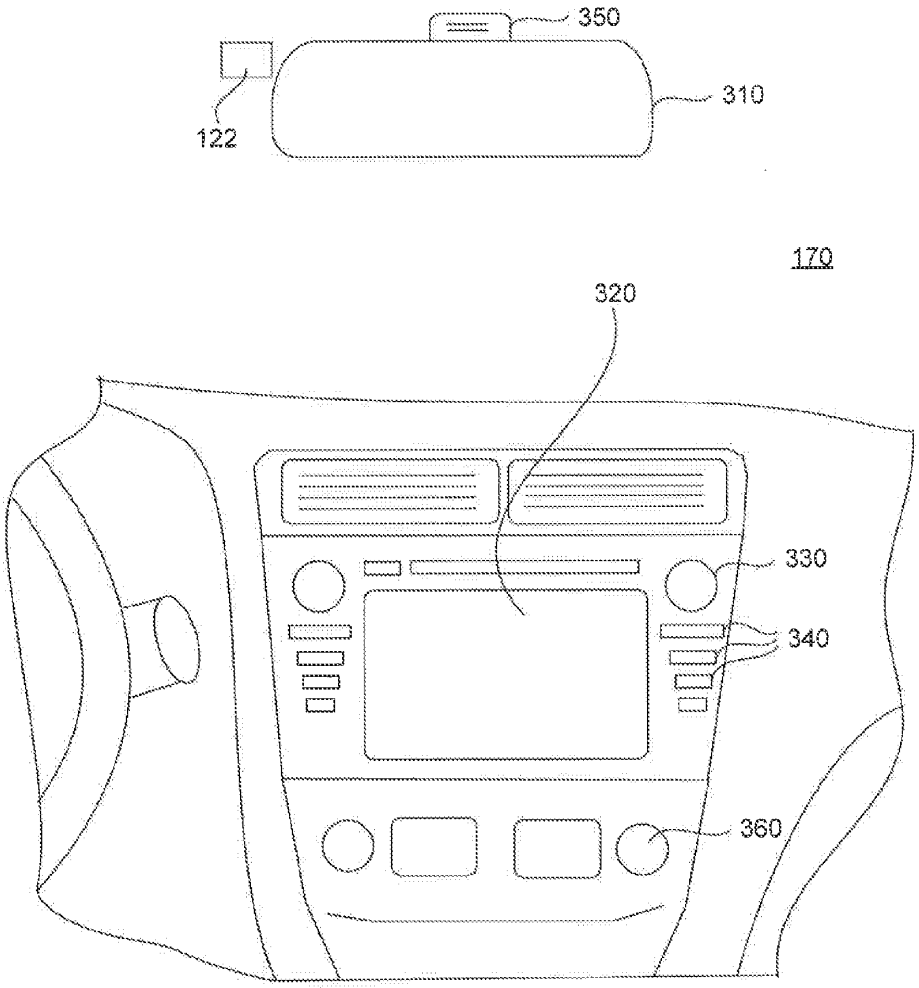

FIG. 3A

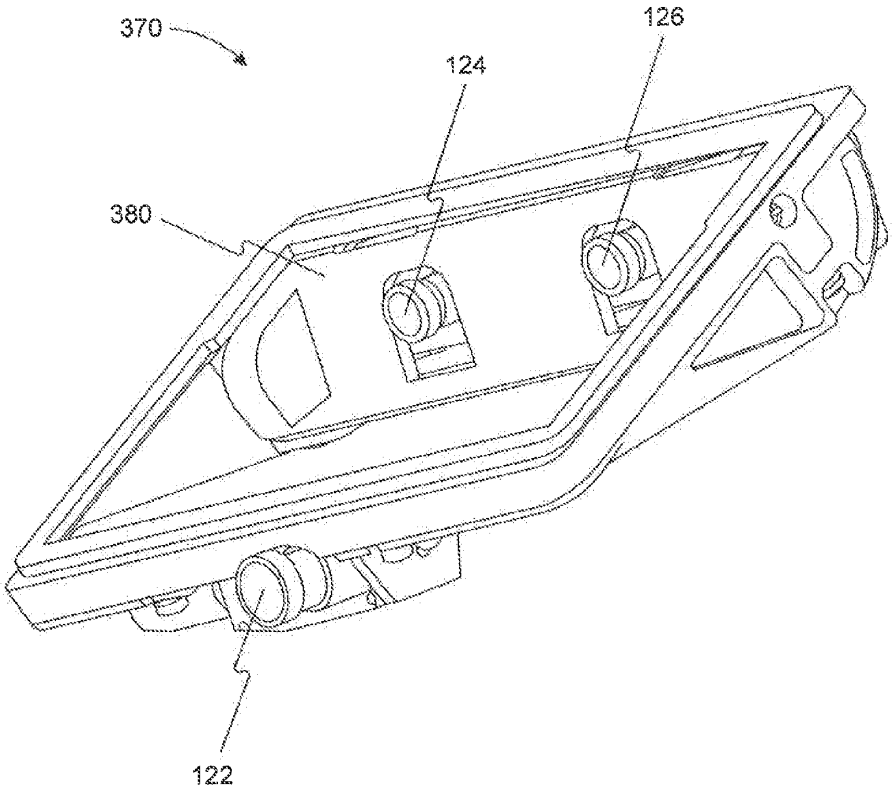

FIG. 3B

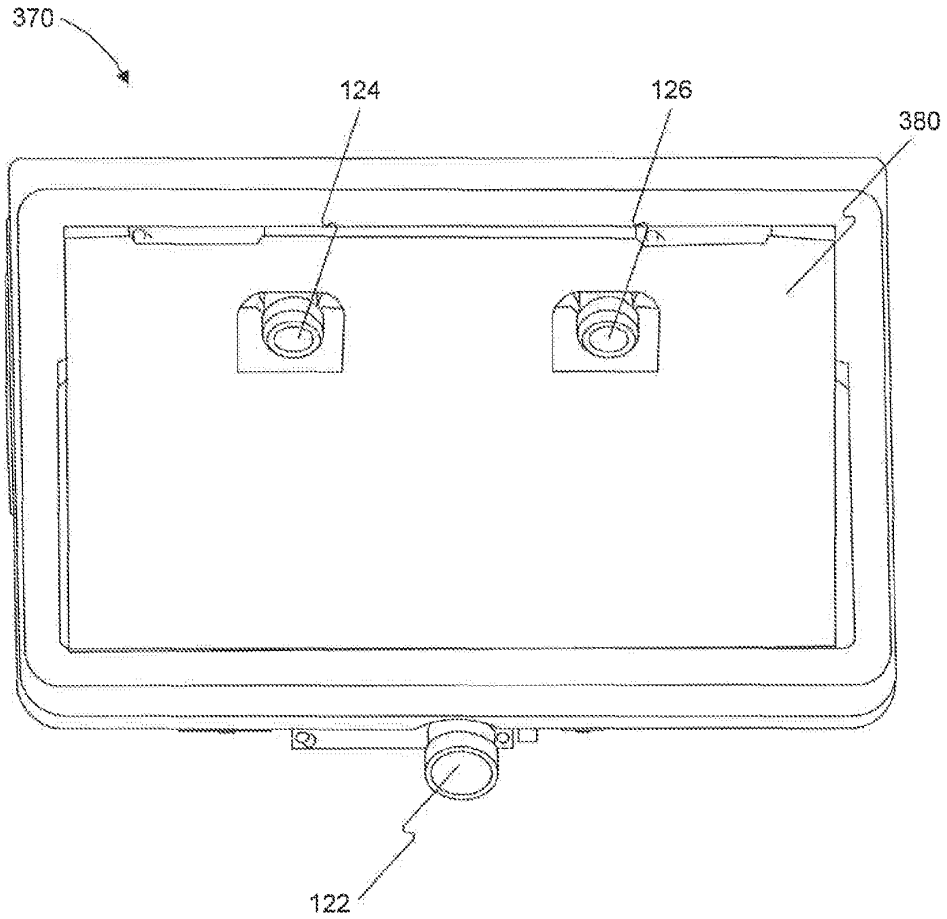

FIG. 3C

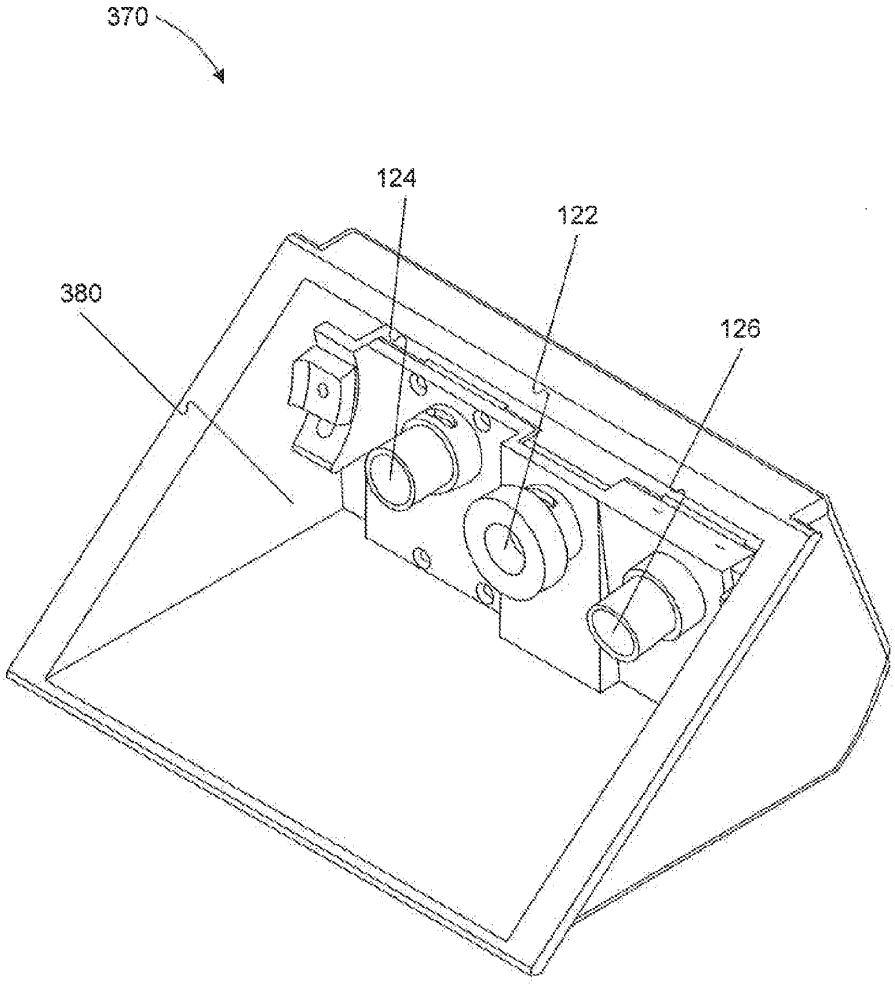

FIG. 3D

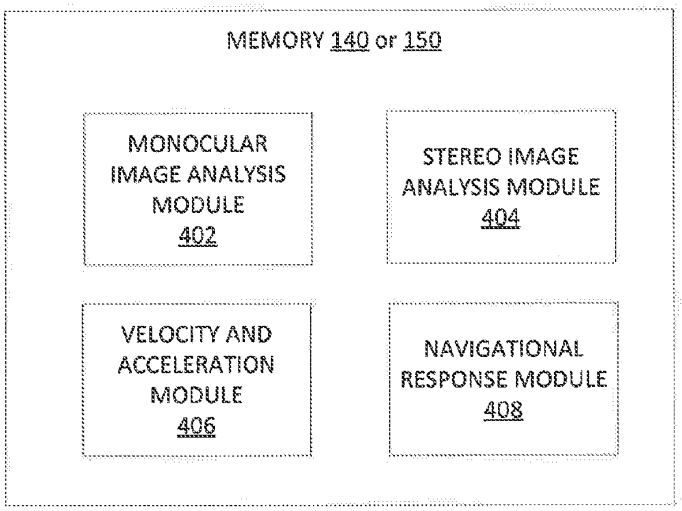
MEMORY 140 or 150
MONOCULAR IMAGE ANALYSIS MODULE 402
STEREO IMAGE ANALYSIS MODULE 404
VELOCITY AND ACCELERATION MODULE 406
NAVIGATIONAL RESPONSE MODULE 408

FIG. 4

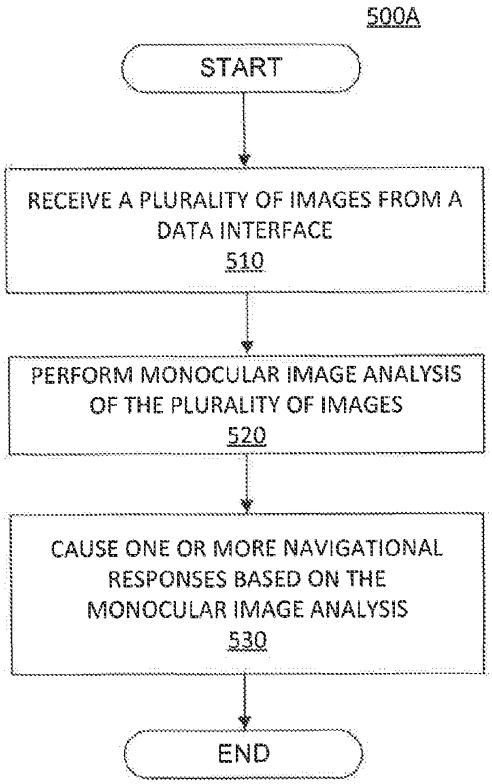
500A
START
RECEIVE A PLURALITY OF IMAGES FROM A DATA INTERFACE
510
PERFORM MONOCULAR IMAGE ANALYSIS OF THE PLURALITY OF IMAGES
520
CAUSE ONE OR MORE NAVIGATIONAL RESPONSES BASED ON THE MONOCULAR IMAGE ANALYSIS
530
END

FIG. 5A

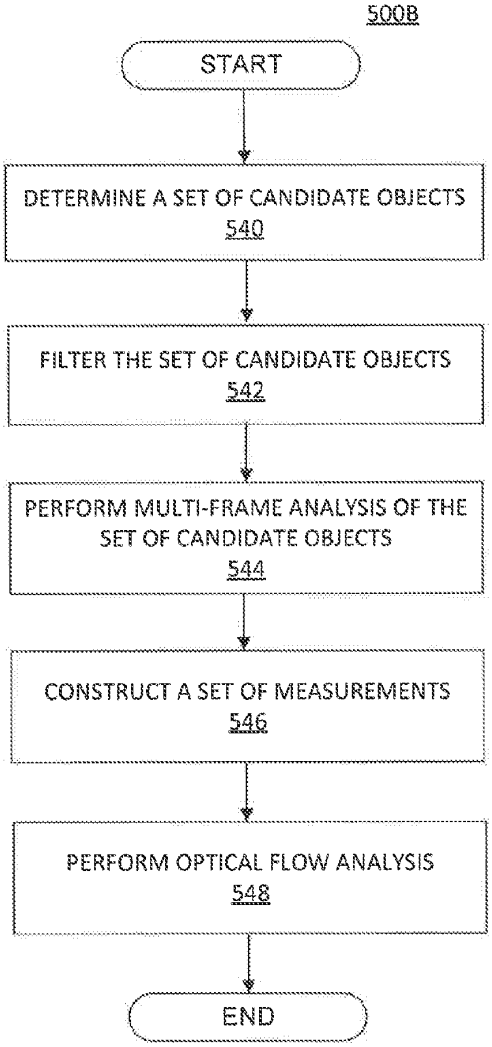
500B
START
DETERMINE A SET OF CANDIDATE OBJECTS
540
FILTER THE SET OF CANDIDATE OBJECTS
542
PERFORM MULTI-FRAME ANALYSIS OF THE SET OF CANDIDATE OBJECTS
544
CONSTRUCT A SET OF MEASUREMENTS
546
PERFORM OPTICAL FLOW ANALYSIS
548
END

FIG. 5B

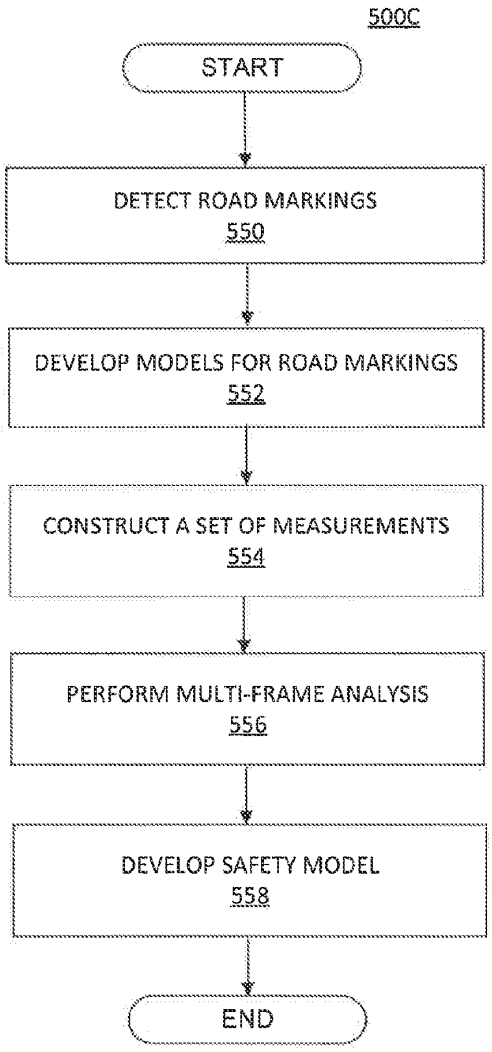
500C
START
DETECT ROAD MARKINGS
550
DEVELOP MODELS FOR ROAD MARKINGS
552
CONSTRUCT A SET OF MEASUREMENTS
554
PERFORM MULTI-FRAME ANALYSIS
556
DEVELOP SAFETY MODEL
558
END

FIG. 5C

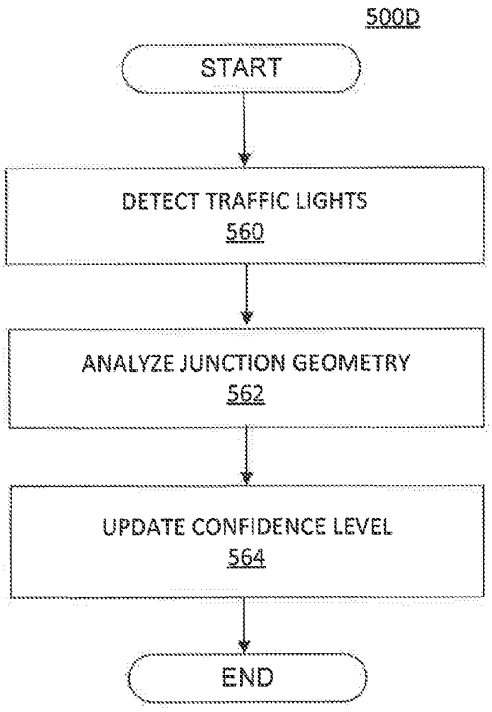
500D
START
DETECT TRAFFIC LIGHTS
560
ANALYZE JUNCTION GEOMETRY
562
UPDATE CONFIDENCE LEVEL
564
END

FIG. 5D

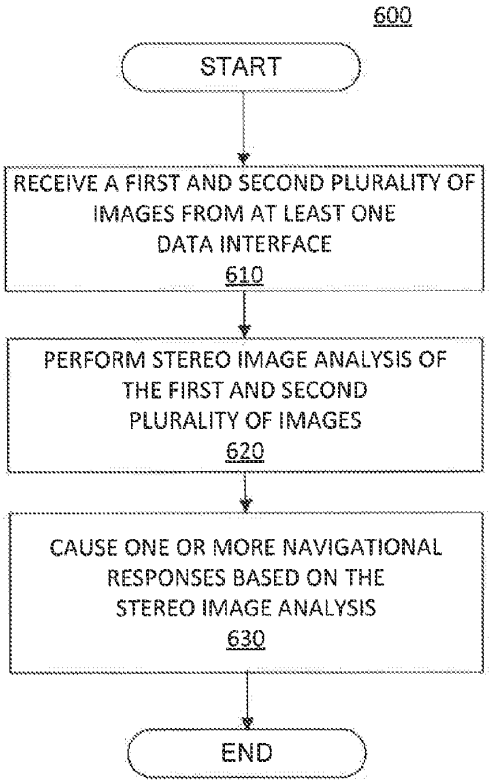
600
START
RECEIVE A FIRST AND SECOND PLURALITY OF IMAGES FROM AT LEAST ONE DATA INTERFACE
610
PERFORM STEREO IMAGE ANALYSIS OF THE FIRST AND SECOND PLURALITY OF IMAGES
620
CAUSE ONE OR MORE NAVIGATIONAL RESPONSES BASED ON THE STEREO IMAGE ANALYSIS
630
END

FIG. 6

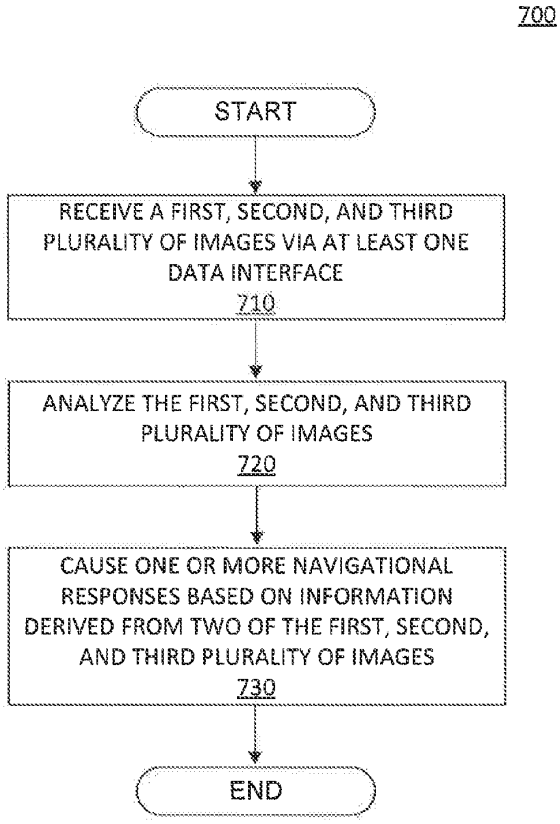
700
START
RECEIVE A FIRST, SECOND, AND THIRD PLURALITY OF IMAGES VIA AT LEAST ONE DATA INTERFACE
710
ANALYZE THE FIRST, SECOND, AND THIRD PLURALITY OF IMAGES
720
CAUSE ONE OR MORE NAVIGATIONAL RESPONSES BASED ON INFORMATION DERIVED FROM TWO OF THE FIRST, SECOND, AND THIRD PLURALITY OF IMAGES
730
END

FIG. 7

INTERNATIONAL SEARCH REPORT

International application No
PCT/IB2014/002876

A. CLASSIFICATION OF SUBJECT MATTER
INV. G06K9/00791 G05D1/02
ADD.

According to International Patent Classification (IPC) or to both national classification and IPC

B. FIELDS SEARCHED

Minimum documentation searched (classification system followed by classification symbols)
G06K G05D

Documentation searched other than minimum documentation to the extent that such documents are included in the fields searched

Electronic data base consulted during the international search (name of data base and, where practicable, search terms used)

EPO-Internal, WPI Data

C. DOCUMENTS CONSIDERED TO BE RELEVANT

Category*	Citation of document, with indication, where appropriate, of the relevant passages	Relevant to claim No.
X	BERTOZZI M ET AL: "Vision-based intelligent vehicles: State of the art and perspectives", ROBOTICS AND AUTONOMOUS SYSTEMS, ELSEVIER SCIENCE PUBLISHERS, AMSTERDAM, NL, vol. 32, no. 1, 1 July 2000 (2000-07-01), pages 1-16, XP004205091, ISSN: 0921-8890, DOI: 10.1016/S0921-8890(99)00125-6 right column, first paragraph; page 4; figure 1 Section 3.4.2; page 11	1-25

-/--

[X] Further documents are listed in the continuation of Box C.

[X] See patent family annex.

* Special categories of cited documents :

"A" document defining the general state of the art which is not considered to be of particular relevance

"E" earlier application or patent but published on or after the international filing date

"L" document which may throw doubts on priority claim(s) or which is cited to establish the publication date of another citation or other special reason (as specified)

"O" document referring to an oral disclosure, use, exhibition or other means

"P" document published prior to the international filing date but later than the priority date claimed

"T" later document published after the international filing date or priority date and not in conflict with the application but cited to understand the principle or theory underlying the invention

"X" document of particular relevance; the claimed invention cannot be considered novel or cannot be considered to involve an inventive step when the document is taken alone

"Y" document of particular relevance; the claimed invention cannot be considered to involve an inventive step when the document is combined with one or more other such documents, such combination being obvious to a person skilled in the art

"&" document member of the same patent family

Date of the actual completion of the international search	Date of mailing of the international search report
30 March 2015	09/04/2015

Name and mailing address of the ISA/	Authorized officer
European Patent Office, P.B. 5818 Patentlaan 2 NL - 2280 HV Rijswijk Tel. (+31-70) 340-2040, Fax: (+31-70) 340-3016	Rajadell Rojas, Olga

Form PCT/ISA/210 (second sheet) (April 2005)

INTERNATIONAL SEARCH REPORT

International application No
PCT/IB2014/002876

C(Continuation). DOCUMENTS CONSIDERED TO BE RELEVANT

Category*	Citation of document, with indication, where appropriate, of the relevant passages	Relevant to claim No.
X	US 8 139 109 B2 (BROGGI ALBERTO [IT] ET AL SCHMIEDEL GARY [US] ET AL) 20 March 2012 (2012-03-20) column 1, line 29 - line 34 column 2, line 27 - line 32 column 6, line 1 - line 4 column 8, line 62 - line 64 column 8, line 67 - column 9, line 4 column 9, line 31 - line 35 column 9, line 60 - line 61 column 11, line 15 - line 20 column 12, line 46 - line 48 -----	5-14, 19-25
X	Luke Fletcher ET AL: "Computer Vision for Vehicle Monitoring and Control", Proc. 2001 Australian Conference on Robotics and Automation, 15 November 2001 (2001-11-15), XP055179326, Retrieved from the Internet: URL:http://www.robots.ox.ac.uk/~nema/publications/Fletcher01.pdf [retrieved on 2015-03-25] Section 2, paragraphs 2-4; page 68 Section 3, paragraph 2; page 69 left column; page 71 -----	5-14, 19-25
X	EP 1 810 882 A1 (AISIN SEIKI [JP]) 25 July 2007 (2007-07-25) paragraph [0024] column 8, line 53 - line 55 column 7, line 54 - line 55 paragraph [0026]; figure 2 -----	5-14, 19-25
A	BROGGI A ET AL: "ARGO AND THE MILLEMIGLIA IN AUTOMATICO TOUR", IEEE INTELLIGENT SYSTEMS, IEEE SERVICE CENTER, NEW YORK, NY, US, vol. 14, no. 1, 1 January 1999 (1999-01-01), pages 55-64, XP000849879, ISSN: 1094-7167, DOI: 10.1109/5254.747906 third column; page 55 first column, Automatic driving mode; page 57 section GOLD; page 57; figures 2,3 Lane detection, sixth point; page 62 first column, Automatic steering; page 58 -----	1,2,15, 16

-/--

Form PCT/ISA/210 (continuation of second sheet) (April 2005)

INTERNATIONAL SEARCH REPORT

International application No
PCT/IB2014/002876

C(Continuation). DOCUMENTS CONSIDERED TO BE RELEVANT

Category*	Citation of document, with indication, where appropriate, of the relevant passages	Relevant to claim No.
T	Anonymous: "Field of view - Wikipedia, the free encyclopedia", , 26 March 2015 (2015-03-26), XP055179921, Retrieved from the Internet: URL:http://en.wikipedia.org/wiki/Field_of_view [retrieved on 2015-03-27] Section Machine vision -----	1-25

Form PCT/ISA/210 (continuation of second sheet) (April 2005)

INTERNATIONAL SEARCH REPORT

Information on patent family members

International application No
PCT/IB2014/002876

Patent document cited in search report	Publication date	Patent family member(s)	Publication date
US 8139109 B2	20-03-2012	US 2007291130 A1	20-12-2007
		US 2012143430 A1	07-06-2012
		WO 2008073518 A2	19-06-2008
EP 1810882 A1	25-07-2007	CN 101048296 A	03-10-2007
		EP 1810882 A1	25-07-2007
		JP 4186908 B2	26-11-2008
		JP 2006123670 A	18-05-2006
		US 2008002025 A1	03-01-2008
		WO 2006046382 A1	04-05-2006

Form PCT/ISA/210 (patent family annex) (April 2005)

(12) INTERNATIONAL APPLICATION PUBLISHED UNDER THE PATENT COOPERATION TREATY (PCT)

(19) World Intellectual Property Organization
International Bureau

(43) International Publication Date
11 June 2015 (11.06.2015)

WIPO | PCT

(10) International Publication Number
WO 2015/083009 A1

(51) International Patent Classification:
G06K 9/00 (2006.01) *B60K 31/00* (2006.01)

(21) International Application Number:
PCT/IB2014/003151

(22) International Filing Date:
4 December 2014 (04.12.2014)

(25) Filing Language: English

(26) Publication Language: English

(30) Priority Data:

61/911,490	4 December 2013 (04.12.2013)	US
61/993,084	14 May 2014 (14.05.2014)	US
61/993,111	14 May 2014 (14.05.2014)	US
62/015,524	23 June 2014 (23.06.2014)	US
62/022,221	9 July 2014 (09.07.2014)	US
62/040,224	21 August 2014 (21.08.2014)	US
62/040,269	21 August 2014 (21.08.2014)	US

(71) Applicant: **MOBILEYE VISION TECHNOLOGIES LTD.** [IL/IL]; 13 Hartom Street, P.O.B. 45157, Har Hotzvim, 91450 Jerusalem (IL).

(72) Inventors: **CLARKE, Anna**; 96 Nofarim St., 9083600 Har Adar (IL). **BAGON, Eyal**; 11 Yotam Street, 9315315 Jerusalem (IL). **NIR, Gali**; Nathan Hachaham 4, Tel Aviv (IL).

(81) Designated States *(unless otherwise indicated, for every kind of national protection available)*: AE, AG, AL, AM, AO, AT, AU, AZ, BA, BB, BG, BH, BN, BR, BW, BY, BZ, CA, CH, CL, CN, CO, CR, CU, CZ, DE, DK, DM, DO, DZ, EC, EE, EG, ES, FI, GB, GD, GE, GH, GM, GT, HN, HR, HU, ID, IL, IN, IR, IS, JP, KE, KG, KN, KP, KR, KZ, LA, LC, LK, LR, LS, LU, LY, MA, MD, ME, MG, MK, MN, MW, MX, MY, MZ, NA, NG, NI, NO, NZ, OM, PA, PE, PG, PH, PL, PT, QA, RO, RS, RU, RW, SA, SC, SD, SE, SG, SK, SL, SM, ST, SV, SY, TH, TJ, TM, TN, TR, TT, TZ, UA, UG, US, UZ, VC, VN, ZA, ZM, ZW.

(84) Designated States *(unless otherwise indicated, for every kind of regional protection available)*: ARIPO (BW, GH, GM, KE, LR, LS, MW, MZ, NA, RW, SD, SL, ST, SZ, TZ, UG, ZM, ZW), Eurasian (AM, AZ, BY, KG, KZ, RU, TJ, TM), European (AL, AT, BE, BG, CH, CY, CZ, DE, DK, EE, ES, FI, FR, GB, GR, HR, HU, IE, IS, IT, LT, LU, LV, MC, MK, MT, NL, NO, PL, PT, RO, RS, SE, SI, SK, SM, TR), OAPI (BF, BJ, CF, CG, CI, CM, GA, GN, GQ, GW, KM, ML, MR, NE, SN, TD, TG).

Published:

— *with international search report (Art. 21(3))*

— *before the expiration of the time limit for amending the claims and to be republished in the event of receipt of amendments (Rule 48.2(h))*

(54) Title: SYSTEMS AND METHODS FOR MIMICKING A LEADING VEHICLE

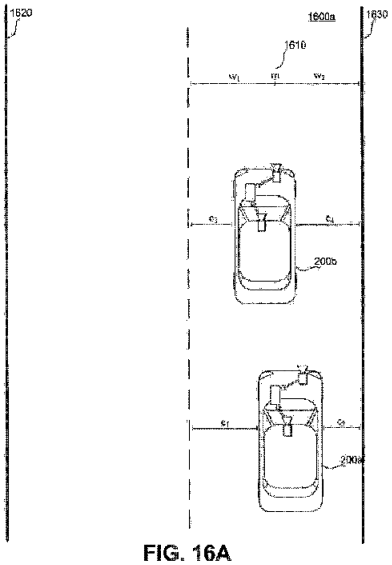

FIG. 16A

(57) Abstract: Systems and methods use cameras to provide autonomous navigation features. In one implementation, a driver assist navigation system is provided for a primary vehicle. The system may include at least one image capture device configured to acquire a plurality of images of an area in a vicinity of the primary vehicle; a data interface; and at least one processing device. The at least one processing device may be configured to: locate in the plurality of images a leading vehicle; determine, based on the plurality of images, at least one action taken by the leading vehicle; and cause the primary vehicle to mimic the at least one action of the leading vehicle.

WO 2015/083009 A1

SYSTEMS AND METHODS FOR MIMICKING A LEADING VEHICLE

Cross References to Related Applications

[001] This application claims the benefit of priority of United States Provisional Patent Application No. 61/911,490, filed on December 4, 2013; United States Provisional Patent Application No. 61/993,084, filed on May 14, 2014; United States Provisional Patent Application No. 61/993,111, filed on May 14, 2014; United States Provisional Patent Application 62/015,524, filed on June 23, 2014; United States Provisional Patent Application 62/022,221, filed on July 9, 2014; United States Provisional Patent Application No. 62/040,224, filed on August 21, 2014; and United States Provisional Patent Application 62/040,269, filed on August 21, 2014. All of the foregoing applications are incorporated herein by reference in their entirety.

BACKGROUND

I. Technical Field

[002] The present disclosure relates generally to autonomous vehicle navigation and, more specifically, to systems and methods that use cameras to provide autonomous vehicle navigation features.

II. Background Information

[003] As technology continues to advance, the goal of a fully autonomous vehicle that is capable of navigating on roadways is on the horizon. Primarily, an autonomous vehicle may be able to identify its environment and navigate without input from a human operator. Autonomous vehicles may also take into account a variety of factors and make appropriate decisions based on those factors to safely and accurately reach an intended destination. For example, various objects—such as other vehicles and pedestrians—are encountered when a vehicle typically travels a roadway. Autonomous driving systems may recognize these objects in a vehicle's environment and take appropriate and timely action to avoid collisions. Additionally, autonomous driving systems may identify other indicators—such as traffic signals, traffic signs, and lane markings—that regulate vehicle movement (e.g., when the vehicle must stop and may go, a speed at which the vehicle must not exceed, where the vehicle must be positioned on the roadway, etc.). Autonomous driving systems may need to determine when a vehicle should change lanes, turn at intersections, change roadways, etc. As is evident from these examples, many factors may need to be addressed in order to provide an autonomous vehicle that is capable of navigating safely and accurately.

SUMMARY

[004] Embodiments consistent with the present disclosure provide systems and methods for autonomous vehicle navigation. The disclosed embodiments may use cameras to provide autonomous vehicle navigation features. For example, consistent with the disclosed embodiments, the disclosed systems may include one, two, or more cameras that monitor the environment of a vehicle and cause a navigational response based on an analysis of images captured by one or more of the cameras.

[005] Consistent with a disclosed embodiment, a driver assist navigation system is provided for a vehicle. The system may include at least one image capture device configured to acquire a plurality of

images of an area in a vicinity of the vehicle; a data interface; and at least one processing device. The at least one processing device may be configured to: receive the plurality of images via the data interface; determine from the plurality of images a first lane constraint on a first side of the vehicle; determine from the plurality of images a second lane constraint on a second side of the vehicle opposite to the first side of the vehicle, wherein the first and second lane constraints define a lane within which the vehicle travels and wherein a first distance corresponds to a distance between the first side of the vehicle and the first lane constraint and a second distance corresponds to a distance between the second side of the vehicle and the second lane constraint; determine, based on the plurality of images, whether a lane offset condition exists on the first side of the vehicle; if a lane offset condition exists on the first side of the vehicle, cause the vehicle to travel within the first and second lane constraints such that the first distance is greater than the second distance; determine, based on the plurality of images, whether a lane offset condition exists on the second side of the vehicle; and if a lane offset condition exists on the second side of the vehicle, cause the vehicle to travel within the first and second lane constraints such that the first distance is less than the second distance.

[006] Consistent with the disclosed embodiment, the at least one processing device may be further configured to cause the first distance to be substantially the same as the second distance if, based on the plurality of images, a lane offset condition is determined to exist on both the first and second sides of the vehicle. The at least one processing device may be configured to determine, based on the plurality of images, whether a lane offset condition is substantially non-existent, and if the lane offset condition is substantially non-existent, cause the vehicle to travel within the first and second lane constraints such that the first distance is substantially equal to the second distance. If the driver assist navigation system determines that a lane offset condition exists, the at least one processing device may be configured to cause the first distance to be at least 1.25 times greater than the second distance. Alternatively, the at least one processing device may be further configured to cause the first distance to be at least 2 times greater than the second distance. If the driver assist navigation system determines that the lane offset condition includes a curved road, the at least one processing device may be configured to cause the vehicle to travel within the first and second lane constraints such that the first distance is toward an outside of the curve relative to the vehicle, and the second distance is toward an inside of the curve relative to the vehicle. If the driver assist navigation system determines that the lane offset condition includes a presence of one or more objects on one side of the lane, the at least one processing device may be configured to cause the vehicle to travel within the first and second lane constraints such that the first distance, which is greater than the second distance, is provided toward the one or more objects. The one or more objects may include parked cars, a wall, and/or pedestrians, and may have a height of greater than 10 cm from a road surface. At least one of the first and second lane constraints may include a line marked on a road surface, an edge of a road surface, or a determined midpoint of a road surface width. Determination of whether a lane offset condition exists on the first side of the vehicle may be performed based on a position of a target object on the first side of the vehicle. The causing of the vehicle to travel

within the first and second lane constraints such that the first distance is greater than the second distance may be overridden based on input from a driver of the vehicle.

[007] Consistent with another disclosed embodiment, a vehicle may include a first vehicle side; a second vehicle side opposite the first vehicle side; at least one image capture device configured to acquire a plurality of images of an area in a vicinity of the vehicle; a data interface; and at least one processing device. The at least one processing device may be configured to: receive the plurality of images via the data interface; determine from the plurality of images a first lane constraint on the first vehicle side; determine from the plurality of images a second lane constraint on the second vehicle side, wherein the first and second lane constraints define a lane within which the vehicle travels and wherein a first distance corresponds to a distance between the first vehicle side and the first lane constraint and a second distance corresponds to a distance between the second vehicle side and the second lane constraint; determine, based on the plurality of images, whether a lane offset condition exists on the first vehicle side; if a lane offset condition exists on the first vehicle side, cause the vehicle to travel within the first and second lane constraints such that the first distance is greater than the second distance; determine, based on the plurality of images, whether a lane offset condition exists on the second vehicle side; and if a lane offset condition exists on the second vehicle side, cause the vehicle to travel within the first and second lane constraints such that the first distance is less than the second distance.

[008] Consistent with the disclosed embodiment, the at least one processing device may be further configured to cause the first distance to be substantially the same as the second distance if, based on the plurality of images, a lane offset condition is determined to exist on both the first and second vehicle sides. The at least one processing device may be configured to determine, based on the plurality of images, whether a lane offset condition is substantially non-existent, and if the lane offset condition is substantially non-existent, cause the vehicle to travel within the first and second lane constraints such that the first distance is substantially equal to the second distance. The lane offset condition may include a curved road, and the at least one processing device may be configured to cause the vehicle to travel within the first and second lane constraints such that the first distance is toward an outside of the curve relative to the vehicle, and the second distance is toward an inside of the curve relative to the vehicle. The lane offset condition may include a presence of one or more objects on one side of the lane, and the at least one processing device may be configured to cause the vehicle to travel within the first and second lane constraints such that the first distance, which is greater than the second distance, is provided toward the one or more objects. At least one of the first and second lane constraints may include an edge of a road surface and/or a determined midpoint of a road surface width. Determination of whether a lane offset condition exists on the first side of the vehicle may be performed based on a position of a target object on the first side of the vehicle. The causing of the vehicle to travel within the first and second lane constraints such that the first distance is greater than the second distance may be overridden based on input from a driver of the vehicle.

[009] Consistent with another disclosed embodiment, a method is provided for navigating a vehicle. The method may include acquiring, using at least one image capture device, a plurality of images

of an area in the vicinity of the vehicle; determining from the plurality of images a first lane constraint on a first side of the vehicle; determining from the plurality of images a second lane constraint on a second side of the vehicle opposite to the first side of the vehicle, wherein the first and second lane constraints define a lane within which the vehicle travels and wherein a first distance corresponds to a distance between the first side of the vehicle and the first lane constraint and a second distance corresponds to a distance between the second side of the vehicle and the second lane constraint; determining, based on the plurality of images, whether a lane offset condition exists on the first side of the vehicle; if a lane offset condition exists on the first side of the vehicle, causing the vehicle to travel within the first and second lane constraints such that the first distance is greater than the second distance; determining, based on the plurality of images, whether a lane offset condition exists on the second side of the vehicle; and if a lane offset condition exists on the second side of the vehicle, causing the vehicle to travel within the first and second lane constraints such that the first distance is less than the second distance.

[010] Consistent with a disclosed embodiment, a driver assist navigation system is provided for a vehicle. The system may include at least one image capture device configured to acquire a plurality of images of an area in a vicinity of the vehicle; a data interface; and at least one processing device. The at least processing device may be configured to: receive the plurality of images via the data interface; determine from the plurality of images a current lane of travel from among a plurality of available travel lanes; and cause the vehicle to change lanes if the current lane of travel is not the same as a predetermined default travel lane.

[011] Consistent with the disclosed embodiment, the predetermined default travel lane may be a right-most lane among the plurality of available travel lanes. The at least one processing device may be configured to activate a turn signal prior to causing the vehicle to change lanes. The at least one processing device may be configured to cause an audible announcement prior to causing the vehicle to change lanes. The at least one processing device may be configured to cause an audible indicator prior to causing the vehicle to change lanes. The predetermined default travel lane may be determined based on the plurality of images of the area in the vicinity of the vehicle, based on data received from a global positioning system, and/or based on an input received from a user.

[012] Consistent with another disclosed embodiment, a vehicle may include a body; at least one image capture device configured to acquire a plurality of images of an area in a vicinity of the vehicle; a data interface; and at least one processing device. The at least one processing device may be configured to: receive the plurality of images via the data interface; determine from the plurality of images a current lane of travel from among a plurality of available travel lanes; and cause the vehicle to change lanes if the current lane of travel is not the same as a predetermined default travel lane.

[013] Consistent with the disclosed embodiment, the predetermined default travel lane may be a right-most lane among the plurality of available travel lanes. The at least one processing device may be configured to activate a turn signal prior to causing the vehicle to change lanes. The at least one processing device may be configured to cause an audible announcement prior to causing the vehicle to change lanes. The at least one processing device may be configured to cause an audible indicator prior to

causing the vehicle to change lanes. The predetermined default travel lane may be determined based on the plurality of images of the area in the vicinity of the vehicle, based on data received from a global positioning system, and/or based on an input received from a user.

[014] Consistent with another disclosed embodiment, a method is provided for navigating a vehicle. The method may include acquiring, using at least one image capture device, a plurality of images of an area in a vicinity of the vehicle; determining from the plurality of images a current lane of travel from among a plurality of available travel lanes; and causing the vehicle to change lanes if the current lane of travel is not the same as a predetermined default travel lane.

[015] Consistent with the disclosed embodiment, the predetermined default travel lane may be a right-most lane among the plurality of available travel lanes. A turn signal may be activated prior to causing the vehicle to change lanes. The predetermined default travel lane may be determined based on the plurality of images of the area in the vicinity of the vehicle.

[016] Consistent with a disclosed embodiment, a driver assist navigation system is provided for a vehicle. The system may include at least one image capture device configured to acquire a plurality of images of an area in a vicinity of the vehicle; a data interface; and at least one processing device. The at least one processing device may be configured to: receive the plurality of images via the data interface; recognize a curve to be navigated based on map data and vehicle position information; determine an initial target velocity for the vehicle based on at least one characteristic of the curve as reflected in the map data; adjust a velocity of the vehicle to the initial target velocity; determine, based on the plurality of images, one or more observed characteristics of the curve; determine an updated target velocity based on the one or more observed characteristics of the curve; and adjust the velocity of the vehicle to the updated target velocity.

[017] Consistent with the disclosed embodiment, the at least one characteristic of the curve may include an expected radius of curvature for the curve as determined from the map data. The initial target velocity may be determined based on the expected radius of curvature for the curve and a lateral acceleration limit. The lateral acceleration limit may be between about 0.2 m/sec^2 and 3.0 m/sec^2. Alternatively, the lateral acceleration limit may be between about 1.5 m/sec^2 and 3.0 m/sec^2. The lateral acceleration limit may be adjusted based on a road width determined based on the plurality of images. The one or more observed characteristics of the curve may include an actual radius of curvature for the curve as determined through analysis of the plurality of images. The updated target velocity may be determined based on the actual radius of curvature for the curve and a lateral acceleration limit. The one or more observed characteristics of the curve may include a rate of change in an actual radius of curvature for the curve as determined through analysis of the plurality of images. The one or more observed characteristics of the curve may include a degree of banking associated with the curve as determined through analysis of the plurality of images. The one or more observed characteristics of the curve may include information, determined through analysis of the plurality of images, relating to the curve conveyed by one or more road signs. The initial target velocity may also be based on a focal range of the at least one image capture device. The initial target velocity may also be based on whether a traffic light

is determined to be located along the curve. The initial target velocity may also be based on whether a traffic light is determined to be located within a predetermined distance after the curve.

[018] Consistent with another disclosed embodiment, a vehicle may include a body; at least one image capture device configured to acquire a plurality of images of an area in a vicinity of the vehicle; a data interface; and at least one processing device. The at least one processing device may be configured to: receive the plurality of images via the data interface; recognize a curve to be navigated based on map data and vehicle position information; determine an initial target velocity for the vehicle based on at least one characteristic of the curve as reflected in the map data; adjust a velocity of the vehicle to the initial target velocity; determine, based on the plurality of images, one or more observed characteristics of the curve; determine an updated target velocity based on the one or more observed characteristics of the curve; and adjust the velocity of the vehicle to the updated target velocity.

[019] Consistent with the disclosed embodiment, the at least one characteristic of the curve may include an expected radius of curvature for the curve as determined from the map data. The initial target velocity may be determined based on the expected radius of curvature for the curve and a lateral acceleration limit. The lateral acceleration limit may be adjusted based on a road width determined based on the plurality of images. The one or more observed characteristics of the curve may include an actual radius of curvature for the curve as determined through analysis of the plurality of images. The updated target velocity may be determined based on the actual radius of curvature for the curve and a lateral acceleration limit. The one or more observed characteristics of the curve may include a rate of change in an actual radius of curvature for the curve as determined through analysis of the plurality of images. The one or more observed characteristics of the curve may include a degree of banking associated with the curve as determined through analysis of the plurality of images. The one or more observed characteristics of the curve may include information, determined through analysis of the plurality of images, relating to the curve conveyed by one or more road signs. The initial target velocity may also be based on a focal range of the at least one image capture device. The initial target velocity may also be based on whether a traffic light is determined to be located along the curve. The initial target velocity may also be based on whether a traffic light is determined to be located within a predetermined distance after the curve.

[020] Consistent with another disclosed embodiment, a method is provided for navigating a vehicle. The method may include acquiring, using at least one image capture device, a plurality of images of an area in a vicinity of the vehicle; recognizing a curve to be navigated based on map data and vehicle position information; determining an initial target velocity for the vehicle based on at least one characteristic of the curve as reflected in the map data; adjusting a velocity of the vehicle to the initial target velocity; determining, based on the plurality of images, one or more observed characteristics of the curve; determining an updated target velocity based on the one or more observed characteristics of the curve; and adjusting the velocity of the vehicle to the updated target velocity.

[021] Consistent with a disclosed embodiment, a driver assist navigation system is provided for a primary vehicle. The system may include at least one image capture device configured to acquire a plurality of images of an area in a vicinity of the primary vehicle; a data interface; and at least one

processing device. The at least one processing device may be configured to: receive the plurality of images via the data interface; determine, from at least some of the plurality of images, a first lane constraint on a first side of the primary vehicle; determine, from at least some of the plurality of images, a second lane constraint on a second side of the primary vehicle opposite to the first side of the primary vehicle, wherein the first and second lane constraints define a lane within which the primary vehicle travels; cause the primary vehicle to travel within the first and second lane constraints; locate in the plurality of images a leading vehicle; determine, based on the plurality of images, at least one action taken by the leading vehicle; and cause the primary vehicle to mimic the at least one action of the leading vehicle.

[022] Consistent with the disclosed embodiment, at least one of the first and second lane constraints may include a line marked on a road surface. At least one of the first and second lane constraints may include an edge of a road surface. At least one of the first and second lane constraints may include a determined midpoint of a road surface width. The at least one action taken by the leading vehicle may include a turn, and the at least one processing device may cause the primary vehicle to execute a similar turn beginning at a location at which the leading vehicle initiated its turn. The at least one action taken by the leading vehicle may include an acceleration. The at least one action taken by the leading vehicle may include braking. The at least one action taken by the leading vehicle may include providing a first offset distance on a side of the leading vehicle adjacent to the first lane constraint that is different from a second offset distance on a side of the leading vehicle adjacent to the second lane constraint. The at least one processing device may be further configured to determine, based on the plurality of images or based on map data and position information, whether the leading vehicle is turning at an intersection, and if the leading vehicle is determined to be turning at an intersection, decline to mimic the turn of the leading vehicle. The at least one processing device may be configured to determine, based on the plurality of images or based on map data and position information, whether the leading vehicle is turning at an intersection, determine whether the leading vehicle is changing lanes within the intersection, mimic the turn of the leading vehicle if the leading vehicle is determined to be turning at an intersection and not changing lanes within the intersection, and decline to mimic the turn of the leading vehicle if the leading vehicle is determined to be turning at an intersection, but changing lanes within the intersection. The at least one processing device may be configured to acquire a first leading vehicle based on the plurality of images, acquire a second leading vehicle based on the plurality of images, and cause the primary vehicle to mimic the first leading vehicle if, based on the plurality of images, the first leading vehicle is determined to be continuing on a path having less of a turning radius than a path followed by the second leading vehicle. The at least one processing device may be configured to determine position information for the leading vehicle and compare the position information to predetermined map data, create a navigation history for the leading vehicle by tracking movements of the leading vehicle relative to the predetermined map data, and determine whether to cause the primary vehicle to mimic the at least one action of the leading vehicle based on the navigation history of the leading vehicle. The at least one processing device may be configured to cause the primary vehicle to mimic a turn of the leading vehicle,

even where no turn is detected based on the plurality of images, when the navigation history indicates that the leading vehicle has successfully navigated at least one prior turn.

[023] Consistent with another disclosed embodiment, a primary vehicle may include a body; at least one image capture device configured to acquire a plurality of images of an area in a vicinity of the primary vehicle; a data interface; and at least one processing device. The at least one processing device may be configured to: receive the plurality of images via the data interface; determine, from at least some of the plurality of images, a first lane constraint on a first side of the primary vehicle; determine, from at least some of the plurality of images, a second lane constraint on a second side of the primary vehicle opposite to the first side of the primary vehicle, wherein the first and second lane constraints define a lane within which the primary vehicle travels; cause the primary vehicle to travel within the first and second lane constraints; locate in the plurality of images a leading vehicle; determine, based on the plurality of images, at least one action taken by the leading vehicle; and cause the primary vehicle to mimic the at least one action of the leading vehicle.

[024] Consistent with the disclosed embodiment, at least one of the first and second lane constraints may include a line marked on a road surface. At least one of the first and second lane constraints may include an edge of a road surface. At least one of the first and second lane constraints may include a determined midpoint of a road surface width. The at least one action taken by the leading vehicle may include a turn, and the at least one processing device may cause the primary vehicle to execute a similar turn beginning at a location at which the leading vehicle initiated its turn. The at least one action taken by the leading vehicle may include an acceleration. The at least one action taken by the leading vehicle may include braking. The at least one action taken by the leading vehicle may include providing a first offset distance on a side of the leading vehicle adjacent to the first lane constraint that is different from a second offset distance on a side of the leading vehicle adjacent to the second lane constraint. The at least one processing device may be further configured to determine, based on the plurality of images or based on map data and position information, whether the leading vehicle is turning at an intersection, and if the leading vehicle is determined to be turning at an intersection, decline to mimic the turn of the leading vehicle. The at least one processing device may be configured to determine, based on the plurality of images or based on map data and position information, whether the leading vehicle is turning at an intersection, determine whether the leading vehicle is changing lanes within the intersection, mimic the turn of the leading vehicle if the leading vehicle is determined to be turning at an intersection and not changing lanes within the intersection, and decline to mimic the turn of the leading vehicle if the leading vehicle is determined to be turning at an intersection, but changing lanes within the intersection. The at least one processing device may be configured to acquire a first leading vehicle based on the plurality of images, acquire a second leading vehicle based on the plurality of images, and cause the primary vehicle to mimic the first leading vehicle if, based on the plurality of images, the first leading vehicle is determined to be continuing on a path having less of a turning radius than a path followed by the second leading vehicle. The at least one processing device may be configured to determine position information for the leading vehicle and compare the position information to predetermined map data,

create a navigation history for the leading vehicle by tracking movements of the leading vehicle relative to the predetermined map data, and determine whether to cause the primary vehicle to mimic the at least one action of the leading vehicle based on the navigation history of the leading vehicle. The at least one processing device may be configured to cause the primary vehicle to mimic a turn of the leading vehicle, even where no turn is detected based on the plurality of images, when the navigation history indicates that the leading vehicle has successfully navigated at least one prior turn.

[025] Consistent with another disclosed embodiment, a method is provided for navigating a primary vehicle. The method ma include acquiring, using at least one image capture device, a plurality of images of an area in a vicinity of the primary vehicle; determining, from at least some of the plurality of images, a first lane constraint on a first side of the primary vehicle; determining, from at least some of the plurality of images, a second lane constraint on a second side of the primary vehicle opposite to the first side of the primary vehicle, wherein the first and second lane constraints define a lane within which the primary vehicle travels; causing the primary vehicle to travel within the first and second lane constraints; locating in the plurality of images a leading vehicle; determining, based on the plurality of images, at least one action taken by the leading vehicle; and causing the primary vehicle to mimic the at least one action of the leading vehicle.

[026] Consistent with a disclosed embodiment, a driver assist navigation system is provided for a user vehicle. They system may include at least one image capture device configured to acquire a plurality of images of an area in a vicinity of the user vehicle; a data interface; and at least one processing device. The at least one processing device may be configured to: receive the plurality of images via the data interface; determine from the plurality of images a first lane constraint on a first side of the user vehicle; determine from the plurality of images a second lane constraint on a second side of the user vehicle opposite to the first side of the user vehicle, wherein the first and second lane constraints define a lane within which the user vehicle travels; acquire, based on the plurality of images, a target vehicle; enable the user vehicle to pass the target vehicle if the target vehicle is determined to be in a lane different from the lane in which the user vehicle is traveling; monitor a position of the target vehicle based on the plurality of images; and cause the user vehicle to abort the pass before completion of the pass, if the target vehicle is determined to be entering the lane in which the user vehicle is traveling.

[027] Consistent with the disclosed embodiment, causing the user vehicle to abort the pass may include causing an application of brakes in the user vehicle. Causing the user vehicle to abort the pass may include causing an audible announcement. Causing the user vehicle to abort the pass may include causing the user vehicle to stop accelerating. Monitoring the position of the target vehicle may include estimating a speed of the target vehicle. At least one of the first and second lane constraints may include a line marked on a road surface, an edge of a road surface, and/or a determined midpoint of a road surface width.

[028] Consistent with another disclosed embodiment, a user vehicle may include at least one image capture device configured to acquire a plurality of images of an area in a vicinity of the user vehicle; a data interface; and at least one processing device. The at least one processing device may be

configured to: receive the plurality of images via the data interface; determine from the plurality of images a first lane constraint on a first side of the user vehicle; determine from the plurality of images a second lane constraint on a second side of the user vehicle opposite to the first side of the user vehicle, wherein the first and second lane constraints define a lane within which the user vehicle travels; acquire, based on the plurality of images, a target vehicle; enable the user vehicle to pass the target vehicle if the target vehicle is determined to be in a lane different from the lane in which the user vehicle is traveling; monitor a position of the target vehicle based on the plurality of images; and cause the user vehicle to abort the pass before completion of the pass, if the target vehicle is determined to be entering the lane in which the user vehicle is traveling.

[029] Consistent with the disclosed embodiment, causing the user vehicle to abort the pass may include causing an application of brakes in the user vehicle. Causing the user vehicle to abort the pass may include causing an audible announcement. Causing the user vehicle to abort the pass may include causing the user vehicle to stop accelerating. Monitoring the position of the target vehicle may include estimating a speed of the target vehicle. At least one of the first and second lane constraints may include a line marked on a road surface, an edge of a road surface, and/or a determined midpoint of a road surface width.

[030] Consistent with another disclosed embodiment, a method is provided for navigating a user vehicle. The method may include acquiring, using at least one image capture device, a plurality of images of an area in a vicinity of the user vehicle; determining from the plurality of images a first lane constraint on a first side of the user vehicle; determining from the plurality of images a second lane constraint on a second side of the user vehicle opposite to the first side of the user vehicle, wherein the first and second lane constraints define a lane within which the user vehicle travels; acquiring, based on the plurality of images, a target vehicle; enabling the user vehicle to pass the target vehicle if the target vehicle is determined to be in a lane different from the lane in which the user vehicle is traveling; monitoring a position of the target vehicle based on the plurality of images; and causing the user vehicle to abort the pass before completion of the pass, if the target vehicle is determined to be entering the lane in which the user vehicle is traveling.

[031] Consistent with the disclosed embodiment, causing the user vehicle to abort the pass may include causing an application of brakes in the user vehicle. Causing the user vehicle to abort the pass may include causing the user vehicle to stop accelerating. At least one of the first and second lane constraints may include a line marked on a road surface, an edge of a road surface, and/or a determined midpoint of a road surface width.

[032] Consistent with a disclosed embodiment, a driver assist navigation system is provided for a user vehicle. The system may include at least one image capture device configured to acquire a plurality of images of an area in a vicinity of the user vehicle; a data interface; and at least one processing device. The at least one processing device may be configured to: receive the plurality of images via the data interface; determine from the plurality of images a first lane constraint on a first side of the user vehicle; determine from the plurality of images a second lane constraint on a second side of the user vehicle

opposite to the first side of the user vehicle, wherein the first and second lane constraints define a lane within which the user vehicle travels; determine, based on the plurality of images, whether an encroaching vehicle is approaching from a side of the user vehicle; and cause the user vehicle to maintain a current velocity and to travel within the first and second lane constraints such that a first distance, on the side of the user vehicle that the encroaching vehicle is approaching from, is greater than a second distance.

[033] Consistent with the disclosed embodiment, the at least one processing device may be further configured to cause the user vehicle to take evasive action if analysis of the plurality of images indicates that the encroaching vehicle has crossed at least one collision threshold. The evasive action may include changing lanes, altering course, and/or braking. The at least one collision threshold may include a minimum predetermined distance to maintain between the user vehicle and the encroaching vehicle. The at least one collision threshold may include a time to collision. The at least one processing device may be configured to cause the user vehicle to return to a center of the lane, within which the user vehicle originally traveled, after completion of the evasive action. The at least one image capture device may have a field of view of at least 140 degrees. The at least one processing device may be configured to cause the user vehicle to resume a preset speed after braking in response to an encroaching vehicle. The at least one processing device may be configured to cause the user vehicle to return to a lane location within the first and second lane constraints such that the first distance between the user vehicle and the first lane constraint is substantially equal to the second distance between the user vehicle and the second lane constraint after altering course in response to an encroaching vehicle.

[034] Consistent with another disclosed embodiment, a user vehicle may include at least one image capture device configured to acquire a plurality of images of an area in a vicinity of the user vehicle; a data interface; and at least one processing device. The at least one processing device may be configured to: receive the plurality of images via the data interface; determine from the plurality of images a first lane constraint on a first side of the user vehicle; determine from the plurality of images a second lane constraint on a second side of the user vehicle opposite to the first side of the user vehicle, wherein the first and second lane constraints define a lane within which the user vehicle travels; determine, based on the plurality of images, whether an encroaching vehicle is approaching from a side of the user vehicle; and cause the user vehicle to maintain a current velocity and to travel within the first and second lane constraints such that a first distance, on the side of the user vehicle that the encroaching vehicle is approaching from, is greater than a second distance.

[035] Consistent with the disclosed embodiment, the at least one processing device may be further configured to cause the user vehicle to take evasive action if analysis of the plurality of images indicates that the encroaching vehicle has crossed at least one collision threshold. The evasive action may include changing lanes, altering course, and/or braking. The at least one collision threshold may include a minimum predetermined distance to maintain between the user vehicle and the encroaching vehicle. The at least one collision threshold may include a time to collision. The at least one processing device may be configured to cause the user vehicle to return to a center of the lane, within which the user vehicle

originally traveled, after completion of the evasive action. The at least one image capture device may have a field of view of at least 140 degrees. The at least one processing device may be configured to cause the user vehicle to resume a preset speed after braking in response to an encroaching vehicle. The at least one processing device may be configured to cause the user vehicle to return to a lane location within the first and second lane constraints such that the first distance between the user vehicle and the first lane constraint is substantially equal to the second distance between the user vehicle and the second lane constraint after altering course in response to an encroaching vehicle.

[036] Consistent with another disclosed embodiment, a method for navigating a user vehicle is provided. The method may include acquiring, using at least one image capture device, a plurality of images of an area in a vicinity of the user vehicle; determining from the plurality of images a first lane constraint on a first side of the user vehicle; determining from the plurality of images a second lane constraint on a second side of the user vehicle opposite to the first side of the user vehicle, wherein the first and second lane constraints define a lane within which the user vehicle travels; determining, based on the plurality of images, whether an encroaching vehicle is approaching from a side of the user vehicle; and causing the user vehicle to maintain a current velocity and to travel within the first and second lane constraints such that a first distance, on the side of the user vehicle that the encroaching vehicle is approaching from, is greater than a second distance.

[037] Consistent with a disclosed embodiment, a driver assist navigation system is provided for a primary vehicle. They system may include at least one image capture device configured to acquire a plurality of images of an area in a vicinity of the primary vehicle; a data interface; and at least one processing device. The at least processing device may be configured to: receive the plurality of images via the data interface; identify a target object within the plurality of images; monitor, via the plurality of images, a motion of the target object and a distance between the primary vehicle and the target object; determine an indicator of an intercept time between the primary vehicle and the target object based on the monitored motion and the distance between the primary vehicle and the target object; and cause a response in the primary vehicle based on a comparison of the intercept time to a plurality of predetermined intercept thresholds.

[038] Consistent with the disclosed embodiment, the target object may be a target vehicle traveling in a lane different from the primary vehicle. The intercept time may be based on an indicator of speed of the tracked object, as determined based on the plurality of images. The intercept time may be based on an indicator of an acceleration of the tracked object, as determined based on the plurality of images. The at least one processing device may be further configured to determine whether the target object is traveling in the same lane as the primary vehicle, and forego the response in the primary vehicle if the target object is determined to be traveling in a lane different from the primary vehicle. Determination of whether the target object is traveling in the same lane as the primary vehicle may be based on the plurality of images. Determination of whether the target object is traveling in the same lane as the primary vehicle may be based on at least one of predetermined map data or yaw rate of the primary vehicle. The response may be based on an averaged motion profile associated with the target object if the

indicator of intercept time indicates that the target object is outside a first intercept threshold relative to the vehicle. The response may be based on actual motion of the target object if the indicator of intercept time indicates that the target object is between the first intercept threshold and a second intercept threshold relative to the vehicle. The response may include an emergency avoidance action if the indicator of intercept time indicates that the target object is within the second intercept threshold. The emergency avoidance action may include changing lanes and/or emergency braking.

[039] Consistent with another disclosed embodiment, a primary vehicle may include a body; at least one image capture device configured to acquire a plurality of images of an area in a vicinity of the primary vehicle; a data interface; and at least one processing device. The at least one processing device may be configured to: receive the plurality of images via the data interface; identify a target object within the plurality of images; monitor, via the plurality of images, a motion of the target object and a distance between the primary vehicle and the target object; determine an indicator of an intercept time between the primary vehicle and the target object based on the monitored motion and the distance between the primary vehicle and the target object; and cause a response in the primary vehicle based on a comparison of the intercept time to a plurality of predetermined intercept thresholds.

[040] Consistent with the disclosed embodiment, the target object may be a target vehicle traveling in a lane different from the primary vehicle. The intercept time may be based on an indicator of speed of the tracked object, as determined based on the plurality of images. The intercept time may be based on an indicator of an acceleration of the tracked object, as determined based on the plurality of images. The at least one processing device may be further configured to determine whether the target object is traveling in the same lane as the primary vehicle, and forego the response in the primary vehicle if the target object is determined to be traveling in a lane different from the primary vehicle. Determination of whether the target object is traveling in the same lane as the primary vehicle may be based on the plurality of images. Determination of whether the target object is traveling in the same lane as the primary vehicle may be based on at least one of predetermined map data or yaw rate of the primary vehicle. The response may be based on an averaged motion profile associated with the target object if the indicator of intercept time indicates that the target object is outside a first intercept threshold relative to the vehicle. The response may be based on actual motion of the target object if the indicator of intercept time indicates that the target object is between the first intercept threshold and a second intercept threshold relative to the vehicle. The response may include an emergency avoidance action if the indicator of intercept time indicates that the target object is within the second intercept threshold. The emergency avoidance action may include changing lanes and/or emergency braking.

[041] Consistent with another disclosed embodiment, a method for navigating a primary vehicle may include acquiring, via at least one image capture device, a plurality of images of an area in a vicinity of the primary vehicle; identifying a target object within the plurality of images; monitoring, based on the plurality of images, a motion of the target object and a distance between the primary vehicle and the target object; determining an indicator of an intercept time between the primary vehicle and the target object based on the monitored motion and the distance between the primary vehicle and the target

object; and causing a response in the primary vehicle based on a comparison of the intercept time to a plurality of predetermined intercept thresholds.

[042] Consistent with a disclosed embodiment, a driver assist navigation system is provided for a vehicle. The system may include at least one image capture device configured to acquire a plurality of images of an area in a vicinity of the vehicle; a data interface; and at least one processing device. The at least one processing device may be configured to: receive the plurality of images via the data interface; identify, based on analysis of the plurality of images, a trigger for stopping the vehicle; and based on the identified trigger, cause the vehicle to stop according to a braking profile including a first segment associated with a first deceleration rate, a second segment which includes a second deceleration rate less than the first deceleration rate, and a third segment in which a level of braking is decreased as a target stopping location is approached, as determined based on the analysis of the plurality of images.

[043] Consistent with the disclosed embodiment, reaching of the target stopping location may be accompanied by a release in braking pressure. The trigger may include an object. The object may include another vehicle in front of the vehicle. The trigger may include a traffic light signal, a stop sign, and/or a speed limit sign. The at least one processing device may be further configured to provide an audible announcement identifying the trigger. The at least one processing device may be configured to cause an audible announcement indicating that the vehicle is braking.

[044] Consistent with another disclosed embodiment, a vehicle may include a body; at least one image capture device configured to acquire a plurality of images of an area in a vicinity of the vehicle; a data interface; and at least one processing device. The at least one processing device may be configured to: receive the plurality of images via the data interface; identify, based on analysis of the plurality of images, a trigger for stopping the vehicle; and based on the identified trigger, cause the vehicle to stop according to a braking profile including a first segment associated with a first deceleration rate, a second segment which includes a second deceleration rate less than the first deceleration rate, and a third segment in which a level of braking is decreased as a target stopping location is approached, as determined based on the analysis of the plurality of images.

[045] Consistent with the disclosed embodiment, reaching of the target stopping location may be accompanied by a release in braking pressure. The trigger may include an object. The object may include another vehicle in front of the vehicle. The trigger may include a traffic light signal, a stop sign, and/or a speed limit sign. The at least one processing device may be further configured to provide an audible announcement identifying the trigger. The at least one processing device may be configured to cause an audible announcement indicating that the vehicle is braking.

[046] Consistent with another disclosed embodiment, a method is provided for navigating a vehicle. The method may include acquiring, via at least one image capture plurality of images of an area in a vicinity of the vehicle; identifying, based on analysis of the plurality of images, a trigger for stopping the vehicle; and based on the identified trigger, causing the vehicle to stop according to a braking profile including a first segment associated with a first deceleration rate, a second segment which includes a second deceleration rate less than the first deceleration rate, and a third segment in which a level of

braking is decreased as a target stopping location is approached, as determined based on the analysis of the plurality of images.

[047] Consistent with other disclosed embodiments, non-transitory computer-readable storage media may store program instructions, which are executed by at least one processing device and perform any of the methods described herein.

[048] The foregoing general description and the following detailed description are exemplary and explanatory only and are not restrictive of the claims.

BRIEF DESCRIPTION OF THE DRAWINGS

[049] The accompanying drawings, which are incorporated in and constitute a part of this disclosure, illustrate various disclosed embodiments. In the drawings:

[050] FIG. 1 is a diagrammatic representation of an exemplary system consistent with the disclosed embodiments.

[051] FIG. 2A is a diagrammatic side view representation of an exemplary vehicle including a system consistent with the disclosed embodiments.

[052] FIG. 2B is a diagrammatic top view representation of the vehicle and system shown in FIG. 2A consistent with the disclosed embodiments.

[053] FIG. 2C is a diagrammatic top view representation of another embodiment of a vehicle including a system consistent with the disclosed embodiments.

[054] FIG. 2D is a diagrammatic top view representation of yet another embodiment of a vehicle including a system consistent with the disclosed embodiments.

[055] FIG. 2E is a diagrammatic top view representation of yet another embodiment of a vehicle including a system consistent with the disclosed embodiments.

[056] FIG. 2F is a diagrammatic representation of exemplary vehicle control systems consistent with the disclosed embodiments.

[057] FIG. 3A is a diagrammatic representation of an interior of a vehicle including a rearview mirror and a user interface for a vehicle imaging system consistent with the disclosed embodiments.

[058] FIG. 3B is an illustration of an example of a camera mount that is configured to be positioned behind a rearview mirror and against a vehicle windshield consistent with the disclosed embodiments.

[059] FIG. 3C is an illustration of the camera mount shown in FIG. 3B from a different perspective consistent with the disclosed embodiments.

[060] FIG. 3D is an illustration of an example of a camera mount that is configured to be positioned behind a rearview mirror and against a vehicle windshield consistent with the disclosed embodiments.

[061] FIG. 4 is an exemplary block diagram of a memory configured to store instructions for performing one or more operations consistent with the disclosed embodiments.

[062] FIG. 5A is a flowchart showing an exemplary process for causing one or more navigational responses based on monocular image analysis consistent with disclosed embodiments.

[063] FIG. 5B is a flowchart showing an exemplary process for detecting one or more vehicles and/or pedestrians in a set of images consistent with the disclosed embodiments.

[064] FIG. 5C is a flowchart showing an exemplary process for detecting road marks and/or lane geometry information in a set of images consistent with the disclosed embodiments.

[065] FIG. 5D is a flowchart showing an exemplary process for detecting traffic lights in a set of images consistent with the disclosed embodiments.

[066] FIG. 5E is a flowchart showing an exemplary process for causing one or more navigational responses based on a vehicle path consistent with the disclosed embodiments.

[067] FIG. 5F is a flowchart showing an exemplary process for determining whether a leading vehicle is changing lanes consistent with the disclosed embodiments.

[068] FIG. 6 is a flowchart showing an exemplary process for causing one or more navigational responses based on stereo image analysis consistent with the disclosed embodiments.

[069] FIG. 7 is a flowchart showing an exemplary process for causing one or more navigational responses based on an analysis of three sets of images consistent with the disclosed embodiments.

[070] FIG. 8A is a diagrammatic representation of an exemplary vehicle traveling within a first and a second lane constraint in which a lane offset condition exists on the first vehicle side consistent with the disclosed embodiments.

[071] FIG. 8B is a diagrammatic representation of an exemplary vehicle traveling within a first and a second lane constraint in which a lane offset condition exists on the second vehicle side consistent with the disclosed embodiments.

[072] FIG. 8C is a diagrammatic representation of an exemplary vehicle traveling within a first and a second lane constraint on a curved road consistent with the disclosed embodiments.

[073] FIG. 8D is a diagrammatic representation of an exemplary vehicle traveling within a first and a second lane constraint in which a lane offset condition exists on both the first vehicle side and on the second vehicle side consistent with the disclosed embodiments.

[074] FIG. 9 is a diagrammatic representation of the memory of an exemplary navigation system consistent with the disclosed embodiments.

[075] FIG. 10 is a flowchart of an exemplary method for navigating a vehicle consistent with the disclosed embodiments.

[076] FIG 11 is a diagrammatic representation of an exemplary vehicle including a navigation system traveling within a default lane consistent with the disclosed embodiments.

[077] FIG 12A is a diagrammatic representation of the memory of an exemplary navigation system consistent with the disclosed embodiments.

[078] FIG 12B is a flowchart of an exemplary process for navigating a vehicle consistent with the disclosed embodiments.

[079] FIGS. 13A and 13B are diagrammatic representations of an exemplary vehicle approaching, and navigating, a curve with one or more characteristics consistent with the disclosed embodiments.

[080] FIG. 14 is an exemplary block diagram of a memory configured to store instructions for performing one or more operations consistent with the disclosed embodiments.

[081] FIG. 15 is a flow chart showing an exemplary process for controlling the velocity of a vehicle based on a detected curve and observed characteristics of the curve consistent with disclosed embodiments.

[082] FIGS. 16A-16D are diagrammatic representations of a primary vehicle mimicking one or more actions of a leading vehicle consistent with the disclosed embodiments.

[083] FIG. 17 is an exemplary block diagram of a memory configured to store instructions for performing one or more operations consistent with the disclosed embodiments.

[084] FIG. 18 is a flow chart showing an exemplary process for causing a primary vehicle to mimic one or more actions of a leading vehicle consistent with disclosed embodiments.

[085] FIG. 19 is a flow chart showing an exemplary process for causing a primary vehicle to decline to mimic a turn of a leading vehicle consistent with disclosed embodiments.

[086] FIG. 20 is a flow chart showing an exemplary process for causing a primary vehicle to mimic or decline a turn of a leading vehicle consistent with disclosed embodiments.

[087] FIG. 21 is a flow chart showing another exemplary process for causing a primary vehicle to mimic one or more actions of a leading vehicle consistent with disclosed embodiments.

[088] FIG. 22 is a flow chart showing an exemplary process for causing a primary vehicle to mimic one or more actions of a leading vehicle based on a navigation history consistent with disclosed embodiments.

[089] FIG. 23 is a diagrammatic representation of an exemplary vehicle traveling within a first and a second lane constraint on a roadway along on which another vehicle is traveling consistent with the disclosed embodiments.

[090] FIG. 24A is a diagrammatic representation of a memory storing instructions for navigating a vehicle among encroaching vehicles consistent with the disclosed embodiments.

[091] FIG. 24B is a flowchart of an exemplary process for navigating a vehicle among encroaching vehicles consistent with the disclosed embodiments.

[092] FIG. 25 is a diagrammatic representation of an exemplary vehicle traveling within a first and a second lane constraint on a roadway along on which another vehicle is traveling consistent with the disclosed embodiments.

[093] FIG. 26 is a diagrammatic representation of a memory storing instructions for detecting and responding to traffic laterally encroaching on a vehicle consistent with the disclosed embodiments.

[094] FIG. 27 is a flowchart of an exemplary process for detecting and responding to traffic laterally encroaching on a vehicle consistent with the disclosed embodiments.

[095] FIGS. 28A and 28B are diagrammatic representations of causing a response in a primary vehicle consistent with the disclosed embodiments.

[096] FIG. 29 is an exemplary block diagram of a memory configured to store instructions for performing one or more operations consistent with the disclosed embodiments.

[097] FIG. 30 is a flow chart showing an exemplary process for causing a response in a primary vehicle consistent with disclosed embodiments.

[098] FIG. 31 is a flow chart showing an exemplary process for declining to cause a response in a primary vehicle consistent with disclosed embodiments.

[099] FIG. 32A is a diagrammatic representation of an exemplary vehicle in which an object is present in the vicinity of vehicle consistent with the disclosed embodiments.

[0100] FIG. 32B illustrates an exemplary braking profile, consistent with the disclosed embodiments.

[0101] FIG. 33 is a diagrammatic representation of the memory of an exemplary navigation system consistent with the disclosed embodiments.

[0102] FIG. 34 is a flowchart of an exemplary method for implementing a braking profile while navigating a vehicle consistent with the disclosed embodiments.

DETAILED DESCRIPTION

[0103] The following detailed description refers to the accompanying drawings. Wherever possible, the same reference numbers are used in the drawings and the following description to refer to the same or similar parts. While several illustrative embodiments are described herein, modifications, adaptations and other implementations are possible. For example, substitutions, additions or modifications may be made to the components illustrated in the drawings, and the illustrative methods described herein may be modified by substituting, reordering, removing, or adding steps to the disclosed methods. Accordingly, the following detailed description is not limited to the disclosed embodiments and examples. Instead, the proper scope is defined by the appended claims.

[0104] Disclosed embodiments provide systems and methods that use cameras to provide autonomous navigation features. In various embodiments, the system may include one, two or more cameras that monitor the environment of a vehicle. In one embodiment, the system may monitor and adjust the free space between a vehicle and the boundaries of the lane within which the vehicle is traveling. In another embodiment, the system may select a particular lane as a default lane for the vehicle to use while traveling. In another embodiment, the system may control the speed of the vehicle in different scenarios, such as while making a turn. In yet another embodiment, the system may mimic the actions of a leading vehicle. In yet another embodiment, the system may monitor a target vehicle and enable the vehicle to pass the target vehicle under certain conditions (e.g., if the target vehicle is traveling in a lane different from the lane within which the vehicle is traveling. In still yet another embodiment, the system may produce a natural feeling response to a laterally encroaching vehicle, such as a vehicle attempting to move into the lane within which the vehicle is traveling.

[0105] FIG. 1 is a block diagram representation of a system 100 consistent with the exemplary disclosed embodiments. System 100 may include various components depending on the requirements of a particular implementation. In some embodiments, system 100 may include a processing unit 110, an image acquisition unit 120, a position sensor 130, one or more memory units 140, 150, a map database 160, and a user interface 170. Processing unit 110 may include one or more processing devices. In some

embodiments, processing unit 110 may include an applications processor 180, an image processor 190, or any other suitable processing device. Similarly, image acquisition unit 120 may include any number of image acquisition devices and components depending on the requirements of a particular application. In some embodiments, image acquisition unit 120 may include one or more image capture devices (e.g., cameras), such as image capture device 122, image capture device 124, and image capture device 126. System 100 may also include a data interface 128 communicatively connecting processing device 110 to image acquisition device 120. For example, data interface 128 may include any wired and/or wireless link or links for transmitting image data acquired by image accusation device 120 to processing unit 110.

[0106] Both applications processor 180 and image processor 190 may include various types of processing devices. For example, either or both of applications processor 180 and image processor 190 may include a microprocessor, preprocessors (such as an image preprocessor), graphics processors, a central processing unit (CPU), support circuits, digital signal processors, integrated circuits, memory, or any other types of devices suitable for running applications and for image processing and analysis. In some embodiments, applications processor 180 and/or image processor 190 may include any type of single or multi-core processor, mobile device microcontroller, central processing unit, etc. Various processing devices may be used, including, for example, processors available from manufacturers such as Intel®, AMD®, etc. and may include various architectures (e.g., x86 processor, ARM®, etc.).

[0107] In some embodiments, applications processor 180 and/or image processor 190 may include any of the EyeQ series of processor chips available from Mobileye®. These processor designs each include multiple processing units with local memory and instruction sets. Such processors may include video inputs for receiving image data from multiple image sensors and may also include video out capabilities. In one example, the EyeQ2® uses 90nm-micron technology operating at 332Mhz. The EyeQ2® architecture consists of two floating point, hyper-thread 32-bit RISC CPUs (MIPS32® 34K® cores), five Vision Computing Engines (VCE), three Vector Microcode Processors (VMP®), Denali 64-bit Mobile DDR Controller, 128-bit internal Sonics Interconnect, dual 16-bit Video input and 18-bit Video output controllers, 16 channels DMA and several peripherals. The MIPS34K CPU manages the five VCEs, three VMP™ and the DMA, the second MIPS34K CPU and the multi-channel DMA as well as the other peripherals. The five VCEs, three VMP® and the MIPS34K CPU can perform intensive vision computations required by multi-function bundle applications. In another example, the EyeQ3®, which is a third generation processor and is six times more powerful that the EyeQ2®, may be used in the disclosed embodiments.

[0108] While FIG. 1 depicts two separate processing devices included in processing unit 110, more or fewer processing devices may be used. For example, in some embodiments, a single processing device may be used to accomplish the tasks of applications processor 180 and image processor 190. In other embodiments, these tasks may be performed by more than two processing devices.

[0109] Processing unit 110 may comprise various types of devices. For example, processing unit 110 may include various devices, such as a controller, an image preprocessor, a central processing unit (CPU), support circuits, digital signal processors, integrated circuits, memory, or any other types of

devices for image processing and analysis. The image preprocessor may include a video processor for capturing, digitizing and processing the imagery from the image sensors. The CPU may comprise any number of microcontrollers or microprocessors. The support circuits may be any number of circuits generally well known in the art, including cache, power supply, clock and input-output circuits. The memory may store software that, when executed by the processor, controls the operation of the system. The memory may include databases and image processing software. The memory may comprise any number of random access memories, read only memories, flash memories, disk drives, optical storage, tape storage, removable storage and other types of storage. In one instance, the memory may be separate from the processing unit 110. In another instance, the memory may be integrated into the processing unit 110.

[0110] Each memory 140, 150 may include software instructions that when executed by a processor (e.g., applications processor 180 and/or image processor 190), may control operation of various aspects of system 100. These memory units may include various databases and image processing software. The memory units may include random access memory, read only memory, flash memory, disk drives, optical storage, tape storage, removable storage and/or any other types of storage. In some embodiments, memory units 140, 150 may be separate from the applications processor 180 and/or image processor 190. In other embodiments, these memory units may be integrated into applications processor 180 and/or image processor 190.

[0111] Position sensor 130 may include any type of device suitable for determining a location associated with at least one component of system 100. In some embodiments, position sensor 130 may include a GPS receiver. Such receivers can determine a user position and velocity by processing signals broadcasted by global positioning system satellites. Position information from position sensor 130 may be made available to applications processor 180 and/or image processor 190.

[0112] User interface 170 may include any device suitable for providing information to or for receiving inputs from one or more users of system 100. In some embodiments, user interface 170 may include user input devices, including, for example, a touchscreen, microphone, keyboard, pointer devices, track wheels, cameras, knobs, buttons, etc. With such input devices, a user may be able to provide information inputs or commands to system 100 by typing instructions or information, providing voice commands, selecting menu options on a screen using buttons, pointers, or eye-tracking capabilities, or through any other suitable techniques for communicating information to system 100.

[0113] User interface 170 may be equipped with one or more processing devices configured to provide and receive information to or from a user and process that information for use by, for example, applications processor 180. In some embodiments, such processing devices may execute instructions for recognizing and tracking eye movements, receiving and interpreting voice commands, recognizing and interpreting touches and/or gestures made on a touchscreen, responding to keyboard entries or menu selections, etc. In some embodiments, user interface 170 may include a display, speaker, tactile device, and/or any other devices for providing output information to a user.

[0114] Map database 160 may include any type of database for storing map data useful to system 100. In some embodiments, map database 160 may include data relating to the position, in a reference coordinate system, of various items, including roads, water features, geographic features, businesses, points of interest, restaurants, gas stations, etc. Map database 160 may store not only the locations of such items, but also descriptors relating to those items, including, for example, names associated with any of the stored features. In some embodiments, map database 160 may be physically located with other components of system 100. Alternatively or additionally, map database 160 or a portion thereof may be located remotely with respect to other components of system 100 (e.g., processing unit 110). In such embodiments, information from map database 160 may be downloaded over a wired or wireless data connection to a network (e.g., over a cellular network and/or the Internet, etc.).

[0115] Image capture devices 122, 124, and 126 may each include any type of device suitable for capturing at least one image from an environment. Moreover, any number of image capture devices may be used to acquire images for input to the image processor. Some embodiments may include only a single image capture device, while other embodiments may include two, three, or even four or more image capture devices. Image capture devices 122, 124, and 126 will be further described with reference to FIGS. 2B-2E, below.

[0116] System 100, or various components thereof, may be incorporated into various different platforms. In some embodiments, system 100 may be included on a vehicle 200, as shown in FIG. 2A. For example, vehicle 200 may be equipped with a processing unit 110 and any of the other components of system 100, as described above relative to FIG. 1. While in some embodiments vehicle 200 may be equipped with only a single image capture device (e.g., camera), in other embodiments, such as those discussed in connection with FIGS. 2B-2E, multiple image capture devices may be used. For example, either of image capture devices 122 and 124 of vehicle 200, as shown in FIG. 2A, may be part of an ADAS (Advanced Driver Assistance Systems) imaging set.

[0117] The image capture devices included on vehicle 200 as part of the image acquisition unit 120 may be positioned at any suitable location. In some embodiments, as shown in FIGS. 2A-2E and 3A-3C, image capture device 122 may be located in the vicinity of the rearview mirror. This position may provide a line of sight similar to that of the driver of vehicle 200, which may aid in determining what is and is not visible to the driver. Image capture device 122 may be positioned at any location near the rearview mirror, but placing image capture device 122 on the driver side of the mirror may further aid in obtaining images representative of the driver's field of view and/or line of sight.

[0118] Other locations for the image capture devices of image acquisition unit 120 may also be used. For example, image capture device 124 may be located on or in a bumper of vehicle 200. Such a location may be especially suitable for image capture devices having a wide field of view. The line of sight of bumper-located image capture devices can be different from that of the driver and, therefore, the bumper image capture device and driver may not always see the same objects. The image capture devices (e.g., image capture devices 122, 124, and 126) may also be located in other locations. For example, the image capture devices may be located on or in one or both of the side mirrors of vehicle 200, on the roof

of vehicle 200, on the hood of vehicle 200, on the trunk of vehicle 200, on the sides of vehicle 200, mounted on, positioned behind, or positioned in front of any of the windows of vehicle 200, and mounted in or near light figures on the front and/or back of vehicle 200, etc.

[0119] In addition to image capture devices, vehicle 200 may include various other components of system 100. For example, processing unit 110 may be included on vehicle 200 either integrated with or separate from an engine control unit (ECU) of the vehicle. Vehicle 200 may also be equipped with a position sensor 130, such as a GPS receiver and may also include a map database 160 and memory units 140 and 150.

[0120] FIG. 2A is a diagrammatic side view representation of an exemplary vehicle imaging system consistent with the disclosed embodiments. FIG. 2B is a diagrammatic top view illustration of the embodiment shown in FIG. 2A. As illustrated in FIG. 2B, the disclosed embodiments may include a vehicle 200 including in its body a system 100 with a first image capture device 122 positioned in the vicinity of the rearview mirror and/or near the driver of vehicle 200, a second image capture device 124 positioned on or in a bumper region (e.g., one of bumper regions 210) of vehicle 200, and a processing unit 110.

[0121] As illustrated in FIG. 2C, image capture devices 122 and 124 may both be positioned in the vicinity of the rearview mirror and/or near the driver of vehicle 200. Additionally, while two image capture devices 122 and 124 are shown in FIGS. 2B and 2C, it should be understood that other embodiments may include more than two image capture devices. For example, in the embodiments shown in FIGS. 2D and 2E, first, second, and third image capture devices 122, 124, and 126, are included in the system 100 of vehicle 200.

[0122] As illustrated in FIG. 2D, image capture device 122 may be positioned in the vicinity of the rearview mirror and/or near the driver of vehicle 200, and image capture devices 124 and 126 may be positioned on or in a bumper region (e.g., one of bumper regions 210) of vehicle 200. And as shown in FIG. 2E, image capture devices 122, 124, and 126 may be positioned in the vicinity of the rearview mirror and/or near the driver seat of vehicle 200. The disclosed embodiments are not limited to any particular number and configuration of the image capture devices, and the image capture devices may be positioned in any appropriate location within and/or on vehicle 200.

[0123] It is to be understood that the disclosed embodiments are not limited to vehicles and could be applied in other contexts. It is also to be understood that disclosed embodiments are not limited to a particular type of vehicle 200 and may be applicable to all types of vehicles including automobiles, trucks, trailers, and other types of vehicles.

[0124] The first image capture device 122 may include any suitable type of image capture device. Image capture device 122 may include an optical axis. In one instance, the image capture device 122 may include an Aptina M9V024 WVGA sensor with a global shutter. In other embodiments, image capture device 122 may provide a resolution of 1280x960 pixels and may include a rolling shutter. Image capture device 122 may include various optical elements. In some embodiments one or more lenses may be included, for example, to provide a desired focal length and field of view for the image capture device.

In some embodiments, image capture device 122 may be associated with a 6mm lens or a 12mm lens. In some embodiments, image capture device 122 may be configured to capture images having a desired field-of-view (FOV) 202, as illustrated in FIG. 2D. For example, image capture device 122 may be configured to have a regular FOV, such as within a range of 40 degrees to 56 degrees, including a 46 degree FOV, 50 degree FOV, 52 degree FOV, or greater. Alternatively, image capture device 122 may be configured to have a narrow FOV in the range of 23 to 40 degrees, such as a 28 degree FOV or 36 degree FOV. In addition, image capture device 122 may be configured to have a wide FOV in the range of 100 to 180 degrees. In some embodiments, image capture device 122 may include a wide angle bumper camera or one with up to a 180 degree FOV.

[0125] The first image capture device 122 may acquire a plurality of first images relative to a scene associated with the vehicle 200. Each of the plurality of first images may be acquired as a series of image scan lines, which may be captured using a rolling shutter. Each scan line may include a plurality of pixels.

[0126] The first image capture device 122 may have a scan rate associated with acquisition of each of the first series of image scan lines. The scan rate may refer to a rate at which an image sensor can acquire image data associated with each pixel included in a particular scan line.

[0127] Image capture devices 122, 124, and 126 may contain any suitable type and number of image sensors, including CCD sensors or CMOS sensors, for example. In one embodiment, a CMOS image sensor may be employed along with a rolling shutter, such that each pixel in a row is read one at a time, and scanning of the rows proceeds on a row-by-row basis until an entire image frame has been captured. In some embodiments, the rows may be captured sequentially from top to bottom relative to the frame.

[0128] The use of a rolling shutter may result in pixels in different rows being exposed and captured at different times, which may cause skew and other image artifacts in the captured image frame. On the other hand, when the image capture device 122 is configured to operate with a global or synchronous shutter, all of the pixels may be exposed for the same amount of time and during a common exposure period. As a result, the image data in a frame collected from a system employing a global shutter represents a snapshot of the entire FOV (such as FOV 202) at a particular time. In contrast, in a rolling shutter application, each row in a frame is exposed and data is capture at different times. Thus, moving objects may appear distorted in an image capture device having a rolling shutter. This phenomenon will be described in greater detail below.

[0129] The second image capture device 124 and the third image capturing device 126 may be any type of image capture device. Like the first image capture device 122, each of image capture devices 124 and 126 may include an optical axis. In one embodiment, each of image capture devices 124 and 126 may include an Aptina M9V024 WVGA sensor with a global shutter. Alternatively, each of image capture devices 124 and 126 may include a rolling shutter. Like image capture device 122, image capture devices 124 and 126 may be configured to include various lenses and optical elements. In some embodiments, lenses associated with image capture devices 124 and 126 may provide FOVs (such as

FOVs 204 and 206) that are the same as, or narrower than, a FOV (such as FOV 202) associated with image capture device 122. For example, image capture devices 124 and 126 may have FOVs of 40 degrees, 30 degrees, 26 degrees, 23 degrees, 20 degrees, or less.

[0130] Image capture devices 124 and 126 may acquire a plurality of second and third images relative to a scene associated with the vehicle 200. Each of the plurality of second and third images may be acquired as a second and third series of image scan lines, which may be captured using a rolling shutter. Each scan line or row may have a plurality of pixels. Image capture devices 124 and 126 may have second and third scan rates associated with acquisition of each of image scan lines included in the second and third series.

[0131] Each image capture device 122, 124, and 126 may be positioned at any suitable position and orientation relative to vehicle 200. The relative positioning of the image capture devices 122, 124, and 126 may be selected to aid in fusing together the information acquired from the image capture devices. For example, in some embodiments, a FOV (such as FOV 204) associated with image capture device 124 may overlap partially or fully with a FOV (such as FOV 202) associated with image capture device 122 and a FOV (such as FOV 206) associated with image capture device 126.

[0132] Image capture devices 122, 124, and 126 may be located on vehicle 200 at any suitable relative heights. In one instance, there may be a height difference between the image capture devices 122, 124, and 126, which may provide sufficient parallax information to enable stereo analysis. For example, as shown in FIG. 2A, the two image capture devices 122 and 124 are at different heights. There may also be a lateral displacement difference between image capture devices 122, 124, and 126, giving additional parallax information for stereo analysis by processing unit 110, for example. The difference in the lateral displacement may be denoted by d_x, as shown in FIGS. 2C and 2D. In some embodiments, fore or aft displacement (e.g., range displacement) may exist between image capture devices 122, 124, and 126. For example, image capture device 122 may be located 0.5 to 2 meters or more behind image capture device 124 and/or image capture device 126. This type of displacement may enable one of the image capture devices to cover potential blind spots of the other image capture device(s).

[0133] Image capture devices 122 may have any suitable resolution capability (e.g., number of pixels associated with the image sensor), and the resolution of the image sensor(s) associated with the image capture device 122 may be higher, lower, or the same as the resolution of the image sensor(s) associated with image capture devices 124 and 126. In some embodiments, the image sensor(s) associated with image capture device 122 and/or image capture devices 124 and 126 may have a resolution of 640 x 480, 1024 x 768, 1280 x 960, or any other suitable resolution.

[0134] The frame rate (e.g., the rate at which an image capture device acquires a set of pixel data of one image frame before moving on to capture pixel data associated with the next image frame) may be controllable. The frame rate associated with image capture device 122 may be higher, lower, or the same as the frame rate associated with image capture devices 124 and 126. The frame rate associated with image capture devices 122, 124, and 126 may depend on a variety of factors that may affect the timing of the frame rate. For example, one or more of image capture devices 122, 124, and 126 may include a

selectable pixel delay period imposed before or after acquisition of image data associated with one or more pixels of an image sensor in image capture device 122, 124, and/or 126. Generally, image data corresponding to each pixel may be acquired according to a clock rate for the device (e.g., one pixel per clock cycle). Additionally, in embodiments including a rolling shutter, one or more of image capture devices 122, 124, and 126 may include a selectable horizontal blanking period imposed before or after acquisition of image data associated with a row of pixels of an image sensor in image capture device 122, 124, and/or 126. Further, one or more of image capture devices 122, 124, and/or 126 may include a selectable vertical blanking period imposed before or after acquisition of image data associated with an image frame of image capture device 122, 124, and 126.

[0135] These timing controls may enable synchronization of frame rates associated with image capture devices 122, 124, and 126, even where the line scan rates of each are different. Additionally, as will be discussed in greater detail below, these selectable timing controls, among other factors (e.g., image sensor resolution, maximum line scan rates, etc.) may enable synchronization of image capture from an area where the FOV of image capture device 122 overlaps with one or more FOVs of image capture devices 124 and 126, even where the field of view of image capture device 122 is different from the FOVs of image capture devices 124 and 126.

[0136] Frame rate timing in image capture device 122, 124, and 126 may depend on the resolution of the associated image sensors. For example, assuming similar line scan rates for both devices, if one device includes an image sensor having a resolution of 640 x 480 and another device includes an image sensor with a resolution of 1280 x 960, then more time will be required to acquire a frame of image data from the sensor having the higher resolution.

[0137] Another factor that may affect the timing of image data acquisition in image capture devices 122, 124, and 126 is the maximum line scan rate. For example, acquisition of a row of image data from an image sensor included in image capture device 122, 124, and 126 will require some minimum amount of time. Assuming no pixel delay periods are added, this minimum amount of time for acquisition of a row of image data will be related to the maximum line scan rate for a particular device. Devices that offer higher maximum line scan rates have the potential to provide higher frame rates than devices with lower maximum line scan rates. In some embodiments, one or more of image capture devices 124 and 126 may have a maximum line scan rate that is higher than a maximum line scan rate associated with image capture device 122. In some embodiments, the maximum line scan rate of image capture device 124 and/or 126 may be 1.25, 1.5, 1.75, or 2 times or more than a maximum line scan rate of image capture device 122.

[0138] In another embodiment, image capture devices 122, 124, and 126 may have the same maximum line scan rate, but image capture device 122 may be operated at a scan rate less than or equal to its maximum scan rate. The system may be configured such that one or more of image capture devices 124 and 126 operate at a line scan rate that is equal to the line scan rate of image capture device 122. In other instances, the system may be configured such that the line scan rate of image capture device 124

and/or image capture device 126 may be 1.25, 1.5, 1.75, or 2 times or more than the line scan rate of image capture device 122.

[0139] In some embodiments, image capture devices 122, 124, and 126 may be asymmetric. That is, they may include cameras having different fields of view (FOV) and focal lengths. The fields of view of image capture devices 122, 124, and 126 may include any desired area relative to an environment of vehicle 200, for example. In some embodiments, one or more of image capture devices 122, 124, and 126 may be configured to acquire image data from an environment in front of vehicle 200, behind vehicle 200, to the sides of vehicle 200, or combinations thereof.

[0140] Further, the focal length associated with each image capture device 122, 124, and/or 126 may be selectable (e.g., by inclusion of appropriate lenses etc.) such that each device acquires images of objects at a desired distance range relative to vehicle 200. For example, in some embodiments image capture devices 122, 124, and 126 may acquire images of close-up objects within a few meters from the vehicle. Image capture devices 122, 124, and 126 may also be configured to acquire images of objects at ranges more distant from the vehicle (e.g., 25 m, 50 m, 100 m, 150 m, or more). Further, the focal lengths of image capture devices 122, 124, and 126 may be selected such that one image capture device (e.g., image capture device 122) can acquire images of objects relatively close to the vehicle (e.g., within 10 m or within 20 m) while the other image capture devices (e.g., image capture devices 124 and 126) can acquire images of more distant objects (e.g., greater than 20 m, 50 m, 100 m, 150 m, etc.) from vehicle 200.

[0141] According to some embodiments, the FOV of one or more image capture devices 122, 124, and 126 may have a wide angle. For example, it may be advantageous to have a FOV of 140 degrees, especially for image capture devices 122, 124, and 126 that may be used to capture images of the area in the vicinity of vehicle 200. For example, image capture device 122 may be used to capture images of the area to the right or left of vehicle 200 and, in such embodiments, it may be desirable for image capture device 122 to have a wide FOV (e.g., at least 140 degrees).

[0142] The field of view associated with each of image capture devices 122, 124, and 126 may depend on the respective focal lengths. For example, as the focal length increases, the corresponding field of view decreases.

[0143] Image capture devices 122, 124, and 126 may be configured to have any suitable fields of view. In one particular example, image capture device 122 may have a horizontal FOV of 46 degrees, image capture device 124 may have a horizontal FOV of 23 degrees, and image capture device 126 may have a horizontal FOV in between 23 and 46 degrees. In another instance, image capture device 122 may have a horizontal FOV of 52 degrees, image capture device 124 may have a horizontal FOV of 26 degrees, and image capture device 126 may have a horizontal FOV in between 26 and 52 degrees. In some embodiments, a ratio of the FOV of image capture device 122 to the FOVs of image capture device 124 and/or image capture device 126 may vary from 1.5 to 2.0. In other embodiments, this ratio may vary between 1.25 and 2.25.

IPR2025-01035
Tesla EX1002 Page 2141

[0144] System 100 may be configured so that a field of view of image capture device 122 overlaps, at least partially or fully, with a field of view of image capture device 124 and/or image capture device 126. In some embodiments, system 100 may be configured such that the fields of view of image capture devices 124 and 126, for example, fall within (e.g., are narrower than) and share a common center with the field of view of image capture device 122. In other embodiments, the image capture devices 122, 124, and 126 may capture adjacent FOVs or may have partial overlap in their FOVs. In some embodiments, the fields of view of image capture devices 122, 124, and 126 may be aligned such that a center of the narrower FOV image capture devices 124 and/or 126 may be located in a lower half of the field of view of the wider FOV device 122.

[0145] FIG. 2F is a diagrammatic representation of exemplary vehicle control systems, consistent with the disclosed embodiments. As indicated in FIG. 2F, vehicle 200 may include throttling system 220, braking system 230, and steering system 240. System 100 may provide inputs (e.g., control signals) to one or more of throttling system 220, braking system 230, and steering system 240 over one or more data links (e.g., any wired and/or wireless link or links for transmitting data). For example, based on analysis of images acquired by image capture devices 122, 124, and/or 126, system 100 may provide control signals to one or more of throttling system 220, braking system 230, and steering system 240 to navigate vehicle 200 (e.g., by causing an acceleration, a turn, a lane shift, etc.). Further, system 100 may receive inputs from one or more of throttling system 220, braking system 230, and steering system 24 indicating operating conditions of vehicle 200 (e.g., speed, whether vehicle 200 is braking and/or turning, etc.). Further details are provided in connection with FIGS. 4-7, below.

[0146] As shown in FIG. 3A, vehicle 200 may also include a user interface 170 for interacting with a driver or a passenger of vehicle 200. For example, user interface 170 in a vehicle application may include a touch screen 320, knobs 330, buttons 340, and a microphone 350. A driver or passenger of vehicle 200 may also use handles (e.g., located on or near the steering column of vehicle 200 including, for example, turn signal handles), buttons (e.g., located on the steering wheel of vehicle 200), and the like, to interact with system 100. In some embodiments, microphone 350 may be positioned adjacent to a rearview mirror 310. Similarly, in some embodiments, image capture device 122 may be located near rearview mirror 310. In some embodiments, user interface 170 may also include one or more speakers 360 (e.g., speakers of a vehicle audio system). For example, system 100 may provide various notifications (e.g., alerts) via speakers 360.

[0147] FIGS. 3B-3D are illustrations of an exemplary camera mount 370 configured to be positioned behind a rearview mirror (e.g., rearview mirror 310) and against a vehicle windshield, consistent with disclosed embodiments. As shown in FIG. 3B, camera mount 370 may include image capture devices 122, 124, and 126. Image capture devices 124 and 126 may be positioned behind a glare shield 380, which may be flush against the vehicle windshield and include a composition of film and/or anti-reflective materials. For example, glare shield 380 may be positioned such that it aligns against a vehicle windshield having a matching slope. In some embodiments, each of image capture devices 122, 124, and 126 may be positioned behind glare shield 380, as depicted, for example, in FIG. 3D. The

disclosed embodiments are not limited to any particular configuration of image capture devices 122, 124, and 126, camera mount 370, and glare shield 380. FIG. 3C is an illustration of camera mount 370 shown in FIG. 3B from a front perspective.

[0148] As will be appreciated by a person skilled in the art having the benefit of this disclosure, numerous variations and/or modifications may be made to the foregoing disclosed embodiments. For example, not all components are essential for the operation of system 100. Further, any component may be located in any appropriate part of system 100 and the components may be rearranged into a variety of configurations while providing the functionality of the disclosed embodiments. Therefore, the foregoing configurations are examples and, regardless of the configurations discussed above, system 100 can provide a wide range of functionality to analyze the surroundings of vehicle 200 and navigate vehicle 200 in response to the analysis.

[0149] As discussed below in further detail and consistent with various disclosed embodiments, system 100 may provide a variety of features related to autonomous driving and/or driver assist technology. For example, system 100 may analyze image data, position data (e.g., GPS location information), map data, speed data, and/or data from sensors included in vehicle 200. System 100 may collect the data for analysis from, for example, image acquisition unit 120, position sensor 130, and other sensors. Further, system 100 may analyze the collected data to determine whether or not vehicle 200 should take a certain action, and then automatically take the determined action without human intervention. For example, when vehicle 200 navigates without human intervention, system 100 may automatically control the braking, acceleration, and/or steering of vehicle 200 (e.g., by sending control signals to one or more of throttling system 220, braking system 230, and steering system 240). Further, system 100 may analyze the collected data and issue warnings and/or alerts to vehicle occupants based on the analysis of the collected data.

[0150] Further, consistent with disclosed embodiments, the functionality provided by system 100 may cause vehicle 200 to take different actions to navigate vehicle 200 within a lane and/or relative to other vehicles and/or objects. For example, system 100 may adjust the positioning of vehicle 200 relative to a lane within which vehicle 200 is traveling and/or relative to objects positioned near vehicle 200, select a particular lane for vehicle 200 to use while traveling, and take action in response to an encroaching vehicle, such as a vehicle attempting to move into the lane within which vehicle 200 is traveling. Additionally, system 100 may control the speed of vehicle 200 in different scenarios, such as when vehicle 200 is making a turn. System 100 may further cause vehicle 200 to mimic the actions of a leading vehicle or monitor a target vehicle and navigate vehicle 200 so that it passes the target vehicle. Additional details regarding the various embodiments that are provided by system 100 are provided below.

[0151] Forward-Facing Multi-Imaging System

[0152] As discussed above, system 100 may provide drive assist functionality that uses a multi-camera system. The multi-camera system may use one or more cameras facing in the forward direction of a vehicle. In other embodiments, the multi-camera system may include one or more cameras facing to the

side of a vehicle or to the rear of the vehicle. In one embodiment, for example, system 100 may use a two-camera imaging system, where a first camera and a second camera (e.g., image capture devices 122 and 124) may be positioned at the front and/or the sides of a vehicle (e.g., vehicle 200). The first camera may have a field of view that is greater than, less than, or partially overlapping with, the field of view of the second camera. In addition, the first camera may be connected to a first image processor to perform monocular image analysis of images provided by the first camera, and the second camera may be connected to a second image processor to perform monocular image analysis of images provided by the second camera. The outputs (e.g., processed information) of the first and second image processors may be combined. In some embodiments, the second image processor may receive images from both the first camera and second camera to perform stereo analysis. In another embodiment, system 100 may use a three-camera imaging system where each of the cameras has a different field of view. Such a system may, therefore, make decisions based on information derived from objects located at varying distances both forward and to the sides of the vehicle. References to monocular image analysis may refer to instances where image analysis is performed based on images captured from a single point of view (e.g., from a single camera). Stereo image analysis may refer to instances where image analysis is performed based on two or more images captured with one or more variations of an image capture parameter. For example, captured images suitable for performing stereo image analysis may include images captured: from two or more different positions, from different fields of view, using different focal lengths, along with parallax information, etc.

[0153] For example, in one embodiment, system 100 may implement a three camera configuration using image capture devices 122-126. In such a configuration, image capture device 122 may provide a narrow field of view (e.g., 34 degrees, or other values selected from a range of about 20 to 45 degrees, etc.), image capture device 124 may provide a wide field of view (e.g., 150 degrees or other values selected from a range of about 100 to about 180 degrees), and image capture device 126 may provide an intermediate field of view (e.g., 46 degrees or other values selected from a range of about 35 to about 60 degrees). In some embodiments, image capture device 126 may act as a main or primary camera. Image capture devices 122-126 may be positioned behind rearview mirror 310 and positioned substantially side-by-side (e.g., 6 cm apart). Further, in some embodiments, as discussed above, one or more of image capture devices 122-126 may be mounted behind glare shield 380 that is flush with the windshield of vehicle 200. Such shielding may act to minimize the impact of any reflections from inside the car on image capture devices 122-126.

[0154] In another embodiment, as discussed above in connection with FIGS. 3B and 3C, the wide field of view camera (e.g., image capture device 124 in the above example) may be mounted lower than the narrow and main field of view cameras (e.g., image devices 122 and 126 in the above example). This configuration may provide a free line of sight from the wide field of view camera. To reduce reflections, the cameras may be mounted close to the windshield of vehicle 200, and may include polarizers on the cameras to damp reflected light.

[0155] A three camera system may provide certain performance characteristics. For example, some embodiments may include an ability to validate the detection of objects by one camera based on detection results from another camera. In the three camera configuration discussed above, processing unit 110 may include, for example, three processing devices (e.g., three EyeQ series of processor chips, as discussed above), with each processing device dedicated to processing images captured by one or more of image capture devices 122-126.

[0156] In a three camera system, a first processing device may receive images from both the main camera and the narrow field of view camera, and perform vision processing of the narrow FOV camera to, for example, detect other vehicles, pedestrians, lane marks, traffic signs, traffic lights, and other road objects. Further, the first processing device may calculate a disparity of pixels between the images from the main camera and the narrow camera and create a 3D reconstruction of the environment of vehicle 200. The first processing device may then combine the 3D reconstruction with 3D map data or with 3D information calculated based on information from another camera.

[0157] The second processing device may receive images from main camera and perform vision processing to detect other vehicles, pedestrians, lane marks, traffic signs, traffic lights, and other road objects. Additionally, the second processing device may calculate a camera displacement and, based on the displacement, calculate a disparity of pixels between successive images and create a 3D reconstruction of the scene (e.g., a structure from motion). The second processing device may send the structure from motion based 3D reconstruction to the first processing device to be combined with the stereo 3D images.

[0158] The third processing device may receive images from the wide FOV camera and process the images to detect vehicles, pedestrians, lane marks, traffic signs, traffic lights, and other road objects. The third processing device may further execute additional processing instructions to analyze images to identify objects moving in the image, such as vehicles changing lanes, pedestrians, etc.

[0159] In some embodiments, having streams of image-based information captured and processed independently may provide an opportunity for providing redundancy in the system. Such redundancy may include, for example, using a first image capture device and the images processed from that device to validate and/or supplement information obtained by capturing and processing image information from at least a second image capture device.

[0160] In some embodiments, system 100 may use two image capture devices (e.g., image capture devices 122 and 124) in providing navigation assistance for vehicle 200 and use a third image capture device (e.g., image capture device 126) to provide redundancy and validate the analysis of data received from the other two image capture devices. For example, in such a configuration, image capture devices 122 and 124 may provide images for stereo analysis by system 100 for navigating vehicle 200, while image capture device 126 may provide images for monocular analysis by system 100 to provide redundancy and validation of information obtained based on images captured from image capture device 122 and/or image capture device 124. That is, image capture device 126 (and a corresponding processing device) may be considered to provide a redundant sub-system for providing a check on the analysis

derived from image capture devices 122 and 124 (e.g., to provide an automatic emergency braking (AEB) system).

[0161] One of skill in the art will recognize that the above camera configurations, camera placements, number of cameras, camera locations, etc., are examples only. These components and others described relative to the overall system may be assembled and used in a variety of different configurations without departing from the scope of the disclosed embodiments. Further details regarding usage of a multi-camera system to provide driver assist and/or autonomous vehicle functionality follow below.

[0162] FIG. 4 is an exemplary functional block diagram of memory 140 and/or 150, which may be stored/programmed with instructions for performing one or more operations consistent with the disclosed embodiments. Although the following refers to memory 140, one of skill in the art will recognize that instructions may be stored in memory 140 and/or 150.

[0163] As shown in FIG. 4, memory 140 may store a monocular image analysis module 402, a stereo image analysis module 404, a velocity and acceleration module 406, and a navigational response module 408. The disclosed embodiments are not limited to any particular configuration of memory 140. Further, application processor 180 and/or image processor 190 may execute the instructions stored in any of modules 402-408 included in memory 140. One of skill in the art will understand that references in the following discussions to processing unit 110 may refer to application processor 180 and image processor 190 individually or collectively. Accordingly, steps of any of the following processes may be performed by one or more processing devices.

[0164] In one embodiment, monocular image analysis module 402 may store instructions (such as computer vision software) which, when executed by processing unit 110, performs monocular image analysis of a set of images acquired by one of image capture devices 122, 124, and 126. In some embodiments, processing unit 110 may combine information from a set of images with additional sensory information (e.g., information from radar) to perform the monocular image analysis. As described in connection with FIGS. 5A-5D below, monocular image analysis module 402 may include instructions for detecting a set of features within the set of images, such as lane markings, vehicles, pedestrians, road signs, highway exit ramps, traffic lights, hazardous objects, and any other feature associated with an environment of a vehicle. Based on the analysis, system 100 (e.g., via processing unit 110) may cause one or more navigational responses in vehicle 200, such as a turn, a lane shift, a change in acceleration, and the like, as discussed below in connection with navigational response module 408.

[0165] In one embodiment, stereo image analysis module 404 may store instructions (such as computer vision software) which, when executed by processing unit 110, performs stereo image analysis of first and second sets of images acquired by a combination of image capture devices selected from any of image capture devices 122, 124, and 126. In some embodiments, processing unit 110 may combine information from the first and second sets of images with additional sensory information (e.g., information from radar) to perform the stereo image analysis. For example, stereo image analysis module 404 may include instructions for performing stereo image analysis based on a first set of images acquired

by image capture device 124 and a second set of images acquired by image capture device 126. As described in connection with FIG. 6 below, stereo image analysis module 404 may include instructions for detecting a set of features within the first and second sets of images, such as lane markings, vehicles, pedestrians, road signs, highway exit ramps, traffic lights, hazardous objects, and the like. Based on the analysis, processing unit 110 may cause one or more navigational responses in vehicle 200, such as a turn, a lane shift, a change in acceleration, and the like, as discussed below in connection with navigational response module 408.

[0166] In one embodiment, velocity and acceleration module 406 may store software configured to analyze data received from one or more computing and electromechanical devices in vehicle 200 that are configured to cause a change in velocity and/or acceleration of vehicle 200. For example, processing unit 110 may execute instructions associated with velocity and acceleration module 406 to calculate a target speed for vehicle 200 based on data derived from execution of monocular image analysis module 402 and/or stereo image analysis module 404. Such data may include, for example, a target position, velocity, and/or acceleration, the position and/or speed of vehicle 200 relative to a nearby vehicle, pedestrian, or road object, position information for vehicle 200 relative to lane markings of the road, and the like. In addition, processing unit 110 may calculate a target speed for vehicle 200 based on sensory input (e.g., information from radar) and input from other systems of vehicle 200, such as throttling system 220, braking system 230, and/or steering system 240 of vehicle 200. Based on the calculated target speed, processing unit 110 may transmit electronic signals to throttling system 220, braking system 230, and/or steering system 240 of vehicle 200 to trigger a change in velocity and/or acceleration by, for example, physically depressing the brake or easing up off the accelerator of vehicle 200.

[0167] In one embodiment, navigational response module 408 may store software executable by processing unit 110 to determine a desired navigational response based on data derived from execution of monocular image analysis module 402 and/or stereo image analysis module 404. Such data may include position and speed information associated with nearby vehicles, pedestrians, and road objects, target position information for vehicle 200, and the like. Additionally, in some embodiments, the navigational response may be based (partially or fully) on map data, a predetermined position of vehicle 200, and/or a relative velocity or a relative acceleration between vehicle 200 and one or more objects detected from execution of monocular image analysis module 402 and/or stereo image analysis module 404. Navigational response module 408 may also determine a desired navigational response based on sensory input (e.g., information from radar) and inputs from other systems of vehicle 200, such as throttling system 220, braking system 230, and steering system 240 of vehicle 200. Based on the desired navigational response, processing unit 110 may transmit electronic signals to throttling system 220, braking system 230, and steering system 240 of vehicle 200 to trigger a desired navigational response by, for example, turning the steering wheel of vehicle 200 to achieve a rotation of a predetermined angle. In some embodiments, processing unit 110 may use the output of navigational response module 408 (e.g., the desired navigational response) as an input to execution of velocity and acceleration module 406 for calculating a change in speed of vehicle 200.

[0168] FIG. 5A is a flowchart showing an exemplary process 500A for causing one or more navigational responses based on monocular image analysis, consistent with disclosed embodiments. At step 510, processing unit 110 may receive a plurality of images via data interface 128 between processing unit 110 and image acquisition unit 120. For instance, a camera included in image acquisition unit 120 (such as image capture device 122 having field of view 202) may capture a plurality of images of an area forward of vehicle 200 (or to the sides or rear of a vehicle, for example) and transmit them over a data connection (e.g., digital, wired, USB, wireless, Bluetooth, etc.) to processing unit 110. Processing unit 110 may execute monocular image analysis module 402 to analyze the plurality of images at step 520, as described in further detail in connection with FIGS. 5B-5D below. By performing the analysis, processing unit 110 may detect a set of features within the set of images, such as lane markings, vehicles, pedestrians, road signs, highway exit ramps, traffic lights, and the like.

[0169] Processing unit 110 may also execute monocular image analysis module 402 to detect various road hazards at step 520, such as, for example, parts of a truck tire, fallen road signs, loose cargo, small animals, and the like. Road hazards may vary in structure, shape, size, and color, which may make detection of such hazards more challenging. In some embodiments, processing unit 110 may execute monocular image analysis module 402 to perform multi-frame analysis on the plurality of images to detect road hazards. For example, processing unit 110 may estimate camera motion between consecutive image frames and calculate the disparities in pixels between the frames to construct a 3D-map of the road. Processing unit 110 may then use the 3D-map to detect the road surface, as well as hazards existing above the road surface.

[0170] At step 530, processing unit 110 may execute navigational response module 408 to cause one or more navigational responses in vehicle 200 based on the analysis performed at step 520 and the techniques as described above in connection with FIG. 4. Navigational responses may include, for example, a turn, a lane shift, a change in acceleration, and the like. In some embodiments, processing unit 110 may use data derived from execution of velocity and acceleration module 406 to cause the one or more navigational responses. Additionally, multiple navigational responses may occur simultaneously, in sequence, or any combination thereof. For instance, processing unit 110 may cause vehicle 200 to shift one lane over and then accelerate by, for example, sequentially transmitting control signals to steering system 240 and throttling system 220 of vehicle 200. Alternatively, processing unit 110 may cause vehicle 200 to brake while at the same time shifting lanes by, for example, simultaneously transmitting control signals to braking system 230 and steering system 240 of vehicle 200.

[0171] FIG. 5B is a flowchart showing an exemplary process 500B for detecting one or more vehicles and/or pedestrians in a set of images, consistent with disclosed embodiments. Processing unit 110 may execute monocular image analysis module 402 to implement process 500B. At step 540, processing unit 110 may determine a set of candidate objects representing possible vehicles and/or pedestrians. For example, processing unit 110 may scan one or more images, compare the images to one or more predetermined patterns, and identify within each image possible locations that may contain objects of interest (e.g., vehicles, pedestrians, or portions thereof). The predetermined patterns may be

designed in such a way to achieve a high rate of "false hits" and a low rate of "misses." For example, processing unit 110 may use a low threshold of similarity to predetermined patterns for identifying candidate objects as possible vehicles or pedestrians. Doing so may allow processing unit 110 to reduce the probability of missing (e.g., not identifying) a candidate object representing a vehicle or pedestrian.

[0172] At step 542, processing unit 110 may filter the set of candidate objects to exclude certain candidates (e.g., irrelevant or less relevant objects) based on classification criteria. Such criteria may be derived from various properties associated with object types stored in a database (e.g., a database stored in memory 140). Properties may include object shape, dimensions, texture, position (e.g., relative to vehicle 200), and the like. Thus, processing unit 110 may use one or more sets of criteria to reject false candidates from the set of candidate objects.

[0173] At step 544, processing unit 110 may analyze multiple frames of images to determine whether objects in the set of candidate objects represent vehicles and/or pedestrians. For example, processing unit 110 may track a detected candidate object across consecutive frames and accumulate frame-by-frame data associated with the detected object (e.g., size, position relative to vehicle 200, etc.). Additionally, processing unit 110 may estimate parameters for the detected object and compare the object's frame-by-frame position data to a predicted position.

[0174] At step 546, processing unit 110 may construct a set of measurements for the detected objects. Such measurements may include, for example, position, velocity, and acceleration values (relative to vehicle 200) associated with the detected objects. In some embodiments, processing unit 110 may construct the measurements based on estimation techniques using a series of time-based observations such as Kalman filters or linear quadratic estimation (LQE), and/or based on available modeling data for different object types (e.g., cars, trucks, pedestrians, bicycles, road signs, etc.). The Kalman filters may be based on a measurement of an object's scale, where the scale measurement is proportional to a time to collision (e.g., the amount of time for vehicle 200 to reach the object). Thus, by performing steps 540-546, processing unit 110 may identify vehicles and pedestrians appearing within the set of captured images and derive information (e.g., position, speed, size) associated with the vehicles and pedestrians. Based on the identification and the derived information, processing unit 110 may cause one or more navigational responses in vehicle 200, as described in connection with FIG. 5A, above.

[0175] At step 548, processing unit 110 may perform an optical flow analysis of one or more images to reduce the probabilities of detecting a "false hit" and missing a candidate object that represents a vehicle or pedestrian. The optical flow analysis may refer to, for example, analyzing motion patterns relative to vehicle 200 in the one or more images associated with other vehicles and pedestrians, and that are distinct from road surface motion. Processing unit 110 may calculate the motion of candidate objects by observing the different positions of the objects across multiple image frames, which are captured at different times. Processing unit 110 may use the position and time values as inputs into mathematical models for calculating the motion of the candidate objects. Thus, optical flow analysis may provide another method of detecting vehicles and pedestrians that are nearby vehicle 200. Processing unit 110

may perform optical flow analysis in combination with steps 540-546 to provide redundancy for detecting vehicles and pedestrians and increase the reliability of system 100.

[0176] FIG. 5C is a flowchart showing an exemplary process 500C for detecting road marks and/or lane geometry information in a set of images, consistent with disclosed embodiments. Processing unit 110 may execute monocular image analysis module 402 to implement process 500C. At step 550, processing unit 110 may detect a set of objects by scanning one or more images. To detect segments of lane markings, lane geometry information, and other pertinent road marks, processing unit 110 may filter the set of objects to exclude those determined to be irrelevant (e.g., minor potholes, small rocks, etc.). At step 552, processing unit 110 may group together the segments detected in step 550 belonging to the same road mark or lane mark. Based on the grouping, processing unit 110 may develop a model to represent the detected segments, such as a mathematical model.

[0177] At step 554, processing unit 110 may construct a set of measurements associated with the detected segments. In some embodiments, processing unit 110 may create a projection of the detected segments from the image plane onto the real-world plane. The projection may be characterized using a 3rd-degree polynomial having coefficients corresponding to physical properties such as the position, slope, curvature, and curvature derivative of the detected road. In generating the projection, processing unit 110 may take into account changes in the road surface, as well as pitch and roll rates associated with vehicle 200. In addition, processing unit 110 may model the road elevation by analyzing position and motion cues present on the road surface. Further, processing unit 110 may estimate the pitch and roll rates associated with vehicle 200 by tracking a set of feature points in the one or more images.

[0178] At step 556, processing unit 110 may perform multi-frame analysis by, for example, tracking the detected segments across consecutive image frames and accumulating frame-by-frame data associated with detected segments. As processing unit 110 performs multi-frame analysis, the set of measurements constructed at step 554 may become more reliable and associated with an increasingly higher confidence level. Thus, by performing steps 550-556, processing unit 110 may identify road marks appearing within the set of captured images and derive lane geometry information. Based on the identification and the derived information, processing unit 110 may cause one or more navigational responses in vehicle 200, as described in connection with FIG. 5A, above.

[0179] At step 558, processing unit 110 may consider additional sources of information to further develop a safety model for vehicle 200 in the context of its surroundings. Processing unit 110 may use the safety model to define a context in which system 100 may execute autonomous control of vehicle 200 in a safe manner. To develop the safety model, in some embodiments, processing unit 110 may consider the position and motion of other vehicles, the detected road edges and barriers, and/or general road shape descriptions extracted from map data (such as data from map database 160). By considering additional sources of information, processing unit 110 may provide redundancy for detecting road marks and lane geometry and increase the reliability of system 100.

[0180] FIG. 5D is a flowchart showing an exemplary process 500D for detecting traffic lights in a set of images, consistent with disclosed embodiments. Processing unit 110 may execute monocular

image analysis module 402 to implement process 500D. At step 560, processing unit 110 may scan the set of images and identify objects appearing at locations in the images likely to contain traffic lights. For example, processing unit 110 may filter the identified objects to construct a set of candidate objects, excluding those objects unlikely to correspond to traffic lights. The filtering may be done based on various properties associated with traffic lights, such as shape, dimensions, texture, position (e.g., relative to vehicle 200), and the like. Such properties may be based on multiple examples of traffic lights and traffic control signals and stored in a database. In some embodiments, processing unit 110 may perform multi-frame analysis on the set of candidate objects reflecting possible traffic lights. For example, processing unit 110 may track the candidate objects across consecutive image frames, estimate the real-world position of the candidate objects, and filter out those objects that are moving (which are unlikely to be traffic lights). In some embodiments, processing unit 110 may perform color analysis on the candidate objects and identify the relative position of the detected colors appearing inside possible traffic lights.

[0181] At step 562, processing unit 110 may analyze the geometry of a junction. The analysis may be based on any combination of: (i) the number of lanes detected on either side of vehicle 200, (ii) markings (such as arrow marks) detected on the road, and (iii) descriptions of the junction extracted from map data (such as data from map database 160). Processing unit 110 may conduct the analysis using information derived from execution of monocular analysis module 402. In addition, Processing unit 110 may determine a correspondence between the traffic lights detected at step 560 and the lanes appearing near vehicle 200.

[0182] As vehicle 200 approaches the junction, at step 564, processing unit 110 may update the confidence level associated with the analyzed junction geometry and the detected traffic lights. For instance, the number of traffic lights estimated to appear at the junction as compared with the number actually appearing at the junction may impact the confidence level. Thus, based on the confidence level, processing unit 110 may delegate control to the driver of vehicle 200 in order to improve safety conditions. By performing steps 560-564, processing unit 110 may identify traffic lights appearing within the set of captured images and analyze junction geometry information. Based on the identification and the analysis, processing unit 110 may cause one or more navigational responses in vehicle 200, as described in connection with FIG. 5A, above.

[0183] FIG. 5E is a flowchart showing an exemplary process 500E for causing one or more navigational responses in vehicle 200 based on a vehicle path, consistent with the disclosed embodiments. At step 570, processing unit 110 may construct an initial vehicle path associated with vehicle 200. The vehicle path may be represented using a set of points expressed in coordinates (x, z), and the distance d_i between two points in the set of points may fall in the range of 1 to 5 meters. In one embodiment, processing unit 110 may construct the initial vehicle path using two polynomials, such as left and right road polynomials. Processing unit 110 may calculate the geometric midpoint between the two polynomials and offset each point included in the resultant vehicle path by a predetermined offset (e.g., a smart lane offset), if any (an offset of zero may correspond to travel in the middle of a lane). The offset may be in a direction perpendicular to a segment between any two points in the vehicle path. In another

embodiment, processing unit 110 may use one polynomial and an estimated lane width to offset each point of the vehicle path by half the estimated lane width plus a predetermined offset (e.g., a smart lane offset).

[0184] At step 572, processing unit 110 may update the vehicle path constructed at step 570. Processing unit 110 may reconstruct the vehicle path constructed at step 570 using a higher resolution, such that the distance d_k between two points in the set of points representing the vehicle path is less than the distance d_l described above. For example, the distance d_k may fall in the range of 0.1 to 0.3 meters. Processing unit 110 may reconstruct the vehicle path using a parabolic spline algorithm, which may yield a cumulative distance vector S corresponding to the total length of the vehicle path (i.e., based on the set of points representing the vehicle path).

[0185] At step 574, processing unit 110 may determine a look-ahead point (expressed in coordinates as (x_l, z_l)) based on the updated vehicle path constructed at step 572. Processing unit 110 may extract the look-ahead point from the cumulative distance vector S, and the look-ahead point may be associated with a look-ahead distance and look-ahead time. The look-ahead distance, which may have a lower bound ranging from 10 to 20 meters, may be calculated as the product of the speed of vehicle 200 and the look-ahead time. For example, as the speed of vehicle 200 decreases, the look-ahead distance may also decrease (e.g., until it reaches the lower bound). The look-ahead time, which may range from 0.5 to 1.5 seconds, may be inversely proportional to the gain of one or more control loops associated with causing a navigational response in vehicle 200, such as the heading error tracking control loop. For example, the gain of the heading error tracking control loop may depend on the bandwidth of a yaw rate loop, a steering actuator loop, car lateral dynamics, and the like. Thus, the higher the gain of the heading error tracking control loop, the lower the look-ahead time.

[0186] At step 576, processing unit 110 may determine a heading error and yaw rate command based on the look-ahead point determined at step 574. Processing unit 110 may determine the heading error by calculating the arctangent of the look-ahead point, e.g., arctan (x_l / z_l). Processing unit 110 may determine the yaw rate command as the product of the heading error and a high-level control gain. The high-level control gain may be equal to: (2 / look-ahead time), if the look-ahead distance is not at the lower bound. Otherwise, the high-level control gain may be equal to: (2 * speed of vehicle 200 / look-ahead distance).

[0187] FIG. 5F is a flowchart showing an exemplary process 500F for determining whether a leading vehicle is changing lanes, consistent with the disclosed embodiments. At step 580, processing unit 110 may determine navigation information associated with a leading vehicle (e.g., a vehicle traveling ahead of vehicle 200). For example, processing unit 110 may determine the position, velocity (e.g., direction and speed), and/or acceleration of the leading vehicle, using the techniques described in connection with FIGS. 5A and 5B, above. Processing unit 110 may also determine one or more road polynomials, a look-ahead point (associated with vehicle 200), and/or a snail trail (e.g., a set of points describing a path taken by the leading vehicle), using the techniques described in connection with FIG. 5E, above.

[0188] At step 582, processing unit 110 may analyze the navigation information determined at step 580. In one embodiment, processing unit 110 may calculate the distance between a snail trail and a road polynomial (e.g., along the trail). If the variance of this distance along the trail exceeds a predetermined threshold (for example, 0.1 to 0.2 meters on a straight road, 0.3 to 0.4 meters on a moderately curvy road, and 0.5 to 0.6 meters on a road with sharp curves), processing unit 110 may determine that the leading vehicle is likely changing lanes. In the case where multiple vehicles are detected traveling ahead of vehicle 200, processing unit 110 may compare the snail trails associated with each vehicle. Based on the comparison, processing unit 110 may determine that a vehicle whose snail trail does not match with the snail trails of the other vehicles is likely changing lanes. Processing unit 110 may additionally compare the curvature of the snail trail (associated with the leading vehicle) with the expected curvature of the road segment in which the leading vehicle is traveling. The expected curvature may be extracted from map data (e.g., data from map database 160), from road polynomials, from other vehicles' snail trails, from prior knowledge about the road, and the like. If the difference in curvature of the snail trail and the expected curvature of the road segment exceeds a predetermined threshold, processing unit 110 may determine that the leading vehicle is likely changing lanes.

[0189] In another embodiment, processing unit 110 may compare the leading vehicle's instantaneous position with the look-ahead point (associated with vehicle 200) over a specific period of time (e.g., 0.5 to 1.5 seconds). If the distance between the leading vehicle's instantaneous position and the look-ahead point varies during the specific period of time, and the cumulative sum of variation exceeds a predetermined threshold (for example, 0.3 to 0.4 meters on a straight road, 0.7 to 0.8 meters on a moderately curvy road, and 1.3 to 1.7 meters on a road with sharp curves), processing unit 110 may determine that the leading vehicle is likely changing lanes. In another embodiment, processing unit 110 may analyze the geometry of the snail trail by comparing the lateral distance traveled along the trail with the expected curvature of the snail trail. The expected radius of curvature may be determined according to the calculation: $(\delta_z^2 + \delta_x^2) / 2 / (\delta_x)$, where δ_x represents the lateral distance traveled and δ_z represents the longitudinal distance traveled. If the difference between the lateral distance traveled and the expected curvature exceeds a predetermined threshold (e.g., 500 to 700 meters), processing unit 110 may determine that the leading vehicle is likely changing lanes. In another embodiment, processing unit 110 may analyze the position of the leading vehicle. If the position of the leading vehicle obscures a road polynomial (e.g., the leading vehicle is overlaid on top of the road polynomial), then processing unit 110 may determine that the leading vehicle is likely changing lanes. In the case where the position of the leading vehicle is such that, another vehicle is detected ahead of the leading vehicle and the snail trails of the two vehicles are not parallel, processing unit 110 may determine that the (closer) leading vehicle is likely changing lanes.

[0190] At step 584, processing unit 110 may determine whether or not leading vehicle 200 is changing lanes based on the analysis performed at step 582. For example, processing unit 110 may make the determination based on a weighted average of the individual analyses performed at step 582. Under such a scheme, for example, a decision by processing unit 110 that the leading vehicle is likely changing

lanes based on a particular type of analysis may be assigned a value of "1" (and "0" to represent a determination that the leading vehicle is not likely changing lanes). Different analyses performed at step 582 may be assigned different weights, and the disclosed embodiments are not limited to any particular combination of analyses and weights.

[0191] FIG. 6 is a flowchart showing an exemplary process 600 for causing one or more navigational responses based on stereo image analysis, consistent with disclosed embodiments. At step 610, processing unit 110 may receive a first and second plurality of images via data interface 128. For example, cameras included in image acquisition unit 120 (such as image capture devices 122 and 124 having fields of view 202 and 204) may capture a first and second plurality of images of an area forward of vehicle 200 and transmit them over a digital connection (e.g., USB, wireless, Bluetooth, etc.) to processing unit 110. In some embodiments, processing unit 110 may receive the first and second plurality of images via two or more data interfaces. The disclosed embodiments are not limited to any particular data interface configurations or protocols.

[0192] At step 620, processing unit 110 may execute stereo image analysis module 404 to perform stereo image analysis of the first and second plurality of images to create a 3D map of the road in front of the vehicle and detect features within the images, such as lane markings, vehicles, pedestrians, road signs, highway exit ramps, traffic lights, road hazards, and the like. Stereo image analysis may be performed in a manner similar to the steps described in connection with FIGS. 5A-5D, above. For example, processing unit 110 may execute stereo image analysis module 404 to detect candidate objects (e.g., vehicles, pedestrians, road marks, traffic lights, road hazards, etc.) within the first and second plurality of images, filter out a subset of the candidate objects based on various criteria, and perform multi-frame analysis, construct measurements, and determine a confidence level for the remaining candidate objects. In performing the steps above, processing unit 110 may consider information from both the first and second plurality of images, rather than information from one set of images alone. For example, processing unit 110 may analyze the differences in pixel-level data (or other data subsets from among the two streams of captured images) for a candidate object appearing in both the first and second plurality of images. As another example, processing unit 110 may estimate a position and/or velocity of a candidate object (e.g., relative to vehicle 200) by observing that the object appears in one of the plurality of images but not the other or relative to other differences that may exist relative to objects appearing if the two image streams. For example, position, velocity, and/or acceleration relative to vehicle 200 may be determined based on trajectories, positions, movement characteristics, etc. of features associated with an object appearing in one or both of the image streams.

[0193] At step 630, processing unit 110 may execute navigational response module 408 to cause one or more navigational responses in vehicle 200 based on the analysis performed at step 620 and the techniques as described above in connection with FIG. 4. Navigational responses may include, for example, a turn, a lane shift, a change in acceleration, a change in velocity, braking, and the like. In some embodiments, processing unit 110 may use data derived from execution of velocity and acceleration

module 406 to cause the one or more navigational responses. Additionally, multiple navigational responses may occur simultaneously, in sequence, or any combination thereof.

[0194] FIG. 7 is a flowchart showing an exemplary process 700 for causing one or more navigational responses based on an analysis of three sets of images, consistent with disclosed embodiments. At step 710, processing unit 110 may receive a first, second, and third plurality of images via data interface 128. For instance, cameras included in image acquisition unit 120 (such as image capture devices 122, 124, and 126 having fields of view 202, 204, and 206) may capture a first, second, and third plurality of images of an area forward and/or to the side of vehicle 200 and transmit them over a digital connection (e.g., USB, wireless, Bluetooth, etc.) to processing unit 110. In some embodiments, processing unit 110 may receive the first, second, and third plurality of images via three or more data interfaces. For example, each of image capture devices 122, 124, 126 may have an associated data interface for communicating data to processing unit 110. The disclosed embodiments are not limited to any particular data interface configurations or protocols.

[0195] At step 720, processing unit 110 may analyze the first, second, and third plurality of images to detect features within the images, such as lane markings, vehicles, pedestrians, road signs, highway exit ramps, traffic lights, road hazards, and the like. The analysis may be performed in a manner similar to the steps described in connection with FIGS. 5A-5D and 6, above. For instance, processing unit 110 may perform monocular image analysis (e.g., via execution of monocular image analysis module 402 and based on the steps described in connection with FIGS. 5A-5D, above) on each of the first, second, and third plurality of images. Alternatively, processing unit 110 may perform stereo image analysis (e.g., via execution of stereo image analysis module 404 and based on the steps described in connection with FIG. 6, above) on the first and second plurality of images, the second and third plurality of images, and/or the first and third plurality of images. The processed information corresponding to the analysis of the first, second, and/or third plurality of images may be combined. In some embodiments, processing unit 110 may perform a combination of monocular and stereo image analyses. For example, processing unit 110 may perform monocular image analysis (e.g., via execution of monocular image analysis module 402) on the first plurality of images and stereo image analysis (e.g., via execution of stereo image analysis module 404) on the second and third plurality of images. The configuration of image capture devices 122, 124, and 126—including their respective locations and fields of view 202, 204, and 206—may influence the types of analyses conducted on the first, second, and third plurality of images. The disclosed embodiments are not limited to a particular configuration of image capture devices 122, 124, and 126, or the types of analyses conducted on the first, second, and third plurality of images.

[0196] In some embodiments, processing unit 110 may perform testing on system 100 based on the images acquired and analyzed at steps 710 and 720. Such testing may provide an indicator of the overall performance of system 100 for certain configurations of image capture devices 122, 124, and 126. For example, processing unit 110 may determine the proportion of "false hits" (e.g., cases where system 100 incorrectly determined the presence of a vehicle or pedestrian) and "misses."

[0197] At step 730, processing unit 110 may cause one or more navigational responses in vehicle 200 based on information derived from two of the first, second, and third plurality of images. Selection of two of the first, second, and third plurality of images may depend on various factors, such as, for example, the number, types, and sizes of objects detected in each of the plurality of images. Processing unit 110 may also make the selection based on image quality and resolution, the effective field of view reflected in the images, the number of captured frames, the extent to which one or more objects of interest actually appear in the frames (e.g., the percentage of frames in which an object appears, the proportion of the object that appears in each such frame, etc.), and the like.

[0198] In some embodiments, processing unit 110 may select information derived from two of the first, second, and third plurality of images by determining the extent to which information derived from one image source is consistent with information derived from other image sources. For example, processing unit 110 may combine the processed information derived from each of image capture devices 122, 124, and 126 (whether by monocular analysis, stereo analysis, or any combination of the two) and determine visual indicators (e.g., lane markings, a detected vehicle and its location and/or path, a detected traffic light, etc.) that are consistent across the images captured from each of image capture devices 122, 124, and 126. Processing unit 110 may also exclude information that is inconsistent across the captured images (e.g., a vehicle changing lanes, a lane model indicating a vehicle that is too close to vehicle 200, etc.). Thus, processing unit 110 may select information derived from two of the first, second, and third plurality of images based on the determinations of consistent and inconsistent information.

[0199] Navigational responses may include, for example, a turn, a lane shift, a change in acceleration, and the like. Processing unit 110 may cause the one or more navigational responses based on the analysis performed at step 720 and the techniques as described above in connection with FIG. 4. Processing unit 110 may also use data derived from execution of velocity and acceleration module 406 to cause the one or more navigational responses. In some embodiments, processing unit 110 may cause the one or more navigational responses based on a relative position, relative velocity, and/or relative acceleration between vehicle 200 and an object detected within any of the first, second, and third plurality of images. Multiple navigational responses may occur simultaneously, in sequence, or any combination thereof.

[0200] Smart Lane Offset

[0201] System 100 may provide driver assist functionality that monitors and adjusts the free space between vehicle 200 and boundaries (e.g., lane boundaries) within which vehicle 200 is traveling. A lane may refer to a designated or intended travel path of a vehicle and may have marked (e.g., lines on a road) or unmarked boundaries (e.g., an edge of a road, a road barrier, guard rail, parked vehicles, etc.). For instance, as a default, system 100 may maximize or increase the free space between vehicle 200 and the current lane boundaries. Further, under certain conditions, system 100 may offset vehicle 200 toward one side of the current lane of travel without leaving the lane. For example, where vehicle 200 is traveling around a curve, system 100 may decrease the offset towards the inside of the curve (e.g., adjust the position of vehicle 200 so that it is closer to the inside of the curve). As another example, where

obstacles—such as parked cars, pedestrians, or cyclists—are present on one side of the lane, system 100 may increase the offset on the side of vehicle 200 where the obstacles are located (e.g., adjust the position of vehicle 200 so that it is further from the obstacles).

[0202] FIG. 8A illustrates vehicle 200 traveling on a roadway 800 in which the disclosed systems and methods for identifying lane constraints and operating vehicle 200 within the lane constraints may be used. As shown, vehicle 200 may have a first vehicle side 802, which may be a first distance 805 from a first lane constraint 810. Similarly, vehicle 200 may have a second vehicle side 812 opposite from first vehicle side 802, and second vehicle side 812 may be a second distance 815 from second lane constraint 820. In this manner, first lane constraint 810 and second lane constraint 820 may define a lane within which vehicle 200 may travel.

[0203] Processing unit 110 may be configured to determine first lane constraint 810 and second lane constraint 820 based on a plurality of images acquired by image capture device 122–126 that processing unit 110 may receive via data interface 128. According to some embodiments, first lane constraint 810 and/or second lane constraint 820 may be identified by visible lane boundaries, such as dashed or solid lines marked on a road surface. Additionally or alternatively, first lane constraint 810 and/or second lane constraint 820 may include an edge of a road surface or a barrier. Additionally or alternatively, first lane constraint 810 and/or second lane constrain 820 may include markers (e.g., Botts' dots). According to some embodiments, processing unit 110 may determine first lane constraint 810 and/or second lane constraint 820 by identifying a midpoint of a road surface width. According to some embodiments, if processing unit 110 identifies only first lane constraint 810, processing unit 110 may estimate second lane constraint 820, such as based on an estimated lane width or road width. Processing unit 110 may identify lane constraints in this manner when, for example, lines designating road lanes are not painted or otherwise labeled.

[0204] Detection of first lane constraint 810 and/or second lane constraint 820 may include processing unit 110 determining their 3D models in camera coordinate system. For example, the 3D models of first lane constraint 810 and/or second lane constraint 820 may be described by a third-degree polynomial. In addition to 3D modeling of first lane constraint 810 and/or second lane constraint 820, processing unit 110 may perform multi-frame estimation of host motion parameters, such as the speed, yaw and pitch rates, and acceleration of vehicle 200. Optionally, processing unit 110 may detect static and moving vehicles and their position, heading, speed, and acceleration, all relative to vehicle 200. Processing unit 110 may further determine a road elevation model to transform all of the information acquired from the plurality of images into 3D space.

[0205] Generally, as a default condition, vehicle 200 may travel relatively centered within first and second lane constraints 810 and/or 820. However, in some circumstances, environmental factors may make this undesirable or unfeasible, such as when objects or structures are present on one side of the road. Thus, there may be circumstances in which it may be desirable or advantageous for vehicle 200 to be closer to one lane constraint or the other. Processing unit 110 may also be configured to determine whether such circumstances, called lane offset conditions, exist based on the plurality of images.

[0206] To determine whether lane offset conditions exist, processing unit 110 may be configured to determine the presence of one or more objects 825 in the vicinity of vehicle 200. For example object 825 may comprise another vehicle, such as a car, truck or motorcycle traveling on roadway 800. Processing unit 110 may determine, for each object 825, an offset profile. The offset profile may include a determination of whether in its current and predicted position object 825 will be within a predefined range of vehicle 200. If processing unit 110 determines that object 825 is or will be within a predefined range of vehicle 200, processing unit 110 may determine whether there is enough space within first lane constraint 810 and second lane constraint 820, for vehicle 200 to bypass object 825. If there is not enough space, processing unit 110 may execute a lane change. If there is enough space, processing unit 110 may determine whether there is enough time to bypass object 825 before the distance between vehicle 200 and object 825 closes. If there is enough time, processing unit 110 may initiate and or activate the offset maneuver to bypass object 825. The offset maneuver may be executed by processing unit 110 so that the movement of vehicle 200 is smooth and comfortable for the driver. For example, the offset slew rate may be approximately 0.15 to 0.75 m/sec. The offset maneuver may be executed so that the maximum amplitude of the offset maneuver will occur when the gap between vehicle 200 and object 825 closes. If there is not enough time, processing unit 110 may initiate braking (e.g., by transmitting electronic signals to braking system 230) and then initiate offset maneuver.

[0207] After each offset profile is set for each object 825, processing unit may combine offset profiles such that the maximum lateral distance is kept from each object 825 that vehicle 200 is bypassing. That is, offset maneuvers may be modified and/or executed such that the lateral distance between vehicle 200 and each object 825 that vehicle 200 is bypassing is maximized.

[0208] Additionally or alternatively, object 825 may be a parked or stationary vehicle, a wall, or a person, such as pedestrian or cycling traffic. Processing unit 110 may determine a lane offset condition exists based on certain characteristics of object 825. For example, processing unit 110 may determine object 825 constitutes a lane offset condition if the height of object 825 exceeds a predetermined threshold, such as 10 cm from a road surface. In this manner, processing unit 110 may be configured to filter out objects that would not present a lane offset condition, such as small pieces of debris.

[0209] Additionally or alternatively, processing unit 110 may be configured to determine whether a lane offset condition exists on first vehicle side 802 based on a position of a target object 830 on vehicle first side 802. Target object 830 may include one or more objects that constitute a lane offset condition. Additionally or alternatively, target object 830 may not constitute a lane offset condition. For example, target object 830 may be a street sign or other object a sufficient distance from the travel lane or occurring with sufficient infrequency to not constitute a lane offset condition. Processing unit 110 may be configured to conclude a lane offset condition does not exist if such a target object 830 is detected.

[0210] Processing unit 110 may be configured to cause vehicle 200 to travel such that first distance 805 and second distance 810 are substantially different to avoid or stay farther away from object 825. For example, if a lane offset condition exists on first vehicle side 802, processing unit 110 may be configured to cause vehicle 200 to travel within first lane constraint 810 and second lane constraint 820

such that first distance 805 is greater than second distance 815. This is illustrated, for example, in FIG. 8A. Alternatively, if a lane offset condition exists on second vehicle side 812, processing unit 110 may create or execute an offset profile that is configured to cause vehicle 200 to travel within first lane constraint 810 and second lane constraint 820 such that first distance 805 is less than second distance 815. This is illustrated, for example, in FIG 8B.

[0211] As another example, a parked vehicle may be located on one side of vehicle 200 and a pedestrian may be located on the other side of vehicle 200. In such a situation, system 100 may determine that is desirable to reduce the distance between vehicle 200 and the parked vehicle, in order to provide more space between vehicle 200 and the pedestrian. Accordingly, processing unit 110 may cause vehicle 200 to travel such that the distance between the parked vehicle is reduced.

[0212] The identity of first vehicle side 802 and second vehicle side 812 need not be static, such that at different points in time, processing unit 110 may identify first vehicle side 802 as the driver's side or as the passenger's side of vehicle 200. For example, the identity of first vehicle side 802 may change depending on the presence of one or more objects 825 on that side of vehicle 200, such that if one lane offset condition exists based on object 825, it exists on first vehicle side 802. In such circumstances, processing unit 110 may create or execute an offset profile that is configured to cause vehicle 200 to travel within first lane constraint 810 and second lane constraint 820 such that first distance 805, which is greater than second distance 815, is provided toward object 825.

[0213] According to some embodiments, when a lane offset condition exists on first vehicle side 802, processing unit 110 may create an offset profile configured to cause vehicle 200 to travel within first lane constraint 810 and second lane constraint 820 such that first distance 805 is at least 1.25 times greater than second distance 815. Additionally or alternatively, when a lane offset condition exists on first vehicle side 802, processing unit 110 may create an offset profile that is configured to cause vehicle 200 to travel within first lane constraint 810 and second lane constraint 820 such that first distance 805 is at least 2 times greater than second distance 815.

[0214] In some embodiments, as shown in FIG. 8C, processing unit 110 may determine a lane offset condition exists on both first vehicle side 802 and on second vehicle side 812. Processing unit 110 may then create an offset profile for this offset condition that is configured to cause vehicle 200 to travel within first lane constraint 810 and second lane constraint 820 such that first distance 805 is substantially the same as second distance 815.

[0215] Processing unit 110 may be configured so that the offset profiles for moving objects 825 as well as stationary objects 825 are prioritized. For example, processing unit 110 may prioritize offset profiles to keep a predefined distance between vehicle 200 and moving objects 825 and/or static objects 825. Processing unit 200 may prioritize these offset conditions over those offset conditions based on certain lane characteristics, such as a curve. The last priority lane offset condition may include mimicking a lead vehicle.

[0216] Processing unit 110 may factor offset profiles or offset conditions into a desired look-ahead point, which may be located at the middle of the lane defined by first lane constraint 810 and

second lane constraint 820. Processing unit 110 may compute and implement a yaw rate command based on the look-ahead point and the offset profiles. The yaw rate command may be used to compute a torque command based on the yaw rate command and the yaw rate of vehicle 200 measured by using a gyroscope. Processing unit 110 may transmit the torque command to a steering system (e.g., steering system 240) of vehicle 200.

[0217] According to some embodiments, input from a driver of vehicle 200, such as via user interface 170, may override processing unit 110. For example, a user input may override the control of processing unit 110 to cause vehicle 200 to travel within first lane constraint 810 and second lane constraint 820 such that first distance 805 is greater than second distance 815.

[0218] Additionally or alternatively, processing unit 110 may be configured to determine, based on the plurality of images captured by image capture device 122, whether a lane offset condition is substantially non-existent. This may include circumstances in which one or more objects 825 below a certain size threshold are detected, one or more objects 825 detected are outside of a predetermined distance from the lane constraint, and/or when no objects 825 are detected. Under such circumstances, processing unit 110 may be configured to cause vehicle 200 to travel within first lane constraint 810 and second lane constraint 820 such that first distance 805 is equal to or substantially equal to second distance 815.

[0219] A lane offset condition may include a curved road, as illustrated in FIG. 8D. Processing unit 110 may be configured to cause vehicle 200 to travel within first lane constraint 810 and second lane constraint 820 such that first distance 805 is toward the outside of the curved road relative to vehicle 200 and second distance 815 is toward an inside of the curved road relative to vehicle 200. For example, first distance 805 may be less than second distance 815.

[0220] FIG. 9 is an exemplary block diagram of memory 140 and/or 150, which may store instructions for performing one or more operations consistent with disclosed embodiments. As illustrated in FIG. 9, memory 140 may store one or more modules for performing the lane offset condition detection and responses described herein. For example, memory 140 may store a lane constraint module 910 and a lane offset module 920. Application processor 180 and/or image processor 190 may execute the instructions stored in any of modules 910 and 920 included in memory 140. One of skill in the art will understand that references in the following discussions to processing unit 110 may refer to application processor 180 and image processor 190 individually or collectively. Accordingly, steps of any of the following processes may be performed by one or more processing devices.

[0221] Lane constraint module 910 may store instructions which, when executed by processing unit 110, may detect and define first lane constraint 810 and second lane constraint 820. For example, lane offset module 910 may process the plurality of images received from at least one image capture device 122–124 to detect first lane constraint 810 and second lane constraint 820. As discussed above, this may include identifying painted lane lines and/or measuring a midpoint of a road surface.

[0222] Lane offset module 920 may store instructions which, when executed by processing unit 110, may detect the presence of a lane offset condition and/or identify whether lane offset condition is

present on first vehicle side 802 and/or second vehicle side 812. For example, lane offset module 920 may process the plurality of images to detect the presence of object(s) 825 on first vehicle side 802 and/or second vehicle side 812. Lane offset module 920 may process the plurality of images to detect a curve in the road on which vehicle 200 is traveling. Additionally or alternatively, lane offset module 920 may receive information from another module or other system indicative of the presence of object(s) 825 and/or a curved lane. Lane offset module 920 may execute control to change the position of vehicle 200 to first lane constraint 810 and/or second lane constraint 820. For example, if lane offset module 920 determines a lane offset condition only on first vehicle side 802, lane offset module 920 may move vehicle 200 closer to second lane constraint 820. On the other hand, if lane offset module 920 determines a lane offset condition only on first vehicle side 812, lane offset module 920 may move vehicle 200 closer to first lane constraint 810.

[0223] Fig. 10 illustrates a process 1000 for navigating vehicle 200, consistent with disclosed embodiments. Process 1000 may identify lane constraints that define a lane of travel for vehicle travel. Process 1000 include causing vehicle 200 to travel closer to one or the other lane constraint, such as first lane constraint 810 or second lane constraint 820, in response to detecting a lane offset condition. In this manner, process 1000 may be used to drive vehicle 200 within lane constraints as well as account for environmental factors that may make it more desirable to shift vehicle 200 within first lane constraint 810 and second lane constraint 820.

[0224] At step 1010, process 1000 may include acquiring, using at least one image capture device 122, 124, and/or 126, a plurality of images of an area in the vicinity of vehicle 200. For example, processing unit 110 may receive the plurality of images may through data interface 128. For example, processing unit 110 may be configured to determine the presence of one or more objects 825 on the side of the road. For example, object 825 may be a parked or stationary vehicle, a wall, or a person, such as pedestrian or cycling traffic. Processing unit 110 may determine if a lane offset condition exists based on certain characteristics of object 825. For example, processing unit 110 may determine that object 825 constitutes a lane offset condition if the height of object 825 exceeds a predetermined threshold, such as 10 cm from a road surface. In this manner, processing unit 110 may be configured to filter out objects that would not present a lane offset condition, such as small pieces of debris.

[0225] Additionally or alternatively, processing unit 110 may be configured to determine whether a lane offset condition exists on first vehicle side 802 based on a position of a target object 830 on vehicle first side 802. Target object 830 may be one or more objects that constitute a lane offset condition. Additionally or alternatively, target object 830 may not constitute a lane offset condition. For example, target object 830 may be a road barrier or a street sign. Processing unit 110 may be configured to conclude a lane offset condition does not exist if such a target object 830 is detected.

[0226] At step 1020, process 1000 may determine from the plurality of images a first lane constraint on first vehicle side 802 and a second lane constraint on second vehicle side 812. For example, processing unit 110 may be configured to determine first lane constraint 810 and second lane constraint 820 based on the plurality of images received via data interface 128.

[0227] At step 1030, process 1000 may determine whether a lane offset condition exists on first vehicle side 802. If a lane offset condition does exist on first vehicle side 802, at step 1040, process 1000 may include causing vehicle 200 to travel within first lane constraint 810 and second lane constraint 820 such that second distance 815 is less than first distance 805. Processing unit 110 may be configured to cause vehicle 200 to travel such that first distance 805 and second distance 810 are substantially different to avoid or stay farther away from object 825. For example, if a lane offset condition exists on first vehicle side 802, processing unit 110 may be configured to cause vehicle 200 to travel within first lane constraint 810 and second lane constraint 820 such that first distance 805 is greater than second distance 815. This is illustrated, for example, in FIG. 8A. Alternatively, if a lane offset condition exists on second vehicle side 812, processing unit 110 may be configured to cause vehicle 200 to travel within first lane constraint 810 and second lane constraint 820 such that first distance 805 is less than second distance 815. This is illustrated, for example, in FIG 8B. For example, to navigate vehicle 200 according to process 1000, processing unit 110 may transmit electronic signals to one or more of throttling system 220, braking system 230, and/or steering system 240 of vehicle 200.

[0228] If a lane offset condition does not exist on first vehicle side 802, in step 1050, method may include determining whether lane offset condition exists on second vehicle side 812. If a lane offset condition exists on second vehicle side 812, the method may include causing vehicle 200 to travel between first lane constraint 810 and second lane constraint 820 such that first distance 805 is less than second distance 815.

[0229] Navigating a Vehicle to a Default Lane

[0230] System 100 may provide driver assist functionality that monitors the location of vehicle 200 in a current lane of travel and moves vehicle 200 into a predetermined default travel lane if the current lane of travel is not the predetermined default travel lane. The predetermined default travel lane may be defined by a user input and/or as a result of processing images received from at least one image capture device 122–126.

[0231] System 100 may also provide notification of an impending lane change of vehicle 200 to the predetermined default travel lane to the driver and passengers of vehicle 200 and/or other drivers. For example, system 100 may activate a turn signal positioned at or near one of bumper regions 210. Additionally or alternatively, system 100 may sound an audible notification, such as through speakers 360. Vehicle 200 may use system 100 to select a particular lane as predetermined default travel lane when vehicle is traveling. When the current lane within which vehicle 200 is traveling—e.g., the current lane of travel—differs from the predetermined default travel lane, system 100 may cause vehicle 200 to make a lane change, e.g., into the predetermined default travel lane.

[0232] FIG. 11 illustrates vehicle 200 traveling in a current lane of travel 1110 of roadway 800. According to some embodiments, vehicle 200 may have a predetermined default travel lane 1120. For example, predetermined default travel lane 1120 may be the right-most lane of roadway 800. Navigation system 100 may be configured to determine whether vehicle 200 is traveling in predetermined default travel lane 1120 and, if not, cause vehicle 200 to change to predetermined default travel lane 1120. For

example, processing unit 110 may be configured to compare current lane of travel 1110 with predetermined default travel lane 1120 and cause vehicle 200 to return to predetermined default travel lane 1120.

[0233] According to some embodiments, processing unit 110 may detect an object 1130 in predetermined default travel lane 1120 based on a plurality of images acquired by one or more of image capture devices 122–126. Processing unit 110 may detect the position and speed of vehicle 200 relative to object 1130 by analyzing the images using techniques described in connection with FIGS. 5A-5D, above. According to some embodiments, processing unit 110 may determine whether vehicle 200 should pass object 1130. This may be desirable if, for example, the speed and/or acceleration of vehicle 200 relative to object 1130 exceeds a certain threshold.

[0234] FIG. 12A is an exemplary block diagram of memory 140, which may store instructions for performing one or more operations consistent with disclosed embodiments. As illustrated in FIG. 12A, memory 140 may store one or more modules for performing the default travel lane and current travel lane detection and responses described herein. For example, memory 140 may store a current lane detection module 1210, a default lane detection module 1220, and an action module 1230.

[0235] Current lane detection module 1210 may store instructions which, when executed by processing unit 110, may detect and define current lane of travel 1110. For example, processing unit 110 may execute current lane detection module 1212 to process the plurality of images received from at least one image capture device 122–124 and detect current lane of travel 1110. This may include detecting the relative position of vehicle 200 with respect to the edge of roadway 800, a midpoint of roadway 800, and/or lane markers, such as painted lane lines. Processing unit 110 may detect the position of vehicle 200 relative to roadway 800 by analyzing the images using techniques described in connection with FIGS. 5A-5D, above.

[0236] Default lane detection module 1220 may store instructions which, when executed by processing unit 110, may identify predetermined default travel lane 1120 and compare default lane detection module 1220 to current lane of travel 1110 identified by current lane detection module 1210. Default lane detection module 1220 may identify predetermined default travel lane 1120 based upon a user input and/or the plurality of images received from at least one image capture device 122–124. For example, a user may select a default lane through voice commands received by speakers 360 or by making a selection on a menu displayed on touch screen 320.

[0237] In some embodiments, predetermined default travel lane 1120 may be the right-most travel lane, or it may be the lane that has the more desirable features. For example, default lane detection module 1220 may include instructions to select the lane with less traffic, the lane in which vehicles are traveling closest to speed of vehicle 200, and/or a lane closest to an approaching exit or street to which vehicle 200 will turn. In some embodiments, predetermined default travel lane 1120 may be determined based on data received from position sensor 130, such as a global positioning system.

[0238] Action module 1230 may store instructions which, when executed by processing unit 110, may cause a response to the identification of current lane of travel 1110 and predetermined default

travel lane 1120. For example, processing unit 110 may execute action module 1230 to cause vehicle 200 to change lanes if current lane of travel 1110 is not the same as predetermined default travel lane 1120. Additionally or alternatively, action module 1230 may initiate a notification of the lane change, such as activating turn signal 210 and or causing an audible announcement.

[0239] Action module 1230 may include instructions that cause processing unit 110 to determine whether vehicle 200 should move out of predetermined default travel lane 1120. For example, action module 1230 may determine that object 1130 in predetermined default travel lane 1120 should be bypassed by vehicle 200.

[0240] Action module 1230 may further include instructions that cause processing unit 110 to determine whether it is safe to make a lane change. For example, prior to executing a lane change, processing unit 110 may evaluate determine one or more characteristics of roadway 800 based on, for example, analysis of the plurality of images conducted using techniques described in connection with FIGS. 5A-5D, above. If the analysis indicates conditions are not safe to change lanes, processing unit 110 may determine that vehicle 200 should stay in the current lane.

[0241] Action module 1230 may include additional instructions for manipulating vehicle 200 to maneuver out of and return to predetermined default travel lane 1120, such as for bypassing object 1130. When executing these instructions, processing unit 110 may estimate a location of predetermined default travel lane 1120 using estimated motion of vehicle 200. This may be advantageous in circumstances in which predetermined default travel lane 1120 does not remain detectable by image capture devices 122--124.

[0242] Processing unit 110 may be configured to execute an offset profile that offsets vehicle 200 from predetermined default travel lane 1120 by a full lane width, which may be estimated based on the distance between detected lane markers. The offset maneuver defined by offset profile may be executed by processing unit 110 so that the movement of vehicle 200 is smooth and comfortable for the driver. For example, the offset slew rate may be approximately 0.15 to 0.75 m/sec. During the offset maneuver, processing unit 110 may execute instructions from action module 1230 that switch to following the center of current lane of travel 1110. These instructions may include gradually transitioning from following the predicted lane with offset to following current lane of travel 1110. A gradual transition may be accomplished by defining desired look-ahead point so that it is not allowed to change in time more than the recommended slew rate, which may be around 0.25 m/sec.

[0243] The instructions for transitioning vehicle 200 from predetermined default travel lane 1120 may be used to transition vehicle 200 back into predetermined default travel lane. For example, processing unit 110 may be configured to execute an offset profile that offsets vehicle 200 from current lane of travel 1110 by a full lane width, which may be estimated based on the distance between detected lane markers. The offset maneuver defined by offset profile may be executed by processing unit 110 so that the movement of vehicle 200 is smooth and comfortable for the driver. For example, the offset slew rate may be approximately 0.15 to 0.75 m/sec. During the offset maneuver, processing unit 110 may execute instructions from action module 1230 that switch to following the center of predetermined default

travel lane 1120. These instructions may include gradually transitioning from following the predicted lane with offset to following predetermined default travel lane 1120. A gradual transition may be accomplished by defining desired look-ahead point so that it is not allowed to change in time more than the recommended slew rate, which may be around 0.25 m/sec.

[0244] At one or more of the steps for transitioning vehicle 200 between two lanes, processing unit 110 may compute and implement a yaw rate command based on the look-ahead point and the offset profiles. The yaw rate command may be used to compute a torque command based on the yaw rate command and the yaw rate of vehicle 200 measured using a gyroscope. Processing unit 110 may transmit a torque command to a steering system (e.g., steering system 240) of vehicle 200.

[0245] FIG. 12B illustrates a process 1250 for navigating vehicle 200 to a default lane consistent with disclosed embodiments. According to some embodiments, process 1250 may be implemented by one or more components of navigation system 100, such as at least one processing unit 110. Process 1250 may identify current lane of travel 1110 of vehicle 200 and compare it with predetermined default travel lane 1120 to determine whether vehicle 200 is traveling within predetermined default travel lane 1120. If vehicle 200 is not traveling in predetermined default travel lane 1120, processing unit 110 may cause vehicle 200 to change lanes so that it navigates to default travel lane 1120.

[0246] At step 1260, one or more of image capture devices 122–124 may acquire a plurality of images of an area in a vicinity of vehicle 200. Processing unit 110 may receive the plurality of images via data interface 128.

[0247] At step 1270, processing unit 110 may execute current lane detection module 1210 detect and define current lane of travel 1110. For example, processing unit 110 may process the plurality of images to, for example, detect the relative position of vehicle 200 with respect to the edge of roadway 100, a midpoint of roadway 100, and/or painted lane markers. Processing unit 110 may detect the position of vehicle 200 relative to roadway 800 by analyzing the images using techniques described in connection with FIGS. 5A-5D, above.

[0248] At step 1280, processing unit 110 may execute default lane detection module 1220 to identify predetermined default travel lane 1120 and compare default lane detection module 1220 to current lane of travel 1110 identified by current lane detection module 1210. Default lane detection module 1220 may identify predetermined default travel lane 1120 based upon a user input and/or the plurality of images received from at least one image capture device 122–124.

[0249] For example, as discussed above, processing unit 110 may determine predetermined default travel lane 1120 based on any number of factors. Predetermined default travel lane 1120 may be the right-most lane among the plurality of travel lanes 1110 and 1120. Additionally or alternatively, predetermined default travel lane 1120 may be determined based on an input received from a user via user interface 170, by processing the plurality of images, and/or based on data received from position sensor 130, such as a global positioning system. Predetermined default travel lane 1120 may be determined once, once per vehicle trip, or on regular intervals. For example, predetermined default travel lane 1120 may be determined dynamically in response to conditions at a given location.

[0250] If current lane 1110 is not the same as predetermined default travel lane 1120, processing unit 110 may execute action module 1230 to cause vehicle 100 to navigate to default travel lane 1120. For example, processing unit 110 may transmit electronic signals to one or more of throttling system 220, braking system 230, and/or steering system 240 of vehicle 200 to trigger the desired response. For example, processing unit 110 may cause steering system 240 to turn the steering wheel of vehicle 200 to achieve a rotation of a predetermined angle.

[0251] Further, prior to executing a lane change, processing unit 110 may determine whether it is safe (e.g., there are no vehicles or objects in the way) to change lanes. As discussed above, processing unit 110 may evaluate one or more characteristics of roadway 800 based on, for example, analysis of the plurality of images conducted using techniques described in connection with FIGS. 5A-5D, above. If conditions are not safe to change lanes, processing unit 110 may determine that vehicle 200 should stay in the current lane.

[0252] In some embodiments, execution of action module 1230 may initiate a notification of the lane change. For example, processing unit 110 may cause a signal to activate a turn signal and/or cause an audible announcement via speakers 360. Accordingly, such notification may occur prior to vehicle 200 changing lanes. In other embodiments, execution of action module 1230 may initiate a notification to a driver of vehicle 200 that vehicle 200 is not traveling in a default lane without causing the lane change to occur. Accordingly, in such an embodiment, the driver of vehicle 200 may determine whether to manually take action and steer vehicle 200 to change lanes.

[0253] In some embodiments, system 100 may notify the user of vehicle 200 and/or other drivers in the vicinity of vehicle 200 that vehicle 200 will be changing lanes if vehicle 200 will be moved to predetermined default travel lane 1120. For example, processing unit 110 may activate a turn signal of vehicle 200 prior to causing vehicle 200 to change lanes. Additionally or alternatively, an audible announcement to notify other drivers in the vicinity may be caused by processing unit 110. The audible announcement may be transmitted via, for example, Bluetooth, to receivers included in other nearby vehicles. Additionally or alternatively, at least one processing unit 110 may cause an audible indicator to notify the driver of vehicle 200 prior to causing vehicle 200 to switch lanes. In this manner, driver of vehicle 200 can anticipate the control system 100 will exert on vehicle 200.

[0254] Controlling Velocity of a Turning Vehicle

[0255] System 100 may provide driver assist functionality that controls the velocity (i.e., speed and/or direction) of vehicle 200 in different scenarios, such as while making a turn (e.g., through a curve). For example, system 100 may be configured to use a combination of map, position, and/or visual data to control the velocity of vehicle 200 when turning. In particular, system 100 may control the velocity of vehicle 200 as it approaches a curve, while navigating a curve, and/or as it exits a curve. System 100 may consider different factors to control the velocity depending on the position of vehicle 200 relative to the curve at a given time. For example, system 100 may initially cause vehicle 200 to slow down in response to learning that a curve is located a certain distance ahead of vehicle 200. While vehicle 200 turns through

the curve, however, system 100 may cause vehicle 200 to accelerate and/or charge direction based on an analysis of the characteristics of the curve.

[0256] FIGS. 13A and 13B are diagrammatic representations of a vehicle (e.g., vehicle 200) approaching, and navigating, a curve with one or more characteristics on road 1300, consistent with the disclosed embodiments. As illustrated in FIG. 13A, visual indicators, such as road sign 1302 located near road 1300, may inform vehicle 200 that a curve lies ahead. In response to the warning provided by road sign 1302, a driver of vehicle 200 and/or a system 100 providing driver assist functionality of vehicle 200 may adjust the velocity of vehicle 200 (e.g., by slowing down and/or steering) to safely navigate the curve.

[0257] As vehicle 200 approaches the curve, system 100 may detect the lane width 1306 and the curve radius 1308 by using image capture devices 122 and/or 124 (which may be cameras) of vehicle 200. Based on the curve radius 1308, the lane width 1306, and other characteristics associated with the curve detected using image capture devices 122 and/or 124, system 100 may adjust the velocity of vehicle 200. Specifically, system 100 may adjust the velocity as vehicle 200 approaches the curve and/or while vehicle 200 navigates the curve. System 100 may also adjust the velocity as vehicle 200 exits the curve, in response to, for example, traffic light 1304 appearing after the curve. Further detail regarding adjustments to the velocity of vehicle 200 and detection of the lane width 1306, the radius of curvature or curve radius 1308, and characteristics associated with the curve are described in connection with FIGS. 14 and 15, below.

[0258] In some embodiments, system 100 may recognize a curve to be navigated based on map data and/or vehicle position information (e.g., GPS data). System 100 may determine an initial target velocity for the vehicle based on one or more characteristics of the curve as reflected in the map data. System 100 may adjust a velocity of the vehicle to the initial target velocity and determine, based on one or more images acquired by one or more of image capture devices 122-126, one or more observed characteristics of the curve. System 100 may determine an updated target velocity based on the one or more observed characteristics of the curve and adjust the velocity of the vehicle to the updated target velocity.

[0259] FIG. 14 is an exemplary block diagram of a memory configured to store instructions for performing one or more operations consistent with the disclosed embodiments. As indicated in FIG. 14, memory 140 may store a curve recognition module 1402, a characteristic observation module 1404, and a velocity module 1406. The disclosed embodiments are not limited to any particular configuration of memory 140. Further, processing unit 110 may execute the instructions stored in any of modules 1402-1406 included in memory 140.

[0260] In one embodiment, curve recognition module 1402 may store software instructions (such as computer vision software) which, when executed by processing unit 110, detects a curve by, for example, analyzing one or more sets of images and/or using map and/or position data (e.g., data stored in map database 160). The image sets may be acquired by one or more of image capture devices 122, 124, and 126. Based on the analysis, system 100 (e.g., via processing unit 110) may cause a change in velocity

of vehicle 200. For example, processing unit 110 may cause vehicle 200 to reduce its speed by a predetermined amount and/or adjust its direction by a particular angle if processing unit 110 detects the presence of a curve located within a minimum threshold distance ahead of vehicle 200.

[0261] In one embodiment, characteristic observation module 1404 may store software instructions (such as computer vision software) which, when executed by processing unit 110, observes characteristics associated with a curve detected by system 100 (e.g., via execution of curve recognition module 1402). Processing unit 110 may observe characteristics associated with a detected curve by analyzing one or more sets of images acquired by one or more of image capture devices 122, 124, and 126 and/or using map and/or position data (e.g., data stored in map database 160). The analysis may yield information associated with the curve, such as curve radius 1308, lane width 1306, a degree of curvature, a rate of change in curvature, a degree of banking, a length or arc length of the curve, and the like. These characteristics may include estimated values (e.g., curve characteristics calculated using preexisting data and/or mathematical models based on such data) and actual values (e.g., curve characteristics calculated by analyzing captured images of the curve). Based on the analysis, processing unit 110 may cause a change in velocity of vehicle 200. For example, processing unit 110 may cause vehicle 200 to reduce its speed and/or adjust its direction by a particular angle in view of a high rate of change in curvature associated with a curve located 25 meters ahead of vehicle 200.

[0262] In one embodiment, velocity module 1406 may store software instructions configured to analyze data from one or more computing and electromechanical devices configured to determine a target velocity and cause a change in velocity of vehicle 200 to the target velocity. For example, processing unit 110 may execute velocity module 1406 to calculate a target velocity for vehicle 200 based on data derived from execution of curve recognition module 1402 and characteristic observation module 1404. Such data may include, for example, an initial target position and initial velocity, an updated target position and updated velocity, a final target position and final velocity, and the like. In addition, processing unit 110 may calculate a velocity for vehicle 200 based on input from other systems of vehicle 200, such as a throttling system 220, braking system 230, and/or steering system 240 of vehicle 200. Based on the calculated target velocity, processing unit 110 may transmit electronic signals (e.g., via a controller area network bus ("CAN bus")) to throttling system 220, braking system 230, and/or steering system 240 of vehicle 200 to trigger a change in the speed and/or direction of vehicle 200 by, for example, physically depressing the brake, easing up off the accelerator of vehicle 200, or steering vehicle 200 in a particular direction (e.g., at a particular angle). An increase in speed may be associated with a corresponding acceleration (e.g., between 0.2 m/sec^2 and 3.0 m/sec^2). Conversely, a decrease in speed may be associated with a corresponding deceleration. In addition, the acceleration or deceleration may be based on the road type (e.g., highway, city street, country road, etc.), the presence of any speed constraints nearby (e.g., sharp curves, traffic lights), as well as a road width or lane width 1306. For purposes of this disclosure, deceleration may refer to an acceleration having a negative value.

[0263] FIG. 15 is a flow chart showing an exemplary process 1500 for controlling the velocity of a vehicle based on a detected curve and observed characteristics of the curve and/or map data regarding

the curve consistent with disclosed embodiments. At step 1510, processing unit 110 may receive a plurality of images via data interface 128 between processing unit 110 and image acquisition unit 120. For instance, a camera included in image acquisition unit 120 (such as image capture device 122) may capture a plurality of images and transmit them over a digital connection (e.g., USB, wireless, Bluetooth, etc.) to processing unit 110. In some embodiments, processing unit 110 may receive more than one plurality of images via a plurality of data interfaces. For example, processing unit 110 may receive a plurality of images from each of image capture devices 122, 124, 126, each of which may have an associated data interface for communicating data to processing unit 110. The disclosed embodiments are not limited to any particular data interface configurations or protocols.

[0264] At step 1520, processing unit 110 may execute curve recognition module 1502 to detect a curve located ahead of vehicle 200 based on, for example, map and/or position data (e.g., data stored in map database 160). Such data may indicate the location of a curve that is present on a given road. The data may indicate the absolute position of a particular curve (e.g., via GPS coordinates) or the relative position of the curve (e.g., by describing the curve relative to vehicle 200, road sign 1302, traffic light 1304, and/or other descriptive landmarks). In some embodiments, processing unit 110 may execute curve recognition module 1502 to detect the curve by analyzing the plurality of images. The analysis may be conducted using techniques described in connection with FIGS. 5A-5D and 6, above.

[0265] At step 1530, processing unit 110 may execute velocity module 1406 to determine an initial target velocity for vehicle 200 based on, for example, data derived from execution of curve recognition module 1402. The initial target velocity may reflect a speed and a direction for vehicle 200 to safely enter an upcoming curve and may be determined using techniques described in connection with FIG. 14, above. For example, velocity module 1406 may determine the initial target velocity based on known or estimated characteristics associated with the upcoming curve, such as the curve radius 1308 and the degree of banking. Velocity module 1406 may calculate the initial target velocity in accordance with mathematical models and/or formulae and based on various constraints. In some embodiments, for example, velocity module 1406 may determine the initial target velocity based on the presence of traffic lights (such as traffic light 1304) before, during, or after a curve, weather conditions (e.g., light rain, heavy rain, windy, clear, etc.), road conditions (e.g., paved road, unpaved road, potholes, etc.), posted speed limits, the presence of vehicles or pedestrians nearby, etc. The initial target velocity may also be based on a lateral acceleration limit associated with vehicle 200. In some embodiments, the lateral acceleration limit may be in the range of 0.2 m/sec^2 and 3.0 m/sec^2 and may be adjusted depending on the curve characteristics, the road width, or lane width 1306. Additionally, the initial target velocity may be based on a focal range associated with one or more of cameras, such as image capture devices 122 and 124.

[0266] For example, velocity module 1406 may determine the initial target velocity based on the radius of curvature of the road ahead of vehicle 200. Velocity module 1406 may determine the radius of curvature at various distances from vehicle 200 and store the information in a vector $R(1{:}n)$. In one embodiment, velocity module 1406 may determine the radius of curvature at: (1) the current position of

IPR2025-01035
Tesla EX1002 Page 2169

vehicle 200, (2) a distance D_{end} from vehicle 200, where D_{end} represents the distance ahead of vehicle 200 at which knowledge of the road characteristics allows system 100 to control navigational responses in vehicle 200 such that the driver may feel comfortable, and (3) at incremental distances from vehicle 200, such as every 1 meter, etc. The value of distance D_{end} may depend on the current speed of vehicle 200, V_{ego}. For example, the greater the value of V_{ego} (e.g., the faster vehicle 200 is traveling), the greater the value of D_{end} (e.g., the longer the distance may be taken into account to provide system 100 with sufficient time to provide a navigational response, such as comfortably reducing the speed of vehicle 200 based on an approaching sharp turn or curve). In one embodiment, D_{end} may be calculated according to the following equation: $D_{end} = (V_{ego}^2 / 2) / (0.7 / 40 * V_{ego} + 0.5)$. Thus, the vector $D(1{:}n) = [1{:}1{:}n]$, where $n = \text{floor}(D_{end})$.

[0267] In some embodiments, velocity module 1406 may determine the initial target velocity based on a lateral acceleration constraint, a_{max}, e.g., the maximum allowed lateral acceleration. a_{max} may fall in the range of 1.5 to 3.5 meters / sec^2. Based on a_{max} and the radius of curvature vector R (discussed above), velocity module 1406 may limit the speed of vehicle 200 (e.g., at different points or distances from the current position of vehicle 200) to a speed v_{lim}, calculated as: $v_{lim}(1{:}n) = \text{sqrt}(a_{max} * R(1{:}n))$. In addition, a deceleration constraint that follows from the determination of v_{lim} may be calculated as: $dec_{lim} = \min\{((v_{lim}(1{:}n)^2 - V_{ego}^2) / 2), \max\{d_{min}, D(1{:}n) - 2 * V_{ego}\}\}$, where d_{min} is equal to 40 meters. The value of d_{min} may represent a point at which deceleration feels comfortable for the driver of vehicle 200.

[0268] In some embodiments, velocity module 1406 may determine the initial target velocity based on a curvature slew rate constraint, $slew_{max}$, which may be based on the curvature rate of change. $slew_{max}$ may fall in the range of 0.5 to 1.5 meters / sec^3. Velocity module 1406 may determine v_{lim} according the following equation: $v_{lim}(1{:}n) = (slew_{max} / \text{abs}\{\text{diff}\{1 / R(1{:}n)\}\})^{1/3}$. Further, velocity module 1406 may determine dec_{lim} according to the equation: $dec_{lim} = \min\{((v_{lim}(1{:}n)^2 - V_{ego}^2) / 2), \max\{d_{min}, D(1{:}n) - 2 * V_{ego}\}\}$, where d_{min} is equal to 40 meters.

[0269] In some embodiments, velocity module 1406 may determine a comfort constraint such that the driver of vehicle 200 is comfortable while vehicle 200 is undergoing various navigational responses, such as making a turn or navigating a curve. Velocity module 1406 may determine v_{lim} according to the following equation: $v_{lim}(1{:}n) = 4/500 * R(1{:}n) + 22.5$. Further, velocity module 1406 may determine dec_{lim} according to the equation: $dec_{lim} = \min\{((v_{lim}(1{:}n)^2 - V_{ego}^2) / 2), \max\{d_{min}, D(1{:}n) - 2 * V_{ego}\}\}$, where d_{min} is equal to 40 meters.

[0270] Velocity module 1406 may merge the three constraints determined above—the lateral acceleration constraint, the curvature slew rate constraint, and comfort constraint—by using the smallest value of dec_{lim} calculated in association with each constraint. After merging the constraints, velocity module 1406 may arrive at the initial target velocity by determining how much to adjust the speed of vehicle 200, denoted v_{com}, according to the following equation: $v_{com} = v_{com(prev)} + dec_{lim} * \Delta t$, where $v_{com(prev)}$ represents the prior speed of vehicle 200 (e.g., a previously determined speed, the speed of vehicle 200 prior to any adjustment by velocity module 1406, etc.), and Δt represents the time between the determination of v_{com} and $v_{com(prev)}$.

[0271] At step 1540, processing unit 110 may execute velocity module 1406 to adjust a velocity of vehicle 200 to the initial target velocity determined at step 1530. Based on the current velocity of vehicle 200 and the initial target velocity determined at step 1530, processing unit 110 may transmit electronic signals to throttling system 220, braking system 230, and/or steering system 240 of vehicle 200 to change the velocity of vehicle 200 to the initial target velocity. Further, one or more actuators may control throttling system 220, braking system 230, and/or steering system 240. For example, processing unit 110 may transmit electronic signals that cause system 100 to physically depress the brake by a predetermined amount or ease partially off the accelerator of vehicle 200. Further, processing unit 110 may transmit electronic signals that cause system 100 to steer vehicle 200 in a particular direction. In some embodiments, the magnitude of acceleration (or de-acceleration) may be based on the difference between the current velocity of vehicle 200 and the initial target velocity. Where the difference is large (e.g., the current velocity is 10 km/hr greater than the initial target velocity), for example, system 100 may change the current velocity by braking in a manner that maximizes deceleration and results in vehicle 200 achieving the initial target velocity in the shortest amount of time safely possible. Alternatively, system 100 may apply the brakes in a manner that minimizes deceleration and results in vehicle 200 achieving the initial target velocity gradually. More generally, system 100 may change the current velocity to the initial target velocity according to any particular braking profile (e.g., a braking profile calling for a high level of braking for the first two seconds, and a low level of braking for the subsequent three seconds). The disclosed embodiments are not limited to any particular braking profile or manner of braking.

[0272] At step 1550, processing unit 110 may execute characteristic observation module 1404 to determine one or more characteristics of a curve located ahead of vehicle 200 based on, for example, analysis of the plurality of images conducted using techniques described in connection with FIGS. 5A-5D, above. The characteristics may include, for example, estimated and/or actual values associated with curve radius 1308, a road width or lane width 1306, a degree of curvature, a rate of change in curvature, a degree of banking, and the like. The characteristics may also include, for example, information conveyed by one or more road signs (such as road sign 1302). Furthermore, the characteristics may include the length or arc length of the detected curve, which may be a function of the speed of vehicle 200 as it approaches the curve. Processing unit 110 may execute characteristic observation module 1404 to calculate values associated with these characteristics (e.g., curve radius 1308, the degree of curvature, the rate of change in curvature, the arc length of the curve, etc.) based on mathematical models and/or formulae. In some embodiments, processing unit 110 may execute characteristic observation module 1404 to construct a mathematical model expressing the curvature of the curve as a function of distance (e.g., distance traveled). Such a model may be subject to constraints such as a maximum lateral acceleration constraint (e.g., in the range of 1.5 to 3.0 m/sec^2) and/or a maximum lateral acceleration derivative constraint (e.g., in the range of 0.8 to 1.2 m/sec^2). These constraints may yield a maximum speed for vehicle 200 as a function of distance traveled.

[0273] At step 1560, processing unit 110 may execute velocity module 1406 to calculate an updated target velocity based on the characteristics determined at step 1550. The updated target velocity may reflect an updated speed and/or direction for vehicle 200 to safely perform any combination of: (i) entering an upcoming curve, (ii) navigating through a curve, or (iii) exiting a curve. The updated target velocity may be determined using techniques described in connection with FIG. 14 and step 1530, above. For example, velocity module 1406 may determine the updated target velocity based on characteristics associated with a curve and mathematical models and/or formulae.

[0274] At step 1570, processing unit 110 may execute velocity module 1406 to adjust the velocity of vehicle 200 to the updated target velocity determined at step 1560. This adjustment may be accomplished using techniques described in connection with step 1540, above. For example, based on the current velocity of vehicle 200 and the updated target velocity determined at step 1560, processing unit 110 may transmit electronic signals (e.g., via a CAN bus) to throttling system 220, braking system 230, and/or steering system 240 of vehicle 200 to change the velocity of vehicle 200 to the updated target velocity. At this point, the current velocity of vehicle 200 is not necessarily the same as the initial target velocity determined at step 1530. For example, processing unit 110 may have determined the updated target velocity at step 1560 while in the process of adjusting the velocity of vehicle 200 to the initial target velocity. This may be true in the case where the difference in the velocity of vehicle 200 and the initial target velocity is large (e.g., greater than 10 km/hr) and the associated acceleration is small.

[0275] In some embodiments, system 100 may make regular updates to the target velocity based on continued observations of characteristics of a curve (e.g., based on image data depicting portions of the curve that vehicle 200 is approaching). Additionally, after system 100 has navigated vehicle 200 through a curve, system 100 may cause vehicle 200 to accelerate to a new target velocity suitable for traveling a segment of the road that does not have curves, as determined by analyzing map data, positional data, and/or image data acquired by system 100.

[0276] Mimicking A Leading Vehicle

[0277] System 100 may provide driver assist functionality that causes vehicle 200 to mimic (or decline to mimic) a leading vehicle in different scenarios, such as when the leading vehicle switches lanes, accelerates, or makes a turn. For example, system 100 may be configured to detect the leading vehicle by analyzing a plurality of images and determine one or more actions taken by the leading vehicle. In some scenarios, such as when the leading vehicle is turning at an intersection, system 100 may be configured to cause vehicle 200 to decline to mimic the turn. In other scenarios, such as when the leading vehicle is turning at an intersection without changing lanes within the intersection, system 100 may be configured to cause vehicle 200 to mimic the turn. System 100 may also be configured to cause vehicle 200 to mimic one or more actions of the leading vehicle based on a navigation history of the leading vehicle.

[0278] FIGS. 16A and 16B are diagrammatic representations of a primary vehicle 200a mimicking one or more actions of a leading vehicle 200b on road 1600a, consistent with the disclosed embodiments. As illustrated in FIGS. 16A and 16B, primary vehicle 200a may be trailing leading vehicle

200b while traveling in the same lane of road 1600a. The lane may have a left edge 1620, a right edge 1630, and a midpoint 1610, with w_1 and w_2 indicating the left and right halves of the lane, respectively. Primary vehicle 200a and leading vehicle 200b may be positioned in the lane such that neither vehicle is centered on the midpoint 1610. As shown in FIG. 16A, for example, primary vehicle 200a may be centered to the right of midpoint 1610 such that the distance c_1 between primary vehicle 200a and left edge 1620 is greater than the distance c_2 between primary vehicle 200a and right edge 1630. In contrast, leading vehicle 200b may be centered to the left of midpoint 1610 such that the distance c_3 between leading vehicle 200b and left edge 1620 is less than the distance c_4 between leading vehicle 200b and right edge 1630. Different configurations of the positions of primary vehicle 200a and leading vehicle 200b are possible. For example, primary vehicle 200a and leading vehicle 200b may be positioned anywhere on road 1600a. Further, although FIG. 16A depicts leading vehicle 200b as having a camera system, the disclosed embodiments are not limited to a configuration in which leading vehicle 200b includes a camera system.

[0279] System 100 of primary vehicle 200a may cause primary vehicle 200a to mimic one or more actions of leading vehicle 200b. As shown in FIG. 16B, for example, primary vehicle 200a may mimic a lane shift performed by leading vehicle 200b. After mimicking the lane shift, distance c_1 may be equal to distance c_3, and distance c_2 may be equal to distance c_4. In some embodiments, primary vehicle 200a may mimic a lane shift performed by leading vehicle 200b in a way such that distances c_1 and c_3, and c_2 and c_4, are unequal. For example, in the case where primary vehicle 200a mimics a leftward lane shift of primary vehicle 200b and is positioned (after the lane shift) to the left of primary vehicle 200a, c_1 will be less than c_3 and c_2 will be greater than c_4. Alternatively, where primary vehicle 200a mimics a leftward lane shift of primary vehicle 200b and is positioned to the right of primary vehicle 200a, c_1 will be greater than c_3 and c_2 will be less than c_4.

[0280] FIGS. 16C and 16D are diagrammatic representations of a primary vehicle 200a mimicking one or more actions of a leading vehicle 200b on road 1600b, consistent with the disclosed embodiments. As illustrated in FIG. 16C, primary vehicle 200a may be traveling behind leading vehicle 200b, which may make a left turn at an intersection. System 100 of primary vehicle 200a may cause primary vehicle 200a to mimic the left turn of leading vehicle 200b, as shown in FIG. 16D. System 100 may cause primary vehicle 200a to mimic the left turn based on various factors, such as whether leading vehicle 200b changes lanes while turning within the intersection, the navigation history associated with leading vehicle 200b, the relative difference in speed between primary vehicle 200a and leading vehicle 200b, and the like. Additionally, primary vehicle 200a may mimic leading vehicle 200b under various conditions, such as based on whether leading vehicle 200b is traveling along the same route or the same portion of a route that primary vehicle 200a is traveling along. Further detail regarding scenarios in which system 100 may cause primary vehicle 200a to mimic one or more actions of leading vehicle 200b are described in connection with FIGS. 17-22, below.

[0281] In some embodiments, system 100 may be configured to determine whether to mimic a particular movement of a leading vehicle. For example, system 100 may determine that certain

movements of the leading vehicle do not need to be mimicked because the movements do not affect the course of the leading vehicle. For example, system 100 may determine that small changes in movements, such as moving within a particular lane, do not need to be mimicked. In other embodiments, system 100 may implement a smoothing operation to filter out small movements of a leading vehicle. The smoothing operation may cause the primary vehicle to implement more significant and/or important movements (e.g., changing lanes) of a leading vehicle while filtering out smaller movements not affecting the overall course of the leading vehicle.

[0282] FIG. 17 is an exemplary block diagram of a memory configured to store instructions for performing one or more operations consistent with the disclosed embodiments. As shown in FIG. 17, memory 140 may store a lane constraint module 1702, an action detection module 1704, and an action response module 1706. The disclosed embodiments are not limited to any particular configuration of memory 140. Further, processing unit 110 may execute the instructions stored in any of modules 1702-1706 included in memory 140.

[0283] In one embodiment, lane constraint module 1702 may store software instructions (such as computer vision software) which, when executed by processing unit 110, determine one or more constraints associated with a lane that primary vehicle 200a is traveling in. The lane constraints may include a midpoint 1610, a left edge 1620, and a right edge 1630 of the lane. The lane constraints may also include one or more lines or other symbols marked on the surface of road 1600a or 1600b. Processing unit 110 may execute lane constraint module 1702 to determine the constraints by, for example, analyzing one or more sets of images and/or using map and/or position data (e.g., data stored in map database 160). The image sets may be acquired by one or more of image capture devices 122, 124, and 126. Based on the analysis, system 100 (e.g., via processing unit 110) may cause primary vehicle 200a to travel within a lane defined by left edge 1620 and right edge 1630. In some embodiments, system 100 may cause primary vehicle 200a to move away from left edge 1620 or right edge 1630 if one of distance c_1 or c_2 is less than a predetermined threshold.

[0284] In one embodiment, action detection module 1704 may store software instructions (such as computer vision software) which, when executed by processing unit 110, detects one or more actions taken by leading vehicle 200b traveling in front of primary vehicle 200a. Leading vehicle 200b may be traveling in the same or different lane as primary vehicle 200a. Processing unit 110 may execute action detection module 1704 to detect one or more actions taken by leading vehicle 200b by, for example, analyzing one or more sets of images acquired by one or more of image capture devices 122, 124, and 126. Based on the analysis, processing unit 110 may determine, for example, that leading vehicle 200b has shifted lanes, made a turn, accelerated, decelerated, applied its brakes, and/or the like. As another example, leading vehicle 200b may perform a maneuver such that a first offset distance on a side of leading vehicle 200b adjacent to a first lane constraint is different from a second offset distance on a side of leading vehicle 200b adjacent to a second lane constraint. For example, processing unit 110 may perform the analysis based on the techniques described in connection with FIGS. 5A-5D, above.

[0285] In one embodiment, action response module 1706 may store software instructions (such as computer vision software) which, when executed by processing unit 110, determines one or more actions for primary vehicle 200a to take based on one or more actions taken by leading vehicle 200b detected by system 100 (e.g., via execution of action detection module 1704). For example, processing unit 110 may execute action response module 1706 to determine whether to mimic one or more actions of leading vehicle 200b. This determination may be based on the nature of leading vehicle 200b's actions (e.g., turn, lane shift, etc.), information associated with primary vehicle 200a (e.g., speed, distance c_1 and c_2 from the lane edges, etc.), road and environmental conditions (e.g., potholes, heavy rain or wind, etc.), and the like. In the case where processing unit 110 determines to mimic one or more actions of leading vehicle 200b, processing unit 110 may accomplish this by, for example, transmitting electronic signals (e.g., via a CAN bus) to throttling system 220, braking system 230, and/or steering system 240 of primary vehicle 200a to trigger a turn, lane shift, change in speed, and/or change in direction of primary vehicle 200a. Processing unit 110 may use the techniques described in connection with FIGS. 4-7, above, to cause primary vehicle 200a to mimic the one or more actions. To mimic the one or more actions, system 100 may provide control signals to one or more of throttling system 220, braking system 230, and steering system 240 to navigate vehicle 200 (e.g., by causing an acceleration, a turn, a lane shift, etc.). Further, one or more actuators may control throttling system 220, braking system 230, and/or steering system 240.

[0286] FIG. 18 is a flow chart showing an exemplary process for causing primary vehicle 200a to mimic one or more actions of leading vehicle 200b consistent with disclosed embodiments. At step 1810, processing unit 110 may receive a plurality of images via data interface 128 between processing unit 110 and image acquisition unit 120. For instance, a camera included in image acquisition unit 120 (such as image capture device 122) may capture a plurality of images and transmit them over a digital connection (e.g., USB, wireless, Bluetooth, etc.) to processing unit 110. In some embodiments, processing unit 110 may receive more than one plurality of images via a plurality of data interfaces. For example, processing unit 110 may receive a plurality of images from each of image capture devices 122, 124, 126, each of which may have an associated data interface for communicating data to processing unit 110. The disclosed embodiments are not limited to any particular data interface configurations or protocols.

[0287] At steps 1820 and 1830, processing unit 110 may execute lane constraint module 1702 to determine constraints for each side of primary vehicle 200a associated with a lane that primary vehicle 200a is traveling in. Processing unit 110 may determine the constraints by analyzing the images received at step 1810. Thus, at step 1820, processing unit 110 may determine a first lane constraint on a first side of primary vehicle 200a (e.g., the distance between the left side of primary vehicle 200a and left edge 1620 of the lane, c_1) and, at step 1830, a second lane constraint on a second side opposite the first side (e.g., the distance between the right side of primary vehicle 200a and right edge 1620 of the lane, c_2). In some embodiments, processing unit 110 may determine the constraints by using map and/or position data (e.g., data stored in map database 160) indicating the position of primary vehicle 200a relative to midpoint 1610, left edge 1620, and right edge 1630 of the lane. Processing unit 110 may determine the

constraints based on both an analysis of the images received at step 1810 and map and/or position data; doing so may increase the confidence level associated with the constraints.

[0288] At step 1840, processing unit 110 may execute lane constraint module 1702 to cause primary vehicle 200a to travel within the lane constraints determined at steps 1820 and 1830. For example, the left side of primary vehicle 200a may be positioned to the left of left edge 1620, or the right side of primary vehicle 200a may be positioned to the right of right edge 1630. In such a scenario, processing unit 110 may transmit electronic signals (e.g., via a CAN bus) to throttling system 220, braking system 230, and/or steering system 240 of primary vehicle 200a to cause primary vehicle 200a to adjust its position and travel within the lane constraints.

[0289] At step 1850, processing unit 110 may execute action detection module 1704 to locate a leading vehicle 200b within the images received at step 1810 by analyzing the images. Processing unit 110 may detect the presence of vehicles in the images using the techniques described in connection with FIGS. 5A and 5B, above. For each detected vehicle, processing unit 110 may construct a multi-frame model of the detected vehicle's position, velocity (e.g., speed and direction), and acceleration relative to primary vehicle 200a. Processing unit 110 may use the techniques described in connection with FIGS. 5A and 5B, above, to construct such a model. In addition, processing unit 110 may determine a lane of travel associated with each detected vehicle, based on, for example, lane or other road markings and lane constraints determined at steps 1820 and 1830. Processing unit 110 may determine leading vehicle 200b to be the detected vehicle that is closest to, and is traveling in the same lane as, primary vehicle 200a. At step 1860, processing unit 110 may execute action detection module 1704 to determine one or more actions taken by the leading vehicle 200b detected within the images at step 1850. For example, processing unit 110 may determine that leading vehicle 200b has shifted lanes, made a turn, accelerated, decelerated, and/or the like. In addition, processing unit 110 may analyze the images to determine characteristics associated with leading vehicle 200b, such as its speed and position (e.g., relative to primary vehicle 200a). These determinations may be based on the techniques described in connection with FIGS. 5A and 5B, above. In some embodiments, processing unit 110 may analyze the images to determine characteristics associated with an action performed by leading vehicle 200b. For example, where leading vehicle 200b makes a turn, processing unit 110 may determine position information for leading vehicle 200b right before it begins the turn, position information for leading vehicle 200b as it completes the turn, a turning radius, and a speed profile describing changes in speed (e.g., over time) for leading vehicle 200b as it makes the turn.

[0290] At step 1870, processing unit 110 may execute action response module 1706 to cause primary vehicle 200a to mimic the one or more actions of leading vehicle 200b determined at step 1850. For example, processing unit 110 may transmit electronic signals (e.g., via a CAN bus) to throttling system 220, braking system 230, and/or steering system 240 of primary vehicle 200a to trigger a turn, lane shift, change in speed, and/or change in direction of primary vehicle 200a. In addition, processing unit 110 may construct a set of path points to guide changes in position and speed for primary vehicle 200a. The path points may be based on lane marks (e.g., midpoint 1610, left edge 1620, right edge 1630,

etc.) represented by a polynomial (e.g., of the third-degree) and target coordinates associated with a target vehicle, such as leading vehicle 200b. Processing unit 110 may adjust the coefficients of the polynomial so that the path points pass through the target coordinates. Processing unit 110 may also offset the path points (e.g., relative to left edge 1620 and right edge 1630) based on a predetermined offset amount. As processing unit 110 adjusts the polynomial coefficients and offsets the path points, processing unit 110 may also calculate local curvature information for each of the resulting segments formed between the path points.

[0291] In some embodiments, processing unit 110 (e.g., via execution of action response module 1706) may cause primary vehicle 200a to mimic leading vehicle 200b within certain position, speed, and/or acceleration constraints associated with the two vehicles. For example, the constraints may require a predetermined minimum distance (e.g., a safety distance) between primary vehicle 200a and leading vehicle 200b or a predetermined maximum difference in speed and/or acceleration between the vehicles. Thus, if mimicking an action performed by leading vehicle 200b would violate one or more constraints (e.g., mimicking an acceleration would result in primary vehicle 200a being too close to leading vehicle 200b), processing unit 110 may cause primary vehicle 200a to decline to mimic the one or more actions of leading vehicle 200b. In addition, even while mimicking an action performed by leading vehicle 200b (e.g., a lane shift), processing unit 110 may cause primary vehicle 200a to follow leading vehicle 200b's speed profile and maintain a predetermined distance or a safety distance from leading vehicle 200b. Processing unit 110 may accomplish this by causing primary vehicle 200a to: (i) continuously close the distance gap from leading vehicle 200b when the gap is greater than the predetermined minimum distance, (ii) continuously close the gap between the speeds of primary vehicle 200a and leading vehicle 200b, and (iii) match the acceleration of leading vehicle 200b to the extent it is consistent with predetermined constraints. To control the extent to which of these actions should be performed, processing unit 110 may associate each action with weights in real-time based on the current and predicted distance to leading vehicle 200b. Thus, for example, as the distance to leading vehicle 200b decreases more weight may be put on decelerating rather than matching the acceleration of leading vehicle 200b.

[0292] As another example, in the case where primary vehicle 200a is approaching leading vehicle 200b at a speed greater than the speed of leading vehicle 200b, processing unit 110 may cause primary vehicle 200a to gradually slow down such that, when the distance between the two vehicles equals a predetermined safety distance such as a minimum following distance, the speed of the two vehicles is the same. In another example, where a leading vehicle 200b abruptly appears in front of primary vehicle 200a, causing the distance between the two vehicles to be less than the minimum following distance, processing unit 110 may cause primary vehicle 200a to gradually slow down to avoid approaching leading vehicle 200b any closer while at the same increasing the distance between the vehicles until it reaches the minimum following distance.

[0293] FIG. 19 is a flow chart showing an exemplary process 1900 for causing primary vehicle 200a to decline to mimic a turn of leading vehicle 200b, consistent with disclosed embodiments. At step

1910, processing unit 110 may receive a plurality of images via data interface 128 between processing unit 110 and image acquisition unit 120, as described in connection with step 1810 of FIG. 18, above. At step 1920, processing unit 110 may execute action detection module 1704 to locate a leading vehicle 200b within the images received at step 1910 by analyzing the images, as described in connection with step 1850 of FIG. 18, above. At step 1925, processing unit 110 may execute action detection module 1704 to determine whether leading vehicle 200b is turning at an intersection, using the techniques described in connection with step 1860 of FIG. 18, above. If leading vehicle 200b is determined to be turning at the intersection (step 1925, yes), processing unit 110 may cause primary vehicle 200a to decline to mimic the turn of leading vehicle 200b at step 1930. Otherwise (step 1925, no), process 1900 concludes.

[0294] FIG. 20 is a flow chart showing an exemplary process 2000 for causing primary vehicle 200a to mimic or decline a turn of leading vehicle 200b, consistent with disclosed embodiments. At step 2010, processing unit 110 may receive a plurality of images via data interface 128 between processing unit 110 and image acquisition unit 120, as described in connection with step 1810 of FIG. 18, above. At step 2020, processing unit 110 may execute action detection module 1704 to locate a leading vehicle 200b within the images received at step 2010 by analyzing the images, as described in connection with step 1850 of FIG. 18, above. At step 2025, processing unit 110 may execute action detection module 1704 to determine whether leading vehicle 200b is turning at an intersection, using the techniques described in connection with step 1860 of FIG. 18, above. If leading vehicle 200b is determined to be turning at the intersection (step 2025, yes), at step 2035, processing unit 110 may execute action detection module 1704 to determine whether leading vehicle 200b is changing lanes within the intersection, using the techniques described in connection with step 1860 of FIG. 18, above. Otherwise (step 2025, no), process 2000 concludes. If leading vehicle 200b is determined to be changing lanes within the intersection (step 2035, yes), processing unit 110 may cause primary vehicle 200a to decline to mimic the turn of leading vehicle 200b at step 2050. Otherwise (step 2035, no), processing unit 110 may cause primary vehicle 200a to mimic the turn of leading vehicle 200b at step 2040.

[0295] FIG. 21 is a flow chart showing another exemplary process 2100 for causing primary vehicle 200a to mimic one or more actions of a first leading vehicle, consistent with disclosed embodiments. At step 2110, processing unit 110 may receive a plurality of images via data interface 128 between processing unit 110 and image acquisition unit 120, as described in connection with step 1810 of FIG. 18, above. At steps 2120 and 2130, processing unit 110 may execute action detection module 1704 to locate a first and second leading vehicle within the images received at step 2110 by analyzing the images, as described in connection with step 1850 of FIG. 18, above. At step 2135, processing unit 110 may execute action detection module 1704 to determine whether the first leading vehicle path has a lower turning radius than the second leading vehicle path, using the techniques described in connection with step 1860 of FIG. 18, above. If the first leading vehicle path is determined to have a lower turning radius than the second leading vehicle path (step 2135, yes), processing unit 110 may cause primary vehicle 200a to mimic the turn of the first leading vehicle at step 2140. Otherwise (step 2135, no), process 2100 concludes.

[0296] FIG. 22 is a flow chart showing an exemplary process 2200 for causing primary vehicle 200a to mimic one or more actions of leading vehicle 200b based on a navigation history, consistent with disclosed embodiments. At step 2210, processing unit 110 may receive a plurality of images via data interface 128 between processing unit 110 and image acquisition unit 120, as described in connection with step 1810 of FIG. 18, above. At step 2220, processing unit 110 may execute action detection module 1704 to locate a leading vehicle 200b within the images received at step 2210 by analyzing the images, as described in connection with step 1850 of FIG. 18, above.

[0297] At step 2230, processing unit 110 may determine position information for leading vehicle 200b by analyzing the images received at step 2210. Position information for leading vehicle 200b may indicate the position of leading vehicle 200b relative to primary vehicle 200a. Processing unit 110 may analyze the images to derive position information for leading vehicle 200b and one or more actions taken by leading vehicle 200b by using the techniques described in connection with FIGS. 5A-5D, above.

[0298] At step 2240, processing unit 110 may compare the position information for leading vehicle 200b determined at step 2230 to predetermined map data (e.g., data stored in map database 160). For example, by comparing the position information to predetermined map data, processing unit 110 may derive position coordinates for leading vehicle 200b. In addition, processing unit 110 may use the predetermined map data as an indicator of a confidence level associated with the position information determined at step 2230.

[0299] At step 2250, processing unit 110 may create a navigation history associated with leading vehicle 200b by, for example, tracking the actions taken by leading vehicle 200b. Processing unit 110 may associate the actions taken by leading vehicle 200b (e.g., determined from analysis of the images at step 2230) with predetermined map data from step 2240. Thus, the navigation history may indicate that leading vehicle 200b performed certain actions (e.g., a turn, a lane shift, etc.) at certain position coordinates.

[0300] At step 2260, processing unit 110 may execute action response module 1706 to determine whether to cause primary vehicle 200a to mimic one or more actions of leading vehicle 200b based on the navigation history created at step 2250 and using the techniques described in connection with step 1870 of FIG. 18, above. For example, processing unit 110 (e.g., via action response module 1706) may cause primary vehicle 200a to mimic a turn of leading vehicle 200b, even where no turn is detected from analysis of the images (e.g., at step 2230), when the navigation history indicates that leading vehicle 200b has successfully navigated at least one prior turn. More generally, processing unit 110 may cause primary vehicle 200a to mimic an action taken by leading vehicle 200b in cases where the navigation history indicates the leading vehicle 200b had successfully performed such an action.

[0301] Navigating a Vehicle to Pass Another Vehicle:

[0302] System 100 may provide driver assist functionality that monitors the vicinity around vehicle 200 and aborts lane changes in the event that the lane change is deemed to be at risk of causing a collision, such as with another vehicle (e.g., a target vehicle). For example, system 100 may enable vehicle 200 to complete a pass of a target vehicle if the target vehicle is determined to be in a different

lane than vehicle 200. If, before completion of a pass, system 100 determines that the target vehicle is entering the lane in which vehicle 200 is traveling, system 100 may cause vehicle 200 to abort the pass. For example, aborting the pass may include causing vehicle 200 to brake or causing vehicle 200 to stop accelerating.

[0303] As illustrated in FIG. 23, vehicle 200 may travel on roadway 2300. Vehicle 200 may be equipped with system 100 and may implement any of the disclosed embodiments for identifying lane constraints and operating vehicle 200 within the lane constraints. System 100 may also facilitate lane changes made by vehicle 200. For example, system 100 may determine whether circumstances allow vehicle 200 to safely change lanes and, if the circumstances change during the lane change, cause vehicle 200 to abort lane change.

[0304] As shown in FIG. 23 and as previously discussed with respect to FIG. 8, vehicle 200 may include first vehicle side 802, which may be first distance 805 from a first lane constraint 2302. Similarly, vehicle 200 may include second vehicle side 812 opposite from first vehicle side 802, and second vehicle side 812 may be second distance 815 from a second lane constraint 2304. In this manner, first lane constraint 810 and second lane constraint 2304 may define a lane 2330 within which vehicle 200 may travel.

[0305] System 100 may determine first lane constraint 2302 and second lane constraint 2304 based on a plurality of images acquired by one or more of image capture devices 122--126. According to some embodiments, first lane constraint 2302 and/or second lane constraint 2304 may be identified by visible lane boundaries, including lines marked on a road surface. Additionally or alternatively, first lane constraint 2302 and/or second lane constraint 2304 may include an edge of a road surface. According to some embodiments, system 100 may determine first lane constraint 2302 and/or second lane constraint 2304 by identifying a midpoint of a road surface width 2320 (or any other suitable road feature that vehicle 200 may use as a navigation reference). System 100 may identify lane constraints in this manner when, for example, lines designating road lanes are not painted or otherwise labeled.

[0306] When passing a target vehicle 2310, the lane change of vehicle 200 may be complicated by a change in the trajectory of target vehicle 2330. Thus, system 100 may identify target vehicle 2310 based on an analysis of a plurality of images acquired by one or more of image capture devices 122-126. System 100 may also identify second lane 2340 in which target vehicle 2310 is traveling. Further, system 100 may determine whether second lane 2340 is different than lane 2330 in which vehicle 200 is traveling. If second lane 2340 is different than lane 2330, system 100 may be configured to enable vehicle 200 to pass target vehicle 2310.

[0307] System 100 may also monitor target vehicle 2310 based on the plurality of images. For example, system 100 may monitor a position of target vehicle 2310, such as monitoring its position relative to vehicle 200, relative to first lane constraint 2302 and/or second lane constraint 2304, an absolute position, or relative to another reference point. Additionally or alternatively, monitoring a position of target vehicle 2310 may include estimating a speed of target vehicle 2310.

[0308] If system 100 determines that target vehicle 2310 is entering lane 2330 in which vehicle 200 is traveling, system 100 may cause vehicle 200 to abort the pass of target vehicle 2310. For example, system 100 may cause vehicle 200 to stop accelerating or brake. Additionally or alternatively, system 100 may issue an audible announcement, such as to notify driver of vehicle 200 that the lane change is being aborted.

[0309] FIG. 24A is an exemplary block diagram of memory 140, which may store instructions for performing one or more operations consistent with disclosed embodiments. As illustrated in FIG. 24A, memory 140 may store one or more modules for identification of the target vehicle and responses described herein. For example, memory 140 may store a lane constraint module 2400, a target vehicle acquisition module 2410, and an action module 2415.

[0310] In one embodiment, lane constraint module 2400 may store instructions which, when executed by processing unit 110, may detect and define first lane constraint 2302 and second lane constraint 2304. For example, processing unit 110 may execute lane offset module 2400 to process the plurality of images received from at least one image capture device 122–124 and detect first lane constraint 2302 and second lane constraint 2304. As discussed above, this may include identifying painted lane lines or markers and/or measuring a midpoint of a road surface. Processing unit 110 may perform the analysis based on the techniques described in connection with FIGS. 5A-5D, above.

[0311] In some embodiments, target acquisition module 2410 may store instructions which, when executed by processing unit 110, may detect the presence of target vehicle 2310 and monitor the position of target vehicle 2310. For example, target acquisition module 2410 may process the plurality of images to detect and monitor target vehicle 2310. Additionally or alternatively, when executing target acquisition module 2410, processing unit 110 may receive information from another module or other system indicative of the presence and/or location of target vehicle 2310. Processing unit 110 may perform the analysis based on the techniques described in connection with FIGS. 5A-5D, above.

[0312] Processing unit 110 may be configured to determine the presence of one or more objects such as target vehicle 2310 in the vicinity of vehicle 200. For example target vehicle 2310 may comprise another vehicle, such as a car, truck or motorcycle traveling near vehicle 200. Processing unit 110 may determine, for each target vehicle 2310, an offset profile. The offset profile may include a determination of whether in its current and predicted position, target vehicle 2310 will be within a predefined range of vehicle 200. If processing unit 110 determines that target vehicle 2310 is or will be within a predefined range of vehicle 200, processing unit may determine whether there is enough space within first lane constraint 810 and second lane constraint 820, for vehicle 200 to bypass target vehicle 2310. If there is not enough space, processing unit 110 may execute a lane change. If there is enough space, processing unit 110 may determine whether there is enough time to bypass target vehicle 2310 before the distance between vehicle 200 and target vehicle 2310 closes. If there is enough time, processing unit 110 may initiate and or activate the offset maneuver to bypass target vehicle 2310. The offset maneuver may be executed by processing unit 110 so that the movement of vehicle 200 is smooth and comfortable for the driver. For example, the offset slew rate may be approximately 0.15 to 0.75 m/sec. The offset maneuver

may be executed so that the maximum amplitude of the offset maneuver will occur when the gap between vehicle 200 and object 825 closes. If there is not enough time, processing unit 110 may initiate braking and then initiate an offset maneuver.

[0313] Further, processing unit 110 may execute action module 2415 to abort the plan of vehicle 200 to pass target vehicle 2310. If target vehicle 2310 is not in lane 2330 of vehicle 200, instructions included in action module 1230 may enable vehicle 200 to pass target vehicle 2330. However, if execution of target vehicle acquisition module 2410 indicates that target vehicle 2310 is changing lanes into lane 2330 of vehicle 200, processing unit 110 may execute instructions included in action module 2415 to abort the lane change of vehicle 200. For example, processing unit 110 may transmit electronic signals to throttling system 220, braking system 230, and/or steering system 240 of vehicle 200 to abort the lane change. Additionally or alternatively, processing unit may cause an audible notification to sound.

[0314] FIG. 24B illustrates a flowchart of an exemplary process 2420 for navigating a vehicle among encroaching vehicles, consistent with disclosed embodiments. Process 2420 may identify lane constraints that define a lane of travel for a vehicle (e.g., vehicle 200) to travel, identify and monitor a target vehicle (e.g., vehicle 2310), and enable the vehicle to pass the target vehicle or abort the pass if it is determined that the target vehicle is entering a lane in which the vehicle is traveling.

[0315] At step 2430, at least one of image capture device 122, 124, and/or 126 may acquire a plurality of images of an area in the vicinity of vehicle 200. For example, a camera included in image acquisition unit 120 (such as image capture device 122) may capture a plurality of images and transmit them over a digital connection (e.g., USB, wireless, Bluetooth, etc.) to processing unit 110. In some embodiments, processing unit 110 may receive more than one plurality of images via a plurality of data interfaces. For example, processing unit 110 may receive a plurality of images from each of image capture devices 122, 124, 126, each of which may have an associated data interface for communicating data to processing unit 110. The disclosed embodiments are not limited to any particular data interface configurations or protocols.

[0316] Next, at step 2440, processing unit 110 may determine a first lane constraint on first vehicle side 802 and a second lane constraint on second vehicle side 812 using the plurality of images received via data interface 128. For example, as part of implementing step 2440, processing unit 110 may execute instructions of lane constraint module 910. Further, as part of determining the first and second lane constraints, processing unit 110 may use one or more of the processes discussed above in connection with FIGS. 5A-5D.

[0317] At step 2450, processing unit 110 may acquire target vehicle 2310. To acquire target vehicle 2310, processing unit 110 may execute target vehicle acquisition module 2410. For example, processing unit 110 may execute instructions to analyze acquired images to identify second lane 2340 in which target vehicle 2310 is traveling and determine whether target vehicle 2310 is traveling in lane 2330 in which vehicle 200 is traveling. This determination may be based on the techniques described in connection with FIGS. 5A-5D, above.

[0318] At step 2455, processing unit 110 may determine whether second lane 2340 in which target vehicle 2310 is traveling is different than lane 2330 in which vehicle 200 is traveling.

[0319] At step 2460, processing unit 110 may enable vehicle 200 to pass target vehicle 2310 if second lane 2340 is different than lane 2330 in which vehicle 200 is traveling. To enable vehicle 200 to pass target vehicle 2310, processing unit may execute action module 2415.

[0320] Next, at step 2465, processing unit 110 may execute target acquisition module 2410 to monitor target vehicle 2310. This may include estimating a velocity of target vehicle 2310 and determining the location of target vehicle 2310, such as with respect to vehicle 200.

[0321] Step 2470 may include determining whether target vehicle 2310 has entered lane 2330. If processing unit 110 determines that target vehicle 2310 has not entered lane 2330, at step 2480, processing unit 110 may allow vehicle 200 to complete the pass.

[0322] At step 2490, if processing unit 110 determines that target vehicle 2310 has entered lane 2330 (or is entering lane 2330 or is otherwise on a trajectory to bring vehicle 2310 into lane 2330), processing unit 110 may execute action module 2415 to abort the pass. This may include, for example, issuing an audible notification to driver of vehicle 200 via speakers 360. Additionally or alternatively, step 2490 may include executing instructions included in action module 2415 to cause processing unit 110 to transmit electronic signals to throttling system 220, braking system 230, and/or steering system 240 of vehicle 200 to abort lane change.

[0323] Navigating a Vehicle to Avoid Encroaching Traffic

[0324] System 100 may provide driver assist functionality that monitors the vicinity around vehicle 200 and responds to the presence of another vehicle encroaching upon vehicle 200. Monitoring the vicinity around vehicle 200 may include monitoring a collision threshold. For example a collision threshold may include a time to collision or a minimum predetermined distance between vehicle 200 and other traffic. System 100 may further cause vehicle 200 to take evasive action to avoid encroaching traffic. For example, evasive action may include braking, changing lanes, or otherwise altering the course of vehicle 200.

[0325] As illustrated in FIG. 25, vehicle 200 may travel on roadway 2500. Vehicle 200 may include system 100 to detect and respond to encroaching traffic. For example, vehicle 200 may determine that another vehicle is entering into the lane in which vehicle 200 is traveling or otherwise determine that another vehicle is crossing a collision threshold. Vehicle 200 may react to an encroaching vehicle, such as by altering course, braking, or accelerating.

[0326] As discussed with respect to FIG. 8 and as shown in FIG. 25, vehicle 200 may include first vehicle side 802, which may be first distance 805 from a first lane constraint 2502. Similarly, vehicle 200 may include second vehicle side 812 opposite from first vehicle side 802, and second vehicle side 812 may be second distance 815 from a second lane constraint 2504. In this manner, first lane constraint 2502 and second lane constraint 2504 may define a lane 2505 within which vehicle 200 may travel.

[0327] System 100 may determine first lane constraint 2502 and second lane constraint 2504 based on a plurality of images acquired by one or more of image capture devices 122–126. According to

some embodiments, first lane constraint 2502 and/or second lane constraint 2504 may be identified by visible lane boundaries, such a line marked on a road surface. Additionally or alternatively, first lane constraint 2502 and/or second lane constraint 2504 may include an edge of a road surface. According to some embodiments, system 100 may determine first lane constraint 2502 and/or second lane constraint 2502 by identifying a midpoint 2520 of a road surface width (or any other suitable road feature vehicle 200 may use as a navigation reference). System 100 may identify lane constraints in this manner when, for example, lines designating road lanes are not painted or otherwise labeled.

[0328] Detection of first lane constraint 2502 and/or second lane constraint 2504 may include processing unit 110 determining their 3D models in a camera coordinate system. For example, the 3D models of first lane constraint 2502 and/or second lane constraint 2504 may be described by a third-degree polynomial. In addition to 3D modeling of first lane constraint 2502 and/or second lane constraint 2504, processing unit 110 may estimate motion parameters, such as the speed, yaw and pitch rates, and acceleration of vehicle 200. Optionally, processing unit may detect static and moving vehicles and their position, heading, speed, and acceleration, all relative to vehicle 200. Processing unit 110 may determine a road elevation model to transform the information acquired from the plurality of images into 3D space.

[0329] The driver of vehicle 200 cannot assume that other traffic traveling in adjacent or near-adjacent lanes will only change lanes if it is safe for that traffic to shift into lane 2505 in which vehicle 200 is driving. Thus, it may be desirable to consider and monitor traffic traveling in nearby lanes to detect lateral encroachment into lane 2505 of vehicle 200, so that vehicle 200 may react to lateral encroachment to avoid a collision. System 100 may identify an encroaching vehicle 2510 based on the plurality of images and determine that encroaching vehicle 2510 is approaching vehicle 200. System 100 may then cause an action to account for the encroaching vehicle. For example, system 100 may cause vehicle 200 to maintain a current velocity and travel within first lane constraint 2502 and second lane constraint 2504 such that a first distance 2530, which is on first vehicle side 802 on which encroaching vehicle 2510 is approaching, is greater than a second distance 2540.

[0330] Processing unit 110 may be configured to determine the presence of one or more encroaching vehicles 2510 in the vicinity of vehicle 200. Processing unit 110 may determine, for each encroaching vehicle 2510 an offset profile. The offset profile may include a determination of whether in its current and predicted position, encroaching vehicle 2510 will be within a predefined range of vehicle 200. If processing unit 110 determines that encroaching vehicle 2510 is or will be within a predefined range of vehicle 200, processing unit may determine whether there is enough space within first lane constraint 2502 and second lane constraint 2504, for vehicle 200 to bypass encroaching vehicle 2510. If there is not enough space, processing unit 110 may execute a lane change. If there is enough space, processing unit 110 may determine whether there is enough time to bypass encroaching vehicle 2510 before the distance between vehicle 200 and encroaching vehicle 2510 closes.

[0331] For example, if there is enough time, processing unit 110 may initiate and or activate the offset maneuver to bypass encroaching vehicle 2510. The offset maneuver may be executed by processing unit 110 so that the movement of vehicle 200 is smooth and comfortable for the driver. For example, the

offset slew rate may be approximately 0.15 to 0.75 m/sec. The offset maneuver may be executed so that the maximum amplitude of the offset maneuver will occur when the gap between vehicle 200 and encroaching vehicle 2510 closes. If there is not enough time, processing unit 110 may initiate braking (e.g., via transmitting electronic signals to braking system 230) and then initiate offset maneuver (e.g., by transmitting electronic signals to throttling system 220 and/or steering system 240).

[0332] System 100 may determine, based on a plurality of images acquired by one or more of image capture devices 122-126, that encroaching vehicle 2510 has crossed at least one collision threshold. For example, the at least one collision threshold may include a minimum predetermined distance 2550 between vehicle 200 and encroaching vehicle 2510. For example, encroaching vehicle 2510, as illustrated in FIG. 25, is shown exceeding minimum predetermined distance 2550. Additionally or alternatively, the at least one collision threshold may include a time to collision of vehicle 200 and encroaching vehicle 2510. The time-to-collision threshold may be determined based on the distance between vehicle 200 and encroaching vehicle 2510, the velocity of vehicle 200 and/or encroaching vehicle 2510, the lateral velocity of vehicle 200 and/or encroaching vehicle 2510, and/or the acceleration of vehicle 200 and/or encroaching vehicle 2510. A collision threshold based on a time to collision may be set to allow enough time for system 100 to effectively conduct evasive action to avoid collision.

[0333] If system 100 determines that at least one collision threshold has been crossed, system 100 may cause vehicle 200 to take evasive action. For example, this may include causing other subsystems of vehicle 200 to operate. Thus, system 100 may operate to cause vehicle 200 to increase speed by communicating with throttling system 220, braking system 230, and/or steering system 240 to change the speed and/or direction of vehicle 200.

[0334] The evasive action may include causing vehicle 200 to change lanes. This may be a desirable response if, for example, vehicle 200 is traveling on a multilane highway and system 100 determines that changing lanes to move away from encroaching vehicle 2510 will avoid a collision. Evasive action may include vehicle 200 altering its course. Additionally or alternatively, evasive action may include altering course of vehicle 200. For example, to take evasive action, processing unit 110 may transmit electronic signals to throttling system 220, braking system 230, and/or steering system 240.

[0335] System 100 may also be configured to cause vehicle 200 to take an action after the evasive action has been completed. For example, system 100 may cause vehicle 200 to return to midpoint 2520 of lane 2505 in which vehicle 200 is traveling. Additionally or alternatively, system 100 may cause vehicle 200 to resume a preset speed after braking in response to encroaching vehicle 2510.

[0336] FIG. 26 is an exemplary block diagram of memory 140, which may store instructions for detecting and responding to traffic laterally encroaching on a vehicle consistent with disclosed embodiments. As illustrated in FIG. 26, memory 140 may store a lane constraint module 2610, an encroaching vehicle acquisition module 2620, and an action module 2630.

[0337] In one embodiment, lane constraint module 2610 may store instructions which, when executed by processing unit 110, may detect and define first lane constraint 2502 and second lane constraint 2504. For example, processing unit 110 may execute lane offset constraint module 2610 to

process the plurality of images received from at least one image capture device 122–126 and detect first lane constraint 2502 and second lane constraint 2504. As discussed above, this may include identifying painted lane lines and/or measuring a midpoint of a road surface. Processing unit 110 may perform the analysis based on the techniques described in connection with FIGS. 5A-5D, above.

[0338] In one embodiment, encroaching vehicle acquisition module 2620 may store instructions which, when executed by processing unit 110, may detect the presence of encroaching vehicle 2510 and monitor encroaching vehicle 2510. For example, encroaching vehicle acquisition module 2620 may include instructions for determining a relative location of encroaching vehicle 2510 to vehicle 200. In some embodiments, this may include monitoring the velocity of encroaching vehicle 200. According to some embodiments, encroaching vehicle acquisition module 2620 may determine whether encroaching vehicle 2510 has exceeded a collision threshold. A collision threshold may be, for example, a minimum predetermined distance between vehicle 200 and encroaching vehicle 2510. If encroaching vehicle 2510 comes closer to vehicle 200 than the minimum predetermined distance, processing unit 110 may determine that encroaching vehicle 2510 is indeed encroaching and execute instructions to avoid collision with encroaching vehicle 2510.

[0339] Additionally or alternatively, a collision threshold may include a time to collision. The time-to-collision threshold may be determined based on the distance between vehicle 200 and encroaching vehicle 2510, the velocity of vehicle 200 and/or encroaching vehicle 2510, the lateral velocity of vehicle 200 and/or encroaching vehicle 2510, and/or the acceleration of vehicle 200 and/or encroaching vehicle 2510. A collision threshold based on a time to collision may be set to allow enough time for processing unit 110 and system 100 to effectively conduct evasive action to avoid collision.

[0340] Further, processing unit 110 may execute action module 2630 to respond to the detection of encroaching vehicle 2510 and/or the crossing of a collision threshold. For example, action module 2630 may include instructions to cause vehicle 200 to maintain a current velocity and to travel within first lane constraint 2502 and second lane constraint 2504 such that first distance 2530 is greater than second distance 2540. The first distance 2530 may be on the same side of vehicle 200 as encroaching vehicle 2510, so that vehicle 200 is farther away from encroaching vehicle 2510 while still within first lane constraint 2502 and second lane constraint 2504. If processing unit 110 determines that a collision threshold has been crossed, processing unit 110 may execute action module 2630 to cause vehicle 200 to take evasive action, such as altering course, braking, and/or changing lanes. Action module 2630 may also include instructions that cause vehicle 200 to resume course after completing evasive action. For example, processing unit 110 may cause vehicle 200 to resume a preset speed after braking or return to the center of lane 2505.

[0341] FIG. 27 illustrates a flowchart of an exemplary process 2720 detecting and responding to traffic laterally encroaching on a vehicle, consistent with disclosed embodiments. Process 2720 may identify lane constraints that define a lane of travel for vehicle travel, determine whether an encroaching vehicle 2510 is approaching, and cause vehicle 200 to maintain current velocity and to travel within first

lane constraint 2501 and second lane constraint 2504 such that first distance 2530, on the side of vehicle 200 that encroaching vehicle 2510 is approaching, is greater than second distance 2540.

[0342] At step 2730, at least one image capture device 122, 124, and/or 126 may acquire a plurality of images of an area in the vicinity of vehicle 200. For example, a camera included in image acquisition unit 120 (such as image capture device 122) may capture a plurality of images and transmit them over a digital connection (e.g., USB, wireless, Bluetooth, etc.) to processing unit 110. In some embodiments, processing unit 110 may receive more than one plurality of images via a plurality of data interfaces. For example, processing unit 110 may receive a plurality of images from each of image capture devices 122, 124, 126, each of which may have an associated data interface for communicating data to processing unit 110. The disclosed embodiments are not limited to any particular data interface configurations or protocols.

[0343] Next, at step 2740, processing unit 110 may determine a first lane constraint on first vehicle side 802 and a second lane constraint on second vehicle side 812 using the plurality of images received via data interface 128. For example, as part of implementing step 2740, processing unit 110 may execute instructions of lane constraint module 2610. Further, as part of determining the first and second lane constraints, processing unit 110 may use one or more of the processes discussed above in connection with FIGS. 5A-5D.

[0344] At step 2750, processing unit 110 may determine whether encroaching vehicle 2510 is approaching. To make this determination, processing unit 110 may execute encroaching vehicle acquisition module 2620. Encroaching vehicle acquisition module 2620 may include instructions to process images to detect other traffic. This may include identifying vehicles within a certain range of vehicle 200, such as those vehicles that are adjacent to vehicle 200. These adjacent vehicles may be encroaching vehicles 2510.

[0345] Once encroaching vehicle 2510 is identified, processing unit may determine more information regarding vehicle 2510. For example, at step 2555, processing unit 110 may determine whether target vehicle 2330 has exceeded a collision threshold. A collision threshold may be, for example, a minimum predetermined distance between vehicle 200 and encroaching vehicle 2510. If encroaching vehicle 2510 comes closer to vehicle 200 than the minimum predetermined distance, processing unit 110 may determine that encroaching vehicle 2510 is indeed encroaching and execute instructions to avoid collision with encroaching vehicle 2510.

[0346] Additionally or alternatively, a collision threshold may be a time to collision. The time-to-collision threshold may be determined based on the distance between vehicle 200 and encroaching vehicle 2510, the velocity of vehicle 200 and/or encroaching vehicle 2510, the lateral velocity of vehicle 200 and/or encroaching vehicle 2510, and/or the acceleration of vehicle 200 and/or encroaching vehicle 2510. A collision threshold based on a time to collision may be set to allow enough time for processing unit 110 and system 100 to effectively conduct evasive action to avoid collision.

[0347] At step 2760, processing unit 110 may cause vehicle 200 to maintain current velocity and to travel within first lane constraint 2502 and second lane constraint 2504. To cause vehicle 200 to

operate in this manner, processing unit 110 may execute action module 2630. Additionally or alternatively, step 2760 may include executing instructions on action module 1230 to cause processing unit 110 to transmit electronic signals to the accelerator 2610, brakes 2620, and/or steering system of vehicle 200 to cause vehicle 200 to maintain current velocity and to travel within first and second lane constraints 810 and 820.

[0348] If, at step 2755, processing unit 110 determined that a collision threshold has been exceeded, the processing unit 110 may take evasive action. The evasive action may include causing vehicle 200 to change lanes. This may be a desirable response if, for example, vehicle 200 is traveling on a multilane highway and system 100 determines that changing lanes to move away from encroaching vehicle 2510 will avoid a collision. Evasive action may include vehicle 200 altering its course. Additionally or alternatively, evasive action may include altering course of vehicle 200. For example, processing unit 110 may undertake evasive action by transmitting electronic signals to throttling system 220, braking system 230, and/or steering system 240 of vehicle 200. After the evasive action is completed, at step 2780, processing unit 110 may control vehicle 200 to resume its prior navigation (e.g., to resume navigation to a desired location).

[0349] Multi-Threshold Reaction Zone for Vehicle Navigation

[0350] System 100 may provide driver assist functionality that causes a response in vehicle 200, such as braking, accelerating, switching lanes, turning, and/or other navigational responses. For example, if system 100 detects the presence of another vehicle ahead of vehicle 200 that is traveling at a rate of speed slower than vehicle 200, system 100 may cause vehicle 200 to reduce its speed by braking. System 100 may apply a braking profile that accounts for the immediacy of the risk (e.g., the risk of collision) to provide the driver with a natural driving sensation.

[0351] System 100 may cause various different responses depending on the situation and a determined risk of collision with another vehicle, for example. System 100 may take no action in response to changes in speed or direction of a target vehicle ahead if the target vehicle is sufficiently far ahead and the determined risk of collision is low. Where the target vehicle may be closer or when the risk of collision rises above a predetermined level, system 100 may cause a response, such as braking, etc. When the risk of collision is even higher (e.g., where system 100 determines that a collision would be imminent without evasive action), system 100 may cause vehicle 100 to take an evasive action, such as maximum or near maximum braking, change of direction, etc.

[0352] FIGS. 28A and 28B are diagrammatic representations of a primary vehicle 200a on a road 2800, consistent with disclosed embodiments. In some instances, road 2800 may be divided into two lanes, lane 2810 and lane 2820. A target object, such as target vehicle 200b, may be traveling ahead of primary vehicle 200a in the same lane (e.g., lane 2820 as shown in FIGS. 28A and 28B) or in a different lane. As shown in the example depicted in FIG. 28A, primary vehicle 200a and target vehicle 200b may be separated by a distance d_1. At a given time after the scene depicted in FIG. 28A, primary vehicle 200a and target vehicle 200b may be separated by a distance d_2 as shown in FIG. 28B, where d_2 is less than d_1.

For example, primary vehicle 200a may be traveling at a rate of speed greater than target vehicle 200b, causing the distance between the vehicles to decrease from d_1 to d_2.

[0353] As another example, primary vehicle 200a and target vehicle 200b may be traveling at the same rate of speed until target vehicle 200b reduces its speed by braking, or primary vehicle 200a increases its speed by accelerating, causing the distance between the vehicles to decrease from d_1 to d_2. As another example, target vehicle 200b may encroach from a side of primary vehicle 200a. In some circumstances, if target vehicle 200b is ahead or a sufficient distance away from primary vehicle 200a (e.g., five meters or more, 10 meters or more, etc.) and moves toward primary vehicle 200a, system 100 may not take any action. However, if target vehicle 200b continues to move closer to primary vehicle 200a, then system 100 may cause primary vehicle 200a to brake, change speed, and/or change lanes. For example, if target vehicle 200b is within a predetermined threshold (e.g., within five meters), primary vehicle 200a may then take action. Different scenarios involving the relative speeds and positions of primary vehicle 200a and target vehicle 200b are possible, and the disclosed embodiments are not limited to any particular scenario.

[0354] In some embodiments, the multi-threshold reaction zone may provide a natural feeling driving experience to the user. For example, as discussed above, if the risk of collision is low, then system 100 may disregard movements by target vehicle 200b. As a result, primary vehicle 200a may not respond to movements or actions of target vehicle 200b when there is not a risk of a collision (e.g., primary vehicle 200a would not need to mimic every motion of target vehicle 200b when it's 100 meters ahead). However, if target vehicle 200b is close to primary vehicle 200a and/or if system 100 determines that the risk of collision is high, then a responsive maneuver may be taken such that the user feels safer by increasing space between primary vehicle 200a and target vehicle 200b. If system 100 determines that a crash may be imminent, then system 100 may take a more dramatic action without causing the user to be surprised, because the action may be necessary to avoid a collision.

[0355] Accordingly, in some embodiments, system 100 may associate the different reaction zones with different degrees of responsive actions. For example, in some embodiments, system 100 may take no action when target vehicle 200b is within a first threshold (e.g., when target vehicle 200b is far away from primary vehicle 200a), system 100 may take a medium action with target vehicle 200b is within a second threshold (e.g., when target vehicle 200b is becoming closer to primary vehicle 200a), and system 100 may take a more dramatic action when target vehicle 200 is within a third threshold (e.g., when target vehicle 200b is sufficiently close to primary vehicle 200a that there is a risk of a collision). In a first reaction zone associated with the first threshold, system 100 may take no action when the estimated distance-to-target associated with target vehicle 200b is greater than twice a predetermined safety distance. In some embodiments, the first reaction zone may apply where the estimated distance-to-target associated with target vehicle 200b falls in the range of 1.5 to 2.5 times the predetermined safety distance.

[0356] The estimated distance-to-target may be the current distance between primary vehicle 200a and target vehicle 200b plus the expected change of this distance over a prediction time (e.g., in the range of 0.1 to 1.0 seconds, depending on factors associated with system 100 such as velocity tracking

control loops, actuators, and vehicle dynamics). The expected change of distance may be calculated as: $(v_{target} - v_{primary}) * t_{prediction} + ((a_{target} - a_{primary}) * t_{prediction}^{1/2})$, where v_{target} and $v_{primary}$ correspond to the speed of target vehicle 200b and primary vehicle 200a, respectively, a_{target} and $a_{primary}$ correspond to the acceleration of target vehicle 200b and primary vehicle 200a, respectively, and $t_{prediction}$ corresponds to the prediction time. Choosing a prediction time approximating the overall reaction time of system 100 may account for the fact that desired navigational responses for primary vehicle 200a may not be implemented immediately, and thereby may provide the driver and/or passengers of primary vehicle 200a with a smooth, natural driving experience.

[0357] The predetermined safety distance may be defined as: max $\{d_{static}, d_{dynamic}\}$. d_{static}, which may fall in the range of 2 to 10 meters, may represent a desired safety distance between primary vehicle 200a and another vehicle (such as target vehicle 200b) while the vehicles are stopping and/or moving at a low rate of speed. $d_{dynamic}$ may represent a desired safety distance when the vehicles are moving at a speed greater than a low rate of speed, and may be calculated as: t_{safety} * min $(v_{target}, v_{primary})$, where v_{target} and $v_{primary}$ correspond to the speed of target vehicle 200b and primary vehicle 200a, respectively. t_{safety} may fall in the range of 0.5 to 2.5 seconds and may be adjusted by the driver of primary vehicle 200a via user interface 170 according to the driver's preferences. Thus, the driver may be able to control the distance that system 100 maintains between primary vehicle 200a and other vehicles.

[0358] In a second reaction zone associated with the second threshold, system 100 may place target vehicle 200b in a safety zone and apply different weights to different maneuvers performed by target vehicle 200b. For example, as target vehicle 200b may approach a lower boundary of the safety zone, e.g., the estimated distance-to-target associated with target vehicle 200b may approach the predetermined safety distance (discussed above in connection with the first reaction zone), system 100 may assign more weight to deceleration maneuvers (e.g., mimicked more) and less weight to acceleration maneuvers (e.g., mimicked less). In some embodiments, the lower boundary may fall in the range of 0.5 to 1.5 times the predetermined safety distance, depending on driver preferences. Conversely, as target vehicle 200b approaches an upper boundary of the safety zone, e.g., the estimated distance-to-target associated with target vehicle 200b may approach twice the predetermined safety distance, system 100 may assign less weight to deceleration maneuvers (e.g., mimicked less) and more weight to acceleration maneuvers (e.g., mimicked more). In some embodiments, the lower boundary may fall in the range of 1.5 to 2.5 times the predetermined safety distance, depending on driver preferences.

[0359] In a third reaction zone associated with the third threshold, system 100 may place target vehicle 200b in a danger zone when the estimated distance-to-target associated with target vehicle 200b is less than the predetermined safety distance. In this scenario, system 100 may cause primary vehicle 200a to mimic (e.g., immediately) any deceleration maneuvers (while disregarding any acceleration maneuvers) performed by target vehicle 200b. In some embodiments, the first reaction zone may apply where the estimated distance-to-target associated with target vehicle 200b falls in the range of 0.5 to 1.5 times the predetermined safety distance, depending on driver preferences.

[0360] In some embodiments, system 100 may cause a response in primary vehicle 200a, such as braking. As indicated in FIG. 28B, for example, the distance between the primary vehicle 200a and target vehicle 200b may decrease from d_1 to d_2. Depending on the distance d_2 and, by extension, the time before collision, system 100 may cause primary vehicle 200a to reduce its speed so as to avoid a collision with target vehicle 200b. In addition, system 100 may apply one or more braking profiles when causing primary vehicle 200a to reduce its speed, also based on, for example, the time before collision. Thus, if the time before collision (and/or the distance d_2) exceeds a first predetermined threshold, system 100 may cause primary vehicle 200a to brake in a gradual manner, change lanes, and/or change speed, whereas if the time before collision (and/or the distance d_2) is below a second predetermined threshold, system 100 may cause primary vehicle 200a to brake, change lanes, and/or change speed in a more rapid manner.

[0361] FIG. 29 is an exemplary block diagram of a memory configured to store instructions for performing one or more operations, consistent with the disclosed embodiments. As shown in FIG. 29, memory 140 may store a target monitoring module 2902, an intercept time module 2904, and an action response module 2906. The disclosed embodiments are not limited to any particular configuration of memory 140. Further, processing unit 110 may execute the instructions stored in any of modules 2902-2906 included in memory 140.

[0362] In one embodiment, target monitoring module 2902 may store software instructions (such as computer vision software) which, when executed by processing unit 110, identifies and monitors a target object (such as target vehicle 200b) appearing in a plurality of images representing an environment in the vicinity of primary vehicle 200. For purposes of this disclosure, the target object may also be referred to as target vehicle 200b, although the target object may be a pedestrian, road hazard (e.g., large debris), and the like. The plurality of images may be acquired by one or more of image capture devices 122, 124, and 126. Processing unit 110 may execute target monitoring module 2902 to identify and monitor target vehicle 200b by, for example, analyzing the plurality of images using the techniques described in connection with FIGS. 5A-5D, above. Thus, target monitoring module 2902 may track different variables, such as the motion (e.g., direction of travel and trajectory), speed, and acceleration associated with target vehicle 200b, as well as the distance between primary vehicle 200a and the target vehicle 200b. Such information may be tracked continuously or at predetermined intervals.

[0363] In one embodiment, intercept time module 2904 may store software instructions which, when executed by processing unit 110, determines an indicator of an intercept time between primary vehicle 200a and target vehicle 200b. The intercept time may refer to an amount of time before primary vehicle 200a makes contact (e.g., collides) with target vehicle 200b. Processing unit 110 may execute intercept time module 2904 to determine an indicator of the intercept time based on an analysis of images acquired by one or more of image capture devices 122, 124, and 126. For example, intercept time module 2904 may make the determination using a series of time-based observations, e.g., of the position, speed, and/or acceleration of target vehicle 200b (relative to primary vehicle 200a), such as Kalman filters or linear quadratic estimation (LQE). The Kalman filters may be based on a measurement of the scale of target vehicle 200b, where the scale measurement is proportional to the intercept time.

[0364] In one embodiment, action response module 2906 may store software instructions (such as computer vision software) which, when executed by processing unit 110, causes one or more responses in primary vehicle 200a. The responses may be based on the identification and monitoring of target vehicle 200b (e.g., performed via execution of target monitoring module 2902) and/or the indicator of an intercept time between primary vehicle 200a and target vehicle 200b (e.g., determined via execution of intercept time module 2904). Processing unit 110 may cause one or more responses in primary vehicle 200a by, for example, transmitting electronic signals (e.g., via a CAN bus) to throttling system 220, braking system 230, and/or steering system 240 of primary vehicle 200a to brake, accelerate, or trigger a turn, lane shift, and/or change in direction of primary vehicle 200a. Processing unit 110 may use extended Kalman Filters to estimate data associated with target vehicle 200b and primary vehicle 200a, such as: speed, acceleration, turn rate, pitch angle, pitch rate, position and heading of target vehicle 200b relative to primary vehicle 200a, the size of target vehicle 200b, road geometry, and the like. For example, processing unit 110 may receive measurements from components on primary vehicle 200a, such as an odometer, an inertial measurement unit (IMU), image processor 190, and the like. Thus, processing unit 110 may calculate data associated with target vehicle 200b and/or primary vehicle 200a using state equations derived from kinematic equations of motion, rigidity constraints, and motion assumptions, where inputs to the equations may include measurements from components on primary vehicle 200a. Processing unit 110 may also use the techniques described in connection with FIGS. 4-7, above, to cause one or more responses in primary vehicle 200a.

[0365] FIG. 30 is a flow chart showing an exemplary process 3000 for causing a response in a primary vehicle, consistent with disclosed embodiments. At step 3010, processing unit 110 may receive a plurality of images via data interface 128 between processing unit 110 and image acquisition unit 120. For instance, one or more cameras included in image acquisition unit 120 may capture a plurality of images of an area forward of primary vehicle 200a (or to the sides or rear of a vehicle, for example) and transmit them over a data connection (e.g., digital, wired, USB, wireless, Bluetooth, etc.) to processing unit 110.

[0366] At step 3020, processing unit 110 may execute target monitoring module 2902 to identify a target object (such as target vehicle 200b) within the plurality of images. For example, target monitoring module 2902 may detect the presence of vehicles in the images using the techniques described in connection with FIGS. 5A and 5B, above. Multiple vehicles (and/or objects) may be detected in the same lane or in a different lane as primary vehicle 200a, and at varying distances from primary vehicle 200a, based on image data, position data (e.g., GPS location information), map data, the yaw rate of primary vehicle 200a, lane or other road markings, speed data, and/or data from sensors included in primary vehicle 200a. In a scenario where multiple vehicles are detected, target monitoring module 2902 may determine target vehicle 200b to be the vehicle traveling in the same lane as primary vehicle 200a and/or located closest to primary vehicle 200a.

[0367] At step 3030, processing unit 110 may execute target monitoring module 2902 to monitor target vehicle 200b identified at step 3020. For example, target monitoring module 2902 may track

information associated with target vehicle 200b, such as the motion (e.g., direction of travel and trajectory), speed, and acceleration, as well as the distance between primary vehicle 200a and the target vehicle 200b. Target monitoring module 2902 may track such information continuously, or at predetermined intervals, by analyzing the plurality of images using the techniques described in connection with FIGS. 5A-5D, above. At step 3040, processing unit 110 may execute intercept time module 2904 to determine an indicator of an intercept time between primary vehicle 200a and target vehicle 200b. Intercept time module 2904 may make the determination by tracking the position, speed, and/or acceleration of target vehicle 200b (relative to primary vehicle 200a) over one or more periods of time. Intercept time module 2904 may use the techniques described in connection with FIGS. 5A and 5B, above to track such information.

[0368] At step 3050, processing unit 110 may execute action response module 2906 to cause one or more responses in primary vehicle 200a. For example, processing unit 110 may transmit electronic signals (e.g., via a CAN bus) to throttling system 220, braking system 230, and/or steering system 240 of primary vehicle 200a to brake, accelerate, or trigger a turn, lane shift, and/or change in direction of primary vehicle 200a. Further, one or more actuators may control throttling system 220, braking system 230, and/or steering system 240. For example, processing unit 110 may transmit electronic signals that cause system 100 to physically depress the brake by a predetermined amount or ease partially off the accelerator of vehicle 200. Further, processing unit 110 may transmit electronic signals that cause system 100 to steer vehicle 200 in a particular direction. Such responses may be based on the monitoring of target vehicle 200b (performed at step 3030) and/or the indicator of an intercept time between primary vehicle 200a and target vehicle 200b (determined at step 3040). In some embodiments, the intercept time may be compared with one or more predetermined thresholds, e.g., a first and second intercept threshold. For example, the response may include an emergency avoidance action if the indicator of intercept time indicates that a target object is within a particular intercept threshold (e.g., within the second intercept threshold). The emergency avoidance action may include changing lanes and/or emergency braking.

[0369] The thresholds may be expressed as units of time. Thus, for example, if the indicator of intercept time indicates that target vehicle 200b is outside of the first threshold (e.g., the time before collision between primary vehicle 200a and target vehicle 200b exceeds the first threshold), then action response module 2906 may cause a response in primary vehicle 200a based on an averaged motion profile associated with target vehicle 200b. The averaged motion profile associated with target vehicle 200b may represent an averaged position and/or averaged speed of target vehicle 200b for a particular threshold. In some embodiments, if target vehicle 200b is a certain distance and/or traveling a certain speed, system 100 may elect to take no action. For example, if target vehicle 200b is ahead or a sufficient distance away from primary vehicle 200a (e.g., five meters, 10 meters, etc.), system 100 may not take any action unless target vehicle 200b becomes closer to primary vehicle 200.

[0370] If the indicator of intercept time indicates that target vehicle 200b is between the first and second thresholds (e.g., the time before collision between primary vehicle 200a and target vehicle 200b falls in between the first and second thresholds), then action response module 2906 may cause a response

in primary vehicle 200a based on the actual motion associated with target vehicle 200b. The actual motion may represent a position and/or speed of target vehicle 200b (e.g., not averaged or delayed) If the indicator of intercept time indicates that target vehicle 200b is within the second threshold (e.g., the time before collision between primary vehicle 200a and target vehicle 200b is below the second threshold), then action response module 2906 may cause an emergency action in primary vehicle 200a (such as a lane change or emergency braking).

[0371] FIG. 31 is a flow chart showing an exemplary process 3100 for declining to cause a response in a primary vehicle, consistent with disclosed embodiments. At step 3110, processing unit 110 may receive a plurality of images via data interface 128 between processing unit 110 and image acquisition unit 120, as described in connection with step 3010 of FIG. 30, above.

[0372] At step 3120, processing unit 110 may execute target monitoring module 2902 to locate a target object (e.g., target vehicle 200b) within the images received at step 3010 by analyzing the images, as described in connection with step 3020 of FIG. 30, above. At step 3125, processing unit 110 may execute target monitoring module 2902 to determine whether the target object (e.g., target vehicle 200b) is traveling in a lane different from primary vehicle 200a, using the techniques described in connection with step 3030 of FIG. 30, above. If target vehicle 200b is determined to be traveling in a lane different from primary vehicle 200a (step 3125, yes), processing unit 110 may decline to cause a response in primary vehicle 200a at step 3130. Alternatively, if system 100 determines that target vehicle 200b does not constitute an imminent risk of collision (e.g., target vehicle 200b a nonintersecting trajectory with primary vehicle 200a or a potential time to collision beyond a threshold such that the target object does not pose an imminent risk at the present time), processing unit 110 may decline to cause a response in primary vehicle 200a at step 3130. Otherwise (step 3125, no), process 3100 may conclude and no response occurs.

[0373] Stopping an Autonomously Driven Vehicle Using a Multi-Segment Braking Profile

[0374] System 100 may provide driver assist functionality that monitors and responds to environmental conditions to control the braking of vehicle 200. For instance, system 100 may detect, based on a plurality of images, an object that triggers the stopping of vehicle 200. For example, this object may include another vehicle in the vicinity of vehicle 200, a traffic light, and/or a traffic sign. System 100 may use a braking profile to slow and/or stop vehicle 200. According to some embodiments, the braking profile may include multiple segments, where deceleration is executed at different stages. For example, the braking profile may cause system 100 to stop vehicle 200 at a decreasing rate of deceleration.

[0375] By providing a braking profile that includes multiple segments, system 100 may cause vehicle 200 to operate in a manner that feels natural to a driver and/or passengers. For example, when a driver stops a vehicle at a traffic light, the brakes are typically not applied at a constant rate from the moment they are applied until the moment when the vehicle stops. Operating brakes in such a manner result in an abrupt stop at the end. Instead, the driver may apply the brakes gently at first, then with increasing pressure, and then as the vehicle reaches its target stopping location, the driver may decrease the level of braking until it reaches zero (or near zero) at the moment the car stops. Operating the vehicle

in this manner may provide a natural stopping progression, i.e., the driver may cause-a progressive deceleration at first so the vehicle does not experience an abrupt initial deceleration and then at the end, so that vehicle does not come to an abrupt stop.

[0376] System 100 may provide autonomous vehicle navigation that may implement braking according to an approach that feels natural to the driver and/or passengers of vehicle 200. For example, in some embodiments, system 100 may cause one or more of image capture devices 122-126 to acquire a plurality of images of an area in a vicinity of vehicle 200. Processing device 110 may receive the receive the plurality of images via data interface 128 and identify, based on analysis of the plurality of images, a trigger (e.g., an object, a traffic light, and/or a traffic sign) for stopping vehicle 200. Based on the identified trigger, system 100 may cause vehicle 200 to stop according to a braking profile. In some embodiments, the braking profile may include a plurality of segments (e.g., including a first segment associated with a first deceleration rate, a second segment which includes a second deceleration rate less than the first deceleration rate, and a third segment in which a level of braking is decreased as a target stopping location is approached, as determined based on the analysis of the plurality of images.

[0377] FIG. 32A illustrates vehicle 200 traveling on a roadway 3210 that includes an object 3220. System 100 may identify a trigger (e.g., object 3220) for stopping vehicle 200 in respect to detection of the trigger. For example, system 100 may first slow vehicle 200 after the trigger is detected and bring vehicle 200 to a stop before reaching object 3220.

[0378] Processing unit 110 may be configured to determine a trigger for stopping vehicle 200 based on a plurality of images acquired by one or more of image capture devices 122–126. Processing unit 110 may receive the images from image capture devices 122-126 via data interface 128. According to some embodiments, the trigger may include object 3220. For example, object 3220 may be another vehicle on roadway 2810. According to some embodiments, processing unit 110 may identify a trigger if object 3220 is within a certain vicinity of vehicle 200. For example, identification of the trigger may depend on a relative distance between object 3220 and vehicle 200. Further, this identification may optionally consider the relative velocity and/or relative acceleration between object 3220 and vehicle 200.

[0379] Additionally or alternatively, the trigger may include a traffic sign, such as traffic sign 3240 shown in FIG. 32A. For example, traffic sign 3240 may be a stop sign and/or a speed limit sign. According to some embodiments, processing unit 110 may process the plurality of images to determine the content of traffic sign 3240 as part of determining whether a trigger exists. For example, processing unit 110 may determine that a trigger is present based on a speed limit specified by traffic sign 3240 if vehicle 200 is exceeding the speed limit. As another example, processing unit 110 may determine a trigger exists based on a traffic light 2830 if the yellow and/or red light is on.

[0380] Based on the plurality of images, processing unit 110 may determine a target stopping location 3250 at which vehicle 200 will stop once a braking profile is executed. Reaching target stopping location 3250 may be accompanied by a release in braking pressure of vehicle 200. Target stopping location 3250 may be based on the location of traffic light 3230 and/or traffic sign 3240 such that vehicle 200 complies with traffic light 3230 and/or traffic sign 3240. Alternatively, target stopping location 3250

may be based on object 3220 such that vehicle 200 stops before reaching object 3220. Accordingly, target stopping location 3250 may be based on the location of object 3220 to avoid a collision between vehicle 200 and object 3220. In some embodiments, target stopping location 3250 may be updated based on new information obtained from the plurality of images, such as newly identified targets, newly visible obstacles, newly visible signs, etc.

[0381] FIG. 32B illustrates an exemplary braking profile, consistent with disclosed embodiments. In the example shown in FIG. 32B, the braking profile includes four segments. However, the number of segments is exemplary and a braking profile consistent with the disclosed embodiments may include any appropriate number of segments (e.g., 2, 3, 4, 5, 6, etc., segments).

[0382] In segment 1, system 100 may prepare for a possible braking scenario. For example, in this zone, system 100 may receive information (e.g., map data and/or image data) about an upcoming intersection (e.g., an intersection with traffic lights). System 100 may gradually reduce the speed of vehicle 200 (e.g., the speed of vehicle 200 may be gradually reduced to about 70-50 km/hr, depending on the characteristics of the intersection). System 100 may cause the speed adjustment, for example, approximately 100-200 meters before the junction at average deceleration around 0.2-0.4 m/sec^2 (with a maximum of about 0.5 m/sec^2). By decreasing the speed of vehicle 200 in segment 1, system 100 may provide the driver and/or passengers of vehicle 200 with confidence that system 100 is aware of the approaching intersection.

[0383] In segment 2, system 100 may apply strong braking. In this segment, system 100 may receive information based on the analysis of image data that, for example, a traffic light is red and/or there is a stopped vehicle at the intersection in the line in which vehicle 200 is traveling. System 100 may cause vehicle 200 to experience significant speed reduction in this zone, while the distance to the stop line or stopped vehicle is still large. Doing so may provide the driver and/or passengers of vehicle 200 with a comfortable feeling that system 100 will have more than enough space to complete the braking maneuver. This zone may be approximately 30-100 meters away from the stop line, and the average deceleration may be about 1.5-2.5 m/sec^2 (with a maximum of about 3.5 m/sec^2).

[0384] In segment 3, system 100 may make a moderate braking adjustment. For example, in this segment, system 100 may adjust the speed of vehicle 200 according to the remaining distance to the stop line or stopped vehicle and based on the current speed and deceleration of vehicle 200. By making this adjustment, system 100 may provide the driver and/or passengers of vehicle 200 with an indication that system 100 is releasing most of the braking power while the speed is still being reduced but slower than before. This zone may be approximately 5-30 meters away from the stop line or stopped vehicle, and the average deceleration may be about 0.5-1.5 m/sec^2 (with a maximum of about 2 m/sec^2).

[0385] In segment 4, system 100 may make a small braking adjustment. In this segment, system 100 may close the remaining distance to the stop line or stopped vehicle at a very low speed gradually bringing it to zero. In this zone, the driver and/or passengers may feel that vehicle 200 is slowly sliding into its position (e.g., at the stop line or behind another vehicle). This zone may constitute approximately

the last 5-7 meters to the stop line or stopped vehicle, and the average deceleration may be about 0.3-0.5 m/sec^2 (with a maximum of about 1 m/sec^2).

[0386] FIG. 33 is an exemplary block diagram of memory 140 and/or 150, which may store instructions for performing one or more operations consistent with disclosed embodiments. As illustrated in FIG. 33, memory 140 may store one or more modules for performing the trigger detection and responses described herein. For example, memory 140 may store a trigger identification module 3300 and an action response module 3310.

[0387] Trigger identification module 3300 may store instructions which, when executed by processing unit 110, may detect the presence and/or existence of a trigger for stopping vehicle 200. For example, trigger identification module 3300 may process the plurality of images received from at least one image capture device 122--124 to detect the presence of a trigger. As discussed above, this may include identifying object 3220, traffic light 3230, and/or traffic sign 3240.

[0388] Action response module 3310 may store instructions which, when executed by processing unit 110, may respond to the presence of a trigger. For example, action response module 3310 may execute control to decelerate and/or stop vehicle 200. For example, action response module 3310 may execute a braking profile to decelerate and/or stop vehicle 200. The action response module 3310 may determining to execute one of a plurality of braking profiles based on a number of braking profiles based on, for example, environmental factors, the type of trigger detected, and the velocity of vehicle 200. To navigate vehicle 200 to a stop based on the detected trigger, processing unit 110 may transmit electronic signals to one or more of throttling system 220, braking system 230, and/or steering system 240 of vehicle 200. Further, one or more actuators may control throttling system 220, braking system 230, and/or steering system 240. For example, processing unit 110 may transmit electronic signals that cause system 100 to physically depress the brake by a predetermined amount.

[0389] Fig. 34 illustrates a process 3400 for navigating vehicle 200, consistent with disclosed embodiments. Process 3000 may identify a trigger (e.g., an object, vehicle, traffic light, traffic sign, etc.) for stopping vehicle 200 and execute a braking profile in response to the detection of the trigger. Process 3400 may detect various types of triggers determine which of a plurality of braking profiles to execute.

[0390] The braking profile may be based on the type of a detected trigger and/or other environmental conditions related to the detected trigger (e.g., a distance to an object). For example, in some embodiments, the braking profile may include a plurality of segments (e.g., three segments). In a three segment braking profile, a first segment of the braking profile may be associated with a first deceleration rate, a second segment of the braking profile may include a second deceleration rate less than the first deceleration rate, and a third segment of the braking profile may include causing a level of braking to be decreased as a target stopping location is approached, as determined based on an analysis of a plurality of images acquired by one or more of image capture devices 122-126. For example, in some embodiments, the first segment may cause vehicle 200 to progressively increase deceleration, the second segment may cause vehicle 200 to decelerate at a constant rate, and the third segment may cause vehicle 200 to progressively decrease its deceleration rate to zero (or near zero).

[0391] At step 3410, process 3400 may acquire, using at least one of image capture devices 122-126, a plurality of images of an area in the vicinity of vehicle 200. For example, processing unit 110 may receive the plurality of images may through data interface 128. Processing unit 110 may be configured to determine the presence of one or more objects and/or signs located on or near roadway 3210 based on the acquired images. For example, processing unit 110 may be configured to determine the presence of object 3220, traffic light 3230, and/or traffic sign 3240. Processing unit 110 may be further configured to read the content of traffic sign 3240. For example, processing unit 110 may be configured to differentiate between a speed limit sign and a stop sign. Further, processing unit 110 may be configured to process images to determine the speed limit based on traffic sign 3240.

[0392] At step 3420, process 300 may include a trigger for stopping vehicle 200. For example, processing unit 110 may identify a trigger based on the presence of object 3220 within the vicinity of vehicle 200. Additionally or alternatively, processing unit 110 may identify a trigger based on a current signal status of traffic light 3230. According to some embodiments, processing unit 110 may determine that traffic light 3230 constitutes a trigger if it is not green. According to some embodiments, processing unit 110 may determine that traffic sign 3240 constitutes a trigger if it is a stop sign, for example. In some embodiments, traffic sign 3240 may constitute a trigger if it is a speed limit sign and vehicle 200 is exceeding the posted speed limit. Further in some embodiments, processing unit 110 may cause system 100 to provide an audible announcement identifying the trigger and/or indicating that vehicle 200 is braking or about to begin braking.

[0393] After processing unit 110 identifies the trigger, at step 3430, processing unit 110 may cause vehicle 200 to slow down and/or stop according to a braking profile. In some embodiments, the braking profile may comprise a number of profile segments. The different profile segments of a braking profile may be defined by a time period and/or a vehicle speed. For example, processing unit 110 may execute controls of vehicle 200 in accordance with a first profile segment for a predetermined period of time or until the speed of vehicle 200 reaches a target value. The target value may be a predetermined speed or it may be a percentage of the speed that vehicle 200 was traveling prior to execution of the braking profile. To implement the braking profile, processing unit 110 may transmit electronic signals to one or more of throttling system 220, braking system 230, and/or steering system 240 of vehicle 200. Further, one or more actuators may control throttling system 220, braking system 230, and/or steering system 240.

[0394] As discussed above, according to some embodiments, a profile segment of the braking profile may correspond to a deceleration rate. For example, a braking profile may include multiple segments, and the first segment may be associated with a first deceleration rate. The braking profile may further include a second segment associated with a second deceleration rate. The second deceleration rate may be less than first deceleration rate.

[0395] Further, as discussed above, according to some embodiments, braking profile may include a third profile segment in which a level of braking is decreased as a function of the distance between vehicle 200 and underlying factors that give rise to the trigger (e.g., object 3220, traffic light

3230, traffic sign 3240). For example, the braking profile may include decreasing the level of braking as vehicle 200 approaches target stopping location 3250. Further, reaching target stopping location 3250 may be accompanied by a release in braking pressure of vehicle 200.

[0396] The foregoing description has been presented for purposes of illustration. It is not exhaustive and is not limited to the precise forms or embodiments disclosed. Modifications and adaptations will be apparent to those skilled in the art from consideration of the specification and practice of the disclosed embodiments. Additionally, although aspects of the disclosed embodiments are described as being stored in memory, one skilled in the art will appreciate that these aspects can also be stored on other types of computer readable media, such as secondary storage devices, for example, hard disks or CD ROM, or other forms of RAM or ROM, USB media, DVD, Blu-ray, or other optical drive media.

[0397] Computer programs based on the written description and disclosed methods are within the skill of an experienced developer. The various programs or program modules can be created using any of the techniques known to one skilled in the art or can be designed in connection with existing software. For example, program sections or program modules can be designed in or by means of .Net Framework, .Net Compact Framework (and related languages, such as Visual Basic, C, etc.), Java, C++, Objective-C, HTML, HTML/AJAX combinations, XML, or HTML with included Java applets.

[0398] Moreover, while illustrative embodiments have been described herein, the scope of any and all embodiments having equivalent elements, modifications, omissions, combinations (e.g., of aspects across various embodiments), adaptations and/or alterations as would be appreciated by those skilled in the art based on the present disclosure. The limitations in the claims are to be interpreted broadly based on the language employed in the claims and not limited to examples described in the present specification or during the prosecution of the application. The examples are to be construed as non-exclusive. Furthermore, the steps of the disclosed methods may be modified in any manner, including by reordering steps and/or inserting or deleting steps. It is intended, therefore, that the specification and examples be considered as illustrative only, with a true scope and spirit being indicated by the following claims and their full scope of equivalents.

WHAT IS CLAIMED IS:

1. A driver assist navigation system for a primary vehicle, the system comprising:

at least one image capture device configured to acquire a plurality of images of an area in a vicinity of the primary vehicle;

a data interface; and

at least one processing device configured to:

receive the plurality of images via the data interface;

determine, from at least some of the plurality of images, a first lane constraint on a first side of the primary vehicle;

determine, from at least some of the plurality of images, a second lane constraint on a second side of the primary vehicle opposite to the first side of the primary vehicle, wherein the first and second lane constraints define a lane within which the primary vehicle travels;

cause the primary vehicle to travel within the first and second lane constraints;

locate in the plurality of images a leading vehicle;

determine, based on the plurality of images, at least one action taken by the leading vehicle; and

cause the primary vehicle to mimic the at least one action of the leading vehicle.

2. The system of claim 1, wherein at least one of the first and second lane constraints includes a line marked on a road surface.

3. The system of claim 1, wherein at least one of the first and second lane constraints includes an edge of a road surface.

4. The system of claim 1, wherein at least one of the first and second lane constraints includes a determined midpoint of a road surface width.

5. The system of claim 1, wherein the at least one action taken by the leading vehicle includes a turn, and the at least one processing device causes the primary vehicle to execute a similar turn beginning at a location at which the leading vehicle initiated its turn.

6. The system of claim 1, wherein the at least one action taken by the leading vehicle includes an acceleration.

7. The system of claim 1, wherein the at least one action taken by the leading vehicle includes braking.

8. The system of claim 1, wherein the at least one action taken by the leading vehicle includes providing a first offset distance on a side of the leading vehicle adjacent to the first lane constraint that is different from a second offset distance on a side of the leading vehicle adjacent to the second lane constraint.

9. The system of claim 1, wherein the at least one processing device is further configured to:

determine, based on the plurality of images or based on map data and position information, whether the leading vehicle is turning at an intersection; and

if the leading vehicle is determined to be turning at an intersection, decline to mimic the turn of the leading vehicle.

10. The system of claim 1, wherein the at least one processing device is further configured to:

determine, based on the plurality of images or based on map data and position information, whether the leading vehicle is turning at an intersection;

determine whether the leading vehicle is changing lanes within the intersection;

mimic the turn of the leading vehicle if the leading vehicle is determined to be turning at an intersection and not changing lanes within the intersection; and

decline to mimic the turn of the leading vehicle if the leading vehicle is determined to be turning at an intersection, but changing lanes within the intersection.

11. The system of claim 1, wherein the at least one processing device is further configured to:

acquire a first leading vehicle based on the plurality of images;

acquire a second leading vehicle based on the plurality of images; and

cause the primary vehicle to mimic the first leading vehicle if, based on the plurality of images, the first leading vehicle is determined to be continuing on a path having less of a turning radius than a path followed by the second leading vehicle.

12. The system of claim 1, wherein the at least one processing device is further configured to:

determine position information for the leading vehicle and compare the position information to predetermined map data;

create a navigation history for the leading vehicle by tracking movements of the leading vehicle relative to the predetermined map data; and

determine whether to cause the primary vehicle to mimic the at least one action of the leading vehicle based on the navigation history of the leading vehicle.

13. The system of claim 12, wherein the at least one processing device is configured to:

cause the primary vehicle to mimic a turn of the leading vehicle, even where no turn is detected based on the plurality of images, when the navigation history indicates that the leading vehicle has successfully navigated at least one prior turn.

14. A primary vehicle, comprising:

a body;

at least one image capture device configured to acquire a plurality of images of an area in a vicinity of the primary vehicle;

a data interface; and

at least one processing device configured to:

receive the plurality of images via the data interface;

determine, from at least some of the plurality of images, a first lane constraint on a first side of the primary vehicle;

determine, from at least some of the plurality of images, a second lane constraint on a second side of the primary vehicle opposite to the first side of the primary vehicle, wherein the first and second lane constraints define a lane within which the primary vehicle travels;

cause the primary vehicle to travel within the first and second lane constraints;

locate in the plurality of images a leading vehicle;

determine, based on the plurality of images, at least one action taken by the leading vehicle; and

cause the primary vehicle to mimic the at least one action of the leading vehicle.

15. The primary vehicle of claim 14, wherein at least one of the first and second lane constraints includes a line marked on a road surface.

16. The primary vehicle of claim 14, wherein at least one of the first and second lane constraints includes an edge of a road surface.

17. The primary vehicle of claim 14, wherein at least one of the first and second lane constraints includes a determined midpoint of a road surface width.

18. The primary vehicle of claim 14, wherein the at least one action taken by the leading vehicle includes a turn, and the at least one processing device causes the primary vehicle to execute a similar turn beginning at a location at which the leading vehicle initiated its turn.

19. The primary vehicle of claim 14, wherein the at least one action taken by the leading vehicle includes an acceleration.

20. The primary vehicle of claim 14, wherein the at least one action taken by the leading vehicle includes braking.

21. The primary vehicle of claim 14, wherein the at least one action taken by the leading vehicle includes providing a first offset distance on a side of the leading vehicle adjacent to the first lane constraint that is different from a second offset distance on a side of the leading vehicle adjacent to the second lane constraint.

22. The primary vehicle of claim 14, wherein the at least one processing device is further configured to:

determine, based on the plurality of images or based on map data and position information, whether the leading vehicle is turning at an intersection; and

if the leading vehicle is determined to be turning at an intersection, decline to mimic the turn of the leading vehicle.

23. The primary vehicle of claim 14, wherein the at least one processing device is further configured to:

determine, based on the plurality of images or based on map data and position information, whether the leading vehicle is turning at an intersection;

determine whether the leading vehicle is changing lanes within the intersection;

mimic the turn of the leading vehicle if the leading vehicle is determined to be turning at an intersection and not changing lanes within the intersection; and

decline to mimic the turn of the leading vehicle if the leading vehicle is determined to be turning at an intersection, but changing lanes within the intersection.

24. The primary vehicle of claim 14, wherein the at least one processing device is further configured to:

acquire a first leading vehicle based on the plurality of images;

acquire a second leading vehicle based on the plurality of images; and

cause the primary vehicle to mimic the first leading vehicle if, based on the plurality of images, the first leading vehicle is determined to be continuing on a path having less of a turning radius than a path followed by the second leading vehicle.

25. The primary vehicle of claim 14, wherein the at least one processing device is further configured to:

determine position information for the leading vehicle and compare the position information to predetermined map data;

create a navigation history for the leading vehicle by tracking movements of the leading vehicle relative to the predetermined map data; and

determine whether to cause the primary vehicle to mimic the at least one action of the leading vehicle based on the navigation history of the leading vehicle.

26. The primary vehicle of claim 25, wherein the at least one processing device is configured to:

cause the primary vehicle to mimic a turn of the leading vehicle, even where no turn is detected based on the plurality of images, when the navigation history indicates that the leading vehicle has successfully navigated at least one prior turn.

27. A method for navigating a primary vehicle, the method comprising:

acquiring, using at least one image capture device, a plurality of images of an area in a vicinity of the primary vehicle;

determining, from at least some of the plurality of images, a first lane constraint on a first side of the primary vehicle;

determining, from at least some of the plurality of images, a second lane constraint on a second side of the primary vehicle opposite to the first side of the primary vehicle, wherein the first and second lane constraints define a lane within which the primary vehicle travels;

causing the primary vehicle to travel within the first and second lane constraints;

locating in the plurality of images a leading vehicle;

determining, based on the plurality of images, at least one action taken by the leading vehicle; and

causing the primary vehicle to mimic the at least one action of the leading vehicle.

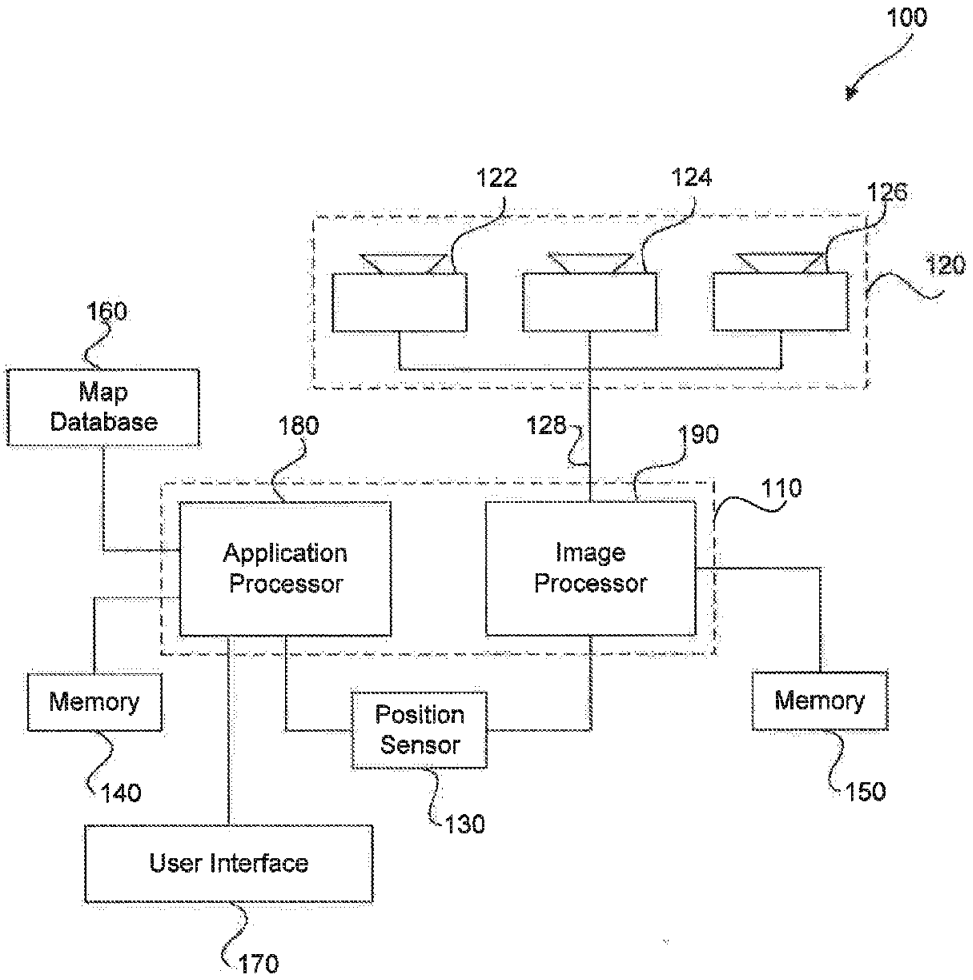
100
122
124
126
120
160
Map Database
180
128
190
110
Application Processor
Image Processor
Memory
Position Sensor
Memory
140
130
150
User Interface
170

FIG. 1

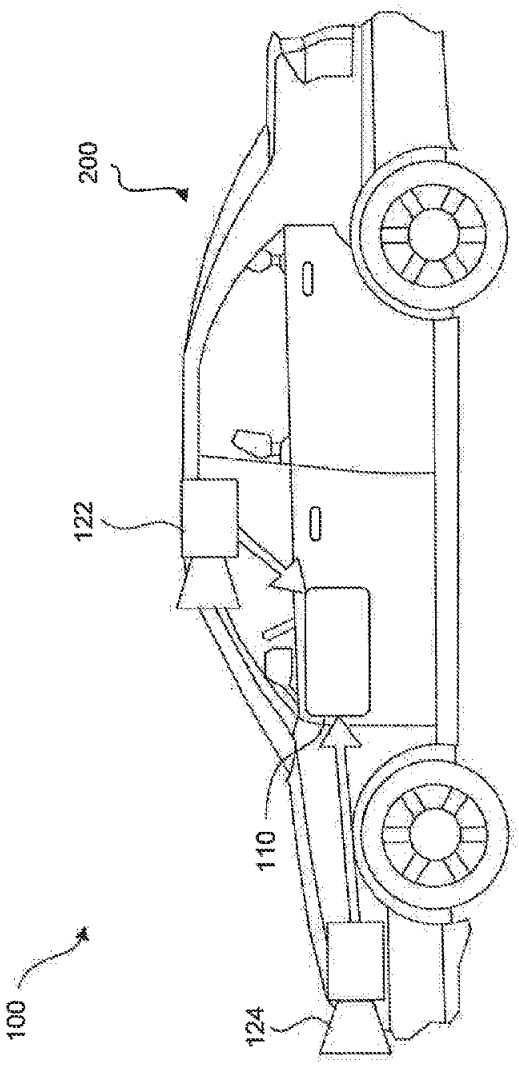

FIG. 2A

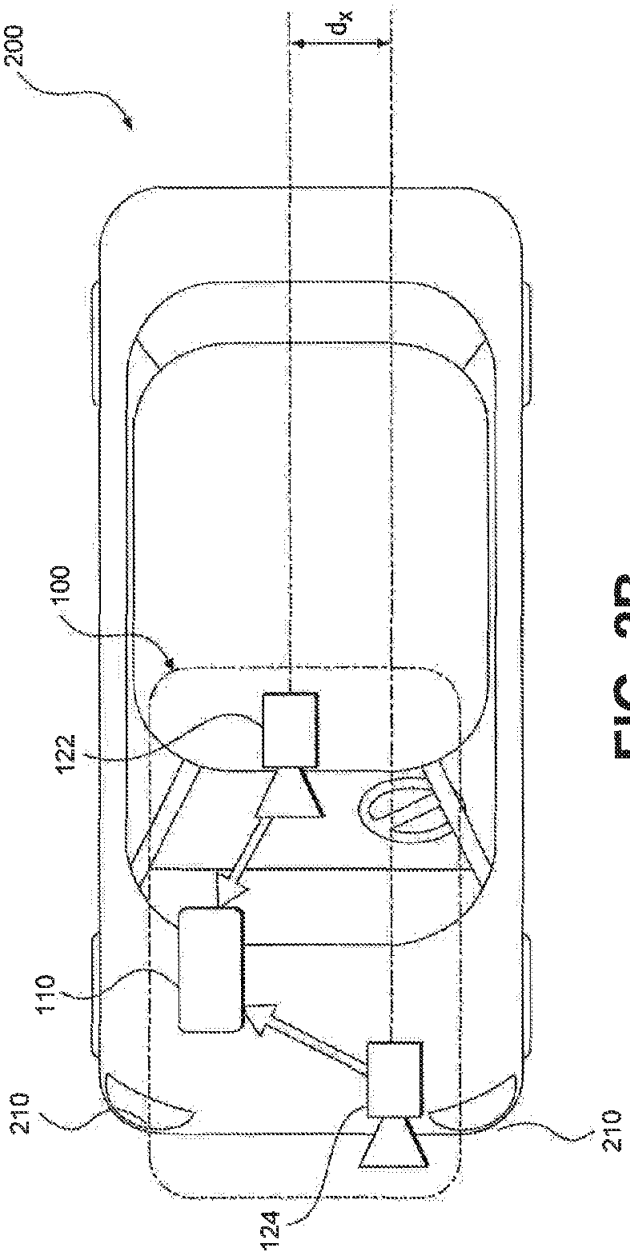

FIG. 2B

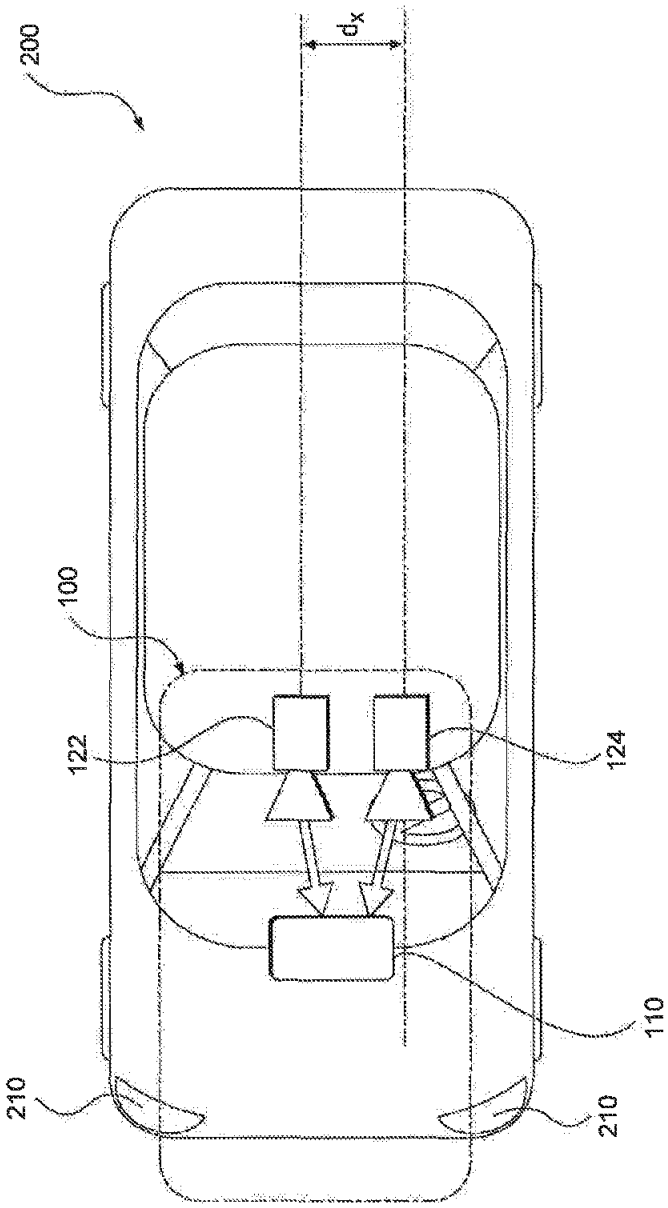

FIG. 2C

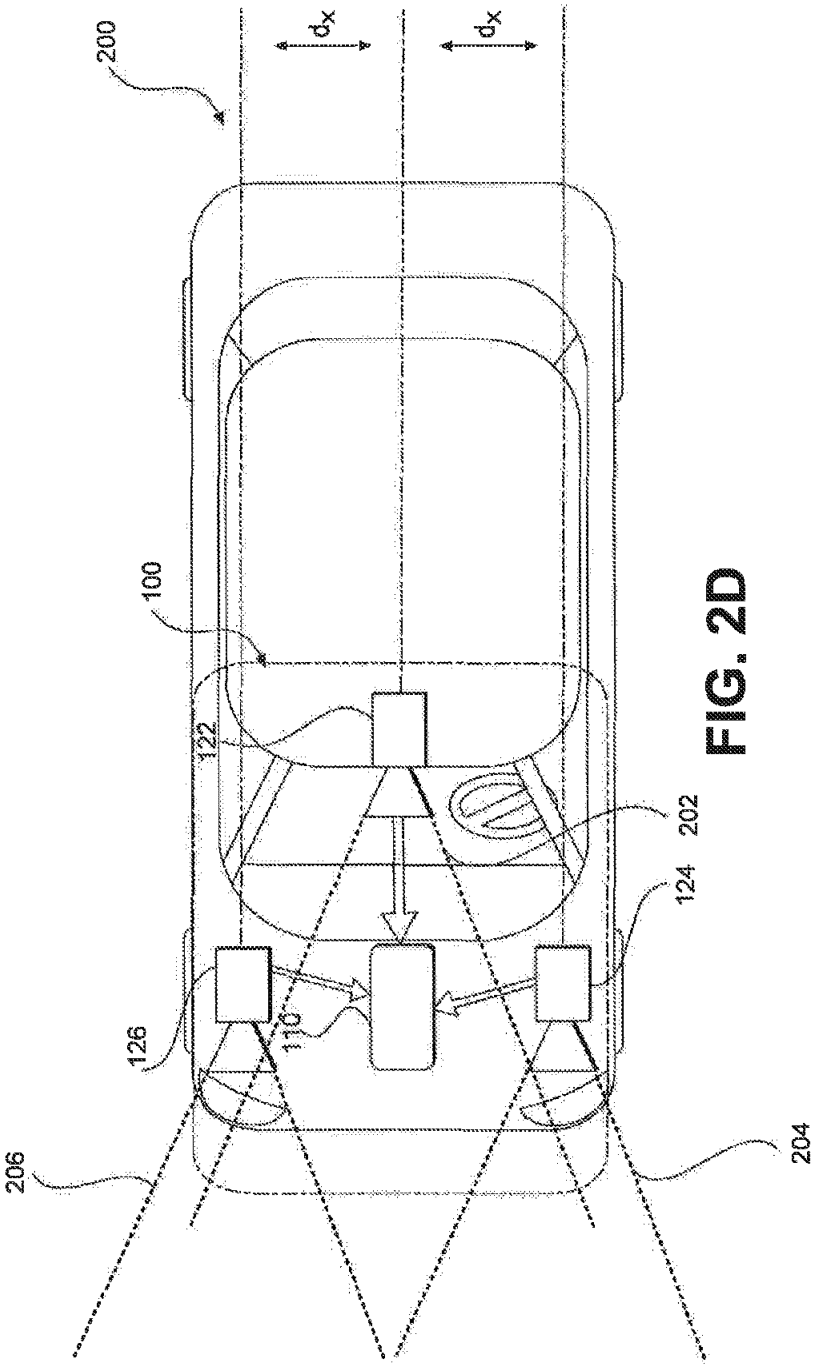

FIG. 2D

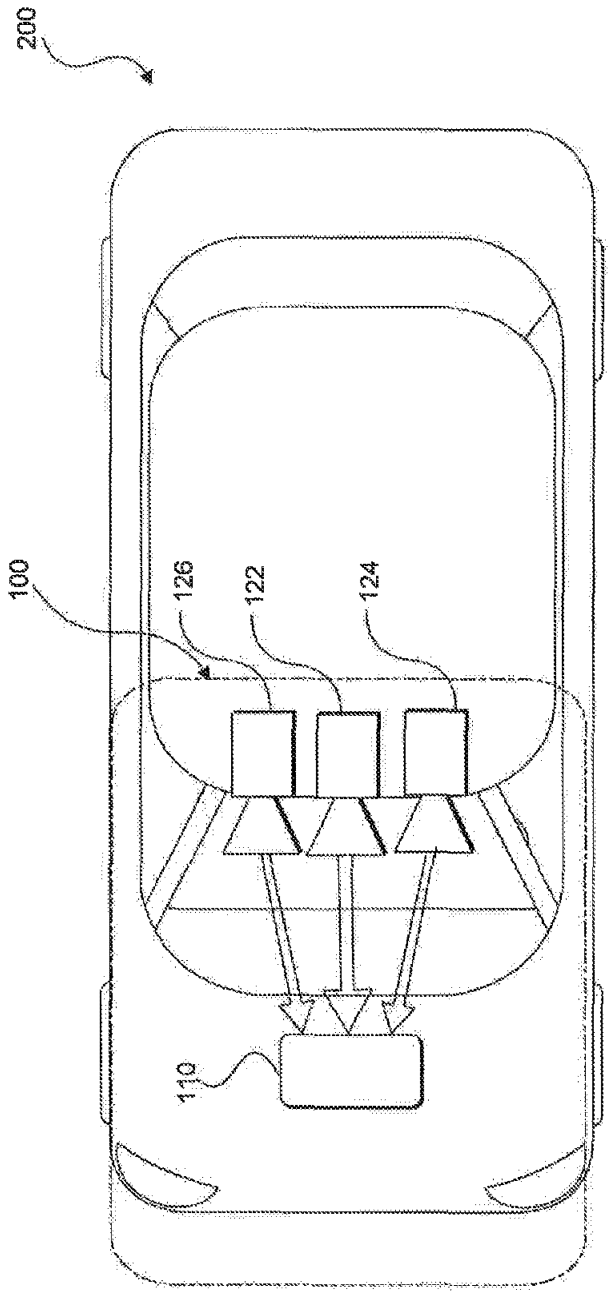

FIG. 2E

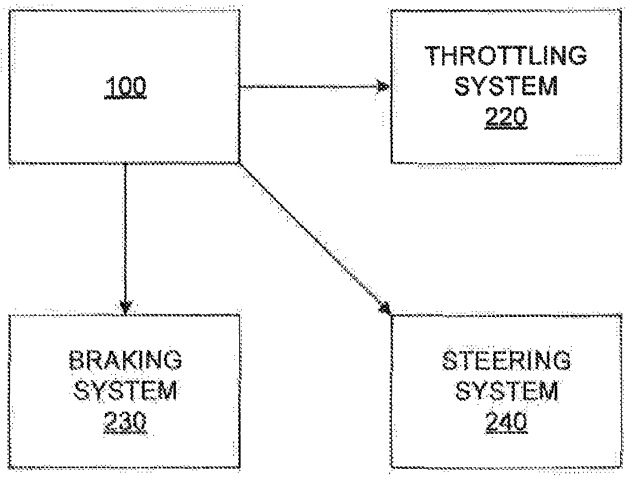
100
THROTTLING SYSTEM 220
BRAKING SYSTEM 230
STEERING SYSTEM 240

FIG. 2F

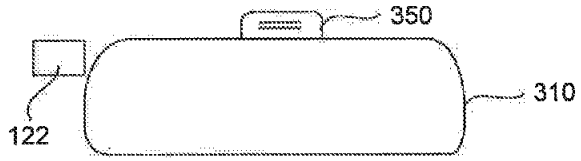

170

320

[redacted]

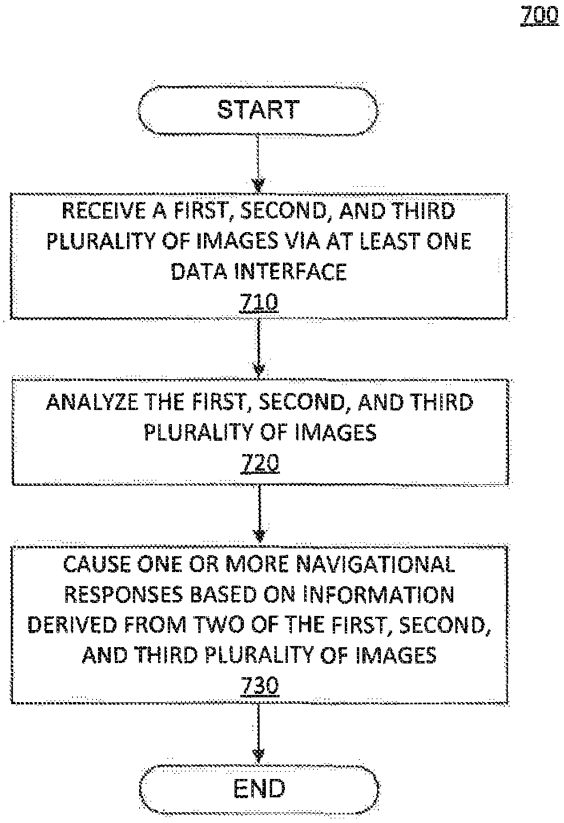
700
START
RECEIVE A FIRST, SECOND, AND THIRD PLURALITY OF IMAGES VIA AT LEAST ONE DATA INTERFACE
710
ANALYZE THE FIRST, SECOND, AND THIRD PLURALITY OF IMAGES
720
CAUSE ONE OR MORE NAVIGATIONAL RESPONSES BASED ON INFORMATION DERIVED FROM TWO OF THE FIRST, SECOND, AND THIRD PLURALITY OF IMAGES
730
END

FIG. 7

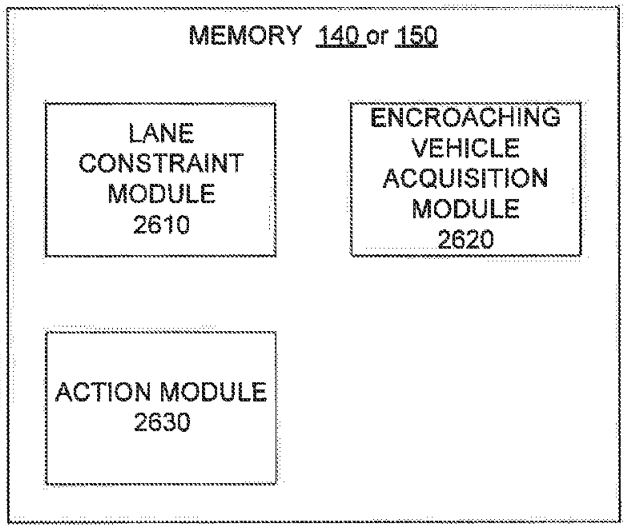
MEMORY 140 or 150
LANE CONSTRAINT MODULE 2610
ENCROACHING VEHICLE ACQUISITION MODULE 2620
ACTION MODULE 2630

FIG. 26

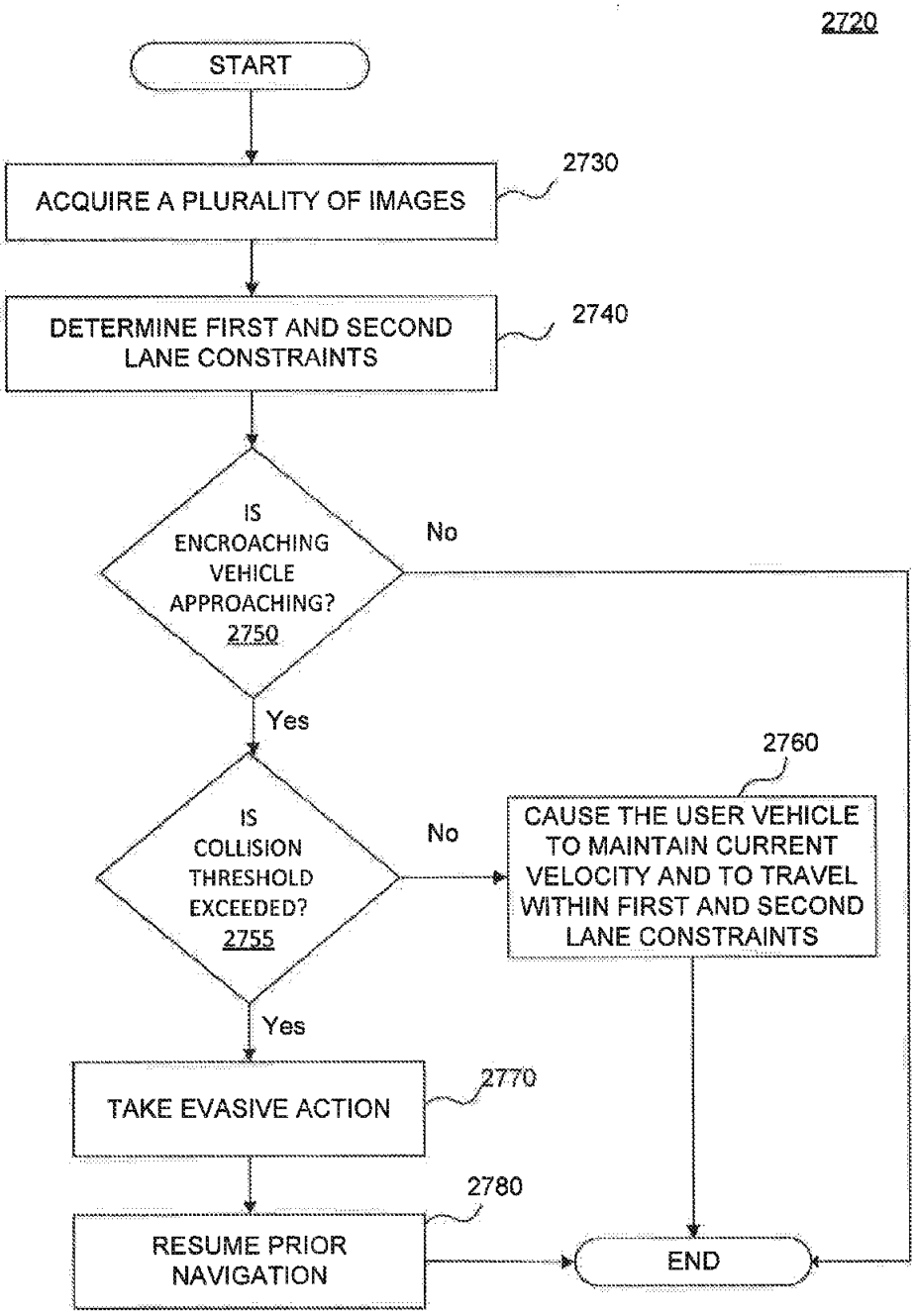
2720
START
ACQUIRE A PLURALITY OF IMAGES
2730
DETERMINE FIRST AND SECOND LANE CONSTRAINTS
2740
IS ENCROACHING VEHICLE APPROACHING? 2750
No
Yes
IS COLLISION THRESHOLD EXCEEDED? 2755
No
2760
CAUSE THE USER VEHICLE TO MAINTAIN CURRENT VELOCITY AND TO TRAVEL WITHIN FIRST AND SECOND LANE CONSTRAINTS
Yes
TAKE EVASIVE ACTION
2770
2780
RESUME PRIOR NAVIGATION
END

FIG. 27

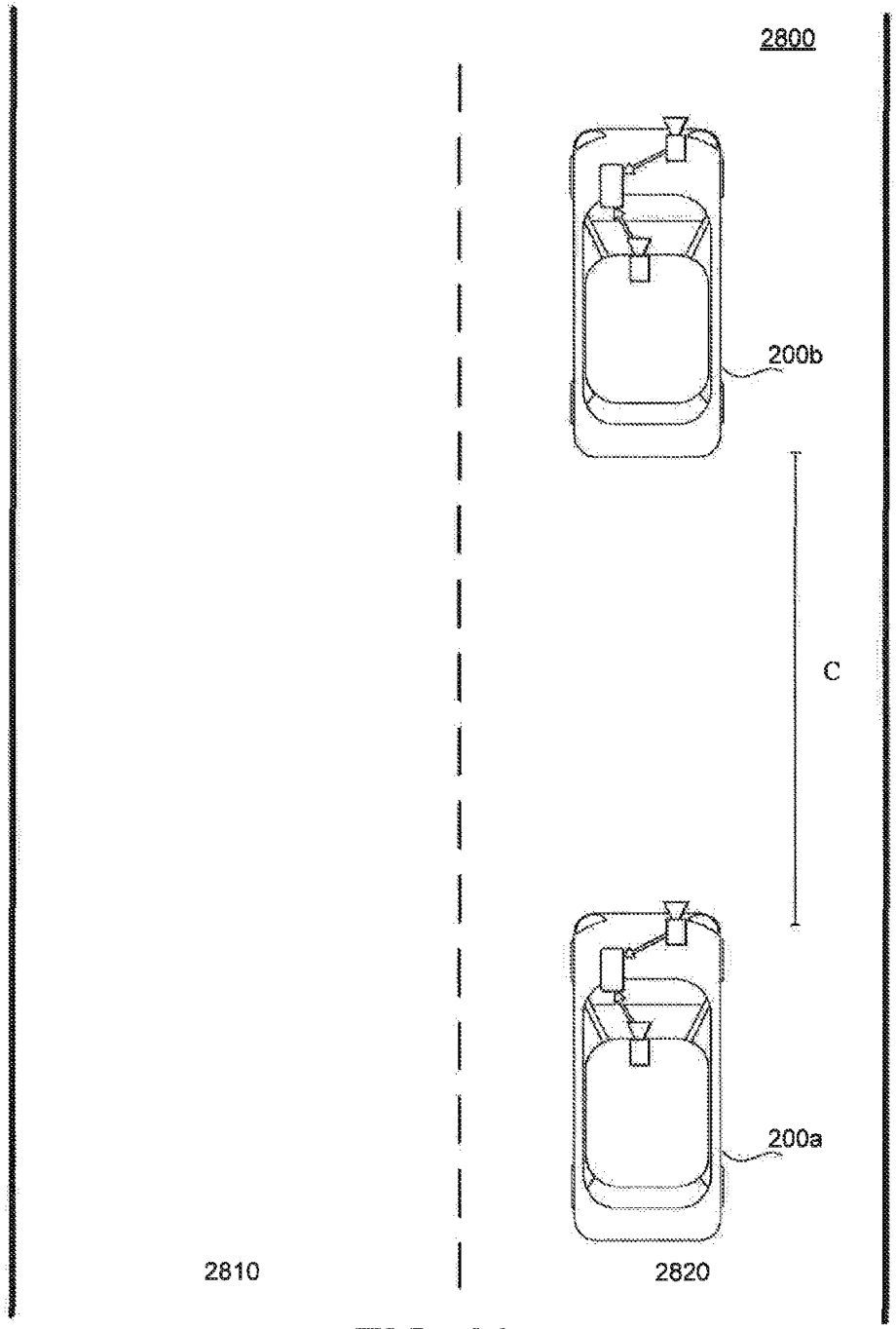

FIG. 28A

INTERNATIONAL SEARCH REPORT

Information on patent family members

International application No
PCT/IB2014/003151

Patent document cited in search report		Publication date	Patent family member(s)			Publication date
US 2011190972	A1	04-08-2011	CN	102139696	A	03-08-2011
			DE	102011009665	A1	01-12-2011
			US	2011190972	A1	04-08-2011
US 8504233	B1	06-08-2013	CN	104395168	A	04-03-2015
			EP	2841316	A1	04-03-2015
			KR	20140131601	A	13-11-2014
			US	8504233	B1	06-08-2013
			US	2014018995	A1	16-01-2014
			WO	2013162847	A1	31-10-2013

Form PCT/ISA/210 (patent family annex) (April 2005)

(12) INTERNATIONAL APPLICATION PUBLISHED UNDER THE PATENT COOPERATION TREATY (PCT)

(19) World Intellectual Property Organization
International Bureau

(43) International Publication Date
27 August 2015 (27.08.2015)

WIPO | PCT

(10) International Publication Number
WO 2015/125022 A2

(51) International Patent Classification: Not classified

(21) International Application Number: PCT/IB2015/000673

(22) International Filing Date: 20 February 2015 (20.02.2015)

(25) Filing Language: English

(26) Publication Language: English

(30) Priority Data:
61/942,088 20 February 2014 (20.02.2014) US

(71) Applicant: **MOBILEYE VISION TECHNOLOGIES LTD.** [IL/IL]; 13 Hartom Street, P.O.B. 45157, Har Hotzvim, 91450 Jerusalem (IL).

(72) Inventors: **ROSENBLUM, Kevin**; 13 Hartom Street, P.O.B. 45157, 91450 Har Hotzvim (IL). **DAGAN, Erez**; 13 Hartom Street, P.O.B. 45157, 91450 Har Hotzvim (IL).

(81) Designated States *(unless otherwise indicated, for every kind of national protection available)*: AE, AG, AL, AM, AO, AT, AU, AZ, BA, BB, BG, BH, BN, BR, BW, BY, BZ, CA, CH, CL, CN, CO, CR, CU, CZ, DE, DK, DM, DO, DZ, EC, EE, EG, ES, FI, GB, GD, GE, GH, GM, GT, HN, HR, HU, ID, IL, IN, IR, IS, JP, KE, KG, KN, KP, KR, KZ, LA, LC, LK, LR, LS, LU, LY, MA, MD, ME, MG, MK, MN, MW, MX, MY, MZ, NA, NG, NI, NO, NZ, OM, PA, PE, PG, PH, PL, PT, QA, RO, RS, RU, RW, SA, SC, SD, SE, SG, SK, SL, SM, ST, SV, SY, TH, TJ, TM, TN, TR, TT, TZ, UA, UG, US, UZ, VC, VN, ZA, ZM, ZW.

(84) Designated States *(unless otherwise indicated, for every kind of regional protection available)*: ARIPO (BW, GH, GM, KE, LR, LS, MW, MZ, NA, RW, SD, SL, ST, SZ, TZ, UG, ZM, ZW), Eurasian (AM, AZ, BY, KG, KZ, RU, TJ, TM), European (AL, AT, BE, BG, CH, CY, CZ, DE, DK, EE, ES, FI, FR, GB, GR, HR, HU, IE, IS, IT, LT, LU, LV, MC, MK, MT, NL, NO, PL, PT, RO, RS, SE, SI, SK, SM, TR), OAPI (BF, BJ, CF, CG, CI, CM, GA, GN, GQ, GW, KM, ML, MR, NE, SN, TD, TG).

Published:

— *without international search report and to be republished upon receipt of that report (Rule 48.2(g))*

(54) Title: NAVIGATION BASED ON RADAR-CUED VISUAL IMAGING

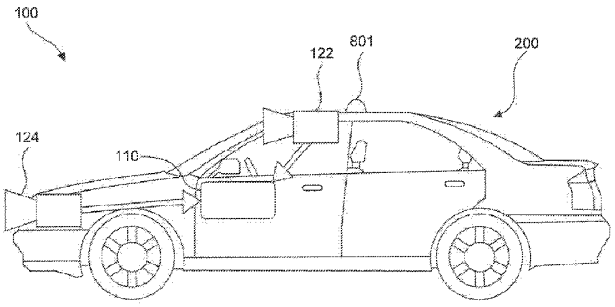

FIG. 9A

(57) Abstract: A navigation system for a vehicle may include at least one image capture device configured to acquire a plurality of images of an environment of a vehicle and a radar sensor to detect an object in the environment of the vehicle and to provide and output including range information indicative of at least one of a range or range rate between the vehicle and the object. The system may also include at least one processing device programmed to: receive the plurality of images from the at least one image capture device; receive the output from the radar sensor; determine, for each of a plurality of image segments in a first image, from among the plurality of images, and corresponding image segments in a second image, from among the plurality of images, an indicator of optical flow; use range information determined based on the output of the radar sensor together with the indicators of optical flow determined for each of the plurality of image segments in the first image and the corresponding image segments in the second image to calculate for each of a plurality of imaged regions at least one value indicative of a focus of expansion; identify a target object region, including at least a subset of the plurality of imaged regions that share a substantially similar focus of expansion; and cause a system response based on the identified target object region.

WO 2015/125022 A2

NAVIGATION BASED ON RADAR-CUED VISUAL IMAGING

Cross Reference to Related Application

[001] This application claims the benefit of priority of United States Provisional Patent Application No. 61/942,088, filed on February 20, 2014. The foregoing application is incorporated herein by reference in its entirety.

BACKGROUND

I. Technical Field

[002] The present disclosure relates generally to vehicle navigation and, more specifically, to systems and methods that fuse radar and visual information to navigate relative to detected objects.

II. Background Information

[003] Various sensors may be employed, whether in a driver assist system or an autonomous vehicle, in order to aid in navigation of the vehicle. Such sensors may include radar units and cameras, among others. These sensors may collect information from the environment of a vehicle and use the collected information to make navigational decisions relative to various objects, hazards, etc. present in the environment of the vehicle. For example, the sensors may collect information associated with objects in a roadway, other vehicles, light poles, guard rails, pedestrians, among others. Information collected from the onboard sensor systems may enable driver assist or autonomous driving systems to recognize objects in a vehicle's environment and take appropriate action to reduce or minimize the risk of collisions.

SUMMARY

[004] Embodiments consistent with the present disclosure provide systems and methods for autonomous vehicle navigation. The disclosed embodiments may use cameras and/or radar to provide autonomous vehicle navigation features.

[005] Consistent with a disclosed embodiment, a navigation system for a vehicle may include at least one image capture device configured to acquire a plurality of images of an environment of a vehicle and a radar sensor to detect an object in the environment of the vehicle and to provide and output indicative of a range and/or range rate between the vehicle and the object. The system may also include at least one processing device programmed to: receive the plurality of images from the at least one image capture device; receive the output from the radar sensor; determine, for each of a plurality of image segments in a first image,

from among the plurality of images, and corresponding image segments in a second image, from among the plurality of images, an indicator of optical flow; determine a value indicative of an expected optical inflation associated with the object in the plurality of images based at least upon range and/or range rate information determined from the output of the radar sensor; determine one or more areas of the second image where the value indicative of an expected optical inflation associated with the object substantially matches the indicator of optical flow; identify a target object region, including at least a subset of the determined one or more areas of the second image; and cause a system response based on the identified target object region.

[006] The disclosed embodiments may also include a vehicle comprising a navigation system. The navigation system may include at least one image capture device configured to acquire a plurality of images of an environment of a vehicle and a radar sensor to detect an object in the environment of the vehicle and to provide and output indicative of a range and/or range rate between the vehicle and the object. The system may also include at least one processing device programmed to: receive the plurality of images from the at least one image capture device; receive the output from the radar sensor; determine, for each of a plurality of image segments in a first image, from among the plurality of images, and corresponding image segments in a second image, from among the plurality of images, an indicator of optical flow; determine a value indicative of an expected optical inflation associated with the object in the plurality of images based at least upon range and/or range rate information determined from the output of the radar sensor; determine one or more areas of the second image where the value indicative of an expected optical inflation associated with the object substantially matches the indicator of optical flow; identify a target object region, including at least a subset of the determined one or more areas of the second image; and cause a system response based on the identified target object region.

[007] The disclosed embodiments may also include a method for navigating a vehicle based on radar detection and visual image data. The method may include acquiring a plurality of images of an environment of the vehicle; detecting an object in the environment of the vehicle using a radar sensor and providing an output of the radar sensor indicative of a range and/or range rate between the object and the vehicle; receiving at one or more processing devices the plurality of images from the at least one image capture device and the output from the radar sensor; determining an indicator of optical flow, for each of a plurality of image segments in a first image, from among the plurality of images, and corresponding image segments in a second image, from among the plurality of images; identifying a target

object region having a substantially common focus of expansion, based on range information provided by the radar sensor and the determined indicators of optical flow; and causing a system response based on the identified target object region.

[008] The disclosed embodiments may include a navigation system for a vehicle. The system may include at least one image capture device configured to acquire a plurality of images of an environment of a vehicle; a radar sensor to detect an object in the environment of the vehicle and to provide and output indicative of a range and/or range rate between the vehicle and the object; and at least one processing device. The at least one processing device may be programmed to receive the plurality of images from the at least one image capture device; receive the output from the radar sensor; determine, for each of a plurality of image segments in a first image, from among the plurality of images, and corresponding image segments in a second image, from among the plurality of images, an indicator of optical flow; identify a target object region having a substantially common focus of expansion, based on range and/or range rate information provided by the radar sensor and the determined indicators of optical flow; and cause a system response based on the identified target object region.

[009] Consistent with other disclosed embodiments, non-transitory computer-readable storage media may store program instructions, which are executed by at least one processing device and perform any of the methods described herein.

[010] The foregoing general description and the following detailed description are exemplary and explanatory only and are not restrictive of the claims.

BRIEF DESCRIPTION OF THE DRAWINGS

[011] The accompanying drawings, which are incorporated in and constitute a part of this disclosure, illustrate various disclosed embodiments. In the drawings:

[012] FIG. 1 is a diagrammatic representation of an exemplary system consistent with the disclosed embodiments.

[013] FIG. 2A is a diagrammatic side view representation of an exemplary vehicle including a system consistent with the disclosed embodiments.

[014] FIG. 2B is a diagrammatic top view representation of the vehicle and system shown in FIG. 2A consistent with the disclosed embodiments.

[015] FIG. 2C is a diagrammatic top view representation of another embodiment of a vehicle including a system consistent with the disclosed embodiments.

[016] FIG. 2D is a diagrammatic top view representation of yet another embodiment of a vehicle including a system consistent with the disclosed embodiments.

[017] FIG. 2E is a diagrammatic top view representation of yet another embodiment of a vehicle including a system consistent with the disclosed embodiments.

[018] FIG. 2F is a diagrammatic representation of exemplary vehicle control systems consistent with the disclosed embodiments.

[019] FIG. 3A is a diagrammatic representation of an interior of a vehicle including a rearview mirror and a user interface for a vehicle imaging system consistent with the disclosed embodiments.

[020] FIG. 3B is an illustration of an example of a camera mount that is configured to be positioned behind a rearview mirror and against a vehicle windshield consistent with the disclosed embodiments.

[021] FIG. 3C is an illustration of the camera mount shown in FIG. 3B from a different perspective consistent with the disclosed embodiments.

[022] FIG. 3D is an illustration of an example of a camera mount that is configured to be positioned behind a rearview mirror and against a vehicle windshield consistent with the disclosed embodiments.

[023] FIG. 4 is an exemplary block diagram of a memory configured to store instructions for performing one or more operations consistent with the disclosed embodiments.

[024] FIG. 5A is a flowchart showing an exemplary process for causing one or more navigational responses based on monocular image analysis consistent with disclosed embodiments.

[025] FIG. 5B is a flowchart showing an exemplary process for detecting one or more vehicles and/or pedestrians in a set of images consistent with the disclosed embodiments.

[026] FIG. 5C is a flowchart showing an exemplary process for detecting road marks and/or lane geometry information in a set of images consistent with the disclosed embodiments.

[027] FIG. 5D is a flowchart showing an exemplary process for detecting traffic lights in a set of images consistent with the disclosed embodiments.

[028] FIG. 5E is a flowchart showing an exemplary process for causing one or more navigational responses based on a vehicle path consistent with the disclosed embodiments.

[029] FIG. 5F is a flowchart showing an exemplary process for determining whether a leading vehicle is changing lanes consistent with the disclosed embodiments.

[030] FIG. 6 is a flowchart showing an exemplary process for causing one or more navigational responses based on stereo image analysis consistent with the disclosed embodiments.

[031] FIG. 7 is a flowchart showing an exemplary process for causing one or more navigational responses based on an analysis of three sets of images consistent with the disclosed embodiments.

[032] FIG. 8 is a diagrammatic representation of an exemplary system consistent with the disclosed embodiments.

[033] FIG. 9A is a diagrammatic side view representation of an exemplary vehicle including a system consistent with the disclosed embodiments.

[034] FIG. 9B is a diagrammatic top view representation of the vehicle and system shown in FIG. 9A consistent with the disclosed embodiments.

[035] FIG. 9C is a diagrammatic top view representation of another embodiment of a vehicle including a system consistent with the disclosed embodiments.

[036] FIG. 9D is a diagrammatic top view representation of yet another embodiment of a vehicle including a system consistent with the disclosed embodiments.

[037] FIG. 9E is a diagrammatic top view representation of yet another embodiment of a vehicle including a system consistent with the disclosed embodiments.

[038] FIG. 10 is a diagrammatic representation of an environment in which a vehicle may travel.

[039] FIG. 11A represents an image of an object within an environment of the vehicle.

[040] FIG. 11B represents another image of the object within an environment of the vehicle, from which optical flow may be determined relative to the image of FIG. 11A.

[041] FIG. 12A represents a horizontal optical flow map relative to the object of FIG. 11A.

[042] FIG. 12B represents a vertical optical flow map relative to the object of FIG. 11A.

[043] FIG. 13 represents a target object region derived from optical flow information and radar range information according to exemplary disclosed embodiments.

DETAILED DESCRIPTION

[044] The following detailed description refers to the accompanying drawings. Wherever possible, the same reference numbers are used in the drawings and the following description to refer to the same or similar parts. While several illustrative embodiments are

described herein, modifications, adaptations and other implementations are possible. For example, substitutions, additions or modifications may be made to the components illustrated in the drawings, and the illustrative methods described herein may be modified by substituting, reordering, removing, or adding steps to the disclosed methods. Accordingly, the following detailed description is not limited to the disclosed embodiments and examples. Instead, the proper scope is defined by the appended claims.

[045] FIG. 1 is a block diagram representation of a system 100 consistent with the exemplary disclosed embodiments. System 100 may include various components depending on the requirements of a particular implementation. In some embodiments, system 100 may include a processing unit 110, an image acquisition unit 120, a position sensor 130, one or more memory units 140, 150, a map database 160, and a user interface 170. Processing unit 110 may include one or more processing devices. In some embodiments, processing unit 110 may include an applications processor 180, an image processor 190, or any other suitable processing device. Similarly, image acquisition unit 120 may include any number of image acquisition devices and components depending on the requirements of a particular application. In some embodiments, image acquisition unit 120 may include one or more image capture devices (e.g., cameras), such as image capture device 122, image capture device 124, and image capture device 126. System 100 may also include a data interface 128 communicatively connecting processing device 110 to image acquisition device 120. For example, data interface 128 may include any wired and/or wireless link or links for transmitting image data acquired by image accusation device 120 to processing unit 110.

[046] Both applications processor 180 and image processor 190 may include various types of processing devices. For example, either or both of applications processor 180 and image processor 190 may include a microprocessor, preprocessors (such as an image preprocessor), graphics processors, a central processing unit (CPU), support circuits, digital signal processors, integrated circuits, memory, or any other types of devices suitable for running applications and for image processing and analysis. In some embodiments, applications processor 180 and/or image processor 190 may include any type of single or multi-core processor, mobile device microcontroller, central processing unit, etc. Various processing devices may be used, including, for example, processors available from manufacturers such as Intel®, AMD®, etc. and may include various architectures (e.g., x86 processor, ARM®, etc.).

[047] In some embodiments, applications processor 180 and/or image processor 190 may include any of the EyeQ series of processor chips available from Mobileye®. These

processor designs each include multiple processing units with local memory and instruction sets. Such processors may include video inputs for receiving image data from multiple image sensors and may also include video out capabilities. In one example, the EyeQ2® uses 90nm-micron technology operating at 332Mhz. The EyeQ2® architecture consists of two floating point, hyper-thread 32-bit RISC CPUs (MIPS32® 34K® cores), five Vision Computing Engines (VCE), three Vector Microcode Processors (VMP®), Denali 64-bit Mobile DDR Controller, 128-bit internal Sonics Interconnect, dual 16-bit Video input and 18-bit Video output controllers, 16 channels DMA and several peripherals. The MIPS34K CPU manages the five VCEs, three VMP™ and the DMA, the second MIPS34K CPU and the multi-channel DMA as well as the other peripherals. The five VCEs, three VMP® and the MIPS34K CPU can perform intensive vision computations required by multi-function bundle applications. In another example, the EyeQ3®, which is a third generation processor and is six times more powerful that the EyeQ2®, may be used in the disclosed embodiments.

[048] Any of the processing devices disclosed herein may be configured to perform certain functions. Configuring a processing device, such as any of the described EyeQ processors or other controller or microprocessor, to perform certain functions may include programming of computer executable instructions and making those instructions available to the processing device for execution during operation of the processing device. In some embodiments, configuring a processing device may include programming the processing device directly with architectural instructions. In other embodiments, configuring a processing device may include storing executable instructions on a memory that is accessible to the processing device during operation. For example, the processing device may access the memory to obtain and execute the stored instructions during operation.

[049] While FIG. 1 depicts two separate processing devices included in processing unit 110, more or fewer processing devices may be used. For example, in some embodiments, a single processing device may be used to accomplish the tasks of applications processor 180 and image processor 190. In other embodiments, these tasks may be performed by more than two processing devices.

[050] Processing unit 110 may comprise various types of devices. For example, processing unit 110 may include various devices, such as a controller, an image preprocessor, a central processing unit (CPU), support circuits, digital signal processors, integrated circuits, memory, or any other types of devices for image processing and analysis. The image preprocessor may include a video processor for capturing, digitizing and processing the imagery from the image sensors. The CPU may comprise any number of microcontrollers or

microprocessors. The support circuits may be any number of circuits generally well known in the art, including cache, power supply, clock and input-output circuits. The memory may store software that, when executed by the processor, controls the operation of the system. The memory may include databases and image processing software. The memory may comprise any number of random access memories, read only memories, flash memories, disk drives, optical storage, tape storage, removable storage and other types of storage. In one instance, the memory may be separate from the processing unit 110. In another instance, the memory may be integrated into the processing unit 110.

[051] Each memory 140, 150 may include software instructions that when executed by a processor (e.g., applications processor 180 and/or image processor 190), may control operation of various aspects of system 100. These memory units may include various databases and image processing software. The memory units may include random access memory, read only memory, flash memory, disk drives, optical storage, tape storage, removable storage and/or any other types of storage. In some embodiments, memory units 140, 150 may be separate from the applications processor 180 and/or image processor 190. In other embodiments, these memory units may be integrated into applications processor 180 and/or image processor 190.

[052] Position sensor 130 may include any type of device suitable for determining a location associated with at least one component of system 100. In some embodiments, position sensor 130 may include a GPS receiver. Such receivers can determine a user position and velocity by processing signals broadcasted by global positioning system satellites. Position information from position sensor 130 may be made available to applications processor 180 and/or image processor 190.

[053] User interface 170 may include any device suitable for providing information to or for receiving inputs from one or more users of system 100. In some embodiments, user interface 170 may include user input devices, including, for example, a touchscreen, microphone, keyboard, pointer devices, track wheels, cameras, knobs, buttons, etc. With such input devices, a user may be able to provide information inputs or commands to system 100 by typing instructions or information, providing voice commands, selecting menu options on a screen using buttons, pointers, or eye-tracking capabilities, or through any other suitable techniques for communicating information to system 100.

[054] User interface 170 may be equipped with one or more processing devices configured to provide and receive information to or from a user and process that information for use by, for example, applications processor 180. In some embodiments, such processing

devices may execute instructions for recognizing and tracking eye movements, receiving and interpreting voice commands, recognizing and interpreting touches and/or gestures made on a touchscreen, responding to keyboard entries or menu selections, etc. In some embodiments, user interface 170 may include a display, speaker, tactile device, and/or any other devices for providing output information to a user.

[055] Map database 160 may include any type of database for storing map data useful to system 100. In some embodiments, map database 160 may include data relating to the position, in a reference coordinate system, of various items, including roads, water features, geographic features, businesses, points of interest, restaurants, gas stations, etc. Map database 160 may store not only the locations of such items, but also descriptors relating to those items, including, for example, names associated with any of the stored features. In some embodiments, map database 160 may be physically located with other components of system 100. Alternatively or additionally, map database 160 or a portion thereof may be located remotely with respect to other components of system 100 (e.g., processing unit 110). In such embodiments, information from map database 160 may be downloaded over a wired or wireless data connection to a network (e.g., over a cellular network and/or the Internet, etc.).

[056] Image capture devices 122, 124, and 126 may each include any type of device suitable for capturing at least one image from an environment. Moreover, any number of image capture devices may be used to acquire images for input to the image processor. Some embodiments may include only a single image capture device, while other embodiments may include two, three, or even four or more image capture devices. Image capture devices 122, 124, and 126 will be further described with reference to FIGS. 2B-2E, below.

[057] System 100, or various components thereof, may be incorporated into various different platforms. In some embodiments, system 100 may be included on a vehicle 200, as shown in FIG. 2A. For example, vehicle 200 may be equipped with a processing unit 110 and any of the other components of system 100, as described above relative to FIG. 1. While in some embodiments vehicle 200 may be equipped with only a single image capture device (e.g., camera), in other embodiments, such as those discussed in connection with FIGS. 2B-2E, multiple image capture devices may be used. For example, either of image capture devices 122 and 124 of vehicle 200, as shown in FIG. 2A, may be part of an ADAS (Advanced Driver Assistance Systems) imaging set.

[058] The image capture devices included on vehicle 200 as part of the image acquisition unit 120 may be positioned at any suitable location. In some embodiments, as shown in FIGS. 2A-2E and 3A-3C, image capture device 122 may be located in the vicinity

of the rearview mirror. This position may provide a line of sight similar to that of the driver of vehicle 200, which may aid in determining what is and is not visible to the driver. Image capture device 122 may be positioned at any location near the rearview mirror, but placing image capture device 122 on the driver side of the mirror may further aid in obtaining images representative of the driver's field of view and/or line of sight.

[059] Other locations for the image capture devices of image acquisition unit 120 may also be used. For example, image capture device 124 may be located on or in a bumper of vehicle 200. Such a location may be especially suitable for image capture devices having a wide field of view. The line of sight of bumper-located image capture devices can be different from that of the driver and, therefore, the bumper image capture device and driver may not always see the same objects. The image capture devices (e.g., image capture devices 122, 124, and 126) may also be located in other locations. For example, the image capture devices may be located on or in one or both of the side mirrors of vehicle 200, on the roof of vehicle 200, on the hood of vehicle 200, on the trunk of vehicle 200, on the sides of vehicle 200, mounted on, positioned behind, or positioned in front of any of the windows of vehicle 200, and mounted in or near light figures on the front and/or back of vehicle 200, etc.

[060] In addition to image capture devices, vehicle 200 may include various other components of system 100. For example, processing unit 110 may be included on vehicle 200 either integrated with or separate from an engine control unit (ECU) of the vehicle. Vehicle 200 may also be equipped with a position sensor 130, such as a GPS receiver and may also include a map database 160 and memory units 140 and 150.

[061] FIG. 2A is a diagrammatic side view representation of an exemplary vehicle imaging system consistent with the disclosed embodiments. FIG. 2B is a diagrammatic top view illustration of the embodiment shown in FIG. 2A. As illustrated in FIG. 2B, the disclosed embodiments may include a vehicle 200 including in its body a system 100 with a first image capture device 122 positioned in the vicinity of the rearview mirror and/or near the driver of vehicle 200, a second image capture device 124 positioned on or in a bumper region (e.g., one of bumper regions 210) of vehicle 200, and a processing unit 110.

[062] As illustrated in FIG. 2C, image capture devices 122 and 124 may both be positioned in the vicinity of the rearview mirror and/or near the driver of vehicle 200. Additionally, while two image capture devices 122 and 124 are shown in FIGS. 2B and 2C, it should be understood that other embodiments may include more than two image capture devices. For example, in the embodiments shown in FIGS. 2D and 2E, first, second, and third image capture devices 122, 124, and 126, are included in the system 100 of vehicle 200.

[063] As illustrated in FIG. 2D, image capture device 122 may be positioned in the vicinity of the rearview mirror and/or near the driver of vehicle 200, and image capture devices 124 and 126 may be positioned on or in a bumper region (e.g., one of bumper regions 210) of vehicle 200. And as shown in FIG. 2E, image capture devices 122, 124, and 126 may be positioned in the vicinity of the rearview mirror and/or near the driver seat of vehicle 200. The disclosed embodiments are not limited to any particular number and configuration of the image capture devices, and the image capture devices may be positioned in any appropriate location within and/or on vehicle 200.

[064] It is to be understood that the disclosed embodiments are not limited to vehicles and could be applied in other contexts. It is also to be understood that disclosed embodiments are not limited to a particular type of vehicle 200 and may be applicable to all types of vehicles including automobiles, trucks, trailers, and other types of vehicles.

[065] The first image capture device 122 may include any suitable type of image capture device. Image capture device 122 may include an optical axis. In one instance, the image capture device 122 may include an Aptina M9V024 WVGA sensor with a global shutter. In other embodiments, image capture device 122 may provide a resolution of 1280x960 pixels and may include a rolling shutter. Image capture device 122 may include various optical elements. In some embodiments one or more lenses may be included, for example, to provide a desired focal length and field of view for the image capture device. In some embodiments, image capture device 122 may be associated with a 6mm lens or a 12mm lens. In some embodiments, image capture device 122 may be configured to capture images having a desired field-of-view (FOV) 202, as illustrated in FIG. 2D. For example, image capture device 122 may be configured to have a regular FOV, such as within a range of 40 degrees to 56 degrees, including a 46 degree FOV, 50 degree FOV, 52 degree FOV, or greater. Alternatively, image capture device 122 may be configured to have a narrow FOV in the range of 23 to 40 degrees, such as a 28 degree FOV or 36 degree FOV. In addition, image capture device 122 may be configured to have a wide FOV in the range of 100 to 180 degrees. In some embodiments, image capture device 122 may include a wide angle bumper camera or one with up to a 180 degree FOV.

[066] The first image capture device 122 may acquire a plurality of first images relative to a scene associated with the vehicle 200. Each of the plurality of first images may be acquired as a series of image scan lines, which may be captured using a rolling shutter. Each scan line may include a plurality of pixels.

[067] The first image capture device 122 may have a scan rate associated with acquisition of each of the first series of image scan lines. The scan rate may refer to a rate at which an image sensor can acquire image data associated with each pixel included in a particular scan line.

[068] Image capture devices 122, 124, and 126 may contain any suitable type and number of image sensors, including CCD sensors or CMOS sensors, for example. In one embodiment, a CMOS image sensor may be employed along with a rolling shutter, such that each pixel in a row is read one at a time, and scanning of the rows proceeds on a row-by-row basis until an entire image frame has been captured. In some embodiments, the rows may be captured sequentially from top to bottom relative to the frame.

[069] The use of a rolling shutter may result in pixels in different rows being exposed and captured at different times, which may cause skew and other image artifacts in the captured image frame. On the other hand, when the image capture device 122 is configured to operate with a global or synchronous shutter, all of the pixels may be exposed for the same amount of time and during a common exposure period. As a result, the image data in a frame collected from a system employing a global shutter represents a snapshot of the entire FOV (such as FOV 202) at a particular time. In contrast, in a rolling shutter application, each row in a frame is exposed and data is capture at different times. Thus, moving objects may appear distorted in an image capture device having a rolling shutter. This phenomenon will be described in greater detail below.

[070] The second image capture device 124 and the third image capturing device 126 may be any type of image capture device. Like the first image capture device 122, each of image capture devices 124 and 126 may include an optical axis. In one embodiment, each of image capture devices 124 and 126 may include an Aptina M9V024 WVGA sensor with a global shutter. Alternatively, each of image capture devices 124 and 126 may include a rolling shutter. Like image capture device 122, image capture devices 124 and 126 may be configured to include various lenses and optical elements. In some embodiments, lenses associated with image capture devices 124 and 126 may provide FOVs (such as FOVs 204 and 206) that are the same as, or narrower than, a FOV (such as FOV 202) associated with image capture device 122. For example, image capture devices 124 and 126 may have FOVs of 40 degrees, 30 degrees, 26 degrees, 23 degrees, 20 degrees, or less.

[071] Image capture devices 124 and 126 may acquire a plurality of second and third images relative to a scene associated with the vehicle 200. Each of the plurality of second and third images may be acquired as a second and third series of image scan lines, which may be

captured using a rolling shutter. Each scan line or row may have a plurality of pixels. Image capture devices 124 and 126 may have second and third scan rates associated with acquisition of each of image scan lines included in the second and third series.

[072] Each image capture device 122, 124, and 126 may be positioned at any suitable position and orientation relative to vehicle 200. The relative positioning of the image capture devices 122, 124, and 126 may be selected to aid in fusing together the information acquired from the image capture devices. For example, in some embodiments, a FOV (such as FOV 204) associated with image capture device 124 may overlap partially or fully with a FOV (such as FOV 202) associated with image capture device 122 and a FOV (such as FOV 206) associated with image capture device 126.

[073] Image capture devices 122, 124, and 126 may be located on vehicle 200 at any suitable relative heights. In one instance, there may be a height difference between the image capture devices 122, 124, and 126, which may provide sufficient parallax information to enable stereo analysis. For example, as shown in FIG. 2A, the two image capture devices 122 and 124 are at different heights. There may also be a lateral displacement difference between image capture devices 122, 124, and 126, giving additional parallax information for stereo analysis by processing unit 110, for example. The difference in the lateral displacement may be denoted by d_x, as shown in FIGS. 2C and 2D. In some embodiments, fore or aft displacement (e.g., range displacement) may exist between image capture devices 122, 124, and 126. For example, image capture device 122 may be located 0.5 to 2 meters or more behind image capture device 124 and/or image capture device 126. This type of displacement may enable one of the image capture devices to cover potential blind spots of the other image capture device(s).

[074] Image capture devices 122 may have any suitable resolution capability (e.g., number of pixels associated with the image sensor), and the resolution of the image sensor(s) associated with the image capture device 122 may be higher, lower, or the same as the resolution of the image sensor(s) associated with image capture devices 124 and 126. In some embodiments, the image sensor(s) associated with image capture device 122 and/or image capture devices 124 and 126 may have a resolution of 640 x 480, 1024 x 768, 1280 x 960, or any other suitable resolution.

[075] The frame rate (e.g., the rate at which an image capture device acquires a set of pixel data of one image frame before moving on to capture pixel data associated with the next image frame) may be controllable. The frame rate associated with image capture device 122 may be higher, lower, or the same as the frame rate associated with image capture

devices 124 and 126. The frame rate associated with image capture devices 122, 124, and 126 may depend on a variety of factors that may affect the timing of the frame rate. For example, one or more of image capture devices 122, 124, and 126 may include a selectable pixel delay period imposed before or after acquisition of image data associated with one or more pixels of an image sensor in image capture device 122, 124, and/or 126. Generally, image data corresponding to each pixel may be acquired according to a clock rate for the device (e.g., one pixel per clock cycle). Additionally, in embodiments including a rolling shutter, one or more of image capture devices 122, 124, and 126 may include a selectable horizontal blanking period imposed before or after acquisition of image data associated with a row of pixels of an image sensor in image capture device 122, 124, and/or 126. Further, one or more of image capture devices 122, 124, and/or 126 may include a selectable vertical blanking period imposed before or after acquisition of image data associated with an image frame of image capture device 122, 124, and 126.

[076] These timing controls may enable synchronization of frame rates associated with image capture devices 122, 124, and 126, even where the line scan rates of each are different. Additionally, as will be discussed in greater detail below, these selectable timing controls, among other factors (e.g., image sensor resolution, maximum line scan rates, etc.) may enable synchronization of image capture from an area where the FOV of image capture device 122 overlaps with one or more FOVs of image capture devices 124 and 126, even where the field of view of image capture device 122 is different from the FOVs of image capture devices 124 and 126.

[077] Frame rate timing in image capture device 122, 124, and 126 may depend on the resolution of the associated image sensors. For example, assuming similar line scan rates for both devices, if one device includes an image sensor having a resolution of 640 x 480 and another device includes an image sensor with a resolution of 1280 x 960, then more time will be required to acquire a frame of image data from the sensor having the higher resolution.

[078] Another factor that may affect the timing of image data acquisition in image capture devices 122, 124, and 126 is the maximum line scan rate. For example, acquisition of a row of image data from an image sensor included in image capture device 122, 124, and 126 will require some minimum amount of time. Assuming no pixel delay periods are added, this minimum amount of time for acquisition of a row of image data will be related to the maximum line scan rate for a particular device. Devices that offer higher maximum line scan rates have the potential to provide higher frame rates than devices with lower maximum line scan rates. In some embodiments, one or more of image capture devices 124 and 126 may

have a maximum line scan rate that is higher than a maximum line scan rate associated with image capture device 122. In some embodiments, the maximum line scan rate of image capture device 124 and/or 126 may be 1.25, 1.5, 1.75, or 2 times or more than a maximum line scan rate of image capture device 122.

[079] In another embodiment, image capture devices 122, 124, and 126 may have the same maximum line scan rate, but image capture device 122 may be operated at a scan rate less than or equal to its maximum scan rate. The system may be configured such that one or more of image capture devices 124 and 126 operate at a line scan rate that is equal to the line scan rate of image capture device 122. In other instances, the system may be configured such that the line scan rate of image capture device 124 and/or image capture device 126 may be 1.25, 1.5, 1.75, or 2 times or more than the line scan rate of image capture device 122.

[080] In some embodiments, image capture devices 122, 124, and 126 may be asymmetric. That is, they may include cameras having different fields of view (FOV) and focal lengths. The fields of view of image capture devices 122, 124, and 126 may include any desired area relative to an environment of vehicle 200, for example. In some embodiments, one or more of image capture devices 122, 124, and 126 may be configured to acquire image data from an environment in front of vehicle 200, behind vehicle 200, to the sides of vehicle 200, or combinations thereof.

[081] Further, the focal length associated with each image capture device 122, 124, and/or 126 may be selectable (e.g., by inclusion of appropriate lenses etc.) such that each device acquires images of objects at a desired distance range relative to vehicle 200. For example, in some embodiments image capture devices 122, 124, and 126 may acquire images of close-up objects within a few meters from the vehicle. Image capture devices 122, 124, and 126 may also be configured to acquire images of objects at ranges more distant from the vehicle (e.g., 25 m, 50 m, 100 m, 150 m, or more). Further, the focal lengths of image capture devices 122, 124, and 126 may be selected such that one image capture device (e.g., image capture device 122) can acquire images of objects relatively close to the vehicle (e.g., within 10 m or within 20 m) while the other image capture devices (e.g., image capture devices 124 and 126) can acquire images of more distant objects (e.g., greater than 20 m, 50 m, 100 m, 150 m, etc.) from vehicle 200.

[082] According to some embodiments, the FOV of one or more image capture devices 122, 124, and 126 may have a wide angle. For example, it may be advantageous to have a FOV of 140 degrees, especially for image capture devices 122, 124, and 126 that may be used to capture images of the area in the vicinity of vehicle 200. For example, image

capture device 122 may be used to capture images of the area to the right or left of vehicle 200 and, in such embodiments, it may be desirable for image capture device 122 to have a wide FOV (e.g., at least 140 degrees).

[083] The field of view associated with each of image capture devices 122, 124, and 126 may depend on the respective focal lengths. For example, as the focal length increases, the corresponding field of view decreases.

[084] Image capture devices 122, 124, and 126 may be configured to have any suitable fields of view. In one particular example, image capture device 122 may have a horizontal FOV of 46 degrees, image capture device 124 may have a horizontal FOV of 23 degrees, and image capture device 126 may have a horizontal FOV in between 23 and 46 degrees. In another instance, image capture device 122 may have a horizontal FOV of 52 degrees, image capture device 124 may have a horizontal FOV of 26 degrees, and image capture device 126 may have a horizontal FOV in between 26 and 52 degrees. In some embodiments, a ratio of the FOV of image capture device 122 to the FOVs of image capture device 124 and/or image capture device 126 may vary from 1.5 to 2.0. In other embodiments, this ratio may vary between 1.25 and 2.25.

[085] System 100 may be configured so that a field of view of image capture device 122 overlaps, at least partially or fully, with a field of view of image capture device 124 and/or image capture device 126. In some embodiments, system 100 may be configured such that the fields of view of image capture devices 124 and 126, for example, fall within (e.g., are narrower than) and share a common center with the field of view of image capture device 122. In other embodiments, the image capture devices 122, 124, and 126 may capture adjacent FOVs or may have partial overlap in their FOVs. In some embodiments, the fields of view of image capture devices 122, 124, and 126 may be aligned such that a center of the narrower FOV image capture devices 124 and/or 126 may be located in a lower half of the field of view of the wider FOV device 122.

[086] FIG. 2F is a diagrammatic representation of exemplary vehicle control systems, consistent with the disclosed embodiments. As indicated in FIG. 2F, vehicle 200 may include throttling system 220, braking system 230, and steering system 240. System 100 may provide inputs (e.g., control signals) to one or more of throttling system 220, braking system 230, and steering system 240 over one or more data links (e.g., any wired and/or wireless link or links for transmitting data). For example, based on analysis of images acquired by image capture devices 122, 124, and/or 126, system 100 may provide control signals to one or more of throttling system 220, braking system 230, and steering system 240

to navigate vehicle 200 (e.g., by causing an acceleration, a turn, a lane shift, etc.). Further, system 100 may receive inputs from one or more of throttling system 220, braking system 230, and steering system 24 indicating operating conditions of vehicle 200 (e.g., speed, whether vehicle 200 is braking and/or turning, etc.). Further details are provided in connection with FIGS. 4-7, below.

[087] As shown in FIG. 3A, vehicle 200 may also include a user interface 170 for interacting with a driver or a passenger of vehicle 200. For example, user interface 170 in a vehicle application may include a touch screen 320, knobs 330, buttons 340, and a microphone 350. A driver or passenger of vehicle 200 may also use handles (e.g., located on or near the steering column of vehicle 200 including, for example, turn signal handles), buttons (e.g., located on the steering wheel of vehicle 200), and the like, to interact with system 100. In some embodiments, microphone 350 may be positioned adjacent to a rearview mirror 310. Similarly, in some embodiments, image capture device 122 may be located near rearview mirror 310. In some embodiments, user interface 170 may also include one or more speakers 360 (e.g., speakers of a vehicle audio system). For example, system 100 may provide various notifications (e.g., alerts) via speakers 360.

[088] FIGS. 3B-3D are illustrations of an exemplary camera mount 370 configured to be positioned behind a rearview mirror (e.g., rearview mirror 310) and against a vehicle windshield, consistent with disclosed embodiments. As shown in FIG. 3B, camera mount 370 may include image capture devices 122, 124, and 126. Image capture devices 124 and 126 may be positioned behind a glare shield 380, which may be flush against the vehicle windshield and include a composition of film and/or anti-reflective materials. For example, glare shield 380 may be positioned such that it aligns against a vehicle windshield having a matching slope. In some embodiments, each of image capture devices 122, 124, and 126 may be positioned behind glare shield 380, as depicted, for example, in FIG. 3D. The disclosed embodiments are not limited to any particular configuration of image capture devices 122, 124, and 126, camera mount 370, and glare shield 380. FIG. 3C is an illustration of camera mount 370 shown in FIG. 3B from a front perspective.

[089] As will be appreciated by a person skilled in the art having the benefit of this disclosure, numerous variations and/or modifications may be made to the foregoing disclosed embodiments. For example, not all components are essential for the operation of system 100. Further, any component may be located in any appropriate part of system 100 and the components may be rearranged into a variety of configurations while providing the functionality of the disclosed embodiments. Therefore, the foregoing configurations are

examples and, regardless of the configurations discussed above, system 100 can provide a wide range of functionality to analyze the surroundings of vehicle 200 and navigate vehicle 200 in response to the analysis.

[090] As discussed below in further detail and consistent with various disclosed embodiments, system 100 may provide a variety of features related to autonomous driving and/or driver assist technology. For example, system 100 may analyze image data, position data (e.g., GPS location information), map data, speed data, and/or data from sensors included in vehicle 200. System 100 may collect the data for analysis from, for example, image acquisition unit 120, position sensor 130, and other sensors. Further, system 100 may analyze the collected data to determine whether or not vehicle 200 should take a certain action, and then automatically take the determined action without human intervention. For example, when vehicle 200 navigates without human intervention, system 100 may automatically control the braking, acceleration, and/or steering of vehicle 200 (e.g., by sending control signals to one or more of throttling system 220, braking system 230, and steering system 240). Further, system 100 may analyze the collected data and issue warnings and/or alerts to vehicle occupants based on the analysis of the collected data. Additional details regarding the various embodiments that are provided by system 100 are provided below.

[091] Forward-Facing Multi-Imaging System

[092] As discussed above, system 100 may provide drive assist functionality that uses a multi-camera system. The multi-camera system may use one or more cameras facing in the forward direction of a vehicle. In other embodiments, the multi-camera system may include one or more cameras facing to the side of a vehicle or to the rear of the vehicle. In one embodiment, for example, system 100 may use a two-camera imaging system, where a first camera and a second camera (e.g., image capture devices 122 and 124) may be positioned at the front and/or the sides of a vehicle (e.g., vehicle 200). The first camera may have a field of view that is greater than, less than, or partially overlapping with, the field of view of the second camera. In addition, the first camera may be connected to a first image processor to perform monocular image analysis of images provided by the first camera, and the second camera may be connected to a second image processor to perform monocular image analysis of images provided by the second camera. The outputs (e.g., processed information) of the first and second image processors may be combined. In some embodiments, the second image processor may receive images from both the first camera and second camera to perform stereo analysis. In another embodiment, system 100 may use a

three-camera imaging system where each of the cameras has a different field of view. Such a system may, therefore, make decisions based on information derived from objects located at varying distances both forward and to the sides of the vehicle. References to monocular image analysis may refer to instances where image analysis is performed based on images captured from a single point of view (e.g., from a single camera). Stereo image analysis may refer to instances where image analysis is performed based on two or more images captured with one or more variations of an image capture parameter. For example, captured images suitable for performing stereo image analysis may include images captured: from two or more different positions, from different fields of view, using different focal lengths, along with parallax information, etc.

[093] For example, in one embodiment, system 100 may implement a three camera configuration using image capture devices 122-126. In such a configuration, image capture device 122 may provide a narrow field of view (e.g., 34 degrees, or other values selected from a range of about 20 to 45 degrees, etc.), image capture device 124 may provide a wide field of view (e.g., 150 degrees or other values selected from a range of about 100 to about 180 degrees), and image capture device 126 may provide an intermediate field of view (e.g., 46 degrees or other values selected from a range of about 35 to about 60 degrees). In some embodiments, image capture device 126 may act as a main or primary camera. Image capture devices 122-126 may be positioned behind rearview mirror 310 and positioned substantially side-by-side (e.g., 6 cm apart). Further, in some embodiments, as discussed above, one or more of image capture devices 122-126 may be mounted behind glare shield 380 that is flush with the windshield of vehicle 200. Such shielding may act to minimize the impact of any reflections from inside the car on image capture devices 122-126.

[094] In another embodiment, as discussed above in connection with FIGS. 3B and 3C, the wide field of view camera (e.g., image capture device 124 in the above example) may be mounted lower than the narrow and main field of view cameras (e.g., image devices 122 and 126 in the above example). This configuration may provide a free line of sight from the wide field of view camera. To reduce reflections, the cameras may be mounted close to the windshield of vehicle 200, and may include polarizers on the cameras to damp reflected light.

[095] A three camera system may provide certain performance characteristics. For example, some embodiments may include an ability to validate the detection of objects by one camera based on detection results from another camera. In the three camera configuration discussed above, processing unit 110 may include, for example, three processing devices

(e.g., three EyeQ series of processor chips, as discussed above), with each processing device dedicated to processing images captured by one or more of image capture devices 122-126.

[096] In a three camera system, a first processing device may receive images from both the main camera and the narrow field of view camera, and perform vision processing of the narrow FOV camera to, for example, detect other vehicles, pedestrians, lane marks, traffic signs, traffic lights, and other road objects. Further, the first processing device may calculate a disparity of pixels between the images from the main camera and the narrow camera and create a 3D reconstruction of the environment of vehicle 200. The first processing device may then combine the 3D reconstruction with 3D map data or with 3D information calculated based on information from another camera.

[097] The second processing device may receive images from main camera and perform vision processing to detect other vehicles, pedestrians, lane marks, traffic signs, traffic lights, and other road objects. Additionally, the second processing device may calculate a camera displacement and, based on the displacement, calculate a disparity of pixels between successive images and create a 3D reconstruction of the scene (e.g., a structure from motion). The second processing device may send the structure from motion based 3D reconstruction to the first processing device to be combined with the stereo 3D images.

[098] The third processing device may receive images from the wide FOV camera and process the images to detect vehicles, pedestrians, lane marks, traffic signs, traffic lights, and other road objects. The third processing device may further execute additional processing instructions to analyze images to identify objects moving in the image, such as vehicles changing lanes, pedestrians, etc.

[099] In some embodiments, having streams of image-based information captured and processed independently may provide an opportunity for providing redundancy in the system. Such redundancy may include, for example, using a first image capture device and the images processed from that device to validate and/or supplement information obtained by capturing and processing image information from at least a second image capture device.

[0100] In some embodiments, system 100 may use two image capture devices (e.g., image capture devices 122 and 124) in providing navigation assistance for vehicle 200 and use a third image capture device (e.g., image capture device 126) to provide redundancy and validate the analysis of data received from the other two image capture devices. For example, in such a configuration, image capture devices 122 and 124 may provide images for stereo analysis by system 100 for navigating vehicle 200, while image capture device 126 may

provide images for monocular analysis by system 100 to provide redundancy and validation of information obtained based on images captured from image capture device 122 and/or image capture device 124. That is, image capture device 126 (and a corresponding processing device) may be considered to provide a redundant sub-system for providing a check on the analysis derived from image capture devices 122 and 124 (e.g., to provide an automatic emergency braking (AEB) system).

[0101] One of skill in the art will recognize that the above camera configurations, camera placements, number of cameras, camera locations, etc., are examples only. These components and others described relative to the overall system may be assembled and used in a variety of different configurations without departing from the scope of the disclosed embodiments. Further details regarding usage of a multi-camera system to provide driver assist and/or autonomous vehicle functionality follow below.

[0102] FIG. 4 is an exemplary functional block diagram of memory 140 and/or 150, which may be stored/programmed with instructions for performing one or more operations consistent with the disclosed embodiments. Although the following refers to memory 140, one of skill in the art will recognize that instructions may be stored in memory 140 and/or 150.

[0103] As shown in FIG. 4, memory 140 may store a monocular image analysis module 402, a stereo image analysis module 404, a velocity and acceleration module 406, and a navigational response module 408. The disclosed embodiments are not limited to any particular configuration of memory 140. Further, application processor 180 and/or image processor 190 may execute the instructions stored in any of modules 402-408 included in memory 140. One of skill in the art will understand that references in the following discussions to processing unit 110 may refer to application processor 180 and image processor 190 individually or collectively. Accordingly, steps of any of the following processes may be performed by one or more processing devices.

[0104] In one embodiment, monocular image analysis module 402 may store instructions (such as computer vision software) which, when executed by processing unit 110, performs monocular image analysis of a set of images acquired by one of image capture devices 122, 124, and 126. In some embodiments, processing unit 110 may combine information from a set of images with additional sensory information (e.g., information from radar) to perform the monocular image analysis. As described in connection with FIGS. 5A-5D below, monocular image analysis module 402 may include instructions for detecting a set of features within the set of images, such as lane markings, vehicles, pedestrians, road signs,

highway exit ramps, traffic lights, hazardous objects, and any other feature associated with an environment of a vehicle. Based on the analysis, system 100 (e.g., via processing unit 110) may cause one or more navigational responses in vehicle 200, such as a turn, a lane shift, a change in acceleration, and the like, as discussed below in connection with navigational response module 408.

[0105] In one embodiment, stereo image analysis module 404 may store instructions (such as computer vision software) which, when executed by processing unit 110, performs stereo image analysis of first and second sets of images acquired by a combination of image capture devices selected from any of image capture devices 122, 124, and 126. In some embodiments, processing unit 110 may combine information from the first and second sets of images with additional sensory information (e.g., information from radar) to perform the stereo image analysis. For example, stereo image analysis module 404 may include instructions for performing stereo image analysis based on a first set of images acquired by image capture device 124 and a second set of images acquired by image capture device 126. As described in connection with FIG. 6 below, stereo image analysis module 404 may include instructions for detecting a set of features within the first and second sets of images, such as lane markings, vehicles, pedestrians, road signs, highway exit ramps, traffic lights, hazardous objects, and the like. Based on the analysis, processing unit 110 may cause one or more navigational responses in vehicle 200, such as a turn, a lane shift, a change in acceleration, and the like, as discussed below in connection with navigational response module 408.

[0106] In one embodiment, velocity and acceleration module 406 may store software configured to analyze data received from one or more computing and electromechanical devices in vehicle 200 that are configured to cause a change in velocity and/or acceleration of vehicle 200. For example, processing unit 110 may execute instructions associated with velocity and acceleration module 406 to calculate a target speed for vehicle 200 based on data derived from execution of monocular image analysis module 402 and/or stereo image analysis module 404. Such data may include, for example, a target position, velocity, and/or acceleration, the position and/or speed of vehicle 200 relative to a nearby vehicle, pedestrian, or road object, position information for vehicle 200 relative to lane markings of the road, and the like. In addition, processing unit 110 may calculate a target speed for vehicle 200 based on sensory input (e.g., information from radar) and input from other systems of vehicle 200, such as throttling system 220, braking system 230, and/or steering system 240 of vehicle 200. Based on the calculated target speed, processing unit 110 may transmit electronic signals to

throttling system 220, braking system 230, and/or steering system 240 of vehicle 200 to trigger a change in velocity and/or acceleration by, for example, physically depressing the brake or easing up off the accelerator of vehicle 200.

[0107] In one embodiment, navigational response module 408 may store software executable by processing unit 110 to determine a desired navigational response based on data derived from execution of monocular image analysis module 402 and/or stereo image analysis module 404. Such data may include position and speed information associated with nearby vehicles, pedestrians, and road objects, target position information for vehicle 200, and the like. Additionally, in some embodiments, the navigational response may be based (partially or fully) on map data, a predetermined position of vehicle 200, and/or a relative velocity or a relative acceleration between vehicle 200 and one or more objects detected from execution of monocular image analysis module 402 and/or stereo image analysis module 404. Navigational response module 408 may also determine a desired navigational response based on sensory input (e.g., information from radar) and inputs from other systems of vehicle 200, such as throttling system 220, braking system 230, and steering system 240 of vehicle 200. Based on the desired navigational response, processing unit 110 may transmit electronic signals to throttling system 220, braking system 230, and steering system 240 of vehicle 200 to trigger a desired navigational response by, for example, turning the steering wheel of vehicle 200 to achieve a rotation of a predetermined angle. In some embodiments, processing unit 110 may use the output of navigational response module 408 (e.g., the desired navigational response) as an input to execution of velocity and acceleration module 406 for calculating a change in speed of vehicle 200.

[0108] FIG. 5A is a flowchart showing an exemplary process 500A for causing one or more navigational responses based on monocular image analysis, consistent with disclosed embodiments. At step 510, processing unit 110 may receive a plurality of images via data interface 128 between processing unit 110 and image acquisition unit 120. For instance, a camera included in image acquisition unit 120 (such as image capture device 122 having field of view 202) may capture a plurality of images of an area forward of vehicle 200 (or to the sides or rear of a vehicle, for example) and transmit them over a data connection (e.g., digital, wired, USB, wireless, Bluetooth, etc.) to processing unit 110. Processing unit 110 may execute monocular image analysis module 402 to analyze the plurality of images at step 520, as described in further detail in connection with FIGS. 5B-5D below. By performing the analysis, processing unit 110 may detect a set of features within the set of images, such as

lane markings, vehicles, pedestrians, road signs, highway exit ramps, traffic lights, and the like.

[0109] Processing unit 110 may also execute monocular image analysis module 402 to detect various road hazards at step 520, such as, for example, parts of a truck tire, fallen road signs, loose cargo, small animals, and the like. Road hazards may vary in structure, shape, size, and color, which may make detection of such hazards more challenging. In some embodiments, processing unit 110 may execute monocular image analysis module 402 to perform multi-frame analysis on the plurality of images to detect road hazards. For example, processing unit 110 may estimate camera motion between consecutive image frames and calculate the disparities in pixels between the frames to construct a 3D-map of the road. Processing unit 110 may then use the 3D-map to detect the road surface, as well as hazards existing above the road surface.

[0110] At step 530, processing unit 110 may execute navigational response module 408 to cause one or more navigational responses in vehicle 200 based on the analysis performed at step 520 and the techniques as described above in connection with FIG. 4. Navigational responses may include, for example, a turn, a lane shift, a change in acceleration, and the like. In some embodiments, processing unit 110 may use data derived from execution of velocity and acceleration module 406 to cause the one or more navigational responses. Additionally, multiple navigational responses may occur simultaneously, in sequence, or any combination thereof. For instance, processing unit 110 may cause vehicle 200 to shift one lane over and then accelerate by, for example, sequentially transmitting control signals to steering system 240 and throttling system 220 of vehicle 200. Alternatively, processing unit 110 may cause vehicle 200 to brake while at the same time shifting lanes by, for example, simultaneously transmitting control signals to braking system 230 and steering system 240 of vehicle 200.

[0111] FIG. 5B is a flowchart showing an exemplary process 500B for detecting one or more vehicles and/or pedestrians in a set of images, consistent with disclosed embodiments. Processing unit 110 may execute monocular image analysis module 402 to implement process 500B. At step 540, processing unit 110 may determine a set of candidate objects representing possible vehicles and/or pedestrians. For example, processing unit 110 may scan one or more images, compare the images to one or more predetermined patterns, and identify within each image possible locations that may contain objects of interest (e.g., vehicles, pedestrians, or portions thereof). The predetermined patterns may be designed in such a way to achieve a high rate of "false hits" and a low rate of "misses." For example,

processing unit 110 may use a low threshold of similarity to predetermined patterns for identifying candidate objects as possible vehicles or pedestrians. Doing so may allow processing unit 110 to reduce the probability of missing (e.g., not identifying) a candidate object representing a vehicle or pedestrian.

[0112] At step 542, processing unit 110 may filter the set of candidate objects to exclude certain candidates (e.g., irrelevant or less relevant objects) based on classification criteria. Such criteria may be derived from various properties associated with object types stored in a database (e.g., a database stored in memory 140). Properties may include object shape, dimensions, texture, position (e.g., relative to vehicle 200), and the like. Thus, processing unit 110 may use one or more sets of criteria to reject false candidates from the set of candidate objects.

[0113] At step 544, processing unit 110 may analyze multiple frames of images to determine whether objects in the set of candidate objects represent vehicles and/or pedestrians. For example, processing unit 110 may track a detected candidate object across consecutive frames and accumulate frame-by-frame data associated with the detected object (e.g., size, position relative to vehicle 200, etc.). Additionally, processing unit 110 may estimate parameters for the detected object and compare the object's frame-by-frame position data to a predicted position.

[0114] At step 546, processing unit 110 may construct a set of measurements for the detected objects. Such measurements may include, for example, position, velocity, and acceleration values (relative to vehicle 200) associated with the detected objects. In some embodiments, processing unit 110 may construct the measurements based on estimation techniques using a series of time-based observations such as Kalman filters or linear quadratic estimation (LQE), and/or based on available modeling data for different object types (e.g., cars, trucks, pedestrians, bicycles, road signs, etc.). The Kalman filters may be based on a measurement of an object's scale, where the scale measurement is proportional to a time to collision (e.g., the amount of time for vehicle 200 to reach the object). Thus, by performing steps 540-546, processing unit 110 may identify vehicles and pedestrians appearing within the set of captured images and derive information (e.g., position, speed, size) associated with the vehicles and pedestrians. Based on the identification and the derived information, processing unit 110 may cause one or more navigational responses in vehicle 200, as described in connection with FIG. 5A, above.

[0115] At step 548, processing unit 110 may perform an optical flow analysis of one or more images to reduce the probabilities of detecting a "false hit" and missing a candidate

object that represents a vehicle or pedestrian. The optical flow analysis may refer to, for example, analyzing motion patterns relative to vehicle 200 in the one or more images associated with other vehicles and pedestrians, and that are distinct from road surface motion. Processing unit 110 may calculate the motion of candidate objects by observing the different positions of the objects across multiple image frames, which are captured at different times. Processing unit 110 may use the position and time values as inputs into mathematical models for calculating the motion of the candidate objects. Thus, optical flow analysis may provide another method of detecting vehicles and pedestrians that are nearby vehicle 200. Processing unit 110 may perform optical flow analysis in combination with steps 540-546 to provide redundancy for detecting vehicles and pedestrians and increase the reliability of system 100.

[0116] FIG. 5C is a flowchart showing an exemplary process 500C for detecting road marks and/or lane geometry information in a set of images, consistent with disclosed embodiments. Processing unit 110 may execute monocular image analysis module 402 to implement process 500C. At step 550, processing unit 110 may detect a set of objects by scanning one or more images. To detect segments of lane markings, lane geometry information, and other pertinent road marks, processing unit 110 may filter the set of objects to exclude those determined to be irrelevant (e.g., minor potholes, small rocks, etc.). At step 552, processing unit 110 may group together the segments detected in step 550 belonging to the same road mark or lane mark. Based on the grouping, processing unit 110 may develop a model to represent the detected segments, such as a mathematical model.

[0117] At step 554, processing unit 110 may construct a set of measurements associated with the detected segments. In some embodiments, processing unit 110 may create a projection of the detected segments from the image plane onto the real-world plane. The projection may be characterized using a 3rd-degree polynomial having coefficients corresponding to physical properties such as the position, slope, curvature, and curvature derivative of the detected road. In generating the projection, processing unit 110 may take into account changes in the road surface, as well as pitch and roll rates associated with vehicle 200. In addition, processing unit 110 may model the road elevation by analyzing position and motion cues present on the road surface. Further, processing unit 110 may estimate the pitch and roll rates associated with vehicle 200 by tracking a set of feature points in the one or more images.

[0118] At step 556, processing unit 110 may perform multi-frame analysis by, for example, tracking the detected segments across consecutive image frames and accumulating frame-by-frame data associated with detected segments. As processing unit 110 performs

multi-frame analysis, the set of measurements constructed at step 554 may become more reliable and associated with an increasingly higher confidence level. Thus, by performing steps 550-556, processing unit 110 may identify road marks appearing within the set of captured images and derive lane geometry information. Based on the identification and the derived information, processing unit 110 may cause one or more navigational responses in vehicle 200, as described in connection with FIG. 5A, above.

[0119] At step 558, processing unit 110 may consider additional sources of information to further develop a safety model for vehicle 200 in the context of its surroundings. Processing unit 110 may use the safety model to define a context in which system 100 may execute autonomous control of vehicle 200 in a safe manner. To develop the safety model, in some embodiments, processing unit 110 may consider the position and motion of other vehicles, the detected road edges and barriers, and/or general road shape descriptions extracted from map data (such as data from map database 160). By considering additional sources of information, processing unit 110 may provide redundancy for detecting road marks and lane geometry and increase the reliability of system 100.

[0120] FIG. 5D is a flowchart showing an exemplary process 500D for detecting traffic lights in a set of images, consistent with disclosed embodiments. Processing unit 110 may execute monocular image analysis module 402 to implement process 500D. At step 560, processing unit 110 may scan the set of images and identify objects appearing at locations in the images likely to contain traffic lights. For example, processing unit 110 may filter the identified objects to construct a set of candidate objects, excluding those objects unlikely to correspond to traffic lights. The filtering may be done based on various properties associated with traffic lights, such as shape, dimensions, texture, position (e.g., relative to vehicle 200), and the like. Such properties may be based on multiple examples of traffic lights and traffic control signals and stored in a database. In some embodiments, processing unit 110 may perform multi-frame analysis on the set of candidate objects reflecting possible traffic lights. For example, processing unit 110 may track the candidate objects across consecutive image frames, estimate the real-world position of the candidate objects, and filter out those objects that are moving (which are unlikely to be traffic lights). In some embodiments, processing unit 110 may perform color analysis on the candidate objects and identify the relative position of the detected colors appearing inside possible traffic lights.

[0121] At step 562, processing unit 110 may analyze the geometry of a junction. The analysis may be based on any combination of: (i) the number of lanes detected on either side of vehicle 200, (ii) markings (such as arrow marks) detected on the road, and (iii)

descriptions of the junction extracted from map data (such as data from map database 160). Processing unit 110 may conduct the analysis using information derived from execution of monocular analysis module 402. In addition, Processing unit 110 may determine a correspondence between the traffic lights detected at step 560 and the lanes appearing near vehicle 200.

[0122] As vehicle 200 approaches the junction, at step 564, processing unit 110 may update the confidence level associated with the analyzed junction geometry and the detected traffic lights. For instance, the number of traffic lights estimated to appear at the junction as compared with the number actually appearing at the junction may impact the confidence level. Thus, based on the confidence level, processing unit 110 may delegate control to the driver of vehicle 200 in order to improve safety conditions. By performing steps 560-564, processing unit 110 may identify traffic lights appearing within the set of captured images and analyze junction geometry information. Based on the identification and the analysis, processing unit 110 may cause one or more navigational responses in vehicle 200, as described in connection with FIG. 5A, above.

[0123] FIG. 5E is a flowchart showing an exemplary process 500E for causing one or more navigational responses in vehicle 200 based on a vehicle path, consistent with the disclosed embodiments. At step 570, processing unit 110 may construct an initial vehicle path associated with vehicle 200. The vehicle path may be represented using a set of points expressed in coordinates (x, z), and the distance d_i between two points in the set of points may fall in the range of 1 to 5 meters. In one embodiment, processing unit 110 may construct the initial vehicle path using two polynomials, such as left and right road polynomials. Processing unit 110 may calculate the geometric midpoint between the two polynomials and offset each point included in the resultant vehicle path by a predetermined offset (e.g., a smart lane offset), if any (an offset of zero may correspond to travel in the middle of a lane). The offset may be in a direction perpendicular to a segment between any two points in the vehicle path. In another embodiment, processing unit 110 may use one polynomial and an estimated lane width to offset each point of the vehicle path by half the estimated lane width plus a predetermined offset (e.g., a smart lane offset).

[0124] At step 572, processing unit 110 may update the vehicle path constructed at step 570. Processing unit 110 may reconstruct the vehicle path constructed at step 570 using a higher resolution, such that the distance d_k between two points in the set of points representing the vehicle path is less than the distance d_i described above. For example, the distance d_k may fall in the range of 0.1 to 0.3 meters. Processing unit 110 may reconstruct the

vehicle path using a parabolic spline algorithm, which may yield a cumulative distance vector S corresponding to the total length of the vehicle path (i.e., based on the set of points representing the vehicle path).

[0125] At step 574, processing unit 110 may determine a look-ahead point (expressed in coordinates as (x_l, z_l)) based on the updated vehicle path constructed at step 572. Processing unit 110 may extract the look-ahead point from the cumulative distance vector S, and the look-ahead point may be associated with a look-ahead distance and look-ahead time. The look-ahead distance, which may have a lower bound ranging from 10 to 20 meters, may be calculated as the product of the speed of vehicle 200 and the look-ahead time. For example, as the speed of vehicle 200 decreases, the look-ahead distance may also decrease (e.g., until it reaches the lower bound). The look-ahead time, which may range from 0.5 to 1.5 seconds, may be inversely proportional to the gain of one or more control loops associated with causing a navigational response in vehicle 200, such as the heading error tracking control loop. For example, the gain of the heading error tracking control loop may depend on the bandwidth of a yaw rate loop, a steering actuator loop, car lateral dynamics, and the like. Thus, the higher the gain of the heading error tracking control loop, the lower the look-ahead time.

[0126] At step 576, processing unit 110 may determine a heading error and yaw rate command based on the look-ahead point determined at step 574. Processing unit 110 may determine the heading error by calculating the arctangent of the look-ahead point, e.g., arctan (x_l / z_l). Processing unit 110 may determine the yaw rate command as the product of the heading error and a high-level control gain. The high-level control gain may be equal to: (2 / look-ahead time), if the look-ahead distance is not at the lower bound. Otherwise, the high-level control gain may be equal to: (2 * speed of vehicle 200 / look-ahead distance).

[0127] FIG. 5F is a flowchart showing an exemplary process 500F for determining whether a leading vehicle is changing lanes, consistent with the disclosed embodiments. At step 580, processing unit 110 may determine navigation information associated with a leading vehicle (e.g., a vehicle traveling ahead of vehicle 200). For example, processing unit 110 may determine the position, velocity (e.g., direction and speed), and/or acceleration of the leading vehicle, using the techniques described in connection with FIGS. 5A and 5B, above. Processing unit 110 may also determine one or more road polynomials, a look-ahead point (associated with vehicle 200), and/or a snail trail (e.g., a set of points describing a path taken by the leading vehicle), using the techniques described in connection with FIG. 5E, above.

[0128] At step 582, processing unit 110 may analyze the navigation information determined at step 580. In one embodiment, processing unit 110 may calculate the distance between a snail trail and a road polynomial (e.g., along the trail). If the variance of this distance along the trail exceeds a predetermined threshold (for example, 0.1 to 0.2 meters on a straight road, 0.3 to 0.4 meters on a moderately curvy road, and 0.5 to 0.6 meters on a road with sharp curves), processing unit 110 may determine that the leading vehicle is likely changing lanes. In the case where multiple vehicles are detected traveling ahead of vehicle 200, processing unit 110 may compare the snail trails associated with each vehicle. Based on the comparison, processing unit 110 may determine that a vehicle whose snail trail does not match with the snail trails of the other vehicles is likely changing lanes. Processing unit 110 may additionally compare the curvature of the snail trail (associated with the leading vehicle) with the expected curvature of the road segment in which the leading vehicle is traveling. The expected curvature may be extracted from map data (e.g., data from map database 160), from road polynomials, from other vehicles' snail trails, from prior knowledge about the road, and the like. If the difference in curvature of the snail trail and the expected curvature of the road segment exceeds a predetermined threshold, processing unit 110 may determine that the leading vehicle is likely changing lanes.

[0129] In another embodiment, processing unit 110 may compare the leading vehicle's instantaneous position with the look-ahead point (associated with vehicle 200) over a specific period of time (e.g., 0.5 to 1.5 seconds). If the distance between the leading vehicle's instantaneous position and the look-ahead point varies during the specific period of time, and the cumulative sum of variation exceeds a predetermined threshold (for example, 0.3 to 0.4 meters on a straight road, 0.7 to 0.8 meters on a moderately curvy road, and 1.3 to 1.7 meters on a road with sharp curves), processing unit 110 may determine that the leading vehicle is likely changing lanes. In another embodiment, processing unit 110 may analyze the geometry of the snail trail by comparing the lateral distance traveled along the trail with the expected curvature of the snail trail. The expected radius of curvature may be determined according to the calculation: $(\delta_z^2 + \delta_x^2) / 2 / (\delta_x)$, where δ_x represents the lateral distance traveled and δ_z represents the longitudinal distance traveled. If the difference between the lateral distance traveled and the expected curvature exceeds a predetermined threshold (e.g., 500 to 700 meters), processing unit 110 may determine that the leading vehicle is likely changing lanes. In another embodiment, processing unit 110 may analyze the position of the leading vehicle. If the position of the leading vehicle obscures a road polynomial (e.g., the leading vehicle is overlaid on top of the road polynomial), then processing unit 110 may

determine that the leading vehicle is likely changing lanes. In the case where the position of the leading vehicle is such that, another vehicle is detected ahead of the leading vehicle and the snail trails of the two vehicles are not parallel, processing unit 110 may determine that the (closer) leading vehicle is likely changing lanes.

[0130] At step 584, processing unit 110 may determine whether or not leading vehicle 200 is changing lanes based on the analysis performed at step 582. For example, processing unit 110 may make the determination based on a weighted average of the individual analyses performed at step 582. Under such a scheme, for example, a decision by processing unit 110 that the leading vehicle is likely changing lanes based on a particular type of analysis may be assigned a value of "1" (and "0" to represent a determination that the leading vehicle is not likely changing lanes). Different analyses performed at step 582 may be assigned different weights, and the disclosed embodiments are not limited to any particular combination of analyses and weights.

[0131] FIG. 6 is a flowchart showing an exemplary process 600 for causing one or more navigational responses based on stereo image analysis, consistent with disclosed embodiments. At step 610, processing unit 110 may receive a first and second plurality of images via data interface 128. For example, cameras included in image acquisition unit 120 (such as image capture devices 122 and 124 having fields of view 202 and 204) may capture a first and second plurality of images of an area forward of vehicle 200 and transmit them over a digital connection (e.g., USB, wireless, Bluetooth, etc.) to processing unit 110. In some embodiments, processing unit 110 may receive the first and second plurality of images via two or more data interfaces. The disclosed embodiments are not limited to any particular data interface configurations or protocols.

[0132] At step 620, processing unit 110 may execute stereo image analysis module 404 to perform stereo image analysis of the first and second plurality of images to create a 3D map of the road in front of the vehicle and detect features within the images, such as lane markings, vehicles, pedestrians, road signs, highway exit ramps, traffic lights, road hazards, and the like. Stereo image analysis may be performed in a manner similar to the steps described in connection with FIGS. 5A-5D, above. For example, processing unit 110 may execute stereo image analysis module 404 to detect candidate objects (e.g., vehicles, pedestrians, road marks, traffic lights, road hazards, etc.) within the first and second plurality of images, filter out a subset of the candidate objects based on various criteria, and perform multi-frame analysis, construct measurements, and determine a confidence level for the remaining candidate objects. In performing the steps above, processing unit 110 may consider

information from both the first and second plurality of images, rather than information from one set of images alone. For example, processing unit 110 may analyze the differences in pixel-level data (or other data subsets from among the two streams of captured images) for a candidate object appearing in both the first and second plurality of images. As another example, processing unit 110 may estimate a position and/or velocity of a candidate object (e.g., relative to vehicle 200) by observing that the object appears in one of the plurality of images but not the other or relative to other differences that may exist relative to objects appearing if the two image streams. For example, position, velocity, and/or acceleration relative to vehicle 200 may be determined based on trajectories, positions, movement characteristics, etc. of features associated with an object appearing in one or both of the image streams.

[0133] At step 630, processing unit 110 may execute navigational response module 408 to cause one or more navigational responses in vehicle 200 based on the analysis performed at step 620 and the techniques as described above in connection with FIG. 4. Navigational responses may include, for example, a turn, a lane shift, a change in acceleration, a change in velocity, braking, and the like. In some embodiments, processing unit 110 may use data derived from execution of velocity and acceleration module 406 to cause the one or more navigational responses. Additionally, multiple navigational responses may occur simultaneously, in sequence, or any combination thereof.

[0134] FIG. 7 is a flowchart showing an exemplary process 700 for causing one or more navigational responses based on an analysis of three sets of images, consistent with disclosed embodiments. At step 710, processing unit 110 may receive a first, second, and third plurality of images via data interface 128. For instance, cameras included in image acquisition unit 120 (such as image capture devices 122, 124, and 126 having fields of view 202, 204, and 206) may capture a first, second, and third plurality of images of an area forward and/or to the side of vehicle 200 and transmit them over a digital connection (e.g., USB, wireless, Bluetooth, etc.) to processing unit 110. In some embodiments, processing unit 110 may receive the first, second, and third plurality of images via three or more data interfaces. For example, each of image capture devices 122, 124, 126 may have an associated data interface for communicating data to processing unit 110. The disclosed embodiments are not limited to any particular data interface configurations or protocols.

[0135] At step 720, processing unit 110 may analyze the first, second, and third plurality of images to detect features within the images, such as lane markings, vehicles, pedestrians, road signs, highway exit ramps, traffic lights, road hazards, and the like. The

analysis may be performed in a manner similar to the steps described in connection with FIGS. 5A-5D and 6, above. For instance, processing unit 110 may perform monocular image analysis (e.g., via execution of monocular image analysis module 402 and based on the steps described in connection with FIGS. 5A-5D, above) on each of the first, second, and third plurality of images. Alternatively, processing unit 110 may perform stereo image analysis (e.g., via execution of stereo image analysis module 404 and based on the steps described in connection with FIG. 6, above) on the first and second plurality of images, the second and third plurality of images, and/or the first and third plurality of images. The processed information corresponding to the analysis of the first, second, and/or third plurality of images may be combined. In some embodiments, processing unit 110 may perform a combination of monocular and stereo image analyses. For example, processing unit 110 may perform monocular image analysis (e.g., via execution of monocular image analysis module 402) on the first plurality of images and stereo image analysis (e.g., via execution of stereo image analysis module 404) on the second and third plurality of images. The configuration of image capture devices 122, 124, and 126—including their respective locations and fields of view 202, 204, and 206—may influence the types of analyses conducted on the first, second, and third plurality of images. The disclosed embodiments are not limited to a particular configuration of image capture devices 122, 124, and 126, or the types of analyses conducted on the first, second, and third plurality of images.

[0136] In some embodiments, processing unit 110 may perform testing on system 100 based on the images acquired and analyzed at steps 710 and 720. Such testing may provide an indicator of the overall performance of system 100 for certain configurations of image capture devices 122, 124, and 126. For example, processing unit 110 may determine the proportion of "false hits" (e.g., cases where system 100 incorrectly determined the presence of a vehicle or pedestrian) and "misses."

[0137] At step 730, processing unit 110 may cause one or more navigational responses in vehicle 200 based on information derived from two of the first, second, and third plurality of images. Selection of two of the first, second, and third plurality of images may depend on various factors, such as, for example, the number, types, and sizes of objects detected in each of the plurality of images. Processing unit 110 may also make the selection based on image quality and resolution, the effective field of view reflected in the images, the number of captured frames, the extent to which one or more objects of interest actually appear in the frames (e.g., the percentage of frames in which an object appears, the proportion of the object that appears in each such frame, etc.), and the like.

[0138] In some embodiments, processing unit 110 may select information derived from two of the first, second, and third plurality of images by determining the extent to which information derived from one image source is consistent with information derived from other image sources. For example, processing unit 110 may combine the processed information derived from each of image capture devices 122, 124, and 126 (whether by monocular analysis, stereo analysis, or any combination of the two) and determine visual indicators (e.g., lane markings, a detected vehicle and its location and/or path, a detected traffic light, etc.) that are consistent across the images captured from each of image capture devices 122, 124, and 126. Processing unit 110 may also exclude information that is inconsistent across the captured images (e.g., a vehicle changing lanes, a lane model indicating a vehicle that is too close to vehicle 200, etc.). Thus, processing unit 110 may select information derived from two of the first, second, and third plurality of images based on the determinations of consistent and inconsistent information.

[0139] Navigational responses may include, for example, a turn, a lane shift, braking, a change in acceleration, and the like. Processing unit 110 may cause the one or more navigational responses based on the analysis performed at step 720 and the techniques as described above in connection with FIG. 4. Processing unit 110 may also use data derived from execution of velocity and acceleration module 406 to cause the one or more navigational responses. In some embodiments, processing unit 110 may cause the one or more navigational responses based on a relative position, relative velocity, and/or relative acceleration between vehicle 200 and an object detected within any of the first, second, and third plurality of images. Multiple navigational responses may occur simultaneously, in sequence, or any combination thereof.

[0140] Radar-Cued Visual System for Vehicle Navigation

[0141] Radar systems offer the potential for detecting objects in an environment surrounding a vehicle, even in conditions where visibility may be poor. Therefore, there is an interest in including radar sensor systems on vehicles for purposes of aiding in navigation. For example, driver-assist systems, collision warning/avoidance systems, autonomous vehicles, and semi-autonomous vehicles may all benefit from the potential target object detection capabilities that radar systems offer.

[0142] While radar sensors may provide accurate ranging information, they also can exhibit certain deficiencies. First, radar sensors may generate frequent "ghost" detections, which may cause false positives in a vehicle navigation or collision avoidance system. Such unwanted ghost detections may result, for example, when objects are present in the vicinity of

the vehicle, and those objects exhibit good radar reflectivity, but pose little or no threat to the vehicle. Such objects may include those with non-upright profiles or insignificant size. Manhole covers, soda cans, small debris, etc. may result in radar ghost detections. In some instances, ghost detections may occur even when no object is present.

[0143] Second, radar sensors may offer angular resolution and angular accuracy characteristics that may be unsuitable for certain vehicle applications. For example, forward collision warning systems and vehicle navigation systems (either autonomous or driver assist) may require accurate information regarding the angular location of a target object relative to the vehicle or a path of travel of the vehicle.

[0144] To enhance the reliability and usability of radar-based sensor systems, such radar systems may be deployed on a vehicle in combination with an image sensor system including one or more image acquisition devices. The radar and image systems may be used in tandem to reduce or eliminate the occurrence of ghost detections by the radar system and to accurately determine one or more of the angular position of a target object relative to the vehicle and the solid viewing angle that a target object occupies within the field of view of an image acquisition device. From a combination of range information from the radar, as well as spatial location information derived from the image system, performance of collision warning systems, driver assist systems, and other types of vehicle navigation systems may be enhanced.

[0145] Fig. 8 provides a diagrammatic representation of a system 100 along with all of the same parts and features associated with system 100 as described above relative to Figs. 1, 2A, 2B, 2C, 2D, 2E, and others. In the embodiment shown in Fig. 8, a radar unit 801, including one or more radar sensors 802, is included in system 100. Radar unit 801 may provide an output either directly or indirectly to application processor 180 (or any other suitable logic based device) via, for example, data interface 128.

[0146] In some embodiments, radar unit 801 may be combined with an image acquisition unit 120 that includes a single image capture device or multiple image capture devices. In some cases, radar unit 801 may be included on a vehicle equipped with two image capture devices (e.g., image capture device 122 and image capture device 124) as shown in Figs. 9A, 9B, and 9C. In other embodiments, radar unit 801 may be included on a vehicle equipped with three image capture devices (e.g., image capture device 122, image capture device 124, and image capture device 126) as shown in Figs. 8, 9D, and 9E.

[0147] Radar unit 801 may be located at any suitable location relative to vehicle 200. In some cases, as shown in Figs. 9A-9E, radar unit 801 may be located on the roof of the

vehicle. In other cases, radar unit 801 may be located in front of or behind the windshield, in the grill, in or on the forward bumper (in or on the rear bumper, in some rear facing cases), in or on a side panel (e.g., for blind spot detection), or at any other viable location on vehicle 200.

[0148] Radar unit 801 may include any suitable type of radar useful in identifying the presence of target objects in a vehicle navigation application. For example, in some embodiments, radar unit 801 may include mechanically scanning radar. In other embodiments, electronically scanning radar may be used that reduce or eliminate moving parts from radar unit 801. Any suitable frequencies or frequency ranges may be employed. For example, radar units operating at frequencies of 79 GHz, 77 GHz, 25 GHz, or 24 GHz may be used. Such units may offer various detection ranges along with various scan angles. In some embodiments, radar unit 801 may have a detection range of 100m, 200m, 250m, or more and may offer scan angles of up to 360 degrees.

[0149] In the disclosed embodiments, radar unit 801 may provide information relating to one or multiple target objects in an environment of vehicle 200. Such information may include, for example, an indication of the presence of one or more target objects in the vicinity of vehicle 200 and an indication of a distance (range) to the one or more target objects. In some cases, additional information may be available from radar unit 801, such as a radar range rate (e.g., a rate that a target object is moving toward or away relative to vehicle 200). The radar range and/or radar range rate information provided from radar unit 801 may serve as an indicator of a time to contact between vehicle 200 and a target object.

[0150] During operation, radar unit 801 may provide a radar range, radar angle, and/or a radar range rate relative to a target object either directly or indirectly to application processor 180. Using this information, application processor 180 may determine a time to contact between vehicle 200 and a particular target object.

[0151] In addition to radar information, application processor 180 and/or image processor 190 may receive image data captured by one or more of image capture device 122, 124, or 126. This image data may be received in the form of a series of image frames captured at predetermined time intervals.

[0152] Using the received radar information together with the plurality of images, processing unit 110 may determine whether a particular radar detection correlates to a real world target object. If a target object is validated, processing unit 110 may identify physical attributes of the target object such as edges of the object, height of the object relative to a road surface or other surface, and angular location of the target object relative to vehicle 200.

[0153] More specifically, a process for validating and locating a target object may include the identification of a rough region of interest (ROI) in one or more of the received plurality of images from the image acquisition unit 120. For example, based on the angle and range associated with a particular radar detection, and knowing values of various parameters associated with the image acquisition device that supplied a certain image (e.g., the camera/radar calibration values, camera focal length, and height of the camera above the road), processing unit 110 may determine what region of an acquired image is likely to include a target object associated with a particular radar detection. Such a rough region of interest in the acquired image may be designated by left, right, bottom, and top boundaries of a region of the acquired image where the target object may be found.

[0154] Next, the optical flow between the rough region of interest in the acquired image and a corresponding region of a second acquired image may be determined. Conceptually, the optical flow between at least a pair of acquired images may be associated with the changing angular position of corresponding points in the images. As an example, as a vehicle travels directly toward a target object on a roadway, the target object will appear to the driver as expanding radially in all directions as the vehicle moves closer to the target object. Similarly, in images captured over time from an image captured device located in or on a vehicle, a target object captured in the images will appear to expand radially in all directions relative to images captured earlier in a sequence of images. The non-moving point directly in front of the vehicle at the center of the horizon, from which the objects in a sequence of images captured from a moving vehicle appear to emanate, is referred to as the focus of expansion.

[0155] Regarding objects in motion, if the target object is moving relative to the stationary world, the FOE will reflect the relative motion between the host vehicle and the target object. For example, if a vehicle is approaching from the right (at an intersection for example) the FOE will be to the right of the image. If the vehicle and the target object are on a collision course, the FOE will be on the target object. Because the FOE depends on the motion of the target, the FOE may be useful in isolating the target from its surroundings within one or more images of a scene.

[0156] In practice, the optical flow between two images and, more specifically, between a particular feature point within a region of interest in a first image and a corresponding feature point in a region of interest in a second image may be determined in a number of ways. As a first step, pairs of corresponding feature points from the two images may be determined. In one technique, a pair of corresponding feature points may be

determined by defining a patch around a particular feature point in the region of interest of the first image (or about every pixel in the region of interest of the first image). Then, every defined patch from the first image may be compared with patches from the second image within a predetermined search area (e.g., within a predetermined or selectable range of pixels) relative to a selected patch from the first image. From every patch comparison, a correlation score may be determined based on the similarity of the compared patches. The patch from the second image that provides the highest correlation score with the patch from the first image containing the feature point of interest determines the location of that feature point in the second image.

[0157] Another technique for determining pairs of corresponding feature points from the two images involves matching or registration based on detected feature points. For example, certain feature points (e.g., corners of objects or other well-defined points in the image data) may be detected in the first image through image analysis. Similar feature points may also be detected in a second image. Patches may be defined around the detected feature points from both the first and second images. Any number of feature points may be detected within a region of interest (e.g., a region that includes 10 feature points, 20 feature points, 50 feature points, or more). A correlation score may be calculated for each patch defined for the first image by comparing each individual patch of the first image with each patch of the second image. The pair of patches (one from the first image and one from the second image) with the highest correlation score indicates the location of a particular, detected feature point in both the first and second images.

[0158] Once the locations are known for a set of feature points (or patches or other suitable image segment) in the first image and the corresponding set of feature points (or patches or any other suitable image segment) in the second image, the optical flow between the images may be determined. For example, for each corresponding pair of feature points (patches or image segments) in the pair of images, the motion that resulted in movement of the feature points from their location in the first image to their location in the second image may be determined. This motion represents the optical flow between the corresponding points of the pair of images. The optical flow inside the region of interest defined for the first image may be represented as a set of {(x,y,u,v)i} quadruples representing image positions (x,y)i and the 2D flow (u,v)i measured at those positions.

[0159] If a rolling shutter is employed on one or more of the image capture devices, an observed vertical motion in the image may indicate or result from the fact that the two points were imaged at a slightly different time. If the rolling shutter scans from top to bottom

an upward flow of N lines, for example, means that the time between imaging is less than a frame (by N line scan times). To get more accurate estimates of the optical flow, the flow vectors can be corrected by extending in the vector direction by frameTime/(frameTime-N*linetime).

[0160] Next, an expected optical inflation value (ds) may be determined based on information obtained from radar unit 801. For example, using the radar range to the target object, radar range rate between the target object and vehicle, and the time between captured images (dt), the expected optical inflation value in the region of interest may be represented as:

[0161] Optical inflation (ds) = dt/TTC = dt * (range rate)/range;

[0162] where TTC is the time to contact between the target object and the vehicle.

Using the expected optical inflation value and the determined optical flow information, the target object may be isolated within the region of interest. For example, using as input the set of {(x,y,u,v)i} quadruples along with the optical inflation (ds) expectation, a consensus set of pixels {(x,y)} may be determined where the optical flow substantially matches the expected optical inflation. This consensus set of pixels (image segments, points, or other portions of the region of interest in the plurality of images) may represent a target object region in the plurality of images occupied by the target object. The points, pixels, image segments, etc. associated with this target object region may share a common focus of expansion, as opposed to other image areas within the region of interest that do not correspond to the target object. For those other image areas (e.g., image portions associated with the road or background objects), the determined optical flow for those areas will likely not match the expected optical inflation determined based on the target object range and range rate, because the background objects and road (aside from the portion of the road located at the same range as the target object) will have ranges different from the target object.

[0163] Regarding the focus of expansion (FOE) and its relationship to the TTC or time to contact, all stationary points in a captured image will share the same true FOE, which corresponds to the direction that vehicle 200 is traveling. For an upright object, if a TTC to that object is available (e.g., based on the output of radar unit 801), the estimated FOE for every point in the object's image may be derived based on the optical flow (i.e., the points' motion in the image). If the TTC for every point in an image was available, and every point in the image could be tracked from frame to frame, then the same FOE may be derived for all points in the image. In practice, however, a TTC may be available only for a single radar-

detected object or a group of radar-detected objects and not for every point associated with a particular image. Deriving the FOE based on the TTC value for a single detected object may yield the same FOE for all imaged points associated with that object (assuming the TTC is valid for all points of the object). On the other hand, using the TTC associated with a target object to derive and FOE associated with a background object or a foreground object at a range different from the detected target object may result in an FOE different from the one derived for the target object. These differences in derived FOE values may be used to isolate a target object within an image to both confirm that a radar detection corresponds to an actual object and to determine the size, shape, and spatial orientation of the target object relative to vehicle 200.

[0164] Examining the process for isolating the target object in the image frames in further detail, when approaching an upright target object in a roadway, the optical flow of a pixel/patch in the image can be described using a model as a function of the position in the image, TTC, and the FOE. The radar may detect an object that moves from distance Z_1 in frame 1 to distance Z_2 in frame 2. A feature on the target object having coordinates (x_1, y_1) may be detected in frame 1 and tracked to coordinates (x_2, y_2) in frame 2. The point may be assumed as lying at a constant lateral distance X from the optical axis and at a constant height Y above the road. Using a pinhole camera model, the motion $(\Delta x, \Delta y)$ of the feature point in the image may be given by:

$$x_1 = x_0 + X \cdot f/Z_1,\ y_1 = y_0 - (cH - Y) \cdot f/Z_1$$
$$x_2 = x_0 + X \cdot f/Z_2,\ y_2 = y_0 - (cH - Y) \cdot f/Z_2$$
$$\Rightarrow \Delta x \equiv x_2 - x_1 = X \cdot f \cdot (1/Z_2 - 1/Z_1) = (x_1 - x_0) \cdot Z_1 \cdot (1/Z_2 - 1/Z_1) = (x_1 - x_0) \cdot (Z_1 - Z_2)/Z_2$$
$$\Rightarrow \Delta y \equiv y_2 - y_1 = -(cH - Y) \cdot f \cdot (1/Z_2 - 1/Z_1) = (y_1 - y_0) \cdot Z_1 \cdot (1/Z_2 - 1/Z_1) = (y_1 - y_0) \cdot (Z_1 - Z_2)/Z_2$$

[0165] where the camera's focal length is given by f and its height by cH. The FOE is unknown and given by (x_0, y_0).

[0166] The motion equations can therefore be parametrized as follows:

[0167] $\Delta x = S \cdot (x - x_0)$

[0168] $\Delta y = S \cdot (y - y_0)$

[0169] where the scale $S = (Z_1 - Z_2)/Z_2$ describes the expansion in the image of the object relative to the FOE. The time to contact (TTC) with the object, assuming that the relative speed between the target object and the vehicle remains constant, can be derived from the scale S as follows:

[0170] $S \equiv -\Delta Z/Z$

[0171] $\Rightarrow \mathrm{TTC} = -Z/V_{rel} = -Z \cdot \Delta t/\Delta Z = \Delta t/S$

[0172] In practice, the consensus set of feature points may be described by the largest union of points whose observed motion can be described by a certain fixed FOE, given the TTC obtained from the radar target. The size of this consensus set will define the probability that there is an actual upright object with a TTC as obtained from the radar target within the region of interest as defined by the radar target.

[0173] Any suitable approach may be used for detecting the set of pixels in the image that correspond to the expected TTC, as obtained from the radar target. In one embodiment, an optimization technique may be used, such that given a set of N feature points $\{(x_i, y_i)\}_{i=1}^{N}$, observed motions $\{(\Delta x_i, \Delta y_i)\}_{i=1}^{N}$ and radar scale (minus the range divided by the range-rate), we can derive the estimated FOE $(\hat{x}_0, \hat{y}_0)$ that best describes the observed motion (i.e. the model that predicts motions $(\widehat{\Delta x}_i, \widehat{\Delta y}_i)$ that are optimal in a sense that they are 'closest' to the observed motions). The number of points whose observed motion vectors are sufficiently close (euclidian distance measure) to the expected motion vectors, will define the consensus set.

[0174] In another embodiment, a Hough transform approach may be used. In this approach, for each tracked point i, the FOE $\{x_0(S, \Delta x_i, x_i), y_0(S, \Delta y_i, y_i)\}$ may be derived as a function of the point's position, measured translation in the image, and the expected TTC or scale. A two-dimensional histogram (Hough transformation) may be constructed by discretizing the obtained FOE. Then, the value in the histogram that obtained the highest number of votes may be determined in order to define the consensus set of points that contributed to that value.

[0175] As an output of the target identification process based on the radar information together with the visual image information, a target object region may be identified in the images. This target object region may be delineated by an image bounding box (or other shape) encompassing the consensus set {(x,y)} of pixels that comply with the expected optical inflation and share a common FOE in agreement with a TTC determined based on the detected radar information. Using this target object region, the edges of a physical target object may be identified and located relative to vehicle 200. Further, the height, shape, width or any other dimensional characteristics of the target object may be determined. Combining the target object region in an acquired image with known parameters of the image acquisition device (e.g., the focal length, height above the road, orientation relative to vehicle 200, etc.)

may enable determination of the angular orientation of the target object relative to vehicle 200.

[0176] Such information may be helpful in determining whether the target object resides in a path of vehicle 200. For example, if based on the location in a certain image of the target object region, processing unit 110 determines that the target object falls within a travel path of vehicle 200, processing unit 200 may cause any of a number of system responses. In some embodiments the system response may include a navigation response, such as braking, changing steering direction, etc. If processing unit 110 determines that allowing vehicle 200 to continue along the current travel direction may result in a collision with the target object, then processing unit may warn a driver of vehicle 200, automatically change a steering direction, automatically apply the vehicle's brakes, etc. For example, processing unit 110 may provide a notice to the driver of the vehicle (e.g., an audible sound or visual indicator via user interface 170) and/or provide control signals to one or more of throttling system 220, braking system 230, and steering system 240 to navigate vehicle 200. In some embodiments, processing unit 110 may continue to analyze images and/or radar output to determine whether the system response should be interrupted (e.g., if the object has moved out of the path of vehicle 200, discontinue applying the brakes).

[0177] Figs. 10 through 13 represent various phases of the process for identifying a target object region within one or more images. For example, Fig. 10 depicts a scene 1001 including a road 1002 on which vehicle 200 is traveling. Fig. 10 may represent scene 1001 from, for example, a forward facing perspective of vehicle 200. Consistent with the discussion above, the true FOE for scene 1001 as vehicle 200 travels along road 1002 will appear to be located at point 1004. Positioned in one of the lanes of road 1002 is an upright hazard in the form of a trash can 1006. As vehicle 200 approaches trash can 1006, radar unit 801 may acquire range and range rate information relative to vehicle 200 and trash can 1006. From this information, a TTC between vehicle 200 and trash can 1006 may be determined.

[0178] As vehicle 200 approaches trash can 1006, images of the scene, including trash can 1006, may be acquired by one or more of image acquisition devices 122, 124, and/or 126. As noted above, the radar information may also be used to identify regions of interest within captured images where the detected target object may be located. Figs. 11A and 11B show representative regions of interest from each of a pair of acquired images, as determined based on the information associated with detection by the radar unit 801 of trash can 1006. As vehicle 200 travels along the center of road 1002, a series of images may be captured showing trash can 1006. Due to the motion of vehicle along road 1002 in the direct

of FOE 1004, images of trash can 1006 captured later in the sequence will show trash can 1006 expanding within the image frame as well as moving down and to the right within the image frame (as represented by Figs. 11A and 11B).

[0179] The optical flow from the image region shown in Fig. 11A to the image region in Fig. 11B may be determined. For example, based on any of the methods discussed above, the motion of any of selected target or reference points 1008, 1010, and 1012 (or any other number of target or reference points) on trash may 1006 may be determined from the frame shown in Fig. 11A to the frame shown in Fig. 11B. In some cases, the target or reference points may coincide with features in the image distinguishable from the immediate surroundings (e.g., a corner of an object, small dark or light areas of an object, a light source, a handle, bump, etc.). Such target or reference points may be readily identified in subsequent images and may provide a high level of confidence that the identified reference point in one or more subsequent images corresponds with the reference point chosen from the original image. The determined motion constitutes the measured optical flow, which is a 2D vector, (u, v).

[0180] Fig. 12A provides a diagrammatic representation of plotted values of the horizontal optical flow between Figs. 11A and 11B. Similarly, Fig. 12B provides a diagrammatic representation of plotted values of the vertical optical flow between Figs. 11A and 11B. Using the radar range and radar range rate information, an expected optical inflation magnitude may be determined as a scale factor. And, given the scale from the radar, all pixels, points, image segments, patches, etc. that share a common FOE may be determined. The optical flow determination is separable, meaning that it can be determined or solved separately for the measured vertical flow and the measured horizontal flow. Thus, for a given radar-determined scale and vertical flow, for example, associated with vertical position (y) in the image of Fig. 12B, the following expression may be used:

[0181] FOE.y = y –V/(scale -1), where V is vertical flow and the scale is the optical inflation magnitude derived from the radar range and range rate values.

[0182] Thus, applying this expression to the vertical flow data represented by Fig. 12B and scaling by the radar-determined scaling factor, a plot similar to the one shown in Fig. 13 may be obtained. Fig. 13 includes a target object region 1301 coinciding with points in the image that, for the measured radar range and radar rate values, share a common FOE. Target object region 1301 coincides with trash can 1006 and may be used to confirm the presence of an actual target object as well as locate the trash can spatially relative to vehicle 200 (using not only the radar range and radar rate measurements, but also known

characteristics associated with the image acquisition device(s) that captured the images of trash can 1006(. As a result, edge locations, size and shape characteristics, etc. may all be determined for trash can 1006, and if trash can 1006 resides in the path of vehicle 200, system 100 may provide a warning to a driver of vehicle 200 or cause one or more navigational changes to occur.

[0183] The presently described embodiments may operate in a stand-alone capacity in a navigational system for a vehicle. In some embodiments, though, the radar-cued navigational system may be integrated with or operated in conjunction with one or more other navigational systems for a vehicle. For example, in some cases the radar-cued visual navigation system may operate with or be integrated with an advanced driver assist system (ADAS) and may be used to provide at least some functionality to the ADAS system. Navigational assist modules for traffic sign recognition (TSR), lane departure warning (LDW), intelligent headlight control (IHC), and/or traffic light detection may all benefit from radar-cued output. For example, in some embodiments, as vehicle 200 approaches an intersection, the optical flow of identified light sources present in two or more images may be observed. The optical flow of such light sources may be compared to time to contact (TTC) values available from radar unit 801 for stationary objects in the surrounding environment of vehicle 200 (such TTC values may be determined, for example, based on radar range rate and vehicle speed). Where a TTC value for a stationary object agrees with the optical flow observed for a light source in the acquired images, application processor 180, e.g., may determine that the light source is a traffic light or is a potential traffic light. If the light source is determined to be a traffic light, the system may further determine the color associated with the light source. If the light source is red or yellow, then a warning may be issued for the driver to slow to a stop. Alternatively, the system could automatically apply the brakes and slow the vehicle to a stop. If the light source is green, then no navigational change may be deemed necessary.

[0184] The presently disclosed system may also operate according to different modes. For example, in some situations there may be benefits from operating the navigational system in a wide detect mode. For example, in an urban environment where vehicle speeds may be reduced, but the number of potential target objects surrounding vehicle 200, such as pedestrians, lights, intersections, trash cans, etc., may be higher, the system may select a wide mode of operation. In other environments, such as a rural road, for example, where speeds may be higher than in a city, and the number of potential target objects may be fewer, the navigational system may select a narrow mode of operation. In some embodiments, the wide

mode of operation may be associated with analysis of images from an image capture device having a wider field of view than another available image capture device having a narrower field of view. The navigational system may select a certain camera (or lens where lenses are selectable or adjustable) for image capture or image analysis based on any suitable factor. For example, applications processor may select image acquisition device 122 for image capture or for image stream analysis in certain situations and may select image acquisition device 124 or 126 in other situations. In some embodiments, a camera, lens, or image stream may be selected based on radar range or range rate information obtained from radar unit 801, based on vehicle speed, based on a recognized environment or target object density derived from the captured images and/or radar information, or using any other suitable parameter.

[0185] The foregoing description has been presented for purposes of illustration. It is not exhaustive and is not limited to the precise forms or embodiments disclosed. Modifications and adaptations will be apparent to those skilled in the art from consideration of the specification and practice of the disclosed embodiments. Additionally, although aspects of the disclosed embodiments are described as being stored in memory, one skilled in the art will appreciate that these aspects can also be stored on other types of computer readable media, such as secondary storage devices, for example, hard disks or CD ROM, or other forms of RAM or ROM, USB media, DVD, Blu-ray, or other optical drive media.

[0186] Computer programs based on the written description and disclosed methods are within the skill of an experienced developer. The various programs or program modules can be created using any of the techniques known to one skilled in the art or can be designed in connection with existing software. For example, program sections or program modules can be designed in or by means of .Net Framework, .Net Compact Framework (and related languages, such as Visual Basic, C, etc.), Java, C++, Objective-C, HTML, HTML/AJAX combinations, XML, or HTML with included Java applets.

[0187] Moreover, while illustrative embodiments have been described herein, the scope of any and all embodiments having equivalent elements, modifications, omissions, combinations (e.g., of aspects across various embodiments), adaptations and/or alterations as would be appreciated by those skilled in the art based on the present disclosure. The limitations in the claims are to be interpreted broadly based on the language employed in the claims and not limited to examples described in the present specification or during the prosecution of the application. The examples are to be construed as non-exclusive. Furthermore, the steps of the disclosed methods may be modified in any manner, including by reordering steps and/or inserting or deleting steps. It is intended, therefore, that the

specification and examples be considered as illustrative only, with a true scope and spirit being indicated by the following claims and their full scope of equivalents.

WHAT IS CLAIMED IS:

1. A navigation system for a vehicle, the system comprising:

at least one image capture device configured to acquire a plurality of images of an environment of a vehicle;

a radar sensor to detect an object in the environment of the vehicle and to provide and output including range information indicative of at least one of a range or range rate between the vehicle and the object; and

at least one processing device programmed to:

receive the plurality of images from the at least one image capture device;

receive the output from the radar sensor;

determine, for each of a plurality of image segments in a first image, from among the plurality of images, and corresponding image segments in a second image, from among the plurality of images, an indicator of optical flow;

determine a value indicative of an expected optical inflation associated with the object in the plurality of images based at least upon the range information from the output of the radar sensor;

determine one or more areas of the second image where the value indicative of an expected optical inflation associated with the object substantially matches the indicator of optical flow;

identify a target object region, including at least a subset of the determined one or more areas of the second image; and

cause a system response based on the identified target object region.

2. The navigation system of claim 1, wherein the target object region is associated with a common focus of expansion.

3. The navigation system of claim 1, wherein the at least one processing device is further programmed to determine an angular position of the object relative to the vehicle based on a determined location of the target object region.

4. The navigation system of claim 1, wherein the at least one processing device is further programmed to determine a location of the object relative to the vehicle based on the identified target object region.

5. The navigation system of claim 1, wherein the system response includes at least one of braking or a change in current travel direction of the vehicle if the at least one processing device determines that the current travel direction may result in a collision with the object.

6. The navigation system of claim 1, wherein the system response is a navigational response including braking.

7. The navigation system of claim 1, wherein the system response is a navigational response including a change in a direction of travel of the vehicle.

8. The navigation system of claim 1, wherein the at least one processing device is further programmed to identify edges of the object based on the identified target object region.

9. The navigation system of claim 1, wherein the at least one processing device is further programmed to determine a height of the object based on the identified target object region.

10. The navigation system of claim 1, wherein the output of the radar sensor includes an indicator of a time to contact between the vehicle and the object.

11. The navigation system of claim 1, wherein the at least one processing device is configured to account for at least one effect caused by use of a rolling shutter to acquire the plurality of images in determining the indicator of optical flow.

12. The navigation system of claim 1, wherein the at least one processing device is configured to select an operational mode from among at least a first mode and a second mode, where the first mode is associated with a wider image capture field

of view than the second mode, based on the range information from the radar sensor.

13. A vehicle comprising a navigation system, the navigation system comprising:

at least one image capture device configured to acquire a plurality of images of an environment of the vehicle;

a radar sensor to detect an object in the environment of the vehicle and to provide and output including range information indicative of at least one of a range or range rate between the vehicle and the object; and

at least one processing device programmed to:

receive the plurality of images from the at least one image capture device;

receive the output from the radar sensor;

determine, for each of a plurality of image segments in a first image, from among the plurality of images, and corresponding image segments in a second image, from among the plurality of images, an indicator of optical flow;

determine a value indicative of an expected optical inflation associated with the object in the plurality of images based at least upon the range information in the output of the radar sensor;

determine one or more areas of the second image where the value indicative of an expected optical inflation associated with the object substantially matches the indicator of optical flow;

identify a target object region, including at least a subset of the determined one or more areas of the second image; and

cause a system response based on the identified target object region.

14. The vehicle of claim 13, wherein the at least one processing device is further programmed to determine an angular position of the object relative to the vehicle based on a determined location of the target object region.

15. The vehicle of claim 13, wherein the at least one processing device is further programmed to determine a location of the object relative to the vehicle based on the identified target object region.

16. The vehicle of claim 13, wherein the system response includes at least one of braking or a change in current travel direction of the vehicle if the at least one processing device determines that the current travel direction may result in a collision with the object.

17. The vehicle of claim 13, wherein the at least one processing device is further programmed to identify edges of the object based on the identified target object region.

18. The vehicle of claim 13, wherein the at least one processing device is further programmed to determine a height of the object based on the identified target object region.

19. The vehicle of claim 13, wherein the output of the radar sensor includes an indicator of a time to contact between the vehicle and the object.

20. The vehicle of claim 13, wherein the processing device is further configured to identify a light source in at least one of the plurality of images, determine whether the light source is a traffic light based on the indicator of optical flow and the output of the radar sensor, and cause automatic application of brakes of the vehicle if the traffic light is determined to be yellow or red.

21. A method for navigating a vehicle based on radar detection and visual image data, the method comprising:

acquiring a plurality of images of an environment of the vehicle;

detecting an object in the environment of the vehicle using a radar sensor and providing an output of the radar sensor including range information indicative of at least one of a range or range rate between the object and the vehicle;

receiving, at one or more processing devices, the plurality of images from the at least one image capture device and the output from the radar sensor;

determining an indicator of optical flow, for each of a plurality of image segments in a first image, from among the plurality of images, and corresponding image segments in a second image, from among the plurality of images;

identifying a target object region having a substantially common focus of expansion, based the range information provided by the radar sensor and the determined indicators of optical flow; and

causing a system response based on the identified target object region.

22. A navigation system for a vehicle, the system comprising:

at least one image capture device configured to acquire a plurality of images of an environment of a vehicle;

a radar sensor to detect an object in the environment of the vehicle and to provide and output including range information indicative of at least one of a range or range rate between the vehicle and the object; and

at least one processing device programmed to:

receive the plurality of images from the at least one image capture device;

receive the output from the radar sensor;

determine, for each of a plurality of image segments in a first image, from among the plurality of images, and corresponding image segments in a second image, from among the plurality of images, an indicator of optical flow;

identify a target object region having a substantially common focus of expansion, based on the range information provided by the radar sensor and the determined indicators of optical flow; and

cause a system response based on the identified target object region.

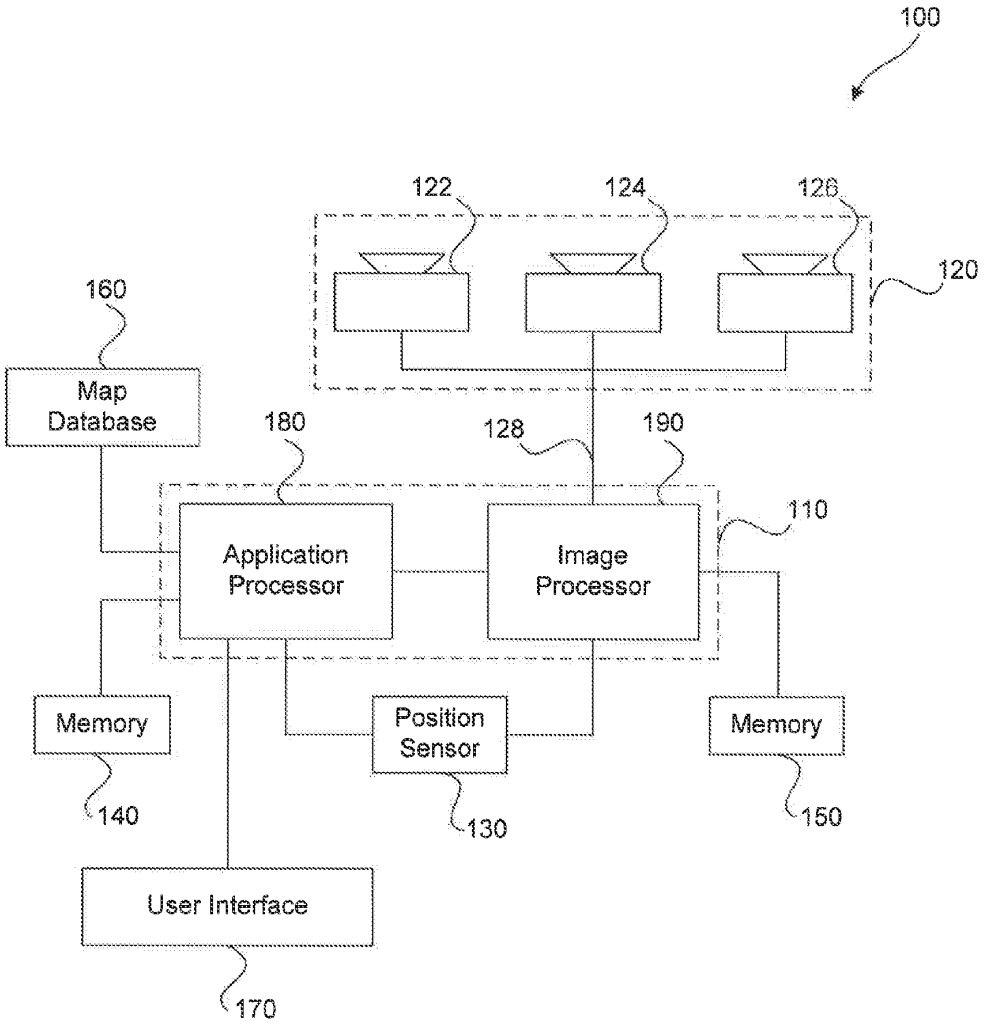
100
122
124
126
120
160
Map Database
180
128
190
110
Application Processor
Image Processor
Memory
Position Sensor
Memory
140
130
150
User Interface
170

FIG. 1

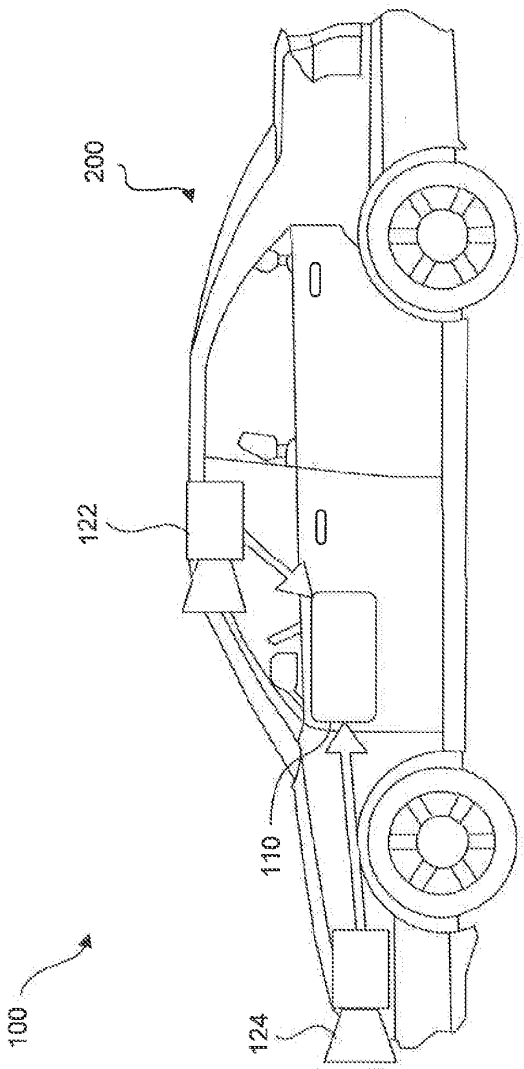

FIG. 2A

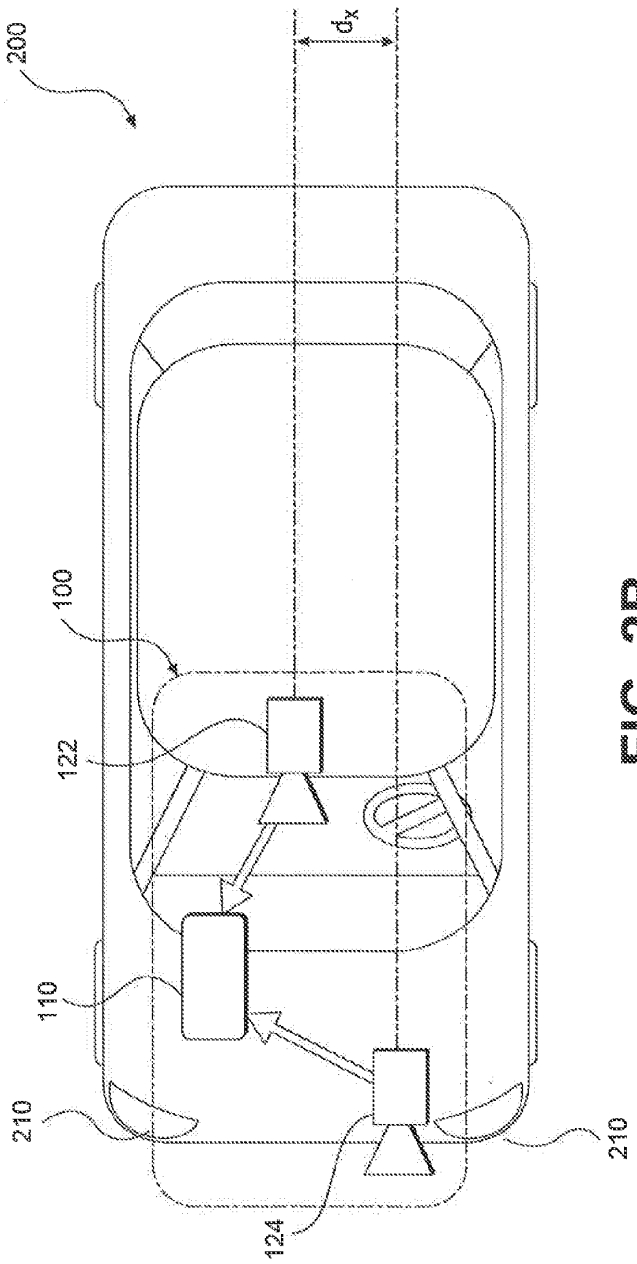

FIG. 2B

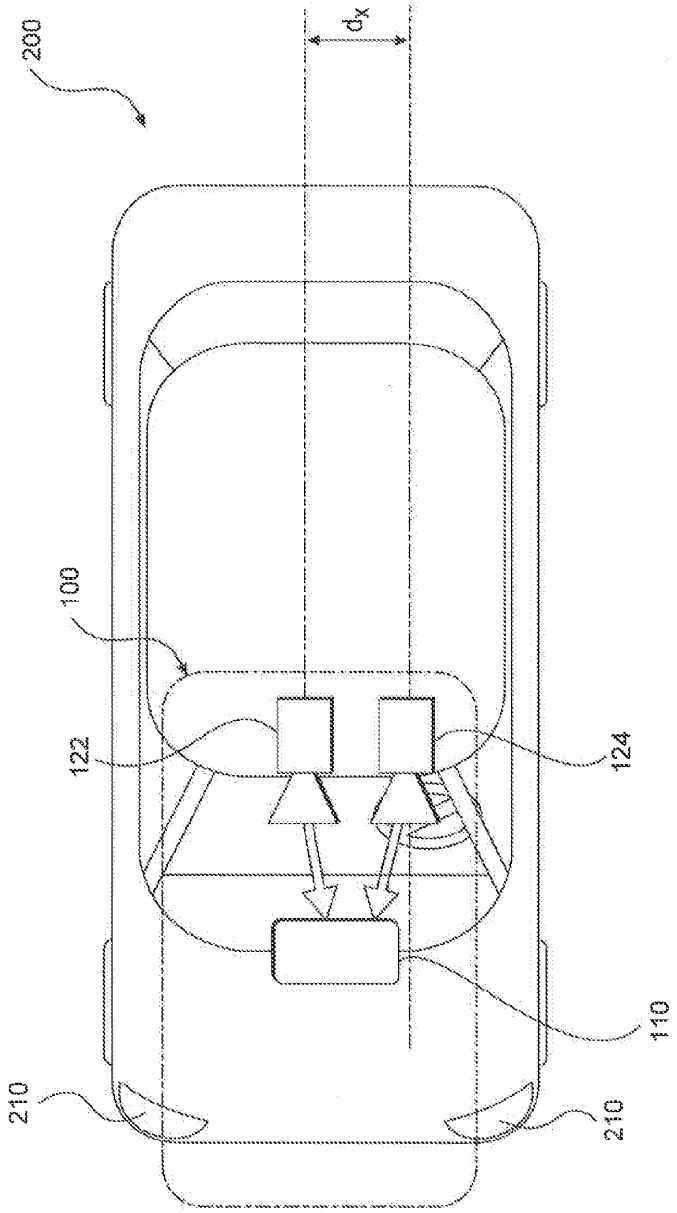

FIG. 2C

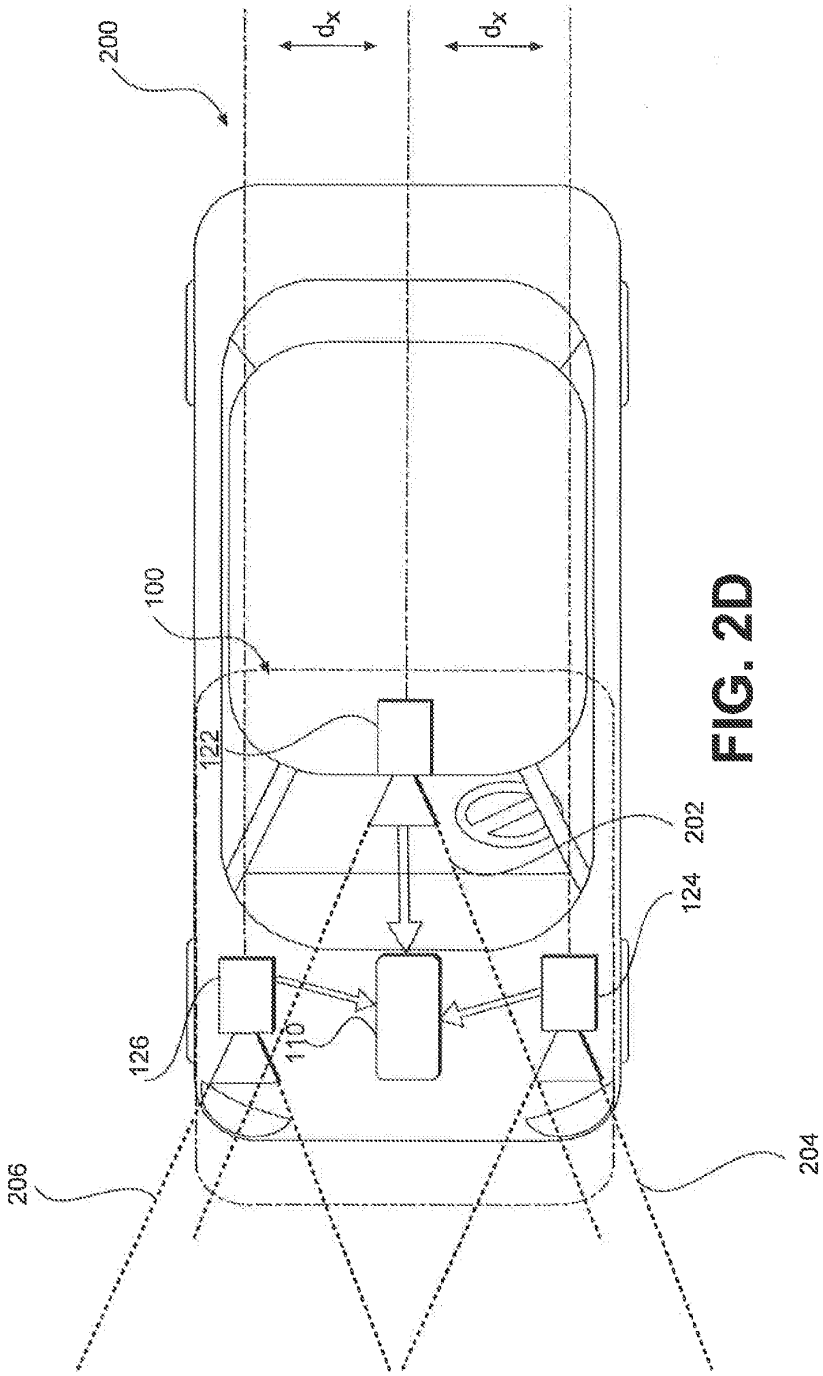

FIG. 2D

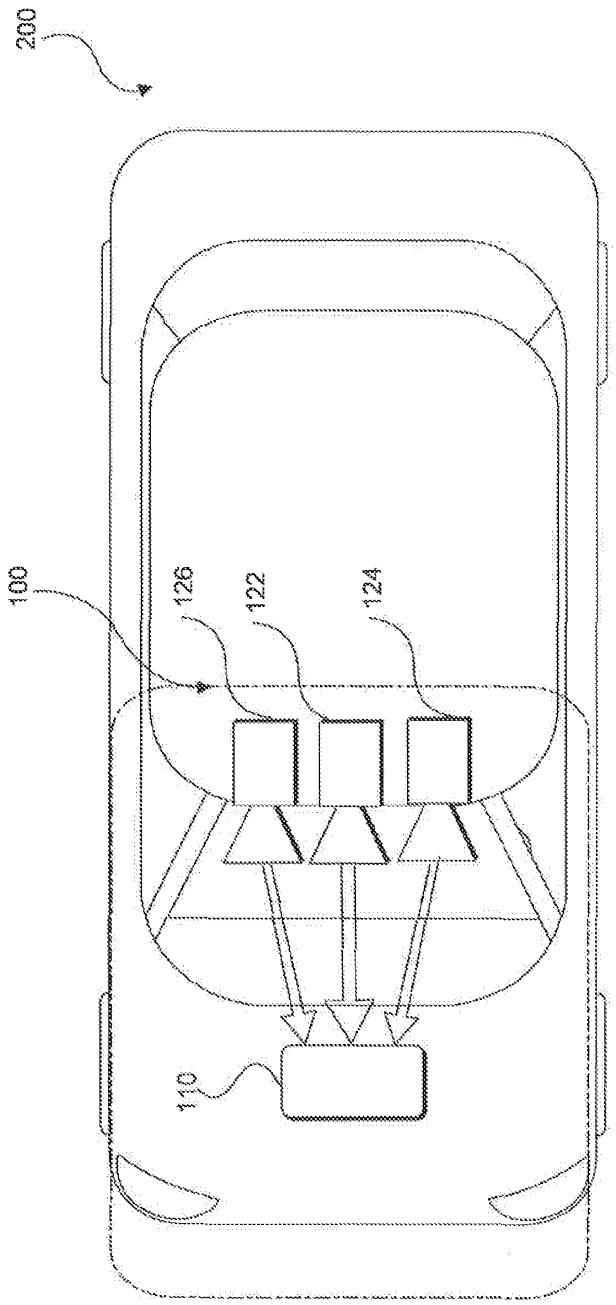

FIG. 2E

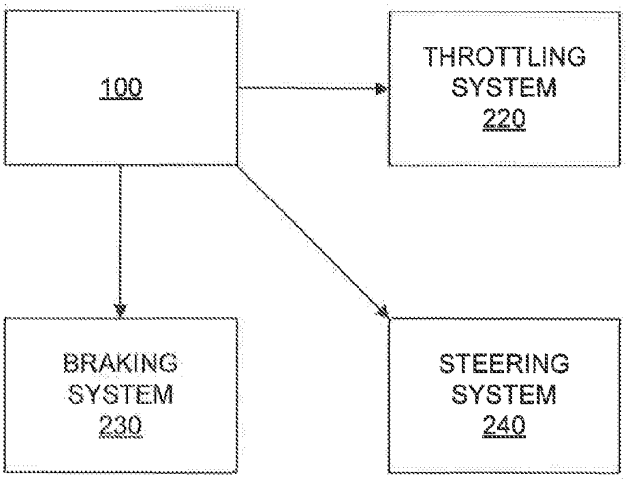
100
THROTTLING SYSTEM 220
BRAKING SYSTEM 230
STEERING SYSTEM 240

FIG. 2F

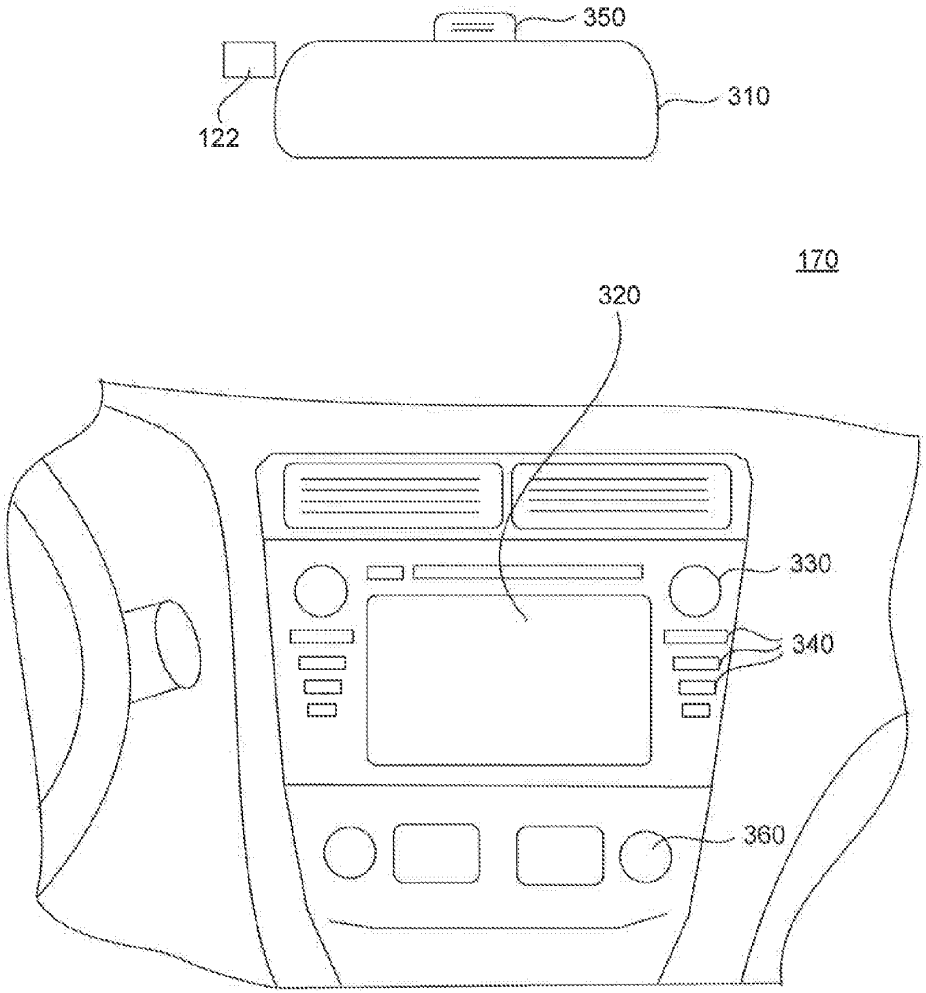

FIG. 3A

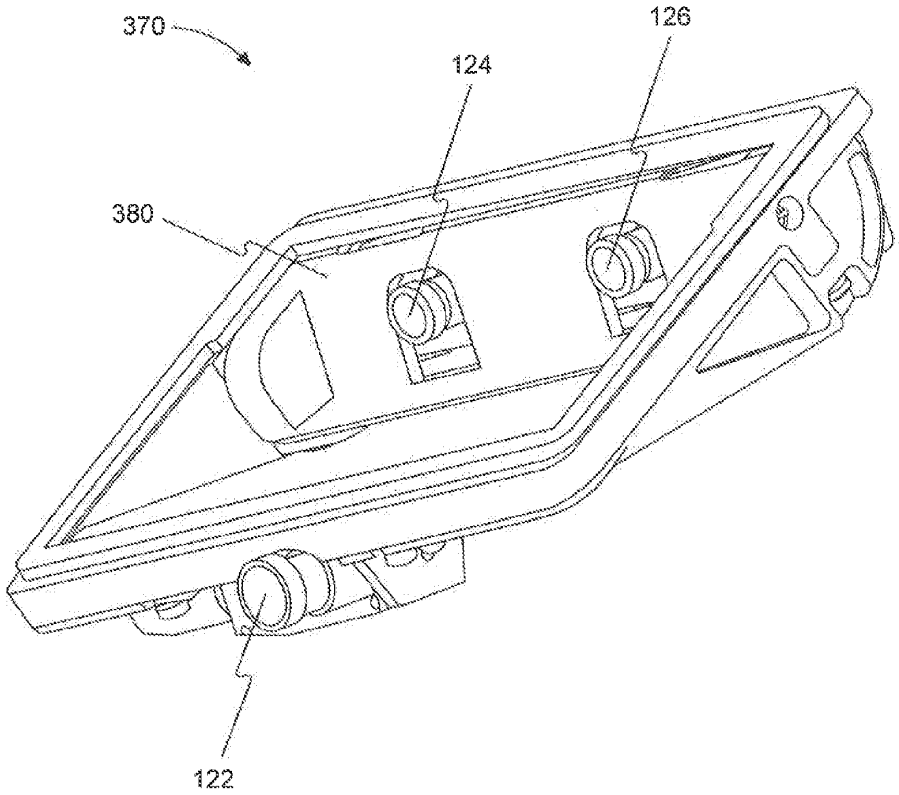

FIG. 3B

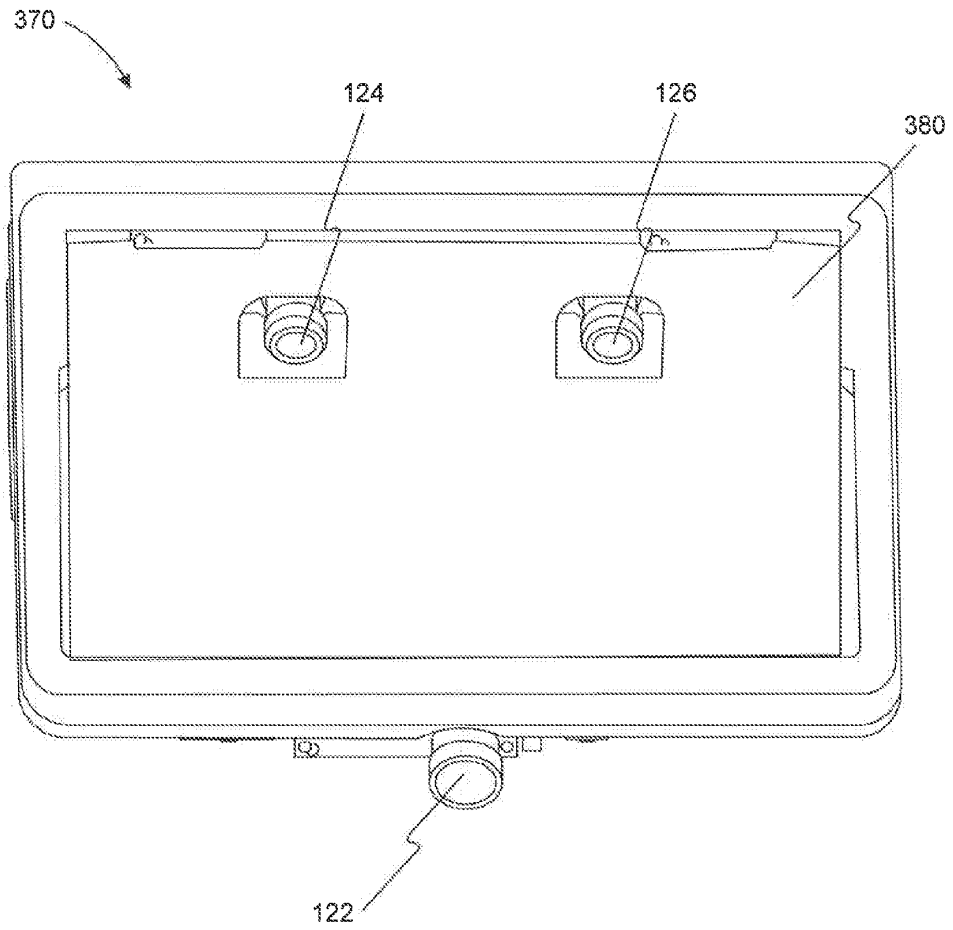

FIG. 3C

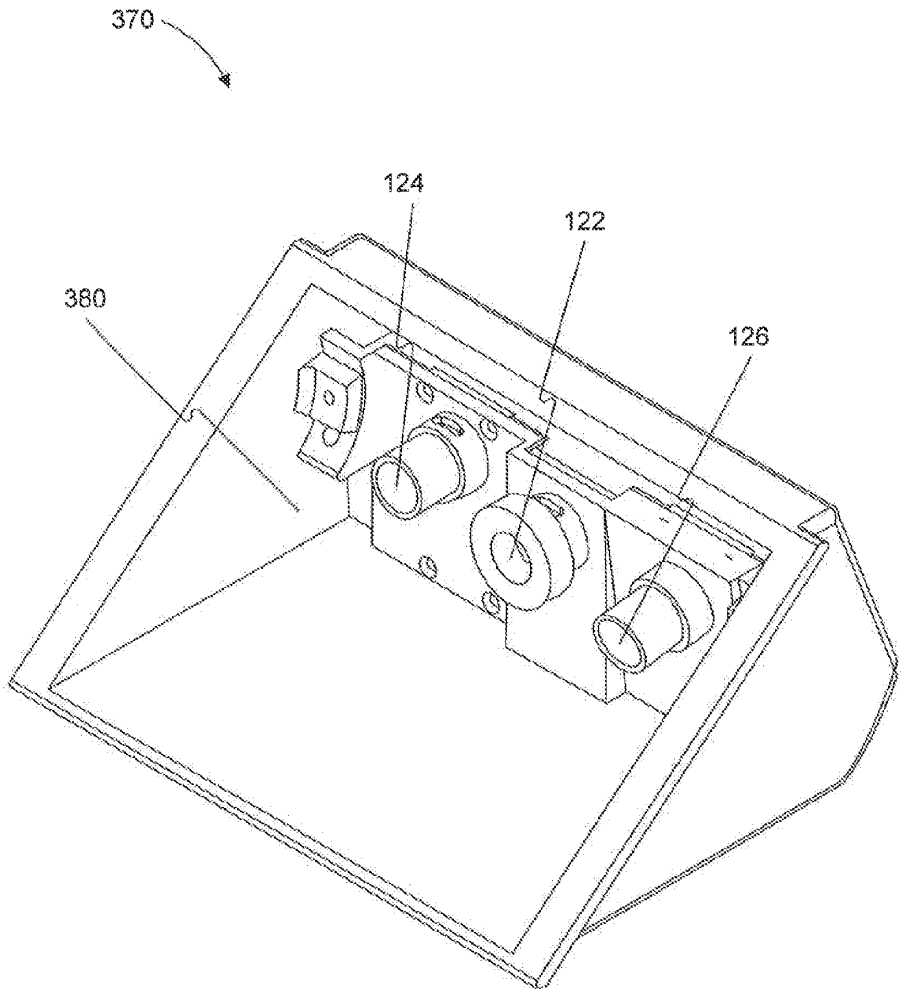

FIG. 3D

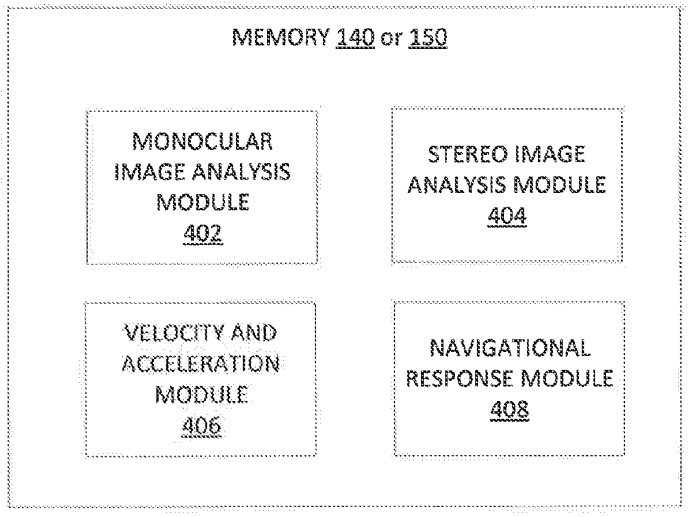
MEMORY 140 or 150
MONOCULAR IMAGE ANALYSIS MODULE 402
STEREO IMAGE ANALYSIS MODULE 404
VELOCITY AND ACCELERATION MODULE 406
NAVIGATIONAL RESPONSE MODULE 408

FIG. 4

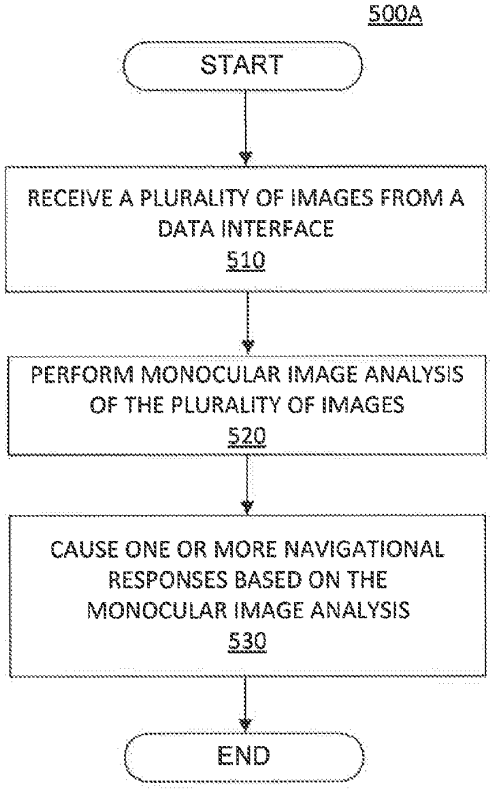
500A
START
RECEIVE A PLURALITY OF IMAGES FROM A DATA INTERFACE
510
PERFORM MONOCULAR IMAGE ANALYSIS OF THE PLURALITY OF IMAGES
520
CAUSE ONE OR MORE NAVIGATIONAL RESPONSES BASED ON THE MONOCULAR IMAGE ANALYSIS
530
END

FIG. 5A

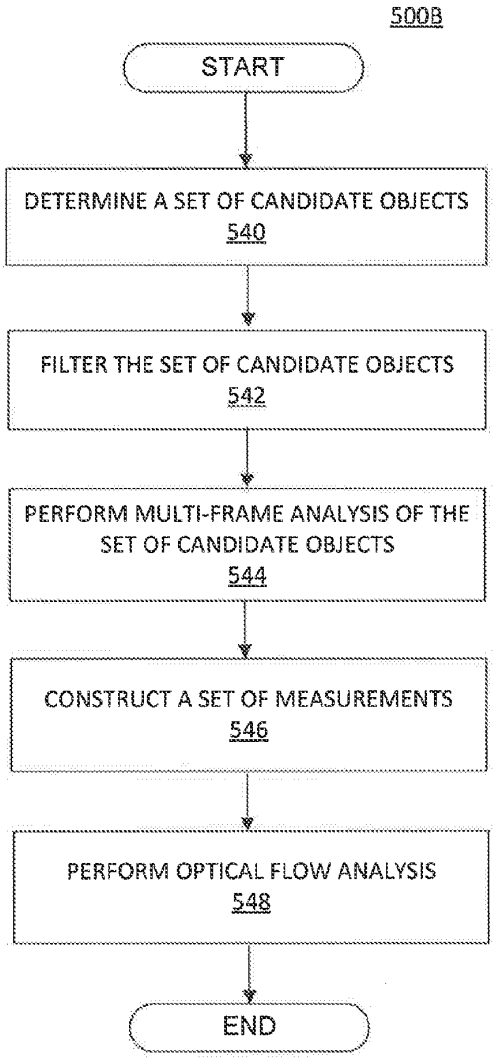
500B
START
DETERMINE A SET OF CANDIDATE OBJECTS
540
FILTER THE SET OF CANDIDATE OBJECTS
542
PERFORM MULTI-FRAME ANALYSIS OF THE SET OF CANDIDATE OBJECTS
544
CONSTRUCT A SET OF MEASUREMENTS
546
PERFORM OPTICAL FLOW ANALYSIS
548
END

FIG. 5B

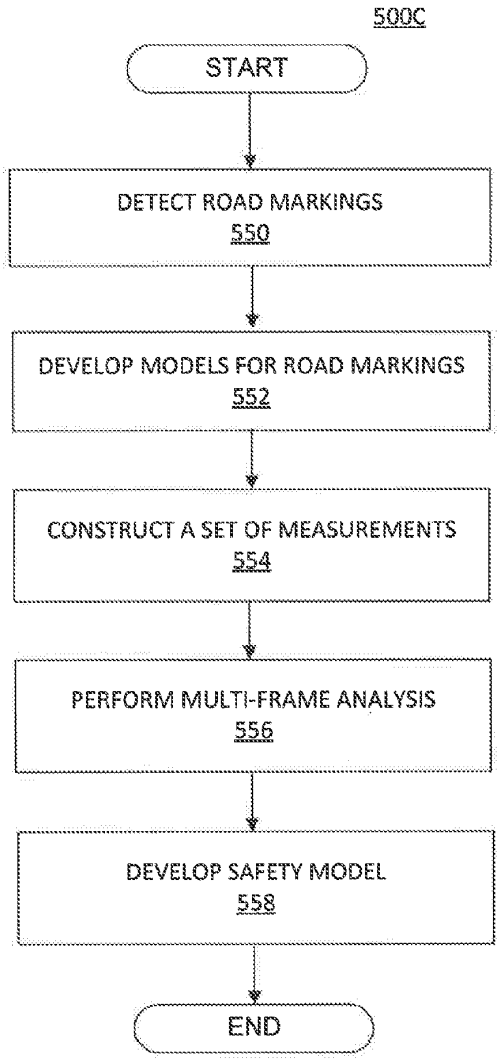
500C
START
DETECT ROAD MARKINGS
550
DEVELOP MODELS FOR ROAD MARKINGS
552
CONSTRUCT A SET OF MEASUREMENTS
554
PERFORM MULTI-FRAME ANALYSIS
556
DEVELOP SAFETY MODEL
558
END

FIG. 5C

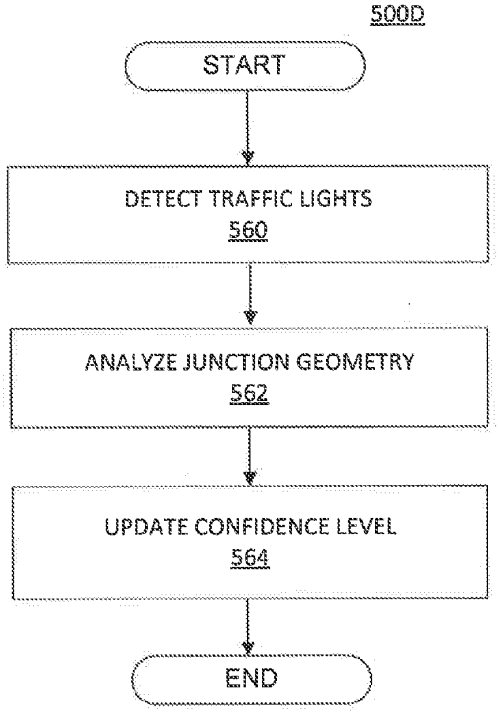
500D
START
DETECT TRAFFIC LIGHTS
560
ANALYZE JUNCTION GEOMETRY
562
UPDATE CONFIDENCE LEVEL
564
END

FIG. 5D

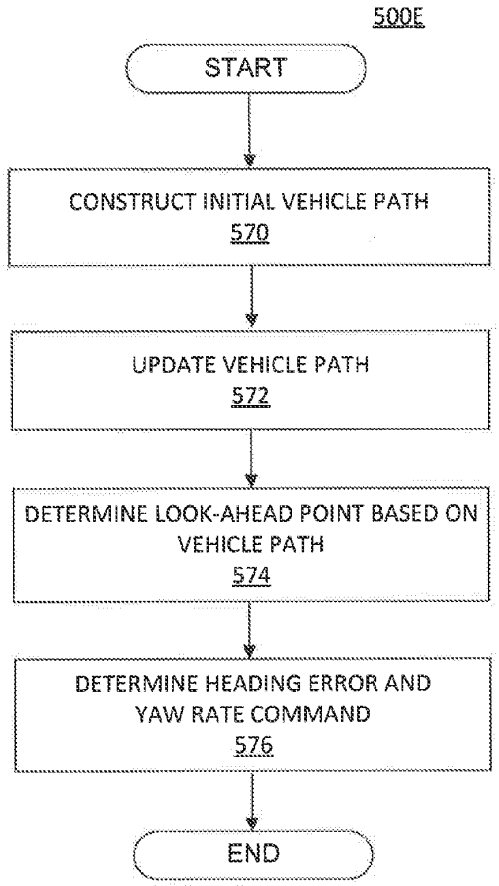
500E
START
CONSTRUCT INITIAL VEHICLE PATH
570
UPDATE VEHICLE PATH
572
DETERMINE LOOK-AHEAD POINT BASED ON VEHICLE PATH
574
DETERMINE HEADING ERROR AND YAW RATE COMMAND
576
END

FIG. 5E

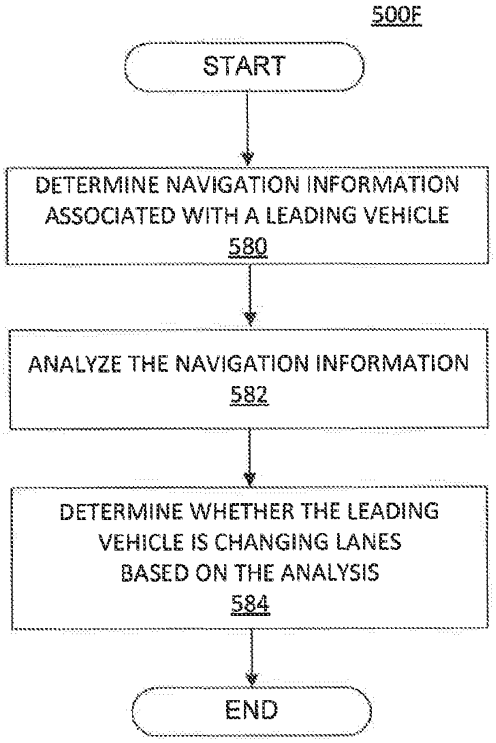
500F
START
DETERMINE NAVIGATION INFORMATION ASSOCIATED WITH A LEADING VEHICLE
580
ANALYZE THE NAVIGATION INFORMATION
582
DETERMINE WHETHER THE LEADING VEHICLE IS CHANGING LANES BASED ON THE ANALYSIS
584
END

FIG. 5F

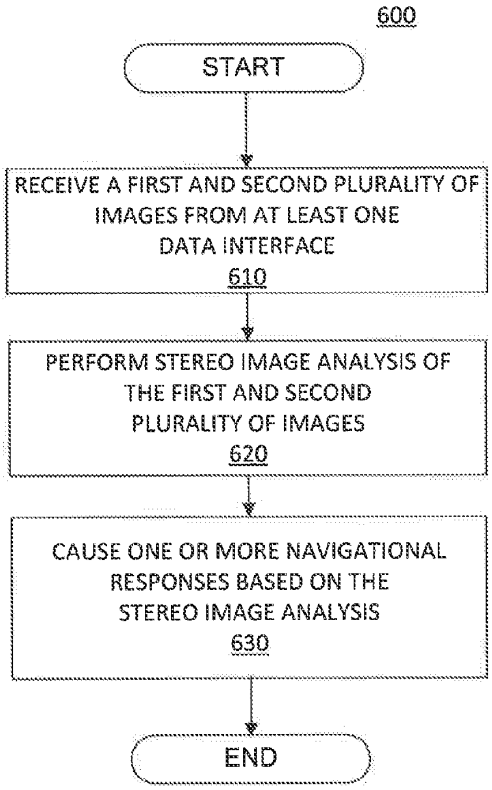
600
START
RECEIVE A FIRST AND SECOND PLURALITY OF IMAGES FROM AT LEAST ONE DATA INTERFACE
610
PERFORM STEREO IMAGE ANALYSIS OF THE FIRST AND SECOND PLURALITY OF IMAGES
620
CAUSE ONE OR MORE NAVIGATIONAL RESPONSES BASED ON THE STEREO IMAGE ANALYSIS
630
END

FIG. 6

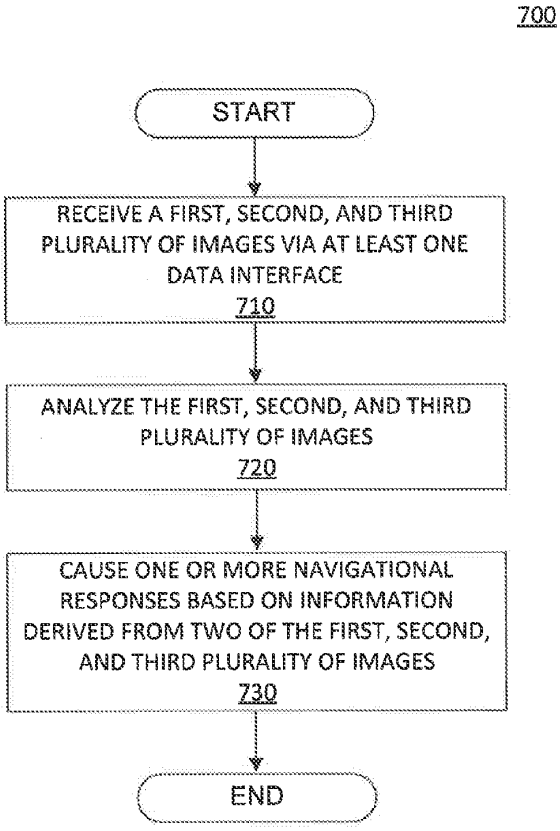
700
START
RECEIVE A FIRST, SECOND, AND THIRD PLURALITY OF IMAGES VIA AT LEAST ONE DATA INTERFACE
710
ANALYZE THE FIRST, SECOND, AND THIRD PLURALITY OF IMAGES
720
CAUSE ONE OR MORE NAVIGATIONAL RESPONSES BASED ON INFORMATION DERIVED FROM TWO OF THE FIRST, SECOND, AND THIRD PLURALITY OF IMAGES
730
END

FIG. 7

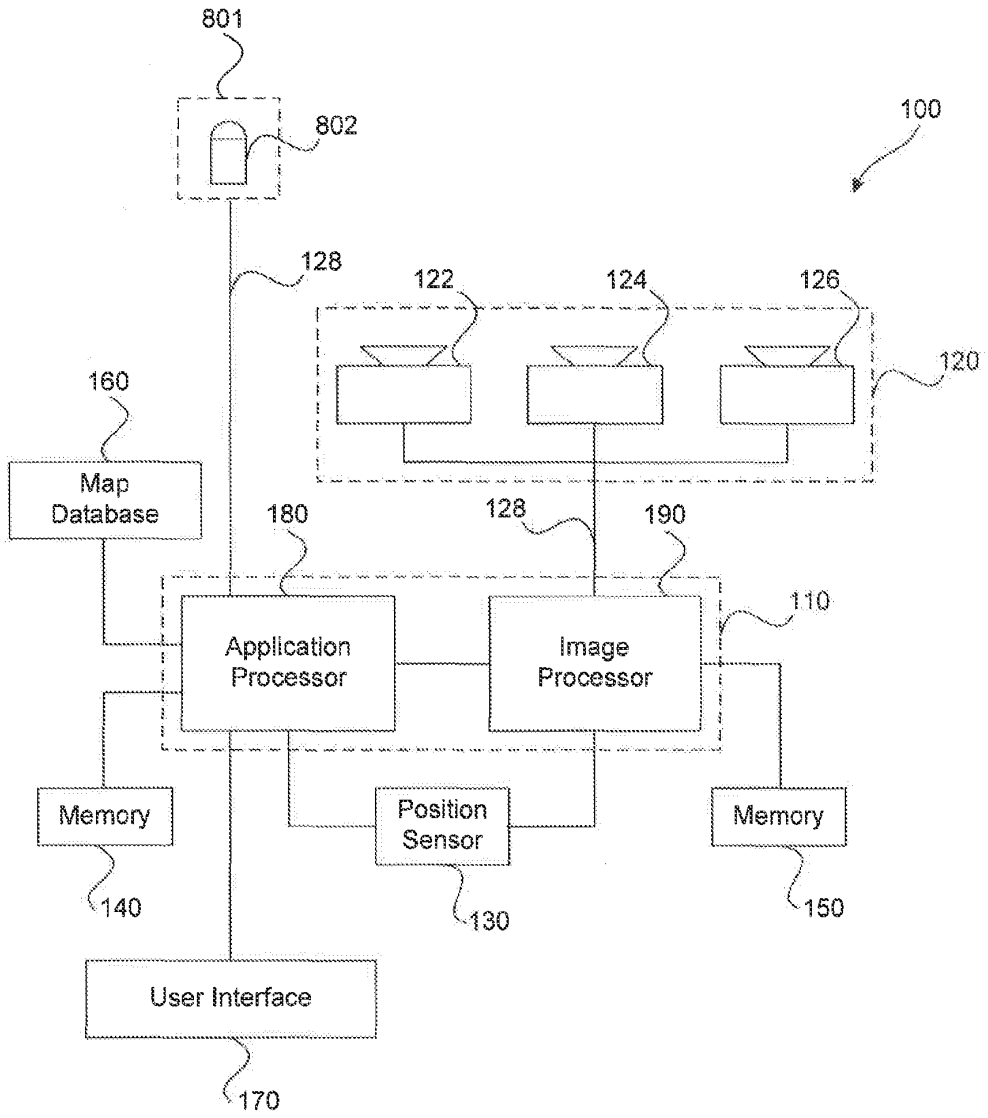
801
802
100
128
122
124
126
120
160
Map Database
180
128
190
110
Application Processor
Image Processor
Memory
Position Sensor
Memory
140
130
150
User Interface
170

FIG. 8

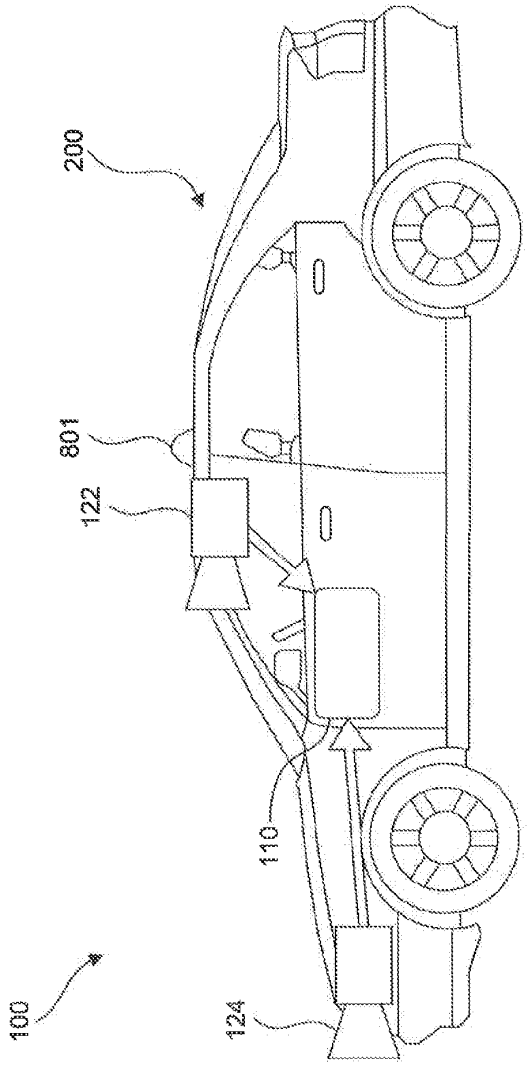

FIG. 9A

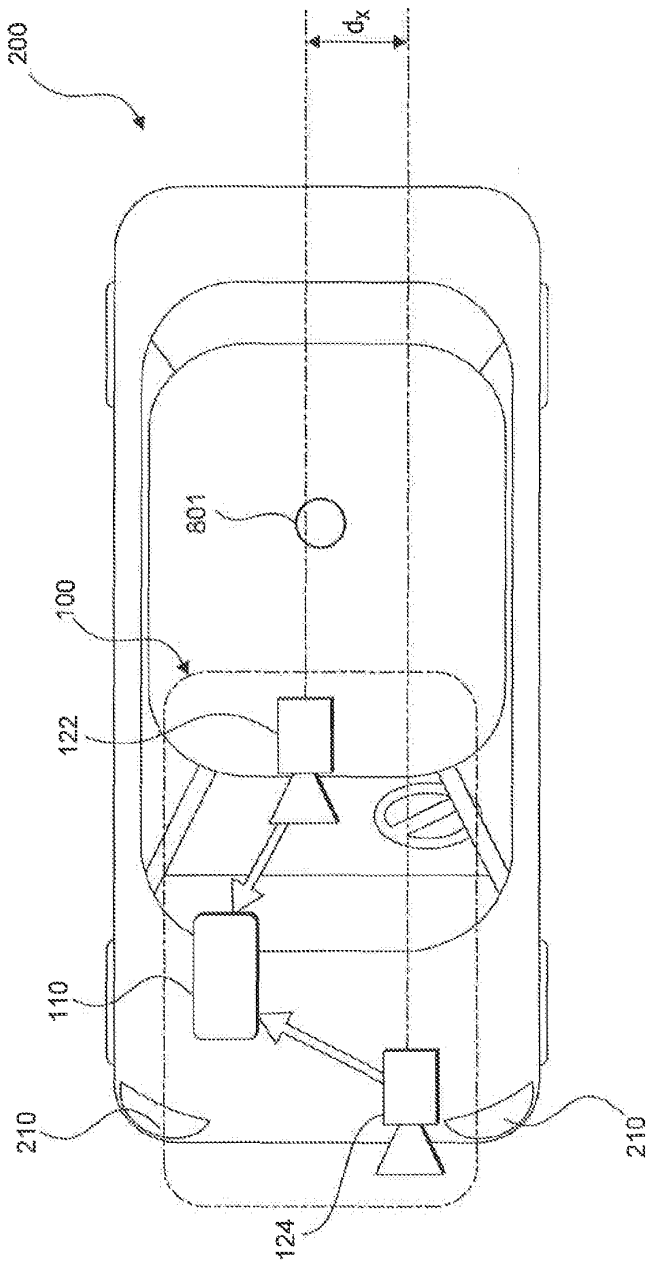

FIG. 9B

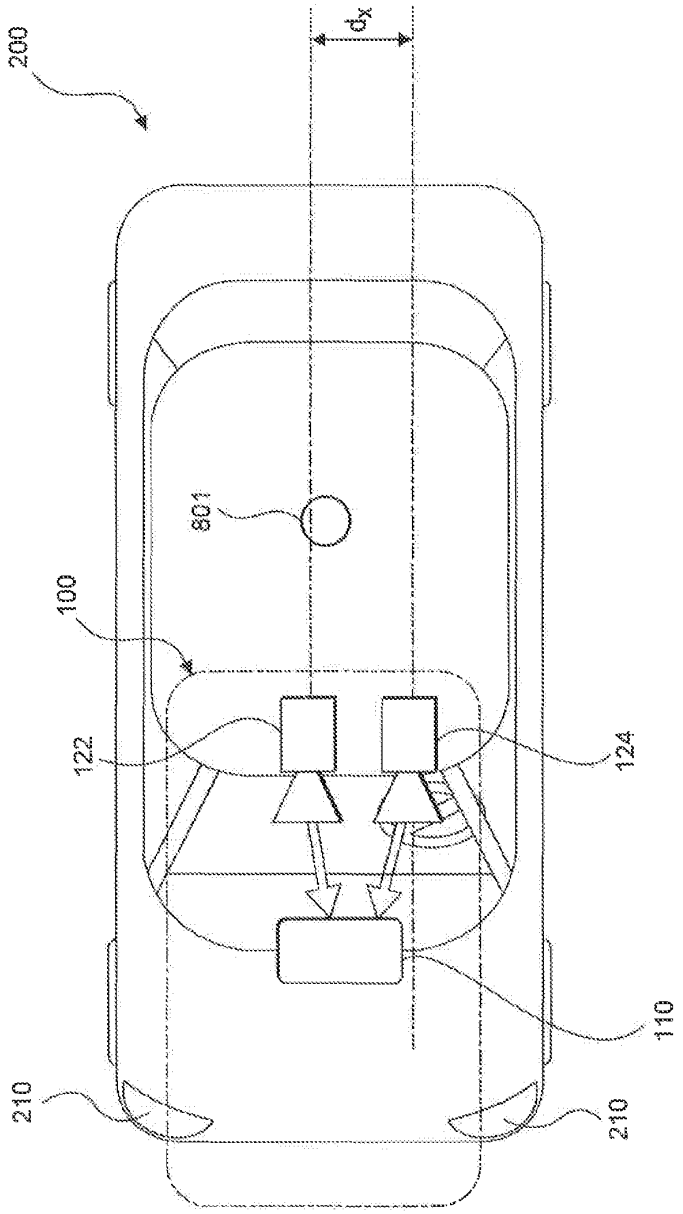

FIG. 9C

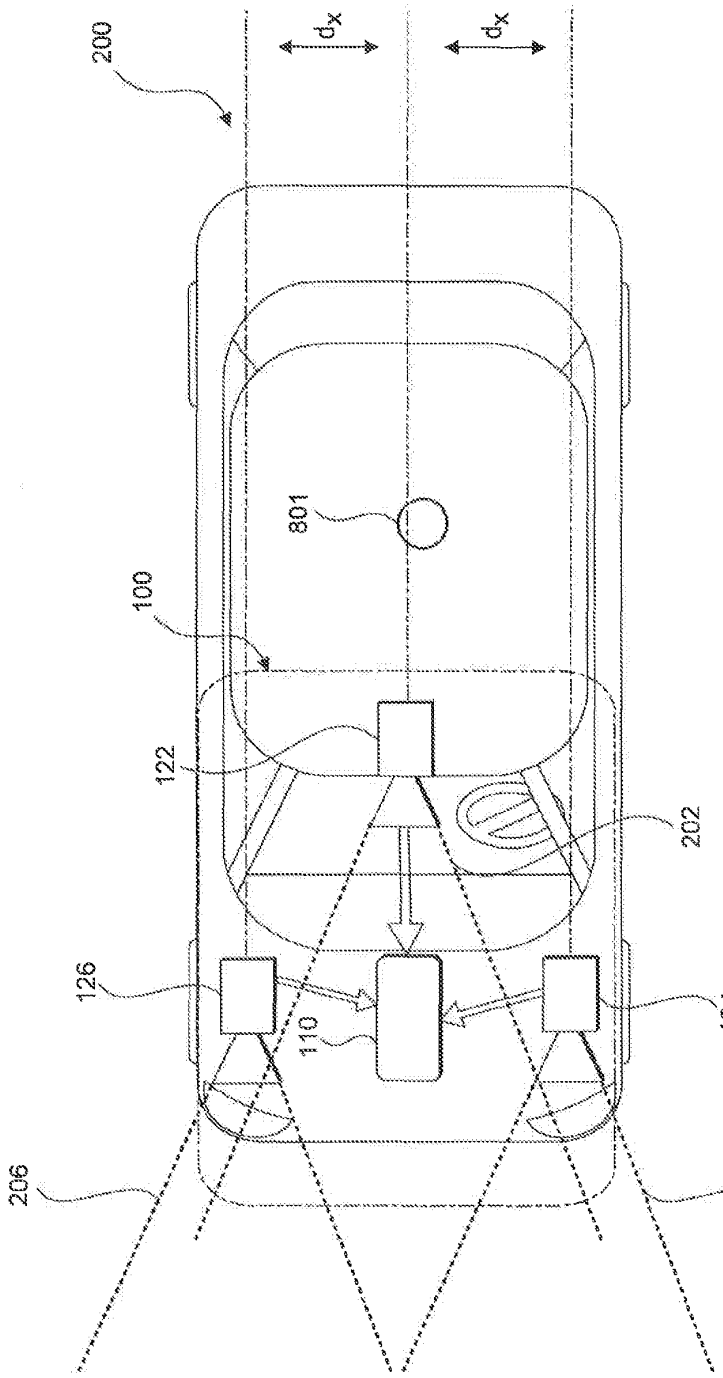

FIG. 9D

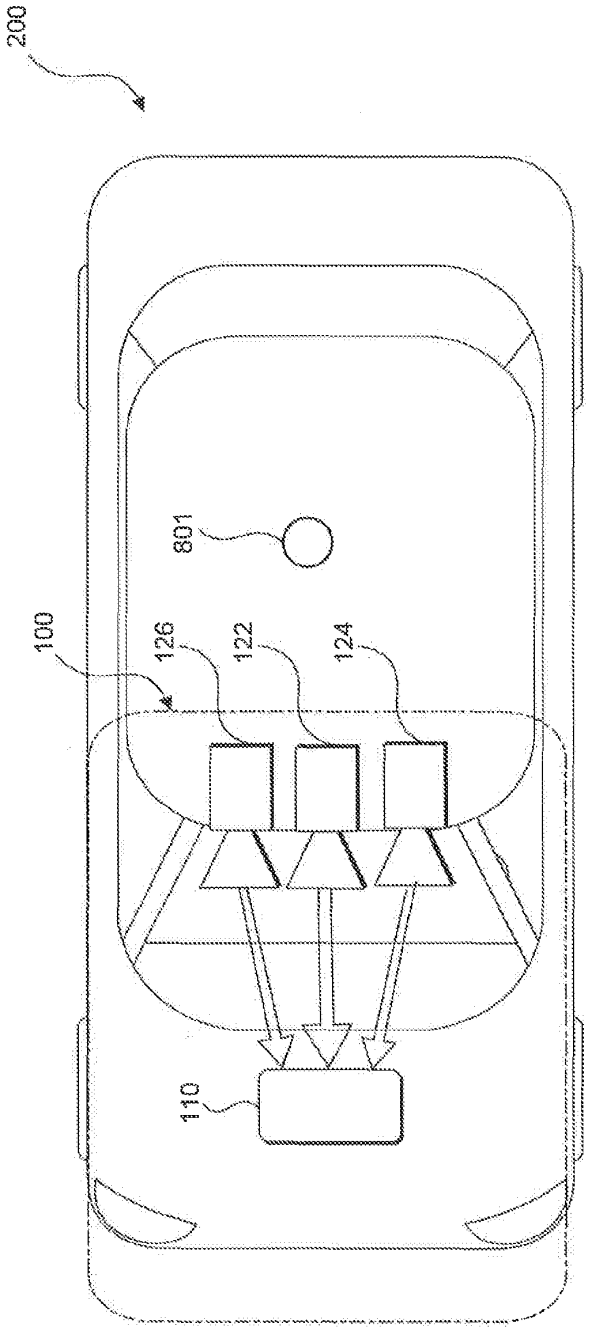

FIG. 9E

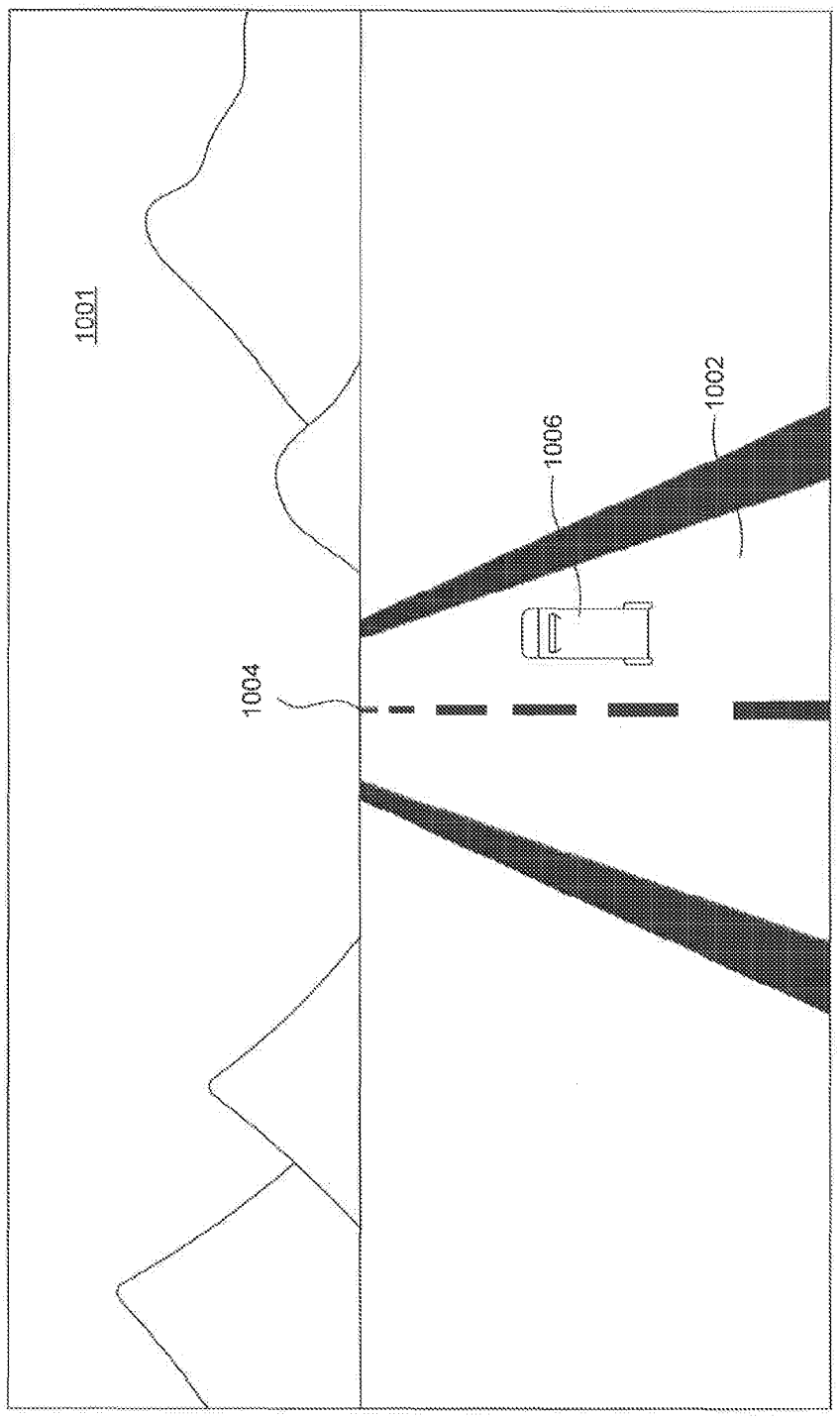

FIG. 10

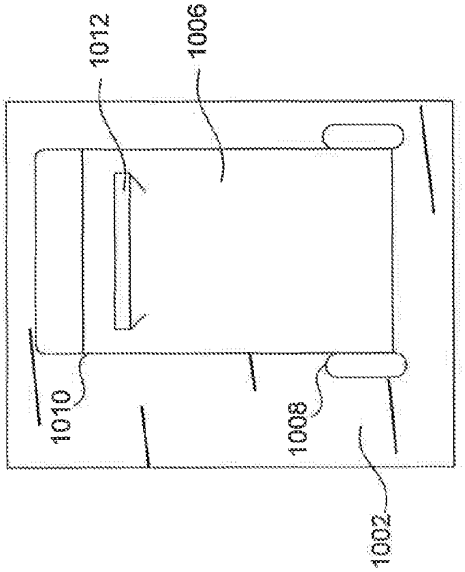

FIG. 11B

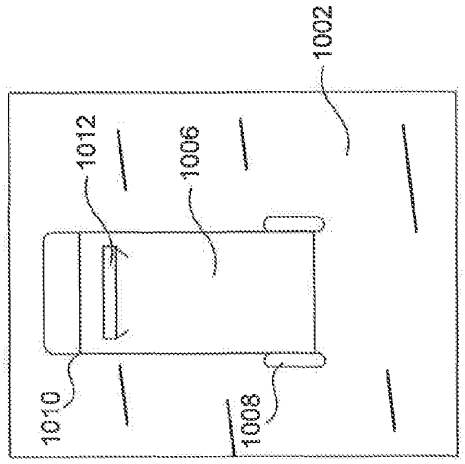

FIG. 11A

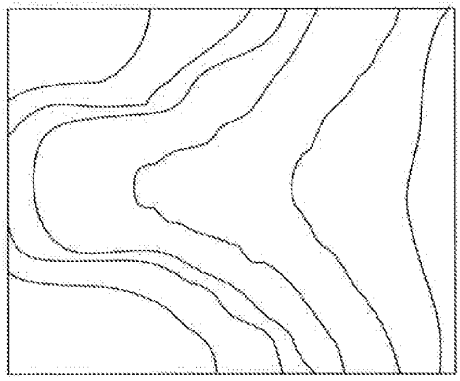

FIG. 12B

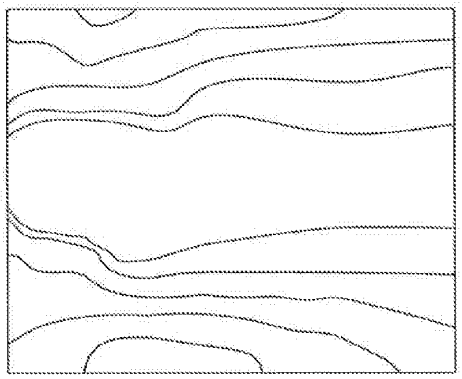

FIG. 12A

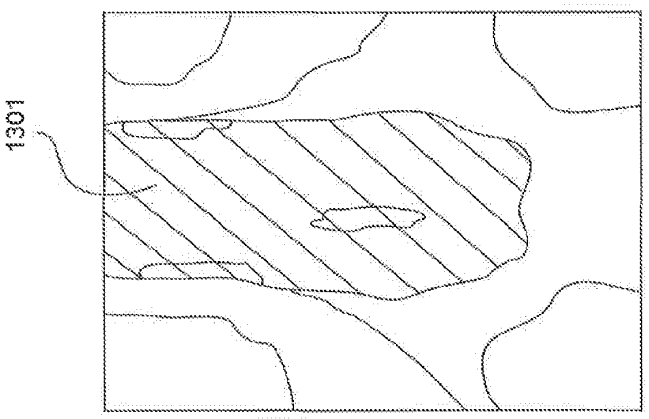

FIG. 13

(12) INTERNATIONAL APPLICATION PUBLISHED UNDER THE PATENT COOPERATION TREATY (PCT)

(19) World Intellectual Property Organization
International Bureau

(43) International Publication Date
27 August 2015 (27.08.2015)

WIPO | PCT

(10) International Publication Number
WO 2015/125022 A3

(51) International Patent Classification: *G01S 13/86* (2006.01)

(21) International Application Number: PCT/IB2015/000673

(22) International Filing Date: 20 February 2015 (20.02.2015)

(25) Filing Language: English

(26) Publication Language: English

(30) Priority Data:
61/942,088 20 February 2014 (20.02.2014) US

(71) Applicant: **MOBILEYE VISION TECHNOLOGIES LTD.** [IL/IL]; 13 Hartom Street, P.O.B. 45157, Har Hotzvim, 91450 Jerusalem (IL).

(72) Inventors: **ROSENBLUM, Kevin**; 13 Hartom Street, P.O.B. 45157, 91450 Har Hotzvim (IL). **DAGAN, Erez**; 13 Hartom Street, P.O.B. 45157, 91450 Har Hotzvim (IL).

(81) Designated States *(unless otherwise indicated, for every kind of national protection available)*: AE, AG, AL, AM, AO, AT, AU, AZ, BA, BB, BG, BH, BN, BR, BW, BY, BZ, CA, CH, CL, CN, CO, CR, CU, CZ, DE, DK, DM, DO, DZ, EC, EE, EG, ES, FI, GB, GD, GE, GH, GM, GT, HN, HR, HU, ID, IL, IN, IR, IS, JP, KE, KG, KN, KP, KR, KZ, LA, LC, LK, LR, LS, LU, LY, MA, MD, ME, MG, MK, MN, MW, MX, MY, MZ, NA, NG, NI, NO, NZ, OM, PA, PE, PG, PH, PL, PT, QA, RO, RS, RU, RW, SA, SC, SD, SE, SG, SK, SL, SM, ST, SV, SY, TH, TJ, TM, TN, TR, TT, TZ, UA, UG, US, UZ, VC, VN, ZA, ZM, ZW.

(84) Designated States *(unless otherwise indicated, for every kind of regional protection available)*: ARIPO (BW, GH, GM, KE, LR, LS, MW, MZ, NA, RW, SD, SL, ST, SZ, TZ, UG, ZM, ZW), Eurasian (AM, AZ, BY, KG, KZ, RU, TJ, TM), European (AL, AT, BE, BG, CH, CY, CZ, DE, DK, EE, ES, FI, FR, GB, GR, HR, HU, IE, IS, IT, LT, LU, LV, MC, MK, MT, NL, NO, PL, PT, RO, RS, SE, SI, SK, SM, TR), OAPI (BF, BJ, CF, CG, CI, CM, GA, GN, GQ, GW, KM, ML, MR, NE, SN, TD, TG).

Published:

— *with international search report (Art. 21(3))*

— *before the expiration of the time limit for amending the claims and to be republished in the event of receipt of amendments (Rule 48.2(h))*

(88) Date of publication of the international search report: 26 November 2015

(54) Title: ADVANCED DRIVER ASSISTANCE SYSTEM BASED ON RADAR-CUED VISUAL IMAGING

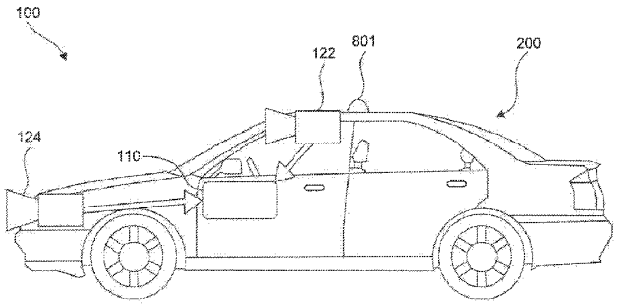

FIG. 9A

(57) Abstract: A navigation system for a vehicle may include at least one image capture device configured to acquire a plurality of images of an environment of a vehicle and a radar sensor to detect an object in the environment of the vehicle and to provide and output including range information indicative of at least one of a range or range rate between the vehicle and the object. The system may also include at least one processing device programmed to: receive the plurality of images from the at least one image capture device; receive the output from the radar sensor; determine, for each of a plurality of image segments in a first image, from among the plurality of images, and corresponding image segments in a second image, from among the plurality of images, an indicator of optical flow; use range information determined based on the output of the radar sensor together with the indicators of optical flow determined for each of the plurality of image segments in the first image and the corresponding image segments in the second image to calculate for each of a plurality of imaged regions at least one value indicative of a focus of expansion; identify a target object region, including at least a subset of the plurality of imaged regions that share a substantially similar focus of expansion; and cause a system response based on the identified target object region.

WO 2015/125022 A3

INTERNATIONAL SEARCH REPORT

International application No
PCT/IB2015/000673

A. CLASSIFICATION OF SUBJECT MATTER
INV. G01S13/86
ADD.

According to International Patent Classification (IPC) or to both national classification and IPC

B. FIELDS SEARCHED

Minimum documentation searched (classification system followed by classification symbols)
G01S

Documentation searched other than minimum documentation to the extent that such documents are included in the fields searched

Electronic data base consulted during the international search (name of data base and, where practicable, search terms used)

EPO-Internal, WPI Data

C. DOCUMENTS CONSIDERED TO BE RELEVANT

Category*	Citation of document, with indication, where appropriate, of the relevant passages	Relevant to claim No.
X	DE 10 2007 049706 A1 (BOSCH GMBH ROBERT [DE]) 23 April 2009 (2009-04-23) the whole document	1-22

A	US 2012/106786 A1 (SHIRAISHI TATSUYA [JP] ET AL) 3 May 2012 (2012-05-03) the whole document	1-22

A	US 2007/055446 A1 (SCHIFFMANN JAN K [US] ET AL) 8 March 2007 (2007-03-08) the whole document	1-22

A	DE 10 2007 049516 A1 (A D C AUTOMOTIVE DISTANCE CONT [DE]; CONTINENTAL TEVES AG & CO OHG [DE) 24 April 2008 (2008-04-24) the whole document	1-22

	-/--	

[X] Further documents are listed in the continuation of Box C.

[X] See patent family annex.

* Special categories of cited documents :

"A" document defining the general state of the art which is not considered to be of particular relevance

"E" earlier application or patent but published on or after the international filing date

"L" document which may throw doubts on priority claim(s) or which is cited to establish the publication date of another citation or other special reason (as specified)

"O" document referring to an oral disclosure, use, exhibition or other means

"P" document published prior to the international filing date but later than the priority date claimed

"T" later document published after the international filing date or priority date and not in conflict with the application but cited to understand the principle or theory underlying the invention

"X" document of particular relevance; the claimed invention cannot be considered novel or cannot be considered to involve an inventive step when the document is taken alone

"Y" document of particular relevance; the claimed invention cannot be considered to involve an inventive step when the document is combined with one or more other such documents, such combination being obvious to a person skilled in the art

"&" document member of the same patent family

Date of the actual completion of the international search	Date of mailing of the international search report
9 September 2015	16/09/2015

Name and mailing address of the ISA/	Authorized officer
European Patent Office, P.B. 5818 Patentlaan 2 NL - 2280 HV Rijswijk Tel. (+31-70) 340-2040, Fax: (+31-70) 340-3016	Rudolf, Hans

1

Form PCT/ISA/210 (second sheet) (April 2005)

INTERNATIONAL SEARCH REPORT

International application No
PCT/IB2015/000673

C(Continuation). DOCUMENTS CONSIDERED TO BE RELEVANT

Category*	Citation of document, with indication, where appropriate, of the relevant passages	Relevant to claim No.
A	US 2003/002713 A1 (CHEN YANG [US]) 2 January 2003 (2003-01-02) the whole document -----	1-22
A	JP 2013 020507 A (AISIN SEIKI) 31 January 2013 (2013-01-31) the whole document -----	1-22

1

Form PCT/ISA/210 (continuation of second sheet) (April 2005)

INTERNATIONAL SEARCH REPORT

Information on patent family members

International application No
PCT/IB2015/000673

Patent document cited in search report	Publication date	Patent family member(s)	Publication date
DE 102007049706 A1	23-04-2009	AT 501914 T	15-04-2011
		DE 102007049706 A1	23-04-2009
		EP 2200881 A1	30-06-2010
		WO 2009049976 A1	23-04-2009
US 2012106786 A1	03-05-2012	CN 102428385 A	25-04-2012
		DE 112010002047 T5	21-06-2012
		JP 4858574 B2	18-01-2012
		JP 2010271788 A	02-12-2010
		US 2012106786 A1	03-05-2012
		WO 2010133946 A1	25-11-2010
US 2007055446 A1	08-03-2007	EP 1760491 A2	07-03-2007
		US 2007055446 A1	08-03-2007
DE 102007049516 A1	24-04-2008	NONE	
US 2003002713 A1	02-01-2003	US 7327855 B1	05-02-2008
		US 2003002713 A1	02-01-2003
		WO 03001473 A1	03-01-2003
JP 2013020507 A	31-01-2013	NONE	

Form PCT/ISA/210 (patent family annex) (April 2005)

Espacenet

Bibliographic data: WO2015156146 (A1) — 2015-10-15

TRAVEL CONTROL DEVICE, ONBOARD DISPLAY DEVICE, AND TRAVEL CONTROL SYSTEM

Inventor(s): HORITA YUKI [JP]; TANIMICHI TAISETSU [JP]; OSAFUNE TATSUAKI [JP] ± (堀田　勇樹, ; 谷道　太雪, ; 長船　辰昭)

Applicant(s): HITACHI AUTOMOTIVE SYSTEMS LTD [JP] ± (日立オートモティブシステムズ株式会社)

Classification: **- international:** ***B60R16/02; B60W30/00; B60W40/04; B60W40/06; B60W50/14; G08G1/16***

- cooperative: **B60W10/04 (US); B60W10/18 (US); B60W10/20 (US); B60W30/00 (EP, US); B60W30/09 (US); B60W30/0956 (US); B60W30/12 (EP, US); B60W30/16 (EP, US); B60W30/18154 (EP, US); B60W30/18163 (EP, US); B60W40/04 (EP, US); B60W40/06 (EP, US); B60W50/14 (EP, US); G05D1/0219 (US); G05D1/0238 (US); G08G1/16 (EP, US);** B60W2050/0016 (EP, US); B60W2050/0095 (EP, US); B60W2050/143 (EP, US); B60W2050/146 (EP, US); B60W2420/52 (EP, US); B60W2520/06 (US); B60W2520/10 (EP, US); B60W2552/05 (EP, US); B60W2554/00 (EP, US); B60W2554/4041 (EP, US); B60W2555/60 (EP, US); B60W2556/50 (EP, US); B60W2710/18 (US); B60W2710/20 (US); G05D2201/0213 (US)

Application number: WO2015JP59567 20150327 Global Dossier

Priority number(s): JP20140079953 20140409

Also published as: CN106103232 (A) CN106103232 (B) EP3130516 (A1) EP3130516 (A4) EP3130516 (B1) more

Abstract of WO2015156146 (A1)

A travel control system (1) having: an onboard control device (10) installed in a vehicle (2), the onboard control device (10) controlling the traveling of the vehicle (2);

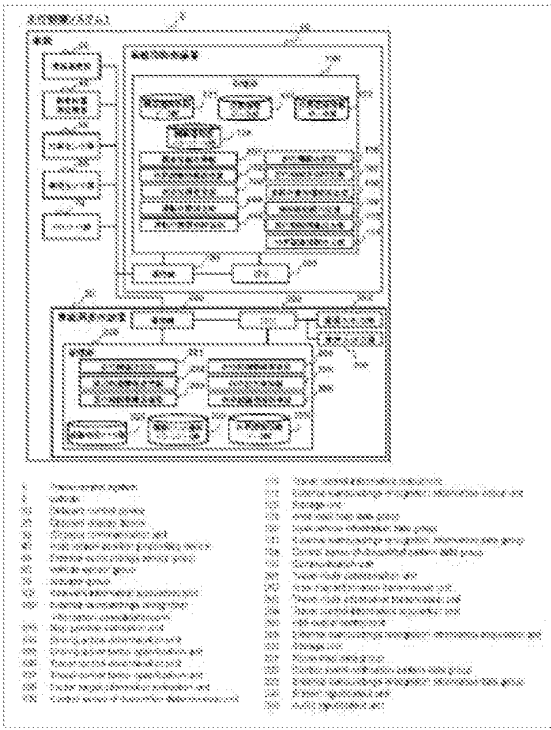

and an onboard display device (20) communicably connected with the onboard control device (10), the onboard display device (20) using a screen display and/or audio output to present information to an occupant of the vehicle (2), wherein: the onboard control device (10) acquires external surroundings recognition information recognized by an external surroundings sensor (50) and/or out-of-vehicle communication, determines driving action specifics that should be taken by the vehicle (2) on the basis of the external surroundings recognition information, specifies a driving action factor that is the reason for determining the driving action specifics, and outputs the driving action specifics and the specified driving action factor; and the onboard display device (20) acquires the driving action specifics and the driving action factor outputted by the onboard control device (10) and gives notification of the driving action specifics and the driving action factor by using a screen display and/or audio output, thereby reducing any instability and/or sense of discomfort experienced by the driver and/or occupants due to the automatic travel control of the vehicle (2).

IPR2025-01035
Tesla EX1002 Page 2352

Europäisches Patentamt
European Patent Office
Office européen des brevets

Patent Translate
Powered by EPO and Google

Notice

This translation is machine-generated. It cannot be guaranteed that it is intelligible, accurate, complete, reliable or fit for specific purposes. Critical decisions, such as commercially relevant or financial decisions, should not be based on machine-translation output.

DESCRIPTION WO2015156146A1

Driving control device, in-vehicle display device, and driving control system The present invention relates to a travel control device, an in-vehicle display device, and a travel control system.

=== Incorporation by reference === This application claims the priority of Japanese Patent Application No. 2014-79953 filed on April 9, 2014, and incorporates it into this application by referring to its contents. .. There is known a system that recognizes the situation around the vehicle by using an in-vehicle external sensor such as a radar or a camera and automatically controls the running of the vehicle. In such a system, when control is performed, there is a problem that the driver or the occupant may not be able to grasp the purpose of the control in a straightforward manner and may feel uncomfortable. In addition, in automatic driving control in which the system takes the initiative in driving, there is a problem that the driver and occupants may feel uneasy because it is not possible to grasp what kind of intention the vehicle is performing a series of driving control. be.

In this regard, Patent Document 1 discloses a technique for displaying the status of obstacles around the vehicle and the target locus of the vehicle on an in-vehicle display device. According to the technology disclosed in Patent Document 1, the situation of obstacles recognized around the vehicle and the target locus of the own vehicle are presented on an in-vehicle display device or the like to inform the driver or the occupant of the future traveling trajectory. Can be recognized.

However, although it is possible to make the driver and occupants recognize future steering control by displaying the traveling track of the vehicle, it is not possible to express the acceleration / deceleration control, so the driver and occupants still have unexpected acceleration / deceleration control. On the other hand, there is a problem that it may feel uncomfortable. In addition, since the traveling track is the result of determining the traveling control content and it is not possible to indicate for what purpose the series of traveling control is determined, the driver and the occupant still have what kind of vehicle the vehicle is. There remains the problem that people may feel uneasy because they cannot know whether they are driving on their own initiative.

In consideration of the above and other problems, one object of the present invention is to reduce the discomfort and anxiety that the automatic driving control of the vehicle gives to the driver and the occupants.

In order to solve the above problem, one aspect of the present invention is a travel control system mounted on a vehicle to control the travel of the vehicle, and is outside the own vehicle including obstacles in the course and other vehicles. The outside world recognition information acquisition unit for acquiring the outside world recognition information by receiving from the outside world sensor that captures the object of the above, or by receiving the information from the roadside by the outside vehicle communication, and the outside world recognition information acquisition unit. Based on the outside world recognition information and the own vehicle information including the position and running speed of the own vehicle, the driving action determination unit for determining the driving action content to be taken by the own vehicle, and the driving action. The driving behavior factor specifying unit for specifying the driving behavior factor that is the reason for determining the driving behavior content received from the determination unit, the driving behavior content, and the driving behavior factor specified for the driving behavior content. Information indicating the driving behavior of the vehicle, which determines the driving control content of the vehicle and the driving behavior information output unit for output, and information on the type of the selected driving behavior and the factor that selected the driving behavior. It has at least one of a driving behavior information acquisition unit that acquires the driving behavior information including the above, a display unit for displaying the driving behavior information,

IPR2025-01035
Tesla EX1002 Page 2353

and a voice output unit that outputs the contents of the driving behavior information by voice. , The driving behavior information output unit which presents the type of driving behavior included in the driving behavior information together with the driving behavior factor is provided.

According to the present invention, it is possible to reduce the discomfort and anxiety that the driver and the occupant feel about the automatic driving control.

FIG. 1 is a functional block diagram showing an example of the configuration of the traveling control system 1 according to the first embodiment of the present invention. FIG. 2 is an explanatory diagram of an example of a state transition diagram relating to travel control of the vehicle-mounted control device 10 according to the first embodiment of the present invention. FIG. 3 is an explanatory diagram of an example of the data structure of the control discomfort pattern data group 124 held by the in-vehicle control device 10 according to the first embodiment of the present invention. FIG. 4 is an explanatory diagram of an example of the data structure of the control event notification pattern data group 222 held by the vehicle-mounted display device 20 according to the first embodiment of the present invention. FIG. 5 is an explanatory diagram of a flow of travel control processing executed in the vehicle-mounted control device 10 according to the first embodiment of the present invention. FIG. 6 is an explanatory diagram of a flow of driving behavior content determination processing in a normal driving mode executed by the in-vehicle control device 10 according to the first embodiment of the present invention. FIG. 7 is an explanatory diagram of a flow of a travel control content determination process in a normal travel mode executed by the vehicle-mounted control device 10 according to the first embodiment of the present invention. FIG. 8 shows a flow of travel control information output processing executed in the vehicle-mounted control device 10 and the vehicle-mounted display device 20 according to the first embodiment of the present invention. FIG. 9 is an explanatory diagram of an example of the format of the external recognition information message output by the vehicle-mounted control device 10 according to the first embodiment of the present invention. FIG. 10 is an explanatory diagram of a flow of discomfort determination processing executed in the vehicle-mounted control device 10 of the first embodiment of the present invention. FIG. 11 is an output of the vehicle-mounted control device 10 of the first embodiment of the present invention. It is explanatory drawing of an example of the format of the control event message to perform. FIG. 12 shows a flow of HMI output content determination processing executed in the vehicle-mounted display device 20 according to the first embodiment of the present invention. FIG. 13 is an explanatory diagram of a signalized intersection scene which is an example of a specific scene for explaining the operation of the traveling control system 1 of the first embodiment of the present invention. FIG. 14 is an explanatory diagram of an example of a display method in a signalized intersection scene by the vehicle-mounted display device 20 according to the first embodiment of the present invention. FIG. 15 is an explanatory diagram of a lane change scene which is an example of a specific scene for explaining the operation of the travel control system 1 according to the first embodiment of the present invention. FIG. 16 is an explanatory diagram of an example of a display method in a lane change scene by the vehicle-mounted display device 20 according to the first embodiment of the present invention. FIG. 17 is an explanatory diagram of a flow of discomfort determination processing executed in the vehicle-mounted control device 10 according to the second embodiment of the present invention. FIG. 18 is an explanatory diagram of an example of a data structure of a control discomfort pattern data group held by the vehicle-mounted control device 10 according to the second embodiment of the present invention.

FIG. 19 is an explanatory diagram of a signalized intersection scene which is an example of a specific scene for explaining the operation of the traveling control system 1 according to the third embodiment of the present invention. FIG. 20 is an explanatory diagram of an example of a display method in a signalized intersection scene by the vehicle-mounted display device 20 according to the third embodiment of the present invention.

Hereinafter, embodiments of the present invention will be described with reference to the drawings. 1st Embodiment FIG. 1 is a functional block diagram showing an example of the configuration of the traveling control system 1 according to the 1st embodiment of the present invention.

As shown in FIG. 1, the travel control system 1 according to the present embodiment is a system mounted on the vehicle 2 that automatically controls a part or all of the travel of the vehicle 2, and includes an in-vehicle control device 10 and an in-vehicle control device 10. The display device 20, the wireless communication unit 30, the own vehicle positioning device 40, the outside world sensor group 50, the vehicle sensor group 60, the actuator group 70, and the like are included.

The in-vehicle control device 10 is, for example, an ECU (Electronic Control Unit) mounted on the vehicle 2, and has a processing unit, a storage unit 120, and a communication unit 130. The form of the in-vehicle control device 10 is not particularly limited, and may be, for example, a driving control device for realizing an advanced driver assistance system (ADAS) of the vehicle 2, or a device of the external world sensor group 50. It may be integrated into the vehicle, or it may be an external device such as a smartphone connected to the vehicle network by the user of the vehicle 2.

IPR2025-01035
Tesla EX1002 Page 2354

The processing unit is configured to include, for example, a memory such as a CPU 100 (Central Processing Unit) and a RAM (Random Access Memory), and executes a predetermined operation program stored in the storage unit 120. Then, the process of realizing the function of the in-vehicle control device 10 is performed.

The storage unit 120 includes, for example, a storage device such as an HDD (Hard Disk Drive), a flash memory, and a ROM (Read Only Memory), and is a program executed by the processing unit and a data group necessary for realizing this system. Etc. are stored. In the present embodiment, in particular, the acquisition of related information for acquiring various information (peripheral road map, travel route information, own vehicle position information, outside world recognition information, vehicle sensor information, etc.) necessary for determining the travel control of the vehicle 2. Unit 101, outside world recognition information integration unit 102 that integrates and manages object information outside the vehicle acquired from the wireless communication unit 30 and the outside world sensor group 50, map position estimation unit that estimates the position of the own vehicle and objects outside the vehicle on the road map. 103, driving behavior determining unit 104 that determines the driving behavior to be taken by the own vehicle such as turning left or right or changing lanes, driving behavior factor determined by the driving behavior determining unit 104 driving behavior factor specifying unit 105, steering Travel control decision unit 106 that determines the travel control to be taken by the own vehicle such as acceleration / deceleration, travel control factor identification unit 107 that identifies the driving control factor object determined by the travel control determination unit 106, and driving behavior factor identification unit. Factors that extract information on the factor object specified by 105 or the driving control factor specifying unit 107 The contents of the driving behavior and driving control determined by the factor object information extracting unit 108, the driving action determination unit 104, and the driving control determination unit 106 feel strange. The outside world is integratedly managed by the control discomfort determination unit 109, the travel control information output unit 110 that outputs information related to the determined driving behavior and travel control to the outside, and the outside world recognition information integration unit 102. Programs such as the external world recognition information output unit 111 that outputs recognition information to the outside, peripheral road map data group 121, own vehicle information data group 122, external recognition information data group 123, control discomfort pattern data group 124, etc. It is stored in the storage unit 120.

The peripheral road map data group 121 of the in-vehicle control device 10 is a collection of data related to a digital road map related to the road around the vehicle 2 necessary for determining driving behavior and driving control, and is, for example, a road network structure. Information such as attributes (road type, speed limit, direction of travel, etc.), shape (road lane shape, intersection shape, etc.), and landmarks (road signs, paint on the road surface, etc.) is included. In this embodiment, the peripheral road map data group 121 is acquired from the vehicle-mounted display device 20. The peripheral map information transmission unit 202 of the in-vehicle display device 20 transmits the map data of the surrounding roads required for the in-vehicle control device 10 at any time according to the position on the map of the vehicle 2 through the in-vehicle network or the like. By acquiring the related information acquisition unit 101 of the control device 10, the peripheral road map data group 121 is configured to always store the map data of the peripheral road of the vehicle 2. The management method of the peripheral road map data group 121 is not limited to the method described in this embodiment, and the entire map data may be stored in advance in the in-vehicle control device 10, or the wireless communication device 30 may be used. It may be configured to receive data from the outside of the vehicle 2 via the vehicle 2.

The vehicle information data group 122 of the vehicle-mounted control device 10 is, for example, a set of data related to the position information of the vehicle, information representing the traveling state of the vehicle that can be acquired from the vehicle sensor group 60 via the vehicle network, and the like. The body. The position information of the own vehicle represents data related to the position of the own vehicle, such as data indicating the geographical position information of the own vehicle positioned by the own vehicle positioning device 40 and the estimation result of the map position estimation unit 103. ..

The outside world recognition information data group 123 of the in-vehicle control device 10 is, for example, an obstacle (other vehicle, bicycle, pedestrian, falling object, etc.) or a feature (road sign, road sign, etc.) around the vehicle 2 acquired from the outside world sensor group 50. A set of data related to object information outside the vehicle, such as detection results of (white lines, landmarks, etc.) and information on the external environment of the vehicle 2 (other vehicle information, signal information, traffic conditions, etc.) acquired via the wireless communication unit 30. The body.

The control discomfort pattern data group 124 of the in-vehicle control device 10 is a collection of data indicating a pattern selected as the driving behavior and the traveling control are considered to give a discomfort to the driver and the occupant.

The communication unit 130 is configured to include, for example, a network card conforming to a communication standard such as Ethernet (registered trademark) or CAN (Controller Area Network), and data based on other devices mounted on the vehicle 2 and various protocols. To send and receive. The connection form between the communication unit 130 and other devices mounted on the vehicle 2 is not limited to a wired connection such as Ethernet (registered trademark), and Bluetooth (registered trademark) or wireless LAN (registered trademark) (It may be a short-range wireless connection such as Local Area Network).

IPR2025-01035
Tesla EX1002 Page 2355

The in-vehicle display device 20 is, for example, a display device mounted on the vehicle 2, and includes a processing unit, a storage unit 220, a communication unit 230, a screen input / output unit 240, and an audio input / output unit 250. Have. The form of the in-vehicle display device 20 is not particularly limited, and may be, for example, a navigation device or an external device such as a smartphone connected to the vehicle network by the user of the vehicle 2.

The processing unit includes, for example, a memory such as a CPU 200 and a RAM, and executes a predetermined operation program stored in the storage unit 220 to perform processing for realizing the function of the in-vehicle display device 20. ..

The storage unit 220 is configured to include, for example, a storage device such as an HDD, a flash memory, or a ROM, and stores a program executed by the processing unit, a data group necessary for realizing the system, and the like. In the present embodiment, in particular, a map around the vehicle 2 necessary for processing the travel route determination unit 201, which determines the route on the road map on which the vehicle 2 should travel or is recommended to travel, and the vehicle-mounted control device 10. The peripheral map information transmission unit 202 for transmitting information, the travel route information transmission unit 203 for transmitting the travel route information determined by the travel route determination unit 201 to the vehicle-mounted control device 10, and the travel control output from the vehicle-mounted control device 10. Programs such as the travel control information acquisition unit 204 that acquires information, the HMI output control unit 205 that outputs screens and sounds based on the travel control information acquired by the travel control information acquisition unit, and road map data group 221 and control. The event notification pattern data group 222, the outside world recognition information data group 223, and the like are stored in the storage unit 220.

The road map data group 221 of the in-vehicle display device 20 includes, for example, a road network structure, attributes (road type, speed limit, traveling direction, etc.), shape (road lane shape, intersection shape, etc.), and landmarks. It is a collection of data related to digital road maps including information such as (road signs, paint on the road surface, etc.). There are no restrictions on the target road map area, for example, road map data from all over the world may be included, or only road map data on a specific region or country such as Europe or the United States may be included. Only local road map data around the location of vehicle 2 may be included. In the present specification, the road means a road on which a vehicle can travel, and is not limited to a public road, and may include a private road or a driving road in a facility such as a parking lot.

The control event notification pattern data group 222 of the in-vehicle display device 20 transmits the control event information provided by the in-vehicle control device 10 to the driver or the occupant through the screen input / output unit 240 and the voice input / output unit 250. It is a collection of data showing a pattern that determines whether to notify.

The external world recognition information data group 223 of the vehicle-mounted display device 20 stores, for example, the integrated external world recognition information provided by the vehicle-mounted control device 10.

The communication unit 230 is configured to include, for example, a network card conforming to a communication standard such as Ethernet (registered trademark) or CAN, and transmits / receives data to / from another device mounted on the vehicle 2 based on various protocols. The connection form between the communication unit 230 and other devices mounted on the vehicle 2 is not limited to a wired connection such as Ethernet (registered trademark), such as Bluetooth (registered trademark) and wireless LAN. It may be a short-range wireless connection.

The wireless communication unit 30 has, for example, a long-range wireless communication standard such as LTE (Long Term Evolution), or a network card conforming to a short-range wireless communication standard such as wireless LAN or DSRC (Dedicated Short Range Communications). For example, a server that supports the running of one or more vehicles, a roadside machine installed on one or more roads, and a wireless communication unit 30, one mounted on one or more other vehicles. Alternatively, it is configured to enable data communication with at least one of communication terminals (not shown) owned by a plurality of people or the like.

The own vehicle positioning device 40 is a device that positions the geographical position of the vehicle 2 and provides the information thereof, and corresponds to, for example, a pan-earth navigation satellite system (GNSS) receiving device. The own vehicle positioning device 40 may be configured to simply provide a positioning result based on radio waves received from the GNSS satellite, or may include an external sensor group 50 such as the moving speed and traveling azimuth of the vehicle 2. It may be configured to perform position interpolation and error correction by utilizing the information that can be acquired from the vehicle sensor group 60.

The own vehicle positioning device 40 may be a device other than the GNSS receiving device as long as it is a device for positioning the geographical position of the vehicle 2. For example, the own vehicle positioning device 40 provides information for identifying the road on which the vehicle 2 is traveling from the roadside machine and information indicating the position of the vehicle 2 on the road (for example, information indicating the distance from the starting point of the road). It may be acquired

and the geographical position of the vehicle 2 may be positioned based on the acquisition. Further, the information indicating the position of the vehicle 2 acquired by the own vehicle positioning device 40 is typically coordinate values such as latitude and longitude described later, but specifies the road on which the vehicle 2 is traveling. Information other than the above may be used as long as it can be used for the purpose. For example, the information indicating the position of the vehicle 2 may be information indicating the road on which the vehicle 2 is traveling and the position on the road.

The external sensor group 50 is a sensor group capable of recognizing a certain range of obstacles (other vehicles, bicycles, pedestrians, falling objects, etc.) and features (road signs, white lines, landmarks, etc.) around the vehicle 2. Yes, for example, camera devices, radars, laser radars, sonars, and the like. The external sensor group 50 outputs the detected information on obstacles and features around the vehicle 2 (for example, relative distance and relative angle from the vehicle 2) on the vehicle-mounted network, and the vehicle-mounted control device 10 is mounted on the vehicle. It is configured so that the output result can be acquired through the network. In the present embodiment, the external sensor group 50 is configured to perform processing for detecting obstacles and features. However, the external sensor group 50 outputs data without processing, and the in-vehicle control device 10 The detection process may be performed by another device such as.

The vehicle sensor group 60 is a group of devices that detect the state of various parts of the vehicle 2 (for example, traveling speed, steering angle, accelerator operation amount, brake operation amount, etc.), and is, for example, on an in-vehicle network such as CAN. The detected state quantity is output periodically. The device connected to the vehicle-mounted network including the vehicle-mounted control device 10 is configured to be able to acquire the state quantities of various parts.

The actuator group 70 is a group of devices that control control elements such as steering, brakes, and accelerators that determine the movement of the vehicle 2. From operation information of the steering wheel, brake pedal, accelerator pedal, etc. by the driver, and from the in-vehicle control device 10. It is configured to control the movement of the vehicle 2 based on the output target control value.

The relationship between "driving behavior" and "driving control" in this embodiment will be described. The "driving behavior" in the present embodiment represents an action type indicating the purpose for which the driving subject (driver or driving control system) controls or intends to control the vehicle. Specifically, "normal driving", "left turn", "right turn", "lane change", "parking / stopping", etc. correspond to the driving behavior type.

On the other hand, the "travel control" in the present embodiment represents a characteristic series of actuator control types implemented in order to realize the purpose of driving behavior. Therefore, different driving control types can be considered depending on the target driving behavior. For example, when the driving behavior is "normal driving", "acceleration driving control", "deceleration driving control", "steady driving control", etc. can be considered as the driving control type, whereas when the driving behavior is "lane change", the driving behavior is "lane change". , "Lane maintenance driving control", "lane change driving control", etc. can be considered as the driving control type.

With the main purpose of reaching the destination, a person decides which driving action to take according to the road shape and the situation on the spot, and drives the vehicle while switching the driving action at any time (that is, the car's Controls driving). The same applies when the driving control system is the main driver, such as an automatic driving system. While recognizing the surrounding environment using sensors, etc., it is determined which driving action to take, and how the vehicle is driven based on that. It becomes a flow to decide whether to control.

FIG. 2 shows an example of a state transition diagram when the travel control system 1 executes travel control of the vehicle 2. 301 to 305 correspond to the state of "driving behavior" in the vehicle 2 (hereinafter, the state of driving behavior is referred to as "mode"), and the internal state (for example, the state of driving behavior) included in the state of the driving behavior. 311 to 313) when the driving behavior is "normal driving" corresponds to the state of "driving control" in the driving behavior.

The normal driving mode 301 means, for example, a state of driving behavior of traveling along the current road (road or lane). In the normal travel mode 301, three travel control types (states) are defined: steady travel control 311, deceleration travel control 312, and acceleration travel control 313. The deceleration running control 312 means a running control state for decelerating the vehicle, and the acceleration running control 313 means a running control state for accelerating the vehicle. The steady running control 311 represents all the states not included in the deceleration running control 312 and the accelerating running control 313. In the normal traveling mode 301, the vehicle advances along the road while switching between these traveling control states according to the conditions of the traveling environment. As described above, in the present embodiment, the "driving control" expresses a characteristic one of a series of actuator controls implemented in order to realize the purpose of the corresponding driving behavior. It means that "deceleration driving control" and "acceleration driving control" are extracted as characteristic "driving control" states. It should be noted that it is not necessary to limit the driving control type to the driving control type defined in the present embodiment, and an arbitrary driving control type can be specified according to the driving control function mounted on the vehicle 2. Further, the same can be said for the driving behavior type,

IPR2025-01035
Tesla EX1002 Page 2357

and it is not necessary to limit the driving behavior type to the driving behavior type of the present embodiment. The lane change mode may be classified finely according to the purpose such as "passing mode", or the driving behavior type may be defined by another classification axis.

The right turn mode 302 means, for example, a state of driving behavior of turning right at an intersection or the like. In the right turn mode 302, two running control types (states), a steady running control 320 and a stop control 321 are defined. The steady running control 320 is a state in which the steering angle and acceleration / deceleration are controlled according to the running track of a right turn, and the stop control 321 is an obstacle because another obstacle exists in the running track of the vehicle 2 or intersects the running track. This is a state in which an object stops and waits until it leaves or passes the traveling track of the vehicle 2. The stop control 321 corresponds to, for example, a state in which another vehicle is waiting for a right turn to enter an intersection from the oncoming lane.

The left turn mode 303 means, for example, a state of driving behavior of turning left at an intersection or the like. Similar to the right turn mode 302, the left turn mode 303 defines two travel control types, a steady travel control 330 and a stop control 331. The stop control 331 in the left turn mode 303 corresponds to, for example, a state in which the vehicle stops in front of the pedestrian crossing when a pedestrian or a bicycle is crossing the pedestrian crossing.

The lane change mode 304 means, for example, a state of driving behavior in which a lane is changed while traveling on a road having a plurality of lanes. In the lane change mode 304, two travel control types, lane keeping travel control 340 and lane change travel control 341, are defined. It is normal to maintain the current lane until the safety of entering the new lane is confirmed before moving to control of the lane change. The lane keeping driving control 340 means this control state. On the other hand, the lane change traveling 341 means a state in which the safety against entering the lane of the change destination is confirmed and the lane change is actually controlled. Then, when the lane change is successfully completed, the normal driving mode 301 is returned.

The parking mode 305 means, for example, a state of driving behavior in which the vehicle 2 is parked at a predetermined place in a parking lot or on the road. In the parking mode 305, two running control types, a steady running control 350 and a stop control 351 are defined. The steady running control 350 controls the steering angle and acceleration / deceleration according to the running track for parking, and the stop control 351 is concerned because other obstacles exist in the running track of the vehicle 2 or intersect with the running track. This is a state in which the vehicle stops and waits until the obstacle leaves or passes the traveling track of the vehicle 2.

An example of the data structure of the control discomfort pattern data group 124 of the in-vehicle control device 10 will be described with reference to FIG.

The control discomfort pattern data group 124 is a collection of data indicating information about a control event that may give a discomfort to the driver or the occupant. The control event in the present embodiment is, for example, a characteristic change in the driving behavior content or the driving control content. This corresponds to the state transition event in the state transition diagram of the driving control shown in FIG. 2, the mode level transition in FIG. 2 corresponds to the change in the driving behavior content, and the state transition inside the mode corresponds to the change in the driving control content. do.

The driving behavior type 401 and the driving control type 402 indicate the driving behavior or the driving control type to which the corresponding control event is related. When the corresponding control event represents a change in the driving behavior content, a value indicating which driving behavior mode has been entered is stored in the driving behavior type 401, and a value indicating that the driving control type 402 is not particularly limited (a value indicating that the driving behavior type 402 is not particularly limited). In the example of FIG. 3, "Any") is stored. On the other hand, when expressing a change in the driving control content, a value indicating which driving behavior mode the driving control content is changed to is stored in the driving behavior type 401, and which driving control state is transitioned to in the driving control type 402. A value indicating whether or not is stored. For example, since the first line in FIG. 3 is an event in which the driving action mode shifts to the left turn, "left turn" is stored in the driving action type 401 and "Any" is stored in the driving control type 402. Further, for example, since the ninth line in FIG. 3 is an event in which the driving control state transitions to deceleration driving in the normal driving mode, the driving action type 401 is "normal driving" and the driving control type 402 is "normal driving". "Deceleration" is stored.

Factor 403 is information regarding a factor in which the driving behavior or the state of driving control has changed. Factors of state transition include, for example, obstacles in the vicinity such as stopped vehicles, low-speed vehicles, preceding vehicles, crossers, road shapes and rules such as curves, speed limits, traffic lights, traffic jams, traffic conditions, and users. It is conceivable that it depends on the setting of. For example, in the first line in FIG. 3, a "set route" is specified as a factor for transitioning to the left turn mode, but this is a travel route to a destination set by the user or the travel control system and turns left at the relevant intersection. It means an event that transitions to the left turn mode according to the specification. For example, in the fourth line in FIG. 3, "user designation" is specified as a factor, and this is a parking instruction from the driver or

IPR2025-01035
Tesla EX1002 Page 2358

occupant via an HMI (Human Machine Interface) device such as an in-vehicle display device 20. It means an event that shifts to the parking mode by receiving it. For example, the ninth line in FIG. 3 means that the cause of the transition to the deceleration running control state in the normal running mode is a signal.

Specific condition 404 represents the condition of factor 403 to which the entry applies. For example, in the 9th line, "signal" is set as the factor 403, and at the same time, "signal state ≠ red" is set as the peculiar condition 404. That is, the entry on line 9 does not apply all decelerations caused by the signal, but only if the signal state is not red. This is because decelerating at a red light does not give a sense of discomfort, while decelerating at a green light gives a sense of discomfort. When the vehicle-mounted control device 10 acquires and uses information that the state of the signal facing from the roadside changes from blue to yellow after a certain period of time through the external sensor group 50 or the like of the vehicle 2, the vehicle 2 has a green light. It is possible to slow down. Although the condition itself is described here for the sake of simplicity, in reality, for example, a function that defines a specific condition is defined and a reference to that function is stored.

The discomfort level 405 is, for example, a numerical value of the discomfort level received by the driver or the occupant with respect to the control event defined by the driving behavior type 401, the driving control type 402, and the factor 403. This discomfort level may be set by statistically analyzing it in advance and fixedly, or for control that the driver or occupant feels discomfort via an HMI device such as an in-vehicle control device 10. You may change dynamically while learning by having them react. In the present embodiment, the discomfort level is classified into four stages (0 to 3), but there is no particular limitation as long as the discomfort level can be expressed.

An example of the data structure of the control event notification pattern data group 222 of the vehicle-mounted display device 20 will be described with reference to FIG.

The control event notification pattern data group 222 defines a pattern for determining how to notify the driver or occupant of the control event information provided from the in-vehicle control device 10 through the screen input / output unit 240 and the voice input / output unit 250. A collection of data to be shown

The driving behavior type 411, the driving control type 412, and the factor 413 correspond to 401 to 403 of the control discomfort pattern data group 124, respectively.

The voice notification setting 414 is a setting for whether or not to notify the content by voice when the control event information corresponding to the entry is received. In the present embodiment, for example, any one of "notification", "non-notification", and "unspecified" is stored. "Notification" and "non-notification" indicate that the user has explicitly set it, "notification" means to give a voice notification, and "non-notification" means not to give a voice notification. Further, "not specified" indicates that the user has not explicitly set it.

The number of notifications 415 indicates how many times the voice notification regarding the entry has been executed. This number of notifications is used when the voice notification designation 414 is "not specified", and is not used when the user explicitly sets the necessity of voice notification.

Subsequently, the operation of the travel control system 1 will be described. As a main process, the vehicle-mounted control device 10 in the travel control system 1 executes a travel control process that determines the travel control content based on the surrounding conditions of the vehicle 2 and outputs a target control value to the actuator group 70. ..

FIG. 5 shows a flow of traveling control processing 450 executed in the traveling control system 1 of the present embodiment.

The travel control determination unit 106 of the in-vehicle control device 10 first acquires the own vehicle information from the own vehicle information data group 122 after waiting for a predetermined time (step (S) 451) (step 452). The predetermined time wait here is to wait for the time until the trigger for calculating the traveling control content is applied. The trigger for calculating the travel control content may be set by a timer so that it is executed at regular intervals, or it may be applied on demand by detecting the necessity of recalculating the travel control content. The own vehicle information acquired in step 452 includes, for example, the position information of the vehicle 2, the traveling state information, the traveling route information, and the like. The position information of the vehicle 2 may be latitude / longitude information acquired from the own vehicle positioning device 40, or position information on a road map such as a road link on which the vehicle 2 exists. The traveling state information of the vehicle 2 is, for example, information acquired from the vehicle sensor group 60 or the like, such as the traveling direction or the traveling direction on the road, the speed, the acceleration, the braking state, the accelerator opening degree, the gear position, and the like. .. The travel route information of the vehicle 2 is, for example, information on a route on a road map on which the vehicle 2 determined by the travel route determination unit 201 of the vehicle-mounted display device 20 should travel or is recommended to travel. These own vehicle information is acquired from an appropriate external device or the like via the vehicle network or the like by the related information acquisition unit 101 of the in-vehicle control device 10, and is stored in the own vehicle information data group 122. For example, to explain using an example of travel route information, the travel route

IPR2025-01035
Tesla EX1002 Page 2359

information transmission unit 203 of the vehicle-mounted display device 20 outputs travel route information on the vehicle-mounted network via the communication unit 230, and related information of the vehicle-mounted control device 10. The acquisition unit 101 receives it and stores it in the own vehicle information data group 122.

Next, in step 453, the traveling control determination unit 106 of the vehicle-mounted control device 10 acquires the outside world recognition information related to the processing described later from the outside world recognition information data group 123. The outside world recognition information data group 123 stores information on object information outside the vehicle appropriately acquired from the outside world sensor group 50, the wireless communication unit 30, and the like by the related information acquisition unit 101. For example, an obstacle around the vehicle 2 is stored. It includes detection results of objects and features, information on the external environment of the vehicle 2 acquired via the wireless communication unit 30, information on other vehicles, signal information, traffic conditions, and the like.

When step 453 is completed, the process proceeds to the driving action content determination process (S454) for determining the driving action content to be taken based on the information acquired in step 452 and step 453. The driving behavior content determination process corresponds to the process of determining the state transition between modes in the state transition diagram of the traveling control of FIG. Therefore, the logic of the driving behavior content determination process differs depending on which driving behavior mode.

As a specific example of the driving action content determination process, FIG. 6 shows a driving action content determination process flow 550 in the normal driving mode.

The driving behavior determination unit 104 of the in-vehicle control device 10 first confirms whether or not the mode is specified by the user (step 551). When the driving control system 1 is configured so that the driver or the occupant can specify the driving action to be taken by the driving control system 1 using the HMI device such as the in-vehicle display device 20, the driving action is specified by the user. And step 551 is Yes. Then, in step 561, the driving behavior determining unit 104 changes the current driving behavior mode to the user-designated mode, and at the same time, the driving behavior factor specifying unit 105 sets the driving behavior determining factor to "user-specified". Then, the process proceeds to step 571, and the factor object information extraction unit 108 extracts the object information related to the set driving behavior deciding factor and ends the process. Here, the object corresponds to an object included in the outside world recognition information acquired in step 453 of the travel control processing flow 450. In this case, the driving behavior determinant is "user-specified", and since there is no particularly applicable object, an empty set is set in the object information.

Automatic parking can be considered as an example of the user's designation of driving behavior. When the driver automatically parks the vehicle 2, an instruction for automatic parking is issued to the travel control system 1 via the HMI of the in-vehicle display device 20 or the like. The in-vehicle control device 10 receives the instruction information via the communication unit 130, sets the mode designation information to the "parking mode", and stores it in the storage unit 120. In step 551, by referring to this mode designation information, the driving behavior determination unit 104 recognizes that the parking mode is designated by the user, proceeds to step 561, and performs the processing as described above.

Returning to step 551, when the user does not specify the driving behavior (No in step 551), it is confirmed in step 552 whether the vehicle 2 has reached the planned parking point. The planned parking point is, for example, the final or intermediate destination set in the traveling route in automatic driving or the like. In that case, whether or not the destination has been reached is the criterion for determining step 552. When it is determined in step 552 that the planned parking point has been reached, the driving behavior determining unit 104 changes the current driving behavior mode to the parking mode 305 in step 562, and at the same time, the driving behavior factor specifying unit 105 sets the driving behavior determining factor to "setting route". Set to. Here, the "set route" means that when the traveling route is determined in advance in automatic driving or the like, the driving action content is determined according to the instruction. Whether or not the vehicle has reached the planned parking point may be determined by, for example, whether or not the distance between the position of the vehicle 2 and the planned parking point on the route is less than a certain value, or the estimated arrival time to the planned parking point is less than a certain value. You may judge whether or not it has become. When step 562 is completed, the process proceeds to step 571, and the factor object information extraction unit 108 extracts the object information related to the set driving behavior determinant and ends the process. In this case, since there is no particularly applicable object, an empty set is set in the object information.

Returning to step 552, if the vehicle 2 has nothing to do with the planned parking point (No in step 552), it is confirmed in step 553 whether the vehicle 2 has reached the planned left turn point. Similar to the planned parking point in step 552, it is determined whether or not the vehicle has approached the point where the left turn is instructed on the set driving route, and if applicable (Yes in step 553), the driving action mode is turned left in step 563. At the same time as changing to the mode 303, the driving behavior determinant is set to the "setting route", and the process proceeds to step 571.

IPR2025-01035
Tesla EX1002 Page 2360

In step 553, if the vehicle 2 has nothing to do with the planned left turn point, the process proceeds to step 554, and the same process is performed for the planned right turn point. If the vehicle 2 has nothing to do with the planned right turn point in step 554, the process proceeds to step 555, and the same processing is performed for the planned lane change point.

Next, the process proceeds to step 556, and it is confirmed whether or not there is a parked / stopped vehicle in the same lane ahead. Whether or not a parked vehicle exists is determined by, for example, whether or not another vehicle is stopped in the traveling lane of the vehicle 2 based on the outside world recognition information data group 123 obtained from the wireless communication unit 30 or the outside world sensor group 50. It can be judged by checking. Here, even if the parked and stopped vehicles are on the same lane, if only a part of the parked and stopped vehicles protrudes and the vehicle 2 can pass on the same lane without any problem, the parked and stopped vehicles are the same. It is not considered to be in the lane. If there is a parked / stopped vehicle, the driving behavior mode is changed to the lane change mode 304, and at the same time, the driving behavior determinant is set to "parked / stopped vehicle", and the process proceeds to step 571. In step 571, the information of the corresponding parked / stopped vehicle is extracted by referring to the outside world recognition information data group 123.

If there are no parked / stopped vehicles in the same lane in step 556, the process proceeds to step 557 to check whether a low-speed vehicle exists in the same lane. Whether or not a low-speed vehicle exists is determined by referring to the data of the vehicle traveling in front of the same lane of the vehicle 2 from the outside world recognition information data group 123 and the data of the surrounding environment in the same manner as in step 556, and the traveling environment (speed limit). , Road congestion, traffic rules, etc.) It is judged by checking whether there is a vehicle traveling at a lower speed than necessary. If a low-speed vehicle exists, the driving behavior mode is changed to the lane change mode 304, and at the same time, the driving behavior determinant is set to "low-speed vehicle", and the process proceeds to step 571. In step 571, the information of the corresponding low-speed vehicle is extracted with reference to the outside world recognition information data group 123.

If there is no low-speed vehicle in the same lane in step 557, the process proceeds to step 580 and the driving behavior mode is set to the normal driving mode 301. That is, this means that the driving behavior mode is not changed. Then, after the processing in step 580 is completed, the processing flow is terminated.

As shown above, the driving action content determination processing flow 550 is a logic tree for determining the state transition of the driving action mode. Therefore, in the example of FIG. 6, an example of the state transition determination of the normal driving mode 301 is shown, but as a matter of course, a different logic tree exists in other driving behavior modes. Further, the state transition determination of the normal driving mode 301 is not limited to the content shown in the driving action content determination processing flow 550, and an arbitrary logic tree is possible. Among them, in the present embodiment, what is particularly characteristic of the driving behavior content determination processing flow 550 is that the factor that caused the state transition determination is specified (steps 561 to 567), and the information of the object is obtained. It is a point to be extracted (step 571).

Returning to the traveling control processing flow 450 of FIG. When the driving action content determination process of step 454 is completed, the travel control content determination process (step 455) is then executed. The travel control content determination process is a process of determining the travel control content based on the driving behavior mode determined in the driving behavior content determination process (step 454), and is a state inside the mode in the state transition diagram of the travel control of FIG. Corresponds to the process of determining the transition. Therefore, the logic of the driving control content determination process differs depending on which driving action mode.

As a specific example of the travel control content determination process, FIG. 7 shows an example of the travel control content determination process flow 600 in the normal travel mode.

The travel control determination unit 106 of the vehicle-mounted control device 10 first calculates a target trajectory based on the own vehicle information and the outside world recognition information acquired in steps 452 and 453 of the travel control processing flow 450 (step 601). The calculation of the target trajectory is performed, for example, according to the method described in Patent Document 1. Next, the target steering angle and the target vehicle speed are calculated based on the target trajectory calculated in step 601 (steps 602 and 603, respectively). In a known travel control device, the travel control process is completed by calculating the control target values in these actuator groups 70, but the present embodiment is characterized in that it includes a logic for determining a state change of the subsequent travel control. ..

In steps 604 and 605, it is determined whether the target vehicle speed calculated in step 603 is smaller than α (variable) or larger than α (variable) with respect to the current vehicle speed. When the target vehicle speed is α or more smaller than the current vehicle speed (Yes in step 604), it means that the vehicle 2 is decelerating, and the next travel control state is set to "deceleration travel" (step 606). .. This corresponds to the decelerated running state 311 of the normal running mode 301 in the state transition diagram of FIG. On the other hand, when the target vehicle speed is α or more higher than the current vehicle

IPR2025-01035
Tesla EX1002 Page 2361

speed (Yes in step 605), it means that the vehicle 2 is accelerating, and the next driving control state is set to "accelerated driving" (step). 607). This corresponds to the accelerated running state 312 of the normal running mode 301 in the state transition diagram of FIG. When the target vehicle speed is within the range of ± α with respect to the current vehicle speed (No in step 605), the next travel control state is set to "steady travel" (step 608). The variable α may be a constant value, or may be changed according to the current vehicle speed value, for example, the larger the current vehicle speed is, the larger the α value is, and the road attribute and surrounding obstacles may be changed. , The weather, visibility, etc. may be changed.

When the next travel control state is determined, the travel control determination unit 106 compares with the current travel control state in step 609 and confirms whether or not the travel control state has changed. When the change occurs, the travel control factor identification unit 107 identifies the factor of the travel control state change, that is, the main factor that determines the target vehicle speed, and further refers to the outside world recognition information data group 123 to become the main factor. Extract the information of the object (step 610). Although not described in the processing flow 600, in step 603, the target vehicle speed is, for example, an obstacle (for example, another vehicle, a pedestrian, a falling object, etc.) or a road shape (for example, a curve, etc.) in the traveling route or the target track. It is calculated by evaluating appropriate vehicle speeds for intersections, merging, branching, width reduction, etc.) and traffic regulations (for example, traffic lights, speed limits, etc.) and integrating them. In that case, the main factor that determines the target vehicle speed can be extracted by comparing the calculated target vehicle speed with the calculated result for each object. For example, suppose that there is a signal at an intersection with another vehicle (preceding vehicle) on a travel path with a speed limit of 50 km / h. When the optimum vehicle speed calculated for other vehicles is 50 km / h and the optimum vehicle speed calculated for the signal at the intersection is 30 km / h, the lowest value of 30 km / h is the target vehicle speed. In this case, since the signal at the intersection is the main factor that determines the target vehicle speed, in step 610, the "signal" is extracted as the factor for changing the traveling control state, and the information of the signal is extracted as the object information. In the processing flow 600, the cause of the change in the traveling control state is described again in step 610, but as described above, the main factor for which the target vehicle speed is determined in advance in the target vehicle speed calculation process (step 603) is extracted. However, the process may be made more efficient by referring to it in step 610.

In this embodiment, since the driving control state in the normal driving mode is defined by focusing only on acceleration / deceleration, the change in the rotation direction is not described. However, the present invention is not limited to the state change in the acceleration / deceleration direction, and even if the traveling control state regarding the rotation direction is newly defined and the processing flow for confirming the state change in the rotation direction is included as in the target vehicle speed. good.

As shown above, the travel control content determination process flow 600 is a process of calculating the target control value and detecting the change in the travel control state defined in the state transition diagram of FIG. Therefore, in the example of FIG. 7, an example of the driving control content determination process in the normal driving mode 301 is shown, but as a matter of course, the other driving behavior modes having different driving control states inside have different driving control contents. It becomes a decision processing flow. On the other hand, since the framework for calculating the target control value and detecting the change in the driving control state in the driving behavior mode does not change, the description of the driving control content determination processing flow in the other driving behavior modes is omitted.

Returning to the traveling control processing flow 450 of FIG. When the travel control content determination process (step 455) is completed, the travel control information output unit 110 transmits the target control value calculated in step 455 from the communication unit 130 to the actuator group 70 via the vehicle network or the like. After that, the actuator group 70 realizes the traveling control of the vehicle 2 by appropriately controlling the operation of the vehicle 2 according to the received target control value.

Next, the process proceeds to the traveling control information output process in step 457. An example of the traveling control information output processing flow 650 will be described with reference to FIG.

In the travel control information output process, two types of information are output: the outside world recognition information held by the in-vehicle control device 10 and the control event information at the time of the control event. The former is information for the device such as the in-vehicle display device 20 to constantly grasp the situation outside the vehicle and is transmitted every time, while the latter is information for notifying the user of the information of the control event. Sent only when a control event occurs.

First, in step 681, the outside world recognition information output unit 111 of the vehicle-mounted control device 10 extracts the outside world recognition information related to the traveling control from the outside world recognition information data group 123. The outside world recognition information related to the driving control is, for example, the outside world recognition information used for judgment in the driving action content determination process or the driving control content determination

IPR2025-01035
Tesla EX1002 Page 2362

process. Alternatively, it may be the recognized object information within a certain distance range from the vehicle 2, or it may be the recognized object information that may intersect the traveling path of the vehicle 2.

Next, the outside world recognition information output unit 111 generates an outside world recognition information message 671 based on the related outside world recognition information extracted in step 681, and outputs the generated message from the communication unit 130 to the vehicle-mounted network or the like (step 682). ..

FIG. 9 is an explanatory diagram of an example of the format 720 of the outside world recognition information message 671 transmitted by the vehicle-mounted control device 10 of the present embodiment. However, the illustration of header information and the like related to the communication protocol is omitted.

The outside world recognition information message 671 includes the number of objects 721 indicating the number of objects to be transmitted, ID 722 for the number of objects, type 723, position information 724, attribute information 725, and the like. The above-mentioned various information may be transmitted as one message as in the illustrated control event message format, or may be divided into an arbitrary plurality of messages and transmitted.

ID722 is an identifier for uniquely identifying the recognized object.

Type 723 is an identifier for specifying the type of the object, and is, for example, "vehicle", "pedestrian", "signal", or the like.

The position information 724 includes data indicating the position information of the object. The position information may be latitude / longitude information, a relative position from the vehicle 2 (for example, a relative distance to an object and a relative direction), or a position on a road map (for example, a link or a node). ID and its relative position to the reference point). Further, information such as speed and moving direction may be included in the position information 763.

The attribute information 725 is a data group representing a state peculiar to each object. For example, when the object is a "signal", the current state of the signal (red, blue, etc.) and the subsequent switching timing (blue, etc. after 5 seconds) are included.

The external world recognition information message 671 output by the vehicle-mounted control device 10 in step 682 is transmitted to the vehicle-mounted display device 20 through, for example, the vehicle-mounted network. The outside world recognition information acquisition unit 206 of the vehicle-mounted display device 20 receives the transmitted outside world recognition information message 671, analyzes the message according to the outside world recognition information message format 720, and acquires various information (step 691). Next, the outside world recognition information acquisition unit 206 updates the outside world recognition information data group 223 based on the acquired related outside world recognition information (step 692).

With the above, the output processing of the first outside world recognition information is completed. Then, the process moves to the output processing of the control event information.

First, in step 651, the driving control information output unit 110 of the in-vehicle control device 10 generates a control event in the driving action content determination process (step 454) and the driving control content determination process (step 455) of the driving control processing flow 450. Check if. The control event corresponds to a change in the driving behavior mode or a change in the driving control state. If no control event has occurred (No in step 651), the process ends without any processing. If a control event has occurred (Yes in step 651), the process proceeds to the discomfort determination process (step 653).

An example of the discomfort determination processing flow 700 will be described with reference to FIG. The control discomfort determination unit 109 of the in-vehicle control device 10 first acquires the generated control event information (step 701). Specifically, the control event information includes the state transition content of the driving behavior mode or the driving control state, the factor of the control event extracted when the control event occurs, and the like.

Next, with reference to the driving behavior type 401, the traveling control type 402, and the factor 403 of the control discomfort pattern data group 124, it is confirmed whether or not there is a corresponding entry related to the control event (step 702). If there is a corresponding entry (Yes in step 702), the value of the corresponding discomfort level 405 is set as the discomfort level of the control event (step 703). On the other hand, if there is no corresponding entry, 0 (no discomfort) is set as the discomfort level. This completes the discomfort determination process.

Return to the travel control information output processing flow 650 of FIG. Next, the travel control information output unit 110 confirms whether or not the discomfort level specified in the discomfort determination process (step 652) is equal to or higher than a predetermined threshold value (step 653). If the discomfort level is below a predetermined threshold (No in step 653), the process ends without doing anything. If the discomfort level is equal to or higher than a predetermined threshold value (Yes in

IPR2025-01035
Tesla EX1002 Page 2363

step 653), a control event message 670 is generated based on the control event information, and the generated message is output from the communication unit 130 to the in-vehicle network or the like (step 654).).

By determining whether or not the control event information needs to be output according to the level of discomfort, it is possible to suppress the transmission of unnecessary information. In the present embodiment, as will be described later, the content of the control event and its factors are presented via the in-vehicle display device 20 based on the output control event information. However, if unnecessary information is also presented, the operation is performed. People and occupants feel annoyed. Therefore, by outputting only the control events that are likely to give a sense of discomfort, it is possible to reduce the annoyance that the driver or the occupant feels when presenting information on the in-vehicle display device 20. As the threshold value of the discomfort level in step 653, a fixed threshold value such as "the discomfort level is 2 or more" may be set, or the threshold value may be dynamically changed according to the situation. Alternatively, the threshold value may be changed so that the driver or the like can adjust whether or not to output through the HMI device.

FIG. 11 is an explanatory diagram of an example of the format 750 of the control event message 670 transmitted by the vehicle-mounted control device 10 of the present embodiment. However, the illustration of header information and the like related to the communication protocol is omitted.

The control event message 670 includes a control event type 751, a driving behavior type 752, a driving control type 753, a control event factor 754, a control event object ID 755, a discomfort level 756, and the like. The above-mentioned various information may be transmitted as one message as in the illustrated control event message format, or may be divided into an arbitrary plurality of messages and transmitted.

The control event type 751 is for identifying whether it is a control event due to a change in the driving behavior mode or a control event due to a change in the driving control state. For example, "driving behavior change" and "driving control" are used, respectively. Expressed as "change."

The driving action type 752 is a type of the driving action mode after the control event occurs. When the control event type 751 is "driving behavior change", the driving behavior type 752 represents the driving behavior mode in which the control event is generated. On the other hand, when the control event type 751 is "driving control change", it simply represents the current driving behavior mode.

The travel control type 753 is a type of travel control state after the occurrence of the control event. When the control event type 751 is "travel control change", the travel control type 753 represents the travel control state in which the control event is generated. On the other hand, when the control event type 751 is "driving behavior change", it simply represents the current driving control state.

The control event factor 754 includes information on the factor that caused the control event. The value corresponding to the factor 403 in the control discomfort pattern data group 124 of FIG. 3 is entered.

The control event factor object ID 755 is an identifier of the object corresponding to the factor that caused the control event. The control event factor object ID 755 corresponds to the ID 722 included in the outside world recognition information message 671, and it is assumed that detailed information (type, position information, attribute information, etc.) of the object can be referred to from this ID 755. There is. In the example of FIG. 11, only the ID of the factor object is included, but detailed information related to the factor object may be included. The control event factor object ID 755 may include IDs of a plurality of objects. In that case, for example, information on the number of object IDs included immediately before the control event factor object ID 755 is stored (hidden), and the corresponding object IDs are continuously arranged.

The discomfort level 756 represents the discomfort level for the control event specified in the discomfort determination processing flow 700.

Return to the travel control information output processing flow 650 of FIG. When the travel control information output unit 110 of the vehicle-mounted control device 10 completes the process of step 654, the travel control information output process is completed regardless of the process on the vehicle-mounted display device 20 side, and the travel control information output process of FIG. 5 is completed. Return to 450.

In the travel control processing flow 450 of FIG. 5, when the travel control information output process (step 457) is completed, the process returns to step 451 and the same process is repeated. Recognizes the situation of the own vehicle and the outside world (steps 452 and 453), determines the content of driving behavior and driving control based on the recognition result (step 456), and actuators the target control value based on the determined driving control content. By repeating a series of processes of outputting to the group 70 and notifying the vehicle-mounted display device 20 of the travel control information as needed in a short cycle (for example, 50 ms), the vehicle 2 by the travel control system 1 Driving control is realized.

IPR2025-01035
Tesla EX1002 Page 2364

Return to the travel control information output processing flow 650 of FIG. The control event message 670 output by the vehicle-mounted control device 10 in step 654 is transmitted to the vehicle-mounted display device 20 through, for example, the vehicle-mounted network. The travel control information acquisition unit 204 of the vehicle-mounted display device 20 receives the transmitted control event message 670, analyzes the message according to the control event message format 750, and acquires various information (step 661). Next, the HMI output control unit 205 of the vehicle-mounted display device 20 performs an HMI output content determination process to determine the content to be output to the screen input / output unit 240 and the audio input / output unit 250 (step 662).

An example of the processing flow 800 of the HMI output content determination process will be described with reference to FIG. First, the HMI output control unit 205 of the vehicle-mounted display device 20 confirms whether the discomfort level of the received control event is equal to or higher than the threshold value for determining whether or not the audio should be output (step 801). If it is less than the threshold value (No in step 801), the process proceeds to step 805, and then it is confirmed whether the discomfort level is equal to or higher than the threshold value for determining whether or not the screen should be output. Then, if it is less than the screen output threshold value (No in step 805), the process proceeds to step 809, the output format is set to "None", and the process ends. If it is equal to or higher than the screen output threshold value, the process proceeds to step 808, the output format is set to "display only", and the process ends.

Returning to step 801 and when the discomfort level is equal to or higher than the voice output threshold value, the process proceeds to step 802, the control event notification pattern data group 222 is referred to, and the voice notification setting 404 related to the control event is "non-notification". Check if. In the case of "non-notification" (Yes in step 802), it means that the user is set not to perform voice notification, so set the output format to "display only" (step 808) and end the process. .. If it is other than "non-notification" (No in step 802), similarly check whether the voice notification setting 404 is "notification", and if applicable (Yes in step 803), change the output format to "Voice +". Set to "Display" (step 804) and end the process. If not applicable (No in step 803), the control event notification pattern data group 222 is referred to to check whether the number of notifications 405 related to the control event exceeds a predetermined threshold value N (step 806). If it exceeds, the output format is set to "display only" (step 808), and the process ends. On the other hand, if the number of notifications 405 does not exceed the threshold value, 1 is added to the number of notifications 405 (step 807), the output format is set to "voice + display" (step 804), and the process ends.

In the present embodiment, the audio output and screen output of the control event information are determined according to the discomfort level, and the audio output is not performed unless the discomfort level is high (3, which is the highest level in this example). It has become. This is because the voice output is an explicit notification to the user, which may cause a strong annoyance depending on the need for the user. Therefore, the control event information having a low discomfort level is displayed only on the screen without using voice, or nothing is output, thereby reducing the annoyance given to the user. The discomfort level 405 of the control discomfort pattern data group 124 may be changed through the screen input / output unit 240 of the vehicle-mounted display device 20. With such a configuration, it is possible to perform a customization operation such as lowering the corresponding discomfort level 405 for a pattern that does not feel discomfort so much according to the occupant's familiarity and difference in sensation.

Further, in step 806, the necessity of voice output is determined according to the number of notifications of the control event. This is to reduce the annoyance felt by the user by repeating the same notification. The user learns to receive the same notification many times, but nevertheless, if the voice notification is given every time, the user becomes annoyed. Therefore, by suppressing the voice notification when the number of notifications exceeds a predetermined number of times, the annoyance felt by the user is reduced. In the present embodiment, a method of suppressing excessive voice notification by using an index of the number of notifications is described, but an index of notification frequency may be used in consideration of the time axis (for example, notification frequency). If the value exceeds a predetermined threshold, voice notification will not be given, etc.). Further, as shown by "notification" and "non-notification" of the audio notification setting 404 of the control event notification pattern data group 222, the in-vehicle display device 20 in the present embodiment includes the screen input / output unit 240 and the audio input / output unit 250. It also has a function of letting the user set it through the system. The user may be explicitly set by the setting screen of the in-vehicle display device 20, or when the number of notifications of the control event exceeds a predetermined value in step 807, the screen input / output unit 240 or the audio input / output unit 240 or the audio input / output unit. The user may be asked to confirm and specify the necessity of audio output via the 250. Further, the user may be configured to suppress the voice notification itself.

Return to the travel control information output processing flow 650 of FIG. When the HMI output content determination process in step 662 is completed, the HMI output control process is executed according to the determined output format (step 663). For example, when the output format of "voice + display" is selected in step 662, the screen input / output unit 240 displays the control event information and the voice input / output unit 250 notifies the voice. When "display only" is selected as the output

IPR2025-01035
Tesla EX1002 Page 2365

format, the screen input / output unit 240 displays the control event information and does not output audio. If the output format is "None", this process ends without doing anything. A specific method of presenting control event information will be described later using a specific example. When the HMI output processing is completed, the traveling control information output processing flow in the vehicle-mounted display device 20 ends.

The operation of the traveling control system 1 in a specific scene will be described. FIG. 13 shows a scene (signal intersection scene 900) in which the vehicle 901 is traveling straight on the road 931 (speed limit 40 km / h) toward the signalized intersection 930. Another vehicle 902 is traveling at 40 km / h in front of the vehicle 901 traveling at 40 km / h. The color of the signal 912 at the intersection 930 with respect to the traveling path of the vehicle 901 is "blue", and it is possible to pass through. On the other hand, the signal 912 is in a situation where it turns red after 5 seconds (913). It is assumed that the vehicle 901 is far from the intersection 930 and cannot pass the intersection 930 before the traffic light 912 turns red, whereas the vehicle 902 is sufficiently close to the intersection 930 and can pass. A roadside unit 911 for road-to-vehicle communication is installed near the signalized intersection 930, and the roadside unit 911 is connected to the signal 912 by a predetermined network. The roadside machine 911 acquires signal information regarding the color state and subsequent signal switching from the signal 912, and distributes the signal information to the vehicle 901 and the like by road-to-vehicle communication according to a predetermined message format.

In such a scene, when a person drives the vehicle 901, it is assumed that the vehicle heads for the intersection 930 without decelerating while the traffic light is blue, and in some cases accelerating. Then, when the signal 912 turns yellow, the brake is stepped on to suddenly decelerate. This is because the person cannot recognize how the signal 912 will switch in the future, and controls the running of the vehicle 2 based on the color state of the signal 912 at that time.

On the other hand, the travel control system 1 can acquire information on switching of the signal 912 from the roadside machine 911, and knows that the signal 912 turns red after 5 seconds, so that the signal 912 of the vehicle 901 is blue. By decelerating from the state, it is possible to prevent fuel waste due to sudden deceleration or unnecessary acceleration. However, for the driver or occupant of the vehicle 901, since the information that can be recognized is a green light, it is unnatural for the vehicle 901 to decelerate, which may cause a sense of discomfort. Therefore, in the present embodiment, the driver or the occupant is notified of the cause of the deceleration through the in-vehicle display device 20, thereby reducing the sense of discomfort.

A series of processing flows will be described with reference to the processing flow of FIG. In the signal intersection scene 900, first, the outside world recognition information acquired in step 453 includes the information of the other vehicle 902 and the signal 912. The information of the other vehicle 902 is the recognition result of the external sensor group 50 such as a stereo camera, the information acquired by the wireless communication unit 30 by the vehicle-to-vehicle communication, or the integrated result thereof. The information of the signal 912 is acquired by the wireless communication unit 30 from the roadside unit 911 by road-to-vehicle communication.

Next, the driving behavior content is determined in step 454. In the signalized intersection scene 900, since the vehicle 900 is assumed to go straight through the intersection 930, the driving action mode corresponds to the normal driving mode 301, and according to the processing flow of FIG. 6, the conditions of steps 551 to 557 are not met, so that it is normal. There is no particular change in the driving mode (step 580).

Subsequently, the process proceeds to the traveling control content determination process (step 455). Since it corresponds to the travel control content determination process of the normal travel mode 301, it passes through the process flow of FIG. 7. When calculating the target vehicle speed in step 603, the speed limit (40 km / h) of the traveling road, the preceding vehicle 902, and the signal 912 are considered. When the optimum vehicle speed is calculated for each, the upper limit is 40 km / h for the speed limit, and 40 km / h for the preceding vehicle 902, so it is around 40 km / h (changes according to the inter-vehicle distance). It becomes. On the other hand, since the signal 912 turns red after 5 seconds, it is derived that the intersection 930 cannot be passed due to the distance to the intersection. Therefore, the traveling control determination unit 106 of the in-vehicle control device 10 executes control so as to stop at the intersection 930, and the optimum vehicle speed is a value much smaller than 40 km / h (for example, 20 km / h). h). When calculating the target vehicle speed by integrating these calculation results, the lowest value is the final value, so the target vehicle speed = 20 km / h. The result is "running" (step 606). Assuming that the vehicle has not been decelerated until then in step 609, the process proceeds to step 610, and a "signal" is derived as a change factor of the travel control state and a signal 912 (ID = 912) is derived as an object.

Returning to FIG. 5, after outputting the target control value to the actuator group 70 in step 456, the process proceeds to the travel control information output processing flow 650 of FIG. In step 651, since the travel control state has changed to "deceleration travel", the result is Yes, and the discomfort determination process (step 652) is executed. In the discomfort determination processing flow 700 of FIG. 10, when the control discomfort pattern data group 124 of FIG. 3 is referred to in step 702, the entry on the ninth line corresponds, so the discomfort level is set to 3. Next, assuming that the threshold value = 2 in

IPR2025-01035
Tesla EX1002 Page 2366

step 653, the discomfort level of the control event (= 3) ≥ the threshold value (= 2), the process proceeds to step 654, and the control event message 670 is output.

The data included in the output control event message 670 will be described. "Traveling control change" for control event type 751, "normal driving" for driving behavior type 752, "deceleration driving" for driving control type 753, "signal" for control event factor 754, and "signal" for discomfort level 756. 3 "is set. Regarding the control event factor object information 755, ID 761 stores "912", type 762 stores "signal", and position information 763 stores information representing an intersection 930 related to signal 912 (for example, node ID). Further, the attribute information 764 stores detailed information of the signal 912. The attribute information 764 of the signal 912 is, for example, the type of the signal 912 (vehicle signal in this scene), state (blue in this scene), switching timing (yellow after 3 seconds in this scene, red after 5 seconds, etc.). Etc. are included.

Returning to FIG. 8, the vehicle-mounted display device 20 acquires the control event message 670 output by the vehicle-mounted control device 10 in step 661, and executes the HMI output content determination process 662 of FIG. In the processing flow 800 of FIG. 12, since the discomfort level of the control event is 3, the process first proceeds from step 801 to step 802. When the control event notification pattern data group 222 of FIG. 4 is referred to in step 802, since the corresponding control event exists in the sixth line and the voice notification setting 404 is "notification", the process proceeds to step 804 via step 803. Therefore, the output format is determined to be "audio + display". Then, based on these determination contents, in the HMI output control process 663, the control event information is output to the screen input / output unit 240 and the audio input / output unit 250.

FIG. 14 shows an example of the screen display of the vehicle-mounted display device 20 in the signalized intersection scene 900. In the present embodiment, the screen input / output unit 240 includes a driving behavior mode display unit 1001, a control event notification display unit 1002, a navigation information display unit 1003, a traveling track information display unit 1004, and the like.

The driving behavior mode display unit 1001 is a display unit indicating the current driving behavior mode. Since the driving behavior mode of the signalized intersection scene 900 is the normal driving mode, it is described as "normal driving mode". The display method is not limited as long as it is expressed so that the content of the driving behavior can be understood. For example, the display method may be represented by an icon that schematically represents the driving behavior mode.

The control event notification display unit 1002 is a display unit that notifies the contents of the control event and its factors. For example, the text is in the format of "<control event content> because of <control event factor>". In the control event at the signalized intersection scene 900, it is described that "the vehicle decelerates because the signal cannot pass ahead" because the deceleration running control is caused by the signal. In this example, the part corresponding to <control event factor> is replaced with the word "forward signal cannot pass" instead of simply "signal". This is intended to convey the information more easily to the user. Specifically, the in-vehicle display device 20 holds the word pattern corresponding to the control event factor, and the control event notification display unit 1002 displays the pattern. It can be dealt with by converting when doing so. Further, the expression method of the control event notification display unit 1002 is not particularly limited as long as the content of the control event and its factor are expressed, and may be expressed by an icon representing the content of the control event and its factor. Since this display unit is supposed to be presented to the user when a control event occurs, the display may be turned off after a certain period of time has passed after the display, and then the driving control state changes. The display may be continued until, or the driver may be able to turn it off by operating the panel or the like. ..

The navigation information display unit 1003 is a display unit that displays a road map around the own vehicle 901 and indicates the position (1011) and the traveling route (1016) of the vehicle 2 on the map, and is displayed on a display screen of a general navigation system. It is equivalent. In the present embodiment, the traveling route on the road map is displayed, and at the same time, when a control event occurs, the object that caused the control event is highlighted at the corresponding position on the map. Since the control event factor in the signal intersection scene 900 is the signal 912 of the intersection 930 in FIG. 13, the state (blue) of the signal 912 is highlighted at the position of the corresponding intersection 1014 on the map of the navigation information display unit 1003. (1012 in FIG. 14). By highlighting the object of the factor at the corresponding position on the map, the user can easily recognize the position of the signal in the real world from the relative relationship with the own vehicle position 1011. .. Further, by displaying the green light, which is the state at that time, instead of the red light that causes the deceleration running, the user can easily recognize the factor object in the real world. On the other hand, the factor of the deceleration running is that the vehicle switches to a red light before passing through the intersection 1014 (intersection 930 in FIG. 13). In order to make the user recognize it, the switching timing to the red signal is presented in the form of 1015 as the attribute information of the signal 1012. By indicating the switching timing of the red light, the user can immediately recognize that the intersection 1014 cannot be passed because of the distance to the intersection 1014. In this way, the position of the object of the factor is highlighted on the map in a form that the user can recognize in the field of view, and the attribute

IPR2025-01035
Tesla EX1002 Page 2367

information suggesting the factor of the control event is individually presented as necessary. Can easily recognize objects in the real world, and at the same time, can easily grasp the factors of control events.

The traveling track information display unit 1004 is a display unit that shows the outside world recognition information in the vicinity of the own vehicle and also shows the latest traveling track of the own vehicle. The vehicle 1021 represents the own vehicle 901, and the vehicle 1022 represents another vehicle 902 recognized by the external sensor group 50, the wireless communication unit 30, and the like. The arrow 1023 represents the traveling track of the vehicle 1021. In the signalized intersection scene 900, since the own vehicle 901 travels straight, the traveling track is shaped along the lane.

By the above series of processing, in the signal intersection scene 900, the travel control system 1 notifies the user that the vehicle decelerates due to the inability to pass the signal at the intersection in front when the deceleration control is performed. , The deceleration control makes it possible to reduce the discomfort that the user receives.

Subsequently, the operation of the traveling control system 1 in another specific scene will be described. FIG. 15 shows a scene (lane change scene 1110) in which the vehicle 1101 is trying to change lanes in order to avoid the low-speed vehicle 1102 (30 km / h) ahead on the straight road 1110 (speed limit 60 km / h). Another vehicle 1103 and another vehicle 1104 are running in the overtaking lane, and at this point, overtaking cannot be applied.

In such a scene, when a person drives the vehicle 1101, it waits until it becomes possible to change lanes to the overtaking lane while having the intention of overtaking the low-speed vehicle in front, and it becomes possible for other vehicles 1103 and the like to pass through. The flow is to change lanes when it is determined that the vehicle has become.

On the other hand, in the case of an automatic driving system, people cannot see what kind of intention they are driving. Therefore, while people are aware of overtaking when they detect the presence of a low-speed vehicle in front of them, in the autonomous driving system, the system intended to overtake until the control of lane change was actually executed. You will not be able to recognize that. In other words, since it is not possible to recognize whether or not the automatic driving system behaves as expected, the driver or the occupant may feel uncomfortable. Therefore, in the present embodiment, the driver or the occupant is notified of the intention to change lanes of the driving control system 1 through the in-vehicle display device 20, thereby reducing the sense of discomfort.

A series of processing flows will be described with reference to the processing flow of FIG. In the lane change scene 1100, first, the outside world recognition information acquired in step 453 includes information on other vehicles 1102 to 1104. The information of the other vehicles 1102 to 1104 is the recognition result of the external sensor group 50 such as a stereo camera, the information acquired by the wireless communication unit 30 by the vehicle-to-vehicle communication, or the integrated result thereof.

Next, the driving behavior content is determined in step 454. It is assumed that the driving behavior mode at this point is the normal driving mode in which the vehicle travels on the same lane. According to the processing flow of FIG. 6, in order to meet the condition of step 557, the process proceeds to step 567, the driving behavior mode is changed to "lane change", and the driving behavior determinant is set to "forward low-speed vehicle". Further, in the next step 571, the information of the other vehicle 1102 is extracted as the object information.

Subsequently, the process proceeds to the traveling control content determination process (step 455). Since the driving action mode is determined to be "lane change" in step 454, the driving control content determination process of the lane change mode is performed. As the travel control type of the lane change mode 304, lane keeping travel control 340 and lane change travel control 341 are defined as shown in FIG. Although it is not described as a processing flow, it follows the lane keeping driving control 340 that keeps driving in the current lane until the safety against entering the changed lane is confirmed, and when the safety is confirmed, the driving control state To the lane change driving control, and then to the actual lane change control. In the lane change scene 1100, since it is dangerous to enter the overtaking lane due to the presence of the other vehicle 1103, the target trajectory is calculated according to the lane keeping driving control 340, and the control target values of the steering angle and the vehicle speed are calculated. The change in the driving control state in the lane change mode is due to the judgment of whether or not to enter the changed lane, and if the driver or the occupant recognizes the intention to change the lane by the driving control system 1, the driver or the occupant can see it. It is obvious. Therefore, since it does not give a sense of discomfort, it is not necessary to specify the driving control state change factor or the object thereof as in the normal driving mode. The same can be said for the right turn mode 302, the left turn mode 303, the parking mode 305, and the like.

Returning to FIG. 5, after outputting the target control value to the actuator group 70 in step 456, the process proceeds to the travel control information output processing flow 650 of FIG. In step 651, since the driving behavior mode has changed from the "normal driving mode" to the "lane change mode", the result is Yes, and the discomfort determination process (step 652) is executed. In the discomfort determination processing flow 700 of FIG. 10, when the control discomfort pattern data group 124 of

IPR2025-01035
Tesla EX1002 Page 2368

FIG. 3 is referred to in step 702, the entry on the sixth line corresponds, so the discomfort level is set to 3. Next, assuming that the threshold value = 2 in step 653, the discomfort level of the control event (= 3) ≥ the threshold value (= 2), the process proceeds to step 654, and the control event message 670 is output.

The data included in the output control event message 670 will be described. "Driving behavior change" for control event type 751, "lane change" for driving behavior type 752, "lane keeping driving" for driving control type 753, "low speed vehicle" for control event factor 754, discomfort level 756 is set to "3". Regarding the control event factor object information 755, the ID 761 stores "1102", the type 762 stores "other vehicle", the position information 763 stores the position information (for example, latitude, longitude, etc.) of the other vehicle 1102, and further. , Attribute information 764 stores detailed information of the other vehicle 1102. The attribute information 764 of the other vehicle 1102 includes, for example, information such as the traveling speed of the other vehicle 1102.

Returning to FIG. 8, the vehicle-mounted display device 20 acquires the control event message 670 output by the vehicle-mounted control device 10 in step 661, and executes the HMI output content determination process 662 of FIG. As with the signalized intersection scene 900, the discomfort level is 3, so the output format is determined to be "voice + display". Then, based on these determination contents, in the HMI output control process 663, the control event information is output to the screen input / output unit 240 and the audio input / output unit 250.

FIG. 16 shows an example of the screen display of the vehicle-mounted display device 20 in the lane change scene 1100.

The configuration of the screen input / output unit 240 is the same as that of the signalized intersection scene 900, and includes a driving action mode display unit 1151, a control event notification display unit 1152, a navigation information display unit 1153, a traveling track information display unit 1154, and the like. ..

Since the driving action mode in the control event of the lane change scene 1100 is the lane change mode, the driving action mode display unit 1151 describes the "lane change mode". In addition, since the <control event factor> is "low-speed vehicle" and the <control event content> is lane change, the control event notification display unit 1152 expresses that "lane change is under consideration to avoid low-speed vehicles ahead". ing. The reason why "Considering lane change" is used instead of "Change lane" is that the lane change control has not yet been achieved because the driving control state is "lane keeping driving". Since the control event is due to a change in the driving behavior content, the purpose is not to notify the driving control content but to notify the intention of the driving control system 1 as to what kind of driving the driving control system 1 intends to drive. If the driving control state of the lane change mode shifts to "lane change driving", the control event notification display unit 1152 will change the lane to avoid a low-speed vehicle ahead. Express the subject in the notification of the content. As in the display example of the control event notification display unit 1152 in FIG. 16, the mode of driving behavior has changed, but when the specific driving control to be executed is under consideration (calculation in progress). Various display modes such as flashing the display of the display unit can be adopted.

As in the case of the signalized intersection scene 900, the traveling track information display unit 1154 shows the latest traveling track of the own vehicle together with the outside world recognition information in the vicinity of the own vehicle. The vehicle 1171 represents the own vehicle 1101, and the vehicles 1172 to 1174 represent other vehicles 1102 to 1104 recognized by the external sensor group 50, the wireless communication unit 30, and the like.

First, the characteristic is that the vehicle 1172 corresponding to the low-speed vehicle 1102, which is the cause of the control event, is highlighted by being surrounded by a broken line 1182. In the signalized intersection scene 900, the control event factor was highlighted on the navigation information display side, but in order for the user to easily recognize the low-speed vehicle 1102 in the real world, it is necessary to display the positional relationship at the particle size at the lane level. Therefore, it is desirable to highlight the information on the traveling track information display unit 1154 side. It should be noted that the navigation information display unit 1153 and the traveling track information display unit 1154 may be highlighted on both sides. Further, the highlighting method shown in FIG. 16 is an example until it gets tired, and any highlighting method may be used. For example, the color of the vehicle may be changed, the vehicle may be blinked, or the vehicle may be enlarged. good.

Another feature is that the traveling track 1180 of the vehicle 1171 is shown and the traveling track 1181 of the lane change under consideration is displayed as a dotted line. This has the meaning of visually communicating that the travel control system 1 has an intention to change lanes and at the same time indicating the intended lane change destination in a situation where the lanes can be changed on both sides. The dotted line display is because at this point the lane change is still under consideration and the actual driving control has not been reached. If the travel control state of the lane change mode shifts to "lane change travel", the current travel track 1180 disappears and the lane change travel track 1181 is displayed as a solid line.

By the above series of processing, in the lane change scene 1100, the driving control system 1 causes the user (low-speed vehicle) at the time when the intention to change the lane is accompanied even before the actual control of the lane change is

IPR2025-01035
Tesla EX1002 Page 2369

started. By notifying the intention together with), it is possible to give a sense of security to the user who expects to avoid low-speed vehicles.

As described above, according to the present embodiment, the in-vehicle control device 10 of the vehicle 2 identifies the determinants and their objects when the driving behavior content changes, and outputs the information to the outside. Then, the vehicle-mounted display device 20 presents the driving behavior content of the traveling control system 1 to the user together with the factors based on the output information. As a result, the user can grasp what kind of driving the driving control system 1 intends to drive or what kind of driving the driving control system 1 intends to drive, and the user feels that the operation of the vehicle 2 due to the automatic driving cannot be predicted. It is possible to reduce the anxiety of.

Further, according to the present embodiment, the vehicle-mounted control device 10 of the vehicle 2 identifies the determinants and their objects when the travel control content changes, and outputs the information to the outside. Then, the vehicle-mounted display device 20 presents the travel control content of the travel control system 1 to the user together with the factors based on the output information. As a result, the user can grasp what kind of control the driving control system 1 intends to perform or is performing for what reason, and the user feels that the reason for the driving control cannot be recognized. It is possible to reduce the sense of incongruity.

Further, according to the present embodiment, the in-vehicle control device 10 of the vehicle 2 evaluates whether or not the user feels uncomfortable with respect to the combination of the changes in the driving behavior content and the driving control content and the factors thereof, and determines the degree thereof. It is determined whether to output to the outside according to it. As a result, it is possible to exclude information that is not worth notifying, and to reduce the annoyance felt by the user due to excessive notification. Similarly, the vehicle-mounted display device 20 of the vehicle 2 determines whether to notify only by the screen display or the voice as well, depending on the degree of discomfort. This also means that the level of arousing to the user is adjusted according to the importance of the information, and has the effect of reducing the annoyance felt by the user due to excessive notification.

2nd Embodiment In the 1st embodiment, in order to determine the level of discomfort felt by changes in driving behavior and driving control, a combination of control events and their factors that may cause discomfort by the in-vehicle control device 10. The control discomfort pattern data group 124 indicating the pattern is retained. In the second embodiment, an example of determining the control discomfort by different methods will be described.

FIG. 17 shows the discomfort determination processing flow 1200. This corresponds to the discomfort determination process of step 652 of FIG. 8 in the second embodiment.

After acquiring the control event information (step 1201), the in-vehicle control device 10 confirms whether or not the control event is due to a change in driving behavior (step 1202). If it is due to a change in driving behavior, the discomfort level is set to 3 (maximum value) (step 1206), and the process is terminated. This means that control events related to changes in driving behavior are always set to be output to the outside.

On the other hand, if it is not due to a change in driving behavior, that is, due to a change in driving control (No in step 1202), first, the information source of the factor target is specified from the control event information acquired in step 1201 (No). Step 1203). Here, the information source means by what means the factor object is recognized, and corresponds to, for example, a camera or radar included in the external sensor group 50, wireless communication by the wireless communication unit 30, and the like. do. In addition, even if there are multiple information sources for the factor object itself, the information sources for which the information used when determining the control event cannot be obtained shall be excluded. For example, in the signal intersection scene 900 of the first embodiment, the signal state can be recognized by the camera in addition to the wireless communication, but the information used for determining the control event is the information of the signal switching timing, which is the camera. Cannot be recognized from. In that case, only wireless communication is applicable as the information source.

A person recognizes the situation outside the vehicle by actually seeing it, and judges the driving behavior of the vehicle based on the recognition. On the other hand, the travel control system 1 can acquire information that cannot be recognized by a person. When the driving behavior content and the driving control content are determined based on the information that can be recognized by the person, the person is unlikely to feel uncomfortable about the content. On the other hand, the content of driving behavior and the content of driving control based on information that cannot be recognized by a person are likely to give a sense of discomfort. Therefore, it is determined whether the information is recognizable by the user according to the type of the information source of the factor object and other specific conditions, and the discomfort level is specified. Specifically, in step 1204, the discomfort level is specified by referring to the control discomfort pattern data group 1300 shown in FIG. 18 instead of the control discomfort pattern data group 124 of the first embodiment.

IPR2025-01035
Tesla EX1002 Page 2370

The control discomfort pattern data group 1300 is a set of data indicating the degree of discomfort given to the information source of the factor object or the specific condition. The information source type 1301 represents a means for recognizing a factor object. The peculiar condition 1302 represents an environmental condition that changes the discomfort level 1303 in the information source type 1301. The discomfort level 1303 represents the degree of discomfort that may be given when the corresponding information source type 1301 and the specific condition 1302 are combined. For example, since the visible light camera is almost the same as the means for recognizing the situation outside the vehicle of a person, the discomfort level is set to 0. For example, millimeter-wave radar has the characteristic of being able to detect obstacles in the distance. Since it becomes difficult for human eyesight to recognize the distance, the level of discomfort is set according to the distance of the object. Further, for example, an infrared camera has a feature of being able to detect an obstacle even at night. However, since human eyesight cannot recognize an object in the dark, the level of discomfort is set differently at night and at other times. Alternatively, the vehicle may have a means for recognizing the brightness outside the vehicle (for example, an illuminance sensor), and the discomfort level may be changed according to the level. Note that FIG. 18 is an example until it gets tired, and arbitrary conditions such as relative distance, brightness outside the vehicle, weather, and poor visibility may be set for any information source type. Further, the discomfort level may be adjusted separately according to the installation method of the external sensor in the vehicle. For example, the front camera and the rear camera may be different information source types.

Factors The object may be recognized by multiple sources. In that case, in step 1203, the control discomfort pattern data group 1300 is referred to for each information source, and the corresponding discomfort level is specified. For example, assuming that the vehicle in front 100 m ahead is the factor target, when the vehicle in front is detected by the visible light camera and the millimeter wave radar, the discomfort level of the visible light camera is 0 (first line) and the millimeter wave radar. The discomfort level of is specified as 2 (3rd line).

Then, in the next step 1205, the minimum value is selected for one or more specified discomfort levels, the discomfort level of the control event is set, and this process is terminated.

As described above, according to the present embodiment, the in-vehicle control device 10 of the vehicle 2 gives the user a sense of discomfort depending on the means by which the object that is the deciding factor of the traveling control content is recognized. It evaluates whether or not it is output, and decides whether to output it to the outside according to the degree. As a result, it is possible to notify only the control contents executed based on the information that cannot be recognized by a person, and it is possible to reduce the annoyance felt by the user due to excessive notification.

Third Embodiment In the first embodiment and the second embodiment, an example of a method of notifying the content and factors of a change in driving behavior or driving control has been described. On the other hand, the user may feel uncomfortable even when the driving behavior or the driving control is not changed. In the present embodiment, an example of means for detecting a situation that may give a sense of discomfort to the user and notifying the user regardless of whether or not there is a change in driving behavior or driving control will be described.

In the present embodiment, when calculating the target steering angle and the target vehicle speed in the traveling control content determination process (corresponding to steps 602 and 603 in FIG. 7), whether or not the user feels uncomfortable with the calculation results. Perform the process to confirm.

The target vehicle speed calculation process will be described as an example. As described in the first embodiment, the target vehicle speed is an obstacle (for example, another vehicle, a pedestrian, a falling object, etc.) or a road shape (for example, a curve, an intersection, a confluence, a branch, etc.) in a traveling route or a target track. It is calculated by evaluating appropriate vehicle speeds for traffic regulations (for example, traffic lights, speed limits, etc.) and integrating them. In the present embodiment, two types are calculated: the optimum target vehicle speed calculated by using all the outside world recognition information as in the first embodiment, and the target vehicle speed calculated by excluding the outside world recognition information that the user cannot recognize. do. Then, the calculated two types of target vehicle speeds are compared, and if there is a significant difference, it is determined that there is a high possibility that the user feels uncomfortable. This means that there is a difference in the calculation results of the two types of target vehicle speeds, which means that the control content of the driving control system 1 (corresponding to the former target vehicle speed) is when the user recognizes the situation outside the vehicle and drives (the latter). This is because it means that there is a difference from the target vehicle speed). The external recognition information that cannot be recognized by the user includes, for example, signal switching timing that can be obtained only by wireless communication, traffic conditions in blind spots (traffic jam at a curve destination, etc.), and the like. The identification of the external recognition information that cannot be recognized by the user may be determined by holding a list of applicable information types (signal switching timing, etc.) in advance and collating the information, or introduced in the second embodiment. It may be judged by the information source type and the peculiar condition like the control discomfort pattern data group 1300.

IPR2025-01035
Tesla EX1002 Page 2371

If it is determined that the driving control content is likely to give the user a sense of discomfort as described above, even if there is no change in the driving control state, the control event information is output to the in-vehicle display device 20. .. Upon receiving the information, the in-vehicle display device 20 notifies the user by screen display or voice output as necessary according to the same method as in the first embodiment.

Hereinafter, a specific scene will be described. FIG. 19 is a scene (signal intersection scene 1400) in which the color switching of the signal 912 is changed from blue --> red to red --> blue in the signal intersection scene 900. That is, the color of the signal 1412 is "red" at this point, and it is impossible to pass through. On the other hand, the signal 1412 is switched to blue after 5 seconds, and the information is notified to the own vehicle 901 by road-to-vehicle communication through the roadside machine 911. Further, since the signal 1412 is in the red state, the speed of the other vehicle 902 is set to 10 km / h and the speed of the own vehicle 901 is set to 30 km / h accordingly.

In this signalized intersection scene 1400, when calculating the target vehicle speed, the speed limit (40 km / h) of the traveling road, the preceding vehicle 902, and the signal 1412 are taken into consideration. When the optimum vehicle speed is calculated for each, the upper limit is 40 km / h with respect to the speed limit. The preceding vehicle 902 is traveling at 10 km / h, but it is assumed that the distance between the vehicles is sufficient, and it is calculated to be around 30 km / h. The signal 1412 is red at this point, but turns blue after 5 seconds, so it is derived that it can pass as it is if it heads for the intersection 930 at the current speed, and the optimum vehicle speed is 30 km / h. When the target vehicle speed is calculated by integrating these calculation results, the lowest value is the final value, so the target vehicle speed = 30 km / h. This is the optimum target vehicle speed. On the other hand, when considering excluding the outside world recognition information that cannot be recognized by the user, the information regarding the signal switching timing cannot be used, so that the signal 1412 is only the color information of the signal recognized by, for example, a camera or the like. In that case, since the signal 1412 is a red light, it is determined that the vehicle should stop before the intersection 930, and the optimum vehicle speed is a value much smaller than 30 km / h (for example, 15 km / h). Here, when the calculation results of the two target vehicle speeds are compared, it can be seen that there is a large difference. That is, it means that the control content of the travel control system 1 is different from the case where the user recognizes the situation outside the vehicle and drives, and there is a high possibility that the user feels uncomfortable. The degree of discomfort given is set according to, for example, the degree of difference between the two target vehicle speeds. In this example, it is assumed that the discomfort level is set to "3".

Therefore, the vehicle-mounted control device 10 outputs the information related to the vehicle to the vehicle-mounted display device 20. Specifically, for example, according to the control event message format 750, the control event type 751 is "driving control change" (however, since there is no actual change, another type may be defined), and the driving behavior type 752 is "Normal driving mode", "steady driving" for the driving control type 753, "signal" for the control event factor 754, and "3" for the discomfort level 756 are set. Regarding the control event factor object information 755, ID 761 stores "1412", type 762 stores "signal", and position information 763 stores information representing an intersection 930 related to signal 1412 (for example, node ID). Further, the attribute information 764 stores detailed information of the signal 1412. The attribute information 764 of the signal 1412 includes, for example, information such as the type of the signal 912 (vehicle signal in this scene), the state (red in this scene), and the switching timing (blue after 5 seconds in this scene, etc.). It has been.

FIG. 20 shows an example of the screen display of the vehicle-mounted display device 20 in the signalized intersection scene 1400. The screen configuration and display contents are almost the same as those in FIG. 14 of the screen display example of the signalized intersection scene 900. The content has changed significantly in the control event notification display unit 1502, and since <control event factor> corresponds to "signal" and <control event content> corresponds to "steady running", "because the signal can pass ahead". I usually drive. "

As described above, according to the present embodiment, when the vehicle-mounted control device 10 of the vehicle 2 calculates the target steering angle and the target vehicle speed, the calculation result using all the external world recognition information and the user can recognize it. By comparing the calculation results using only the inferred information, it is determined whether the user feels uncomfortable with the control content. Since this discomfort determination is performed in each processing loop for determining the control content, it has an effect of being able to detect a control state that may give the user a discomfort regardless of the change in the control content. In addition, since the judgment is made based on the actual outside world recognition information, it is possible to deal with the influence of environmental changes such as the visibility being obstructed by obstacles and the weather.

The embodiment described above is an example, and the present invention is not limited to this. That is, various applications are possible, and all embodiments are included in the scope of the present invention.

For example, in the above embodiment, each process of the in-vehicle control device and the in-vehicle display device is realized by executing a predetermined operation program using a processor and RAM, but if necessary, the original hardware is

IPR2025-01035
Tesla EX1002 Page 2372

used. It is also possible to realize it with hardware. Further, in the above embodiment, the in-vehicle control device, the in-vehicle display device, the wireless communication unit, the own vehicle positioning device, the external world sensor group, the vehicle sensor group, and the actuator group are described as individual devices, but it is necessary. It is also possible to realize by combining any two or more of them depending on the situation.

When each of the above processes is realized by the processor executing a predetermined operation program, the information of the operation program, table, file, etc. that realizes each process is the non-volatile semiconductor memory, hard disk drive, SSD (Solid State). It can be stored in a storage device such as Drive) or a computer-readable non-temporary data storage medium such as an IC card, SD card, or DVD.

In addition, the drawings show control lines and information lines that are considered necessary to explain the embodiment, and do not necessarily show all control lines and information lines included in the actual product to which the present invention is applied. Not always. In practice, it can be considered that almost all configurations are interconnected.

1: Travel control system 2: Vehicle 10: Vehicle-mounted control device 20: Vehicle-mounted display device 30: Wireless communication unit 40: Own vehicle positioning device 50: External sensor group 60: Vehicle sensor group 70: Actuator group 100: Vehicle-mounted CPU 101 of the control device 10: Related information acquisition unit 102: External recognition information integration unit 103: Map position estimation unit 104: Driving behavior determination unit 105: Driving behavior factor identification unit 106: Driving control determination unit 107: Driving control factor identification unit 108 : Factor object information extraction unit 109: Control discomfort determination unit 110: Travel control information output unit 111: External world recognition information output unit 120: Storage unit of in-vehicle control device 10 121: Peripheral road map data group 122: Own vehicle information data Group 123: External recognition information data group 124: Control discomfort pattern data group 130: Communication unit 200 of the in-vehicle control device 10: CPU 201 of the in-vehicle display device 20: Travel route determination unit 202: Peripheral map information transmission unit 203: Travel route information transmission unit 204: Travel control information acquisition unit 205: Travel control information output unit 206: External world recognition information acquisition unit 220: Storage unit of vehicle-mounted display device 221: Road map data group 222: Control event notification pattern data group 223: External recognition information data group 230: Communication unit 240 of the in-vehicle display device 20: Screen input / output unit 250 of the in-vehicle display device 20: Audio input / output unit of the in-vehicle display device 20

IPR2025-01035
Tesla EX1002 Page 2373

Europäisches Patentamt
European Patent Office
Office européen des brevets

Patent Translate
Powered by EPO and Google

Notice

This translation is machine-generated. It cannot be guaranteed that it is intelligible, accurate, complete, reliable or fit for specific purposes. Critical decisions, such as commercially relevant or financial decisions, should not be based on machine-translation output.

CLAIMS WO2015156146A1

1.

A travel control device mounted on a vehicle to control the travel of the vehicle, by receiving from an external sensor that captures obstacles in the course and objects outside the vehicle including other vehicles, or from the roadside. Includes the outside world recognition information acquisition unit for acquiring the outside world recognition information by receiving the information of the outside world, the outside world recognition information received from the outside world recognition information acquisition unit, the position of the own vehicle, and the traveling speed. Based on the information of the own vehicle, which is the driving action determination unit for determining the driving action content to be taken by the own vehicle, and the reason for determining the driving action content received from the driving action determination unit. A driving control device including a driving behavior factor specifying unit for specifying a driving behavior factor, and a driving behavior information output unit for outputting the driving behavior content and the driving behavior factor specified for the driving behavior content. ..

2.

The factor object according to claim 1, which is an object that has become the driving behavior factor, which is included in the outside world recognition information from the outside world recognition information associated with the driving behavior factor. The driving behavior information output unit is a traveling control device that includes a driving behavior factor object information extraction unit that extracts information about the factor object.

3.

The driving control device according to claim 1 or 2, wherein the driving control content determining unit for determining the driving control content of the vehicle based on the driving behavior determined by the driving behavior determining unit, and the driving control content. A driving control device including a driving control factor specifying unit for specifying a driving control factor that is the reason for determining the driving control factor, and a driving control information output unit for outputting the driving control content and the specified driving control factor.

4.

The factor object according to claim 3, which is an object that has become the travel control factor and is included in the outside world recognition information from the outside world recognition information associated with the travel control factor. The travel control information output unit is a travel control device that includes a travel control factor object information extraction unit that extracts information about the travel control factor object, and further includes information about the travel control factor object.

5.

IPR2025-01035
Tesla EX1002 Page 2374

The driving control device according to claim 3 or 4, wherein the driving control is the occupant of the vehicle with respect to the combination of the driving control content and the driving control factor, or the combination of the driving behavior and the driving control factor. A driving control device including a traveling control discomfort determination unit for determining whether or not a discomfort is given to the vehicle.

6.

The travel control device according to claim 5, further comprising control discomfort pattern information that records combination information of travel control contents and travel control factors that may give a discomfort to the occupants of the vehicle. The control discomfort determination unit is a travel control device that determines whether or not the travel control gives a discomfort to the occupants of the vehicle by referring to the control discomfort pattern information.

7.

The travel control device according to claim 5, wherein when the travel control discomfort determination unit detects a change in the travel control content, the outside world is associated with a travel control factor that is a change factor in the travel control content. A driving control device that determines a feeling of strangeness in driving control according to the type of acquisition source of recognition information.

8.

The external world according to claim 5, wherein the traveling control discomfort determination unit may give a discomfort to the occupant when the change in the traveling control content is not detected. A driving control device that determines a feeling of strangeness in driving control according to changes in recognition information.

9.

The travel control device according to claim 5, wherein the combination of the travel control content and the travel control factor is associated with a discomfort index using a discomfort that can be given to the occupant as an index, and is used as the discomfort index. An output determination threshold value, which is a reference value for whether or not to output information based on the discomfort, is set, and when the travel control discomfort determination unit determines that the discomfort index exceeds the threshold, the travel control information A travel control device that causes an output unit to output the travel control content and the specified travel control factor.

10.

An in-vehicle display device mounted on a vehicle and for presenting information to the occupants of the vehicle, which is information indicating the driving behavior of the vehicle that determines the driving control content of the vehicle, and is selected driving. A driving behavior information acquisition unit that acquires driving behavior information including information on the type of behavior and the factor that selected the driving behavior, a display unit for displaying the driving behavior information, and audio output of the content of the driving behavior information. An in-vehicle display device including at least one of a driving behavior information output unit, and a driving behavior information output unit that presents the type of driving behavior included in the driving behavior information together with a driving behavior factor.

11.

The vehicle-mounted display device according to claim 10, wherein the driving behavior information includes driving behavior factor object information related to an object associated with the driving behavior factor, and the driving behavior information output unit is the said. An in-vehicle display device that also outputs information about an object associated with a driving behavior factor.

12.

The vehicle-mounted display device according to claim 10, wherein the driving control information is information indicating the driving control content determined based on the driving behavior related to the driving behavior information, and the driving

IPR2025-01035
Tesla EX1002 Page 2375

control which is a factor of the driving control information. The driving behavior information output unit is associated with the factor, and is an in-vehicle display device that also outputs information on the driving control factor.

13.

The vehicle-mounted display device according to claim 12, wherein the driving control factor is associated with information about an object that is a factor of the driving control, and the driving behavior information output unit is the driving control. An in-vehicle display device that also outputs information about an object related to a factor.

14.

The vehicle-mounted display device according to claim 10, wherein the driving behavior information output unit suppresses the output of the driving behavior information when it is determined that the number of times the driving behavior information is output exceeds a predetermined number. In-vehicle display device.

15.

A travel control system mounted on a vehicle to control the travel of the vehicle, which is received from an external sensor that captures obstacles on the course and objects outside the own vehicle including other vehicles, or on the path from the roadside. The outside world recognition information acquisition unit for acquiring the outside world recognition information including these by receiving the information including the information on the progress possibility and the progress speed limit by the outside vehicle communication, and the outside world recognition information received from the outside world recognition information acquisition unit. And, based on the own vehicle information including the position and running speed of the own vehicle, the driving action determination unit for determining the driving action content to be taken by the own vehicle, and the driving action determination unit received from the driving action determination unit. The driving behavior factor identification unit for identifying the driving behavior factor that is the reason for determining the driving behavior content, and the information indicating the driving behavior of the vehicle that determines the driving control content of the vehicle, and is selected. A driving behavior information acquisition unit that acquires the driving behavior information including information on the type of driving behavior and the factor that selected the driving behavior, a display unit for displaying the driving behavior information, and the driving behavior information. A driving control system including at least one of an audio output unit that outputs the contents of the above, and a driving behavior information output unit that presents the type of driving behavior included in the driving behavior information together with the driving behavior factor. ..

IPR2025-01035
Tesla EX1002 Page 2376

(12) 特許協力条約に基づいて公開された国際出願

(19) 世界知的所有権機関
国際事務局

(43) 国際公開日
2015 年 10 月 15 日(15.10.2015)

WIPO | PCT

(10) 国際公開番号
WO 2015/156146 A1

(51) 国際特許分類:
B60W 50/14 (2012.01) *B60W 40/04* (2006.01)
B60R 16/02 (2006.01) *B60W 40/06* (2012.01)
B60W 30/00 (2006.01) *G08G 1/16* (2006.01)

(21) 国際出願番号: PCT/JP2015/059567

(22) 国際出願日: 2015 年 3 月 27 日(27.03.2015)

(25) 国際出願の言語: 日本語

(26) 国際公開の言語: 日本語

(30) 優先権データ:
特願 2014-079953 2014 年 4 月 9 日(09.04.2014) JP

(71) 出願人: 日立オートモティブシステムズ株式会社 (HITACHI AUTOMOTIVE SYSTEMS, LTD.) [JP/JP]; 〒3128503 茨城県ひたちなか市高場２５２０番地 Ibaraki (JP).

(72) 発明者: 堀田　勇樹(HORITA, Yuki); 〒1008280 東京都千代田区丸の内一丁目６番６号　株式会社日立製作所内 Tokyo (JP). 谷道　太雪(TANIMICHI, Taisetsu); 〒3128503 茨城県ひたちなか市高場２５２０番地日立オートモティブシステムズ株式会社内 Ibaraki (JP). 長船　辰昭(OSAFUNE, Tatsuaki); 〒1008280 東京都千代田区丸の内一丁目６番６号　株式会社日立製作所内 Tokyo (JP).

(74) 代理人: 一色国際特許業務法人(ISSHIKI & CO.); 〒1050004 東京都港区新橋２丁目１２番７号 労金新橋ビル Tokyo (JP).

(81) 指定国 (表示のない限り、全ての種類の国内保護が可能): AE, AG, AL, AM, AO, AT, AU, AZ, BA, BB, BG, BH, BN, BR, BW, BY, BZ, CA, CH, CL, CN, CO, CR, CU, CZ, DE, DK, DM, DO, DZ, EC, EE, EG, ES, FI, GB, GD, GE, GH, GM, GT, HN, HR, HU, ID, IL, IN, IR, IS, KE, KG, KN, KP, KR, KZ, LA, LC, LK, LR, LS, LU, LY, MA, MD, ME, MG, MK, MN, MW, MX, MY, MZ, NA, NG, NI, NO, NZ, OM, PA, PE, PG, PH, PL, PT, QA, RO, RS, RU, RW, SA, SC, SD, SE, SG, SK, SL, SM, ST, SV, SY, TH, TJ, TM, TN, TR, TT, TZ, UA, UG, US, UZ, VC, VN, ZA, ZM, ZW.

(84) 指定国 (表示のない限り、全ての種類の広域保護が可能): ARIPO (BW, GH, GM, KE, LR, LS, MW, MZ, NA, RW, SD, SL, ST, SZ, TZ, UG, ZM, ZW), ユーラシア (AM, AZ, BY, KG, KZ, RU, TJ, TM), ヨーロッパ (AL, AT, BE, BG, CH, CY, CZ, DE, DK, EE, ES, FI, FR, GB, GR, HR, HU, IE, IS, IT, LT, LU, LV, MC, MK, MT, NL, NO, PL, PT, RO, RS, SE, SI, SK, SM, TR), OAPI (BF, BJ, CF, CG, CI, CM, GA, GN, GQ, GW, KM, ML, MR, NE, SN, TD, TG).

添付公開書類:
— 国際調査報告（条約第 21 条(3)）

(54) Title: TRAVEL CONTROL DEVICE, ONBOARD DISPLAY DEVICE, AND TRAVEL CONTROL SYSTEM

(54) 発明の名称 : 走行制御装置、車載用表示装置、及び走行制御システム

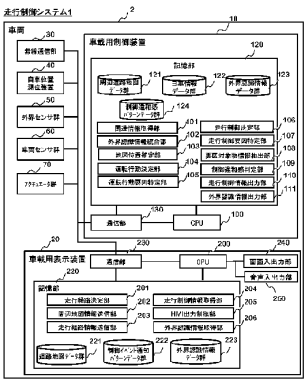

1 Travel control system
2 Vehicle
10 Onboard control device
20 Onboard display device
30 Wireless communication unit
40 Host vehicle position pinpointing device
50 External surroundings sensor group
60 Vehicle sensor group
70 Actuator group
101 Relevant information acquisition unit
102 External surroundings recognition information consolidation unit
103 Map position estimation unit
104 Driving action determination unit
105 Driving action factor specification unit
106 Travel control determination unit
107 Travel control factor specification unit
108 Factor target information extraction unit
109 Control sense-of-discomfort determination unit
110 Travel control information output unit
111 External surroundings recognition information output unit
120 Storage unit
121 Area road map data group
122 Host vehicle information data group
123 External surroundings recognition information data group
124 Control sense-of-discomfort pattern data group
130 Communication unit
201 Travel route determination unit
202 Area map information transmission unit
203 Travel route information transmission unit
204 Travel control information acquisition unit
205 HMI output control unit
206 External surroundings recognition information acquisition unit
220 Storage unit
221 Route map data group
222 Control event notification pattern data group
223 External surroundings recognition information data group
240 Screen input/output unit
250 Audio input/output unit

(57) Abstract: A travel control system (1) having: an onboard control device (10) installed in a vehicle (2), the onboard control device (10) controlling the traveling of the vehicle (2); and an onboard display device (20) communicably connected with the onboard control device (10), the onboard display device (20) using a screen display and/or audio output to present information to an occupant of the vehicle (2), wherein: the onboard control device (10) acquires external surroundings recognition information recognized by an external surroundings sensor (50) and/or out-of-vehicle communication, determines driving action specifics that should be taken by the vehicle (2) on the basis of the external surroundings recognition information, specifies a driving action factor that is the reason for determining the driving action specifics, and outputs the driving action specifics and the specified driving action factor; and the onboard display device (20) acquires the driving action specifics and the driving action factor outputted by the onboard control device (10) and gives notification of the driving action specifics and the driving action factor by using a screen display and/or audio output, thereby reducing any instability and/or sense of discomfort experienced by the driver and/or occupants due to the automatic travel control of the vehicle (2).

(57) 要約:

[続葉有]

WO 2015/156146 A1

車両（２）に搭載され前記車両（２）の走行を制御する車載用制御装置（１０）と、前記車載用制御装置（１０）と通信可能に接続され前記車両（２）の乗員に画面表示や音声出力を用いて情報を提示する車載用表示装置（２０）と、を有する走行制御システム（１）であって、前記車載用制御装置（１０）は、外界センサ（５０）かつ／または車外通信により認識した外界認識情報を取得し、前記外界認識情報に基づいて前記車両（２）が取るべき運転行動内容を決定し、前記運転行動内容を決定する理由になった運転行動要因を特定し、前記運転行動内容と前記特定した運転行動要因を出力し、前記車載用表示装置（２０）は、前記車載用制御装置（１０）が出力した運転行動内容と運転行動要因を取得し、画面表示や音声出力を用いて前記運転行動内容と運転行動要因を通知することで、車両（２）の自動走行制御が運転者や乗員に与える違和感や不安を低減する。

明　細　書

発明の名称 ：

走行制御装置、車載用表示装置、及び走行制御システム

技術分野

[0001]　本発明は、走行制御装置、車載用表示装置、及び走行制御システムに関する。

背景技術

[0002] ＝＝＝参照による取り込み＝＝＝

本出願は、２０１４年４月９日に出願された日本特許出願第２０１４－７９９５３号の優先権を主張し、その内容を参照することにより、本出願に取り込む。

レーダやカメラ等の車載外界センサを用いて車両周辺の状況を認識し、車両の走行を自動制御するシステムが知られている。このようなシステムでは、制御が行われた際、運転者や乗員がその制御の目的を咄嗟に把握することができず違和感を覚えることがあるという問題がある。また、システムが運転の主導権を持つ自動運転制御では、車両がどのような意志で一連の走行制御を実施しているのか把握できず、運転者や乗員が不安に感じる場合があるという課題がある。

[0003]　この点、特許文献１には、車両周辺の障害物の状況や車両の目標軌跡を車載用表示装置に表示する技術が開示されている。特許文献１に開示されている技術によれば、車両周辺の認識した障害物の状況や自車両の目標軌跡を車載用表示装置等において提示することにより、運転者や乗員に今後の走行軌道を認識させることができる。

先行技術文献

特許文献

[0004] 特許文献1：特開２００８－１９１７８１号公報

発明の概要

発明が解決しようとする課題

[0005] しかし、車両の走行軌道を表示することで今後の操舵制御を運転者や乗員に認識させることができるが、加減速制御に関しては表現できないため、依然として運転者や乗員が予期せぬ加減速制御に対して違和感を覚える場合があるという課題がある。また、走行軌道は走行制御内容を決定した結果であり、どのような目的に基づいて一連の走行制御が決定されているのかを示すことができないため、運転者や乗員は依然として車両がどのような意志で運転されているか把握できず、不安を感じる場合があるという問題が残る。

[0006] 上記の及び他の課題を考慮して、本発明の一の目的は、車両の自動走行制御が運転者や乗員に与える違和感や不安の低減を図ることである。

課題を解決するための手段

[0007] 上記の問題を解決するために、本発明の一態様は，車両に搭載され、前記車両の走行を制御するための走行制御システムであって、進路上の障害物及び他車両を含む自車両外部の対象物を捉える外界センサから受信することにより、又は路側からの情報を車外通信により受信することにより外界認識情報を取得するための外界認識情報取得部と、前記外界認識情報取得部から受信する前記外界認識情報と、自車両の位置、及び走行速度を含む情報である自車両情報とに基づいて、当該自車両が取るべき運転行動内容を決定するための運転行動決定部と、前記運転行動決定部から受信する、前記運転行動内容を決定する理由になった運転行動要因を特定するための運転行動要因特定部と、前記運転行動内容と、当該運転行動内容について特定した運転行動要因とを出力するための運転行動情報出力部と、当該車両の走行制御内容を決定する、当該車両の運転行動を示す情報であり、選択されている運転行動の種類とその運転行動を選択した要因の情報を含む前記運転行動情報を取得する運転行動情報取得部と、前記運転行動情報を表示するための表示部と、前記運転行動情報の内容を音声出力する音声出力部との少なくともいずれかを有し、前記運転行動情報に含まれる運転行動の種類を運転行動要因と併せて提示する運転行動情報出力部とを備える。

発明の効果

[0008] 本発明によれば、運転者や乗員が自動走行制御に対して感じる違和感や不安を軽減することができる。

図面の簡単な説明

[0009] [図1]図１は、本発明の第１実施形態による走行制御システム１の構成の一例を示す機能ブロック図である。

[図2]図２は、本発明の第１実施形態の車載用制御装置１０の走行制御に関する状態遷移図の一例の説明図である。

[図3]図３は、本発明の第１実施形態の車載用制御装置１０が保持する制御違和感パターンデータ群１２４のデータ構造の一例の説明図である。

[図4]図４は、本発明の第１実施形態の車載用表示装置２０が保持する制御イベント通知パターンデータ群２２２のデータ構造の一例の説明図である。

[図5]図５は、本発明の第１実施形態の車載用制御装置１０において実行される走行制御処理のフローの説明図である。

[図6]図６は、本発明の第１実施形態の車載用制御装置１０において実行される通常走行モードにおける運転行動内容決定処理のフローの説明図である。

[図7]図７は、本発明の第１実施形態の車載用制御装置１０において実行される通常走行モードにおける走行制御内容決定処理のフローの説明図である。

[図8]図８は、本発明の第１実施形態の車載用制御装置１０及び車載用表示装置２０において実行される走行制御情報出力処理のフローを示す。

[図9]図９は、本発明の第１実施形態の車載用制御装置１０が出力する外界認識情報メッセージのフォーマットの一例の説明図である。

[図10]図１０は、本発明の第１実施形態の車載用制御装置１０において実行される違和感判定処理のフローの説明図である

[図11]図１１は、本発明の第１実施形態の車載用制御装置１０が出力する制御イベントメッセージのフォーマットの一例の説明図である。

[図12]図１２は、本発明の第１実施形態の車載用表示装置２０において実行されるＨＭＩ出力内容決定処理のフローを示す。

[図13]図１３は、本発明の第１実施形態の走行制御システム１の動作を説明するための具体的なシーンの一例である信号交差点シーンの説明図である。

[図14]図１４は、本発明の第１実施形態の車載用表示装置２０による信号交差点シーンにおける表示方法の一例の説明図である。

[図15]図１５は、本発明の第１実施形態の走行制御システム１の動作を説明するための具体的なシーンの一例である車線変更シーンの説明図である。

[図16]図１６は、本発明の第１実施形態の車載用表示装置２０による車線変更シーンにおける表示方法の一例の説明図である。

[図17]図１７は、本発明の第２実施形態の車載用制御装置１０において実行される違和感判定処理のフローの説明図である。

[図18]図１８は、本発明の第２実施形態の車載用制御装置１０が保持する制御違和感パターンデータ群のデータ構造の一例の説明図である。

[図19]図１９は、本発明の第３実施形態の走行制御システム１の動作を説明するための具体的なシーンの一例である信号交差点シーンの説明図である。

[図20]図２０は、本発明の第３実施形態の車載用表示装置２０による信号交差点シーンにおける表示方法の一例の説明図である。

発明を実施するための形態

[0010] 以下，図面を参照して，本発明の実施形態について説明する。

第１実施形態

図１は、本発明の第１実施形態による走行制御システム１の構成の一例を示す機能ブロック図である。

[0011] 図１に示すように、本実施形態に係る走行制御システム１は、車両２に搭載され、車両２の走行の一部または全てを自動で制御するシステムであり、車載用制御装置１０と、車載用表示装置２０、無線通信部３０、自車位置測位装置４０、外界センサ群５０、車両センサ群６０、アクチュエータ群７０、等を含んで構成される。

[0012] 車載用制御装置１０は、例えば、車両２に搭載されたＥＣＵ（Electronic Control Unit）等であり、処理部と、記憶部１２０と、通信部１３０と、を

有する。なお、車載用制御装置１０の形態に特に制限はなく、例えば、車両２の先進運転支援システム（ＡＤＡＳ：Advanced Driver Assistance Systems）を実現するための走行制御装置でもよいし、外界センサ群５０の装置に統合されていてもよいし、車両２のユーザが車両ネットワークに接続したスマートフォン等の外部装置でもよい。

[0013] 処理部は、例えば、ＣＰＵ１００（Central Processing Unit：中央演算処理装置）及びＲＡＭ（Random Access Memory）などのメモリなどを含んで構成され、記憶部１２０に格納されている所定の動作プログラムを実行することで、車載用制御装置１０の機能を実現する処理を行う。

[0014] 記憶部１２０は、例えば、ＨＤＤ（Hard Disk Drive）、フラッシュメモリ、ＲＯＭ（Read Only Memory）などの記憶装置を含んで構成され、処理部が実行するプログラム、及び本システムの実現に必要なデータ群などを格納している。本実施形態では、特に、車両２の走行制御を決定する際に必要な各種情報（周辺道路地図、走行経路情報、自車位置情報、外界認識情報、車両センサ情報等）を取得する関連情報取得部１０１，無線通信部３０や外界センサ群５０から取得した車外のオブジェクト情報を統合管理する外界認識情報統合部１０２、自車両や車外のオブジェクト群の道路地図上における位置を推定する地図位置推定部１０３、右左折や車線変更等の自車両の取るべき運転行動を決定する運転行動決定部１０４、運転行動決定部１０４において決定した運転行動の要因対象物を特定する運転行動要因特定部１０５、操舵や加減速等の自車両の取るべき走行制御を決定する走行制御決定部１０６、走行制御決定部１０６において決定した走行制御の要因対象物を特定する走行制御要因特定部１０７、運転行動要因特定部１０５や走行制御要因特定部１０７で特定した要因対象物の情報を抽出する要因対象物情報抽出部１０８、運転行動決定部１０４や走行制御決定部１０６で決定した運転行動や走行制御の内容が違和感を与えるかどうかを判定する制御違和感判定部１０９、前記決定した運転行動や走行制御に関連する情報を外部に出力する走行制御情報出力部１１０、外界認識情報統合部１０２で統合管理している外界認識

情報を外部に出力する外界認識情報出力部１１１、等のプログラム、及び、周辺道路地図データ群１２１、自車情報データ群１２２、外部認識情報データ群１２３、制御違和感パターンデータ群１２４、等が記憶部１２０に格納される。

[0015] 車載用制御装置１０の周辺道路地図データ群１２１は，運転行動や走行制御を決定するために必要な車両２周辺の道路に関するデジタル道路地図に関するデータの集合体であり、例えば、道路のネットワーク構造、属性（道路の種別，制限速度，進行方向等）、形状（道路のレーン形状，交差点の形状等），及びランドマーク（道路標識，路面上のペイント等）等の情報が含まれる。この周辺道路地図データ群１２１は、本実施形態においては、車載用表示装置２０から取得する。車載用表示装置２０の周辺地図情報送信部２０２が車両２の地図上の位置に応じて随時、車載用制御装置１０に必要な周辺道路の地図データを、車載ネットワーク等を通じて送信しており、車載用制御装置１０の関連情報取得部１０１がそれを取得することで、周辺道路地図データ群１２１には常時車両２の周辺道路の地図データが格納されるように構成されている。なお、周辺道路地図データ群１２１の管理方法は、本実施形態記載の方式に限る必要はなく、車載用制御装置１０に予め全体の地図データを格納していても良いし、無線通信機３０を経由して車両２の外部から受信するように構成されていても良い。

[0016] 車載用制御装置１０の自車情報データ群１２２は、例えば、自車の位置情報や、車両センサ群６０から車載ネットワーク経由で取得可能な自車の走行状態等を表す情報、等に関するデータの集合体である。なお、自車の位置情報とは、自車位置測位装置４０により測位された自車の地理的な位置情報を示すデータや，地図位置推定部１０３の推定結果等，自車位置に関するデータを表す。

[0017] 車載用制御装置１０の外界認識情報データ群１２３は、例えば、外界センサ群５０から取得された車両２周辺の障害物（他車両、自転車、歩行者、落下物等）や特徴物（道路標識、白線、ランドマーク等）の検出結果や、無線

通信部３０経由で取得された車両２の外部環境に関する情報（他車両情報、信号情報、交通状況等）、等、車外のオブジェクト情報に関するデータの集合体である。

[0018] 車載用制御装置１０の制御違和感パターンデータ群１２４は、運転行動や走行制御が運転者や乗員に違和感を与えると考えられるとして選定したパターンを示すデータの集合体である。

[0019] 通信部１３０は、例えば、Ｅｔｈｅｒｎｅｔ（登録商標）又はＣＡＮ（Controller Area Network）等の通信規格に準拠したネットワークカード等を含んで構成され、車両２に搭載された他の装置と各種プロトコルに基づきデータの送受信を行う。なお、通信部１３０と車両２に搭載された他の装置との間の接続形態は、Ｅｔｈｅｒｎｅｔ（登録商標）のような有線接続に限定されることはなく、Ｂｌｕｅｔｏｏｔｈ（登録商標）や無線ＬＡＮ（Local Area Network）などの近距離無線接続であってもよい。

[0020] 車載用表示装置２０は、例えば、車両２に搭載されたディスプレイ装置等であり、処理部と、記憶部２２０と、通信部２３０と、画面入出力部２４０と、音声入出力部２５０と、を有する。なお、車載用表示装置２０の形態に特に制限はなく、例えば、ナビゲーション装置でもよいし、車両２のユーザが車両ネットワークに接続したスマートフォン等の外部装置でもよい。

[0021] 処理部は、例えば、ＣＰＵ２００及びＲＡＭなどのメモリなどを含んで構成され、記憶部２２０に格納されている所定の動作プログラムを実行することで、車載用表示装置２０の機能を実現する処理を行う。

[0022] 記憶部２２０は、例えば、ＨＤＤ、フラッシュメモリ、ＲＯＭなどの記憶装置を含んで構成され、処理部が実行するプログラム、及び本システムの実現に必要なデータ群などが格納される。本実施形態では、特に、車両２の走行すべき、あるいは、走行が推奨される道路地図上の経路を決定する走行経路決定部２０１，車載用制御装置１０の処理に必要な車両２周辺の地図情報を送信する周辺地図情報送信部２０２、前記走行経路決定部２０１で決定した走行経路情報を車載用制御装置１０に送信する走行経路情報送信部２０３

、車載用制御装置１０から出力された走行制御情報を取得する走行制御情報取得部２０４、走行制御情報取得部で取得した走行制御情報に基づいて画面や音声を出力するＨＭＩ出力制御部２０５、等のプログラム、及び、道路地図データ群２２１、制御イベント通知パターンデータ群２２２、外界認識情報データ群２２３、等が記憶部２２０に格納される。

[0023] 車載用表示装置２０の道路地図データ群２２１は、例えば、道路のネットワーク構造、属性（道路の種別，制限速度，進行方向等）、形状（道路のレーン形状，交差点の形状等），及びランドマーク（道路標識，路面上のペイント等）等の情報を含むデジタル道路地図に関するデータの集合体である。対象とする道路地図のエリアに関する制限はなく，例えば，全世界の道路地図データを含んでいても良いし，欧州や米国等，特定の地域や国に関する道路地図データのみ含んでいても良いし，車両２の位置の周辺の局所的な道路地図データのみを含んでいても良い。なお，本明細書において、道路とは、車両が走行可能な道を意味し、公道に限ることはなく、私道を含んでも良いし、駐車場等施設内の走行路を含んでも良い。

[0024] 車載用表示装置２０の制御イベント通知パターンデータ群２２２は、車載用制御装置１０から提供される制御イベント情報を、どのようにして画面入出力部２４０や音声入出力部２５０を通じて運転者あるいは乗員に通知するかを定めるパターンを示すデータの集合体である。

[0025] 車載用表示装置２０の外界認識情報データ群２２３は、例えば、車載用制御装置１０から提供される統合された外界認識情報を格納している。

[0026] 通信部２３０は、例えば、Ｅｔｈｅｒｎｅｔ（登録商標）又はＣＡＮ等の通信規格に準拠したネットワークカード等を含んで構成され、車両２に搭載された他の装置と各種プロトコルに基づきデータの送受信を行う。なお、通信部２３０と車両２に搭載された他の装置との間の接続形態は、Ｅｔｈｅｒｎｅｔ（登録商標）のような有線接続に限定されることはなく、Ｂｌｕｅｔｏｏｔｈ（登録商標）や無線ＬＡＮなどの近距離無線接続であってもよい。

[0027] 無線通信部３０は、例えば、ＬＴＥ（Long Term Evolution）等の長距離無

線通信規格、あるいは無線ＬＡＮ、ＤＳＲＣ（Dedicated Short Range Communications）等の近距離無線通信規格に準拠したネットワークカード等を有し、例えば、１台又は複数台の車両の走行を支援するサーバ、１台又は複数台の道路上に設置される路側機、１台又は複数台の他車両に搭載された無線通信部３０、１台又は複数台の人等が保有する通信端末（図示省略）等の少なくともいずれかとデータ通信が可能となるように構成される。

[0028] 自車位置測位装置４０は、車両２の地理的な位置を測位し、その情報を提供する装置であり、例えば、汎地球航法衛星システム（ＧＮＳＳ）受信装置が相当する。自車位置測位装置４０は、単純にＧＮＳＳ衛星から受信する電波に基づいた測位結果を提供するように構成されていても良いし、車両２の移動速度及び進行方位角等、外界センサ群５０や車両センサ群６０から取得可能な情報を活用して位置補間及び誤差補正を行うように構成されていても良い。

[0029] なお、自車位置測位装置４０は、車両２の地理的な位置を測位する装置であれば、ＧＮＳＳ受信装置以外の装置であってもよい。例えば、自車位置測位装置４０は、路側機から車両２が走行している道路を識別する情報及びその道路における車両２の位置を示す情報（例えばその道路の起点からの距離を示す情報）を取得し、それに基づいて車両２の地理的な位置を測位してもよい。また、自車位置測位装置４０が取得する車両２の位置を示す情報は、典型的には、後述する緯度及び経度のような座標値であるが、車両２が走行している道路を特定するために使用できる情報であれば、上記以外の情報であってもよい。例えば、車両２の位置を示す情報は、車両２が走行している道路及びその道路上の位置を示す情報であってもよい。

[0030] 外界センサ群５０は，車両２周辺の一定範囲の障害物（他車両、自転車、歩行者、落下物等）や特徴物（道路標識、白線、ランドマーク等）を認識することができるセンサ群であり、例えば、カメラ装置、レーダ、レーザーレーダ、ソナー等が該当する。外界センサ群５０は、検出した車両２周辺の障害物や特徴物の情報（例えば、車両２からの相対距離と相対角度等）を車載

ネットワーク上に出力しており、車載用制御装置１０は車載ネットワークを通じて前記出力結果を取得できるように構成されている。なお、本実施形態では、外界センサ群５０で障害物や特徴物を検出する処理を実施する構成になっているが、外界センサ群５０が未処理のままデータを出力し、車載用制御装置１０等の他装置で検出処理を行っても良い。

[0031] 車両センサ群６０は、車両２の各種部品の状態（例えば走行速度、操舵角、アクセルの操作量、ブレーキの操作量等）を検出している装置群であり、例えば、ＣＡＮ等の車載ネットワーク上に、検出した状態量を定期的に出力している。車載用制御装置１０を含む車載ネットワークに接続された装置は、各種部品の状態量を取得することが可能となるように構成されている。

[0032] アクチュエータ群７０は、車両２の動きを決定する操舵、ブレーキ、アクセル等の制御要素を制御する装置群であり、運転者によるハンドル、ブレーキペダル、アクセルペダル等の操作情報や車載用制御装置１０から出力される目標制御値に基づいて、車両２の動きを制御するように構成されている。

[0033] 本実施形態における「運転行動」と「走行制御」の関係について説明する。本実施形態における「運転行動」とは、運転主体（運転者あるいは走行制御システム）がどのような目的をもって車両を制御している、あるいは制御しようとしているかを示す行動種別を表す。具体的には、「通常走行」「左折」「右折」「車線変更」「駐停車」等が運転行動種別に該当する。

[0034] それに対し、本実施形態における「走行制御」とは、運転行動という目的を実現するために実施する特徴的な一連のアクチュエータ制御の種別を表す。そのため、対象とする運転行動に応じて異なる走行制御種別が考えられる。例えば、運転行動が「通常走行」の場合は、走行制御種別として「加速走行制御」「減速走行制御」「定常走行制御」等が考えられるのに対し、運転行動が「車線変更」の場合は、走行制御種別として「車線維持走行制御」「車線変更走行制御」等が考えられる。

[0035] 人は、目的地に到達するという大目的のもと、道路形状やその場の状況に応じてどの運転行動を取るべきかを判断し、運転行動を随時切り替えながら

車両を運転（すなわち、車の走行を制御）している。自動運転システムのように走行制御システムが運転主体の場合も同様で、センサ等を用いて周辺環境を認識しながら、どの運転行動を取るべきかを判断し、それに基づいてどのように車両を走行制御するかを決定する流れとなる。

[0036] 図２は、走行制御システム１が車両２の走行制御を実施する場合の状態遷移図の一例を表している。３０１～３０５は車両２における「運転行動」の状態（これ以降、運転行動の状態のことを「モード」と表現する）に該当し、その運転行動の状態の中に含まれる内部状態（例えば、運転行動が「通常走行」の場合の３１１～３１３）は、その運転行動における「走行制御」の状態に該当する。

[0037] 通常走行モード３０１は、例えば、現在の道なり（道路あるいは車線）に沿って走行する運転行動の状態を意味する。通常走行モード３０１には、定常走行制御３１１、減速走行制御３１２、加速走行制御３１３という３つの走行制御種別（状態）が定義されている。減速走行制御３１２は車両を減速させる走行制御状態を、加速走行制御３１３は車両を加速させる走行制御状態を意味する。定常走行制御３１１は、減速走行制御３１２及び加速走行制御３１３に含まれないすべての状態を表す。通常走行モード３０１では、走行環境の状況に応じてこれらの走行制御状態が切り替わりながら道なりに沿って車両が進んでいく。上述したように、本実施形態において「走行制御」は、該当の運転行動の目的を実現するために実施する一連のアクチュエータ制御のうち特徴的なものを表現したものであり、本実施形態では、「減速走行制御」と「加速走行制御」が特徴的な「走行制御」の状態として抽出されていることを意味する。本実施形態で定義した走行制御種別に限定する必要はなく、車両２に搭載している走行制御の機能に応じて、任意の走行制御種別を規定できることに留意されたい。また、運転行動種別についても同様のことが言え、本実施形態の運転行動種別に限定する必要はなく、例えば通常走行モードを「追従走行モード」と「単独走行モード」のように制御方式に応じて細かく分類しても良いし、車線変更モードを「追い越しモード」等の

ように目的に応じて細かく分類しても良いし、別の分類軸で運転行動種別を定義しても良い。

[0038] 右折モード３０２は、例えば、交差点等において右折する運転行動の状態を意味する。右折モード３０２には、定常走行制御３２０と停止制御３２１という２つの走行制御種別（状態）が定義されている。定常走行制御３２０は、右折の走行軌道に従って舵角や加減速を制御する状態、停止制御３２１は、他の障害物が車両２の走行軌道中に存在するあるいは走行軌道と交差するため、当該障害物が車両２の走行軌道を離れるあるいは通過するまで停止して待機する状態、である。停止制御３２１は、例えば、対向車線から他車両が交差点に入ってくるために右折待機している状態が該当する。

[0039] 左折モード３０３は、例えば、交差点等において左折する運転行動の状態を意味する。右折モード３０２と同様、左折モード３０３には、定常走行制御３３０と停止制御３３１という２つの走行制御種別が定義されている。左折モード３０３における停止制御３３１は、例えば、横断歩道を歩行者や自転車が横断中の場合に横断歩道前で停止する状態が該当する。

[0040] 車線変更モード３０４は、例えば、複数車線の道路を走行中に車線変更するという運転行動の状態を意味する。車線変更モード３０４には、車線維持走行制御３４０、車線変更走行制御３４１という２つの走行制御種別が定義されている。車線変更の制御に移る前に変更先の車線への進入に対する安全が確認されるまでは、現在の車線を維持して走行するのが通常である。車線維持走行制御３４０は、この制御状態を意味する。一方、車線変更走行３４１は、変更先の車線への進入に対する安全性が確認され、実際に車線変更の制御をする状態を意味する。そして、無事に車線変更が完了すると、通常走行モード３０１に戻る。

[0041] 駐車モード３０５は、例えば、駐車場や路上において車両２を所定の場所に駐車するという運転行動の状態を意味する。駐車モード３０５には、定常走行制御３５０と停止制御３５１という２つの走行制御種別が定義されている。定常走行制御３５０は、駐車のための走行軌道に従って舵角や加減速を

制御する状態、停止制御３５１は、他の障害物が車両２の走行軌道中に存在するあるいは走行軌道と交差するため当該障害物が車両２の走行軌道を離れるあるいは通過するまで停止して待機する状態、である。

[0042] 車載用制御装置１０の制御違和感パターンデータ群１２４のデータ構造の一例を、図３を用いて説明する。

[0043] 制御違和感パターンデータ群１２４は、運転者や乗員に違和感を与える可能性がある制御イベントに関する情報を示すデータの集合体である。本実施形態における制御イベントとは、例えば、運転行動内容や走行制御内容の特徴的な変化である。これは、図２に示した走行制御の状態遷移図における状態遷移イベントに相当し、図２におけるモードレベルの遷移が運転行動内容の変化、モード内部の状態遷移が走行制御内容の変化にそれぞれ相当する。

[0044] 運転行動種別４０１、及び走行制御種別４０２は、該当制御イベントが関連する運転行動あるいは走行制御の種別を示す。該当制御イベントが運転行動内容の変化を表す場合は、運転行動種別４０１にはどの運転行動のモードに遷移したのかを示す値が格納され、走行制御種別４０２には特に限定しないことを示す値（図３の例では「Ａｎｙ」）が格納される。一方、走行制御内容の変化を表す場合は、運転行動種別４０１にはどの運転行動モードに関する走行制御内容の変化なのかを示す値が格納され、走行制御種別４０２にはどの走行制御状態に遷移したのかを示す値が格納される。例えば、図３における１行目は、運転行動モードが左折に遷移するイベントであるため、運転行動種別４０１には「左折」、走行制御種別４０２には「Ａｎｙ」が格納される。また、例えば、図３における９行目は、通常走行モードの中で走行制御の状態が減速走行に遷移するイベントであるため、運転行動種別４０１には「通常走行」、走行制御種別４０２には「減速」が格納される。

[0045] 要因４０３は、運転行動あるいは走行制御の状態が遷移した要因に関する情報である。状態遷移の要因としては、例えば、停止車両、低速車両、先行車、横断者等の周辺の障害物に関するもの、カーブ、速度制限、信号、渋滞等の道路形状や規則、交通状態に関するもの、ユーザの設定によるもの、等

が考えられる。例えば、図３における１行目は、左折モードに遷移する要因として「設定経路」が指定されているが、これはユーザあるいは走行制御システムが設定した目的地までの走行経路で該当交差点での左折指定に従って、左折モードに遷移するイベントを意味している。例えば、図３における４行目は、「ユーザ指定」が要因として指定されているが、これは運転者あるいは乗員から車載用表示装置２０等のＨＭＩ（Human Machine Interface）装置を介して駐車指示を受けたことにより駐車モードに遷移するイベントを意味している。例えば、図３における９行目は、通常走行モードで減速走行制御の状態に遷移した原因が信号であることを意味する。

[0046] 特有条件４０４は、当該エントリが適用される要因４０３の条件を表す。例えば、９行目は、要因４０３として「信号」が設定されていると同時に、特有条件４０４として「信号状態≠赤」と設定されている。つまり、９行目のエントリは、信号が原因のすべての減速が適用されるわけではなく、信号状態が赤ではない場合に限り適用される。これは、赤信号で減速するのは違和感を与えないのに対し、青信号時に減速するのは違和感を与えるためである。車載用制御装置１０が車両２の外界センサ群５０等を通じて路側から対面する信号の状態が一定時間後に青から黄に遷移するとの情報を取得して利用する場合、車両２は青信号であっても減速することが考えられる。なお、ここでは簡単のため条件そのものを記載しているが、実際には、例えば、特有条件を規定する関数が定義されその関数に対する参照が格納される。

[0047] 違和感レベル４０５は、例えば、運転行動種別４０１、走行制御種別４０２、要因４０３で規定される制御イベントに対して運転者や乗員が受ける違和感のレベルを数値化したものである。この違和感レベルの設定は、事前に統計的に解析して固定的に設定しても良いし、運転者や乗員に車載用制御装置１０等のＨＭＩ装置を介して違和感を受けた制御に対して反応してもらうことで学習しながら動的に変更しても良い。本実施形態では、違和感レベルとして４段階（０～３）に分類しているが、違和感のレベルを表現できるものであれば特に制限はない。

[0048] 車載用表示装置２０の制御イベント通知パターンデータ群２２２のデータ構造の一例を、図４を用いて説明する。

[0049] 制御イベント通知パターンデータ群２２２は、車載用制御装置１０から提供される制御イベント情報をどのようにして画面入出力部２４０や音声入出力部２５０を通じて運転者あるいは乗員に通知するかを定めるパターンを示すデータの集合体である

[0050] 運転行動種別４１１、走行制御種別４１２、要因４１３は、それぞれ制御違和感パターンデータ群１２４の４０１～４０３に該当する。

[0051] 音声通知設定４１４は、当該エントリに対応する制御イベント情報を受信した際に、その内容を音声で通知するかどうかの設定である。本実施形態では、例えば、「通知」「非通知」「未指定」のいずれかの値が格納される。「通知」「非通知」は、ユーザが明示的に設定したことを表しており、「通知」は音声通知をする、「非通知」は音声通知をしないことを意味する。また、「未指定」は、ユーザが明示的に設定していないことを表している。

[0052] 通知回数４１５は、当該エントリに関する音声通知を何回実施したかを表している。この通知回数は、音声通知指定４１４が「未指定」の場合に用いられ、ユーザが明示的に音声通知要否を設定している場合は用いられない。

[0053] 続いて，走行制御システム１の動作について説明する。走行制御システム１における車載用制御装置１０は、主要な処理として、車両２の周辺の状況に基づいて走行制御内容を決定しアクチュエータ群７０に対して目標制御値を出力する走行制御処理を実行する。

[0054] 本実施形態の走行制御システム１において実行される走行制御処理のフロー４５０を図５に示す。

[0055] 車載用制御装置１０の走行制御決定部１０６は、まず、所定時間待機後（ステップ（Ｓ）４５１）、自車情報データ群１２２から自車情報を取得する（ステップ４５２）。ここでの所定時間待機とは，走行制御内容の算出のトリガーがかかるまでの時間を待機することである。走行制御内容の算出のトリガーは、一定時間毎に実施されるようにタイマーでかけても良いし、走行

制御内容の再計算の必要性を検知してオンデマンドにかけても良い。ステップ４５２で取得する自車情報は、例えば、車両２の位置情報、走行状態情報、走行経路情報等を含む。車両２の位置情報とは、自車位置測位装置４０から取得されるような緯度・経度の情報でもよいし、車両２が存在する道路リンク等の道路地図上の位置情報でもよい。車両２の走行状態情報とは、例えば、進行方位あるいは道路上の進行方向や、速度、加速度、ブレーキ状態、アクセル開度、ギア位置等、車両センサ群６０等から取得されるような情報である。車両２の走行経路情報とは、例えば、車載用表示装置２０の走行経路決定部２０１が決定した車両２がこれから走行すべき、あるいは、走行が推奨される道路地図上の経路に関する情報である。これらの自車情報は、車載用制御装置１０の関連情報取得部１０１によって、車両ネットワーク等を介して適切な外部装置等から取得され、自車情報データ群１２２に格納される。例えば、走行経路情報の例で説明すると、車載用表示装置２０の走行経路情報送信部２０３が、通信部２３０を介して車載ネットワーク上に走行経路情報を出力し、車載用制御装置１０の関連情報取得部１０１がそれを受信、自車情報データ群１２２に格納するという流れになる。

[0056] 次にステップ４５３で、車載用制御装置１０の走行制御決定部１０６は、外界認識情報データ群１２３から、後述する処理に関連する外界認識情報を取得する。外界認識情報データ群１２３には、関連情報取得部１０１によって外界センサ群５０や無線通信部３０等から適宜取得された車外のオブジェクト情報に関する情報が格納されており、例えば、車両２の周辺の障害物や特徴物の検出結果や、無線通信部３０経由で取得された車両２の外部環境に関する情報（他車両情報、信号情報、交通状況等）、等が含まれる。

[0057] ステップ４５３が完了すると、ステップ４５２やステップ４５３で取得した情報に基づいて、取るべき運転行動内容を決定する運転行動内容決定処理（Ｓ４５４）に移る。運転行動内容決定処理は、図２の走行制御の状態遷移図におけるモード間の状態遷移を決定する処理に相当する。そのため、運転行動内容決定処理のロジックは、どの運転行動モードであるかに応じて異な

るものになる。

[0058] 運転行動内容決定処理の具体例として、図６に通常走行モードにおける運転行動内容決定処理フロー５５０を示す。

[0059] 車載用制御装置１０の運転行動決定部１０４は、まず、ユーザによるモード指定があるかを確認する（ステップ５５１）。運転者あるいは乗員が車載用表示装置２０等のＨＭＩ装置を用いて走行制御システム１が取るべき運転行動を指定できるように走行制御システム１が構成されている場合、ユーザによる運転行動の指定があるとステップ５５１でＹｅｓとなる。すると、ステップ５６１に進み、運転行動決定部１０４が現在の運転行動モードをユーザ指定のモードに変更すると同時に、運転行動要因特定部１０５が運転行動決定要因を「ユーザ指定」に設定する。そして、ステップ５７１に進み、要因対象物情報抽出部１０８が、前記設定した運転行動決定要因に関連する対象物情報を抽出し、処理を終了する。ここで対象物とは、走行制御処理フロー４５０のステップ４５３で取得した外界認識情報に含まれるオブジェクトに該当する。この場合は、運転行動決定要因が「ユーザ指定」であり、特に該当する対象物は存在しないため、対象物情報には空集合が設定される。

[0060] ユーザによる運転行動の指定の例としては、自動駐車が考えられる。運転者が車両２を自動駐車させる際には、車載用表示装置２０等のＨＭＩを介して、自動駐車の指示を走行制御システム１に出すことになる。車載用制御装置１０は、その指示情報を通信部１３０経由で受信し、モード指定情報を「駐車モード」に設定し、記憶部１２０に記憶しておく。ステップ５５１では、このモード指定情報を参照することで、運転行動決定部１０４はユーザによる駐車モード指定があることを認識し、ステップ５６１に進み、上記で説明したような処理を行うことになる。

[0061] ステップ５５１に戻り、ユーザによる運転行動の指定がない場合（ステップ５５１でＮｏ）は、ステップ５５２で駐車予定地点に車両２が差し掛かったかを確認する。駐車予定地点とは、例えば、自動運転等において走行経路で設定された最終もしくは中間目的地である。その場合は、該目的地に到達

したかどうかが、ステップ５５２の判断基準となる。ステップ５５２で駐車予定地点に差し掛かったと判断すると、ステップ５６２で運転行動決定部１０４が現在の運転行動モードを駐車モード３０５に変更すると同時に、運転行動要因特定部１０５が運転行動決定要因を「設定経路」に設定する。ここで、「設定経路」は、自動運転等において予め走行経路が定められている場合に、その指示に従って運転行動内容を決定したことを意味する。駐車予定地点に差し掛かったかどうかは、例えば、車両２の位置と駐車予定地点の経路上の距離が一定以下になったかどうかで判断しても良いし、駐車予定地点までの想定到達時間が一定以下になったかどうかで判断しても良い。ステップ５６２が終わると、ステップ５７１に進み、要因対象物情報抽出部１０８が、前記設定した運転行動決定要因に関連する対象物情報を抽出し、処理を終了する。この場合、特に該当する対象物は存在しないため、対象物情報には空集合が設定される。

[0062] ステップ５５２に戻り、車両２が駐車予定地点とは無関係の場合（ステップ５５２でＮｏ）、ステップ５５３で左折予定地点に車両２が差し掛かったかを確認する。ステップ５５２の駐車予定地点と同様で、設定された走行経路において左折が指示されている地点に近づいたかどうかを判断し、もしも該当すれば（ステップ５５３でＹｅｓ）、ステップ５６３で運転行動モードを左折モード３０３に変更すると同時に、運転行動決定要因を「設定経路」に設定し、ステップ５７１に進む。

[0063] ステップ５５３で、車両２が左折予定地点とは無関係の場合、ステップ５５４に進み、右折予定地点に対して同様の処理を行う。また、ステップ５５４で、車両２が右折予定地点とは無関係の場合、ステップ５５５に進み、車線変更予定地点に対して同様の処理を行う。

[0064] 次に、ステップ５５６に進み、前方の同一車線上に駐停車車両が存在するかどうかを確認する。駐停車車両が存在するかどうかは、例えば、無線通信部３０もしくは外界センサ群５０から得られた外界認識情報データ群１２３に基づいて、車両２の走行車線上に他車両が停止しているかを確認すること

で判定可能である。なお、ここでは、駐停車車両が同一車線上にあっても、該駐停車車両の一部だけがはみ出しており、車両２が同一車線上で問題なく通過可能な場合は、駐停車車両が同一車線上に存在すると考えないものとする。もしも、駐停車車両が存在した場合は、運転行動モードを車線変更モード３０４に変更すると同時に、運転行動決定要因を「駐停車車両」に設定し、ステップ５７１に進む。ステップ５７１では、外界認識情報データ群１２３を参照し、該当駐停車車両の情報を抽出しておく。

[0065] ステップ５５６で、同一車線上に駐停車車両が存在しない場合、ステップ５５７に進み、同一車線上に低速車両が存在するかどうかを確認する。低速車両が存在するかどうかは、ステップ５５６と同様にして、外界認識情報データ群１２３から車両２の同一車線上前方を走行する車両やその周辺環境のデータを参照して、走行環境（制限速度、道路の混雑度、交通規則等）に対して必要以上に低速で走行している車両がいるかどうかを確認することにより判断する。もしも、低速車両が存在した場合は、運転行動モードを車線変更モード３０４に変更すると同時に、運転行動決定要因を「低速車両」に設定し、ステップ５７１に進む。ステップ５７１では、外界認識情報データ群１２３を参照し、該当低速車両の情報を抽出しておく。

[0066] ステップ５５７で、同一車線上に低速車両が存在しない場合は、ステップ５８０に進み、運転行動モードを通常走行モード３０１に設定する。すなわち、これは運転行動モードを変更しないことを意味している。そして、ステップ５８０の処理完了後、処理フローを終了する。

[0067] 以上に示したように、運転行動内容決定処理フロー５５０は、運転行動モードの状態遷移を判定するロジックツリーである。そのため、図６の例では、通常走行モード３０１の状態遷移判定の一例を示したが、当然のことながら、それ以外の運転行動モードにも異なるロジックツリーが存在する。また、通常走行モード３０１の状態遷移判定も、運転行動内容決定処理フロー５５０で示した内容に制限されることはなく、任意のロジックツリーが可能である。その中で、本実施形態において、運転行動内容決定処理フロー５５０

で特に特徴的なのは、状態遷移判定時にその要因となったものを特定しておき（ステップ５６１～５６７）、その対象物の情報を抽出する（ステップ５７１）点である。

[0068] 図５の走行制御処理フロー４５０に戻る。ステップ４５４の運転行動内容決定処理が終わると、次に走行制御内容決定処理（ステップ４５５）を実行する。走行制御内容決定処理は、運転行動内容決定処理（ステップ４５４）で決定した運転行動モードに基づいて、走行制御内容を決定する処理であり、図２の走行制御の状態遷移図におけるモード内部の状態遷移を決定する処理に相当する。そのため、走行制御内容決定処理のロジックは、どの運転行動モードであるかに応じて異なるものになる。

[0069] 走行制御内容決定処理の具体例として、図７に通常走行モードにおける走行制御内容決定処理フロー６００の一例を示す。

[0070] 車載用制御装置１０の走行制御決定部１０６は、まず、走行制御処理フロー４５０のステップ４５２及びステップ４５３で取得した自車情報及び外界認識情報に基づいて、目標軌道を算出する（ステップ６０１）。目標軌道の算出は、例えば、特許文献１に記載の方式に従い実施される。次に、ステップ６０１で算出した目標軌道に基づいて、目標舵角と目標車速を算出する（それぞれ、ステップ６０２とステップ６０３）。公知の走行制御装置では、これらのアクチュエータ群７０における制御目標値を算出して走行制御処理は終了するが、本実施形態では以降の走行制御の状態変化を判断するロジックを含むところに特徴を持つ。

[0071] ステップ６０４及びステップ６０５において、ステップ６０３で算出した目標車速が現在車速に対してα（変数）以上小さいか、あるいはα以上大きいかを判断する。目標車速が現在車速に対してα以上小さい場合（ステップ６０４でＹｅｓ）、車両２が減速していくことを意味しており、次の走行制御状態を「減速走行」に設定する（ステップ６０６）。これは、図２の状態遷移図における通常走行モード３０１の減速走行状態３１１に相当する。一方、目標車速が現在車速に対してα以上大きい場合（ステップ６０５でＹｅ

ｓ）、車両２が加速していくことを意味しており、次の走行制御状態を「加速走行」に設定する（ステップ６０７）。これは、図２の状態遷移図における通常走行モード３０１の加速走行状態３１２に相当する。目標車速が現在車速に対して±αの範囲に収まっている場合（ステップ６０５でＮｏ）、次の走行制御状態を「定常走行」に設定する（ステップ６０８）。なお、変数αは、一定値でも良いし、例えば現在車速が大きいほど大きいαの値を取るようにする等、現在車速の値に応じて変化させても良いし、道路属性や周辺の障害物、天候、視界状況等に応じて変化させても良い。

[0072] 次の走行制御状態が決定すると、走行制御決定部１０６は、ステップ６０９で現在の走行制御状態と比較し、走行制御状態が変化したかどうかを確認する。変化した場合は、走行制御要因特定部１０７が、走行制御状態変化の要因、すなわち、目標車速を決定した主要因を特定し、さらに外界認識情報データ群１２３を参照して主要要因となった対象物の情報を抽出する（ステップ６１０）。処理フロー６００には記載していないが、ステップ６０３において目標車速は、例えば、走行経路あるいは目標軌道中の障害物（例えば、他車両、歩行者、落下物等）や道路形状（例えば、カーブ、交差点、合流、分岐、幅員減少等）、交通規制（例えば、信号、制限速度等）に対して適切な車速を評価し、それらを統合することで算出される。その場合、目標車速を決定した主要因は、算出した目標車速と、個々の対象物に対して算出した結果を比較することで、抽出することが可能である。例えば、制限速度５０ｋｍ／ｈの走行経路上に他車両（先行車）と交差点の信号があったとする。他車両に対して算出した最適車速が５０ｋｍ／ｈ、交差点の信号に対して算出した最適車速が３０ｋｍ／ｈの場合、最も低い値の３０ｋｍ／ｈが目標車速となる。この場合、交差点の信号が目標車速を決定した主要因であるため、ステップ６１０では走行制御状態変化の要因として「信号」、対象物情報として該信号の情報が抽出されることになる。なお、処理フロー６００ではステップ６１０で走行制御状態変化の要因を改めて特定する流れで記載しているが、上述のように目標車速算出処理（ステップ６０３）で予め目標車

速を決定した主要因を抽出しておき、ステップ６１０ではそれを参照するようにすることで、処理を効率化しても良い。

[0073] 本実施形態では、通常走行モードの走行制御状態として加減速のみに着目して定義しているため、回転方向の変化については記載していない。しかし、本発明は加減速方向の状態変化に制限されることはなく、回転方向に関する走行制御状態を新たに定義し、目標車速と同様に回転方向の状態変化を確認する処理フローを含めても良い。

[0074] 以上に示したように、走行制御内容決定処理フロー６００は、目標制御値を算出すると共に、図２の状態遷移図で定義された走行制御状態の変化を検出する処理である。そのため、図７の例では、通常走行モード３０１における走行制御内容決定処理の一例を示したが、当然のことながら、異なる走行制御状態を内部に持つそれ以外の運転行動モードは、異なる走行制御内容決定処理フローになる。一方で、目標制御値を算出して、該運転行動モードにおける走行制御状態の変化を検出するという枠組みとしては変わらないため、他の運転行動モードにおける走行制御内容決定処理フローの記載は割愛する。

[0075] 図５の走行制御処理フロー４５０に戻る。走行制御内容決定処理（ステップ４５５）が終わると、走行制御情報出力部１１０は、ステップ４５５で算出した目標制御値を、通信部１３０から車両ネットワーク等を通じて、アクチュエータ群７０に対して送信する。その後、アクチュエータ群７０は、受信した目標制御値に従って適切に車両２の動作を制御することによって、車両２の走行制御を実現する。

[0076] 次に、ステップ４５７の走行制御情報出力処理に移る。図８を用いて走行制御情報出力処理フロー６５０の一例を説明する。

[0077] 走行制御情報出力処理では、車載用制御装置１０が保持する外界認識情報と制御イベント時の制御イベント情報と、２種類の情報を出力する。前者は、車載用表示装置２０等の装置が車外の状況を常時把握するための情報であり毎回送信されるのに対し、後者は、制御イベントの情報をユーザに通知す

るための情報であり、制御イベント発生時のみ送信される。

[0078] まず、車載用制御装置１０の外界認識情報出力部１１１は、ステップ６８１において、走行制御に関連する外界認識情報を外界認識情報データ群１２３から抽出する。走行制御に関連する外界認識情報とは、例えば、運転行動内容決定処理や走行制御内容決定処理で判断に用いた外界認識情報である。あるいは、車両２からの一定距離範囲内の認識されたオブジェクト情報としても良いし、車両２の走行経路に対して交錯する可能性のある認識されたオブジェクト情報としても良い。

[0079] 次に、外界認識情報出力部１１１は、ステップ６８１で抽出した関連外界認識情報に基づいて外界認識情報メッセージ６７１を生成し、生成したメッセージを通信部１３０から車載ネットワーク等に出力する（ステップ６８２）。

[0080] 図９は、本実施形態の車載用制御装置１０が送信する外界認識情報メッセージ６７１のフォーマット７２０の一例の説明図である。ただし、通信プロトコルに関するヘッダ情報等の図示は割愛した。

[0081] 外界認識情報メッセージ６７１は、送信しようとするオブジェクトの数を示すオブジェクト数７２１と、オブジェクト数分のＩＤ７２２、種別７２３、位置情報７２４、属性情報７２５、等を含む。上記の各種情報は、図示された制御イベントメッセージフォーマットのように１つのメッセージとして送信されても良いし、任意の複数個のメッセージに分割されて送信されても良い。

[0082] ＩＤ７２２は、認識された対象物を一意に特定するための識別子である。

[0083] 種別７２３は、対象物の種類を特定するための識別子であり、例えば、「車両」「歩行者」「信号」等である。

[0084] 位置情報７２４は、対象物の位置情報を示すデータが含まれる。位置情報とは、緯度・経度の情報でもよいし、車両２からの相対的な位置（例えば、対象物までの相対距離と相対方向）でもよいし、道路地図上の位置（例えば、リンクやノードのＩＤとその参照点に対する相対位置）でも良い。また、

位置情報７６３の中に、速度や移動方向等の情報を含めても良い。

[0085] 属性情報７２５は、各対象物特有の状態を表すデータ群である。例えば、対象物が「信号」の場合は、当該信号の現在の状態（赤、青、等）やその後の切替りタイミング（５秒後に青、等）、等が含まれる。

[0086] 車載用制御装置１０がステップ６８２で出力した外界認識情報メッセージ６７１は、例えば、車載ネットワークを通じて、車載用表示装置２０に伝達される。車載用表示装置２０の外界認識情報取得部２０６は、伝達された外界認識情報メッセージ６７１を受信し、外界認識情報メッセージフォーマット７２０に従ってメッセージを解析し、各種情報を取得する（ステップ６９１）。次に、外界認識情報取得部２０６は、取得した関連外界認識情報に基づき、外界認識情報データ群２２３を更新する（ステップ６９２）。

[0087] 以上により、一つ目の外界認識情報の出力処理が完了する。続いて、制御イベント情報の出力処理に移る。

[0088] 車載用制御装置１０の走行制御情報出力部１１０は、まず、ステップ６５１において走行制御処理フロー４５０の運転行動内容決定処理（ステップ４５４）と走行制御内容決定処理（ステップ４５５）で制御イベントが発生したかどうかを確認する。制御イベントとは、運転行動モードの変化か、あるいは、走行制御状態の変化が該当する。制御イベントが発生していない場合は（ステップ６５１でＮｏ）、何も処理せずに終了する。制御イベントが発生していた場合は（ステップ６５１でＹｅｓ）、違和感判定処理（ステップ６５３）に進む。

[0089] 図１０を用いて違和感判定処理フロー７００の一例を説明する。車載用制御装置１０の制御違和感判定部１０９は、まず、発生した制御イベント情報を取得する（ステップ７０１）。制御イベント情報は、具体的には、運転行動モードあるいは走行制御状態の状態遷移内容、該制御イベントが発生した際に抽出した制御イベントの要因、等を含む。

[0090] 次に、制御違和感パターンデータ群１２４の運転行動種別４０１、走行制御種別４０２、要因４０３を参照して、該制御イベントに関する該当エント

リがあるかを確認する（ステップ７０２）。該当エントリがある場合は（ステップ７０２でＹｅｓ）、対応する違和感レベル４０５の値を該制御イベントの違和感レベルとして設定する（ステップ７０３）。一方、該当するエントリがなかった場合は、違和感レベルとして０（違和感なし）を設定する。以上で違和感判定処理を終了する。

[0091] 図８の走行制御情報出力処理フロー６５０に戻る。次に、走行制御情報出力部１１０は、違和感判定処理（ステップ６５２）で特定した違和感レベルが所定の閾値以上かどうかを確認する（ステップ６５３）。違和感レベルが所定の閾値よりも下だった場合（ステップ６５３でＮｏ）、何もせずに終了する。違和感レベルが所定の閾値以上だった場合は（ステップ６５３でＹｅｓ）、当該制御イベント情報に基づいて制御イベントメッセージ６７０を生成し、生成したメッセージを通信部１３０から車載ネットワーク等に出力する（ステップ６５４）。

[0092] 違和感レベルに応じて制御イベント情報の出力要否を判断することによって、不要な情報を送信するのを抑制することができる。本実施形態では、後述のように、出力された制御イベント情報に基づいて、車載用表示装置２０を介して制御イベントの内容及びその要因を提示するが、不要な情報も含めて提示すると、運転者や乗員が煩わしく感じてしまう。そこで、違和感を与える可能性が高い制御イベントに絞って出力することによって、車載用表示装置２０における情報提示に対して運転者や乗員が感じる煩わしさを、低減することが可能となる。なお、ステップ６５３における違和感レベルの閾値としては、例えば「違和感レベルが２以上」等のように固定の閾値を設定しても良いし、状況に応じて動的に閾値を変更しても良い。あるいは、運転者等がＨＭＩ装置を通じて出力するか否かを調整できるように、閾値を変更することができるように構成してもよい。

[0093] 図１１は、本実施形態の車載用制御装置１０が送信する制御イベントメッセージ６７０のフォーマット７５０の一例の説明図である。ただし、通信プロトコルに関するヘッダ情報等の図示は割愛した。

[0094] 制御イベントメッセージ６７０は、制御イベント種別７５１、運転行動種別７５２、走行制御種別７５３、制御イベント要因７５４、制御イベント対象物ＩＤ７５５、違和感レベル７５６、等を含む。上記の各種情報は、図示された制御イベントメッセージフォーマットのように１つのメッセージとして送信されても良いし、任意の複数個のメッセージに分割されて送信されても良い。

[0095] 制御イベント種別７５１は、運転行動モードが変化したことによる制御イベントか、走行制御状態が変化したことによる制御イベントか、を識別するためのものであり、例えば、それぞれ「運転行動変化」「走行制御変化」と表現される。

[0096] 運転行動種別７５２は、制御イベント発生後の運転行動モードの種別である。制御イベント種別７５１が「運転行動変化」の場合は、運転行動種別７５２が当該制御イベントを発生させた運転行動モードを表すことになる。一方、制御イベント種別７５１が「走行制御変化」の場合は、単純に現時点の運転行動モードを表す。

[0097] 走行制御種別７５３は、制御イベント発生後の走行制御状態の種別である。制御イベント種別７５１が「走行制御変化」の場合は、走行制御種別７５３が当該制御イベントを発生させた走行制御状態を表すことになる。一方、制御イベント種別７５１が「運転行動変化」の場合は、単純に現時点の走行制御状態を表す。

[0098] 制御イベント要因７５４は、当該制御イベントを発生させた要因の情報が含まれる。図３の制御違和感パターンデータ群１２４における要因４０３に相当する値が入る。

[0099] 制御イベント要因対象物ＩＤ７５５は、制御イベントを発生させた要因に該当する対象物の識別子である。制御イベント要因対象物ＩＤ７５５は、外界認識情報メッセージ６７１に含まれるＩＤ７２２に対応するものであり、このＩＤ７５５から当該対象物の詳細情報（種別、位置情報、属性情報等）を参照できることを想定している。図１１の例では、要因対象物のＩＤのみ

を含める形で記載したが、その要因対象物に関連する詳細情報を含めてしまっても良い。なお、制御イベント要因対象物ＩＤ７５５は、複数の対象物のＩＤが含まれていても良い。その場合は、例えば、制御イベント要因対象物ＩＤ７５５の直前に含まれる対象物ＩＤの数の情報が格納され（非表示）、該当する対象物ＩＤが連続して配置される形になる。

[0100] 違和感レベル７５６は、違和感判定処理フロー７００で特定した当該制御イベントに対する違和感レベルを表す。

[0101] 図８の走行制御情報出力処理フロー６５０に戻る。車載用制御装置１０の走行制御情報出力部１１０は、ステップ６５４の処理を完了すると、車載用表示装置２０側の処理とは関係なく走行制御情報出力処理を終了し、図５の走行制御処理フロー４５０に戻る。

[0102] 図５の走行制御処理フロー４５０では、走行制御情報出力処理（ステップ４５７）が完了すると、再びステップ４５１に戻り同様の処理を繰り返すことになる。自車両や外界の状況を認識し（ステップ４５２、４５３）、その認識結果に基づいて運転行動や走行制御の内容を決定し（ステップ４５６）、決定した走行制御内容に基づいて目標制御値をアクチュエータ群７０に出力し、必要に応じて走行制御情報を車載用表示装置２０に通知する、という一連の処理を短い周期（例えば、５０ｍｓ）で繰り返していくことにより、走行制御システム１による車両２の走行制御が実現される。

[0103] 図８の走行制御情報出力処理フロー６５０に戻る。車載用制御装置１０がステップ６５４で出力された制御イベントメッセージ６７０は、例えば、車載ネットワークを通じて、車載用表示装置２０に伝達される。車載用表示装置２０の走行制御情報取得部２０４は、伝達された制御イベントメッセージ６７０を受信し、制御イベントメッセージフォーマット７５０に従ってメッセージを解析し、各種情報を取得する（ステップ６６１）。次に、車載用表示装置２０のＨＭＩ出力制御部２０５は、ＨＭＩ出力内容決定処理を行い、画面入出力部２４０や音声入出力部２５０に出力する内容を決定する（ステップ６６２）。

[0104] 図１２を用いて、ＨＭＩ出力内容決定処理の処理フロー８００の一例を説明する。まず、車載用表示装置２０のＨＭＩ出力制御部２０５は、受信した制御イベントの違和感レベルが音声出力すべきかどうかを判断する閾値以上であるかを確認する（ステップ８０１）。閾値未満であった場合は（ステップ８０１でＮｏ）、ステップ８０５に進み、次に違和感レベルが画面出力すべきかどうかを判断する閾値以上であるかを確認する。そして、画面出力閾値未満だった場合は（ステップ８０５でＮｏ）、ステップ８０９に進み、出力形式を「なし」に設定して、処理を終了する。画面出力閾値以上だった場合は、ステップ８０８に進み、出力形式を「表示のみ」に設定して、処理を終了する。

[0105] ステップ８０１に戻って、違和感レベルが音声出力閾値以上だった場合は、ステップ８０２に進み、制御イベント通知パターンデータ群２２２を参照して、当該制御イベントに関する音声通知設定４０４が「非通知」であるかどうかを確認する。「非通知」の場合は（ステップ８０２でＹｅｓ）、ユーザが音声通知をしない設定にしていることを意味するので、出力形式を「表示のみ」に設定して（ステップ８０８）、処理を終了する。「非通知」以外だった場合は（ステップ８０２でＮｏ）、同様に音声通知設定４０４が「通知」であるかどうかを確認し、もしも該当すれば（ステップ８０３でＹｅｓ）出力形式を「音声＋表示」に設定し（ステップ８０４）、処理を終了する。もしも非該当であれば（ステップ８０３でＮｏ）、制御イベント通知パターンデータ群２２２を参照して、当該制御イベントに関する通知回数４０５が所定の閾値Ｎを超えているかどうかを確認し（ステップ８０６）、超えていれば出力形式を「表示のみ」に設定し（ステップ８０８）、処理を終了する。一方、通知回数４０５が閾値を超えていなければ、当該通知回数４０５に１加算して（ステップ８０７）、出力形式を「音声＋表示」に設定し（ステップ８０４）、処理を終了する。

[0106] 本実施形態では、違和感レベルに応じて、制御イベント情報の音声出力及び画面出力を判断しており、特に音声出力は違和感レベルが高くないと（こ

の例では最高レベルの３）行われないようになっている。これは、音声出力をすると、ユーザに対して明示的な通知となるため、ユーザにとっての必要性によっては強い煩わしさを感じさせる原因となるためである。そのため、違和感レベルが低い制御イベント情報に関しては、音声を用いず、画面上にだけ表示させるようにしたり、あるいは何も出力しないようにしたりすることで、ユーザに与える煩わしさを軽減する。なお、車載用表示装置２０の画面入出力部２４０を通じて、制御違和感パターンデータ群１２４の違和感レベル４０５を変更することができるように構成してもよい。このような構成とすれば、乗員の慣れや感覚の差異に応じてあまり違和感を感じないパターンについては対応する違和感レベル４０５を下げる、といったカスタマイズ操作が可能となる。

[0107] また、ステップ８０６で当該制御イベントの通知回数に応じて、音声出力要否を判断しているが、これは、同様の通知を繰り返すことによりユーザが感じる煩わしさを軽減するためである。ユーザは幾度も同様な通知を受けると学習していくが、それにもかかわらず毎回音声通知を行うと、ユーザは煩わしさを感じるようになる。そこで、所定の回数の通知を超えたら音声通知を抑制することで、ユーザが感じる煩わしさを軽減する。なお、本実施形態においては、通知回数という指標を用いて過度な音声通知を抑制する方式を記載しているが、時間軸を考慮して通知頻度という指標を用いても良い（例えば、通知頻度が所定の閾値を超えたら音声通知しないようにする、等）。また、制御イベント通知パターンデータ群２２２の音声通知設定４０４の「通知」「非通知」が示すように、本実施形態における車載用表示装置２０は、画面入出力部２４０や音声入出力部２５０を介して、ユーザに設定させる機能も有する。車載用表示装置２０の設定画面によって明示的にユーザに設定させても良いし、ステップ８０７において当該制御イベントの通知回数が所定の値を超えた段階で、画面入出力部２４０または音声入出力部２５０を介して、ユーザに対して音声出力の要否を確認し、指定させるようにしても良い。また、ユーザが音声通知自体を抑止することができるように構成して

もよい。

[0108] 図８の走行制御情報出力処理フロー６５０に戻る。ステップ６６２のＨＭＩ出力内容決定処理が完了すると、その決定した出力形式に応じてＨＭＩ出力制御処理を実行する（ステップ６６３）。例えば、ステップ６６２で「音声＋表示」の出力形式が選択された場合は、画面入出力部２４０で制御イベント情報を表示すると共に、音声入出力部２５０で音声通知する。「表示のみ」が出力形式として選択された場合は、画面入出力部２４０で制御イベント情報を表示し、音声出力は実施しない。出力形式が「なし」の場合は、本処理では何もせずに終了する。具体的な制御イベント情報の提示方法については、具体例を用いて後述する。ＨＭＩ出力処理が完了すると、車載用表示装置２０における走行制御情報出力処理フローは終了する。

[0109] 具体的なシーンにおける走行制御システム１の動作を説明する。図１３は、信号交差点９３０に向かって道路９３１（制限速度４０ｋｍ／ｈ）を車両９０１が直進しているシーン（信号交差点シーン９００）を表している。４０ｋｍ／ｈで走行中の車両９０１の前方には、他車両９０２が４０ｋｍ／ｈで走行している。車両９０１の走行経路に対する交差点９３０の信号９１２の色は「青」であり、通過可能な状況である。その一方で、信号９１２は５秒後に赤になるような状況である（９１３）。車両９０１は交差点９３０と距離が離れており、信号９１２が赤になる前に交差点９３０を通過することはできないのに対し、車両９０２は交差点９３０に十分近いため通過できる想定であるものとする。信号交差点９３０の傍には、路車間通信用の路側機９１１が設置されており、路側機９１１は信号９１２と所定のネットワークにより接続されている。路側機９１１は、信号９１２から色の状態やこれ以降の信号の切り替えに関する信号情報を取得し、所定のメッセージフォーマットに従って、路車間通信で車両９０１等に前記信号情報を配信している。

[0110] このようなシーンにおいて、車両９０１を人が運転した場合、信号が青色の間は減速することなく、場合によっては加速しながら、交差点９３０に向かうと想定される。そして、信号９１２が黄色に変化した時点で、ブレーキ

を踏み急減速する。これは、人は信号９１２が今後どのように切り替わるかを認識できず、信号９１２のその時点の色の状態に基づいて、車両２の走行を制御するためである。

[0111] 一方、走行制御システム１は、路側機９１１から信号９１２の切替りの情報を取得することができ、５秒後に信号９１２が赤色になることを知っているので、車両９０１を信号９１２が青色の状態から減速させていき、急減速や不要な加速による燃料浪費を防ぐことができる。しかし、車両９０１の運転者あるいは乗員にとっては、認識できている情報は青信号であるため、車両９０１が減速することは不自然であり、違和感を受けてしまう可能性がある。そこで、本実施形態では、車載用表示装置２０を通じて減速の要因を運転者あるいは乗員に対して通知することで、違和感の軽減を図る。

[0112] 一連の処理の流れを図５の処理フローに沿って説明する。信号交差点シーン９００では、まず、ステップ４５３で取得される外界認識情報には、他車両９０２及び信号９１２の情報が含まれることになる。他車両９０２の情報は、ステレオカメラ等の外界センサ群５０の認識結果、あるいは無線通信部３０が車車間通信により取得したもの、あるいはそれらの統合結果である。信号９１２の情報は、無線通信部３０が路側機９１１から路車間通信により取得したものである。

[0113] 次に、ステップ４５４で運転行動内容を決定する。信号交差点シーン９００では、車両９００は交差点９３０をそのまま直進する想定なので、運転行動モードは通常走行モード３０１に該当し、図６の処理フローに従うと、ステップ５５１～５５７の条件に適合しないため、通常走行モードのまま特に変更はない（ステップ５８０）。

[0114] 続いて、走行制御内容決定処理（ステップ４５５）に移行する。通常走行モード３０１の走行制御内容決定処理にあたるので、図７の処理フローを通る。ステップ６０３で目標車速を算出する際に考慮することになるのは、走行道路の制限速度（４０ｋｍ／ｈ）、先行車９０２、信号９１２になる。それぞれ最適な車速を算出すると、制限速度に対しては上限の４０ｋｍ／ｈ、

先行車９０２に対してはお互い４０ｋｍ／ｈで走行しているため、４０ｋｍ／ｈ前後（車間距離に応じて変化）となる。それに対し、信号９１２は５秒後に赤になるため、当該交差点までの距離の関係で交差点９３０を通過できないことが導き出される。そのため、車載用制御装置１０の走行制御決定部１０６は、交差点９３０で停止させるような制御を実施することになり、最適な車速は４０ｋｍ／ｈよりもはるかに小さい値となる（例えば、２０ｋｍ／ｈ）。これらの算出結果を統合して目標車速を算出する場合、最も低い値が最終値となるため、目標車速＝２０ｋｍ／ｈとなり、ステップ６０４のαを５ｋｍ／ｈとすると、走行制御状態は「減速走行」という結果になる（ステップ６０６）。ステップ６０９において、それまで減速走行をしていなかったものとすると、ステップ６１０に進み、走行制御状態の変化要因としては「信号」、対象物としては信号９１２（ＩＤ＝９１２）が導出される。

[0115] 図５に戻り、ステップ４５６で目標制御値をアクチュエータ群７０に出力した後、図８の走行制御情報出力処理フロー６５０に移る。ステップ６５１は、走行制御状態が「減速走行」に変化したためＹｅｓとなり、違和感判定処理（ステップ６５２）を実行する。図１０の違和感判定処理フロー７００において、ステップ７０２で図３の制御違和感パターンデータ群１２４を参照すると９行目のエントリが該当するため、違和感レベルは３に設定される。次に、ステップ６５３における閾値＝２であるとすると、制御イベントの違和感レベル（＝３）≧閾値（＝２）となり、ステップ６５４に進み、制御イベントメッセージ６７０が出力される。

[0116] 出力される制御イベントメッセージ６７０に含まれるデータを説明する。制御イベント種別７５１には「走行制御変化」、運転行動種別７５２には「通常走行」、走行制御種別７５３には「減速走行」、制御イベント要因７５４には「信号」、違和感レベル７５６には「３」が設定される。制御イベント要因対象物情報７５５に関しては、ＩＤ７６１には「９１２」、種別７６２には「信号」、位置情報７６３には信号９１２が関係する交差点９３０を表す情報（例えば、ノードＩＤ等）が格納され、さらに、属性情報７６４に

は信号９１２の詳細情報が格納される。信号９１２の属性情報７６４は、例えば、信号９１２の種類（本シーンでは車両用信号）、状態（本シーンでは青色）や切替りタイミング（本シーンでは３秒後に黄色、５秒後に赤色、等）等の情報が含まれている。

[0117] 図８に戻り、車載用表示装置２０は、車載用制御装置１０が出力した制御イベントメッセージ６７０をステップ６６１で取得し、図１２のＨＭＩ出力内容決定処理６６２を実行する。図１２の処理フロー８００において、当該制御イベントの違和感レベルは３であるため、まず、ステップ８０１からステップ８０２に進む。ステップ８０２で図４の制御イベント通知パターンデータ群２２２を参照すると、該当する制御イベントが６行目に存在し、音声通知設定４０４が「通知」であるため、ステップ８０３を経由してステップ８０４に至り、出力形式が「音声＋表示」と決定される。そして、これらの決定内容に基づき、ＨＭＩ出力制御処理６６３において、画面入出力部２４０と音声入出力部２５０に対して、制御イベント情報を出力する。

[0118] 図１４を用いて、信号交差点シーン９００における車載用表示装置２０の画面表示の一例を示す。本実施形態では、画面入出力部２４０には、運転行動モード表示部１００１、制御イベント通知表示部１００２、ナビゲーション情報表示部１００３、走行軌道情報表示部１００４、等が含まれる。

[0119] 運転行動モード表示部１００１は、現時点の運転行動モードを示す表示部である。信号交差点シーン９００の運転行動モードは通常運転モードなので、「通常運転モード」と記載されている。表示方法については、運転行動内容がわかるように表現されていれば制限はなく、例えば、運転行動モードを模式的に表すようなアイコンで表現しても良い。

[0120] 制御イベント通知表示部１００２は、制御イベントの内容とその要因を通知する表示部である。例えば、「＜制御イベント要因＞のため＜制御イベント内容＞します」という形式のテキストである。信号交差点シーン９００での制御イベントでは、信号を要因とする減速走行制御であるため、「前方の信号通過不可のため減速します」と記載されている。この例では、＜制御イ

ベント要因＞に相当する部分が、単純に「信号」ではなく、「前方の信号通過不可」という言葉に置き換えられている。これは、ユーザにとってよりわかりやすく伝えることを意図しており、具体的には、制御イベント要因に対応する言葉のパターンを車載用表示装置２０で保持しておき、制御イベント通知表示部１００２で表示する際に変換することにより対応可能である。また、制御イベント通知表示部１００２の表現方法については、制御イベント内容とその要因が表現されていれば特に制限はなく、制御イベントの内容とその要因を表すようなアイコンで表現しても良い。なお、この表示部は制御イベントが発生したときにユーザに対して提示することを想定しているため、表示後一定時間経過したら表示を消しても良いし、次に走行制御の状態が変化するまで表示を継続しても良いし、また運転者がパネル操作等により消すことができるようにしても良い。。

[0121] ナビゲーション情報表示部１００３は、自車両９０１周辺の道路地図を表示し、車両２の地図上の位置（１０１１）や走行経路（１０１６）を示す表示部であり、一般的なナビゲーションシステムの表示画面に相当するものである。本実施形態では、道路地図上の走行経路を表示すると同時に、制御イベントが発生した場合は、当該制御イベントの要因となった対象物を地図上の該当位置に強調表示する。信号交差点シーン９００での制御イベント要因は、図１３における交差点９３０の信号９１２であるため、ナビゲーション情報表示部１００３の地図上でそれに該当する交差点１０１４の位置に信号９１２の状態（青色）を強調表示している（図１４の１０１２）。地図上で該当する位置に当該要因の対象物を強調表示することにより、自車位置１０１１との相対関係とから、ユーザは実世界上の当該信号の位置を容易に認識することが可能である。また、ここで減速走行の要因となる赤信号ではなく、敢えてその時点での状態である青信号として表示することにより、ユーザによる実世界上における要因対象物の認識を容易にしている。一方で、減速走行の要因は、交差点１０１４（図１３の交差点９３０）を通過前に赤信号に切り替わることである。それをユーザに認識させるため、信号１０１２の

属性情報として赤信号への切替りタイミングを１０１５のような形で提示している。赤信号の切替りタイミングを示すことで、ユーザは交差点１０１４との距離の関係から、当該交差点１０１４を通過できないことを即座に認識することができる。このように、要因の対象物の位置をユーザが視界上で認識できる形で地図上に強調表示すると共に、制御イベントの要因を示唆する属性情報を必要に応じて個別に提示することにより、ユーザは実世界上の対象物を容易に認識できると同時に、制御イベントの要因を容易に把握することが可能となる。

[0122] 走行軌道情報表示部１００４は、自車両近隣の外界認識情報を示すと共に、自車両の直近の走行軌道を示す表示部である。車両１０２１は自車両９０１を、車両１０２２は外界センサ群５０や無線通信部３０等により認識された他車両９０２を、それぞれ表している。矢印１０２３は車両１０２１の走行軌道を表している。信号交差点シーン９００では、自車両９０１は直進走行することになるので、走行軌道としては車線に沿った形になっている。

[0123] 以上の一連の処理により、信号交差点シーン９００において、走行制御システム１は、減速制御を実施する際に前方の交差点の信号を通過できないことが要因で減速することをユーザに対して通知することで、減速制御によってユーザが受ける違和感を軽減させることが可能となる。

[0124] 続いて、別の具体シーンにおける走行制御システム１の動作を説明する。図１５は、直進路１１１０（制限速度６０ｋｍ／ｈ）において、車両１１０１が前方の低速車両１１０２（３０ｋｍ／ｈ）を回避するため車線変更しようとしているシーン（車線変更シーン１１１０）を表している。追い越しレーンには、他車両１１０３及び他車両１１０４が走行しており、この時点では追い越しがかけられない状況である。

[0125] このようなシーンにおいて、車両１１０１を人が運転した場合、前方の低速車両の追い越しの意志を持ちながら追い越し車線へ車線変更可能になるまで待機し、他車両１１０３等が通過してそれが可能になったと判断した時点で車線変更するという流れになる。

[0126] 一方、自動運転システムの場合、人からするとどのような意志で運転されているのか見えない。そのため、人は前方の低速車両の存在を検知した時点で追い越しを意識するのに対し、自動運転システムでは車線変更の制御が実際に実行されるまで、人からはシステムが追い越しを意図していたことを認識できないことになる。つまり、自動運転システムが期待通りの運転行動を取るかどうかを認識できないので、運転者あるいは乗員が違和感を受けてしまう可能性がある。そこで、本実施形態では、車載用表示装置２０を通じて、走行制御システム１の車線変更の意志を運転者あるいは乗員に対して通知することで、違和感の軽減を図る。

[0127] 一連の処理の流れを図５の処理フローに沿って説明する。車線変更シーン１１００では、まず、ステップ４５３で取得される外界認識情報には、他車両１１０２～１１０４の情報が含まれることになる。他車両１１０２～１１０４の情報は、ステレオカメラ等の外界センサ群５０の認識結果、あるいは無線通信部３０が車車間通信により取得したもの、あるいはそれらの統合結果である。

[0128] 次に、ステップ４５４で運転行動内容を決定する。この時点での運転行動モードは同一車線上を走行する通常走行モードだったものとする。図６の処理フローに従うと、ステップ５５７の条件に適合するため、ステップ５６７に進み、運転行動モードを「車線変更」に変更し、運転行動決定要因を「前方低速車両」に設定する。また、次のステップ５７１では、対象物情報として、他車両１１０２の情報を抽出する。

[0129] 続いて、走行制御内容決定処理（ステップ４５５）に移行する。ステップ４５４で運転行動モードは「車線変更」と決定したため、車線変更モードの走行制御内容決定処理になる。車線変更モード３０４の走行制御種別としては、図２に示すように車線維持走行制御３４０と車線変更走行制御３４１が定義されている。処理フローとしては非記載であるが、変更先車線への進入に対する安全性が確認されるまでは現在の車線をそのまま走行する車線維持走行制御３４０に従い、安全性が確認された時点で走行制御状態を車線変更

走行制御に移行して、実際の車線変更の制御に移るという処理の流れになる。車線変更シーン１１００では、他車両１１０３の存在により追い越し車線への進入は危険であるため、車線維持走行制御３４０に従った目標軌道が算出され、舵角及び車速の制御目標値が算出される。なお、車線変更モード内の走行制御状態の変化は、変更先車線への進入可否判断によるものであり、走行制御システム１による車線変更の意志を認識していれば運転者や乗員から見ても明らかである。そのため、違和感を与えることはないため、通常走行モードのように走行制御状態変化要因やその対象物を特定しなくても良い。これは右折モード３０２、左折モード３０３、駐車モード３０５、等にも同様なことが言える。

[0130] 図５に戻り、ステップ４５６で目標制御値をアクチュエータ群７０に出力した後、図８の走行制御情報出力処理フロー６５０に移る。ステップ６５１は、運転行動モードが「通常走行モード」から「車線変更モード」に変化したためＹｅｓとなり、違和感判定処理（ステップ６５２）を実行する。図１０の違和感判定処理フロー７００において、ステップ７０２で図３の制御違和感パターンデータ群１２４を参照すると６行目のエントリが該当するため、違和感レベルは３に設定される。次に、ステップ６５３における閾値＝２であるとすると、制御イベントの違和感レベル（＝３）≧閾値（＝２）となり、ステップ６５４に進み、制御イベントメッセージ６７０が出力される。

[0131] 出力される制御イベントメッセージ６７０に含まれるデータを説明する。制御イベント種別７５１には「運転行動変化」、運転行動種別７５２には「車線変更」、走行制御種別７５３には「車線維持走行」、制御イベント要因７５４には「低速車両」、違和感レベル７５６には「３」が設定される。制御イベント要因対象物情報７５５に関しては、ＩＤ７６１には「１１０２」、種別７６２には「他車両」、位置情報７６３には他車両１１０２の位置情報（例えば、緯度、経度等）が格納され、さらに、属性情報７６４には他車両１１０２の詳細情報が格納される。他車両１１０２の属性情報７６４は、例えば、他車両１１０２の走行速度、等の情報が含まれている。

[0132] 図８に戻り、車載用表示装置２０は、車載用制御装置１０が出力した制御イベントメッセージ６７０をステップ６６１で取得し、図１２のＨＭＩ出力内容決定処理６６２を実行する。信号交差点シーン９００と同様、違和感レベルが３なので、出力形式は「音声＋表示」に決定される。そして、これらの決定内容に基づき、ＨＭＩ出力制御処理６６３において、画面入出力部２４０と音声入出力部２５０に対して、制御イベント情報を出力する。

[0133] 図１６を用いて、車線変更シーン１１００における車載用表示装置２０の画面表示の一例を示す。

[0134] 画面入出力部２４０の構成は、信号交差点シーン９００の際と同様で、運転行動モード表示部１１５１、制御イベント通知表示部１１５２、ナビゲーション情報表示部１１５３、走行軌道情報表示部１１５４、等が含まれる。

[0135] 車線変更シーン１１００の制御イベントにおける運転行動モードは車線変更モードであるため、運転行動モード表示部１１５１には「車線変更モード」と記載されている。また、＜制御イベント要因＞が「低速車両」であり、＜制御イベント内容＞が車線変更であるため、制御イベント通知表示部１１５２では「前方の低速車両回避のため車線変更検討中」と表現している。なお、「車線変更します」とせずに「車線変更検討中」としているのは、走行制御状態が「車線維持走行」であるため、まだ車線変更の制御に至っていないためである。当該制御イベントは運転行動内容の変化によるものであるため、走行制御内容の通知ではなく、走行制御システム１がどのような運転をするつもりかという意志を通知することが目的となる。もしも、車線変更モードの走行制御状態が「車線変更走行」に移行した場合は、制御イベント通知表示部１１５２は、例えば、「前方の低速車両回避のため車線変更します」のように、走行制御内容の通知に主体を置いて表現する。なお、図１６の制御イベント通知表示部１１５２の表示例のように、運転行動のモードは変化しているが、具体的にどのような走行制御を実行するか検討中（演算中）である場合には、当該表示部の表示をフラッシュさせるなど、種々の表示態様を採用することができる。

[0136] 走行軌道情報表示部１１５４には、信号交差点シーン９００の場合と同様、自車両近隣の外界認識情報と共に、自車両の直近の走行軌道が示されている。車両１１７１は自車両１１０１を、車両１１７２～１１７４はそれぞれ外界センサ群５０や無線通信部３０等により認識された他車両１１０２～１１０４を表している。

[0137] まず、特徴的なのは、当該制御イベントの要因である低速車両１１０２に該当する車両１１７２を破線１１８２で囲んで強調表示している点である。信号交差点シーン９００では、ナビゲーション情報表示部側で制御イベント要因を強調表示したが、ユーザに低速車両１１０２を実世界上で容易に認識させるためには車線レベルでの粒度で位置関係を表示する必要となるため、走行軌道情報表示部１１５４側で強調表示する方が望ましい。なお、ナビゲーション情報表示部１１５３と走行軌道情報表示部１１５４の両側で強調表示する形でも良い。また、図１６で示した強調表示方法は飽くまで一例であり、どのような強調表示方法でも良く、例えば、該当車両の色を変えても良いし、点滅させても良いし、拡大表示しても良い。

[0138] もう一つ特徴として挙げられるのは、車両１１７１の走行軌道１１８０を示すと共に、検討中の車線変更の走行軌道１１８１を点線表示している点である。これは、走行制御システム１が車線変更の意志を持っていることを視覚的に伝達すると同時に、両側に車線変更が可能な状況において意図した車線変更先を示す意味を持つ。点線表示にしているのは、この時点でまだ車線変更を検討している段階であり、実際の走行制御に至っていないためである。もしも、車線変更モードの走行制御状態が「車線変更走行」に移行した場合は、現在の走行軌道１１８０は消え、車線変更の走行軌道１１８１が実線表示されることになる。

[0139] 以上の一連の処理により、車線変更シーン１１００において、走行制御システム１は、実際の車線変更の制御に移る前であっても、車線変更の意志を伴った時点でユーザに対して要因（低速車両）と共にその意志を通知することにより、低速車両回避を期待するユーザに安心感を与えることが可能とな

る。

[0140] 以上のように，本実施形態によれば、車両２の車載用制御装置１０は、運転行動内容が変化する際にその決定要因とその対象物を特定しそれらの情報を外部に出力する。そして、車載用表示装置２０がそれらの出力情報に基づいて、走行制御システム１の運転行動内容をその要因と共にユーザに提示する。これにより、ユーザは走行制御システム１がどのような理由によりどのような運転をするつもり、あるいは運転しているのかを把握できるようになり、自動運転による車両２の動作を予測できないことにより感じるユーザの不安を軽減することが可能となる。

[0141] また、本実施形態によれば、車両２の車載用制御装置１０は、走行制御内容が変化する際にその決定要因とその対象物を特定しそれらの情報を外部に出力する。そして、車載用表示装置２０がそれらの出力情報に基づいて、走行制御システム１の走行制御内容をその要因と共にユーザに提示する。これにより、ユーザは走行制御システム１がどのような理由によりどのような制御を実施するつもり、あるいは実施しているのかを把握できるようになり、走行制御の理由を咄嗟に認識できないことにより感じるユーザの違和感を軽減することが可能となる。

[0142] また、本実施形態によれば、車両２の車載用制御装置１０は、運転行動内容や走行制御内容の変化とその要因の組合せに対してユーザが違和感を受けるかどうかを評価し、その度合いに応じて外部に出力するかどうかを判断している。これにより、情報として通知する価値のないものを除外し、過度な通知によりユーザが感じる煩わしさを軽減することができる。同様に、車両２の車載用表示装置２０は、違和感の度合いに応じて、画面表示のみで通知するか、音声も一緒に通知するかを判断している。これも、情報の重要度に応じてユーザに喚起するレベルを調整していることを意味しており、過度な通知によりユーザが感じる煩わしさの軽減の効果を持つ。

[0143] 第２実施形態

第１実施形態では、運転行動や走行制御の変化に対して感じる違和感のレ

ベルを判定するために、車載用制御装置１０が違和感を与える可能性のある制御イベントとその要因の組合せパターンを示す制御違和感パターンデータ群１２４を保持するようにした。第２実施形態では、異なる方式で制御違和感を判定する一例を説明する。

[0144] 図１７に違和感判定処理フロー１２００を示す。これは、第２実施形態における図８のステップ６５２の違和感判定処理に該当する。

[0145] 車載用制御装置１０は、制御イベント情報を取得後（ステップ１２０１）、当該制御イベントが運転行動変化によるものかどうかを確認する（ステップ１２０２）。運転行動変化によるものだった場合は、違和感レベルを３（最大値）に設定し（ステップ１２０６）、処理を終了する。これは、運転行動変化に関する制御イベントは、必ず外部に出力するように設定することを意味する。

[0146] 一方で、運転行動変化によるものではない、すなわち走行制御変化によるものだった場合は（ステップ１２０２でＮｏ）、まず、ステップ１２０１で取得した制御イベント情報から、要因対象物の情報源を特定する（ステップ１２０３）。ここで情報源とは、要因対象物をどのような手段で認識しているかを意味しており、例えば、外界センサ群５０に含まれるカメラやレーダ、無線通信部３０による無線通信、等が該当する。また、要因対象物自体の情報源が複数存在する場合でも、制御イベントの決定の際に用いた情報を取得できない情報源は除外するものとする。例えば、第１実施形態の信号交差点シーン９００において、信号の状態は無線通信以外にもカメラにより認識可能であるが、制御イベント決定に用いた情報は信号の切替りタイミングの情報であり、それはカメラから認識することができない。その場合、情報源としては、無線通信のみが該当することになる。

[0147] 人は車外状況を実際に目で見ることによって認識し、その認識に基づいて車両の運転行動を判断する。それに対し、走行制御システム１では人が認識できない情報も取得することができる。人が認識できる情報に基づいて運転行動内容や走行制御内容が決定された場合は、人がその内容に関して違和感

を受けることは少ない。他方で、人が認識できない情報に基づいて運転行動内容や走行制御内容は、違和感を与える可能性が高い。そこで、要因対象物の情報源の種別とその他特有条件に応じて、ユーザが認識可能な情報かどうかを判断して、違和感レベルを特定するようにする。具体的には、ステップ１２０４で、第１実施形態の制御違和感パターンデータ群１２４に代わり、図１８に示す制御違和感パターンデータ群１３００を参照して違和感レベルを特定する。

[0148] 制御違和感パターンデータ群１３００は、要因対象物の情報源や特有条件に対して与える違和感の度合を示すデータの集合体である。情報源種別１３０１は、要因対象物の認識手段を表す。特有条件１３０２は、情報源種別１３０１において違和感レベル１３０３を変化させるような環境条件を表す。違和感レベル１３０３は、該当する情報源種別１３０１と特有条件１３０２の組合せ時に与える可能性のある違和感の度合を表す。例えば、可視光カメラは、人の車外状況の認識手段とほぼ同等であるため、違和感レベルを０に設定している。例えば、ミリ波レーダは、遠方の障害物も検知できる特徴を持つ。遠方になると人の視力では認知できなくなってくるため、対象物の距離に応じて違和感レベルを変えて設定している。また、例えば、赤外線カメラは、夜間でも障害物を検知できる特徴を持つ。しかし、人の視力では暗闇の中では対象物を認識できないため、夜間とそれ以外で違和感レベルを変えて設定している。あるいは、車外の明るさを認識する手段を持ち（例えば、照度センサ）、そのレベルに応じて違和感レベルを変更しても良い。なお、図１８は飽くまで一例であり、任意の情報源種別に対して、相対距離、車外の明るさ、天候、視界の悪さ、等の任意の条件を設定して良い。また、車両における外界センサの設置方法に応じて、区別して違和感レベルを調整しても良い。例えば、前方カメラと後方カメラを別の情報源種別としても良い。

[0149] 要因対象物は、複数の情報源により認識されていることもある。その場合は、ステップ１２０３において、それぞれの情報源に対して、制御違和感パターンデータ群１３００を参照して、該当する違和感レベルを特定する。例

えば、１００ｍ先の前方車両が要因対象物だったとして、可視光カメラとミリ波レーダで該前方車両を検知していた場合、可視光カメラの違和感レベルが０（１行目）、ミリ波レーダの違和感レベルが２（３行目）としてそれぞれ特定される。

[0150] そして次のステップ１２０５で、特定した１つ以上の違和感レベルに対して最小値を選択し、当該制御イベントの違和感レベルに設定し、本処理を終了する。

[0151] 以上のように，本実施形態によれば、車両２の車載用制御装置１０は、走行制御内容の決定要因となった対象物がどのような手段で認識されたかによって、ユーザが違和感を受けるかどうかを評価し、その度合いに応じて外部に出力するかどうかを判断している。これにより、人が認識できない情報に基づいて実施された制御内容に絞って通知することが可能となり、過度な通知によりユーザが感じる煩わしさを軽減することができる。

[0152] 第３実施形態

第１実施形態及び第２実施形態では、運転行動や走行制御の変化を契機に、その内容と要因を通知する方式の例を説明した。一方で、運転行動や走行制御の変化を伴わない場合であっても、ユーザが違和感を受ける場合がある。本実施形態では、運転行動や走行制御の変化の有無に関係なく、ユーザに違和感を与える可能性のある状況を検出し、ユーザに通知する手段の一例を説明する。

[0153] 本実施形態では、走行制御内容決定処理において、目標舵角や目標車速を算出する際（図７のステップ６０２及びステップ６０３に該当）に、該算出結果に対してユーザが違和感を受けないかどうかを確認する処理を行う。

[0154] 目標車速算出処理を例に説明する。第１実施形態で述べたように、目標車速は、走行経路あるいは目標軌道中の障害物（例えば、他車両、歩行者、落下物等）や道路形状（例えば、カーブ、交差点、合流、分岐、幅員減少等）、交通規制（例えば、信号、制限速度等）に対して適切な車速をそれぞれ評価し、それらを統合することで算出される。本実施形態では、第１実施形態

のようにすべての外界認識情報を用いて算出した最適な目標車速と、ユーザが認識できない外界認識情報を除いて算出した目標車速の２種類を算出するようにする。そして、算出した２種類の目標車速を比較し、有意な差異がある場合はユーザに違和感を与える可能性が高いと判断する。これは、２種類の目標車速の算出結果に差があるということは、走行制御システム１の制御内容（前者の目標車速に該当）が、ユーザが車外状況を認識して運転する場合（後者の目標車速）とで差異があることを意味するためである。なお、ユーザが認識できない外界認識情報とは、例えば、無線通信でしか得られない信号の切替りタイミングや死角の交通状況（カーブ先の渋滞等）、等が挙げられる。ユーザが認識できない外界認識情報の識別は、予め該当する情報の種別（信号の切替りタイミング等）のリストを保持しておき照合することによって判断しても良いし、第２実施形態で導入した制御違和感パターンデータ群１３００のように情報源種別と特有条件によって判断しても良い。

[0155] もしも、上記のように走行制御内容がユーザに違和感を与える可能性が高いと判断したら、たとえ走行制御状態に変化がなかったとしても、制御イベント情報として車載用表示装置２０に出力するようにする。車載用表示装置２０は、該情報を受信すると、第１実施形態と同様な方式に従い、必要に応じて画面表示や音声出力によりユーザに通知する。

[0156] 以下、具体的なシーンで説明する。図１９は、信号交差点シーン９００において信号９１２の色の切替りを青→赤から赤→青に入れ替えたシーン（信号交差点シーン１４００）である。すなわち、信号１４１２の色はこの時点で「赤」であり、通過不可な状況である。その一方で、信号１４１２は５秒後に青に切り替わるようになっており、その情報は路側機９１１を通じて路車間通信で自車両９０１に通知されている。また、信号１４１２が赤の状態なので、それに合わせて他車両９０２の速度を１０ｋｍ／ｈ、自車両９０１の速度を３０ｋｍ／ｈと設定している。

[0157] この信号交差点シーン１４００において、目標車速を算出する際に考慮することになるのは、走行道路の制限速度（４０ｋｍ／ｈ）、先行車９０２、

信号１４１２になる。それぞれ最適な車速を算出すると、制限速度に対しては上限の４０ｋｍ／ｈである。先行車９０２は１０ｋｍ／ｈで走行しているが、車間距離が十分にあると仮定し、３０ｋｍ／ｈ前後と算出されるものとする。信号１４１２はこの時点で赤であるが、５秒後に青になるため、現在の速度で交差点９３０に向かえばそのまま通過可能であることが導き出され、最適な車速は３０ｋｍ／ｈとなる。これらの算出結果を統合して目標車速を算出すると、最も低い値が最終値となるため、目標車速＝３０ｋｍ／ｈとなる。これが、最適な目標車速である。一方で、ユーザが認識できない外界認識情報を除いて考えると、信号の切替りタイミングに関する情報は使えないため、信号１４１２は、例えばカメラ等で認識された信号の色の情報のみとなる。その場合、信号１４１２は赤信号であるため、交差点９３０前で停止すべきと判断し、最適な車速は３０ｋｍ／ｈよりもはるかに小さい値（例えば、１５ｋｍ／ｈ）となる。ここで、２つの目標車速の算出結果を比較すると、大きな差が出ていることがわかる。つまり、走行制御システム１の制御内容が、ユーザが車外状況を認識して運転する場合と異なり、ユーザに違和感を与える可能性が高いことを意味する。与える違和感の度合は、例えば、２つの目標車速の差異の程度に応じて設定される。この例では、違和感レベルは「３」に設定されたものとする。

[0158] そのため、車載用制御装置１０は、車載用表示装置２０に対して本関連の情報を出力する。具体的には、例えば、制御イベントメッセージフォーマット７５０に従い、制御イベント種別７５１は「走行制御変化」（但し、実際には変化がないため別の種別を定義してもよい）、運転行動種別７５２は「通常走行モード」、走行制御種別７５３は「定常走行」、制御イベント要因７５４は「信号」、違和感レベル７５６には「３」が設定される。制御イベント要因対象物情報７５５に関しては、ＩＤ７６１には「１４１２」、種別７６２には「信号」、位置情報７６３には信号１４１２が関係する交差点９３０を表す情報（例えば、ノードＩＤ等）が格納され、さらに、属性情報７６４には信号１４１２の詳細情報が格納される。信号１４１２の属性情報７

６４は、例えば、信号９１２の種類（本シーンでは車両用信号）、状態（本シーンでは赤色）や切替りタイミング（本シーンでは５秒後に青色、等）等の情報が含まれている。

[0159] 図２０に信号交差点シーン１４００における車載用表示装置２０の画面表示の一例を示す。画面構成及び表示内容は、信号交差点シーン９００の画面表示例の図１４とほぼ同様である。内容が大きく変化したのは制御イベント通知表示部１５０２であり、＜制御イベント要因＞が「信号」、＜制御イベント内容＞が「定常走行」に該当することから、「前方の信号通過可能のため通常走行します」と表現している。

[0160] 以上のように，本実施形態によれば、車両２の車載用制御装置１０は、目標舵角や目標車速を算出する際に、外界認識情報全てを用いた算出結果と、ユーザが認識可能と推測される情報のみを用いた算出結果を比較することで、ユーザが制御内容に対して違和感を受けるかを判断している。この違和感判定は、制御内容を決定する毎回の処理ループの中で実施されるため、制御内容の変化に関係なく、ユーザに違和感を与える可能性のある制御状態を検出できる効果を持つ。また、実際の外界認識情報に基づいて判断するため、障害物や天候等により視界が遮られる等の環境変化による影響にも対応することができる。

[0161] なお、以上で説明した実施形態は一例であり、本発明はこれに限られない。すなわち、様々な応用が可能であり、あらゆる実施の形態が本発明の範囲に含まれる。

[0162] 例えば、上記実施形態では、車載用制御装置や車載用表示装置の各処理を、プロセッサとＲＡＭを用いて、所定の動作プログラムを実行することで実現しているが、必要に応じて独自のハードウェアで実現することも可能である。また、上記の実施形態では、車載用制御装置、車載用表示装置、無線通信部、自車位置測位装置、外界センサ群、車両センサ群、アクチュエータ群を個別の装置として記載しているが、必要に応じて任意のいずれか２つ以上を組合せて実現することも可能である。

[0163] 上記の各処理が、プロセッサが所定の動作プログラムを実行することで実現される場合、各処理を実現する動作プログラム、テーブル、ファイル等の情報は、不揮発性半導体メモリ、ハードディスクドライブ、ＳＳＤ（Solid State Drive）等の記憶デバイス、または、ＩＣカード、ＳＤカード、ＤＶＤ等の計算機読み取り可能な非一時的データ記憶媒体に格納することができる。

[0164] また、図面には、実施形態を説明するために必要と考えられる制御線及び情報線を示しており、必ずしも、本発明が適用された実際の製品に含まれる全ての制御線及び情報線を示しているとは限らない。実際にはほとんど全ての構成が相互に接続されていると考えてもよい。

符号の説明

[0165] １：走行制御システム

２：車両

１０：車載用制御装置

２０：車載用表示装置

３０：無線通信部

４０：自車位置測位装置

５０：外界センサ群

６０：車両センサ群

７０：アクチュエータ群

１００：車載用制御装置１０のＣＰＵ

１０１：関連情報取得部

１０２：外界認識情報統合部

１０３：地図位置推定部

１０４：運転行動決定部

１０５：運転行動要因特定部

１０６：走行制御決定部

１０７：走行制御要因特定部

１０８：要因対象物情報抽出部

１０９：制御違和感判定部

１１０：走行制御情報出力部

１１１：外界認識情報出力部

１２０：車載用制御装置１０の記憶部

１２１：周辺道路地図データ群

１２２：自車情報データ群

１２３：外界認識情報データ群

１２４：制御違和感パターンデータ群

１３０：車載用制御装置１０の通信部

２００：車載用表示装置２０のＣＰＵ

２０１：走行経路決定部

２０２：周辺地図情報送信部

２０３：走行経路情報送信部

２０４：走行制御情報取得部

２０５：走行制御情報出力部

２０６：外界認識情報取得部

２２０：車載用表示装置２０の記憶部

２２１：道路地図データ群

２２２：制御イベント通知パターンデータ群

２２３：外界認識情報データ群

２３０：車載用表示装置２０の通信部

２４０：車載用表示装置２０の画面入出力部

２５０：車載用表示装置２０の音声入出力部

請求の範囲

[請求項1] 車両に搭載され、前記車両の走行を制御するための走行制御装置であって、

進路上の障害物及び他車両を含む自車両外部の対象物を捉える外界センサから受信することにより、又は路側からの情報を車外通信により受信することにより外界認識情報を取得するための外界認識情報取得部と、

前記外界認識情報取得部から受信する前記外界認識情報と、自車両の位置、及び走行速度を含む情報である自車両情報とに基づいて、当該自車両が取るべき運転行動内容を決定するための運転行動決定部と、

前記運転行動決定部から受信する、前記運転行動内容を決定する理由になった運転行動要因を特定するための運転行動要因特定部と、

前記運転行動内容と、当該運転行動内容について特定した運転行動要因とを出力するための運転行動情報出力部と、

を備える走行制御装置。

[請求項2] 請求項１に記載の走行制御装置であって、

前記運転行動要因と関連付けられている前記外界認識情報から、当該外界認識情報に含まれる、前記運転行動要因となった対象物である要因対象物に関する情報を抽出する運転行動要因対象物情報抽出部を備え、

前記運転行動情報出力部は、前記要因対象物に関する情報を含めて出力する

走行制御装置。

[請求項3] 請求項１又は２に記載の走行制御装置であって、

前記運転行動決定部において決定した運転行動に基づいて当該車両の走行制御内容を決定するための走行制御内容決定部と、

前記走行制御内容を決定する理由になった走行制御要因を特定する

ための走行制御要因特定部と、

前記走行制御内容と前記特定した走行制御要因とを出力する走行制御情報出力部と、

を備える走行制御装置。

［請求項4］ 請求項３に記載の走行制御装置であって、

前記走行制御要因と関連付けられている前記外界認識情報から、当該外界認識情報に含まれる、前記走行制御要因となった対象物である要因対象物に関する情報を抽出する走行制御要因対象物情報抽出部を備え、

前記走行制御情報出力部は、さらに前記走行制御要因対象物に関する情報を含めて出力する走行制御装置。

［請求項5］ 請求項３又は４に記載の走行制御装置であって、

前記走行制御内容と前記走行制御要因との組合せ、又は前記運転行動と前記走行制御要因との組合せについて、該走行制御が前記車両の乗員に対して違和感を与えるかどうかを判定するための走行制御違和感判定部を、

備える走行制御装置。

［請求項6］ 請求項５に記載の走行制御装置であって、

前記車両の乗員に対して違和感を与える可能性のある走行制御内容と走行制御要因との組合せ情報を記録した制御違和感パターン情報を備え、

前記走行制御違和感判定部は、前記制御違和感パターン情報を参照して、該走行制御が前記車両の乗員に対して違和感を与えるかどうかを判定する

走行制御装置。

［請求項7］ 請求項５に記載の走行制御装置であって、

前記走行制御違和感判定部は、前記走行制御内容の変化を検出した場合、当該走行制御内容の変化要因である走行制御要因に関連付けら

れている外界認識情報の取得源種別に応じて走行制御違和感を判定する、走行制御装置。

[請求項8] 請求項５に記載の走行制御装置であって、

前記走行制御違和感判定部は、前記走行制御内容の変化を検出していない場合に、乗員に違和感を与える可能性があるとして選択された前記外界認識情報の変化に応じて走行制御違和感を判定する、走行制御装置。

[請求項9] 請求項５に記載の走行制御装置であって、

前記走行制御内容と前記走行制御要因との組合せについて、乗員に与えうる違和感を指標とした違和感指標を関連付けて保持しており、前記違和感指標に当該違和感に基づく情報を出力するか否かの基準値である出力判定閾値が設定されており、前記走行制御違和感判定部は、前記違和感指標が前記閾値を超えたと判定した場合、前記走行制御情報出力部に前記走行制御内容と前記特定した走行制御要因とを出力させる、

走行制御装置。

[請求項10] 車両に搭載され、当該車両の乗員に情報を提示するための車載用表示装置であって、

当該車両の走行制御内容を決定する、当該車両の運転行動を示す情報であり、選択されている運転行動の種類とその運転行動を選択した要因の情報を含む運転行動情報を取得する運転行動情報取得部と、

前記運転行動情報を表示するための表示部と、前記運転行動情報の内容を音声出力する音声出力部との少なくともいずれかを有し、前記運転行動情報に含まれる運転行動の種類を運転行動要因と併せて提示する運転行動情報出力部と、

を備える車載用表示装置。

[請求項11] 請求項１０に記載の車載用表示装置であって、

前記運転行動情報は、前記運転行動要因と関連付けられている対象

物に関する運転行動要因対象物情報を含み、

前記運転行動情報出力部は、前記運転行動要因に関連付けられている対象物に関する情報を併せて出力する

車載用表示装置。

[請求項12] 請求項１０に記載の車載用表示装置であって、

前記運転行動情報に関する運転行動に基づいて決定される走行制御内容を示す情報である走行制御情報と、当該走行制御情報の要因である走行制御要因とが関連付けられており、

前記運転行動情報出力部は、前記走行制御要因に関する情報を併せて出力する、

車載用表示装置。

[請求項13] 請求項１２に記載の車載用表示装置であって、

前記走行制御要因には、当該走行制御の要因となった対象物に関する情報が関連付けられており、

前記運転行動情報出力部は、前記走行制御要因に関する対象物の情報を併せて出力する、

車載用表示装置。

[請求項14] 請求項１０に記載の車載用表示装置であって、

前記運転行動情報出力部は、前記運転行動情報の出力回数が所定数を超えたと判定した場合に、当該運転行動情報の出力を抑止する、

車載用表示装置。

[請求項15] 車両に搭載され、前記車両の走行を制御するための走行制御システムであって、

進路上の障害物及び他車両を含む自車両外部のオブジェクトを捉える外界センサから受信し、又は路側からの進路上進行可否、進行速度制限に関する情報を含む情報を車外通信により受信することによりこれらを含む外界認識情報を取得するための外界認識情報取得部と、

前記外界認識情報取得部から受信する前記外界認識情報と、自車両

の位置、及び走行速度を含む情報である自車両情報とに基づいて、当該自車両が取るべき運転行動内容を決定するための運転行動決定部と、

前記運転行動決定部から受信する、前記運転行動内容を決定する理由になった運転行動要因を特定するための運転行動要因特定部と、

当該車両の走行制御内容を決定する、当該車両の運転行動を示す情報であり、選択されている運転行動の種類とその運転行動を選択した要因の情報を含む前記運転行動情報を取得する運転行動情報取得部と、

前記運転行動情報を表示するための表示部と、前記運転行動情報の内容を音声出力する音声出力部との少なくともいずれかを有し、前記運転行動情報に含まれる運転行動の種類を運転行動要因と併せて提示する運転行動情報出力部と、

を備える走行制御システム。

[図1]

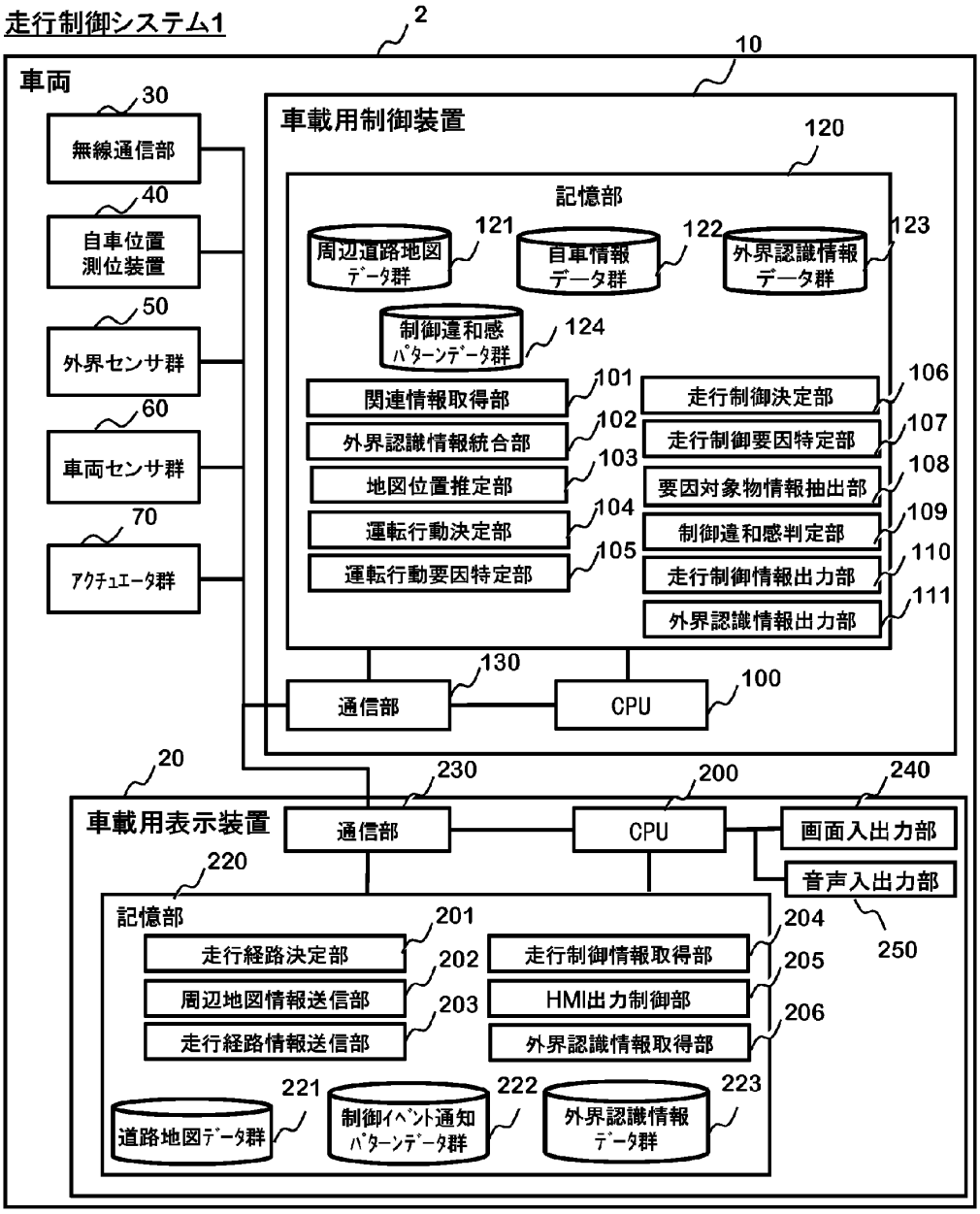
走行制御システム1
2
車両
10
30
無線通信部
40
自車位置
測位装置
50
外界センサ群
60
車両センサ群
70
アクチュエータ群
車載用制御装置
120
記憶部
121
周辺道路地図
データ群
122
自車情報
データ群
123
外界認識情報
データ群
124
制御違和感
パターンデータ群
101
関連情報取得部
102
外界認識情報統合部
103
地図位置推定部
104
運転行動決定部
105
運転行動要因特定部
106
走行制御決定部
107
走行制御要因特定部
108
要因対象物情報抽出部
109
制御違和感判定部
110
走行制御情報出力部
111
外界認識情報出力部
130
通信部
100
CPU
20
車載用表示装置
230
通信部
200
CPU
240
画面入出力部
音声入出力部
250
220
記憶部
201
走行経路決定部
202
周辺地図情報送信部
203
走行経路情報送信部
204
走行制御情報取得部
205
HMI出力制御部
206
外界認識情報取得部
221
道路地図データ群
222
制御イベント通知
パターンデータ群
223
外界認識情報
データ群

[図2]

走行制御の状態遷移図300

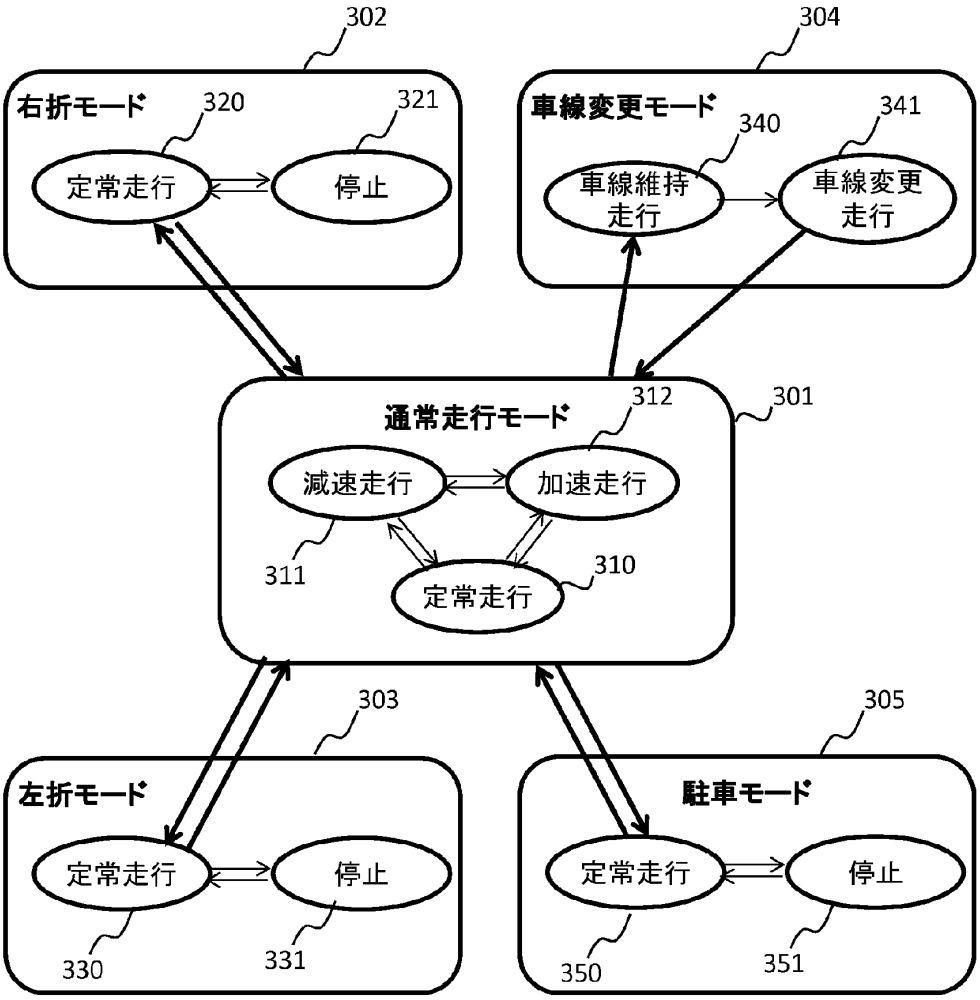

[図3]

制御違和感パターンデータ群124

#	401 運転行動種別	402 走行制御種別	403 要因	404 特有条件	405 違和感レベル
1	左折	Any	設定経路	-	3
2	右折	Any	設定経路	-	3
3	駐車	Any	設定経路	-	3
4	駐車	Any	ユーザ指定	-	2
5	車線変更	Any	停止車両	-	3
6	車線変更	Any	低速車両	-	3
7	通常走行	減速	先行車	-	1
8	通常走行	減速	カーブ	-	1
9	通常走行	減速	信号	信号状態≠赤	3
10	通常走行	減速	速度制限	-	2
11	通常走行	減速	渋滞	-	3
12	車線変更	車線変更	Any	-	2
13	左折	停止	先行車	-	0
14	左折	停止	横断者	-	2
…	…	…	…	…	…

[図4]

制御イベント通知パターンデータ群222

#	運転行動種別 (411)	走行制御種別 (412)	要因 (413)	音声通知設定 (414)	通知回数 (415)
1	左折	Any	設定経路	通知	-
2	右折	Any	設定経路	通知	-
3	駐車	Any	設定経路	通知	-
4	車線変更	Any	停止車両	非通知	-
5	車線変更	Any	低速車両	未指定	10
6	通常走行	減速	信号	通知	-
7	通常走行	減速	渋滞	未指定	8
…	…	…	…	…	

［図5］

走行制御処理フロー450

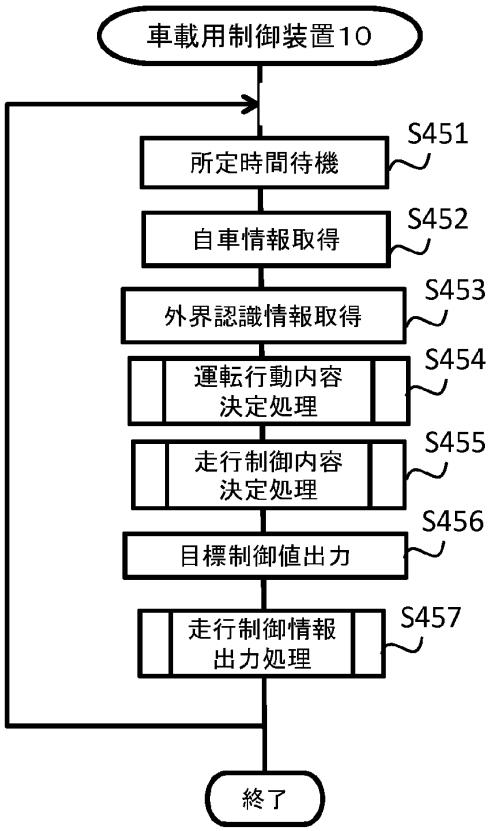

[図6]

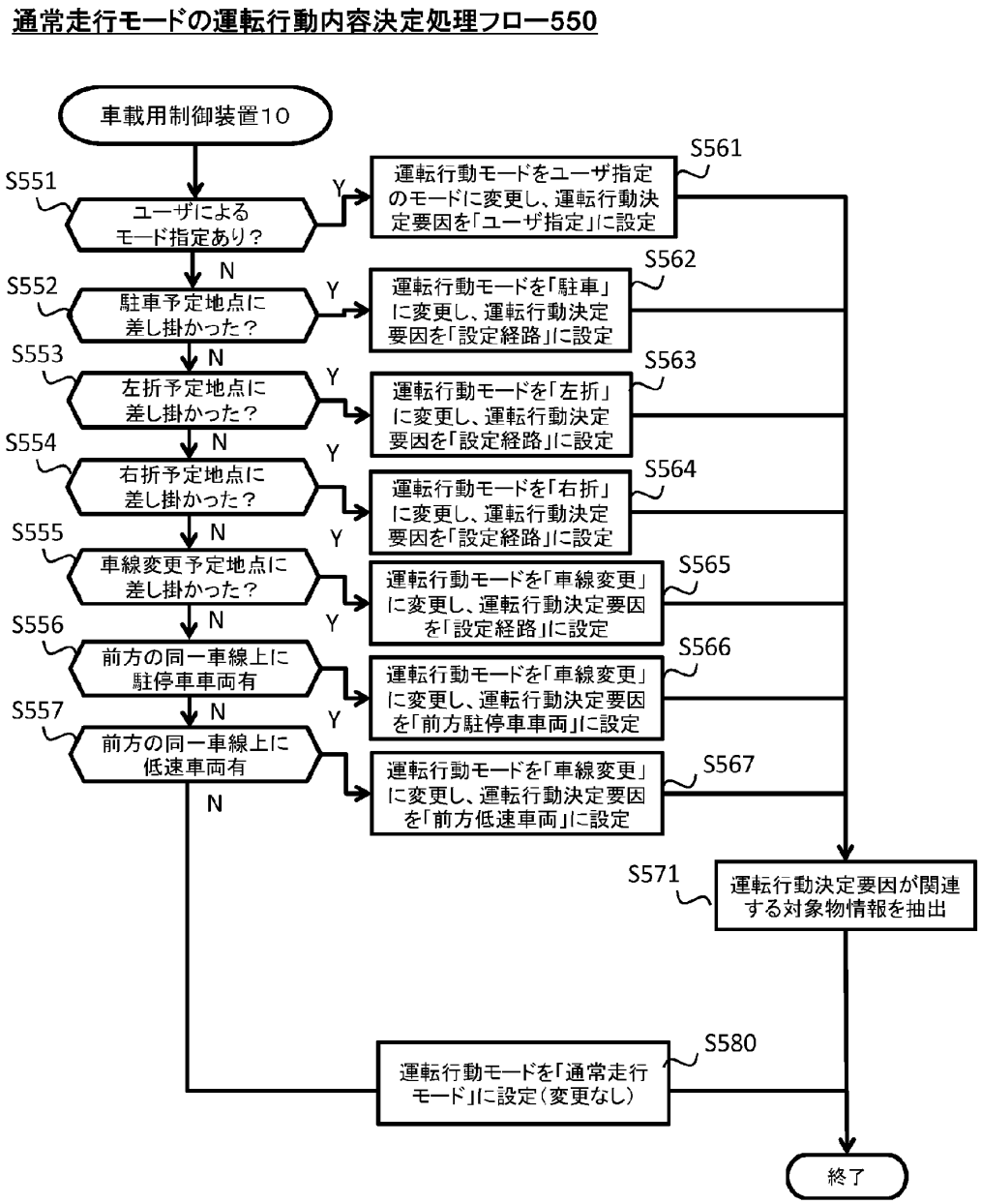
通常走行モードの運転行動内容決定処理フロー550
車載用制御装置10
S551
ユーザによるモード指定あり？
Y
N
S561
運転行動モードをユーザ指定のモードに変更し、運転行動決定要因を「ユーザ指定」に設定
S552
駐車予定地点に差し掛かった？
S562
運転行動モードを「駐車」に変更し、運転行動決定要因を「設定経路」に設定
S553
左折予定地点に差し掛かった？
S563
運転行動モードを「左折」に変更し、運転行動決定要因を「設定経路」に設定
S554
右折予定地点に差し掛かった？
S564
運転行動モードを「右折」に変更し、運転行動決定要因を「設定経路」に設定
S555
車線変更予定地点に差し掛かった？
S565
運転行動モードを「車線変更」に変更し、運転行動決定要因を「設定経路」に設定
S556
前方の同一車線上に駐停車車両有
S566
運転行動モードを「車線変更」に変更し、運転行動決定要因を「前方駐停車車両」に設定
S557
前方の同一車線上に低速車両有
S567
運転行動モードを「車線変更」に変更し、運転行動決定要因を「前方低速車両」に設定
S571
運転行動決定要因が関連する対象物情報を抽出
S580
運転行動モードを「通常走行モード」に設定（変更なし）
終了

［図7］

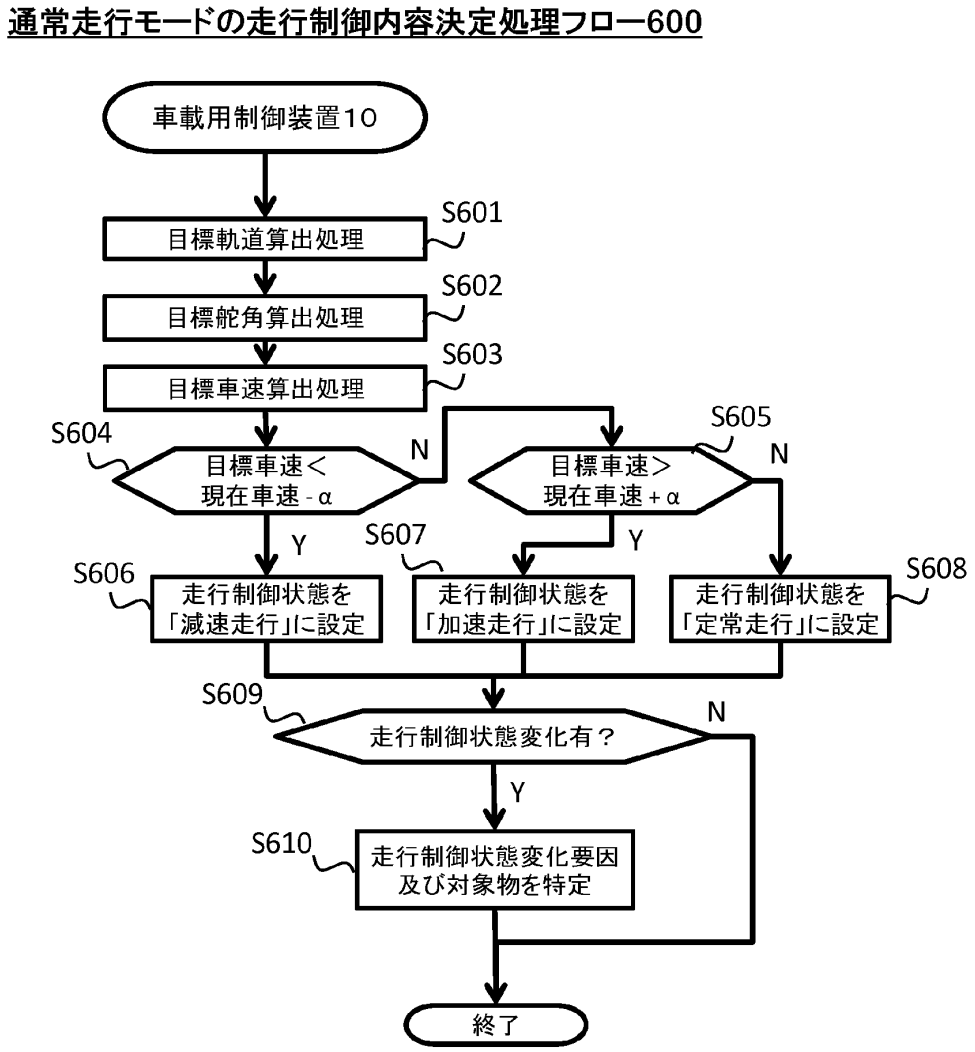
通常走行モードの走行制御内容決定処理フロー600
車載用制御装置10
目標軌道算出処理
S601
目標舵角算出処理
S602
目標車速算出処理
S603
S604
目標車速＜
現在車速 - α
N
S605
目標車速＞
現在車速 + α
N
Y
S607
Y
S606
走行制御状態を
「減速走行」に設定
走行制御状態を
「加速走行」に設定
走行制御状態を
「定常走行」に設定
S608
S609
走行制御状態変化有？
N
Y
S610
走行制御状態変化要因
及び対象物を特定
終了

[図8]

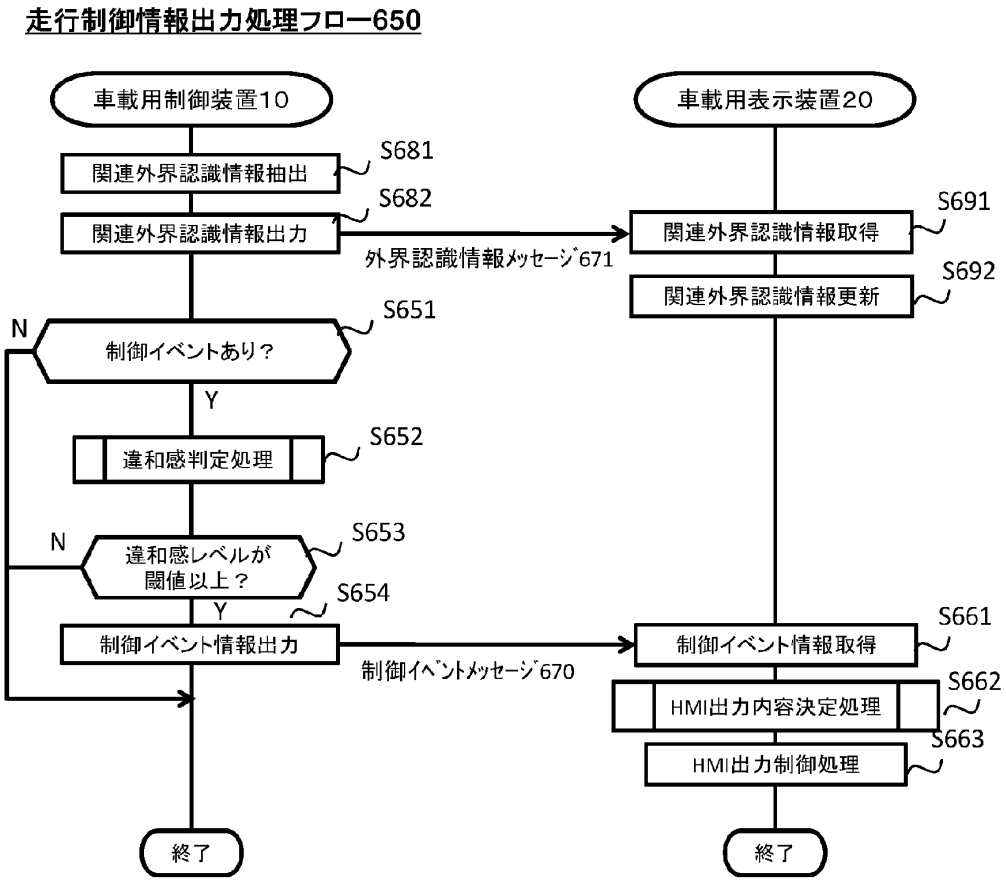
走行制御情報出力処理フロー650
車載用制御装置10
車載用表示装置20
関連外界認識情報抽出
S681
関連外界認識情報出力
S682
外界認識情報メッセージ671
関連外界認識情報取得
S691
関連外界認識情報更新
S692
N
制御イベントあり？
S651
Y
違和感判定処理
S652
N
違和感レベルが
閾値以上？
S653
Y
S654
制御イベント情報出力
制御イベントメッセージ670
制御イベント情報取得
S661
HMI出力内容決定処理
S662
HMI出力制御処理
S663
終了
終了

[図9]

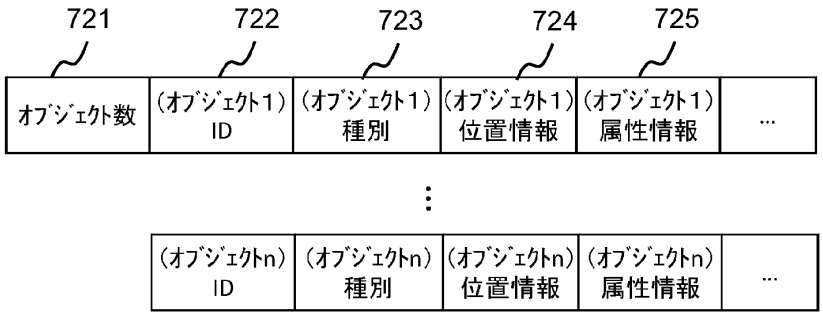
外界認識情報ﾒｯｾｰｼﾞﾌｫｰﾏｯﾄ720
721
722
723
724
725
ｵﾌﾞｼﾞｪｸﾄ数
(ｵﾌﾞｼﾞｪｸﾄ1) ID
(ｵﾌﾞｼﾞｪｸﾄ1) 種別
(ｵﾌﾞｼﾞｪｸﾄ1) 位置情報
(ｵﾌﾞｼﾞｪｸﾄ1) 属性情報
…
(ｵﾌﾞｼﾞｪｸﾄn) ID
(ｵﾌﾞｼﾞｪｸﾄn) 種別
(ｵﾌﾞｼﾞｪｸﾄn) 位置情報
(ｵﾌﾞｼﾞｪｸﾄn) 属性情報
…

[図10]

違和感判定処理フロー700

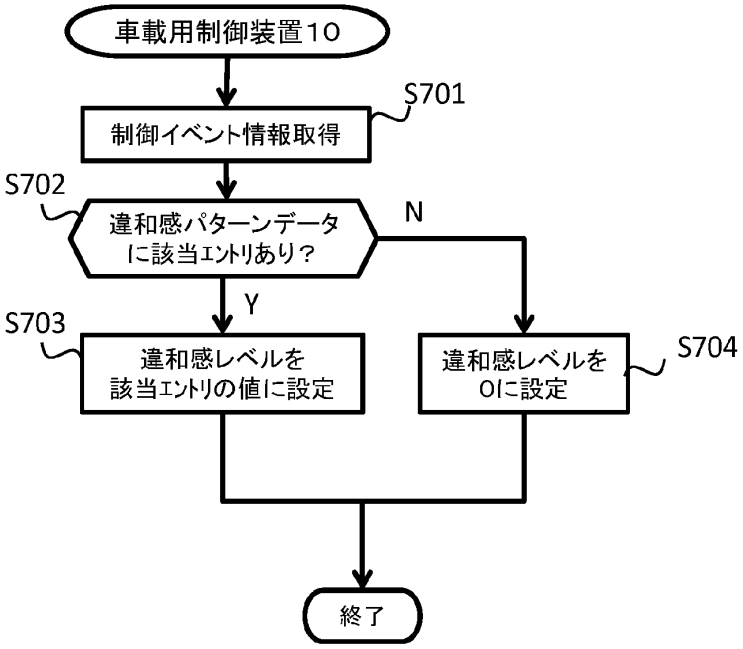

[図11]

制御ｲﾍﾞﾝﾄﾒｯｾｰｼﾞﾌｫｰﾏｯﾄ750

751	752	753	754	755	756	
制御ｲﾍﾞﾝﾄ種別	運転行動種別	走行制御種別	制御ｲﾍﾞﾝﾄ要因	制御ｲﾍﾞﾝﾄ要因対象物ID	違和感レベル	…

[図12]

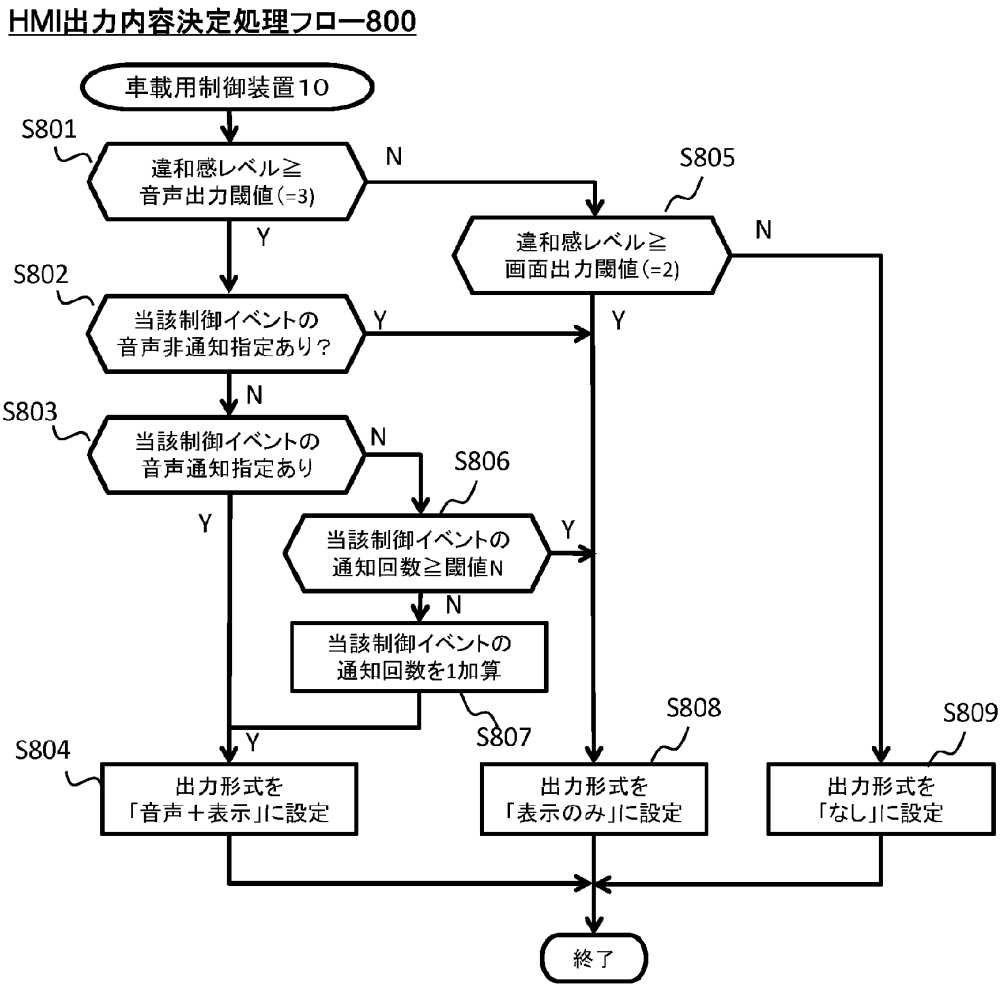
HMI出力内容決定処理フロー800
車載用制御装置10
S801
違和感レベル≧
音声出力閾値(=3)
N
Y
S805
違和感レベル≧
画面出力閾値(=2)
N
S802
当該制御イベントの
音声非通知指定あり？
Y
Y
N
S803
当該制御イベントの
音声通知指定あり
N
S806
Y
当該制御イベントの
通知回数≧閾値N
Y
N
当該制御イベントの
通知回数を1加算
S807
S808
S809
S804
Y
出力形式を
「音声＋表示」に設定
出力形式を
「表示のみ」に設定
出力形式を
「なし」に設定
終了

[図13]

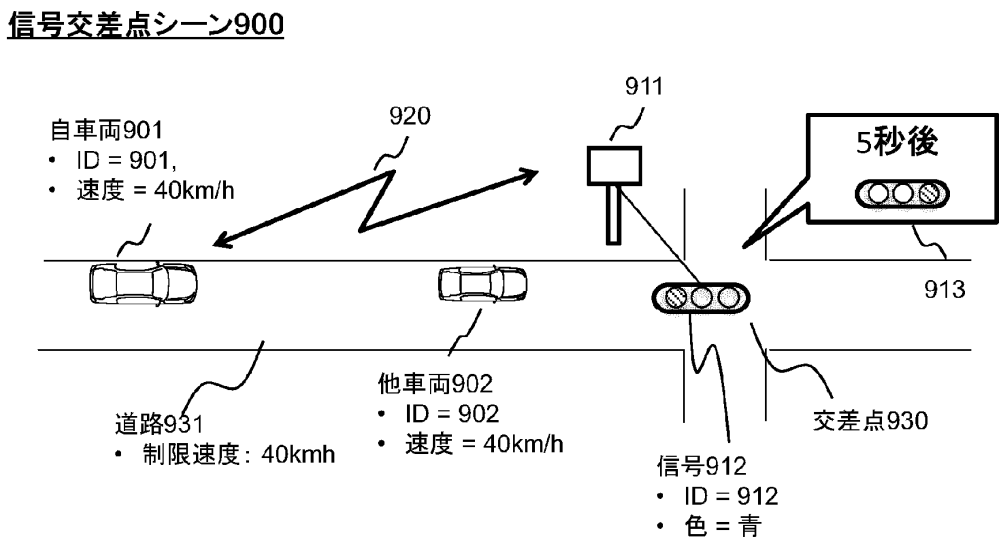
信号交差点シーン900
911
920
自車両901
• ID = 901,
• 速度 = 40km/h
5秒後
913
他車両902
• ID = 902
• 速度 = 40km/h
道路931
• 制限速度: 40kmh
交差点930
信号912
• ID = 912
• 色 = 青

[図14]

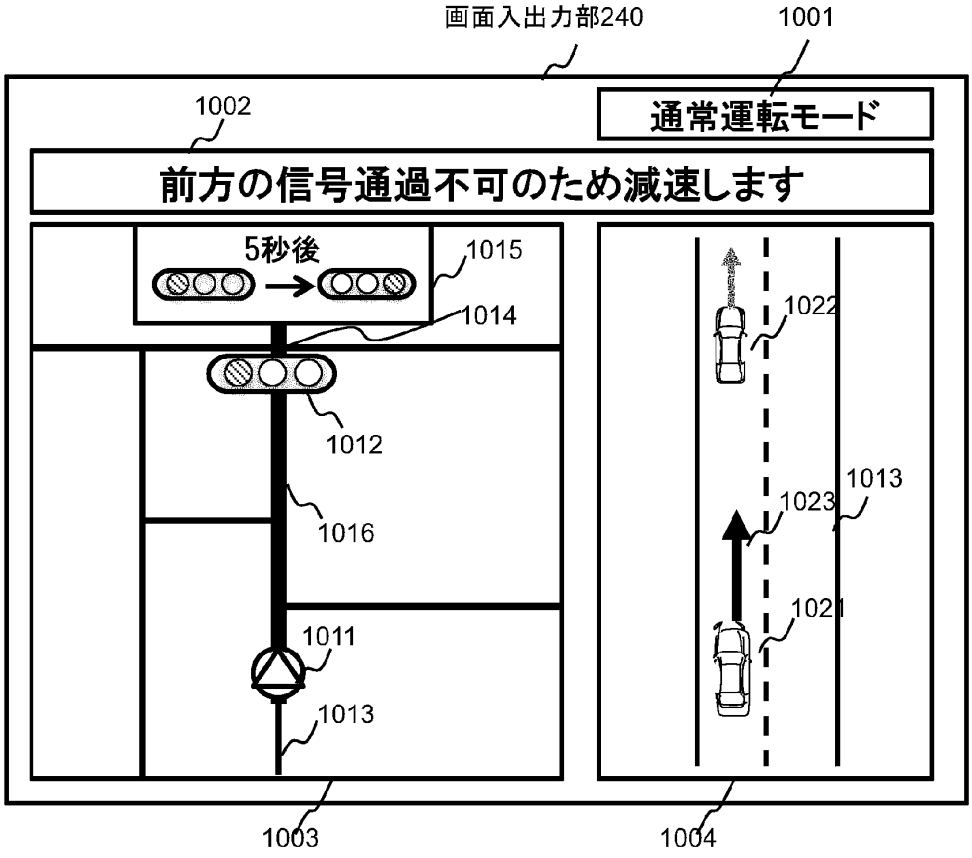
画面入出力部240
1001
1002
通常運転モード
前方の信号通過不可のため減速します
5秒後
1015
1014
1012
1016
1011
1013
1022
1013
1023
1021
1003
1004

[図15]

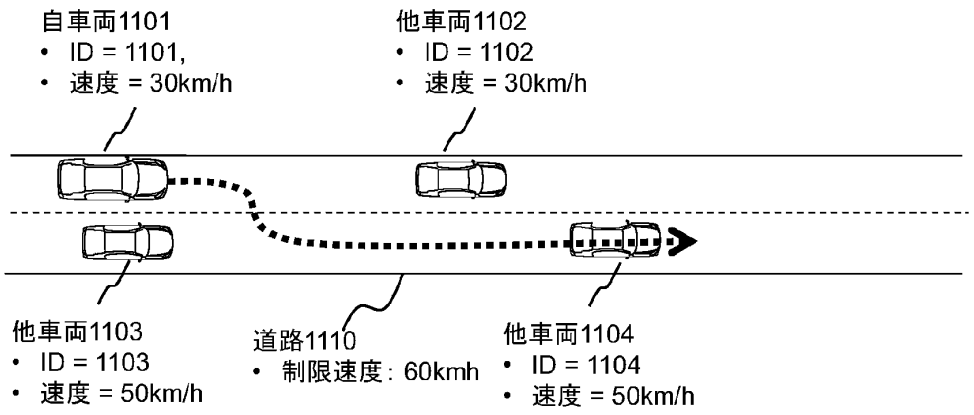
車線変更シーン1100
自車両1101
• ID = 1101,
• 速度 = 30km/h
他車両1102
• ID = 1102
• 速度 = 30km/h
他車両1103
• ID = 1103
• 速度 = 50km/h
道路1110
• 制限速度: 60kmh
他車両1104
• ID = 1104
• 速度 = 50km/h

[図16]

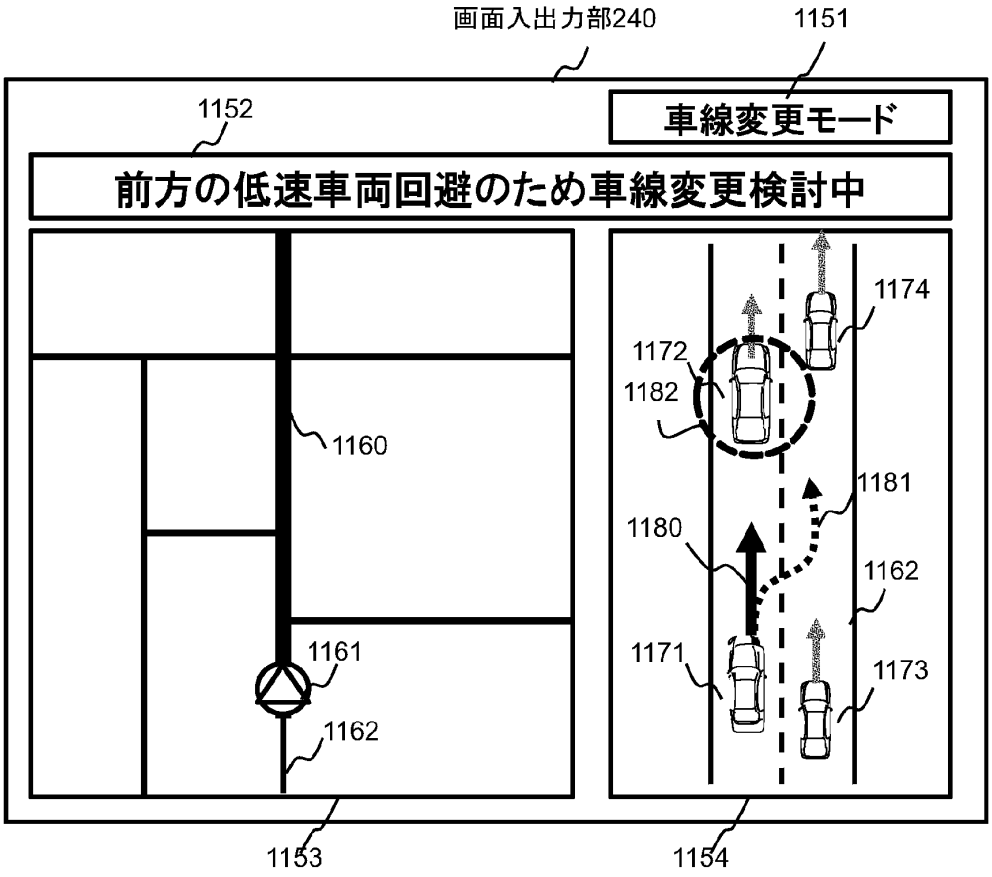
画面入出力部240
1151
車線変更モード
1152
前方の低速車両回避のため車線変更検討中
1160
1161
1162
1153
1174
1172
1182
1181
1180
1162
1171
1173
1154

[図17]

違和感判定処理フロー1200

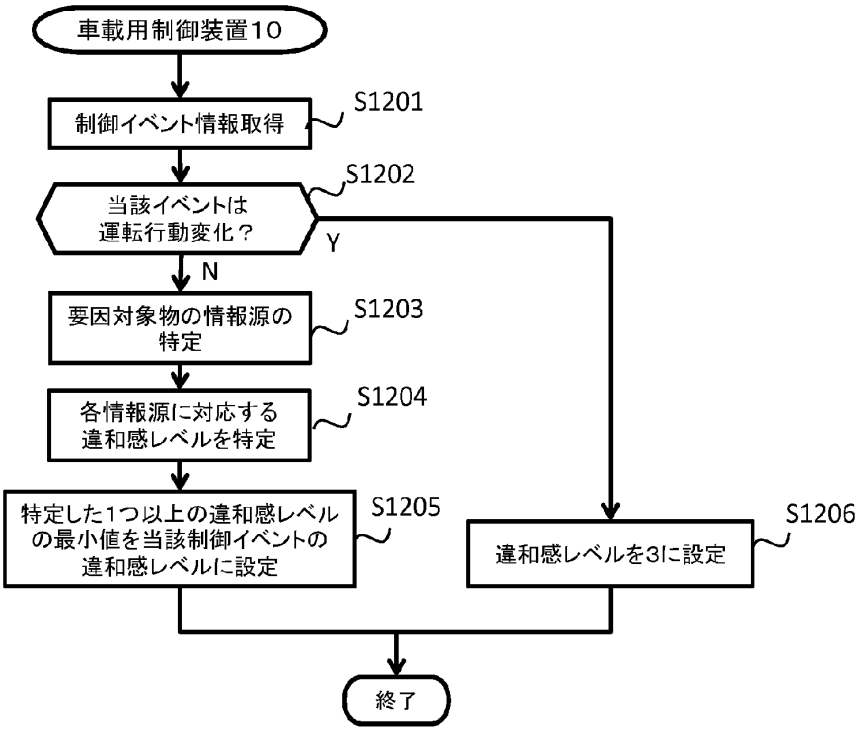

[図18]

制御違和感パターンデータ群1300

#	情報源種別 (1301)	特有条件 (1302)	違和感レベル (1303)
1	可視光カメラ	Any	0
2	ミリ波レーダ	150m <= 相対距離	3
3	ミリ波レーダ	80m <= 相対距離 < 150m	2
4	ミリ波レーダ	相対距離 < 80m	0
5	レーザレーダ	Any	0
6	赤外線カメラ	夜間	2
7	赤外線カメラ	夜間以外	1
8	無線通信	Any	3
…	…	…	…

[図19]

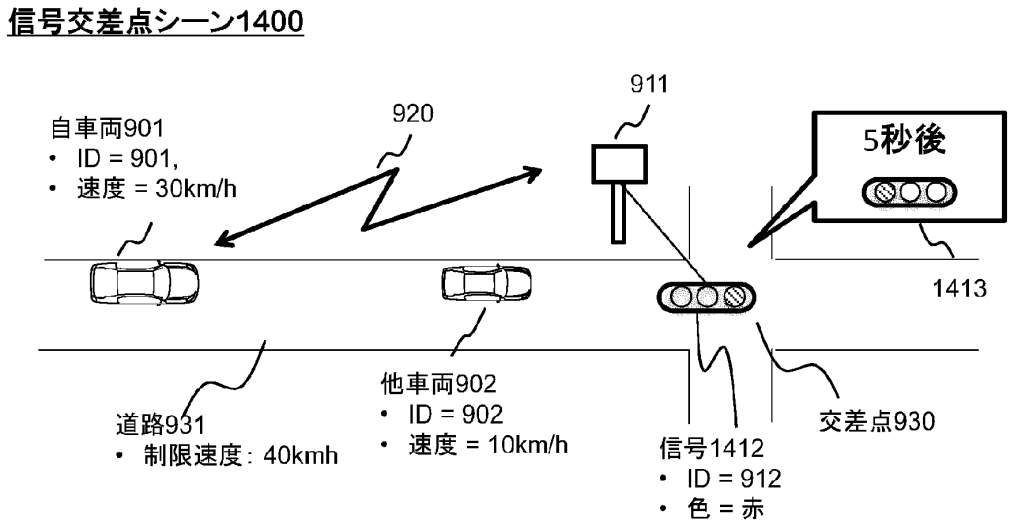
信号交差点シーン1400
911
920
自車両901
• ID = 901,
• 速度 = 30km/h
5秒後
1413
他車両902
• ID = 902
• 速度 = 10km/h
道路931
• 制限速度: 40kmh
信号1412
• ID = 912
• 色 = 赤
交差点930

[図20]

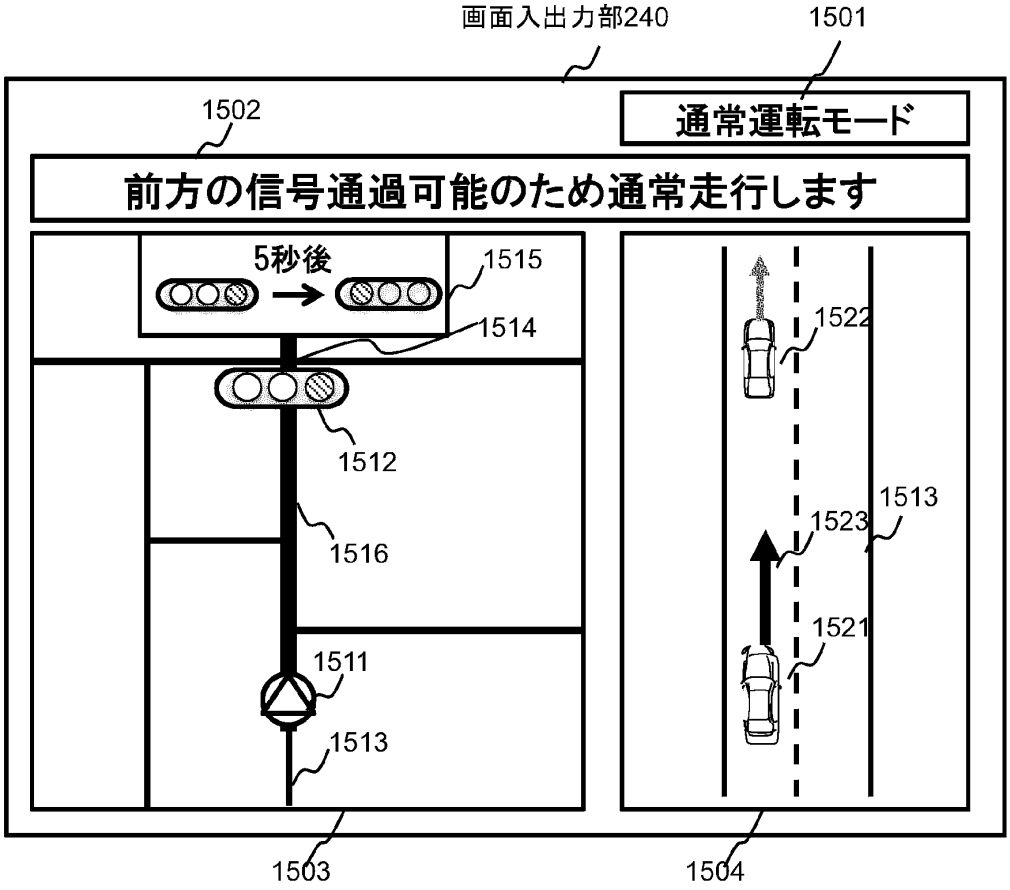
画面入出力部240
1501
通常運転モード
1502
前方の信号通過可能のため通常走行します
5秒後
1515
1514
1512
1516
1511
1513
1522
1513
1523
1521
1503
1504

INTERNATIONAL SEARCH REPORT

International application No.
PCT/JP2015/059567

A. CLASSIFICATION OF SUBJECT MATTER
B60W50/14(2012.01)i, *B60R16/02*(2006.01)i, *B60W30/00*(2006.01)i, *B60W40/04*(2006.01)i, *B60W40/06*(2012.01)i, *G08G1/16*(2006.01)i

According to International Patent Classification (IPC) or to both national classification and IPC

B. FIELDS SEARCHED

Minimum documentation searched (classification system followed by classification symbols)
B60W50/14, B60R16/02, B60W30/00, B60W40/04, B60W40/06, G08G1/16

Documentation searched other than minimum documentation to the extent that such documents are included in the fields searched

Jitsuyo Shinan Koho	1922-1996	Jitsuyo Shinan Toroku Koho	1996-2015
Kokai Jitsuyo Shinan Koho	1971-2015	Toroku Jitsuyo Shinan Koho	1994-2015

Electronic data base consulted during the international search (name of data base and, where practicable, search terms used)

C. DOCUMENTS CONSIDERED TO BE RELEVANT

Category*	Citation of document, with indication, where appropriate, of the relevant passages	Relevant to claim No.
X Y A	JP 2008-097501 A (Nissan Motor Co., Ltd.), 24 April 2008 (24.04.2008), paragraphs [0011] to [0022], [0027] to [0033] (Family: none)	10-11,14 1-8,12-13,15 9
Y A	JP 2005-199875 A (Nippon Seiki Co., Ltd.), 28 July 2005 (28.07.2005), paragraphs [0030] to [0035] & US 2007/0159313 A1 & WO 2005/068261 A1 & EP 1710127 A1 & CN 1906060 A & CN 101311023 A	1-8,12-13,15 9
Y A	JP 2010-198311 A (Toyota Motor Corp.), 09 September 2010 (09.09.2010), paragraphs [0031], [0052] (Family: none)	5-8 9

☒ Further documents are listed in the continuation of Box C. ☐ See patent family annex.

* Special categories of cited documents:
"A" document defining the general state of the art which is not considered to be of particular relevance
"E" earlier application or patent but published on or after the international filing date
"L" document which may throw doubts on priority claim(s) or which is cited to establish the publication date of another citation or other special reason (as specified)
"O" document referring to an oral disclosure, use, exhibition or other means
"P" document published prior to the international filing date but later than the priority date claimed
"T" later document published after the international filing date or priority date and not in conflict with the application but cited to understand the principle or theory underlying the invention
"X" document of particular relevance; the claimed invention cannot be considered novel or cannot be considered to involve an inventive step when the document is taken alone
"Y" document of particular relevance; the claimed invention cannot be considered to involve an inventive step when the document is combined with one or more other such documents, such combination being obvious to a person skilled in the art
"&" document member of the same patent family

Date of the actual completion of the international search 15 June 2015 (15.06.15)	Date of mailing of the international search report 30 June 2015 (30.06.15)
Name and mailing address of the ISA/ Japan Patent Office 3-4-3,Kasumigaseki,Chiyoda-ku, Tokyo 100-8915,Japan	Authorized officer Telephone No.

Form PCT/ISA/210 (second sheet) (July 2009)

INTERNATIONAL SEARCH REPORT

International application No.
PCT/JP2015/059567

C (Continuation). DOCUMENTS CONSIDERED TO BE RELEVANT

Category*	Citation of document, with indication, where appropriate, of the relevant passages	Relevant to claim No.
A	JP 2000-337492 A (Equos Research Co., Ltd.), 05 December 2000 (05.12.2000), paragraphs [0032] to [0038] & JP 9-226404 A & US 5893894 A	1-15
A	JP 2012-038082 A (Denso Corp.), 23 February 2012 (23.02.2012), paragraph [0095] (Family: none)	1-15
A	JP 2011-131883 A (Fujitsu Ten Ltd.), 07 July 2011 (07.07.2011), paragraphs [0043], [0084] (Family: none)	1-15

国際調査報告

国際出願番号　ＰＣＴ／ＪＰ２０１５／０５９５６７

Ａ．　発明の属する分野の分類（国際特許分類（ＩＰＣ））

Int.Cl.　B60W50/14(2012.01)i, B60R16/02(2006.01)i, B60W30/00(2006.01)i, B60W40/04(2006.01)i, B60W40/06(2012.01)i, G08G1/16(2006.01)i

Ｂ．　調査を行った分野

調査を行った最小限資料（国際特許分類（ＩＰＣ））

Int.Cl.　B60W50/14, B60R16/02, B60W30/00, B60W40/04, B60W40/06, G08G1/16

最小限資料以外の資料で調査を行った分野に含まれるもの

日本国実用新案公報	１９２２－１９９６年
日本国公開実用新案公報	１９７１－２０１５年
日本国実用新案登録公報	１９９６－２０１５年
日本国登録実用新案公報	１９９４－２０１５年

国際調査で使用した電子データベース（データベースの名称、調査に使用した用語）

Ｃ．　関連すると認められる文献

引用文献のカテゴリー＊	引用文献名　及び一部の箇所が関連するときは、その関連する箇所の表示	関連する請求項の番号
X Y A	JP 2008-097501 A (日産自動車株式会社) 2008.04.24, 段落[0011]-[0022],[0027]-[0033] (ファミリーなし)	10-11,14 1-8,12-13,15 9
Y A	JP 2005-199875 A (日本精機株式会社) 2005.07.28, 段落[0030]-[0035] & US 2007/0159313 A1 & WO 2005/068261 A1 & EP 1710127 A1 & CN 1906060 A & CN 101311023 A	1-8,12-13,15 9

☑　Ｃ欄の続きにも文献が列挙されている。　☐　パテントファミリーに関する別紙を参照。

＊　引用文献のカテゴリー
「Ａ」特に関連のある文献ではなく、一般的技術水準を示すもの
「Ｅ」国際出願日前の出願または特許であるが、国際出願日以後に公表されたもの
「Ｌ」優先権主張に疑義を提起する文献又は他の文献の発行日若しくは他の特別な理由を確立するために引用する文献（理由を付す）
「Ｏ」口頭による開示、使用、展示等に言及する文献
「Ｐ」国際出願日前で、かつ優先権の主張の基礎となる出願の日の後に公表された文献
「Ｔ」国際出願日又は優先日後に公表された文献であって出願と矛盾するものではなく、発明の原理又は理論の理解のために引用するもの
「Ｘ」特に関連のある文献であって、当該文献のみで発明の新規性又は進歩性がないと考えられるもの
「Ｙ」特に関連のある文献であって、当該文献と他の１以上の文献との、当業者にとって自明である組合せによって進歩性がないと考えられるもの
「&」同一パテントファミリー文献

国際調査を完了した日	国際調査報告の発送日
１５．０６．２０１５	３０．０６．２０１５

国際調査機関の名称及びあて先	特許庁審査官（権限のある職員）	３Ｚ	９７１６
日本国特許庁（ＩＳＡ／ＪＰ） 郵便番号１００－８９１５ 東京都千代田区霞が関三丁目４番３号	▲高▼木　真顕 電話番号　０３－３５８１－１１０１　内線　３３９５		

様式ＰＣＴ／ＩＳＡ／２１０（第２ページ）（２００９年７月）

Ｃ（続き）．　関連すると認められる文献

引用文献のカテゴリー＊	引用文献名　及び一部の箇所が関連するときは、その関連する箇所の表示	関連する請求項の番号
Y A	JP 2010-198311 A（トヨタ自動車株式会社）2010.09.09, 段落[0031],[0052]（ファミリーなし）	5-8 9
A	JP 2000-337492 A（株式会社エクォス・リサーチ）2000.12.05, 段落[0032]-[0038] & JP 9-226404 A & US 5893894 A	1-15
A	JP 2012-038082 A（株式会社デンソー）2012.02.23, 段落[0095]（ファミリーなし）	1-15
A	JP 2011-131883 A（富士通テン株式会社）2011.07.07, 段落[0043],[0084]（ファミリーなし）	1-15

(12) INTERNATIONAL APPLICATION PUBLISHED UNDER THE PATENT COOPERATION TREATY (PCT)

(19) World Intellectual Property Organization
International Bureau

(43) International Publication Date
10 December 2015 (10.12.2015)

WIPO | PCT

(10) International Publication Number
WO 2015/186002 A2

(51) International Patent Classification: *G06K 9/00* (2006.01)

(21) International Application Number: PCT/IB2015/001593

(22) International Filing Date: 3 June 2015 (03.06.2015)

(25) Filing Language: English

(26) Publication Language: English

(30) Priority Data:
62/006,912 3 June 2014 (03.06.2014) US

(71) Applicant: **MOBILEYE VISION TECHNOLOGIES LTD.** [IL/IL]; 13 Hartom Street, P.O.B. 45157, Har Hotzvim, 91450 Jerusalem (IL).

(72) Inventors: **SHASHUA, Amnon**; 13 Hartom Street, P.O.B. 45157, Har Hotzvim, 91450 Jerusalem (IL). **DAGAN, Erez**; 13 Hartom Street, P.O.B. 45157, Har Hotzvim, 91450 Jerusalem (IL). **BABA, Tomer**; 13 Hartom Street, P.O. Box 45157, Har Hotzvim, 91450 Jerusalem (IL). **MYERS, Yoni**; 13 Hartom Street, P.O. Box 45157, Har Hotzvim, 91450 Jerusalem (IL). **HOLLANDER, Yossi**; 13 Hartom Street, P.O. Box 45157, Har Hotzvim, 91450 Jerusalem (IL).

(81) Designated States *(unless otherwise indicated, for every kind of national protection available)*: AE, AG, AL, AM, AO, AT, AU, AZ, BA, BB, BG, BH, BN, BR, BW, BY, BZ, CA, CH, CL, CN, CO, CR, CU, CZ, DE, DK, DM, DO, DZ, EC, EE, EG, ES, FI, GB, GD, GE, GH, GM, GT, HN, HR, HU, ID, IL, IN, IR, IS, JP, KE, KG, KN, KP, KR, KZ, LA, LC, LK, LR, LS, LU, LY, MA, MD, ME, MG, MK, MN, MW, MX, MY, MZ, NA, NG, NI, NO, NZ, OM, PA, PE, PG, PH, PL, PT, QA, RO, RS, RU, RW, SA, SC, SD, SE, SG, SK, SL, SM, ST, SV, SY, TH, TJ, TM, TN, TR, TT, TZ, UA, UG, US, UZ, VC, VN, ZA, ZM, ZW.

(84) Designated States *(unless otherwise indicated, for every kind of regional protection available)*: ARIPO (BW, GH, GM, KE, LR, LS, MW, MZ, NA, RW, SD, SL, ST, SZ, TZ, UG, ZM, ZW), Eurasian (AM, AZ, BY, KG, KZ, RU, TJ, TM), European (AL, AT, BE, BG, CH, CY, CZ, DE, DK, EE, ES, FI, FR, GB, GR, HR, HU, IE, IS, IT, LT, LU, LV, MC, MK, MT, NL, NO, PL, PT, RO, RS, SE, SI, SK, SM, TR), OAPI (BF, BJ, CF, CG, CI, CM, GA, GN, GQ, GW, KM, ML, MR, NE, SN, TD, TG).

Published:

— *without international search report and to be republished upon receipt of that report (Rule 48.2(g))*

(54) Title: SYSTEMS AND METHODS FOR DETECTING AN OBJECT

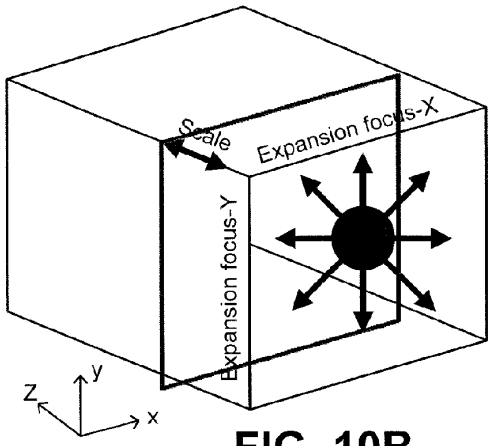

FIG. 10B

(57) Abstract: Systems and methods are provided for detecting an object in front of a vehicle. In one implementation, an object detecting system includes an image capture device configured to acquire a plurality of images of an area, a data interface, and a processing device programmed to compare a first image to a second image to determine displacement vectors between pixels, to search for a region of coherent expansion that is a set of pixels in at least one of the first image and the second image, for which there exists a common focus of expansion and a common scale magnitude such that the set of pixels satisfy a relationship between pixel positions, displacement vectors, the common focus of expansion, and the common scale magnitude, and to identify presence of a substantially upright object based on the set of pixels.

WO 2015/186002 A2

SYSTEMS AND METHODS FOR DETECTING AN OBJECT

Cross Reference to Related Application

[001] This application claims the benefit of priority of United States Provisional Patent Application No. 62/006,912, filed on June 3, 2014. The foregoing application is incorporated herein by reference in its entirety.

BACKGROUND

I. Technical Field

[002] The present disclosure relates generally to autonomous vehicle navigation and, more specifically, to systems and methods that use cameras to detect an object in front of the vehicle.

II. Background Information

[003] As technology continues to advance, the goal of a fully autonomous vehicle that is capable of navigating on roadways is on the horizon. Primarily, an autonomous vehicle may be able to identify its environment and navigate without input from a human operator. Autonomous vehicles may also take into account a variety of factors and make appropriate decisions based on those factors to safely and accurately reach an intended destination. For example, various objects—such as other vehicles and pedestrians—are encountered when a vehicle typically travels a roadway. Autonomous driving systems may recognize these objects in a vehicle's environment and take appropriate and timely action to avoid collisions. Additionally, autonomous driving systems may identify other indicators—such as traffic signals, traffic signs, and lane markings—that regulate vehicle movement (e.g., when the vehicle must stop and may go, a speed at which the vehicle must not exceed, where the vehicle must be positioned on the roadway, etc.). Autonomous driving systems may need to determine when a vehicle should change lanes, turn at intersections, change roadways, etc. As is evident from these examples, many factors may need to be addressed in order to provide an autonomous vehicle that is capable of navigating safely and accurately.

SUMMARY

[004] Embodiments consistent with the present disclosure provide systems and methods for autonomous vehicle navigation. The disclosed embodiments may use cameras to provide autonomous vehicle navigation features. For example, consistent with the disclosed embodiments, the disclosed systems may include one, two, or more cameras that monitor the environment of a vehicle and cause a navigational response based on an analysis of images captured by one or more of the cameras.

[005] Consistent with a disclosed embodiment, an object detecting system for a vehicle is provided. The system may include at least one image capture device configured to acquire a plurality of images of an area in front of the vehicle. The system may include a data interface, and at least one processing device programmed to receive the plurality of images via the data interface. The at least one processing device may also be programmed to compare a first image to a second image to determine displacement vectors between pixels of the first image and pixels of the second image. The at least one processing device may further be programmed to search for a region of coherent expansion that is a set of pixels in at least one of the first image and the second image, for which there exists a common focus of

expansion and a common scale magnitude such that the set of pixels satisfy a relationship between pixel positions, displacement vectors, the common focus of expansion, and the common scale magnitude. The at least one processing device may further be programmed to identify presence of a substantially upright object in at least one of the first image and the second image based on the set of pixels.

[006] Consistent with another disclosed embodiment, a vehicle is provided. The vehicle may include a body. The vehicle may include at least one image capture device configured to acquire a plurality of images of an area in front of the vehicle. The system may include a data interface and at least one processing device programmed to receive the plurality of images via the data interface. The at least one processing device may also be programmed to compare a first image to a second image to determine displacement vectors between pixels of the first image and pixels of the second image. The at least one processing device may further be programmed to search for a region of coherent expansion that is a set of pixels in at least one of the first image and the second image, for which there exists a common focus of expansion and a common scale magnitude such that the set of pixels satisfy a relationship between pixel positions, displacement vectors, the common focus of expansion, and the common scale magnitude. The at least one processing device may further be programmed to identify presence of a substantially upright object in at least one of the first image and the second image based on the set of pixels.

[007] Consistent with yet another disclosed embodiment, a method for detecting an object in front of a vehicle is provided. The method may include acquiring, via at least one image capture device, a plurality of images of an area in front of the vehicle. The method may also include receiving, via a processing device, the plurality of images. The method may also include comparing, via the processing device, a first image to a second image to determine displacement vectors between pixels of the first image and pixels of the second image. The method may further include searching for, via the processing device, a region of coherent expansion that is a set of pixels in at least one of the first image and the second image, for which there exists a common focus of expansion and a common scale magnitude such that the set of pixels satisfy a relationship between pixel positions, displacement vectors, the common focus of expansion, and the common scale magnitude. The method may further include identifying, via the processing device, presence of a substantially upright object in at least one of the first image and the second image based on the set of pixels.

[008] Consistent with another disclosed embodiment, an object detecting system for a vehicle is provided. The object detecting system may include at least one image capture device configured to acquire a plurality of images of an area in front of the vehicle. The system may also include a data interface and at least one processing device programmed to receive the plurality of images via the data interface. The at least one processing device may also be programmed to compare a first image to a second image, and based on the comparison, determine a focus of expansion of a crossing object moving in a direction that crosses a travel direction of the vehicle. The at least one processing device may also be programmed to determine whether a horizontal coordinate of the focus of expansion stays around a center in the horizontal dimension of the crossing object during a period of time. The at least one processing device may further be programmed to cause the vehicle to brake based on the determination that the

horizontal coordinate of the focus of expansion stays around the center in the horizontal dimension of the crossing object during the period of time.

[009] Consistent with another disclosed embodiment, a vehicle is provided. The vehicle may include a body, and at least one image capture device configured to acquire a plurality of images of an area in front of the vehicle. The system may also include a data interface and at least one processing device programmed to receive the plurality of images via the data interface. The at least one processing device may also be programmed to compare a first image to a second image, and based on the comparison, determine a focus of expansion of a crossing object moving in a direction that crosses a travel direction of the vehicle. The at least one processing device may also be programmed to determine whether a horizontal coordinate of the focus of expansion stays around a center in the horizontal dimension of the crossing object during a period of time. The at least one processing device may further be programmed to cause the vehicle to brake based on the determination that the horizontal coordinate of the focus of expansion stays around the center in the horizontal dimension of the crossing object during the period of time.

[010] Consistent with another disclosed embodiment, a method for detecting an object in front of a vehicle is provided. The method may include acquiring, via at least one image capture device, a plurality of images of an area in front of the vehicle. The method may include receiving, via a processing device, the plurality of images. The method may also include comparing, via the processing device, a first image to a second image, and based on the comparison, determining a focus of expansion of a crossing object moving in a direction that crosses a travel direction of the vehicle. The method may also include determining, via the processing device, whether a horizontal coordinate of the focus of expansion stays around a center in the horizontal dimension of the crossing object during a period of time. The method may also include causing, via the processing device, the vehicle to brake based on the determination that the horizontal coordinate of the focus of expansion stays around a center in the horizontal dimension of the crossing object during the period of time.

[011] Consistent with other disclosed embodiments, non-transitory computer-readable storage media may store program instructions, which are executed by at least one processing device and perform any of the methods described herein.

[012] The foregoing general description and the following detailed description are exemplary and explanatory only and are not restrictive of the claims.

BRIEF DESCRIPTION OF THE DRAWINGS

[013] The accompanying drawings, which are incorporated in and constitute a part of this disclosure, illustrate various disclosed embodiments. In the drawings:

[014] FIG. 1 is a diagrammatic representation of an exemplary system consistent with the disclosed embodiments.

[015] FIG. 2A is a diagrammatic side view representation of an exemplary vehicle including a system consistent with the disclosed embodiments.

[016] FIG. 2B is a diagrammatic top view representation of the vehicle and system shown in FIG. 2A consistent with the disclosed embodiments.

[017] FIG. 2C is a diagrammatic top view representation of another embodiment of a vehicle including a system consistent with the disclosed embodiments.

[018] FIG. 2D is a diagrammatic top view representation of yet another embodiment of a vehicle including a system consistent with the disclosed embodiments.

[019] FIG. 2E is a diagrammatic top view representation of yet another embodiment of a vehicle including a system consistent with the disclosed embodiments.

[020] FIG. 2F is a diagrammatic representation of exemplary vehicle control systems consistent with the disclosed embodiments.

[021] FIG. 3A is a diagrammatic representation of an interior of a vehicle including a rearview mirror and a user interface for a vehicle imaging system consistent with the disclosed embodiments.

[022] FIG. 3B is an illustration of an example of a camera mount that is configured to be positioned behind a rearview mirror and against a vehicle windshield consistent with the disclosed embodiments.

[023] FIG. 3C is an illustration of the camera mount shown in FIG. 3B from a different perspective consistent with the disclosed embodiments.

[024] FIG. 3D is an illustration of an example of a camera mount that is configured to be positioned behind a rearview mirror and against a vehicle windshield consistent with the disclosed embodiments.

[025] FIG. 4 is an exemplary block diagram of a memory configured to store instructions for performing one or more operations consistent with the disclosed embodiments.

[026] FIG. 5A is a flowchart showing an exemplary process for causing one or more navigational responses based on monocular image analysis consistent with disclosed embodiments.

[027] FIG. 5B is a flowchart showing an exemplary process for detecting one or more vehicles and/or pedestrians in a set of images consistent with the disclosed embodiments.

[028] FIG. 5C is a flowchart showing an exemplary process for detecting road marks and/or lane geometry information in a set of images consistent with the disclosed embodiments.

[029] FIG. 5D is a flowchart showing an exemplary process for detecting traffic lights in a set of images consistent with the disclosed embodiments.

[030] FIG. 5E is a flowchart showing an exemplary process for causing one or more navigational responses based on a vehicle path consistent with the disclosed embodiments.

[031] FIG. 5F is a flowchart showing an exemplary process for determining whether a leading vehicle is changing lanes consistent with the disclosed embodiments.

[032] FIG. 6 is a flowchart showing an exemplary process for causing one or more navigational responses based on stereo image analysis consistent with the disclosed embodiments.

[033] FIG. 7 is a flowchart showing an exemplary process for causing one or more navigational responses based on an analysis of three sets of images consistent with the disclosed embodiments.

[034] FIG. 8 is a diagrammatic representation of an exemplary vehicle including an object detecting system traveling on a road behind another vehicle consistent with the disclosed embodiments.

[035] FIG. 9 is an exemplary block diagram of a memory that may store instructions for performing one or more operations for detecting an object in front of the vehicle consistent with the disclosed embodiments.

[036] FIG. 10A is an exemplary image of an area showing vectors associated with pixels consistent with the disclosed embodiments.

[037] FIG. 10B is a schematic illustration of an exemplary relationship between the focus of expansion and the scale magnitude consistent with the disclosed embodiments.

[038] FIG. 10C shows an exemplary method of identifying a substantially upright object based on selected pixels consistent with the disclosed embodiments.

[039] FIG. 11 is a flowchart showing an exemplary process for detecting presence of an object in front of the vehicle consistent with the disclosed embodiments.

[040] FIG. 12A is an image of a static environment consistent with the disclosed embodiments.

[041] FIG. 12B is a three-dimensional cube space illustrating an exemplary relationship between the focus of expansion and the scale magnitude corresponding to the static environment of FIG. 12A consistent with the disclosed embodiments.

[042] FIG. 13A is an image of a environment having another vehicle static in the environment or traveling in a direction parallel to the traveling direction of the vehicle where object detecting system is installed consistent with the disclosed embodiments.

[043] FIG. 13B is a three-dimensional cube space illustrating an exemplary relationship between the focus of expansion and the scale magnitude corresponding to the image of FIG. 13A consistent with the disclosed embodiments.

[044] FIG. 13C is an image of a environment having another vehicle traveling longitudinally in front of and in alignment with the vehicle where object detecting system is installed consistent with the disclosed embodiments.

[045] FIG. 13D is a three-dimensional cube space illustrating an exemplary relationship between the focus of expansion and the scale magnitude corresponding to the image of FIG. 13C consistent with the disclosed embodiments.

[046] FIG. 14A is an image of an environment superimposed with an exemplary optical flow field consistent with the disclosed embodiments.

[047] FIG. 14B is a three-dimensional cube space illustrating two exemplary focuses of expansion corresponding to the vehicle object and the pedestrian object shown in FIG. 14A consistent with the disclosed embodiments.

[048] FIG. 15A shows a diagram illustrating an exemplary method of detecting a crossing-to-impact object consistent with the disclosed embodiment.

[049] FIG. 15B shows an image having a pedestrian crossing the road in front of the vehicle consistent with the disclosed embodiment.

[050] FIG. 15C shows an image having a pedestrian crossing the road in front of the vehicle acquired at a time after the image shown in FIG. 15B is acquired, consistent with the disclosed embodiments.

[051] FIG. 16 is a flowchart showing an exemplary process for detecting an object in front of the vehicle consistent with the disclosed embodiments.

[052] FIG. 17 illustrates an exemplary method of detecting an object consistent with the disclosed embodiments.

DETAILED DESCRIPTION

[053] The following detailed description refers to the accompanying drawings. Wherever possible, the same reference numbers are used in the drawings and the following description to refer to the same or similar parts. While several illustrative embodiments are described herein, modifications, adaptations and other implementations are possible. For example, substitutions, additions or modifications may be made to the components illustrated in the drawings, and the illustrative methods described herein may be modified by substituting, reordering, removing, or adding steps to the disclosed methods. Accordingly, the following detailed description is not limited to the disclosed embodiments and examples. Instead, the proper scope is defined by the appended claims.

[054] FIG. 1 is a block diagram representation of a system 100 consistent with the exemplary disclosed embodiments. System 100 may include various components depending on the requirements of a particular implementation. In some embodiments, system 100 may include a processing unit 110, an image acquisition unit 120, a position sensor 130, one or more memory units 140, 150, a map database 160, and a user interface 170. Processing unit 110 may include one or more processing devices. In some embodiments, processing unit 110 may include an applications processor 180, an image processor 190, or any other suitable processing device. Similarly, image acquisition unit 120 may include any number of image acquisition devices and components depending on the requirements of a particular application. In some embodiments, image acquisition unit 120 may include one or more image capture devices (e.g., cameras), such as image capture device 122, image capture device 124, and image capture device 126. System 100 may also include a data interface 128 communicatively connecting processing device 110 to image acquisition device 120. For example, data interface 128 may include any wired and/or wireless link or links for transmitting image data acquired by image accusation device 120 to processing unit 110.

[055] Both applications processor 180 and image processor 190 may include various types of processing devices. For example, either or both of applications processor 180 and image processor 190 may include a microprocessor, preprocessors (such as an image preprocessor), graphics processors, a central processing unit (CPU), support circuits, digital signal processors, integrated circuits, memory, or any other types of devices suitable for running applications and for image processing and analysis. In some embodiments, applications processor 180 and/or image processor 190 may include any type of single or multi-core processor, mobile device microcontroller, central processing unit, etc. Various processing devices may be used, including, for example, processors available from manufacturers such as Intel®, AMD®, etc. and may include various architectures (e.g., x86 processor, ARM®, etc.).

[056] In some embodiments, applications processor 180 and/or image processor 190 may include any of the EyeQ series of processor chips available from Mobileye®. These processor designs each include multiple processing units with local memory and instruction sets. Such processors may include video inputs for receiving image data from multiple image sensors and may also include video out capabilities. In one example, the EyeQ2® uses 90nm-micron technology operating at 332Mhz. The EyeQ2® architecture consists of two floating point, hyper-thread 32-bit RISC CPUs (MIPS32® 34K® cores), five Vision Computing Engines (VCE), three Vector Microcode Processors (VMP®), Denali 64-bit Mobile DDR Controller, 128-bit internal Sonics Interconnect, dual 16-bit Video input and 18-bit Video output controllers, 16 channels DMA and several peripherals. The MIPS34K CPU manages the five VCEs, three VMP™ and the DMA, the second MIPS34K CPU and the multi-channel DMA as well as the other peripherals. The five VCEs, three VMP® and the MIPS34K CPU can perform intensive vision computations required by multi-function bundle applications. In another example, the EyeQ3®, which is a third generation processor and is six times more powerful that the EyeQ2®, may be used in the disclosed embodiments.

[057] Any of the processing devices disclosed herein may be configured to perform certain functions. Configuring a processing device, such as any of the described EyeQ processors or other controller or microprocessor, to perform certain functions may include programming of computer executable instructions and making those instructions available to the processing device for execution during operation of the processing device. In some embodiments, configuring a processing device may include programming the processing device directly with architectural instructions. In other embodiments, configuring a processing device may include storing executable instructions on a memory that is accessible to the processing device during operation. For example, the processing device may access the memory to obtain and execute the stored instructions during operation.

[058] While FIG. 1 depicts two separate processing devices included in processing unit 110, more or fewer processing devices may be used. For example, in some embodiments, a single processing device may be used to accomplish the tasks of applications processor 180 and image processor 190. In other embodiments, these tasks may be performed by more than two processing devices.

[059] Processing unit 110 may comprise various types of devices. For example, processing unit 110 may include various devices, such as a controller, an image preprocessor, a central processing unit (CPU), support circuits, digital signal processors, integrated circuits, memory, or any other types of devices for image processing and analysis. The image preprocessor may include a video processor for capturing, digitizing and processing the imagery from the image sensors. The CPU may comprise any number of microcontrollers or microprocessors. The support circuits may be any number of circuits generally well known in the art, including cache, power supply, clock and input-output circuits. The memory may store software that, when executed by the processor, controls the operation of the system. The memory may include databases and image processing software. The memory may comprise any number of random access memories, read only memories, flash memories, disk drives, optical storage, tape storage, removable storage and other types of storage. In one instance, the memory may be separate

from the processing unit 110. In another instance, the memory may be integrated into the processing unit 110.

[060] Each memory 140, 150 may include software instructions that when executed by a processor (e.g., applications processor 180 and/or image processor 190), may control operation of various aspects of system 100. These memory units may include various databases and image processing software. The memory units may include random access memory, read only memory, flash memory, disk drives, optical storage, tape storage, removable storage and/or any other types of storage. In some embodiments, memory units 140, 150 may be separate from the applications processor 180 and/or image processor 190. In other embodiments, these memory units may be integrated into applications processor 180 and/or image processor 190.

[061] Position sensor 130 may include any type of device suitable for determining a location associated with at least one component of system 100. In some embodiments, position sensor 130 may include a GPS receiver. Such receivers can determine a user position and velocity by processing signals broadcasted by global positioning system satellites. Position information from position sensor 130 may be made available to applications processor 180 and/or image processor 190.

[062] User interface 170 may include any device suitable for providing information to or for receiving inputs from one or more users of system 100. In some embodiments, user interface 170 may include user input devices, including, for example, a touchscreen, microphone, keyboard, pointer devices, track wheels, cameras, knobs, buttons, etc. With such input devices, a user may be able to provide information inputs or commands to system 100 by typing instructions or information, providing voice commands, selecting menu options on a screen using buttons, pointers, or eye-tracking capabilities, or through any other suitable techniques for communicating information to system 100.

[063] User interface 170 may be equipped with one or more processing devices configured to provide and receive information to or from a user and process that information for use by, for example, applications processor 180. In some embodiments, such processing devices may execute instructions for recognizing and tracking eye movements, receiving and interpreting voice commands, recognizing and interpreting touches and/or gestures made on a touchscreen, responding to keyboard entries or menu selections, etc. In some embodiments, user interface 170 may include a display, speaker, tactile device, and/or any other devices for providing output information to a user.

[064] Map database 160 may include any type of database for storing map data useful to system 100. In some embodiments, map database 160 may include data relating to the position, in a reference coordinate system, of various items, including roads, water features, geographic features, businesses, points of interest, restaurants, gas stations, etc. Map database 160 may store not only the locations of such items, but also descriptors relating to those items, including, for example, names associated with any of the stored features. In some embodiments, map database 160 may be physically located with other components of system 100. Alternatively or additionally, map database 160 or a portion thereof may be located remotely with respect to other components of system 100 (e.g., processing unit 110). In such

embodiments, information from map database 160 may be downloaded over a wired or wireless data connection to a network (e.g., over a cellular network and/or the Internet, etc.).

[065] Image capture devices 122, 124, and 126 may each include any type of device suitable for capturing at least one image from an environment. Moreover, any number of image capture devices may be used to acquire images for input to the image processor. Some embodiments may include only a single image capture device, while other embodiments may include two, three, or even four or more image capture devices. Image capture devices 122, 124, and 126 will be further described with reference to FIGS. 2B-2E, below.

[066] System 100, or various components thereof, may be incorporated into various different platforms. In some embodiments, system 100 may be included on a vehicle 200, as shown in FIG. 2A. For example, vehicle 200 may be equipped with a processing unit 110 and any of the other components of system 100, as described above relative to FIG. 1. While in some embodiments vehicle 200 may be equipped with only a single image capture device (e.g., camera), in other embodiments, such as those discussed in connection with FIGS. 2B-2E, multiple image capture devices may be used. For example, either of image capture devices 122 and 124 of vehicle 200, as shown in FIG. 2A, may be part of an ADAS (Advanced Driver Assistance Systems) imaging set.

[067] The image capture devices included on vehicle 200 as part of the image acquisition unit 120 may be positioned at any suitable location. In some embodiments, as shown in FIGS. 2A-2E and 3A-3C, image capture device 122 may be located in the vicinity of the rearview mirror. This position may provide a line of sight similar to that of the driver of vehicle 200, which may aid in determining what is and is not visible to the driver. Image capture device 122 may be positioned at any location near the rearview mirror, but placing image capture device 122 on the driver side of the mirror may further aid in obtaining images representative of the driver's field of view and/or line of sight.

[068] Other locations for the image capture devices of image acquisition unit 120 may also be used. For example, image capture device 124 may be located on or in a bumper of vehicle 200. Such a location may be especially suitable for image capture devices having a wide field of view. The line of sight of bumper-located image capture devices can be different from that of the driver and, therefore, the bumper image capture device and driver may not always see the same objects. The image capture devices (e.g., image capture devices 122, 124, and 126) may also be located in other locations. For example, the image capture devices may be located on or in one or both of the side mirrors of vehicle 200, on the roof of vehicle 200, on the hood of vehicle 200, on the trunk of vehicle 200, on the sides of vehicle 200, mounted on, positioned behind, or positioned in front of any of the windows of vehicle 200, and mounted in or near light figures on the front and/or back of vehicle 200, etc.

[069] In addition to image capture devices, vehicle 200 may include various other components of system 100. For example, processing unit 110 may be included on vehicle 200 either integrated with or separate from an engine control unit (ECU) of the vehicle. Vehicle 200 may also be equipped with a position sensor 130, such as a GPS receiver and may also include a map database 160 and memory units 140 and 150.

[070] FIG. 2A is a diagrammatic side view representation of an exemplary vehicle imaging system consistent with the disclosed embodiments. FIG. 2B is a diagrammatic top view illustration of the embodiment shown in FIG. 2A. As illustrated in FIG. 2B, the disclosed embodiments may include a vehicle 200 including in its body a system 100 with a first image capture device 122 positioned in the vicinity of the rearview mirror and/or near the driver of vehicle 200, a second image capture device 124 positioned on or in a bumper region (e.g., one of bumper regions 210) of vehicle 200, and a processing unit 110.

[071] As illustrated in FIG. 2C, image capture devices 122 and 124 may both be positioned in the vicinity of the rearview mirror and/or near the driver of vehicle 200. Additionally, while two image capture devices 122 and 124 are shown in FIGS. 2B and 2C, it should be understood that other embodiments may include more than two image capture devices. For example, in the embodiments shown in FIGS. 2D and 2E, first, second, and third image capture devices 122, 124, and 126, are included in the system 100 of vehicle 200.

[072] As illustrated in FIG. 2D, image capture device 122 may be positioned in the vicinity of the rearview mirror and/or near the driver of vehicle 200, and image capture devices 124 and 126 may be positioned on or in a bumper region (e.g., one of bumper regions 210) of vehicle 200. And as shown in FIG. 2E, image capture devices 122, 124, and 126 may be positioned in the vicinity of the rearview mirror and/or near the driver seat of vehicle 200. The disclosed embodiments are not limited to any particular number and configuration of the image capture devices, and the image capture devices may be positioned in any appropriate location within and/or on vehicle 200.

[073] It is to be understood that the disclosed embodiments are not limited to vehicles and could be applied in other contexts. It is also to be understood that disclosed embodiments are not limited to a particular type of vehicle 200 and may be applicable to all types of vehicles including automobiles, trucks, trailers, and other types of vehicles.

[074] The first image capture device 122 may include any suitable type of image capture device. Image capture device 122 may include an optical axis. In one instance, the image capture device 122 may include an Aptina M9V024 WVGA sensor with a global shutter. In other embodiments, image capture device 122 may provide a resolution of 1280x960 pixels and may include a rolling shutter. Image capture device 122 may include various optical elements. In some embodiments one or more lenses may be included, for example, to provide a desired focal length and field of view for the image capture device. In some embodiments, image capture device 122 may be associated with a 6mm lens or a 12mm lens. In some embodiments, image capture device 122 may be configured to capture images having a desired field-of-view (FOV) 202, as illustrated in FIG. 2D. For example, image capture device 122 may be configured to have a regular FOV, such as within a range of 40 degrees to 56 degrees, including a 46 degree FOV, 50 degree FOV, 52 degree FOV, or greater. Alternatively, image capture device 122 may be configured to have a narrow FOV in the range of 23 to 40 degrees, such as a 28 degree FOV or 36 degree FOV. In addition, image capture device 122 may be configured to have a wide FOV in the range of 100 to

180 degrees. In some embodiments, image capture device 122 may include a wide angle bumper camera or one with up to a 180 degree FOV.

[075] The first image capture device 122 may acquire a plurality of first images relative to a scene associated with the vehicle 200. Each of the plurality of first images may be acquired as a series of image scan lines, which may be captured using a rolling shutter. Each scan line may include a plurality of pixels.

[076] The first image capture device 122 may have a scan rate associated with acquisition of each of the first series of image scan lines. The scan rate may refer to a rate at which an image sensor can acquire image data associated with each pixel included in a particular scan line.

[077] Image capture devices 122, 124, and 126 may contain any suitable type and number of image sensors, including CCD sensors or CMOS sensors, for example. In one embodiment, a CMOS image sensor may be employed along with a rolling shutter, such that each pixel in a row is read one at a time, and scanning of the rows proceeds on a row-by-row basis until an entire image frame has been captured. In some embodiments, the rows may be captured sequentially from top to bottom relative to the frame.

[078] The use of a rolling shutter may result in pixels in different rows being exposed and captured at different times, which may cause skew and other image artifacts in the captured image frame. On the other hand, when the image capture device 122 is configured to operate with a global or synchronous shutter, all of the pixels may be exposed for the same amount of time and during a common exposure period. As a result, the image data in a frame collected from a system employing a global shutter represents a snapshot of the entire FOV (such as FOV 202) at a particular time. In contrast, in a rolling shutter application, each row in a frame is exposed and data is capture at different times. Thus, moving objects may appear distorted in an image capture device having a rolling shutter. This phenomenon will be described in greater detail below.

[079] The second image capture device 124 and the third image capturing device 126 may be any type of image capture device. Like the first image capture device 122, each of image capture devices 124 and 126 may include an optical axis. In one embodiment, each of image capture devices 124 and 126 may include an Aptina M9V024 WVGA sensor with a global shutter. Alternatively, each of image capture devices 124 and 126 may include a rolling shutter. Like image capture device 122, image capture devices 124 and 126 may be configured to include various lenses and optical elements. In some embodiments, lenses associated with image capture devices 124 and 126 may provide FOVs (such as FOVs 204 and 206) that are the same as, or narrower than, a FOV (such as FOV 202) associated with image capture device 122. For example, image capture devices 124 and 126 may have FOVs of 40 degrees, 30 degrees, 26 degrees, 23 degrees, 20 degrees, or less.

[080] Image capture devices 124 and 126 may acquire a plurality of second and third images relative to a scene associated with the vehicle 200. Each of the plurality of second and third images may be acquired as a second and third series of image scan lines, which may be captured using a rolling shutter. Each scan line or row may have a plurality of pixels. Image capture devices 124 and 126 may

have second and third scan rates associated with acquisition of each of image scan lines included in the second and third series.

[081] Each image capture device 122, 124, and 126 may be positioned at any suitable position and orientation relative to vehicle 200. The relative positioning of the image capture devices 122, 124, and 126 may be selected to aid in fusing together the information acquired from the image capture devices. For example, in some embodiments, a FOV (such as FOV 204) associated with image capture device 124 may overlap partially or fully with a FOV (such as FOV 202) associated with image capture device 122 and a FOV (such as FOV 206) associated with image capture device 126.

[082] Image capture devices 122, 124, and 126 may be located on vehicle 200 at any suitable relative heights. In one instance, there may be a height difference between the image capture devices 122, 124, and 126, which may provide sufficient parallax information to enable stereo analysis. For example, as shown in FIG. 2A, the two image capture devices 122 and 124 are at different heights. There may also be a lateral displacement difference between image capture devices 122, 124, and 126, giving additional parallax information for stereo analysis by processing unit 110, for example. The difference in the lateral displacement may be denoted by d_x, as shown in FIGS. 2C and 2D. In some embodiments, fore or aft displacement (e.g., range displacement) may exist between image capture devices 122, 124, and 126. For example, image capture device 122 may be located 0.5 to 2 meters or more behind image capture device 124 and/or image capture device 126. This type of displacement may enable one of the image capture devices to cover potential blind spots of the other image capture device(s).

[083] Image capture devices 122 may have any suitable resolution capability (e.g., number of pixels associated with the image sensor), and the resolution of the image sensor(s) associated with the image capture device 122 may be higher, lower, or the same as the resolution of the image sensor(s) associated with image capture devices 124 and 126. In some embodiments, the image sensor(s) associated with image capture device 122 and/or image capture devices 124 and 126 may have a resolution of 640 x 480, 1024 x 768, 1280 x 960, or any other suitable resolution.

[084] The frame rate (e.g., the rate at which an image capture device acquires a set of pixel data of one image frame before moving on to capture pixel data associated with the next image frame) may be controllable. The frame rate associated with image capture device 122 may be higher, lower, or the same as the frame rate associated with image capture devices 124 and 126. The frame rate associated with image capture devices 122, 124, and 126 may depend on a variety of factors that may affect the timing of the frame rate. For example, one or more of image capture devices 122, 124, and 126 may include a selectable pixel delay period imposed before or after acquisition of image data associated with one or more pixels of an image sensor in image capture device 122, 124, and/or 126. Generally, image data corresponding to each pixel may be acquired according to a clock rate for the device (e.g., one pixel per clock cycle). Additionally, in embodiments including a rolling shutter, one or more of image capture devices 122, 124, and 126 may include a selectable horizontal blanking period imposed before or after acquisition of image data associated with a row of pixels of an image sensor in image capture device 122, 124, and/or 126. Further, one or more of image capture devices 122, 124, and/or 126 may include a

selectable vertical blanking period imposed before or after acquisition of image data associated with an image frame of image capture device 122, 124, and 126.

[085] These timing controls may enable synchronization of frame rates associated with image capture devices 122, 124, and 126, even where the line scan rates of each are different. Additionally, as will be discussed in greater detail below, these selectable timing controls, among other factors (e.g., image sensor resolution, maximum line scan rates, etc.) may enable synchronization of image capture from an area where the FOV of image capture device 122 overlaps with one or more FOVs of image capture devices 124 and 126, even where the field of view of image capture device 122 is different from the FOVs of image capture devices 124 and 126.

[086] Frame rate timing in image capture device 122, 124, and 126 may depend on the resolution of the associated image sensors. For example, assuming similar line scan rates for both devices, if one device includes an image sensor having a resolution of 640 x 480 and another device includes an image sensor with a resolution of 1280 x 960, then more time will be required to acquire a frame of image data from the sensor having the higher resolution.

[087] Another factor that may affect the timing of image data acquisition in image capture devices 122, 124, and 126 is the maximum line scan rate. For example, acquisition of a row of image data from an image sensor included in image capture device 122, 124, and 126 will require some minimum amount of time. Assuming no pixel delay periods are added, this minimum amount of time for acquisition of a row of image data will be related to the maximum line scan rate for a particular device. Devices that offer higher maximum line scan rates have the potential to provide higher frame rates than devices with lower maximum line scan rates. In some embodiments, one or more of image capture devices 124 and 126 may have a maximum line scan rate that is higher than a maximum line scan rate associated with image capture device 122. In some embodiments, the maximum line scan rate of image capture device 124 and/or 126 may be 1.25, 1.5, 1.75, or 2 times or more than a maximum line scan rate of image capture device 122.

[088] In another embodiment, image capture devices 122, 124, and 126 may have the same maximum line scan rate, but image capture device 122 may be operated at a scan rate less than or equal to its maximum scan rate. The system may be configured such that one or more of image capture devices 124 and 126 operate at a line scan rate that is equal to the line scan rate of image capture device 122. In other instances, the system may be configured such that the line scan rate of image capture device 124 and/or image capture device 126 may be 1.25, 1.5, 1.75, or 2 times or more than the line scan rate of image capture device 122.

[089] In some embodiments, image capture devices 122, 124, and 126 may be asymmetric. That is, they may include cameras having different fields of view (FOV) and focal lengths. The fields of view of image capture devices 122, 124, and 126 may include any desired area relative to an environment of vehicle 200, for example. In some embodiments, one or more of image capture devices 122, 124, and 126 may be configured to acquire image data from an environment in front of vehicle 200, behind vehicle 200, to the sides of vehicle 200, or combinations thereof.

[090] Further, the focal length associated with each image capture device 122, 124, and/or 126 may be selectable (e.g., by inclusion of appropriate lenses etc.) such that each device acquires images of objects at a desired distance range relative to vehicle 200. For example, in some embodiments image capture devices 122, 124, and 126 may acquire images of close-up objects within a few meters from the vehicle. Image capture devices 122, 124, and 126 may also be configured to acquire images of objects at ranges more distant from the vehicle (e.g., 25 m, 50 m, 100 m, 150 m, or more). Further, the focal lengths of image capture devices 122, 124, and 126 may be selected such that one image capture device (e.g., image capture device 122) can acquire images of objects relatively close to the vehicle (e.g., within 10 m or within 20 m) while the other image capture devices (e.g., image capture devices 124 and 126) can acquire images of more distant objects (e.g., greater than 20 m, 50 m, 100 m, 150 m, etc.) from vehicle 200.

[091] According to some embodiments, the FOV of one or more image capture devices 122, 124, and 126 may have a wide angle. For example, it may be advantageous to have a FOV of 140 degrees, especially for image capture devices 122, 124, and 126 that may be used to capture images of the area in the vicinity of vehicle 200. For example, image capture device 122 may be used to capture images of the area to the right or left of vehicle 200 and, in such embodiments, it may be desirable for image capture device 122 to have a wide FOV (e.g., at least 140 degrees).

[092] The field of view associated with each of image capture devices 122, 124, and 126 may depend on the respective focal lengths. For example, as the focal length increases, the corresponding field of view decreases.

[093] Image capture devices 122, 124, and 126 may be configured to have any suitable fields of view. In one particular example, image capture device 122 may have a horizontal FOV of 46 degrees, image capture device 124 may have a horizontal FOV of 23 degrees, and image capture device 126 may have a horizontal FOV in between 23 and 46 degrees. In another instance, image capture device 122 may have a horizontal FOV of 52 degrees, image capture device 124 may have a horizontal FOV of 26 degrees, and image capture device 126 may have a horizontal FOV in between 26 and 52 degrees. In some embodiments, a ratio of the FOV of image capture device 122 to the FOVs of image capture device 124 and/or image capture device 126 may vary from 1.5 to 2.0. In other embodiments, this ratio may vary between 1.25 and 2.25.

[094] System 100 may be configured so that a field of view of image capture device 122 overlaps, at least partially or fully, with a field of view of image capture device 124 and/or image capture device 126. In some embodiments, system 100 may be configured such that the fields of view of image capture devices 124 and 126, for example, fall within (e.g., are narrower than) and share a common center with the field of view of image capture device 122. In other embodiments, the image capture devices 122, 124, and 126 may capture adjacent FOVs or may have partial overlap in their FOVs. In some embodiments, the fields of view of image capture devices 122, 124, and 126 may be aligned such that a center of the narrower FOV image capture devices 124 and/or 126 may be located in a lower half of the field of view of the wider FOV device 122.

[095] FIG. 2F is a diagrammatic representation of exemplary vehicle control systems, consistent with the disclosed embodiments. As indicated in FIG. 2F, vehicle 200 may include throttling system 220, braking system 230, and steering system 240. System 100 may provide inputs (e.g., control signals) to one or more of throttling system 220, braking system 230, and steering system 240 over one or more data links (e.g., any wired and/or wireless link or links for transmitting data). For example, based on analysis of images acquired by image capture devices 122, 124, and/or 126, system 100 may provide control signals to one or more of throttling system 220, braking system 230, and steering system 240 to navigate vehicle 200 (e.g., by causing an acceleration, a turn, a lane shift, etc.). Further, system 100 may receive inputs from one or more of throttling system 220, braking system 230, and steering system 24 indicating operating conditions of vehicle 200 (e.g., speed, whether vehicle 200 is braking and/or turning, etc.). Further details are provided in connection with FIGS. 4-7, below.

[096] As shown in FIG. 3A, vehicle 200 may also include a user interface 170 for interacting with a driver or a passenger of vehicle 200. For example, user interface 170 in a vehicle application may include a touch screen 320, knobs 330, buttons 340, and a microphone 350. A driver or passenger of vehicle 200 may also use handles (e.g., located on or near the steering column of vehicle 200 including, for example, turn signal handles), buttons (e.g., located on the steering wheel of vehicle 200), and the like, to interact with system 100. In some embodiments, microphone 350 may be positioned adjacent to a rearview mirror 310. Similarly, in some embodiments, image capture device 122 may be located near rearview mirror 310. In some embodiments, user interface 170 may also include one or more speakers 360 (e.g., speakers of a vehicle audio system). For example, system 100 may provide various notifications (e.g., alerts) via speakers 360.

[097] FIGS. 3B-3D are illustrations of an exemplary camera mount 370 configured to be positioned behind a rearview mirror (e.g., rearview mirror 310) and against a vehicle windshield, consistent with disclosed embodiments. As shown in FIG. 3B, camera mount 370 may include image capture devices 122, 124, and 126. Image capture devices 124 and 126 may be positioned behind a glare shield 380, which may be flush against the vehicle windshield and include a composition of film and/or anti-reflective materials. For example, glare shield 380 may be positioned such that it aligns against a vehicle windshield having a matching slope. In some embodiments, each of image capture devices 122, 124, and 126 may be positioned behind glare shield 380, as depicted, for example, in FIG. 3D. The disclosed embodiments are not limited to any particular configuration of image capture devices 122, 124, and 126, camera mount 370, and glare shield 380. FIG. 3C is an illustration of camera mount 370 shown in FIG. 3B from a front perspective.

[098] As will be appreciated by a person skilled in the art having the benefit of this disclosure, numerous variations and/or modifications may be made to the foregoing disclosed embodiments. For example, not all components are essential for the operation of system 100. Further, any component may be located in any appropriate part of system 100 and the components may be rearranged into a variety of configurations while providing the functionality of the disclosed embodiments. Therefore, the foregoing configurations are examples and, regardless of the configurations discussed above, system 100 can

provide a wide range of functionality to analyze the surroundings of vehicle 200 and navigate vehicle 200 in response to the analysis.

[099] As discussed below in further detail and consistent with various disclosed embodiments, system 100 may provide a variety of features related to autonomous driving and/or driver assist technology. For example, system 100 may analyze image data, position data (e.g., GPS location information), map data, speed data, and/or data from sensors included in vehicle 200. System 100 may collect the data for analysis from, for example, image acquisition unit 120, position sensor 130, and other sensors. Further, system 100 may analyze the collected data to determine whether or not vehicle 200 should take a certain action, and then automatically take the determined action without human intervention. For example, when vehicle 200 navigates without human intervention, system 100 may automatically control the braking, acceleration, and/or steering of vehicle 200 (e.g., by sending control signals to one or more of throttling system 220, braking system 230, and steering system 240). Further, system 100 may analyze the collected data and issue warnings and/or alerts to vehicle occupants based on the analysis of the collected data. Additional details regarding the various embodiments that are provided by system 100 are provided below.

[0100] Forward-Facing Multi-Imaging System

[0101] As discussed above, system 100 may provide drive assist functionality that uses a multi-camera system. The multi-camera system may use one or more cameras facing in the forward direction of a vehicle. In other embodiments, the multi-camera system may include one or more cameras facing to the side of a vehicle or to the rear of the vehicle. In one embodiment, for example, system 100 may use a two-camera imaging system, where a first camera and a second camera (e.g., image capture devices 122 and 124) may be positioned at the front and/or the sides of a vehicle (e.g., vehicle 200). The first camera may have a field of view that is greater than, less than, or partially overlapping with, the field of view of the second camera. In addition, the first camera may be connected to a first image processor to perform monocular image analysis of images provided by the first camera, and the second camera may be connected to a second image processor to perform monocular image analysis of images provided by the second camera. The outputs (e.g., processed information) of the first and second image processors may be combined. In some embodiments, the second image processor may receive images from both the first camera and second camera to perform stereo analysis. In another embodiment, system 100 may use a three-camera imaging system where each of the cameras has a different field of view. Such a system may, therefore, make decisions based on information derived from objects located at varying distances both forward and to the sides of the vehicle. References to monocular image analysis may refer to instances where image analysis is performed based on images captured from a single point of view (e.g., from a single camera). Stereo image analysis may refer to instances where image analysis is performed based on two or more images captured with one or more variations of an image capture parameter. For example, captured images suitable for performing stereo image analysis may include images captured: from two or more different positions, from different fields of view, using different focal lengths, along with parallax information, etc.

[0102] For example, in one embodiment, system 100 may implement a three camera configuration using image capture devices 122-126. In such a configuration, image capture device 122 may provide a narrow field of view (e.g., 34 degrees, or other values selected from a range of about 20 to 45 degrees, etc.), image capture device 124 may provide a wide field of view (e.g., 150 degrees or other values selected from a range of about 100 to about 180 degrees), and image capture device 126 may provide an intermediate field of view (e.g., 46 degrees or other values selected from a range of about 35 to about 60 degrees). In some embodiments, image capture device 126 may act as a main or primary camera. Image capture devices 122-126 may be positioned behind rearview mirror 310 and positioned substantially side-by-side (e.g., 6 cm apart). Further, in some embodiments, as discussed above, one or more of image capture devices 122-126 may be mounted behind glare shield 380 that is flush with the windshield of vehicle 200. Such shielding may act to minimize the impact of any reflections from inside the car on image capture devices 122-126.

[0103] In another embodiment, as discussed above in connection with FIGS. 3B and 3C, the wide field of view camera (e.g., image capture device 124 in the above example) may be mounted lower than the narrow and main field of view cameras (e.g., image devices 122 and 126 in the above example). This configuration may provide a free line of sight from the wide field of view camera. To reduce reflections, the cameras may be mounted close to the windshield of vehicle 200, and may include polarizers on the cameras to damp reflected light.

[0104] A three camera system may provide certain performance characteristics. For example, some embodiments may include an ability to validate the detection of objects by one camera based on detection results from another camera. In the three camera configuration discussed above, processing unit 110 may include, for example, three processing devices (e.g., three EyeQ series of processor chips, as discussed above), with each processing device dedicated to processing images captured by one or more of image capture devices 122-126.

[0105] In a three camera system, a first processing device may receive images from both the main camera and the narrow field of view camera, and perform vision processing of the narrow FOV camera to, for example, detect other vehicles, pedestrians, lane marks, traffic signs, traffic lights, and other road objects. Further, the first processing device may calculate a disparity of pixels between the images from the main camera and the narrow camera and create a 3D reconstruction of the environment of vehicle 200. The first processing device may then combine the 3D reconstruction with 3D map data or with 3D information calculated based on information from another camera.

[0106] The second processing device may receive images from main camera and perform vision processing to detect other vehicles, pedestrians, lane marks, traffic signs, traffic lights, and other road objects. Additionally, the second processing device may calculate a camera displacement and, based on the displacement, calculate a disparity of pixels between successive images and create a 3D reconstruction of the scene (e.g., a structure from motion). The second processing device may send the structure from motion based 3D reconstruction to the first processing device to be combined with the stereo 3D images.

[0107] The third processing device may receive images from the wide FOV camera and process the images to detect vehicles, pedestrians, lane marks, traffic signs, traffic lights, and other road objects. The third processing device may further execute additional processing instructions to analyze images to identify objects moving in the image, such as vehicles changing lanes, pedestrians, etc.

[0108] In some embodiments, having streams of image-based information captured and processed independently may provide an opportunity for providing redundancy in the system. Such redundancy may include, for example, using a first image capture device and the images processed from that device to validate and/or supplement information obtained by capturing and processing image information from at least a second image capture device.

[0109] In some embodiments, system 100 may use two image capture devices (e.g., image capture devices 122 and 124) in providing navigation assistance for vehicle 200 and use a third image capture device (e.g., image capture device 126) to provide redundancy and validate the analysis of data received from the other two image capture devices. For example, in such a configuration, image capture devices 122 and 124 may provide images for stereo analysis by system 100 for navigating vehicle 200, while image capture device 126 may provide images for monocular analysis by system 100 to provide redundancy and validation of information obtained based on images captured from image capture device 122 and/or image capture device 124. That is, image capture device 126 (and a corresponding processing device) may be considered to provide a redundant sub-system for providing a check on the analysis derived from image capture devices 122 and 124 (e.g., to provide an automatic emergency braking (AEB) system).

[0110] One of skill in the art will recognize that the above camera configurations, camera placements, number of cameras, camera locations, etc., are examples only. These components and others described relative to the overall system may be assembled and used in a variety of different configurations without departing from the scope of the disclosed embodiments. Further details regarding usage of a multi-camera system to provide driver assist and/or autonomous vehicle functionality follow below.

[0111] FIG. 4 is an exemplary functional block diagram of memory 140 and/or 150, which may be stored/programmed with instructions for performing one or more operations consistent with the disclosed embodiments. Although the following refers to memory 140, one of skill in the art will recognize that instructions may be stored in memory 140 and/or 150.

[0112] As shown in FIG. 4, memory 140 may store a monocular image analysis module 402, a stereo image analysis module 404, a velocity and acceleration module 406, and a navigational response module 408. The disclosed embodiments are not limited to any particular configuration of memory 140. Further, application processor 180 and/or image processor 190 may execute the instructions stored in any of modules 402-408 included in memory 140. One of skill in the art will understand that references in the following discussions to processing unit 110 may refer to application processor 180 and image processor 190 individually or collectively. Accordingly, steps of any of the following processes may be performed by one or more processing devices.

[0113] In one embodiment, monocular image analysis module 402 may store instructions (such as computer vision software) which, when executed by processing unit 110, performs monocular image analysis of a set of images acquired by one of image capture devices 122, 124, and 126. In some embodiments, processing unit 110 may combine information from a set of images with additional sensory information (e.g., information from radar) to perform the monocular image analysis. As described in connection with FIGS. 5A-5D below, monocular image analysis module 402 may include instructions for detecting a set of features within the set of images, such as lane markings, vehicles, pedestrians, road signs, highway exit ramps, traffic lights, hazardous objects, and any other feature associated with an environment of a vehicle. Based on the analysis, system 100 (e.g., via processing unit 110) may cause one or more navigational responses in vehicle 200, such as a turn, a lane shift, a change in acceleration, and the like, as discussed below in connection with navigational response module 408.

[0114] In one embodiment, stereo image analysis module 404 may store instructions (such as computer vision software) which, when executed by processing unit 110, performs stereo image analysis of first and second sets of images acquired by a combination of image capture devices selected from any of image capture devices 122, 124, and 126. In some embodiments, processing unit 110 may combine information from the first and second sets of images with additional sensory information (e.g., information from radar) to perform the stereo image analysis. For example, stereo image analysis module 404 may include instructions for performing stereo image analysis based on a first set of images acquired by image capture device 124 and a second set of images acquired by image capture device 126. As described in connection with FIG. 6 below, stereo image analysis module 404 may include instructions for detecting a set of features within the first and second sets of images, such as lane markings, vehicles, pedestrians, road signs, highway exit ramps, traffic lights, hazardous objects, and the like. Based on the analysis, processing unit 110 may cause one or more navigational responses in vehicle 200, such as a turn, a lane shift, a change in acceleration, and the like, as discussed below in connection with navigational response module 408.

[0115] In one embodiment, velocity and acceleration module 406 may store software configured to analyze data received from one or more computing and electromechanical devices in vehicle 200 that are configured to cause a change in velocity and/or acceleration of vehicle 200. For example, processing unit 110 may execute instructions associated with velocity and acceleration module 406 to calculate a target speed for vehicle 200 based on data derived from execution of monocular image analysis module 402 and/or stereo image analysis module 404. Such data may include, for example, a target position, velocity, and/or acceleration, the position and/or speed of vehicle 200 relative to a nearby vehicle, pedestrian, or road object, position information for vehicle 200 relative to lane markings of the road, and the like. In addition, processing unit 110 may calculate a target speed for vehicle 200 based on sensory input (e.g., information from radar) and input from other systems of vehicle 200, such as throttling system 220, braking system 230, and/or steering system 240 of vehicle 200. Based on the calculated target speed, processing unit 110 may transmit electronic signals to throttling system 220, braking system 230, and/or

steering system 240 of vehicle 200 to trigger a change in velocity and/or acceleration by, for example, physically depressing the brake or easing up off the accelerator of vehicle 200.

[0116] In one embodiment, navigational response module 408 may store software executable by processing unit 110 to determine a desired navigational response based on data derived from execution of monocular image analysis module 402 and/or stereo image analysis module 404. Such data may include position and speed information associated with nearby vehicles, pedestrians, and road objects, target position information for vehicle 200, and the like. Additionally, in some embodiments, the navigational response may be based (partially or fully) on map data, a predetermined position of vehicle 200, and/or a relative velocity or a relative acceleration between vehicle 200 and one or more objects detected from execution of monocular image analysis module 402 and/or stereo image analysis module 404. Navigational response module 408 may also determine a desired navigational response based on sensory input (e.g., information from radar) and inputs from other systems of vehicle 200, such as throttling system 220, braking system 230, and steering system 240 of vehicle 200. Based on the desired navigational response, processing unit 110 may transmit electronic signals to throttling system 220, braking system 230, and steering system 240 of vehicle 200 to trigger a desired navigational response by, for example, turning the steering wheel of vehicle 200 to achieve a rotation of a predetermined angle. In some embodiments, processing unit 110 may use the output of navigational response module 408 (e.g., the desired navigational response) as an input to execution of velocity and acceleration module 406 for calculating a change in speed of vehicle 200.

[0117] FIG. 5A is a flowchart showing an exemplary process 500A for causing one or more navigational responses based on monocular image analysis, consistent with disclosed embodiments. At step 510, processing unit 110 may receive a plurality of images via data interface 128 between processing unit 110 and image acquisition unit 120. For instance, a camera included in image acquisition unit 120 (such as image capture device 122 having field of view 202) may capture a plurality of images of an area forward of vehicle 200 (or to the sides or rear of a vehicle, for example) and transmit them over a data connection (e.g., digital, wired, USB, wireless, Bluetooth, etc.) to processing unit 110. Processing unit 110 may execute monocular image analysis module 402 to analyze the plurality of images at step 520, as described in further detail in connection with FIGS. 5B-5D below. By performing the analysis, processing unit 110 may detect a set of features within the set of images, such as lane markings, vehicles, pedestrians, road signs, highway exit ramps, traffic lights, and the like.

[0118] Processing unit 110 may also execute monocular image analysis module 402 to detect various road hazards at step 520, such as, for example, parts of a truck tire, fallen road signs, loose cargo, small animals, and the like. Road hazards may vary in structure, shape, size, and color, which may make detection of such hazards more challenging. In some embodiments, processing unit 110 may execute monocular image analysis module 402 to perform multi-frame analysis on the plurality of images to detect road hazards. For example, processing unit 110 may estimate camera motion between consecutive image frames and calculate the disparities in pixels between the frames to construct a 3D-map of the road.

Processing unit 110 may then use the 3D-map to detect the road surface, as well as hazards existing above the road surface.

[0119] At step 530, processing unit 110 may execute navigational response module 408 to cause one or more navigational responses in vehicle 200 based on the analysis performed at step 520 and the techniques as described above in connection with FIG. 4. Navigational responses may include, for example, a turn, a lane shift, a change in acceleration, and the like. In some embodiments, processing unit 110 may use data derived from execution of velocity and acceleration module 406 to cause the one or more navigational responses. Additionally, multiple navigational responses may occur simultaneously, in sequence, or any combination thereof. For instance, processing unit 110 may cause vehicle 200 to shift one lane over and then accelerate by, for example, sequentially transmitting control signals to steering system 240 and throttling system 220 of vehicle 200. Alternatively, processing unit 110 may cause vehicle 200 to brake while at the same time shifting lanes by, for example, simultaneously transmitting control signals to braking system 230 and steering system 240 of vehicle 200.

[0120] FIG. 5B is a flowchart showing an exemplary process 500B for detecting one or more vehicles and/or pedestrians in a set of images, consistent with disclosed embodiments. Processing unit 110 may execute monocular image analysis module 402 to implement process 500B. At step 540, processing unit 110 may determine a set of candidate objects representing possible vehicles and/or pedestrians. For example, processing unit 110 may scan one or more images, compare the images to one or more predetermined patterns, and identify within each image possible locations that may contain objects of interest (e.g., vehicles, pedestrians, or portions thereof). The predetermined patterns may be designed in such a way to achieve a high rate of "false hits" and a low rate of "misses." For example, processing unit 110 may use a low threshold of similarity to predetermined patterns for identifying candidate objects as possible vehicles or pedestrians. Doing so may allow processing unit 110 to reduce the probability of missing (e.g., not identifying) a candidate object representing a vehicle or pedestrian.

[0121] At step 542, processing unit 110 may filter the set of candidate objects to exclude certain candidates (e.g., irrelevant or less relevant objects) based on classification criteria. Such criteria may be derived from various properties associated with object types stored in a database (e.g., a database stored in memory 140). Properties may include object shape, dimensions, texture, position (e.g., relative to vehicle 200), and the like. Thus, processing unit 110 may use one or more sets of criteria to reject false candidates from the set of candidate objects.

[0122] At step 544, processing unit 110 may analyze multiple frames of images to determine whether objects in the set of candidate objects represent vehicles and/or pedestrians. For example, processing unit 110 may track a detected candidate object across consecutive frames and accumulate frame-by-frame data associated with the detected object (e.g., size, position relative to vehicle 200, etc.). Additionally, processing unit 110 may estimate parameters for the detected object and compare the object's frame-by-frame position data to a predicted position.

[0123] At step 546, processing unit 110 may construct a set of measurements for the detected objects. Such measurements may include, for example, position, velocity, and acceleration values

(relative to vehicle 200) associated with the detected objects. In some embodiments, processing unit 110 may construct the measurements based on estimation techniques using a series of time-based observations such as Kalman filters or linear quadratic estimation (LQE), and/or based on available modeling data for different object types (e.g., cars, trucks, pedestrians, bicycles, road signs, etc.). The Kalman filters may be based on a measurement of an object's scale, where the scale measurement is proportional to a time to collision (e.g., the amount of time for vehicle 200 to reach the object). Thus, by performing steps 540-546, processing unit 110 may identify vehicles and pedestrians appearing within the set of captured images and derive information (e.g., position, speed, size) associated with the vehicles and pedestrians. Based on the identification and the derived information, processing unit 110 may cause one or more navigational responses in vehicle 200, as described in connection with FIG. 5A, above.

[0124] At step 548, processing unit 110 may perform an optical flow analysis of one or more images to reduce the probabilities of detecting a "false hit" and missing a candidate object that represents a vehicle or pedestrian. The optical flow analysis may refer to, for example, analyzing motion patterns relative to vehicle 200 in the one or more images associated with other vehicles and pedestrians, and that are distinct from road surface motion. Processing unit 110 may calculate the motion of candidate objects by observing the different positions of the objects across multiple image frames, which are captured at different times. Processing unit 110 may use the position and time values as inputs into mathematical models for calculating the motion of the candidate objects. Thus, optical flow analysis may provide another method of detecting vehicles and pedestrians that are nearby vehicle 200. Processing unit 110 may perform optical flow analysis in combination with steps 540-546 to provide redundancy for detecting vehicles and pedestrians and increase the reliability of system 100.

[0125] FIG. 5C is a flowchart showing an exemplary process 500C for detecting road marks and/or lane geometry information in a set of images, consistent with disclosed embodiments. Processing unit 110 may execute monocular image analysis module 402 to implement process 500C. At step 550, processing unit 110 may detect a set of objects by scanning one or more images. To detect segments of lane markings, lane geometry information, and other pertinent road marks, processing unit 110 may filter the set of objects to exclude those determined to be irrelevant (e.g., minor potholes, small rocks, etc.). At step 552, processing unit 110 may group together the segments detected in step 550 belonging to the same road mark or lane mark. Based on the grouping, processing unit 110 may develop a model to represent the detected segments, such as a mathematical model.

[0126] At step 554, processing unit 110 may construct a set of measurements associated with the detected segments. In some embodiments, processing unit 110 may create a projection of the detected segments from the image plane onto the real-world plane. The projection may be characterized using a 3rd-degree polynomial having coefficients corresponding to physical properties such as the position, slope, curvature, and curvature derivative of the detected road. In generating the projection, processing unit 110 may take into account changes in the road surface, as well as pitch and roll rates associated with vehicle 200. In addition, processing unit 110 may model the road elevation by analyzing position and

motion cues present on the road surface. Further, processing unit 110 may estimate the pitch and roll rates associated with vehicle 200 by tracking a set of feature points in the one or more images.

[0127] At step 556, processing unit 110 may perform multi-frame analysis by, for example, tracking the detected segments across consecutive image frames and accumulating frame-by-frame data associated with detected segments. As processing unit 110 performs multi-frame analysis, the set of measurements constructed at step 554 may become more reliable and associated with an increasingly higher confidence level. Thus, by performing steps 550-556, processing unit 110 may identify road marks appearing within the set of captured images and derive lane geometry information. Based on the identification and the derived information, processing unit 110 may cause one or more navigational responses in vehicle 200, as described in connection with FIG. 5A, above.

[0128] At step 558, processing unit 110 may consider additional sources of information to further develop a safety model for vehicle 200 in the context of its surroundings. Processing unit 110 may use the safety model to define a context in which system 100 may execute autonomous control of vehicle 200 in a safe manner. To develop the safety model, in some embodiments, processing unit 110 may consider the position and motion of other vehicles, the detected road edges and barriers, and/or general road shape descriptions extracted from map data (such as data from map database 160). By considering additional sources of information, processing unit 110 may provide redundancy for detecting road marks and lane geometry and increase the reliability of system 100.

[0129] FIG. 5D is a flowchart showing an exemplary process 500D for detecting traffic lights in a set of images, consistent with disclosed embodiments. Processing unit 110 may execute monocular image analysis module 402 to implement process 500D. At step 560, processing unit 110 may scan the set of images and identify objects appearing at locations in the images likely to contain traffic lights. For example, processing unit 110 may filter the identified objects to construct a set of candidate objects, excluding those objects unlikely to correspond to traffic lights. The filtering may be done based on various properties associated with traffic lights, such as shape, dimensions, texture, position (e.g., relative to vehicle 200), and the like. Such properties may be based on multiple examples of traffic lights and traffic control signals and stored in a database. In some embodiments, processing unit 110 may perform multi-frame analysis on the set of candidate objects reflecting possible traffic lights. For example, processing unit 110 may track the candidate objects across consecutive image frames, estimate the real-world position of the candidate objects, and filter out those objects that are moving (which are unlikely to be traffic lights). In some embodiments, processing unit 110 may perform color analysis on the candidate objects and identify the relative position of the detected colors appearing inside possible traffic lights.

[0130] At step 562, processing unit 110 may analyze the geometry of a junction. The analysis may be based on any combination of: (i) the number of lanes detected on either side of vehicle 200, (ii) markings (such as arrow marks) detected on the road, and (iii) descriptions of the junction extracted from map data (such as data from map database 160). Processing unit 110 may conduct the analysis using information derived from execution of monocular analysis module 402. In addition, Processing unit 110

may determine a correspondence between the traffic lights detected at step 560 and the lanes appearing near vehicle 200.

[0131] As vehicle 200 approaches the junction, at step 564, processing unit 110 may update the confidence level associated with the analyzed junction geometry and the detected traffic lights. For instance, the number of traffic lights estimated to appear at the junction as compared with the number actually appearing at the junction may impact the confidence level. Thus, based on the confidence level, processing unit 110 may delegate control to the driver of vehicle 200 in order to improve safety conditions. By performing steps 560-564, processing unit 110 may identify traffic lights appearing within the set of captured images and analyze junction geometry information. Based on the identification and the analysis, processing unit 110 may cause one or more navigational responses in vehicle 200, as described in connection with FIG. 5A, above.

[0132] FIG. 5E is a flowchart showing an exemplary process 500E for causing one or more navigational responses in vehicle 200 based on a vehicle path, consistent with the disclosed embodiments. At step 570, processing unit 110 may construct an initial vehicle path associated with vehicle 200. The vehicle path may be represented using a set of points expressed in coordinates (x, z), and the distance d_i between two points in the set of points may fall in the range of 1 to 5 meters. In one embodiment, processing unit 110 may construct the initial vehicle path using two polynomials, such as left and right road polynomials. Processing unit 110 may calculate the geometric midpoint between the two polynomials and offset each point included in the resultant vehicle path by a predetermined offset (e.g., a smart lane offset), if any (an offset of zero may correspond to travel in the middle of a lane). The offset may be in a direction perpendicular to a segment between any two points in the vehicle path. In another embodiment, processing unit 110 may use one polynomial and an estimated lane width to offset each point of the vehicle path by half the estimated lane width plus a predetermined offset (e.g., a smart lane offset).

[0133] At step 572, processing unit 110 may update the vehicle path constructed at step 570. Processing unit 110 may reconstruct the vehicle path constructed at step 570 using a higher resolution, such that the distance d_k between two points in the set of points representing the vehicle path is less than the distance d_i described above. For example, the distance d_k may fall in the range of 0.1 to 0.3 meters. Processing unit 110 may reconstruct the vehicle path using a parabolic spline algorithm, which may yield a cumulative distance vector S corresponding to the total length of the vehicle path (i.e., based on the set of points representing the vehicle path).

[0134] At step 574, processing unit 110 may determine a look-ahead point (expressed in coordinates as (x_l, z_l)) based on the updated vehicle path constructed at step 572. Processing unit 110 may extract the look-ahead point from the cumulative distance vector S, and the look-ahead point may be associated with a look-ahead distance and look-ahead time. The look-ahead distance, which may have a lower bound ranging from 10 to 20 meters, may be calculated as the product of the speed of vehicle 200 and the look-ahead time. For example, as the speed of vehicle 200 decreases, the look-ahead distance may also decrease (e.g., until it reaches the lower bound). The look-ahead time, which may range from 0.5 to

1.5 seconds, may be inversely proportional to the gain of one or more control loops associated with causing a navigational response in vehicle 200, such as the heading error tracking control loop. For example, the gain of the heading error tracking control loop may depend on the bandwidth of a yaw rate loop, a steering actuator loop, car lateral dynamics, and the like. Thus, the higher the gain of the heading error tracking control loop, the lower the look-ahead time.

[0135] At step 576, processing unit 110 may determine a heading error and yaw rate command based on the look-ahead point determined at step 574. Processing unit 110 may determine the heading error by calculating the arctangent of the look-ahead point, e.g., arctan (x_l / z_l). Processing unit 110 may determine the yaw rate command as the product of the heading error and a high-level control gain. The high-level control gain may be equal to: (2 / look-ahead time), if the look-ahead distance is not at the lower bound. Otherwise, the high-level control gain may be equal to: (2 * speed of vehicle 200 / look-ahead distance).

[0136] FIG. 5F is a flowchart showing an exemplary process 500F for determining whether a leading vehicle is changing lanes, consistent with the disclosed embodiments. At step 580, processing unit 110 may determine navigation information associated with a leading vehicle (e.g., a vehicle traveling ahead of vehicle 200). For example, processing unit 110 may determine the position, velocity (e.g., direction and speed), and/or acceleration of the leading vehicle, using the techniques described in connection with FIGS. 5A and 5B, above. Processing unit 110 may also determine one or more road polynomials, a look-ahead point (associated with vehicle 200), and/or a snail trail (e.g., a set of points describing a path taken by the leading vehicle), using the techniques described in connection with FIG. 5E, above.

[0137] At step 582, processing unit 110 may analyze the navigation information determined at step 580. In one embodiment, processing unit 110 may calculate the distance between a snail trail and a road polynomial (e.g., along the trail). If the variance of this distance along the trail exceeds a predetermined threshold (for example, 0.1 to 0.2 meters on a straight road, 0.3 to 0.4 meters on a moderately curvy road, and 0.5 to 0.6 meters on a road with sharp curves), processing unit 110 may determine that the leading vehicle is likely changing lanes. In the case where multiple vehicles are detected traveling ahead of vehicle 200, processing unit 110 may compare the snail trails associated with each vehicle. Based on the comparison, processing unit 110 may determine that a vehicle whose snail trail does not match with the snail trails of the other vehicles is likely changing lanes. Processing unit 110 may additionally compare the curvature of the snail trail (associated with the leading vehicle) with the expected curvature of the road segment in which the leading vehicle is traveling. The expected curvature may be extracted from map data (e.g., data from map database 160), from road polynomials, from other vehicles' snail trails, from prior knowledge about the road, and the like. If the difference in curvature of the snail trail and the expected curvature of the road segment exceeds a predetermined threshold, processing unit 110 may determine that the leading vehicle is likely changing lanes.

[0138] In another embodiment, processing unit 110 may compare the leading vehicle's instantaneous position with the look-ahead point (associated with vehicle 200) over a specific period of

time (e.g., 0.5 to 1.5 seconds). If the distance between the leading vehicle's instantaneous position and the look-ahead point varies during the specific period of time, and the cumulative sum of variation exceeds a predetermined threshold (for example, 0.3 to 0.4 meters on a straight road, 0.7 to 0.8 meters on a moderately curvy road, and 1.3 to 1.7 meters on a road with sharp curves), processing unit 110 may determine that the leading vehicle is likely changing lanes. In another embodiment, processing unit 110 may analyze the geometry of the snail trail by comparing the lateral distance traveled along the trail with the expected curvature of the snail trail. The expected radius of curvature may be determined according to the calculation: $(\delta_z^2 + \delta_x^2) / 2 / (\delta_x)$, where δ_x represents the lateral distance traveled and δ_z represents the longitudinal distance traveled. If the difference between the lateral distance traveled and the expected curvature exceeds a predetermined threshold (e.g., 500 to 700 meters), processing unit 110 may determine that the leading vehicle is likely changing lanes. In another embodiment, processing unit 110 may analyze the position of the leading vehicle. If the position of the leading vehicle obscures a road polynomial (e.g., the leading vehicle is overlaid on top of the road polynomial), then processing unit 110 may determine that the leading vehicle is likely changing lanes. In the case where the position of the leading vehicle is such that, another vehicle is detected ahead of the leading vehicle and the snail trails of the two vehicles are not parallel, processing unit 110 may determine that the (closer) leading vehicle is likely changing lanes.

[0139] At step 584, processing unit 110 may determine whether or not leading vehicle 200 is changing lanes based on the analysis performed at step 582. For example, processing unit 110 may make the determination based on a weighted average of the individual analyses performed at step 582. Under such a scheme, for example, a decision by processing unit 110 that the leading vehicle is likely changing lanes based on a particular type of analysis may be assigned a value of "1" (and "0" to represent a determination that the leading vehicle is not likely changing lanes). Different analyses performed at step 582 may be assigned different weights, and the disclosed embodiments are not limited to any particular combination of analyses and weights.

[0140] FIG. 6 is a flowchart showing an exemplary process 600 for causing one or more navigational responses based on stereo image analysis, consistent with disclosed embodiments. At step 610, processing unit 110 may receive a first and second plurality of images via data interface 128. For example, cameras included in image acquisition unit 120 (such as image capture devices 122 and 124 having fields of view 202 and 204) may capture a first and second plurality of images of an area forward of vehicle 200 and transmit them over a digital connection (e.g., USB, wireless, Bluetooth, etc.) to processing unit 110. In some embodiments, processing unit 110 may receive the first and second plurality of images via two or more data interfaces. The disclosed embodiments are not limited to any particular data interface configurations or protocols.

[0141] At step 620, processing unit 110 may execute stereo image analysis module 404 to perform stereo image analysis of the first and second plurality of images to create a 3D map of the road in front of the vehicle and detect features within the images, such as lane markings, vehicles, pedestrians, road signs, highway exit ramps, traffic lights, road hazards, and the like. Stereo image analysis may be

performed in a manner similar to the steps described in connection with FIGS. 5A-5D, above. For example, processing unit 110 may execute stereo image analysis module 404 to detect candidate objects (e.g., vehicles, pedestrians, road marks, traffic lights, road hazards, etc.) within the first and second plurality of images, filter out a subset of the candidate objects based on various criteria, and perform multi-frame analysis, construct measurements, and determine a confidence level for the remaining candidate objects. In performing the steps above, processing unit 110 may consider information from both the first and second plurality of images, rather than information from one set of images alone. For example, processing unit 110 may analyze the differences in pixel-level data (or other data subsets from among the two streams of captured images) for a candidate object appearing in both the first and second plurality of images. As another example, processing unit 110 may estimate a position and/or velocity of a candidate object (e.g., relative to vehicle 200) by observing that the object appears in one of the plurality of images but not the other or relative to other differences that may exist relative to objects appearing if the two image streams. For example, position, velocity, and/or acceleration relative to vehicle 200 may be determined based on trajectories, positions, movement characteristics, etc. of features associated with an object appearing in one or both of the image streams.

[0142] At step 630, processing unit 110 may execute navigational response module 408 to cause one or more navigational responses in vehicle 200 based on the analysis performed at step 620 and the techniques as described above in connection with FIG. 4. Navigational responses may include, for example, a turn, a lane shift, a change in acceleration, a change in velocity, braking, and the like. In some embodiments, processing unit 110 may use data derived from execution of velocity and acceleration module 406 to cause the one or more navigational responses. Additionally, multiple navigational responses may occur simultaneously, in sequence, or any combination thereof.

[0143] FIG. 7 is a flowchart showing an exemplary process 700 for causing one or more navigational responses based on an analysis of three sets of images, consistent with disclosed embodiments. At step 710, processing unit 110 may receive a first, second, and third plurality of images via data interface 128. For instance, cameras included in image acquisition unit 120 (such as image capture devices 122, 124, and 126 having fields of view 202, 204, and 206) may capture a first, second, and third plurality of images of an area forward and/or to the side of vehicle 200 and transmit them over a digital connection (e.g., USB, wireless, Bluetooth, etc.) to processing unit 110. In some embodiments, processing unit 110 may receive the first, second, and third plurality of images via three or more data interfaces. For example, each of image capture devices 122, 124, 126 may have an associated data interface for communicating data to processing unit 110. The disclosed embodiments are not limited to any particular data interface configurations or protocols.

[0144] At step 720, processing unit 110 may analyze the first, second, and third plurality of images to detect features within the images, such as lane markings, vehicles, pedestrians, road signs, highway exit ramps, traffic lights, road hazards, and the like. The analysis may be performed in a manner similar to the steps described in connection with FIGS. 5A-5D and 6, above. For instance, processing unit 110 may perform monocular image analysis (e.g., via execution of monocular image analysis module 402

and based on the steps described in connection with FIGS. 5A-5D, above) on each of the first, second, and third plurality of images. Alternatively, processing unit 110 may perform stereo image analysis (e.g., via execution of stereo image analysis module 404 and based on the steps described in connection with FIG. 6, above) on the first and second plurality of images, the second and third plurality of images, and/or the first and third plurality of images. The processed information corresponding to the analysis of the first, second, and/or third plurality of images may be combined. In some embodiments, processing unit 110 may perform a combination of monocular and stereo image analyses. For example, processing unit 110 may perform monocular image analysis (e.g., via execution of monocular image analysis module 402) on the first plurality of images and stereo image analysis (e.g., via execution of stereo image analysis module 404) on the second and third plurality of images. The configuration of image capture devices 122, 124, and 126—including their respective locations and fields of view 202, 204, and 206—may influence the types of analyses conducted on the first, second, and third plurality of images. The disclosed embodiments are not limited to a particular configuration of image capture devices 122, 124, and 126, or the types of analyses conducted on the first, second, and third plurality of images.

[0145] In some embodiments, processing unit 110 may perform testing on system 100 based on the images acquired and analyzed at steps 710 and 720. Such testing may provide an indicator of the overall performance of system 100 for certain configurations of image capture devices 122, 124, and 126. For example, processing unit 110 may determine the proportion of "false hits" (e.g., cases where system 100 incorrectly determined the presence of a vehicle or pedestrian) and "misses."

[0146] At step 730, processing unit 110 may cause one or more navigational responses in vehicle 200 based on information derived from two of the first, second, and third plurality of images. Selection of two of the first, second, and third plurality of images may depend on various factors, such as, for example, the number, types, and sizes of objects detected in each of the plurality of images. Processing unit 110 may also make the selection based on image quality and resolution, the effective field of view reflected in the images, the number of captured frames, the extent to which one or more objects of interest actually appear in the frames (e.g., the percentage of frames in which an object appears, the proportion of the object that appears in each such frame, etc.), and the like.

[0147] In some embodiments, processing unit 110 may select information derived from two of the first, second, and third plurality of images by determining the extent to which information derived from one image source is consistent with information derived from other image sources. For example, processing unit 110 may combine the processed information derived from each of image capture devices 122, 124, and 126 (whether by monocular analysis, stereo analysis, or any combination of the two) and determine visual indicators (e.g., lane markings, a detected vehicle and its location and/or path, a detected traffic light, etc.) that are consistent across the images captured from each of image capture devices 122, 124, and 126. Processing unit 110 may also exclude information that is inconsistent across the captured images (e.g., a vehicle changing lanes, a lane model indicating a vehicle that is too close to vehicle 200, etc.). Thus, processing unit 110 may select information derived from two of the first, second, and third plurality of images based on the determinations of consistent and inconsistent information.

[0148] Navigational responses may include, for example, a turn, a lane shift, a change in acceleration, and the like. Processing unit 110 may cause the one or more navigational responses based on the analysis performed at step 720 and the techniques as described above in connection with FIG. 4. Processing unit 110 may also use data derived from execution of velocity and acceleration module 406 to cause the one or more navigational responses. In some embodiments, processing unit 110 may cause the one or more navigational responses based on a relative position, relative velocity, and/or relative acceleration between vehicle 200 and an object detected within any of the first, second, and third plurality of images. Multiple navigational responses may occur simultaneously, in sequence, or any combination thereof.

[0149] Object Detecting System

[0150] In some embodiments, vehicle 200 may include an object detecting system configured to detect an object in front of vehicle 200 and in some circumstances, cause vehicle 200 to brake, e.g., using braking system 230, based on the detection of the object. For example, the object detecting system may cause vehicle 200 to brake automatically, or autonomously, without or with limited driver intervention. The automatic or autonomous object detecting and braking system may or may not allow a driver to intervene to take over control of braking system 230.

[0151] The object detecting system may include a plurality of other systems discussed above. For example, the object detecting and braking system may include system 100, braking system 230, and one or more of image capture devices 122, 124, and 126. The one or more of image capture devices 122, 124, and 126 may acquire one or more images of an environment or an area in front of vehicle 200, which may include an object, such as another vehicle, a pedestrian, etc. Processing unit 110 may compare at least two images to obtain optical flow information, which may include a vector field formed by a plurality of vectors (e.g., displacement vectors) each representing a displacement between a first pixel in the first image and a corresponding second pixel in the second image. Based on the optical flow information, processing unit 110 may detect an object, such as an upright object in the images, and may verify the structure of the object. The upright object may have a low (e.g., short) time to collision with vehicle 200. Thus, the upright object may also be referred to as a low time-to-collision upright object. In some embodiments, processing unit may search for a region of coherent expansion that is a set of pixels in, e.g., the first image, for which there exists a common focus of expansion and a common scale magnitude such that the set of pixels satisfy a relationship between pixel positions, displacement vectors, the common focus of expansion, and the common scale magnitude. The region of coherent expansion may represent a low time-to-collision upright object. The scale magnitude may be defined as a magnitude of a displacement vector associated with the pixel (if denoted as d) divided by a distance (if denoted as r) from the pixel to the focus of expansion, i.e., scale magnitude = d/r. The scale magnitude may also be referred to as the expansion rate.

[0152] In some embodiments, processing unit 110 may calculate a plurality of combinations of possible scale magnitudes and possible focus of expansions for a plurality of pixels from at least one of the first image and the second image. The plurality of pixels may include the set of pixels to be searched

for. In some embodiments, processing unit 110 may determine the common focus of expansion and the common scale magnitude based on a distribution of the plurality of combinations of possible scale magnitudes and possible focus of expansions. The plurality of combinations of possible scale magnitudes and possible focus of expansions may be distributed in a three-dimensional space. In some embodiments, processing unit 110 may determine the common focus of expansion and common scale magnitude using a suitable clustering technique, such as one that may determine the center of mass (e.g., center of density) about the distribution. Processing unit 110 may determine from the distribution that the density of distribution around a particular pair of scale magnitude and focus of expansion is higher than a predetermined threshold, and may select that particular pair of scale magnitude and focus of expansion as the common scale magnitude and common focus of expansion.

[0153] Processing unit 110 may select the region of coherent expansion (i.e., the set of pixels) based on the common focus of expansion and common scale magnitude, wherein the set of pixels satisfy the relationship between pixel positions, displacement vectors, the common focus of expansion, and the common scale magnitude. The set of pixels may be selected from the first image or the second image. Based on the selected set of pixels (or the region of coherent expansion), processing unit 110 may identify the presence of a substantially upright low time-to-collision object in the first image (or the second image). For example, the set of pixels may show a portion of the substantially upright low time-to-collision object. Processing unit 110 may identify such a low time-to-collision upright object regardless of whether the object is static relative to the road, and/or regardless of the moving direction of the object, and/or regardless of whether the object has a low (e.g., short) time to collision with vehicle 200, as long as the object has a relative speed as compared to vehicle 200 such that there exists a focus of expansion for the object. The focus of expansion may not exist for the object when the object appears static in an image plane relative to vehicle 200 because there would be no expansion or shrinking in the optical flow field.

[0154] Processing unit 110 may further determine that the identified object is a crossing object (which may also be referred to as a crossing-to-impact object hereinafter) that is moving at a constant speed in a direction crossing the travel direction of vehicle 200, and which would likely collide with vehicle 200 should vehicle 200 and the crossing object continue to move at their respective constant speeds. The crossing object may be a low time-to-collision upright object. Processing unit 110 may determine whether a horizontal coordinate of the focus of expansion of the crossing object stays around a center in the horizontal dimension of the crossing object during a period of time. This may indicate that a viewing angle from a camera installed on vehicle 200 is constant. When a viewing angle is constant, if the crossing object moves linearly at a constant speed, and vehicle 200 moves linearly at a constant speed, they may collide at certain point. Thus, processing unit 110 may determine whether crossing object and vehicle 200 may collide based on a determination of whether the horizontal coordinate of the focus of expansion of the crossing object stays around a center in the horizontal dimension of the crossing object during the period of time. When processing unit 110 determines that the horizontal coordinate of the focus of expansion of the crossing object stays around a center in the horizontal dimension of the crossing

object during the period of time, processing unit may cause vehicle 200 to brake using, e.g., braking system 230. In some embodiments, the braking may be autonomous without driver intervention.

[0155] FIG. 8 is a diagrammatic representation of an exemplary vehicle 200 including an object detecting system (or referred to as an emergency braking decisioning system). The object detecting system may include system 100 and braking system 230. The object detecting system may also include at least one of image capture devices 122 and 124 (and 126, which is not shown in FIG. 8). The object detecting system may include processing unit 110, which may be part of system 100. At least one of image capture devices 122 and 124 may acquire one or a plurality of images of an area including an object in front of vehicle 200. The object may be another vehicle, such as a vehicle 800 that may be traveling in front of vehicle 200, or a pedestrian, an animal, etc. As shown in FIG. 8, in some embodiments, vehicle 800 may be traveling in a direction that is parallel to a traveling direction of vehicle 200. A parallel direction may include a situation in which vehicle 800 is traveling in the same direction as and in alignment or substantially in alignment with vehicle 200 (e.g., vehicle 800 traveling in front of vehicle 200), as shown in FIG. 8. A parallel direction may also include a situation in which vehicle 800 is traveling in an opposite direction relative to vehicle 200 and in alignment with vehicle 200 (e.g., vehicle 800 moving toward vehicle 200 in a direction that is 180 degrees, or substantially 180 degrees, opposite to the traveling direction of vehicle 200). A parallel direction may also include a situation in which vehicle 800 is not traveling in alignment with vehicle 200, but is traveling in a direction parallel to the traveling direction of vehicle 200 (e.g., vehicle 800 traveling on a front side of vehicle 200 at an offset distance).

[0156] In some embodiments, the object may be a pedestrian who may be standing in the road, or walking or running across the road in front of vehicle 200. The area included in the images may include other objects, such as a road surface, a house, a wall, a sign, etc., which may form a static environment. When an object is not traveling in a direction parallel to the traveling direction of vehicle 200, the traveling direction of the object may transverse or cross the traveling direction of vehicle 200 with an angle that is neither zero (or substantially zero) nor 180 degrees (or substantially 180 degrees). The images may include both moving and/or static objects.

[0157] Processing unit 110 may communicate with braking system 230 and at least one of image capture devices 122 and 124. For example, processing unit 110 may receive images from at least one of image capture devices 122 and 124, and may process the images using various methods to detect the object (e.g., another vehicle, pedestrian, or animal, etc.). Although two image capture devices 122 and 124 are shown in FIG. 8, the use of additional image capture devices (e.g., 3, 4, 5, etc., image capture devices) is consistent with the disclosed embodiments.

[0158] FIG. 9 is an exemplary block diagram of memory 140 or 150 that may store instructions for performing one or more operations for detecting an object in front of vehicle 200 and/or causing vehicle 200 to brake based on the detection. As shown in FIG. 9, memory 140 or 150 may store one or more modules for performing the operations, as described herein. For example, memory 140 or 150 may store an image analysis module 900 configured to analyze the images. Memory 140 or 150 may store a

braking module 905 configured to cause vehicle 200 to brake by controlling, e.g., braking system 230. Application processor 180 and/or image processor 190 may execute the instructions stored in any of modules 900 and 905 included in memory 140 or 150. One of skill in the art will understand that references in the following discussions to processing unit 110 may refer to application processor 180 and image processor 190 individually or collectively. Accordingly, steps of any of the following processes may be performed by one or more processing devices.

[0159] Image analysis module 900 may store instructions which, when executed by processing unit 110, may perform an image analysis to detect an object traveling in front of vehicle 200 (e.g., vehicle 800 or a pedestrian crossing the road). Image analysis module 900 may analyze at least two images acquired by at least one of image capture devices 122 and 124. For example, image analysis module 900 may compare at least a first image to a second image to obtain optical flow information. The optical flow information may include an optical flow field formed by a plurality of displacement vectors between each first pixel in the first image and each corresponding second pixel in the second image. Image analysis module 900 may search for a region of coherent expansion that is a set of pixels in at least one of the first image and the second image, for which there exists a common focus of expansion and a common scale magnitude such that the set of pixels satisfy a relationship between pixel positions, displacement vectors, the common focus of expansion, and the common scale magnitude. Image analysis module 900 may further identify presence of a substantially upright object in at least one of the first image and the second image based on the set of pixels.

[0160] In some embodiments, image analysis module 900 may store instructions which, when executed by processing unit 110, may perform an image analysis to detect an object crossing the road in front of vehicle 200, which would likely collide with vehicle 200 if vehicle 200 and the object continue to move linearly (e.g., in a straight line) at their respective constant speeds in their respective directions that cross each other at an angle which is neither zero nor 180 degrees. Image analysis module 900 may determine whether a horizontal coordinate of the focus of expansion stays around a center in the horizontal dimension of the crossing object during a period of time.

[0161] Braking module 905 may store instructions which, when executed by processing unit 110, may cause vehicle 200 to brake using braking system 230. For example, when image analysis module 900 determines that a horizontal coordinate of the focus of expansion of the crossing object stays around a center in the horizontal dimension of the crossing object during a period of time, braking module 905 may cause vehicle 200 to brake to avoid collision with the crossing object.

[0162] FIG. 10A is an exemplary image of an area showing vectors associated with pixels. Although only one image of a vehicle 1000 is shown for illustration purposes, it is understood that a plurality of image may be acquired by one of the image capture devices 122-126 at a time interval after the first image is acquired. Processing unit 110 may compare a first image to a second image to obtain optical flow information including a vector field formed by a plurality of vectors, each vector representing displacement (or movement) associated with each first pixel in the first image and each corresponding second pixel in the second image. The vectors may also be referred to as displacement

vectors. In the example displacement vector field shown in FIG. 10A, coordinates of three pixels in the first image are shown, (x1, y1), (x2, y2), and (x3, y3). Displacement vectors are shown as arrows. Coordinates (u1, v1), (u2, v2), and (u3, v3) may represent horizontal and vertical displacements associated with each displacement vector, or may represent coordinates of corresponding second pixels on the second image in some embodiments.

[0163] Processing unit 110 may search for a region of coherent expansion that is a set of pixels in at least one of the first image and the second image, for which there exists a common focus of expansion and a common scale magnitude such that the set of pixels satisfy a relationship between pixel positions, displacement vectors, the common focus of expansion, and the common scale magnitude. The relationship may be expressed as equations (1) and (2) for an ith pixel in the first image (or in the second image) having coordinates (xi, yi), where i is a integer number:

[0164] $SS * (x_i - FOE_x) = u_i$ (1)

[0165] $SS * (y_i - FOE_y) = v_i$ (2)

[0166] Where SS is the scale magnitude, FOE_x and FOE_y are coordinates of the focus of expansion. Because SS, FOE_x, and FOE_y are unknown variables, there may be an infinite number of possible solutions for equations (1) and (2). The possible solutions of equations (1) and (2) may be distributed in a three-dimensional cube space shown in FIG. 10B (which may represent a portion of the infinite space), where the x axis represents FOE_x, and the y-axis represents FOE_y, and the z-axis represents scale magnitude SS. There may exist a set of pixels among the pixels of the first image (or the second image) for which there exists a pair of common scale magnitude SS0 and common focus of expansion (FOE_{x0}, FOE_{y0}) such that all or most of the set of pixels satisfy the relationship represented by equations (1) and (2) with SS being replaced by common scale magnitude SS0 and FOE_x and FOE_y being replaced by FOE_{x0}, FOE_{y0} of the common focus of expansion. This set of pixels may be referred to a region of coherent expansion. The pixels in the region of coherent expansion may share the same common scale magnitude and the same focus of expansion.

[0167] A plurality of methods may be used to determine a common focus of expansion from the plurality of focuses of expansion. For example, a clustering technique may be used to determine the standard deviation of the distribution, the center of mass, or the center of the density of distribution. Such information obtained using the clustering technique may be used to determine the common scale magnitudes, SS0, and the common focus of expansion (FOE_{x0}, FOE_{y0}).

[0168] In one embodiment, the three-dimensional cube space shown in FIG. 10B may be divided into a plurality of cells, each cell corresponding to a small range corresponding to a pair of (SS_i, FOE_{xi}, FOE_{yi}). Processing unit 110 may place the possible solutions into the cells and count the number of solutions within the cells. Processing unit 110 may determine which cell has the largest number of solutions. In one embodiment, the cell has the largest number of solutions may be used to determine the common focus of expansion and the common scale magnitude.

[0169] In another embodiment, processing unit 110 may one variable, such as one of the scale magnitude SS, FOE_x, or FOE_y, and solve the equations (1) and (2) for possible solutions for each pixel.

Processing unit 110 may repeat this for all or a plurality of pixels in the first image to generate a plurality of possible solutions. The plurality of possible solutions (SS, FOE_x, FOE_y) may be arranged into a list or an array. Processing unit 110 may determine a distribution of the possible solutions using, e.g., a clustering technique, to find a dense clustering. For example, if the density around a particular solution (SS, FOE_x, FOE_y) is higher than a predetermined threshold, processing unit 110 may use that particular solution as the common focus of expansion and common scale magnitude for the plurality of pixels in the first image.

[0170] In some embodiments, processing unit 110 may determine whether the possible solutions "agree" with each other, e.g., whether all or most of the solutions or more than a predetermined number of solutions are located within a predetermined small space in the three-dimensional cube space shown in FIG. 10B. If the possible solutions "agree" with each other, processing unit 110 may determine the common focus of expansion and the commons scale magnitude based on the possible solutions within the predetermined space (e.g., taking the average of the all solutions within the predetermined space as the common scale magnitude and the common focus of expansion).

[0171] Based on the common focus of expansion and the common scale magnitude, processing unit 110 may identify the set of pixels that satisfy the relationship represented by equations (1) and (2) with the common scale magnitude and common focus of expansion. In other words, processing unit 110 may identify the set of pixels that share the common scale magnitude and the common focus of expansion. Processing unit 110 may detect the presence of an object, such as an upright object low time-to-collision object (e.g., a back door of a van shown in FIG. 10C) based on the identified set of pixels. For example, the identified set of pixels may show an image of a substantial portion of the upright object (e.g., the back door of the van), as shown in FIG. 10C.

[0172] FIG. 11 is a flowchart showing an exemplary process for detecting presence of an object in front of vehicle 200. Method 1100 may include acquiring a plurality of images of an area in front of vehicle 200 (step 1110). For example, at least one of image capture devices 122 and 124 may acquire one or more images of an area in front of vehicle 200. The area may include an object, such as another vehicle or a pedestrian. The area may include other static objects, such as a sign, a house, a mountain, a road surface, etc., which may form a static environment.

[0173] Method 1100 may include receiving the plurality of images (step 1120). For example, processing unit 110 may receive the plurality of images from at least one of the image capture devices 122 and 124. Method 1100 may also include comparing a first image to a second image to determine displacement vectors between pixels of the first image and pixels of the second image (step 1130). The first and second images are from the plurality of images, and may be acquired at a predetermined time interval, such as 0.01 second, 0.02 second, etc. Processing unit 110 may compare the first image and second image to obtain optical flow information, which may include displacement vectors between pixels of the first image and pixels of the second image. A displacement vector indicates a direction and a magnitude of displacement between a first pixel in the first image and a second pixel in the second image. The displacement vectors may converge into one or more common converging points, which may also be

referred to as common focus of expansions. Processing unit 110 may determine the common focus of expansion based on any of the methods disclosed herein.

[0174] Method 1100 may further include searching for a region of coherent expansion that is a set of pixels in at least one of the first image and the second image, for which there exists a common focus of expansion and a common scale magnitude such that the set of pixels satisfy a relationship between pixel positions, displacement vectors, the common focus of expansion, and the common scale magnitude (step 1140). For example, processing unit 110 may search for the set of pixels that satisfy the relationship represented by equations (1) and (2) with the common focus of expansion and the common scale magnitude. Based on the set of pixels, processing unit 110 may identify the presence of a substantially upright object in at least one of the first image and the second image (step 1150). The upright object may be low time-to-collision object, such as a moving vehicle or pedestrian with which vehicle 200 may collision at a future time.

[0175] FIG. 12A is an image of a static environment captured by at least one of image capture devices 122 and 124 installed on vehicle 200. The static environment may include a road, one or more trees along the road, and a portion of the sky. FIG. 12B shows a three-dimensional cube space illustrating the relationship between the focus of expansion and the scale magnitude. The cube space shows a space where possible solutions of (SS, FOE_x, FOE_y) may be distributed. As shown in FIG. 12B, distribution of the scale magnitudes and focus of expansions of different objects in the static environment may be represented by a cylindrical shape 1200 (or a straight line; the cylindrical shape is only for illustration purposes). Different objects in the image of the static environment may have different distances to the camera on vehicle 200. Thus, the scale magnitudes may be different for different objects in the image of the static environment. As indicated by the cylindrical shape 1200 in FIG. 12B, objects in the static environment share the same focus of expansion.

[0176] FIG. 13A is an image of a environment having another vehicle 1300 in front of vehicle 200. The object vehicle 1300 may be static relative to the road or may be moving in a direction parallel to the traveling direction of vehicle 200. As shown in FIG. 13B, the distribution of the scale magnitude and focus of expansion of different objects in the static environment may be represented by a cylindrical shape 1310. The focus of expansion of object vehicle 1300 may be represented by the circle 1320 centered on the cylindrical shape 1310 at a certain scale magnitude. In other words, the focus of expansion of object vehicle 1300 is the same as the focus of expansion of the static environment.

[0177] FIG. 13C is an image of a environment having another object vehicle 1350 traveling longitudinally in front of and in alignment with vehicle 200. As shown in FIG. 13D, the distribution of scale magnitudes and focus of expansions for different objects in the static environment may be represented by a cylindrical shape 1360. The focus of expansion of object vehicle 1350 may be represented by a circle 1370 centered on the cylindrical shape 1360 at a certain scale magnitude. In other words, the focus of expansion of object vehicle 1350 is the same as the focus of expansion of the static environment.

[0178] FIG. 14A is an image of an environment superimposed with an exemplary optical flow field (e.g., the displacement vector field). The image of the environment may include an object vehicle 1410 and a pedestrian 1420, who may be crossing the road or standing still on the road. An optical flow field having a plurality of vectors is superimposed to the figure to indicate that an optical flow field may be obtained from at least two images of the environment with object vehicle 1410 and pedestrian 1420 acquired at two different times.

[0179] FIG. 14B is a three-dimensional cube space illustrating two exemplary focus of expansions corresponding to the vehicle object and the pedestrian object shown in FIG. 14A. As shown in FIG. 14B, the distribution of scale magnitude and focus of expansion of different objects in the static environment may be represented by a cylindrical shape 1430. The focus of expansion of object vehicle 1410 may be represented by a circle 1440 centering around the cylindrical shape 1430 at a certain scale magnitude, indicating that the focus of expansion of object vehicle 1410 is the same as the focus of expansion of the static environment. FIG. 14B also shows a focus of expansion of pedestrian 1420, as indicated by the circle 1450. The focus of expansion of pedestrian 1420 may be located offset from the focus of expansion of the static environment and the focus of expansion of object vehicle 1410, which means at least one of the horizontal and the vertical coordinate of focus of expansion of pedestrian 1420 may be different from that of the focus of expansion of the static environment and/or object vehicle 1410. The focus of expansion of pedestrian 1420 may be located on a plane corresponding to a first common scale magnitude, which may be different from a second common scale magnitude corresponding to the focus of expansion of object vehicle 1410.

[0180] In some embodiments, system 100 may detect an object crossing the road in front of vehicle 200, and may cause vehicle 200 to brake to avoid collision. Such an object may be referred to as a crossing object or a crossing-to-impact object, which may have a low time to collision with vehicle 200. The crossing object may likely collide with vehicle 200 if the crossing object and vehicle 200 continue to move in their current linear directions at their current substantially constant speed. FIG. 15A shows a diagram illustrating an exemplary method of detecting a crossing-to-impact object. A crossing object 1500 may travel in a direction that crosses the travel direction of vehicle 200. If crossing object 1500 and vehicle continue to travel at their respective substantially constant speeds, the viewing angle from the camera installed on vehicle 200, α, will remain constant as crossing object 1500 and vehicle 200 travel to point 1510. They may likely collide in a future time at point 1510. System 100 may detect such a cross-to-impact object and may take actions to avoid collision by, for example, braking vehicle 200 before vehicle 200 and crossing object 1500 reach the collision point 1510. Although FIG. 15A shows that crossing object 1500 and vehicle 200 travel in directions that are perpendicular to each other, their directions do not have to be perpendicular. For example, the angle between the direction of travel of crossing object 1500 and vehicle 200 may be any suitable value, such as 60 degrees, 45 degrees, etc.

[0181] In some embodiments, a constant viewing angle may be detected based on the optical flow information. For example, when object 1500 moves with a constant viewing angle, the object may appear fixed horizontally in an image plane and expands in a direction perpendicular to the image plane.

When object 1500 moves with a constant viewing angle, the object 1500 may have a focus of expansion, which may stay around a center in the horizontal dimension of object 1500. Processing unit 110 may use such information to determine whether object 1500 may collide with camera installed on vehicle 200.

[0182] FIG. 15B shows an image having a pedestrian 1520 (an exemplary crossing object) crossing the road in front of vehicle 200. FIG. 15C shows an image having the pedestrian 1520 crossing the road in front of vehicle 200 acquired at a time after the image shown in FIG. 15B is acquired (thus, pedestrian 1520 appears larger in FIG. 15C than in FIG. 15B). A vertical dotted line 1530 in FIG. 15B and FIG. 15C indicates the horizontal coordinate of the focus of expansion of pedestrian 1520. If processing unit 110 detects that the vertical line 1530 stays around a center in the horizontal dimension of pedestrian 1520 and does not move away from the center in the horizontal direction during the period of time from the first image (e.g., FIG. 15B) to the second image (e.g., FIG. 15C), processing unit 110 may determine that a viewing angle from the camera (e.g., one in the image capture device 122, 124, or 126) installed in vehicle 200 is constant. A constant viewing angle may indicate that there is a high likelihood that vehicle 200 and pedestrian 1520 will collide if they continue to move linearly at substantially constant speeds in their respective directions that cross each other. When processing unit 110 determines that the horizontal coordinate of the focus of expansion of pedestrian 1520, as indicated by the vertical line 1530, stays around the center in the horizontal dimension of pedestrian 1520, processing unit 110 may cause vehicle 200 to brake to avoid the collision as vehicle 200 approaches pedestrian 1520. If processing unit 110 detects that the line 1530 does not stay around the center in the horizontal dimension of pedestrian 1520 (e.g., moves away from the center), which may indicate that the viewing angle is not constant, processing unit 110 may not cause vehicle 200 to brake because the likelihood to have a collision may not be high.

[0183] FIG. 16 is a flowchart showing an exemplary process for detecting an object in front of vehicle 200. Method 1600 may include acquiring a plurality of images of an area in front of vehicle 200 (step 1610). For example, at least one of image capture devices 122-126 may capture the plurality of images of the area in front of vehicle 200 at a predetermined interval, such as, for example, 0.01 second, 0.02 second, etc. Method 1600 may also include receiving the plurality of images (step 1620). For example, processing unit 110 may receive the plurality of images from at least one of image capture devices 122-126. Method 1600 may also include comparing a first image to a second image to determine a focus of expansion of a crossing object moving in a direction that crosses a travel direction of the vehicle (step 1630). For example, processing unit 110 may compare the first and second images to obtain optical flow information, which includes displacement vectors relating to each first pixel in the first image and a corresponding second pixel in the second image. Processing unit 110 may determine the focus of expansion based on the optical flow information.

[0184] Method 1600 may also include determine whether a horizontal coordinate of the focus of expansion stays around a center in the horizontal dimension of the crossing object during a period of time (step 1640). Processing unit 110 may compare the horizontal coordinate of the focus of expansion of the crossing object with the horizontal center (i.e., horizontal coordinate) of the crossing object in the image,

and determine whether they are the same or substantially the same (e.g., within a small error, such as one or two pixels). When processing unit 110 determines that the horizontal coordinate stays around the center in the horizontal dimension of the crossing object during the period of time (Yes, step 1640), processing unit 110 may cause vehicle 200 to brake using, e.g., braking system 230, to avoid collision with the crossing object (step 1650). When processing unit 110 determines that the horizontal coordinate does not stay within the crossing object during the period of time (No, step 1640), processing unit 110 may executes steps 1610-1630.

[0185] The situation shown in FIG. 15A assumes that vehicle 200 and crossing object 1500 may be represented by points. In reality, when camera is installed on vehicle 200, which may not be treated as a point, the method discussed above for detecting a crossing-to-impact object may be generalized to take into account the sizes of vehicle 200 and the crossing object 1500. The generalized method may provide a visual indication of potential collision with a target object. For example, an image space of a target object may be extrapolated using any suitable extrapolation method to predict a future location of that target object in an image space, in a future time, relative to vehicle 200, thereby showing a boundary for avoiding collision with the target object.

[0186] As shown in FIG. 17, as vehicle 200 drives along the road where object vehicles 1710, 1720, 1730 are parked, images of vehicles 1710, 1720, 1730 may be extrapolated in time to predict the future position of vehicles 1710, 1720, and 1730 relative to vehicle 200 in the image space. For example, an image of a portion of vehicle 1710 within a box 1750 may be extrapolated in time to produce a predicted relative position of vehicle 1710, as indicated by box 1760. Similar extrapolation may be performed based on images of vehicles 1720 and 1730. Lines 1770 and 1780 may be superimposed on the real-time image captured by one of the image capture devices 122-126 to show the predicted boundary for avoiding potential collision with parked vehicles 1710-1730. To further assist the driver to prevent collision, in some embodiments, one or more lines 1740 representing a position of the front bumper of vehicle 200 may be superimposed in the live, real-time image. Thus, when lines 1740 representing the front bumper do not touch the boundary lines 1770 and/or 1780, it provides an indication to the driver that vehicle 200 is at a safe distance from vehicles 1710-1730 to avoid collision. If lines 1740 touch the boundary lines 1770 and/or 1780, it may indicate that vehicle 200 has a potential to collide with at least one of parked vehicle 1710, 1720, or 1730, and system 100 may provide a visual and/or audio warning to the driver.

[0187] The foregoing description has been presented for purposes of illustration. It is not exhaustive and is not limited to the precise forms or embodiments disclosed. Modifications and adaptations will be apparent to those skilled in the art from consideration of the specification and practice of the disclosed embodiments. Additionally, although aspects of the disclosed embodiments are described as being stored in memory, one skilled in the art will appreciate that these aspects can also be stored on other types of computer readable media, such as secondary storage devices, for example, hard disks or CD ROM, or other forms of RAM or ROM, USB media, DVD, Blu-ray, or other optical drive media.

[0188] Computer programs based on the written description and disclosed methods are within the skill of an experienced developer. The various programs or program modules can be created using any of the techniques known to one skilled in the art or can be designed in connection with existing software. For example, program sections or program modules can be designed in or by means of .Net Framework, .Net Compact Framework (and related languages, such as Visual Basic, C, etc.), Java, C++, Objective-C, HTML, HTML/AJAX combinations, XML, or HTML with included Java applets.

[0189] Moreover, while illustrative embodiments have been described herein, the scope of any and all embodiments having equivalent elements, modifications, omissions, combinations (e.g., of aspects across various embodiments), adaptations and/or alterations as would be appreciated by those skilled in the art based on the present disclosure. The limitations in the claims are to be interpreted broadly based on the language employed in the claims and not limited to examples described in the present specification or during the prosecution of the application. The examples are to be construed as non-exclusive. Furthermore, the steps of the disclosed methods may be modified in any manner, including by reordering steps and/or inserting or deleting steps. It is intended, therefore, that the specification and examples be considered as illustrative only, with a true scope and spirit being indicated by the following claims and their full scope of equivalents.

WHAT IS CLAIMED IS:

1. An object detecting system for a vehicle, comprising:

at least one image capture device configured to acquire a plurality of images of an area in front of the vehicle;

a data interface; and

at least one processing device programmed to:

receive the plurality of images via the data interface;

compare a first image to a second image to determine displacement vectors between pixels of the first image and pixels of the second image;

search for a region of coherent expansion that is a set of pixels in at least one of the first image and the second image, for which there exists a common focus of expansion and a common scale magnitude such that the set of pixels satisfy a relationship between pixel positions, displacement vectors, the common focus of expansion, and the common scale magnitude; and

identify presence of a substantially upright object in at least one of the first image and the second image based on the set of pixels.

2. The object detecting system of claim 1, wherein the region of coherent expansion represents a substantially upright object that has a low time to collision with the vehicle.

3. The object detecting system of claim 1, wherein the common focus of expansion represents a converging point for a plurality of displacement vectors associated with the set of pixels.

4. The object detecting system of claim 3, wherein the scale magnitude associated with a pixel in the first image is defined as a magnitude of a displacement vector associated with the pixel divided by a distance from the pixel to the focus of expansion.

5. The object detecting system of claim 4, wherein the at least one processing device is further programmed to:

calculate a plurality of combinations of scale magnitudes and focus of expansions for a plurality of pixels from at least one of the first image and the second image, the plurality of pixels include the set of pixels; and

determine the common focus of expansion and the common scale magnitude based on a distribution of the plurality of combinations of scale magnitudes and focus of expansions.

6. The object detecting system of claim 5, wherein determining the common focus of expansion and the common scale magnitude based on the distribution of the plurality of focuses of expansion includes:

determining the common focus of expansion and the common scale magnitude by determining that a density of distribution around the pair of common focus of expansion and the common scale magnitude is higher than a predetermined threshold.

7. A vehicle, comprising:

a body;

at least one image capture device configured to acquire a plurality of images of an area in front of the vehicle;

a data interface; and

at least one processing device programmed to:

receive the plurality of images via the data interface;

compare a first image to a second image to determine displacement vectors between pixels of the first image and pixels of the second image;

search for a region of coherent expansion that is a set of pixels in at least one of the first image and the second image, for which there exists a common focus of expansion and a common scale magnitude such that the set of pixels satisfy a relationship between pixel positions, displacement vectors, the common focus of expansion, and the common scale magnitude; and

identify presence of a substantially upright object in at least one of the first image and the second image based on the set of pixels.

8. A method for detecting an object in front of a vehicle, comprising:

acquiring, via at least one image capture device, a plurality of images of an area in front of the vehicle;

receiving, via a processing device, the plurality of images;

comparing, via the processing device, a first image to a second image to determine displacement vectors between pixels of the first image and pixels of the second image;

searching for, via the processing device, a region of coherent expansion that is a set of pixels in at least one of the first image and the second image, for which there exists a common focus of expansion and a common scale magnitude such that the set of pixels satisfy a relationship between pixel positions, displacement vectors, the common focus of expansion, and the common scale magnitude; and

identifying, via the processing device, presence of a substantially upright object in at least one of the first image and the second image based on the set of pixels.

9. The method of claim 8, further comprising:

calculating a plurality of combinations of scale magnitudes and focus of expansions for a plurality of pixels from at least one of the first image and the second image, the plurality of pixels include the set of pixels; and

determining the common focus of expansion and the common scale magnitude based on a distribution of the plurality of combinations of scale magnitudes and focus of expansions.

10. The method of claim 8, wherein determining the common focus of expansion and the common scale magnitude based on the distribution of the plurality of focuses of expansion includes:

determining the common focus of expansion and the common scale magnitude by determining that a density of distribution around the pair of common focus of expansion and the common scale magnitude is higher than a predetermined threshold.

11. An object detecting system for a vehicle, comprising:

at least one image capture device configured to acquire a plurality of images of an area in front of the vehicle;

a data interface; and

at least one processing device programmed to:

receive the plurality of images via the data interface;

compare a first image to a second image, and based on the comparison, determine a focus of expansion of a crossing object moving in a direction that crosses a travel direction of the vehicle;

determine whether a horizontal coordinate of the focus of expansion stays around a center in the horizontal dimension of the crossing object during a period of time; and

cause the vehicle to brake based on the determination that the horizontal coordinate of the focus of expansion stays around the center in the horizontal dimension of the crossing object during the period of time.

12. The object detecting system of claim 11, wherein the crossing object is an object that has a low time to collision with the vehicle, and

wherein when the crossing object moves linearly at a substantially constant or piecewise constant speed, and the vehicle also moves linearly at a substantially constant or piecewise constant speed, a viewing angle from a camera of the vehicle remains constant during the period of time.

13. The object detecting system of claim 12, wherein the at least one processing device is further programmed to:

determine that the viewing angle is constant based on a detection that the crossing object appears fixed on a horizontal axis of an image plane, and expands in a direction perpendicular to the image plane.

14. The object detecting system of claim 13, wherein the at least one processing device is further programmed to:

determine whether the crossing object will impact the camera based on either a determination that the viewing angle is constant or a determination that the horizontal coordinate of the focus of expansion of the crossing object stays around the center in the horizontal dimension.

15. A vehicle, comprising:

a body;

at least one image capture device configured to acquire a plurality of images of an area in front of the vehicle;

a data interface; and

at least one processing device programmed to:

receive the plurality of images via the data interface;

compare a first image to a second image, and based on the comparison, determine a focus of expansion of a crossing object moving in a direction that crosses a travel direction of the vehicle;

determine whether a horizontal coordinate of the focus of expansion stays around a center in the horizontal dimension of the crossing object during a period of time; and

cause the vehicle to brake based on the determination that the horizontal coordinate of the focus of expansion stays around a center in the horizontal dimension of the crossing object during the period of time.

16. A method for detecting an object in front of a vehicle, comprising:

acquiring, via at least one image capture device, a plurality of images of an area in front of the vehicle;

receiving, via a processing device, the plurality of images;

comparing, via the processing device, a first image to a second image, and based on the comparison, determining a focus of expansion of a crossing object moving in a direction that crosses a travel direction of the vehicle;

determining, via the processing device, whether a horizontal coordinate of the focus of expansion stays around a center in the horizontal dimension of the crossing object during a period of time; and

causing, via the processing device, the vehicle to brake based on the determination that the horizontal coordinate of the focus of expansion stays around a center in the horizontal dimension of the crossing object during the period of time.

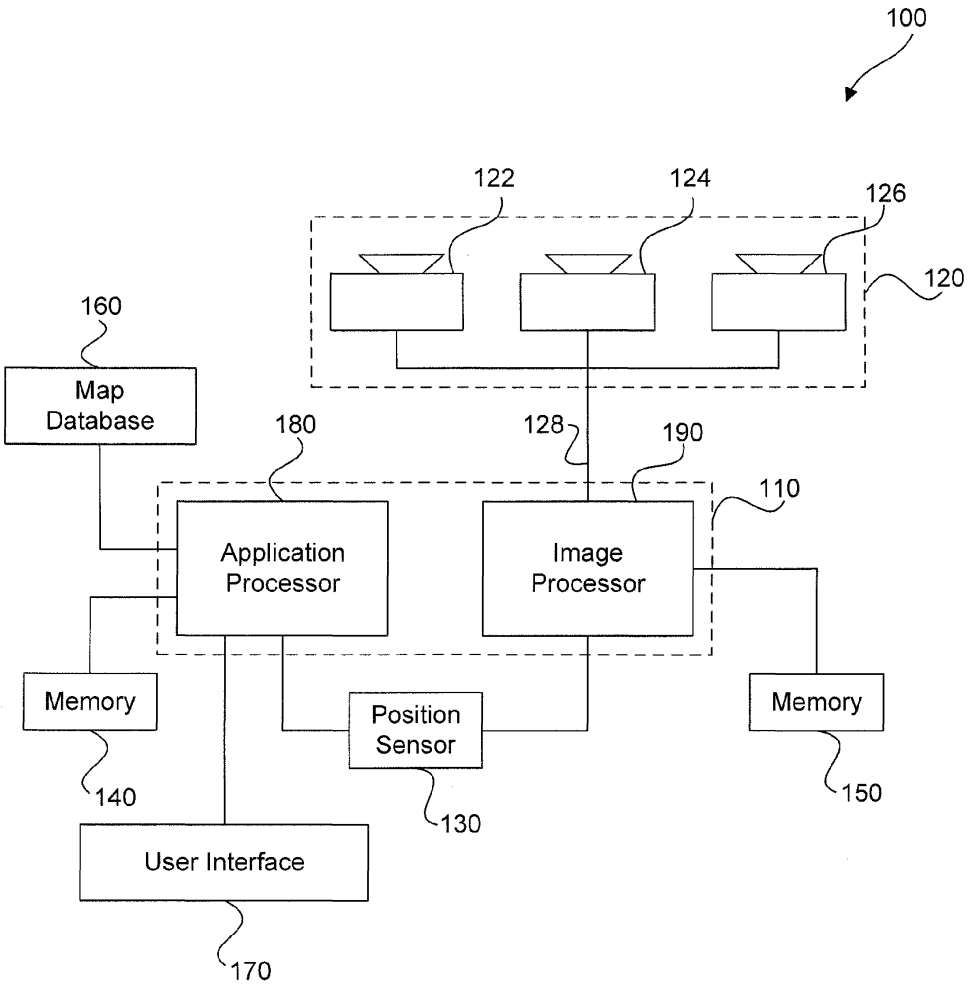
100
122
124
126
120
160
Map Database
180
128
190
110
Application Processor
Image Processor
Memory
Position Sensor
Memory
140
130
150
User Interface
170

FIG. 1

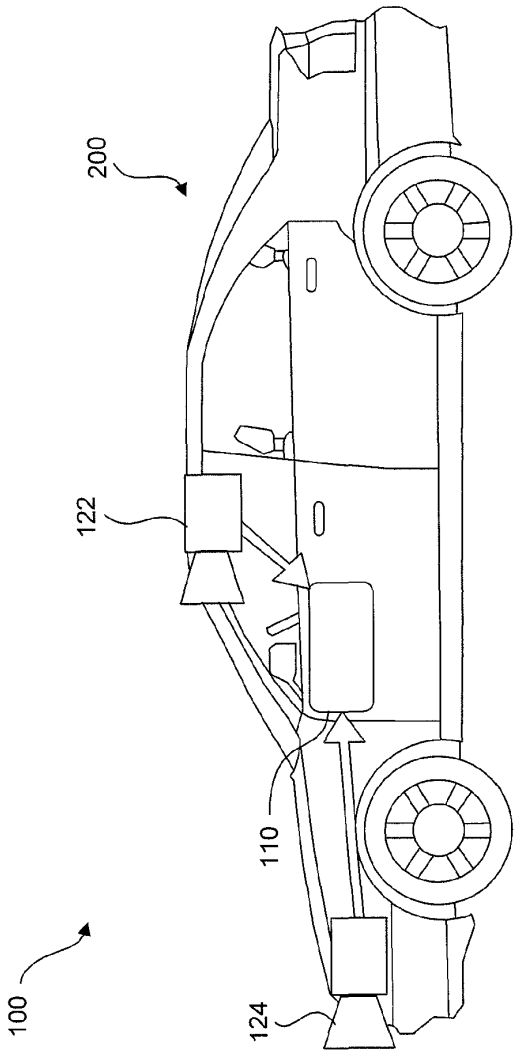

FIG. 2A

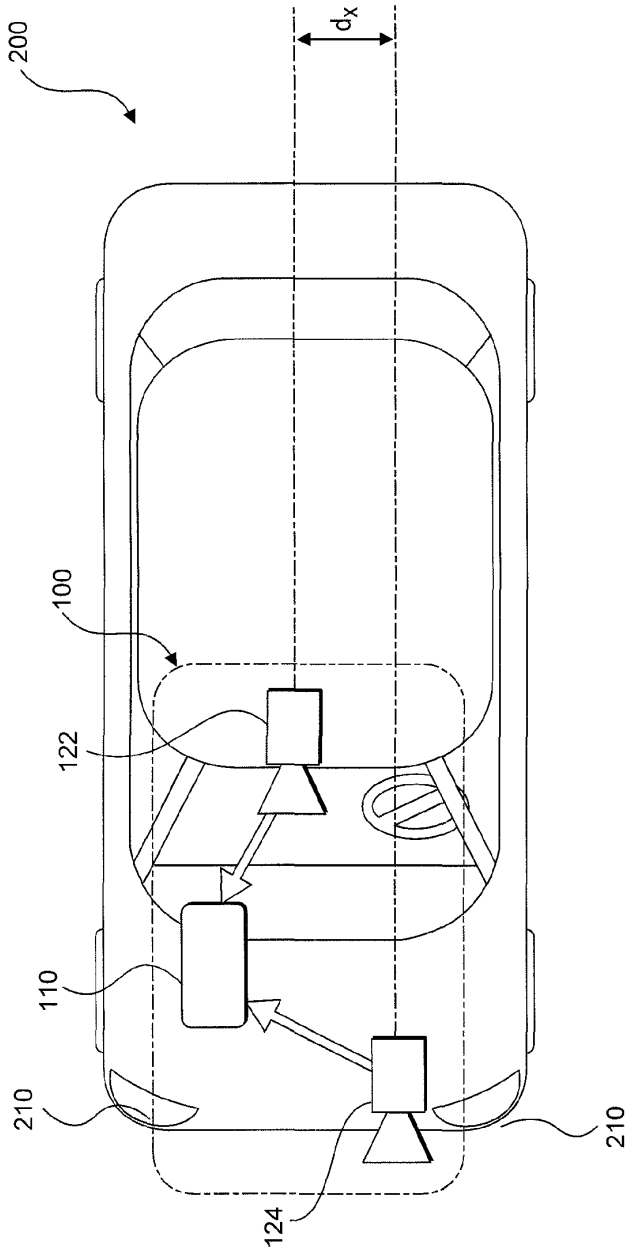

FIG. 2B

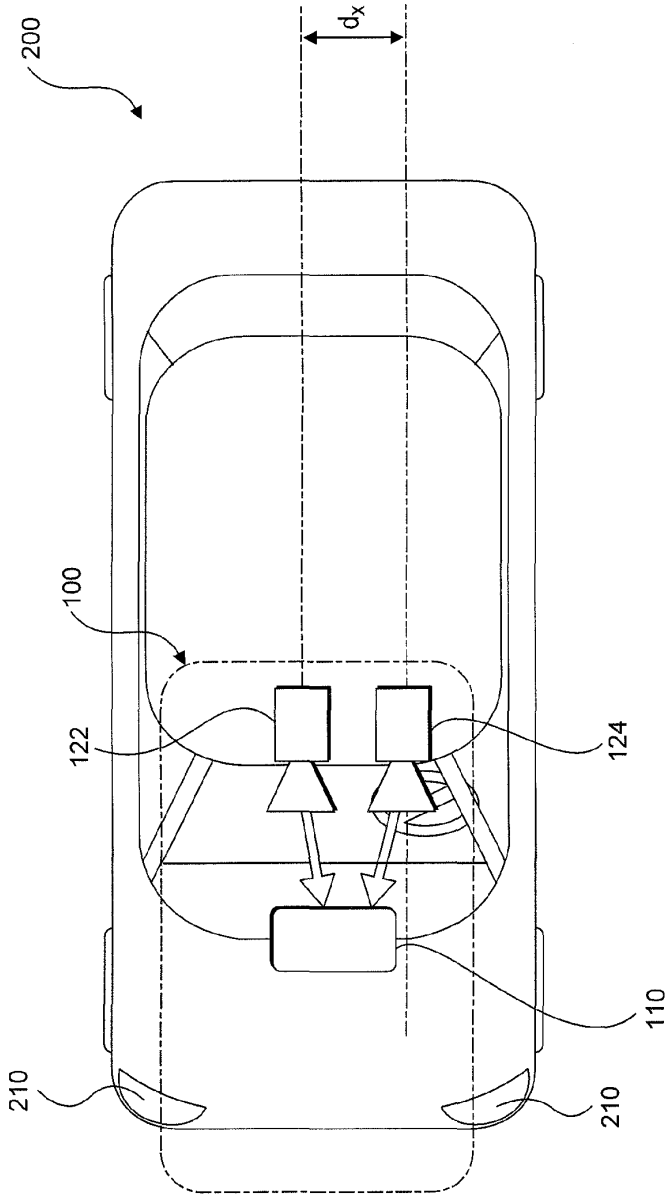

FIG. 2C

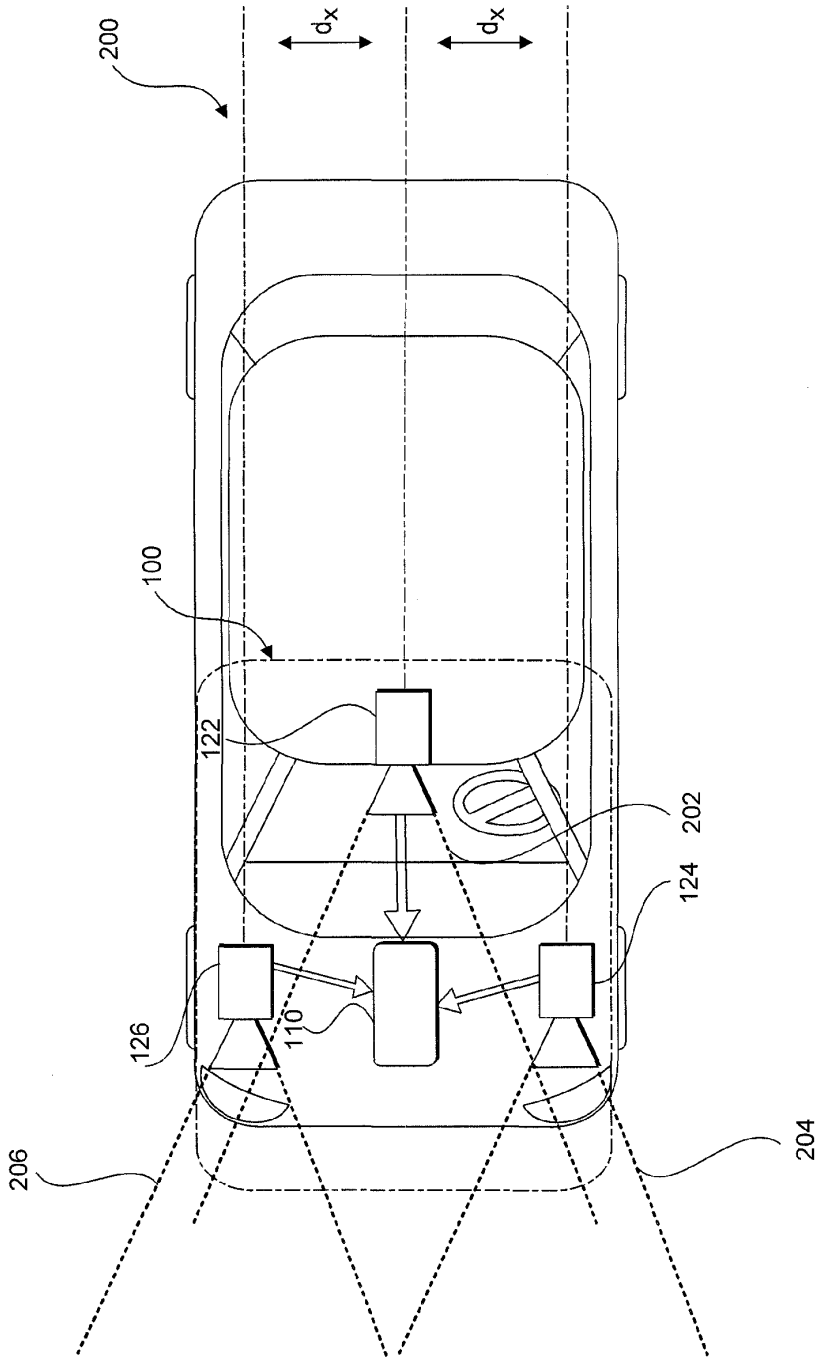

FIG. 2D

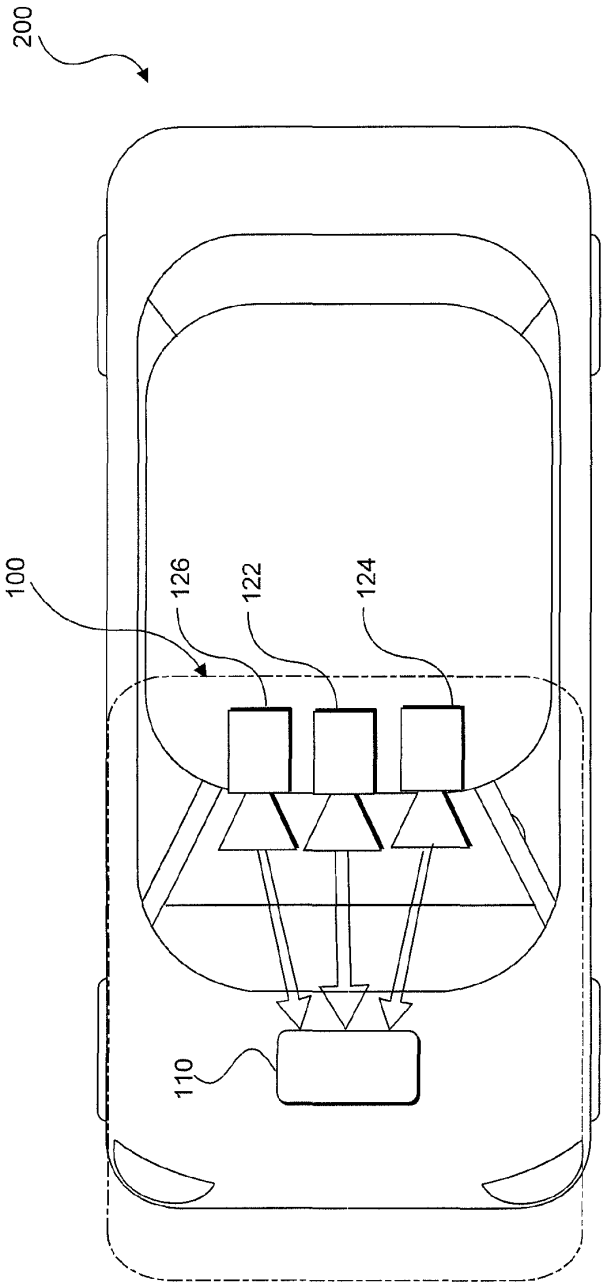

FIG. 2E

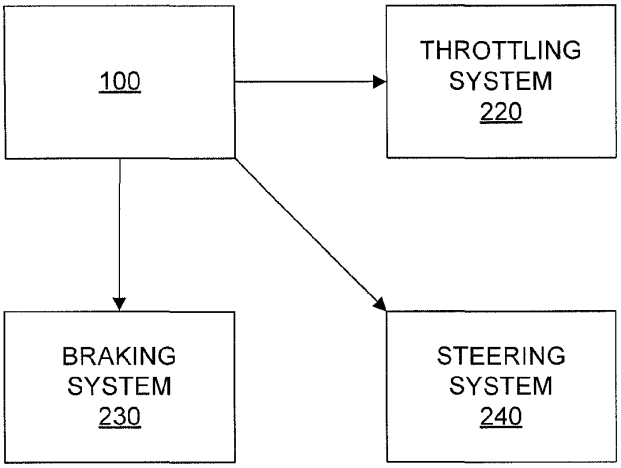
100
THROTTLING SYSTEM 220
BRAKING SYSTEM 230
STEERING SYSTEM 240

FIG. 2F

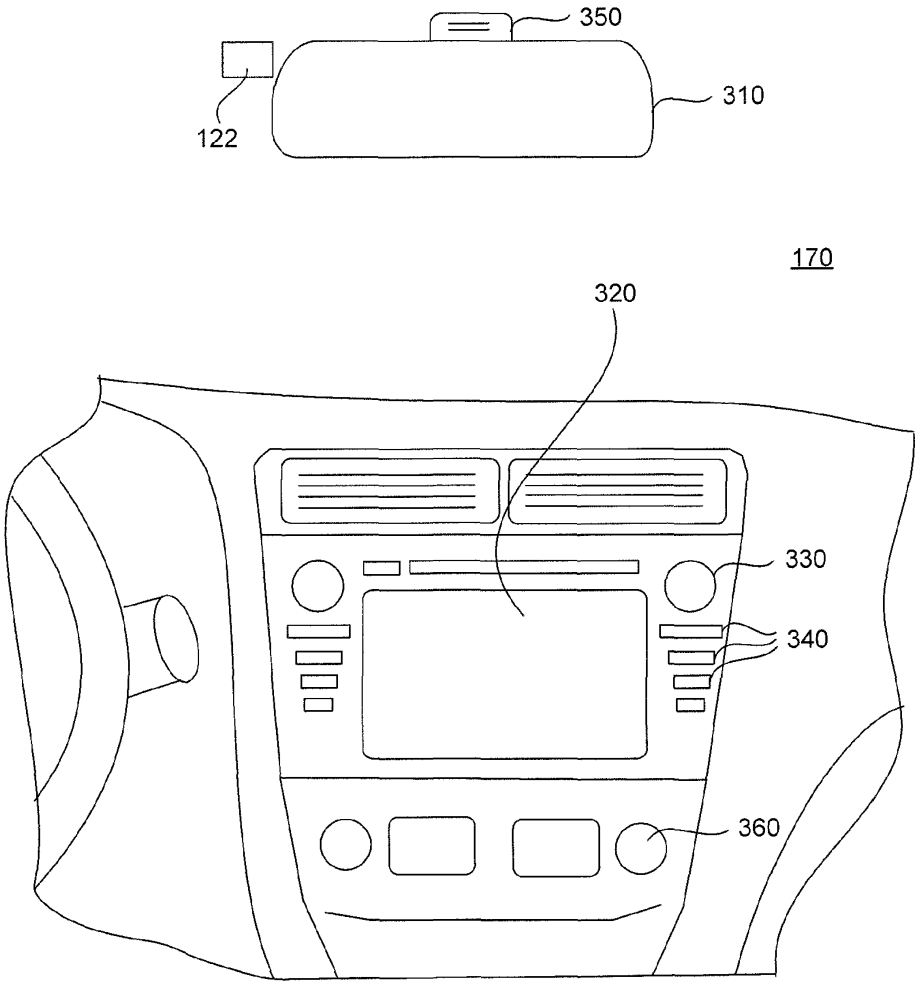

FIG. 3A

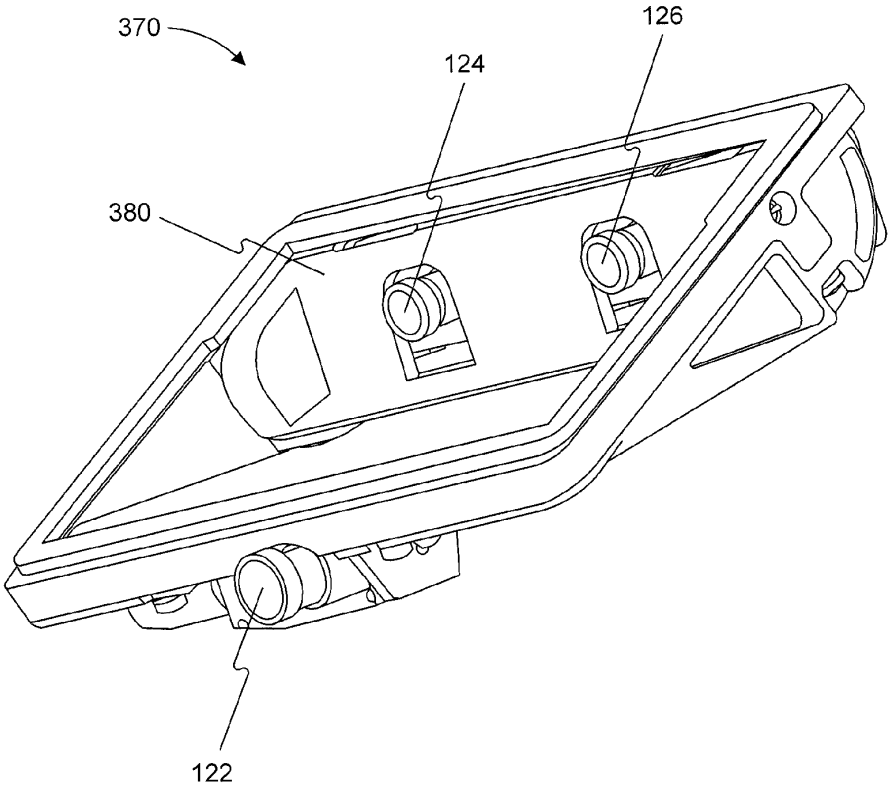

FIG. 3B

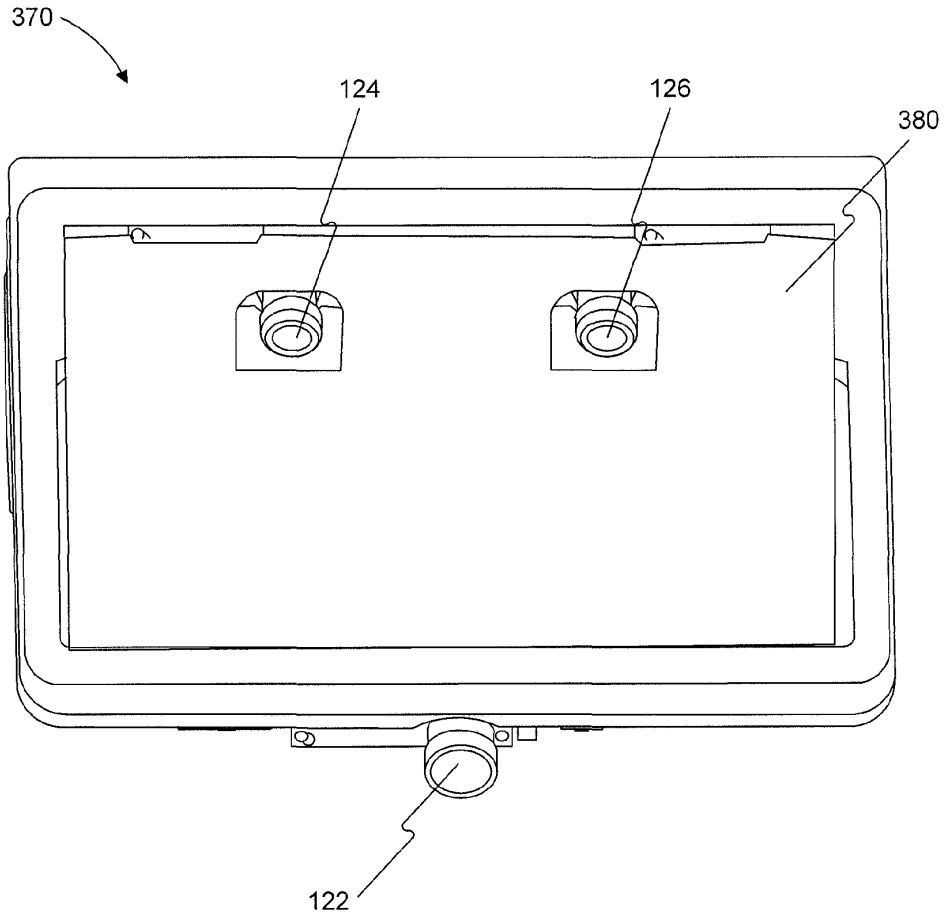

FIG. 3C

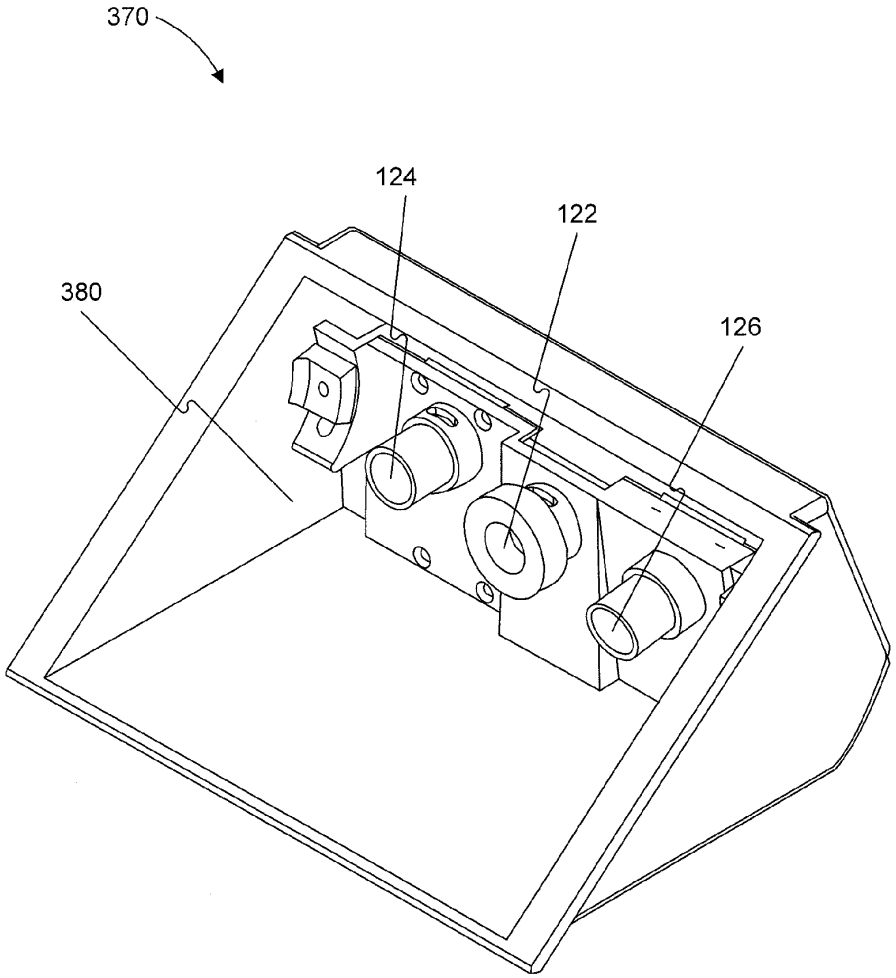

FIG. 3D

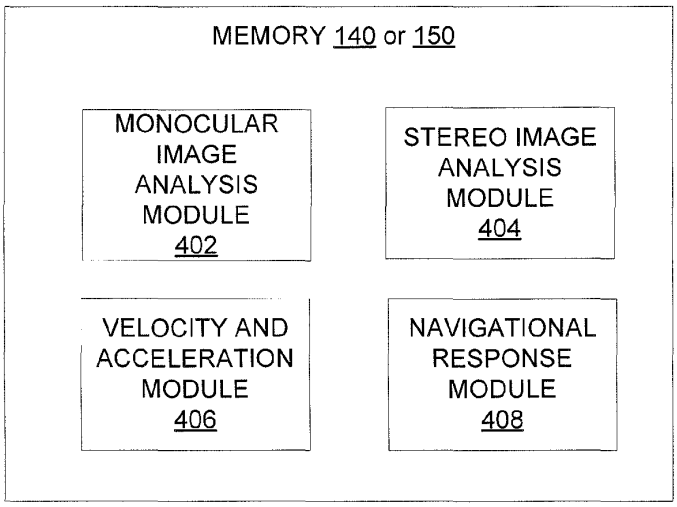
MEMORY 140 or 150
MONOCULAR IMAGE ANALYSIS MODULE 402
STEREO IMAGE ANALYSIS MODULE 404
VELOCITY AND ACCELERATION MODULE 406
NAVIGATIONAL RESPONSE MODULE 408

FIG. 4

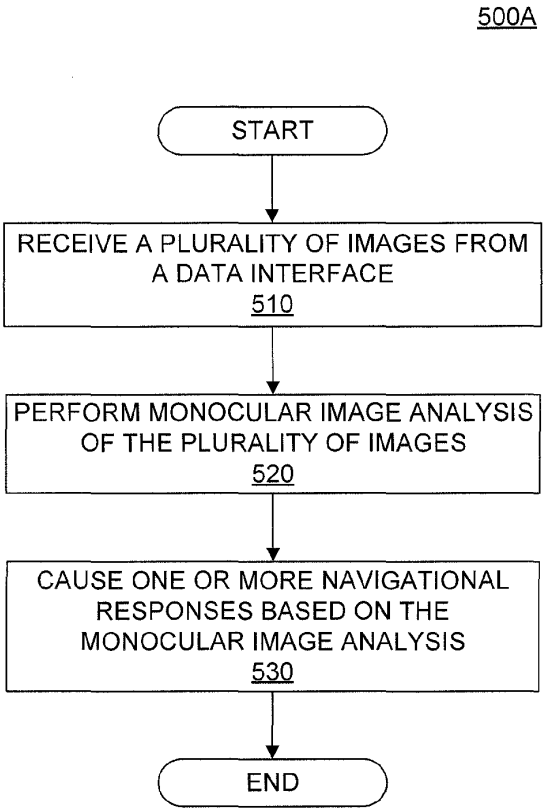
500A
START
RECEIVE A PLURALITY OF IMAGES FROM A DATA INTERFACE
510
PERFORM MONOCULAR IMAGE ANALYSIS OF THE PLURALITY OF IMAGES
520
CAUSE ONE OR MORE NAVIGATIONAL RESPONSES BASED ON THE MONOCULAR IMAGE ANALYSIS
530
END

FIG. 5A

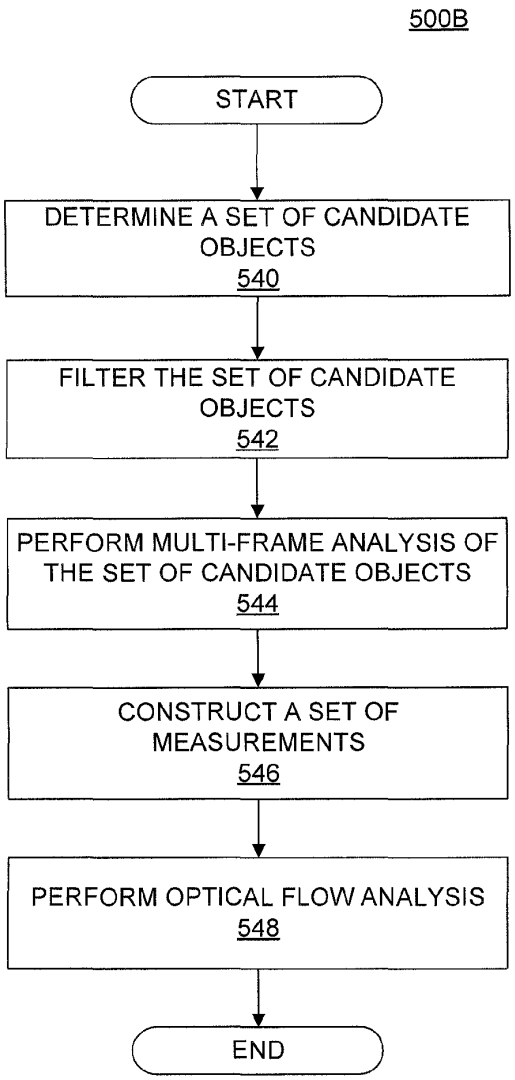
500B
START
DETERMINE A SET OF CANDIDATE OBJECTS
540
FILTER THE SET OF CANDIDATE OBJECTS
542
PERFORM MULTI-FRAME ANALYSIS OF THE SET OF CANDIDATE OBJECTS
544
CONSTRUCT A SET OF MEASUREMENTS
546
PERFORM OPTICAL FLOW ANALYSIS
548
END

FIG. 5B

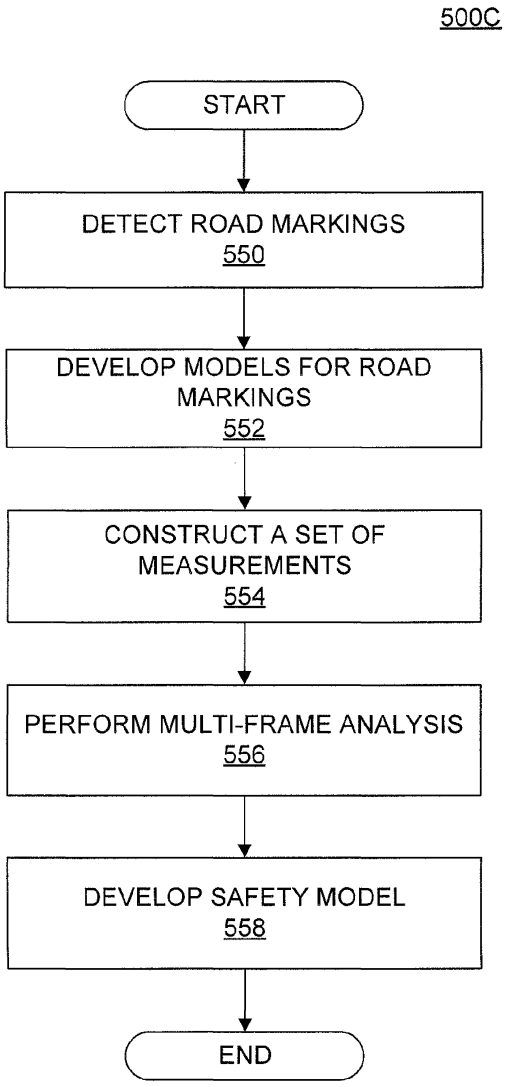
500C
START
DETECT ROAD MARKINGS
550
DEVELOP MODELS FOR ROAD MARKINGS
552
CONSTRUCT A SET OF MEASUREMENTS
554
PERFORM MULTI-FRAME ANALYSIS
556
DEVELOP SAFETY MODEL
558
END

FIG. 5C

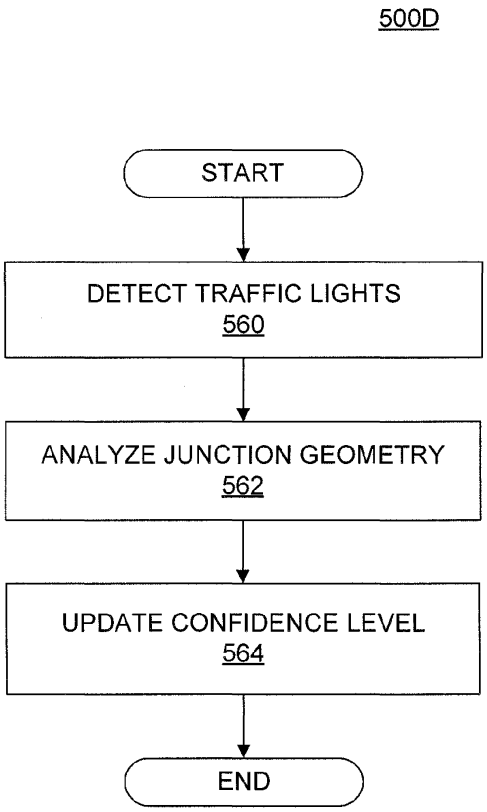
500D
START
DETECT TRAFFIC LIGHTS
560
ANALYZE JUNCTION GEOMETRY
562
UPDATE CONFIDENCE LEVEL
564
END

FIG. 5D

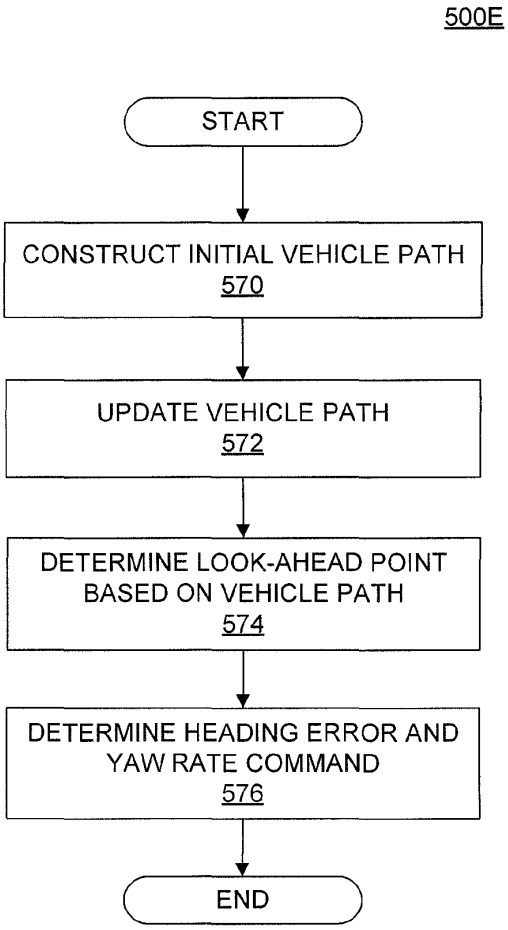
500E
START
CONSTRUCT INITIAL VEHICLE PATH
570
UPDATE VEHICLE PATH
572
DETERMINE LOOK-AHEAD POINT
BASED ON VEHICLE PATH
574
DETERMINE HEADING ERROR AND
YAW RATE COMMAND
576
END

FIG. 5E

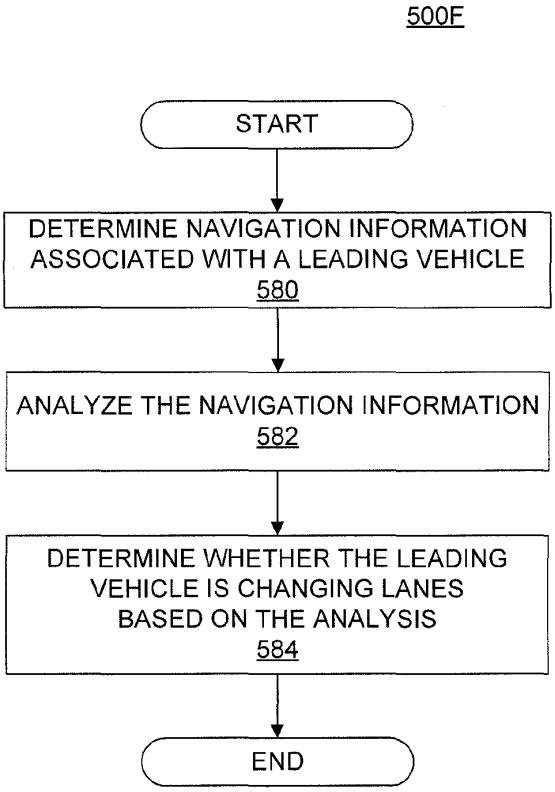
500F
START
DETERMINE NAVIGATION INFORMATION ASSOCIATED WITH A LEADING VEHICLE
580
ANALYZE THE NAVIGATION INFORMATION
582
DETERMINE WHETHER THE LEADING VEHICLE IS CHANGING LANES BASED ON THE ANALYSIS
584
END

FIG. 5F

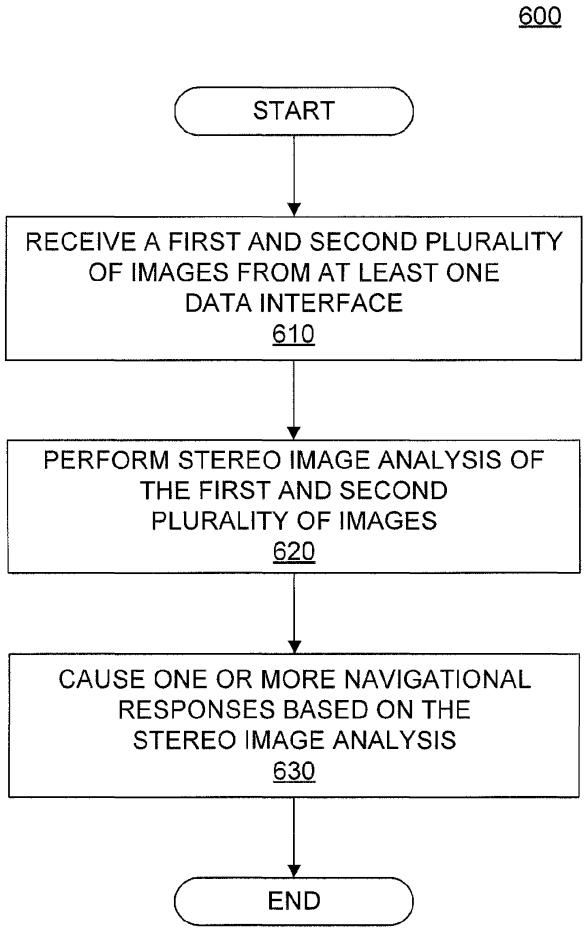
600
START
RECEIVE A FIRST AND SECOND PLURALITY OF IMAGES FROM AT LEAST ONE DATA INTERFACE
610
PERFORM STEREO IMAGE ANALYSIS OF THE FIRST AND SECOND PLURALITY OF IMAGES
620
CAUSE ONE OR MORE NAVIGATIONAL RESPONSES BASED ON THE STEREO IMAGE ANALYSIS
630
END

FIG. 6

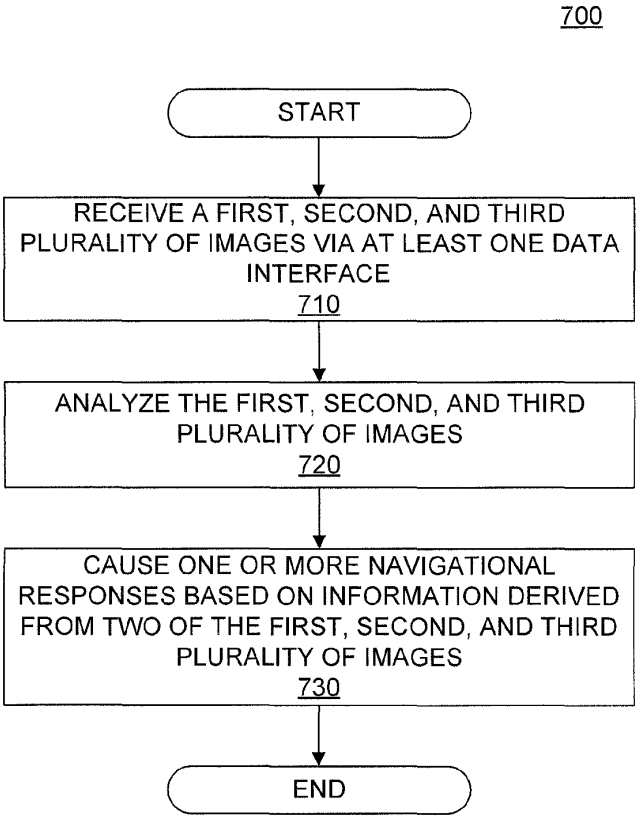
700
START
RECEIVE A FIRST, SECOND, AND THIRD PLURALITY OF IMAGES VIA AT LEAST ONE DATA INTERFACE
710
ANALYZE THE FIRST, SECOND, AND THIRD PLURALITY OF IMAGES
720
CAUSE ONE OR MORE NAVIGATIONAL RESPONSES BASED ON INFORMATION DERIVED FROM TWO OF THE FIRST, SECOND, AND THIRD PLURALITY OF IMAGES
730
END

FIG. 7

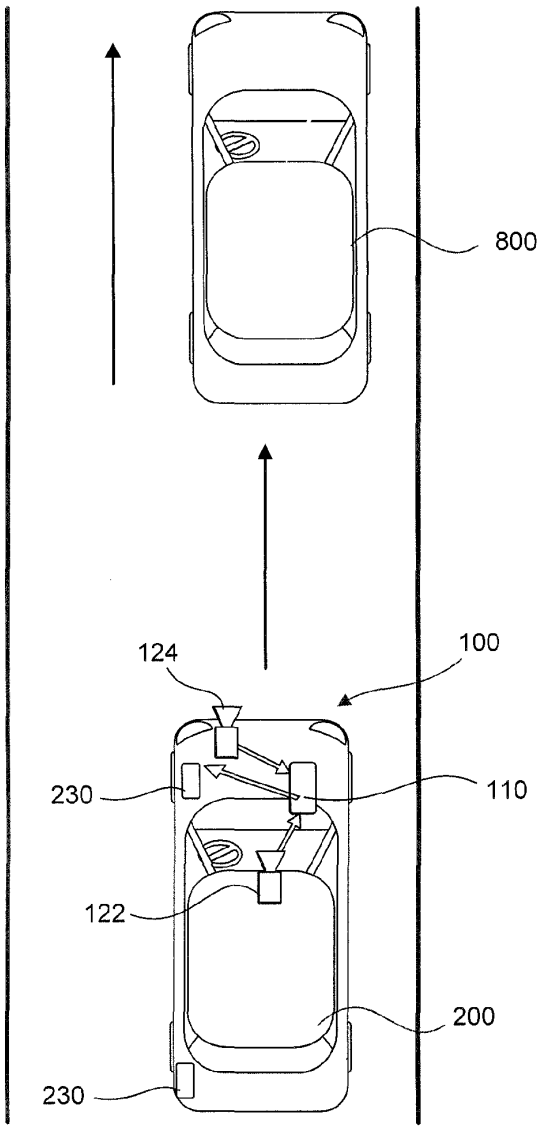

FIG. 8

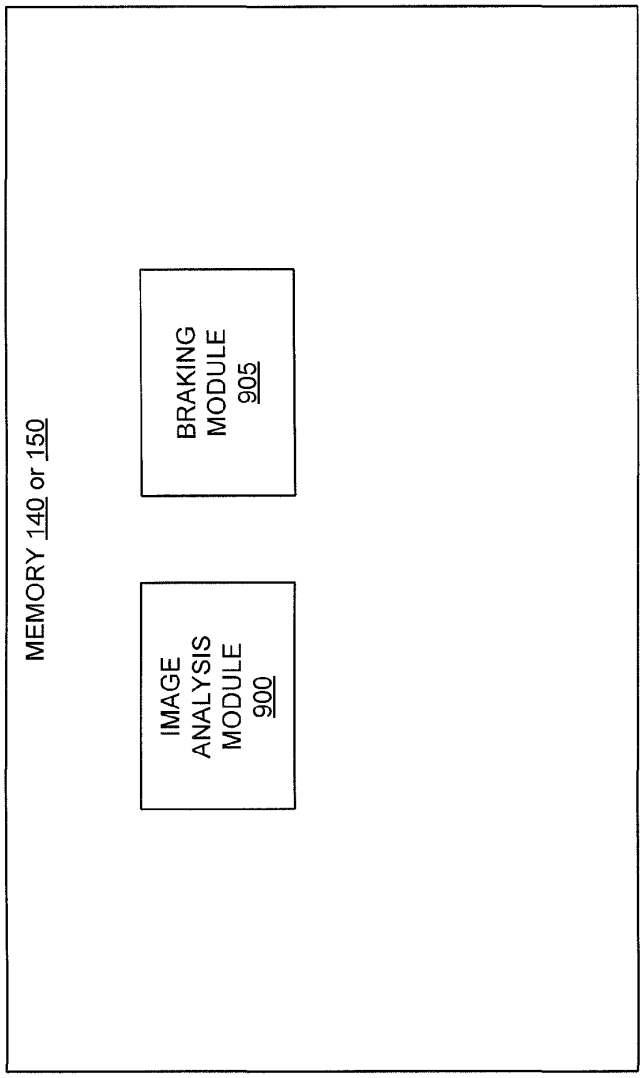
MEMORY 140 or 150
IMAGE ANALYSIS MODULE 900
BRAKING MODULE 905

FIG. 9

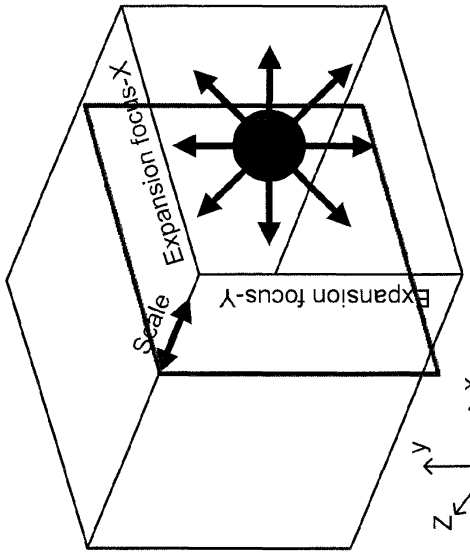

FIG. 10B

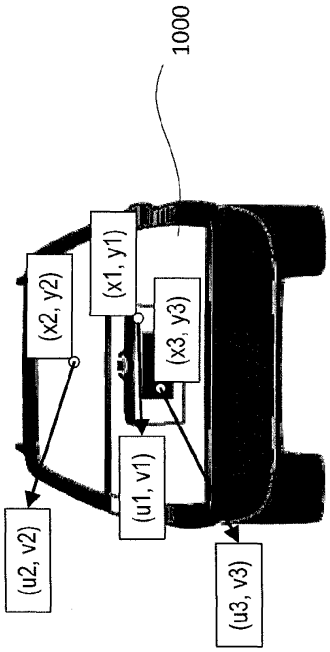

FIG. 10A

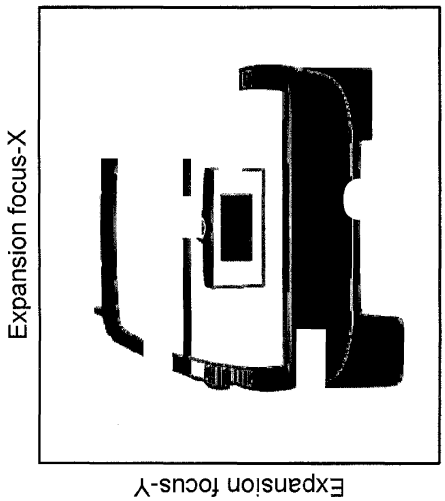

FIG. 10C

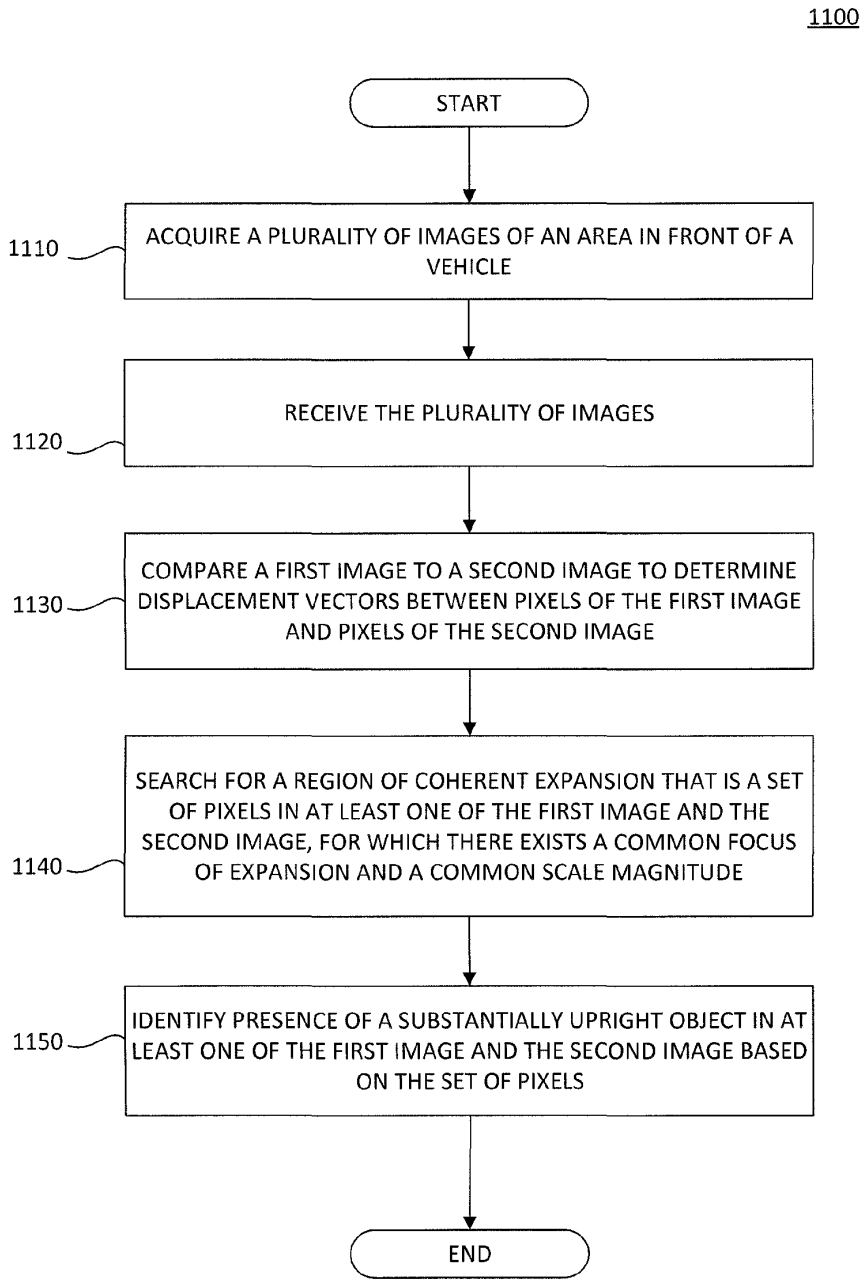
1100
START
1110
ACQUIRE A PLURALITY OF IMAGES OF AN AREA IN FRONT OF A VEHICLE
1120
RECEIVE THE PLURALITY OF IMAGES
1130
COMPARE A FIRST IMAGE TO A SECOND IMAGE TO DETERMINE DISPLACEMENT VECTORS BETWEEN PIXELS OF THE FIRST IMAGE AND PIXELS OF THE SECOND IMAGE
1140
SEARCH FOR A REGION OF COHERENT EXPANSION THAT IS A SET OF PIXELS IN AT LEAST ONE OF THE FIRST IMAGE AND THE SECOND IMAGE, FOR WHICH THERE EXISTS A COMMON FOCUS OF EXPANSION AND A COMMON SCALE MAGNITUDE
1150
IDENTIFY PRESENCE OF A SUBSTANTIALLY UPRIGHT OBJECT IN AT LEAST ONE OF THE FIRST IMAGE AND THE SECOND IMAGE BASED ON THE SET OF PIXELS
END

FIG. 11

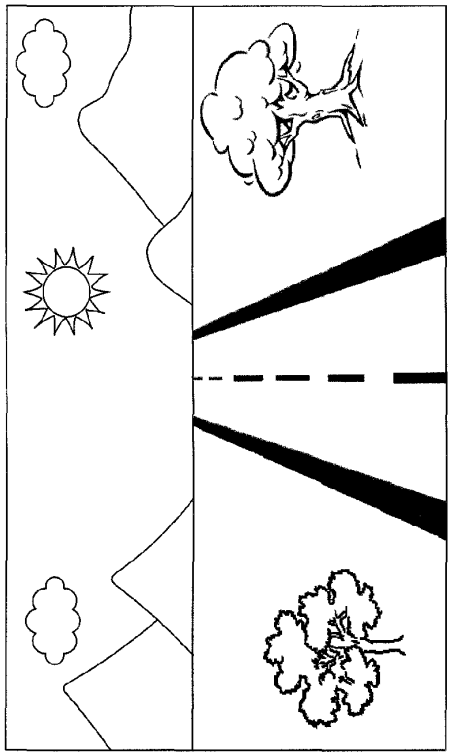

FIG. 12A

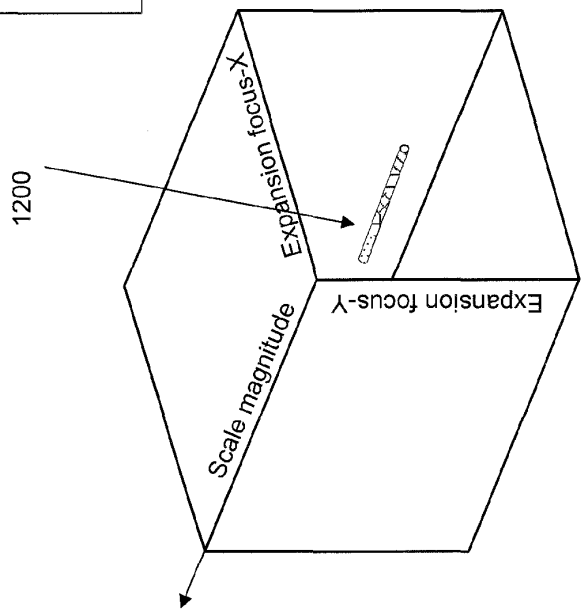

FIG. 12B

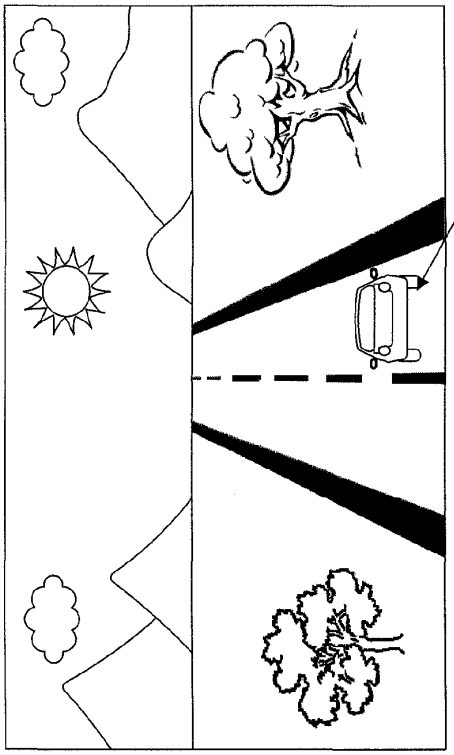

FIG. 13A

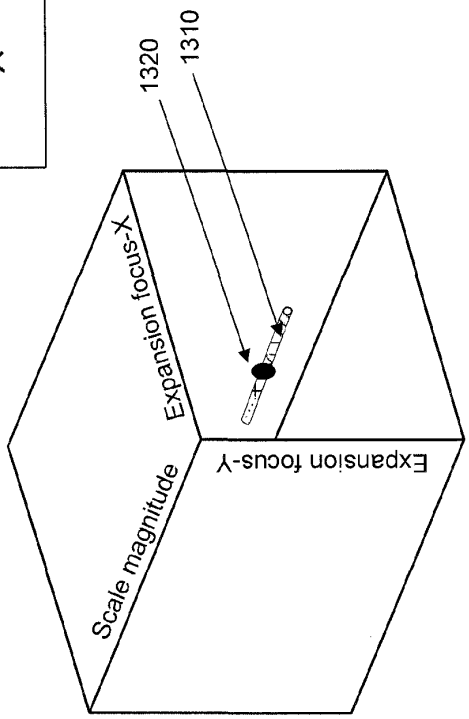

FIG. 13B

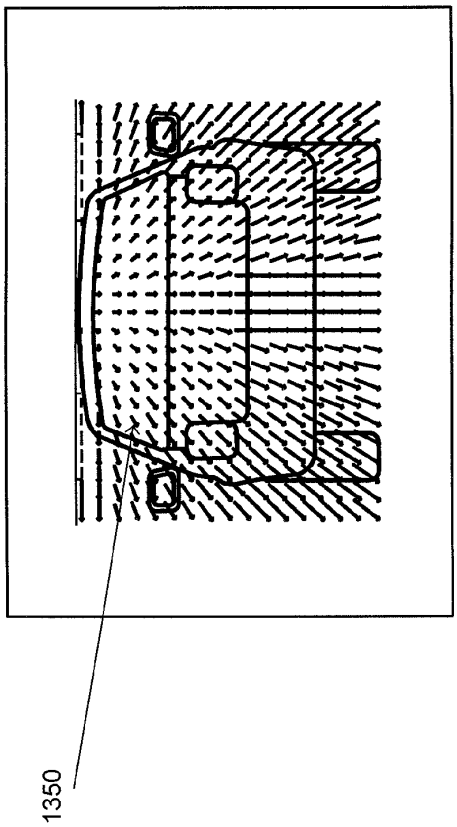

FIG. 13C

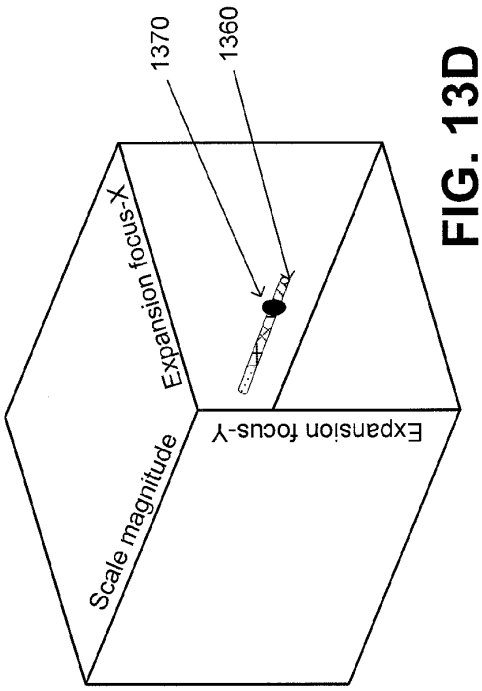

FIG. 13D

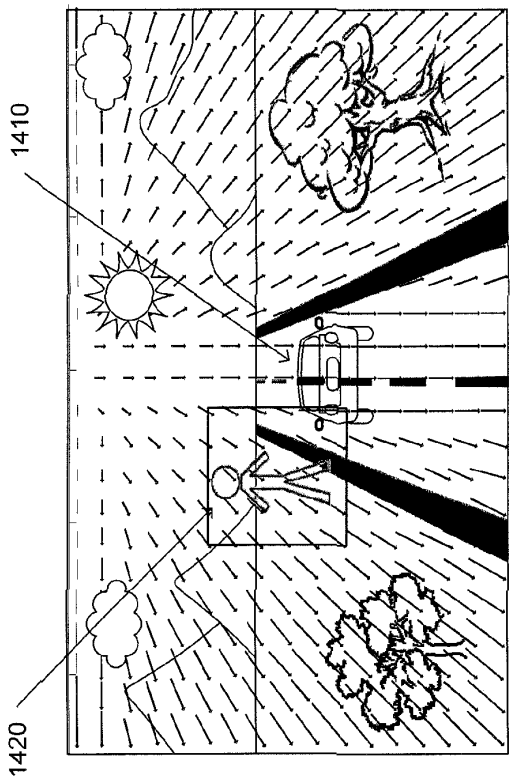

FIG. 14A

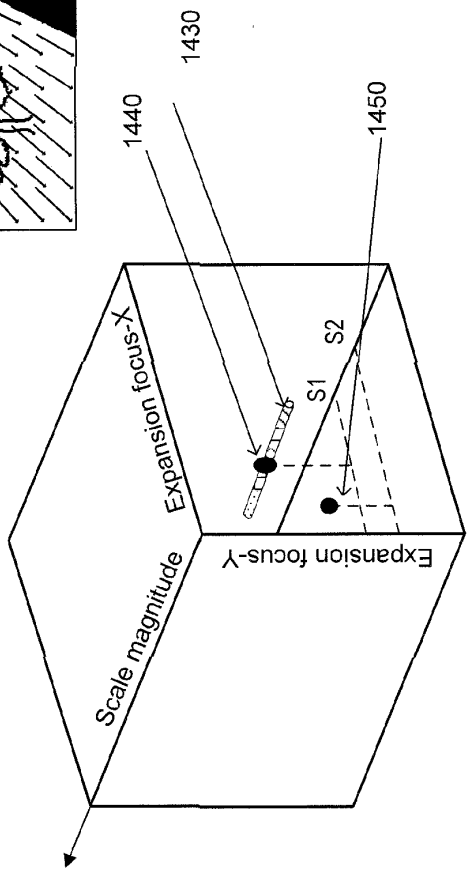

FIG. 14B

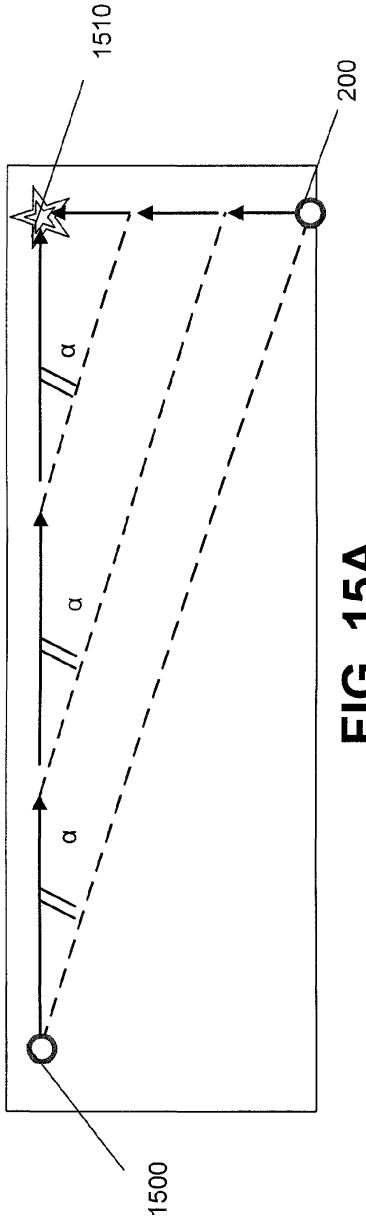

FIG. 15A

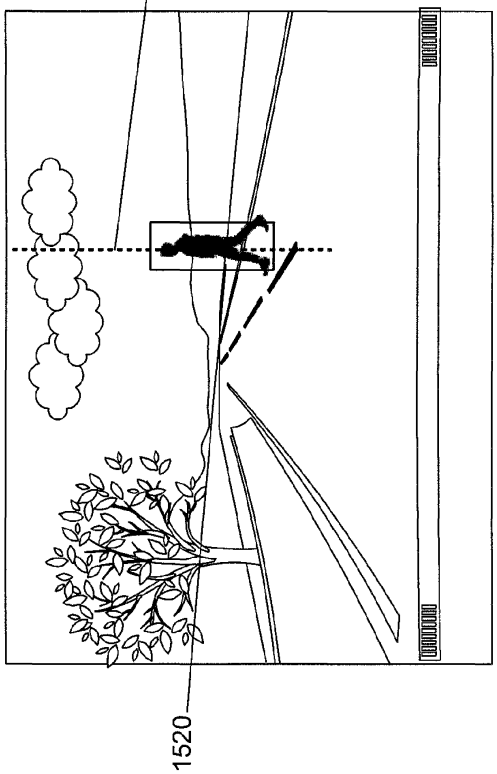

FIG. 15B

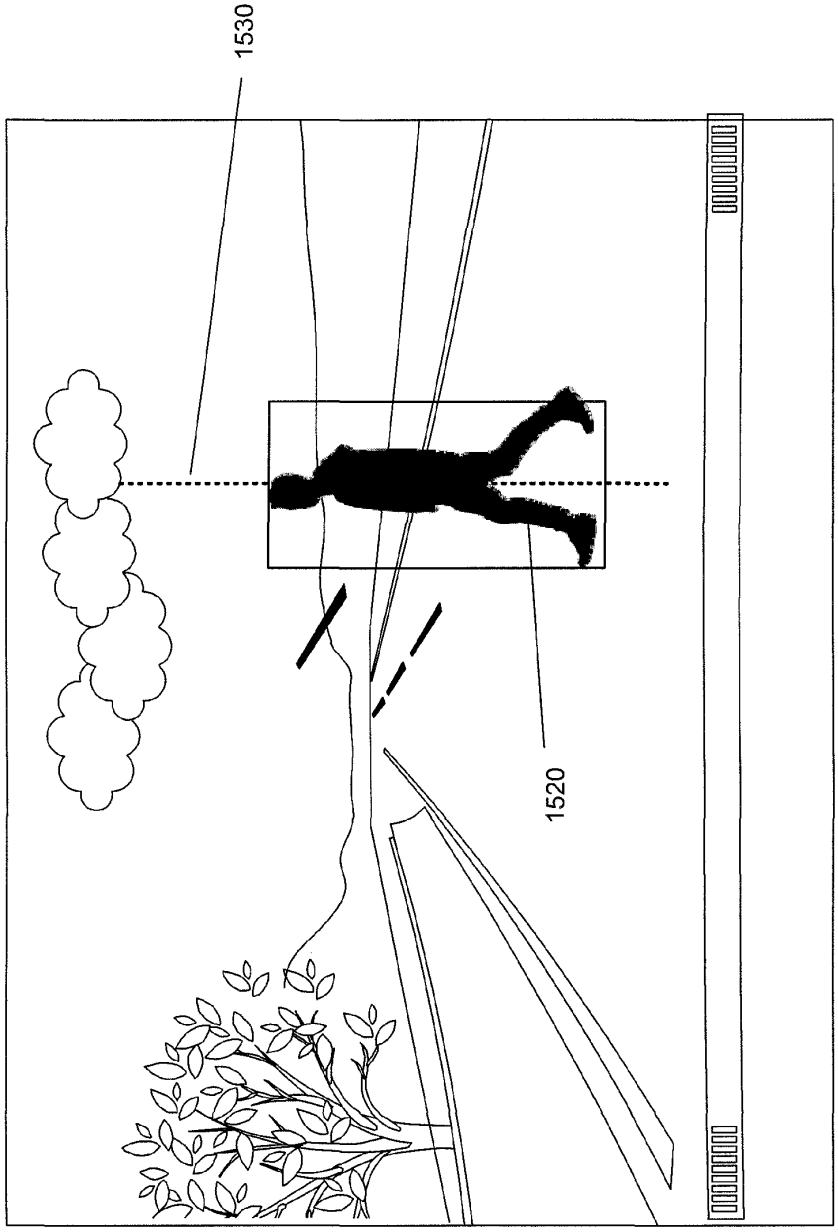

FIG. 15C

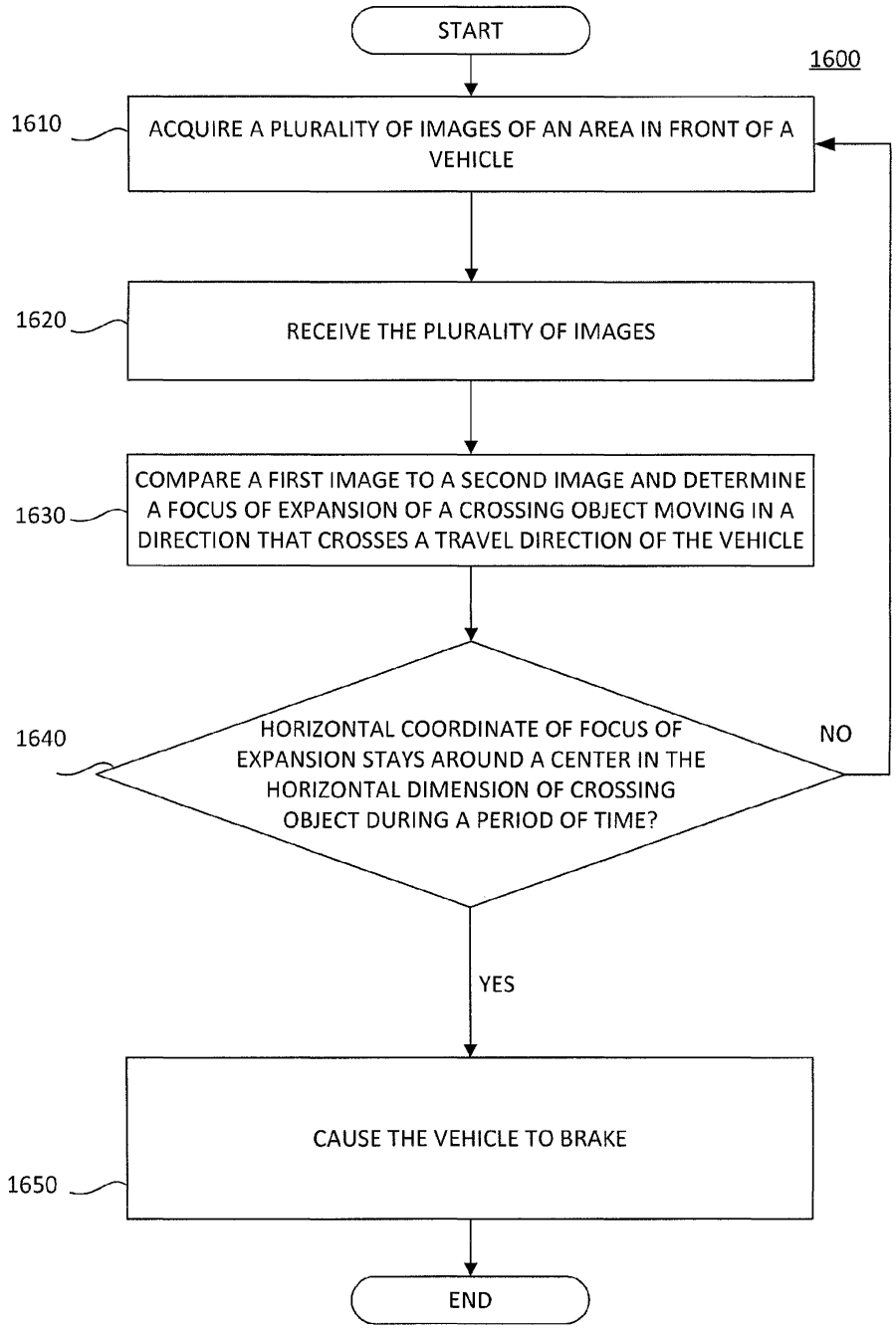
START
1600
1610
ACQUIRE A PLURALITY OF IMAGES OF AN AREA IN FRONT OF A VEHICLE
1620
RECEIVE THE PLURALITY OF IMAGES
1630
COMPARE A FIRST IMAGE TO A SECOND IMAGE AND DETERMINE A FOCUS OF EXPANSION OF A CROSSING OBJECT MOVING IN A DIRECTION THAT CROSSES A TRAVEL DIRECTION OF THE VEHICLE
1640
HORIZONTAL COORDINATE OF FOCUS OF EXPANSION STAYS AROUND A CENTER IN THE HORIZONTAL DIMENSION OF CROSSING OBJECT DURING A PERIOD OF TIME?
NO
YES
1650
CAUSE THE VEHICLE TO BRAKE
END

FIG. 16

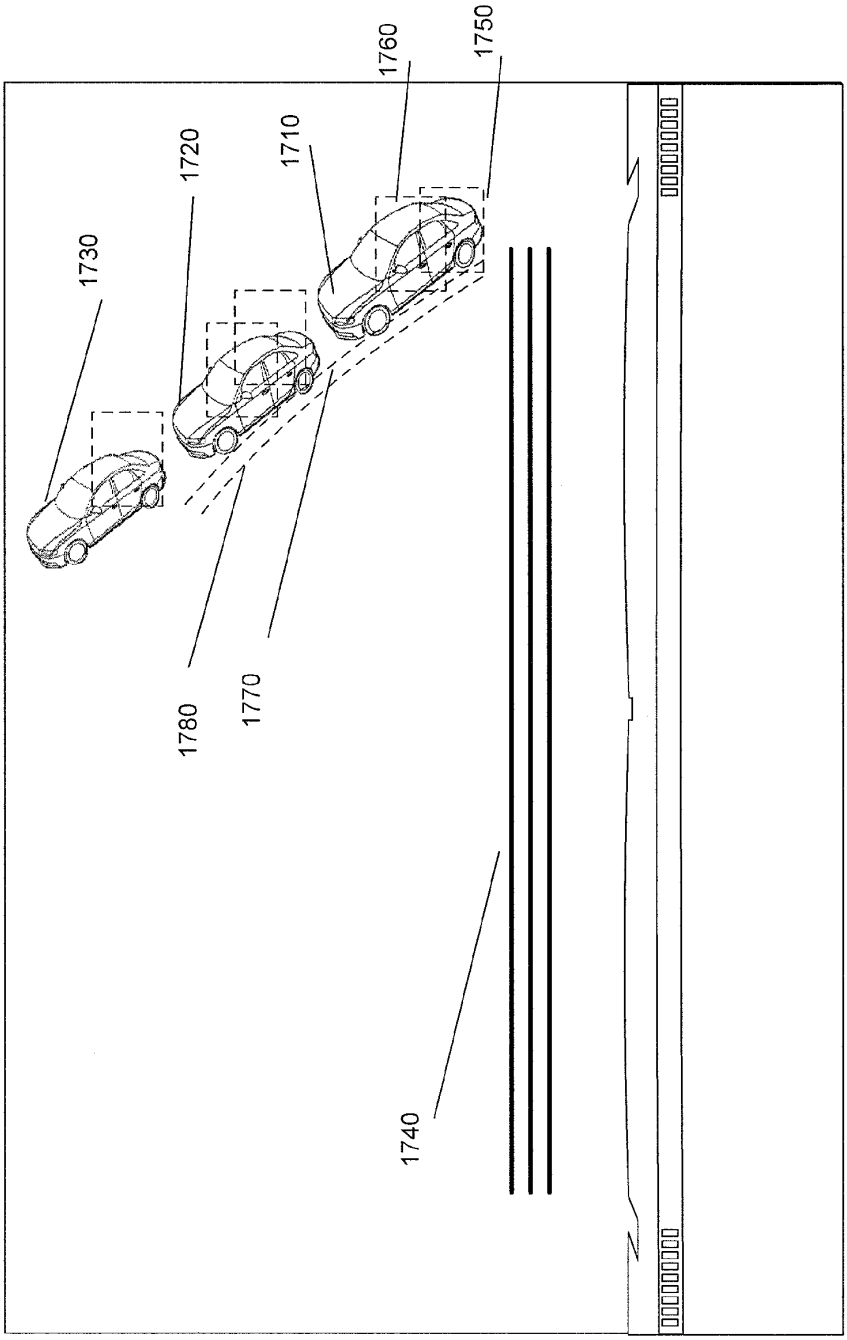

FIG. 17

(12) INTERNATIONAL APPLICATION PUBLISHED UNDER THE PATENT COOPERATION TREATY (PCT)

(19) World Intellectual Property Organization
International Bureau

(43) International Publication Date
10 December 2015 (10.12.2015)

WIPO | PCT

(10) International Publication Number
WO 2015/186002 A3

(51) International Patent Classification:
G06K 9/00 (2006.01) *G06T 7/20* (2006.01)

(21) International Application Number:
PCT/IB2015/001593

(22) International Filing Date:
3 June 2015 (03.06.2015)

(25) Filing Language: English

(26) Publication Language: English

(30) Priority Data:
62/006,912 3 June 2014 (03.06.2014) US

(71) Applicant: **MOBILEYE VISION TECHNOLOGIES LTD.** [IL/IL]; 13 Hartom Street, P.O.B. 45157, Har Hotzvim, 91450 Jerusalem (IL).

(72) Inventors: **SHASHUA, Amnon**; 13 Hartom Street, P.O.B. 45157, Har Hotzvim, 91450 Jerusalem (IL). **DAGAN, Erez**; 13 Hartom Street, P.O.B. 45157, Har Hotzvim, 91450 Jerusalem (IL). **BABA, Tomer**; 13 Hartom Street, P.O. Box 45157, Har Hotzvim, 91450 Jerusalem (IL). **MYERS, Yoni**; 13 Hartom Street, P.O. Box 45157, Har Hotzvim, 91450 Jerusalem (IL). **HOLLANDER, Yossi**; 13 Hartom Street, P.O. Box 45157, Har Hotzvim, 91450 Jerusalem (IL).

(81) Designated States *(unless otherwise indicated, for every kind of national protection available)*: AE, AG, AL, AM, AO, AT, AU, AZ, BA, BB, BG, BH, BN, BR, BW, BY, BZ, CA, CH, CL, CN, CO, CR, CU, CZ, DE, DK, DM, DO, DZ, EC, EE, EG, ES, FI, GB, GD, GE, GH, GM, GT, HN, HR, HU, ID, IL, IN, IR, IS, JP, KE, KG, KN, KP, KR, KZ, LA, LC, LK, LR, LS, LU, LY, MA, MD, ME, MG, MK, MN, MW, MX, MY, MZ, NA, NG, NI, NO, NZ, OM, PA, PE, PG, PH, PL, PT, QA, RO, RS, RU, RW, SA, SC, SD, SE, SG, SK, SL, SM, ST, SV, SY, TH, TJ, TM, TN, TR, TT, TZ, UA, UG, US, UZ, VC, VN, ZA, ZM, ZW.

(84) Designated States *(unless otherwise indicated, for every kind of regional protection available)*: ARIPO (BW, GH, GM, KE, LR, LS, MW, MZ, NA, RW, SD, SL, ST, SZ, TZ, UG, ZM, ZW), Eurasian (AM, AZ, BY, KG, KZ, RU, TJ, TM), European (AL, AT, BE, BG, CH, CY, CZ, DE, DK, EE, ES, FI, FR, GB, GR, HR, HU, IE, IS, IT, LT, LU, LV, MC, MK, MT, NL, NO, PL, PT, RO, RS, SE, SI, SK, SM, TR), OAPI (BF, BJ, CF, CG, CI, CM, GA, GN, GQ, GW, KM, ML, MR, NE, SN, TD, TG).

Published:

— *with international search report (Art. 21(3))*

— *before the expiration of the time limit for amending the claims and to be republished in the event of receipt of amendments (Rule 48.2(h))*

(88) Date of publication of the international search report:
31 March 2016

(54) Title: SYSTEMS AND METHODS FOR DETECTING AN OBJECT

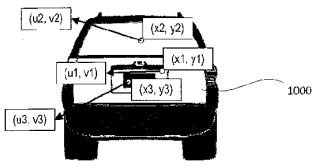

FIG. 10A

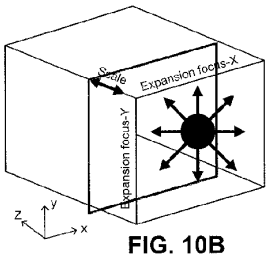

FIG. 10B

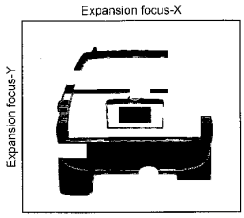

FIG. 10C

(57) Abstract: Systems and methods are provided for detecting an object in front of a vehicle. In one implementation, an object detecting system includes an image capture device configured to acquire a plurality of images of an area, a data interface, and a processing device programmed to compare a first image to a second image to determine displacement vectors between pixels, to search for a region of coherent expansion that is a set of pixels in at least one of the first image and the second image, for which there exists a common focus of expansion and a common scale magnitude such that the set of pixels satisfy a relationship between pixel positions, displacement vectors, the common focus of expansion, and the common scale magnitude, and to identify presence of a substantially upright object based on the set of pixels.

WO 2015/186002 A3

INTERNATIONAL SEARCH REPORT

International application No
PCT/IB2015/001593

A. CLASSIFICATION OF SUBJECT MATTER
INV. G06K9/00 G06T7/20
ADD.

According to International Patent Classification (IPC) or to both national classification and IPC

B. FIELDS SEARCHED

Minimum documentation searched (classification system followed by classification symbols)
G06K G06T

Documentation searched other than minimum documentation to the extent that such documents are included in the fields searched

Electronic data base consulted during the international search (name of data base and, where practicable, search terms used)

EPO-Internal, WPI Data

C. DOCUMENTS CONSIDERED TO BE RELEVANT

Category*	Citation of document, with indication, where appropriate, of the relevant passages	Relevant to claim No.
X	DARYL T LAWTON: "Processing translational motion sequences", COMPUTER VISION, GRAPHICS, AND IMAGE PROCESSING, vol. 22, no. 1, 1 April 1983 (1983-04-01), pages 116-144, XP055066061, ISSN: 0734-189X, DOI: 10.1016/0734-189X(83)90098-1 sections I, IV, V -----	1-10
X	EP 1 617 376 A2 (NISSAN MOTOR [JP]) 18 January 2006 (2006-01-18) the whole document -----	1-10

-/--

[X] Further documents are listed in the continuation of Box C.

[X] See patent family annex.

* Special categories of cited documents :

"A" document defining the general state of the art which is not considered to be of particular relevance

"E" earlier application or patent but published on or after the international filing date

"L" document which may throw doubts on priority claim(s) or which is cited to establish the publication date of another citation or other special reason (as specified)

"O" document referring to an oral disclosure, use, exhibition or other means

"P" document published prior to the international filing date but later than the priority date claimed

"T" later document published after the international filing date or priority date and not in conflict with the application but cited to understand the principle or theory underlying the invention

"X" document of particular relevance; the claimed invention cannot be considered novel or cannot be considered to involve an inventive step when the document is taken alone

"Y" document of particular relevance; the claimed invention cannot be considered to involve an inventive step when the document is combined with one or more other such documents, such combination being obvious to a person skilled in the art

"&" document member of the same patent family

Date of the actual completion of the international search	Date of mailing of the international search report
22 January 2016	02/02/2016

Name and mailing address of the ISA/	Authorized officer
European Patent Office, P.B. 5818 Patentlaan 2 NL - 2280 HV Rijswijk Tel. (+31-70) 340-2040, Fax: (+31-70) 340-3016	Neubüser, Bernhard

3

Form PCT/ISA/210 (second sheet) (April 2005)

INTERNATIONAL SEARCH REPORT

International application No
PCT/IB2015/001593

C(Continuation). DOCUMENTS CONSIDERED TO BE RELEVANT

Category*	Citation of document, with indication, where appropriate, of the relevant passages	Relevant to claim No.
X	William B. Thompson ET AL: "Chapter 11: Motion of Viewer and Objects" In: "Visual Perception from a Computer Graphics Perspective", 1 January 2011 (2011-01-01), CRC Press, Boca Raton , Florida, USA, XP055244128, ISBN: 978-1-4665-0276-5 pages 445-484, Subsection 11.2.6: "Perception of Speed of Movement and Time-to-Collision" Subsection 11.3.3: "Moving Object and Collision Detection" -----	11-16
X	Venkataraman Sundareswaran ET AL: "Chapter 12: Fast Processing of Image Motion Patterns Arising from 3-D Translational Motion" In: "Optic Flow and Beyond", 1 January 2004 (2004-01-01), Springer Science and Business Media B.V., Netherlands, XP055244141, ISBN: 978-90-48-16589-6 pages 273-287, DOI: 10.1007/978-1-4020-2092-6, Section 3: "Proposed Method" Subsection 4.3: "Collisiton Detection" -----	11-16
X	JEFFREY BYRNE ET AL: "Expansion segmentation for visual collision detection and estimation", 2009 IEEE INTERNATIONAL CONFERENCE ON ROBOTICS AND AUTOMATION : (ICRA) ; KOBE, JAPAN, 12 - 17 MAY 2009, IEEE, PISCATAWAY, NJ, USA, 12 May 2009 (2009-05-12), pages 875-882, XP031509721, ISBN: 978-1-4244-2788-8 page 867, left-hand column, last paragraph page 877, left-hand column page 878, left-hand column -----	11-16
A	RUI NI ET AL: "Detection of collision events on curved trajectories: Optical information from invariant rate-of-bearing change", PERCEPTION AND PSYCHOPHYSICS., vol. 70, no. 7, 1 October 2008 (2008-10-01), pages 1314-1324, XP055243824, US ISSN: 0031-5117, DOI: 10.3758/PP/70.7.1314 page 2 - page 3 -----	11-16

3

Form PCT/ISA/210 (continuation of second sheet) (April 2005)

INTERNATIONAL SEARCH REPORT

Information on patent family members

International application No
PCT/IB2015/001593

Patent document cited in search report	Publication date	Patent family member(s)	Publication date
EP 1617376 A2	18-01-2006	EP 1617376 A2	18-01-2006
		JP 3846494 B2	15-11-2006
		JP 2006031162 A	02-02-2006
		US 2006013480 A1	19-01-2006

Form PCT/ISA/210 (patent family annex) (April 2005)

International application No.
PCT/IB2015/001593

INTERNATIONAL SEARCH REPORT

Box No. II Observations where certain claims were found unsearchable (Continuation of item 2 of first sheet)

This international search report has not been established in respect of certain claims under Article 17(2)(a) for the following reasons:

1. ☐ Claims Nos.:
because they relate to subject matter not required to be searched by this Authority, namely:

2. ☐ Claims Nos.:
because they relate to parts of the international application that do not comply with the prescribed requirements to such an extent that no meaningful international search can be carried out, specifically:

3. ☐ Claims Nos.:
because they are dependent claims and are not drafted in accordance with the second and third sentences of Rule 6.4(a).

Box No. III Observations where unity of invention is lacking (Continuation of item 3 of first sheet)

This International Searching Authority found multiple inventions in this international application, as follows:

see additional sheet

1. ☒ As all required additional search fees were timely paid by the applicant, this international search report covers all searchable claims.

2. ☐ As all searchable claims could be searched without effort justifying an additional fees, this Authority did not invite payment of additional fees.

3. ☐ As only some of the required additional search fees were timely paid by the applicant, this international search report covers only those claims for which fees were paid, specifically claims Nos.:

4. ☐ No required additional search fees were timely paid by the applicant. Consequently, this international search report is restricted to the invention first mentioned in the claims; it is covered by claims Nos.:

Remark on Protest

☐ The additional search fees were accompanied by the applicant's protest and, where applicable, the payment of a protest fee.

☐ The additional search fees were accompanied by the applicant's protest but the applicable protest fee was not paid within the time limit specified in the invitation.

☒ No protest accompanied the payment of additional search fees.

FURTHER INFORMATION CONTINUED FROM PCT/ISA/ 210

This International Searching Authority found multiple (groups of) inventions in this international application, as follows:

1. claims: 1-10

   An alternative system (claims 1-6), corresponding method (claims 8-10), and a vehicle (claims 7) comprising the system, for detecting an object in an image sequence by finding a region of coherent expansion in an displacement vector field obtained by comparing two images, to the one known from D2.

   ---

2. claims: 11-16

   A system (claims 11-14), corresponding method (claim 16) and vehicle comprising the system (claim 15), for controlling the brake of a/the vehicle based on the determination that the horizontal coordinate of a focus of expansion stays around the center in the horizontal dimension of a crossing object.

   ---

(12) INTERNATIONAL APPLICATION PUBLISHED UNDER THE PATENT COOPERATION TREATY (PCT)

(19) World Intellectual Property Organization
International Bureau

(43) International Publication Date
17 December 2015 (17.12.2015)

WIPO | PCT

(10) International Publication Number
WO 2015/189847 A1

(51) International Patent Classification:
B60W 30/12 (2006.01) *G06K 9/62* (2006.01)
G06K 9/00 (2006.01) *G06T 7/20* (2006.01)
G06K 9/32 (2006.01)

(21) International Application Number:
PCT/IL2015/050590

(22) International Filing Date:
10 June 2015 (10.06.2015)

(25) Filing Language: English

(26) Publication Language: English

(30) Priority Data:
62/010,003 10 June 2014 (10.06.2014) US
62/173,216 9 June 2015 (09.06.2015) US

(71) Applicant: **MOBILEYE VISION TECHNOLOGIES LTD.** [IL/IL]; Hartom 13, 9777513 Jerusalem (IL).

(72) Inventors: **FERENCZ, Andras**; Hartom 13, 9777513 Jerusalem (IL). **REISMAN, Pinchas**; Hartom 13, 9777513 Jerusalem (IL).

(74) Agent: **COHN, Ilan**; Reinhold Cohn And Partners, P.O.Box 13239, 6113102 Tel Aviv (IL).

(81) Designated States *(unless otherwise indicated, for every kind of national protection available)*: AE, AG, AL, AM, AO, AT, AU, AZ, BA, BB, BG, BH, BN, BR, BW, BY, BZ, CA, CH, CL, CN, CO, CR, CU, CZ, DE, DK, DM, DO, DZ, EC, EE, EG, ES, FI, GB, GD, GE, GH, GM, GT, HN, HR, HU, ID, IL, IN, IR, IS, JP, KE, KG, KN, KP, KR, KZ, LA, LC, LK, LR, LS, LU, LY, MA, MD, ME, MG, MK, MN, MW, MX, MY, MZ, NA, NG, NI, NO, NZ, OM, PA, PE, PG, PH, PL, PT, QA, RO, RS, RU, RW, SA, SC, SD, SE, SG, SK, SL, SM, ST, SV, SY, TH, TJ, TM, TN, TR, TT, TZ, UA, UG, US, UZ, VC, VN, ZA, ZM, ZW.

(84) Designated States *(unless otherwise indicated, for every kind of regional protection available)*: ARIPO (BW, GH, GM, KE, LR, LS, MW, MZ, NA, RW, SD, SL, ST, SZ, TZ, UG, ZM, ZW), Eurasian (AM, AZ, BY, KG, KZ, RU, TJ, TM), European (AL, AT, BE, BG, CH, CY, CZ, DE, DK, EE, ES, FI, FR, GB, GR, HR, HU, IE, IS, IT, LT, LU, LV, MC, MK, MT, NL, NO, PL, PT, RO, RS, SE, SI, SK, SM, TR), OAPI (BF, BJ, CF, CG, CI, CM, GA, GN, GQ, GW, KM, ML, MR, NE, SN, TD, TG).

Published:
— *with international search report (Art. 21(3))*

(54) Title: TOP-DOWN REFINEMENT IN LANE MARKING NAVIGATION

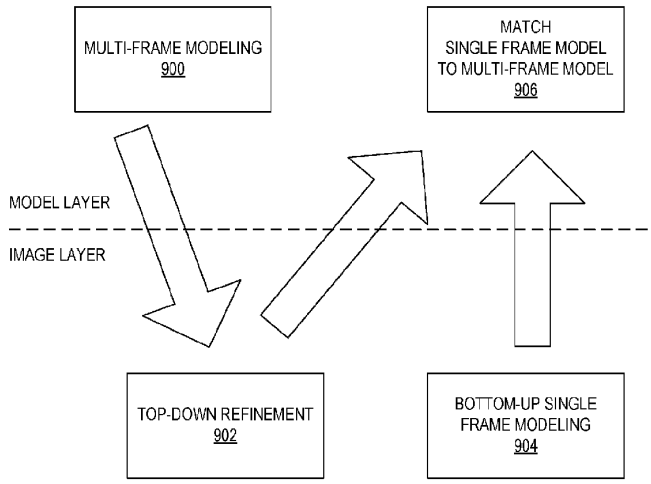

FIG. 9

(57) Abstract: Systems and methods use cameras to provide autonomous navigation features. In one implementation, top-down refinement in lane marking navigation is provided. The system may include one or more memories storing instructions and one or more processors configured to execute the instructions to cause the system to receive from one or more cameras one or more images of a roadway in a vicinity of a vehicle, the roadway comprising a lane marking comprising a dashed line, update a model of the lane marking based on odometry of the one or more cameras relative to the roadway, refine the updated model of the lane marking based on an appearance of dashes derived from the received one or more images and a spacing between dashes derived from the received one or more images, and cause one or more navigational responses in the vehicle based on the refinement of the updated model.

WO 2015/189847 A1

Top-Down Refinement in Lane Marking Navigation

Cross Reference to Related Applications

[0001] This application claims the benefit of U.S. Provisional Patent Application No. 62/010,003, filed June 10, 2014, and U.S. Provisional Patent Application No. 62/173,216, filed June 9, 2015, the entireties of which are incorporated herein by reference.

Field of the Disclosure

[0002] This relates generally to autonomous driving and/or driver assist technology and, more specifically, to systems and methods that use cameras to provide autonomous driving and/or driver assist technology features.

Background

[0003] As technology continues to advance, the goal of a fully autonomous vehicle that is capable of navigating on roadways is on the horizon. Primarily, an autonomous vehicle may be able to identify its environment and navigate without input from a human operator. Autonomous vehicles may also take into account a variety of factors and make appropriate decisions based on those factors to safely and accurately reach an intended destination. For example, various objects – such as other vehicles and pedestrians – are encountered when a vehicle typically travels a roadway. Autonomous driving systems may recognize these objects in a vehicle's environment and take appropriate and timely action to avoid collisions. Additionally, autonomous driving systems may identify other indicators – such as traffic signals, traffic signs, and lane markings – that regulate vehicle movement (e.g., when the vehicle must stop and may go, a speed at which the vehicle must not exceed, where the vehicle must be positioned on the roadway, etc.). Autonomous driving systems may need to determine when a vehicle should change lanes, turn at intersections, change roadways, etc. As is evident from these examples,

IPR2025-01035
Tesla EX1002 Page 2539

many factors may need to be addressed in order to provide an autonomous vehicle that is capable of navigating safely and accurately.

Summary

[0004] Embodiments consistent with the present disclosure provide systems and methods for autonomous vehicle navigation. The disclosed embodiments may use cameras to provide autonomous vehicle navigation features. For example, consistent with the disclosed embodiments, the disclosed systems may include one, two, or more cameras that monitor the environment of a vehicle and cause a navigational response based on an analysis of images captured by one or more of the cameras.

[0005] Consistent with a disclosed embodiment, top-down refinement in lane marking navigation is provided for a computer system. The system may include one or more memories storing instructions and one or more processors. The one or more processors may be configured to execute the instructions to cause the system to receive from one or more cameras one or more images of a roadway in a vicinity of a vehicle, the roadway comprising a lane marking comprising a dashed line, update a model of the lane marking based on odometry of the one or more cameras relative to the roadway, refine the updated model of the lane marking based on an appearance of dashes derived from the received one or more images and a spacing between dashes derived from the received one or more images, and cause one or more navigational responses in the vehicle based on the refinement of the updated model.

[0006] Consistent with another disclosed embodiment, top-down refinement in lane marking navigation is provided for a vehicle. The vehicle may include a body, one or more cameras configured to acquire one or more images of a roadway in a vicinity of a vehicle, the roadway comprising a lane marking comprising a dashed line, one or more memories storing instructions, and one or more processors. The one or more processors may be configured to execute the instructions to cause the vehicle to receive from one or more cameras the one or more acquired images of the roadway, update a model of the lane marking based on odometry of the one or more cameras relative to the roadway, refine the updated model of the lane marking based on an appearance of dashes derived from the received one or more images and a spacing between dashes derived from the received one or more images, and cause one or more navigational responses in the vehicle based on the refinement of the updated model.

[0007] Consistent with another disclosed embodiment, a method of top-down refinement in lane marking navigation is provided. The method may include receiving, by one or more processors, from one or more cameras one or more images of a roadway in a vicinity of a vehicle, the roadway comprising a lane marking comprising a dashed line, updating, by one or more processors, a model of the lane marking based on odometry of the one or more cameras relative to the roadway, refining, by one or more processors, the updated model of the lane marking based on an appearance of dashes derived from the received one or more images and a spacing between dashes derived from the received one or more images, and causing, by one or more processors, one or more navigational responses in the vehicle based on the refinement of the updated model.

Brief Description of the Drawings

[0008] FIG. 1 is a diagrammatic representation of an exemplary system consistent with the disclosed embodiments.

[0009] FIG. 2A is a diagrammatic side view representation of an exemplary vehicle including a system consistent with the disclosed embodiments.

[0010] FIG. 2B is a diagrammatic top view representation of the vehicle and system shown in FIG. 2A consistent with the disclosed embodiments.

[0011] FIG. 2C is a diagrammatic top view representation of another embodiment of a vehicle including a system consistent with the disclosed embodiments.

[0012] FIG. 2D is a diagrammatic top view representation of yet another embodiment of a vehicle including a system consistent with the disclosed embodiments.

[0013] FIG. 2E is a diagrammatic top view representation of yet another embodiment of a vehicle including a system consistent with the disclosed embodiments.

[0014] FIG. 2F is a diagrammatic representation of exemplary vehicle control systems consistent with the disclosed embodiments.

[0015] FIG. 3A is a diagrammatic representation of an interior of a vehicle including a rearview mirror and a user interface for a vehicle imaging system consistent with the disclosed embodiments.

[0016] FIG. 3B is an illustration of an example of a camera mount that is configured to be positioned behind a rearview mirror and against a vehicle windshield consistent with the disclosed embodiments.

[0017] FIG. 3C is an illustration of the camera mount shown in FIG. 3B from a different perspective consistent with the disclosed embodiments.

[0018] FIG. 3D is an illustration of an example of a camera mount that is configured to be positioned behind a rearview mirror and against a vehicle windshield consistent with the disclosed embodiments.

[0019] FIG. 4 is an exemplary block diagram of a memory configured to store instructions for performing one or more operations consistent with the disclosed embodiments.

[0020] FIG. 5A is a flowchart showing an exemplary process for causing one or more navigational responses based on monocular image analysis consistent with disclosed embodiments.

[0021] FIG. 5B is a flowchart showing an exemplary process for detecting one or more vehicles and/or pedestrians in a set of images consistent with the disclosed embodiments.

[0022] FIG. 5C is a flowchart showing an exemplary process for detecting road marks and/or lane geometry information in a set of images consistent with the disclosed embodiments.

[0023] FIG. 5D is a flowchart showing an exemplary process for detecting traffic lights in a set of images consistent with the disclosed embodiments.

[0024] FIG. 5E is a flowchart showing an exemplary process for causing one or more navigational responses based on a vehicle path consistent with the disclosed embodiments.

[0025] FIG. 5F is a flowchart showing an exemplary process for determining whether a leading vehicle is changing lanes consistent with the disclosed embodiments.

[0026] FIG. 6 is a flowchart showing an exemplary process for causing one or more navigational responses based on stereo image analysis consistent with the disclosed embodiments.

[0027] FIG. 7 is a flowchart showing an exemplary process for causing one or more navigational responses based on an analysis of three sets of images consistent with the disclosed embodiments.

[0028] FIGS. 8A–8D are diagrammatic representations of exemplary lane detection analyses without top-down refinement.

[0029] FIG. 9 is a diagrammatic representation of an exemplary top-down refinement architecture consistent with the disclosed embodiments.

[0030] FIG. 10A is a diagrammatic representation of the memory of an exemplary navigation system consistent with the disclosed embodiments.

[0031] FIG. 10B is a flowchart of an exemplary process for navigating a vehicle using top-down refinement consistent with the disclosed embodiments.

[0032] FIG. 11A is a flowchart of an exemplary process for implementing top-down refinement consistent with the disclosed embodiments.

[0033] FIGS. 11B-11N are diagrammatic representations of a top-down refinement implementation consistent with the disclosed embodiments.

Detailed Description

[0034] The following detailed description refers to the accompanying drawings. Wherever possible, the same reference numbers are used in the drawings and the following description to refer to the same or similar parts. While several illustrative embodiments are described herein, modifications, adaptations and other implementations are possible. For example, substitutions, additions or modifications may be made to the components illustrated in the drawings, and the illustrative methods described herein may be modified by substituting, reordering, removing, or adding steps to the disclosed methods. Accordingly, the following detailed description is not limited to the disclosed embodiments and examples. Instead, the proper scope is defined by the appended claims.

[0035] Disclosed embodiments provide systems and methods that use cameras to provide autonomous navigation and/or driver assist technology features. Driver assist technology refers to any suitable technology to assist drivers in the navigation of their vehicles, such as LKA (lane keeping assist) and LDW (lane departure warning), as opposed to fully autonomous driving. In various embodiments, the system may include one, two or more cameras that monitor the environment of a vehicle. In one embodiment, the system may provide top-down refinement in lane marking navigation.

[0036] FIG. 1 is a block diagram representation of a system 100 consistent with the exemplary disclosed embodiments. System 100 may include various components depending on the requirements of a particular implementation. In some embodiments, system 100 may include a processing unit 110, an image acquisition unit 120, a position sensor 130, one or more memory units 140, 150, a map database 160, and a user interface 170. Processing unit 110 may include one or more processing devices. In some embodiments, processing unit 110 may include an application processor 180, an image processor 190, or any other suitable processing device. Similarly, image acquisition unit 120 may include any number of image acquisition devices and components depending on the requirements of a particular application. In some embodiments, image acquisition unit 120 may include one or more image capture devices (e.g., cameras), such as image capture device 122, image capture device 124, and image capture device 126. System 100 may also include a data interface 128 communicatively connecting processing unit 110 to image acquisition device 120. For example, data interface 128 may include any wired and/or wireless link or links for transmitting image data acquired by image accusation device 120 to processing unit 110.

[0037] Both application processor 180 and image processor 190 may include various types of processing devices. For example, either or both of application processor 180 and image processor 190 may include one or more microprocessors, preprocessors (such as image preprocessors), graphics processors, central processing units (CPUs), support circuits, digital signal processors, integrated circuits, memory, or any other types of devices suitable for running applications and for image processing and analysis. In some embodiments, application processor 180 and/or image processor 190 may include any type of single or multi-core processor, mobile device microcontroller, central processing unit, etc. Various processing devices may be used, including, for example, processors available from manufacturers such as Intel®, AMD®, etc. and may include various architectures (e.g., x86 processor, ARM®, etc.).

[0038] In some embodiments, application processor 180 and/or image processor 190 may include any of the EyeQ series of processor chips available from Mobileye®. These processor designs each include multiple processing units with local memory and instruction sets. Such processors may include video inputs for receiving image data from multiple image sensors and may also include video out capabilities. In one example, the EyeQ2® uses 90 nm-micron technology operating at 332 Mhz. The EyeQ2® architecture has two floating point, hyper-thread 32-bit RISC CPUs (MIPS32® 34K® cores), five Vision Computing Engines (VCE), three Vector Microcode Processors (VMP®), Denali 64-bit Mobile DDR Controller, 128-bit internal Sonics

Interconnect, dual 16-bit Video input and 18-bit Video output controllers, 16 channels DMA and several peripherals. The MIPS34K CPU manages the five VCEs, three VMP.TM. and the DMA, the second MIPS34K CPU and the multi-channel DMA as well as the other peripherals. The five VCEs, three VMP® and the MIPS34K CPU can perform intensive vision computations required by multi-function bundle applications. In another example, the EyeQ3®, which is a third generation processor and is six times more powerful that the EyeQ2®, may be used in the disclosed embodiments.

[0039] While FIG. 1 depicts two separate processing devices included in processing unit 110, more or fewer processing devices may be used. For example, in some embodiments, a single processing device may be used to accomplish the tasks of application processor 180 and image processor 190. In other embodiments, these tasks may be performed by more than two processing devices.

[0040] Processing unit 110 may comprise various types of devices. For example, processing unit 110 may include various devices, such as a controller, an image preprocessor, a central processing unit (CPU), support circuits, digital signal processors, integrated circuits, memory, or any other types of devices for image processing and analysis. The image preprocessor may include a video processor for capturing, digitizing and processing the imagery from the image sensors. The CPU may comprise any number of microcontrollers or microprocessors. The support circuits may be any number of circuits generally well known in the art, including cache, power supply, clock and input-output circuits. The memory may store software that, when executed by the processor, controls the operation of the system. The memory may include databases and image processing software. The memory may comprise any number of random access memories, read only memories, flash memories, disk drives, optical storage, tape storage, removable storage and other types of storage. In one instance, the memory may be separate from the processing unit 110. In another instance, the memory may be integrated into the processing unit 110.

[0041] Each memory 140, 150 may include software instructions that when executed by a processor (e.g., application processor 180 and/or image processor 190), may control operation of various aspects of system 100. These memory units may include various databases and image processing software. The memory units may include random access memory, read only memory, flash memory, disk drives, optical storage, tape storage, removable storage and/or any other types of storage. In some embodiments, memory units 140, 150 may be separate from the

application processor 180 and/or image processor 190. In other embodiments, these memory units may be integrated into application processor 180 and/or image processor 190.

[0042] Position sensor 130 may include any type of device suitable for determining a location associated with at least one component of system 100. In some embodiments, position sensor 130 may include a GPS receiver. Such receivers can determine a user position and velocity by processing signals broadcasted by global positioning system satellites. Position information from position sensor 130 may be made available to application processor 180 and/or image processor 190.

[0043] User interface 170 may include any device suitable for providing information to or for receiving inputs from one or more users of system 100. In some embodiments, user interface 170 may include user input devices, including, for example, a touchscreen, microphone, keyboard, pointer devices, track wheels, cameras, knobs, buttons, etc. With such input devices, a user may be able to provide information inputs or commands to system 100 by typing instructions or information, providing voice commands, selecting menu options on a screen using buttons, pointers, or eye-tracking capabilities, or through any other suitable techniques for communicating information to system 100.

[0044] User interface 170 may be equipped with one or more processing devices configured to provide and receive information to or from a user and process that information for use by, for example, application processor 180. In some embodiments, such processing devices may execute instructions for recognizing and tracking eye movements, receiving and interpreting voice commands, recognizing and interpreting touches and/or gestures made on a touchscreen, responding to keyboard entries or menu selections, etc. In some embodiments, user interface 170 may include a display, speaker, tactile device, and/or any other devices for providing output information to a user.

[0045] Map database 160 may include any type of database for storing map data useful to system 100. In some embodiments, map database 160 may include data relating to the position, in a reference coordinate system, of various items, including roads, water features, geographic features, businesses, points of interest, restaurants, gas stations, etc. Map database 160 may store not only the locations of such items, but also descriptors relating to those items, including, for example, names associated with any of the stored features. In some embodiments, map database 160 may be physically located with other components of system 100. Alternatively or additionally, map database 160 or a portion thereof may be located remotely with respect to other components of system 100 (e.g., processing unit 110). In such embodiments, information

from map database 160 may be downloaded over a wired or wireless data connection to a network (e.g., over a cellular network and/or the Internet, etc.).

[0046] Image capture devices 122, 124, and 126 may each include any type of device suitable for capturing at least one image from an environment. Moreover, any number of image capture devices may be used to acquire images for input to the image processor. Some embodiments may include only a single image capture device, while other embodiments may include two, three, or even four or more image capture devices. Image capture devices 122, 124, and 126 will be further described with reference to FIGS. 2B-2E, below.

[0047] System 100, or various components thereof, may be incorporated into various different platforms. In some embodiments, system 100 may be included on a vehicle 200, as shown in FIG. 2A. For example, vehicle 200 may be equipped with a processing unit 110 and any of the other components of system 100, as described above relative to FIG. 1. While in some embodiments vehicle 200 may be equipped with only a single image capture device (e.g., camera), in other embodiments, such as those discussed in connection with FIGS. 2B-2E, multiple image capture devices may be used. For example, either of image capture devices 122 and 124 of vehicle 200, as shown in FIG. 2A, may be part of an ADAS (Advanced Driver Assistance Systems) imaging set.

[0048] The image capture devices included on vehicle 200 as part of the image acquisition unit 120 may be positioned at any suitable location. In some embodiments, as shown in FIGS. 2A-2E and 3A-3C, image capture device 122 may be located in the vicinity of the rearview mirror. This position may provide a line of sight similar to that of the driver of vehicle 200, which may aid in determining what is and is not visible to the driver. Image capture device 122 may be positioned at any location near the rearview mirror, but placing image capture device 122 on the driver side of the mirror may further aid in obtaining images representative of the driver's field of view and/or line of sight.

[0049] Other locations for the image capture devices of image acquisition unit 120 may also be used. For example, image capture device 124 may be located on or in a bumper of vehicle 200. Such a location may be especially suitable for image capture devices having a wide field of view. The line of sight of bumper-located image capture devices can be different from that of the driver and, therefore, the bumper image capture device and driver may not always see the same objects. The image capture devices (e.g., image capture devices 122, 124, and 126) may also be located in other locations. For example, the image capture devices may be located on or in one or both of the side mirrors of vehicle 200, on the roof of vehicle 200, on the hood of

vehicle 200, on the trunk of vehicle 200, on the sides of vehicle 200, mounted on, positioned behind, or positioned in front of any of the windows of vehicle 200, and mounted in or near light figures on the front and/or back of vehicle 200, etc.

[0050] In addition to image capture devices, vehicle 200 may include various other components of system 100. For example, processing unit 110 may be included on vehicle 200 either integrated with or separate from an engine control unit (ECU) of the vehicle. Vehicle 200 may also be equipped with a position sensor 130, such as a GPS receiver and may also include a map database 160 and memory units 140 and 150.

[0051] FIG. 2A is a diagrammatic side view representation of an exemplary vehicle imaging system consistent with the disclosed embodiments. FIG. 2B is a diagrammatic top view illustration of the embodiment shown in FIG. 2A. As illustrated in FIG. 2B, the disclosed embodiments may include a vehicle 200 including in its body a system 100 with a first image capture device 122 positioned in the vicinity of the rearview mirror and/or near the driver of vehicle 200, a second image capture device 124 positioned on or in a bumper region (e.g., one of bumper regions 210) of vehicle 200, and a processing unit 110.

[0052] As illustrated in FIG. 2C, image capture devices 122 and 124 may both be positioned in the vicinity of the rearview mirror and/or near the driver of vehicle 200. Additionally, while two image capture devices 122 and 124 are shown in FIGS. 2B and 2C, it should be understood that other embodiments may include more than two image capture devices. For example, in the embodiments shown in FIGS. 2D and 2E, first, second, and third image capture devices 122, 124, and 126, are included in the system 100 of vehicle 200.

[0053] As illustrated in FIG. 2D, image capture device 122 may be positioned in the vicinity of the rearview mirror and/or near the driver of vehicle 200, and image capture devices 124 and 126 may be positioned on or in a bumper region (e.g., one of bumper regions 210) of vehicle 200. And as shown in FIG. 2E, image capture devices 122, 124, and 126 may be positioned in the vicinity of the rearview mirror and/or near the driver seat of vehicle 200. The disclosed embodiments are not limited to any particular number and configuration of the image capture devices, and the image capture devices may be positioned in any appropriate location within and/or on vehicle 200.

[0054] It is to be understood that the disclosed embodiments are not limited to vehicles and could be applied in other contexts, including portable devices such as smartphones and wearable accessories such as helmets and self-contained mountable units. It is also to be

understood that disclosed embodiments are not limited to a particular type of vehicle 200 and may be applicable to all types of vehicles including automobiles, trucks, trailers, motorcycles, bicycles, self-balancing transport devices and other types of vehicles.

[0055] The first image capture device 122 may include any suitable type of image capture device. Image capture device 122 may include an optical axis. In one instance, the image capture device 122 may include an Aptina M9V024 WVGA sensor with a global shutter. In other embodiments, image capture device 122 may provide a resolution of 1280x960 pixels and may include a rolling shutter. Image capture device 122 may include various optical elements. In some embodiments one or more lenses may be included, for example, to provide a desired focal length and field of view for the image capture device. In some embodiments, image capture device 122 may be associated with a 6 mm lens or a 12 mm lens. In some embodiments, image capture device 122 may be configured to capture images having a desired field-of-view (FOV) 202, as illustrated in FIG. 2D. For example, image capture device 122 may be configured to have a regular FOV, such as within a range of 40 degrees to 56 degrees, including a 46 degree FOV, 50 degree FOV, 52 degree FOV, or greater. Alternatively, image capture device 122 may be configured to have a narrow FOV in the range of 23 to 40 degrees, such as a 28 degree FOV or 36 degree FOV. In addition, image capture device 122 may be configured to have a wide FOV in the range of 100 to 180 degrees. In some embodiments, image capture device 122 may include a wide angle bumper camera or one with up to a 180 degree FOV.

[0056] The first image capture device 122 may acquire a plurality of first images relative to a scene associated with the vehicle 200. Each of the plurality of first images may be acquired as a series of image scan lines, which may be captured using a rolling shutter. Each scan line may include a plurality of pixels.

[0057] The first image capture device 122 may have a scan rate associated with acquisition of each of the first series of image scan lines. The scan rate may refer to a rate at which an image sensor can acquire image data associated with each pixel included in a particular scan line.

[0058] Image capture devices 122, 124, and 126 may contain any suitable type and number of image sensors, including CCD sensors or CMOS sensors, for example. In one embodiment, a CMOS image sensor may be employed along with a rolling shutter, such that each pixel in a row is read one at a time, and scanning of the rows proceeds on a row-by-row basis until an

entire image frame has been captured. In some embodiments, the rows may be captured sequentially from top to bottom relative to the frame.

[0059] The use of a rolling shutter may result in pixels in different rows being exposed and captured at different times, which may cause skew and other image artifacts in the captured image frame. On the other hand, when the image capture device 122 is configured to operate with a global or synchronous shutter, all of the pixels may be exposed for the same amount of time and during a common exposure period. As a result, the image data in a frame collected from a system employing a global shutter represents a snapshot of the entire FOV (such as FOV 202) at a particular time. In contrast, in a rolling shutter application, each row in a frame is exposed and data is capture at different times. Thus, moving objects may appear distorted in an image capture device having a rolling shutter. This phenomenon will be described in greater detail below.

[0060] The second image capture device 124 and the third image capturing device 126 may be any type of image capture device. Like the first image capture device 122, each of image capture devices 124 and 126 may include an optical axis. In one embodiment, each of image capture devices 124 and 126 may include an Aptina M9V024 WVGA sensor with a global shutter. Alternatively, each of image capture devices 124 and 126 may include a rolling shutter. Like image capture device 122, image capture devices 124 and 126 may be configured to include various lenses and optical elements. In some embodiments, lenses associated with image capture devices 124 and 126 may provide FOVs (such as FOVs 204 and 206) that are the same as, or narrower than, a FOV (such as FOV 202) associated with image capture device 122. For example, image capture devices 124 and 126 may have FOVs of 40 degrees, 30 degrees, 26 degrees, 23 degrees, 20 degrees, or less.

[0061] Image capture devices 124 and 126 may acquire a plurality of second and third images relative to a scene associated with the vehicle 200. Each of the plurality of second and third images may be acquired as a second and third series of image scan lines, which may be captured using a rolling shutter. Each scan line or row may have a plurality of pixels. Image capture devices 124 and 126 may have second and third scan rates associated with acquisition of each of image scan lines included in the second and third series.

[0062] Each image capture device 122, 124, and 126 may be positioned at any suitable position and orientation relative to vehicle 200. The relative positioning of the image capture devices 122, 124, and 126 may be selected to aid in fusing together the information acquired from the image capture devices. For example, in some embodiments, a FOV (such as FOV 204)

associated with image capture device 124 may overlap partially or fully with a FOV (such as FOV 202) associated with image capture device 122 and a FOV (such as FOV 206) associated with image capture device 126.

[0063] Image capture devices 122, 124, and 126 may be located on vehicle 200 at any suitable relative heights. In one instance, there may be a height difference between the image capture devices 122, 124, and 126, which may provide sufficient parallax information to enable stereo analysis. For example, as shown in FIG. 2A, the two image capture devices 122 and 124 are at different heights. There may also be a lateral displacement difference between image capture devices 122, 124, and 126, giving additional parallax information for stereo analysis by processing unit 110, for example. The difference in the lateral displacement may be denoted by d_x, as shown in FIGS. 2C and 2D. In some embodiments, fore or aft displacement (e.g., range displacement) may exist between image capture devices 122, 124, and 126. For example, image capture device 122 may be located 0.5 to 2 meters or more behind image capture device 124 and/or image capture device 126. This type of displacement may enable one of the image capture devices to cover potential blind spots of the other image capture device(s).

[0064] Image capture devices 122 may have any suitable resolution capability (e.g., number of pixels associated with the image sensor), and the resolution of the image sensor(s) associated with the image capture device 122 may be higher, lower, or the same as the resolution of the image sensor(s) associated with image capture devices 124 and 126. In some embodiments, the image sensor(s) associated with image capture device 122 and/or image capture devices 124 and 126 may have a resolution of 640x480, 1024x768, 1280x960, or any other suitable resolution.

[0065] The frame rate (e.g., the rate at which an image capture device acquires a set of pixel data of one image frame before moving on to capture pixel data associated with the next image frame) may be controllable. The frame rate associated with image capture device 122 may be higher, lower, or the same as the frame rate associated with image capture devices 124 and 126. The frame rate associated with image capture devices 122, 124, and 126 may depend on a variety of factors that may affect the timing of the frame rate. For example, one or more of image capture devices 122, 124, and 126 may include a selectable pixel delay period imposed before or after acquisition of image data associated with one or more pixels of an image sensor in image capture device 122, 124, and/or 126. Generally, image data corresponding to each pixel may be acquired according to a clock rate for the device (e.g., one pixel per clock cycle). Additionally, in embodiments including a rolling shutter, one or more of image capture devices

122, 124, and 126 may include a selectable horizontal blanking period imposed before or after acquisition of image data associated with a row of pixels of an image sensor in image capture device 122, 124, and/or 126. Further, one or more of image capture devices 122, 124, and/or 126 may include a selectable vertical blanking period imposed before or after acquisition of image data associated with an image frame of image capture device 122, 124, and 126.

[0066] These timing controls may enable synchronization of frame rates associated with image capture devices 122, 124, and 126, even where the line scan rates of each are different. Additionally, as will be discussed in greater detail below, these selectable timing controls, among other factors (e.g., image sensor resolution, maximum line scan rates, etc.) may enable synchronization of image capture from an area where the FOV of image capture device 122 overlaps with one or more FOVs of image capture devices 124 and 126, even where the field of view of image capture device 122 is different from the FOVs of image capture devices 124 and 126.

[0067] Frame rate timing in image capture device 122, 124, and 126 may depend on the resolution of the associated image sensors. For example, assuming similar line scan rates for both devices, if one device includes an image sensor having a resolution of 640x480 and another device includes an image sensor with a resolution of 1280x960, then more time will be required to acquire a frame of image data from the sensor having the higher resolution.

[0068] Another factor that may affect the timing of image data acquisition in image capture devices 122, 124, and 126 is the maximum line scan rate. For example, acquisition of a row of image data from an image sensor included in image capture device 122, 124, and 126 will require some minimum amount of time. Assuming no pixel delay periods are added, this minimum amount of time for acquisition of a row of image data will be related to the maximum line scan rate for a particular device. Devices that offer higher maximum line scan rates have the potential to provide higher frame rates than devices with lower maximum line scan rates. In some embodiments, one or more of image capture devices 124 and 126 may have a maximum line scan rate that is higher than a maximum line scan rate associated with image capture device 122. In some embodiments, the maximum line scan rate of image capture device 124 and/or 126 may be 1.25, 1.5, 1.75, or 2 times or more than a maximum line scan rate of image capture device 122.

[0069] In another embodiment, image capture devices 122, 124, and 126 may have the same maximum line scan rate, but image capture device 122 may be operated at a scan rate less than or equal to its maximum scan rate. The system may be configured such that one or

more of image capture devices 124 and 126 operate at a line scan rate that is equal to the line scan rate of image capture device 122. In other instances, the system may be configured such that the line scan rate of image capture device 124 and/or image capture device 126 may be 1.25, 1.5, 1.75, or 2 times or more than the line scan rate of image capture device 122.

[0070] In some embodiments, image capture devices 122, 124, and 126 may be asymmetric. That is, they may include cameras having different fields of view (FOV) and focal lengths. The fields of view of image capture devices 122, 124, and 126 may include any desired area relative to an environment of vehicle 200, for example. In some embodiments, one or more of image capture devices 122, 124, and 126 may be configured to acquire image data from an environment in front of vehicle 200, behind vehicle 200, to the sides of vehicle 200, or combinations thereof.

[0071] Further, the focal length associated with each image capture device 122, 124, and/or 126 may be selectable (e.g., by inclusion of appropriate lenses etc.) such that each device acquires images of objects at a desired distance range relative to vehicle 200. For example, in some embodiments image capture devices 122, 124, and 126 may acquire images of close-up objects within a few meters from the vehicle. Image capture devices 122, 124, and 126 may also be configured to acquire images of objects at ranges more distant from the vehicle (e.g., 25 m, 50 m, 100 m, 150 m, or more). Further, the focal lengths of image capture devices 122, 124, and 126 may be selected such that one image capture device (e.g., image capture device 122) can acquire images of objects relatively close to the vehicle (e.g., within 10 m or within 20 m) while the other image capture devices (e.g., image capture devices 124 and 126) can acquire images of more distant objects (e.g., greater than 20 m, 50 m, 100 m, 150 m, etc.) from vehicle 200.

[0072] According to some embodiments, the FOV of one or more image capture devices 122, 124, and 126 may have a wide angle. For example, it may be advantageous to have a FOV of 140 degrees, especially for image capture devices 122, 124, and 126 that may be used to capture images of the area in the vicinity of vehicle 200. For example, image capture device 122 may be used to capture images of the area to the right or left of vehicle 200 and, in such embodiments, it may be desirable for image capture device 122 to have a wide FOV (e.g., at least 140 degrees).

[0073] The field of view associated with each of image capture devices 122, 124, and 126 may depend on the respective focal lengths. For example, as the focal length increases, the corresponding field of view decreases.

[0074] Image capture devices 122, 124, and 126 may be configured to have any suitable fields of view. In one particular example, image capture device 122 may have a horizontal FOV of 46 degrees, image capture device 124 may have a horizontal FOV of 23 degrees, and image capture device 126 may have a horizontal FOV in between 23 and 46 degrees. In another instance, image capture device 122 may have a horizontal FOV of 52 degrees, image capture device 124 may have a horizontal FOV of 26 degrees, and image capture device 126 may have a horizontal FOV in between 26 and 52 degrees. In some embodiments, a ratio of the FOV of image capture device 122 to the FOVs of image capture device 124 and/or image capture device 126 may vary from 1.5 to 2.0. In other embodiments, this ratio may vary between 1.25 and 2.25.

[0075] System 100 may be configured so that a field of view of image capture device 122 overlaps, at least partially or fully, with a field of view of image capture device 124 and/or image capture device 126. In some embodiments, system 100 may be configured such that the fields of view of image capture devices 124 and 126, for example, fall within (e.g., are narrower than) and share a common center with the field of view of image capture device 122. In other embodiments, the image capture devices 122, 124, and 126 may capture adjacent FOVs or may have partial overlap in their FOVs. In some embodiments, the fields of view of image capture devices 122, 124, and 126 may be aligned such that a center of the narrower FOV image capture devices 124 and/or 126 may be located in a lower half of the field of view of the wider FOV device 122.

[0076] FIG. 2F is a diagrammatic representation of exemplary vehicle control systems, consistent with the disclosed embodiments. As indicated in FIG. 2F, vehicle 200 may include throttling system 220, braking system 230, and steering system 240. System 100 may provide inputs (e.g., control signals) to one or more of throttling system 220, braking system 230, and steering system 240 over one or more data links (e.g., any wired and/or wireless link or links for transmitting data). For example, based on analysis of images acquired by image capture devices 122, 124, and/or 126, system 100 may provide control signals to one or more of throttling system 220, braking system 230, and steering system 240 to navigate vehicle 200 (e.g., by causing an acceleration, a turn, a lane shift, etc.). Further, system 100 may receive inputs from one or more of throttling system 220, braking system 230, and steering system 24 indicating operating conditions of vehicle 200 (e.g., speed, whether vehicle 200 is braking and/or turning, etc.). Further details are provided in connection with FIGS. 4-7, below.

[0077] As shown in FIG. 3A, vehicle 200 may also include a user interface 170 for interacting with a driver or a passenger of vehicle 200. For example, user interface 170 in a vehicle application may include a touch screen 320, knobs 330, buttons 340, and a microphone 350. A driver or passenger of vehicle 200 may also use handles (e.g., located on or near the steering column of vehicle 200 including, for example, turn signal handles), buttons (e.g., located on the steering wheel of vehicle 200), and the like, to interact with system 100. In some embodiments, microphone 350 may be positioned adjacent to a rearview mirror 310. Similarly, in some embodiments, image capture device 122 may be located near rearview mirror 310. In some embodiments, user interface 170 may also include one or more speakers 360 (e.g., speakers of a vehicle audio system). For example, system 100 may provide various notifications (e.g., alerts) via speakers 360.

[0078] FIGS. 3B-3D are illustrations of an exemplary camera mount 370 configured to be positioned behind a rearview mirror (e.g., rearview mirror 310) and against a vehicle windshield, consistent with disclosed embodiments. As shown in FIG. 3B, camera mount 370 may include image capture devices 122, 124, and 126. Image capture devices 124 and 126 may be positioned behind a glare shield 380, which may be flush against the vehicle windshield and include a composition of film and/or anti-reflective materials. For example, glare shield 380 may be positioned such that it aligns against a vehicle windshield having a matching slope. In some embodiments, each of image capture devices 122, 124, and 126 may be positioned behind glare shield 380, as depicted, for example, in FIG. 3D. The disclosed embodiments are not limited to any particular configuration of image capture devices 122, 124, and 126, camera mount 370, and glare shield 380. FIG. 3C is an illustration of camera mount 370 shown in FIG. 3B from a front perspective.

[0079] As will be appreciated by a person skilled in the art having the benefit of this disclosure, numerous variations and/or modifications may be made to the foregoing disclosed embodiments. For example, not all components are essential for the operation of system 100. Further, any component may be located in any appropriate part of system 100 and the components may be rearranged into a variety of configurations while providing the functionality of the disclosed embodiments. Therefore, the foregoing configurations are examples and, regardless of the configurations discussed above, system 100 can provide a wide range of functionality to analyze the surroundings of vehicle 200 and navigate vehicle 200 in response to the analysis.

[0080] As discussed below in further detail and consistent with various disclosed embodiments, system 100 may provide a variety of features related to autonomous driving and/or driver assist technology. For example, system 100 may analyze image data, position data (e.g., GPS location information), map data, speed data, and/or data from sensors included in vehicle 200. System 100 may collect the data for analysis from, for example, image acquisition unit 120, position sensor 130, and other sensors. Further, system 100 may analyze the collected data to determine whether or not vehicle 200 should take a certain action, and then automatically take the determined action without human intervention. For example, when vehicle 200 navigates without human intervention, system 100 may automatically control the braking, acceleration, and/or steering of vehicle 200 (e.g., by sending control signals to one or more of throttling system 220, braking system 230, and steering system 240). Further, system 100 may analyze the collected data and issue warnings and/or alerts to vehicle occupants based on the analysis of the collected data.

[0081] Further, consistent with disclosed embodiments, the functionality provided by system 100 may cause vehicle 200 to take different actions to navigate vehicle 200 within a lane and/or relative to other vehicles and/or objects. For example, system 100 may adjust the positioning of vehicle 200 relative to a lane within which vehicle 200 is traveling and/or relative to objects positioned near vehicle 200, select a particular lane for vehicle 200 to use while traveling, and take action in response to an encroaching vehicle, such as a vehicle attempting to move into the lane within which vehicle 200 is traveling. Additionally, system 100 may control the speed of vehicle 200 in different scenarios, such as when vehicle 200 is making a turn. System 100 may further cause vehicle 200 to mimic the actions of a leading vehicle or monitor a target vehicle and navigate vehicle 200 so that it passes the target vehicle. Additional details regarding the various embodiments that are provided by system 100 are provided below.

[0082] Forward-Facing Multi-Imaging System

[0083] As discussed above, system 100 may provide drive assist functionality that uses a multi-camera system. The multi-camera system may use one or more cameras facing in the forward direction of a vehicle. In other embodiments, the multi-camera system may include one or more cameras facing to the side of a vehicle or to the rear of the vehicle. In one embodiment, for example, system 100 may use a two-camera imaging system, where a first camera and a second camera (e.g., image capture devices 122 and 124) may be positioned at the front and/or the sides of a vehicle (e.g., vehicle 200). The first camera may have a field of view that is greater than, less than, or partially overlapping with, the field of view of the second camera. In

addition, the first camera may be connected to a first image processor to perform monocular image analysis of images provided by the first camera, and the second camera may be connected to a second image processor to perform monocular image analysis of images provided by the second camera. The outputs (e.g., processed information) of the first and second image processors may be combined. In some embodiments, the second image processor may receive images from both the first camera and second camera to perform stereo analysis. In another embodiment, system 100 may use a three-camera imaging system where each of the cameras has a different field of view. Such a system may, therefore, make decisions based on information derived from objects located at varying distances both forward and to the sides of the vehicle. References to monocular image analysis may refer to instances where image analysis is performed based on images captured from a single point of view (e.g., from a single camera). Stereo image analysis may refer to instances where image analysis is performed based on two or more images captured with one or more variations of an image capture parameter. For example, captured images suitable for performing stereo image analysis may include images captured: from two or more different positions, from different fields of view, using different focal lengths, along with parallax information, etc.

[0084] For example, in one embodiment, system 100 may implement a three camera configuration using image capture devices 122-126. In such a configuration, image capture device 122 may provide a narrow field of view (e.g., 34 degrees, or other values selected from a range of about 20 to 45 degrees, etc.), image capture device 124 may provide a wide field of view (e.g., 150 degrees or other values selected from a range of about 100 to about 180 degrees), and image capture device 126 may provide an intermediate field of view (e.g., 46 degrees or other values selected from a range of about 35 to about 60 degrees). In some embodiments, image capture device 126 may act as a main or primary camera. Image capture devices 122-126 may be positioned behind rearview mirror 310 and positioned substantially side-by-side (e.g., 6 cm apart). Further, in some embodiments, as discussed above, one or more of image capture devices 122-126 may be mounted behind glare shield 380 that is flush with the windshield of vehicle 200. Such shielding may act to minimize the impact of any reflections from inside the car on image capture devices 122-126.

[0085] In another embodiment, as discussed above in connection with FIGS. 3B and 3C, the wide field of view camera (e.g., image capture device 124 in the above example) may be mounted lower than the narrow and main field of view cameras (e.g., image devices 122 and 126 in the above example). This configuration may provide a free line of sight from the wide field

of view camera. To reduce reflections, the cameras may be mounted close to the windshield of vehicle 200, and may include polarizers on the cameras to damp reflected light.

[0086] A three camera system may provide certain performance characteristics. For example, some embodiments may include an ability to validate the detection of objects by one camera based on detection results from another camera. In the three camera configuration discussed above, processing unit 110 may include, for example, three processing devices (e.g., three EyeQ series of processor chips, as discussed above), with each processing device dedicated to processing images captured by one or more of image capture devices 122-126.

[0087] In a three camera system, a first processing device may receive images from both the main camera and the narrow field of view camera, and perform vision processing of the narrow FOV camera to, for example, detect other vehicles, pedestrians, lane marks, traffic signs, traffic lights, and other road objects. Further, the first processing device may calculate a disparity of pixels between the images from the main camera and the narrow camera and create a 3D reconstruction of the environment of vehicle 200. The first processing device may then combine the 3D reconstruction with 3D map data or with 3D information calculated based on information from another camera.

[0088] The second processing device may receive images from main camera and perform vision processing to detect other vehicles, pedestrians, lane marks, traffic signs, traffic lights, and other road objects. Additionally, the second processing device may calculate a camera displacement and, based on the displacement, calculate a disparity of pixels between successive images and create a 3D reconstruction of the scene (e.g., a structure from motion). The second processing device may send the structure from motion based 3D reconstruction to the first processing device to be combined with the stereo 3D images.

[0089] The third processing device may receive images from the wide FOV camera and process the images to detect vehicles, pedestrians, lane marks, traffic signs, traffic lights, and other road objects. The third processing device may further execute additional processing instructions to analyze images to identify objects moving in the image, such as vehicles changing lanes, pedestrians, etc.

[0090] In some embodiments, having streams of image-based information captured and processed independently may provide an opportunity for providing redundancy in the system. Such redundancy may include, for example, using a first image capture device and the images

processed from that device to validate and/or supplement information obtained by capturing and processing image information from at least a second image capture device.

[0091] In some embodiments, system 100 may use two image capture devices (e.g., image capture devices 122 and 124) in providing navigation assistance for vehicle 200 and use a third image capture device (e.g., image capture device 126) to provide redundancy and validate the analysis of data received from the other two image capture devices. For example, in such a configuration, image capture devices 122 and 124 may provide images for stereo analysis by system 100 for navigating vehicle 200, while image capture device 126 may provide images for monocular analysis by system 100 to provide redundancy and validation of information obtained based on images captured from image capture device 122 and/or image capture device 124. That is, image capture device 126 (and a corresponding processing device) may be considered to provide a redundant sub-system for providing a check on the analysis derived from image capture devices 122 and 124 (e.g., to provide an automatic emergency braking (AEB) system).

[0092] One of skill in the art will recognize that the above camera configurations, camera placements, number of cameras, camera locations, etc., are examples only. These components and others described relative to the overall system may be assembled and used in a variety of different configurations without departing from the scope of the disclosed embodiments. Further details regarding usage of a multi-camera system to provide driver assist and/or autonomous vehicle functionality follow below.

[0093] FIG. 4 is an exemplary functional block diagram of memory 140 and/or 150, which may be stored/programmed with instructions for performing one or more operations consistent with the disclosed embodiments. Although the following refers to memory 140, one of skill in the art will recognize that instructions may be stored in memory 140 and/or 150.

[0094] As shown in FIG. 4, memory 140 may store a monocular image analysis module 402, a stereo image analysis module 404, a velocity and acceleration module 406, and a navigational response module 408. The disclosed embodiments are not limited to any particular configuration of memory 140. Further, application processor 180 and/or image processor 190 may execute the instructions stored in any of modules 402-408 included in memory 140. One of skill in the art will understand that references in the following discussions to processing unit 110 may refer to application processor 180 and image processor 190 individually or collectively. Accordingly, steps of any of the following processes may be performed by one or more processing devices.

[0095] In one embodiment, monocular image analysis module 402 may store instructions (such as computer vision software) which, when executed by processing unit 110, performs monocular image analysis of a set of images acquired by one of image capture devices 122, 124, and 126. In some embodiments, processing unit 110 may combine information from a set of images with additional sensory information (e.g., information from radar) to perform the monocular image analysis. As described in connection with FIGS. 5A-5D below, monocular image analysis module 402 may include instructions for detecting a set of features within the set of images, such as lane markings, vehicles, pedestrians, road signs, highway exit ramps, traffic lights, hazardous objects, and any other feature associated with an environment of a vehicle. Based on the analysis, system 100 (e.g., via processing unit 110) may cause one or more navigational responses in vehicle 200, such as a turn, a lane shift, a change in acceleration, and the like, as discussed below in connection with navigational response module 408.

[0096] In one embodiment, stereo image analysis module 404 may store instructions (such as computer vision software) which, when executed by processing unit 110, performs stereo image analysis of first and second sets of images acquired by a combination of image capture devices selected from any of image capture devices 122, 124, and 126. In some embodiments, processing unit 110 may combine information from the first and second sets of images with additional sensory information (e.g., information from radar) to perform the stereo image analysis. For example, stereo image analysis module 404 may include instructions for performing stereo image analysis based on a first set of images acquired by image capture device 124 and a second set of images acquired by image capture device 126. As described in connection with FIG. 6 below, stereo image analysis module 404 may include instructions for detecting a set of features within the first and second sets of images, such as lane markings, vehicles, pedestrians, road signs, highway exit ramps, traffic lights, hazardous objects, and the like. Based on the analysis, processing unit 110 may cause one or more navigational responses in vehicle 200, such as a turn, a lane shift, a change in acceleration, and the like, as discussed below in connection with navigational response module 408.

[0097] In one embodiment, velocity and acceleration module 406 may store software configured to analyze data received from one or more computing and electromechanical devices in vehicle 200 that are configured to cause a change in velocity and/or acceleration of vehicle 200. For example, processing unit 110 may execute instructions associated with velocity and acceleration module 406 to calculate a target speed for vehicle 200 based on data derived from execution of monocular image analysis module 402 and/or stereo image analysis module

404. Such data may include, for example, a target position, velocity, and/or acceleration, the position and/or speed of vehicle 200 relative to a nearby vehicle, pedestrian, or road object, position information for vehicle 200 relative to lane markings of the road, and the like. In addition, processing unit 110 may calculate a target speed for vehicle 200 based on sensory input (e.g., information from radar) and input from other systems of vehicle 200, such as throttling system 220, braking system 230, and/or steering system 240 of vehicle 200. Based on the calculated target speed, processing unit 110 may transmit electronic signals to throttling system 220, braking system 230, and/or steering system 240 of vehicle 200 to trigger a change in velocity and/or acceleration by, for example, physically depressing the brake or easing up off the accelerator of vehicle 200.

[0098] In one embodiment, navigational response module 408 may store software executable by processing unit 110 to determine a desired navigational response based on data derived from execution of monocular image analysis module 402 and/or stereo image analysis module 404. Such data may include position and speed information associated with nearby vehicles, pedestrians, and road objects, target position information for vehicle 200, and the like. Additionally, in some embodiments, the navigational response may be based (partially or fully) on map data, a predetermined position of vehicle 200, and/or a relative velocity or a relative acceleration between vehicle 200 and one or more objects detected from execution of monocular image analysis module 402 and/or stereo image analysis module 404. Navigational response module 408 may also determine a desired navigational response based on sensory input (e.g., information from radar) and inputs from other systems of vehicle 200, such as throttling system 220, braking system 230, and steering system 240 of vehicle 200. Based on the desired navigational response, processing unit 110 may transmit electronic signals to throttling system 220, braking system 230, and steering system 240 of vehicle 200 to trigger a desired navigational response by, for example, turning the steering wheel of vehicle 200 to achieve a rotation of a predetermined angle. In some embodiments, processing unit 110 may use the output of navigational response module 408 (e.g., the desired navigational response) as an input to execution of velocity and acceleration module 406 for calculating a change in speed of vehicle 200.

[0099] FIG. 5A is a flowchart showing an exemplary process 500A for causing one or more navigational responses based on monocular image analysis, consistent with disclosed embodiments. At step 510, processing unit 110 may receive a plurality of images via data interface 128 between processing unit 110 and image acquisition unit 120. For instance, a

camera included in image acquisition unit 120 (such as image capture device 122 having field of view 202) may capture a plurality of images of an area forward of vehicle 200 (or to the sides or rear of a vehicle, for example) and transmit them over a data connection (e.g., digital, wired, USB, wireless, Bluetooth, etc.) to processing unit 110. Processing unit 110 may execute monocular image analysis module 402 to analyze the plurality of images at step 520, as described in further detail in connection with FIGS. 5B-5D below. By performing the analysis, processing unit 110 may detect a set of features within the set of images, such as lane markings, vehicles, pedestrians, road signs, highway exit ramps, traffic lights, and the like.

[00100] Processing unit 110 may also execute monocular image analysis module 402 to detect various road hazards at step 520, such as, for example, parts of a truck tire, fallen road signs, loose cargo, small animals, and the like. Road hazards may vary in structure, shape, size, and color, which may make detection of such hazards more challenging. In some embodiments, processing unit 110 may execute monocular image analysis module 402 to perform multi-frame analysis on the plurality of images to detect road hazards. For example, processing unit 110 may estimate camera motion between consecutive image frames and calculate the disparities in pixels between the frames to construct a 3D-map of the road. Processing unit 110 may then use the 3D-map to detect the road surface, as well as hazards existing above the road surface.

[00101] At step 530, processing unit 110 may execute navigational response module 408 to cause one or more navigational responses in vehicle 200 based on the analysis performed at step 520 and the techniques as described above in connection with FIG. 4. Navigational responses may include, for example, a turn, a lane shift, a change in acceleration, and the like. In some embodiments, processing unit 110 may use data derived from execution of velocity and acceleration module 406 to cause the one or more navigational responses. Additionally, multiple navigational responses may occur simultaneously, in sequence, or any combination thereof. For instance, processing unit 110 may cause vehicle 200 to shift one lane over and then accelerate by, for example, sequentially transmitting control signals to steering system 240 and throttling system 220 of vehicle 200. Alternatively, processing unit 110 may cause vehicle 200 to brake while at the same time shifting lanes by, for example, simultaneously transmitting control signals to braking system 230 and steering system 240 of vehicle 200.

[00102] FIG. 5B is a flowchart showing an exemplary process 500B for detecting one or more vehicles and/or pedestrians in a set of images, consistent with disclosed embodiments. Processing unit 110 may execute monocular image analysis module 402 to implement process

500B. At step 540, processing unit 110 may determine a set of candidate objects representing possible vehicles and/or pedestrians. For example, processing unit 110 may scan one or more images, compare the images to one or more predetermined patterns, and identify within each image possible locations that may contain objects of interest (e.g., vehicles, pedestrians, or portions thereof). The predetermined patterns may be designed in such a way to achieve a high rate of "false hits" and a low rate of "misses." For example, processing unit 110 may use a low threshold of similarity to predetermined patterns for identifying candidate objects as possible vehicles or pedestrians. Doing so may allow processing unit 110 to reduce the probability of missing (e.g., not identifying) a candidate object representing a vehicle or pedestrian.

[00103] At step 542, processing unit 110 may filter the set of candidate objects to exclude certain candidates (e.g., irrelevant or less relevant objects) based on classification criteria. Such criteria may be derived from various properties associated with object types stored in a database (e.g., a database stored in memory 140). Properties may include object shape, dimensions, texture, position (e.g., relative to vehicle 200), and the like. Thus, processing unit 110 may use one or more sets of criteria to reject false candidates from the set of candidate objects.

[00104] At step 544, processing unit 110 may analyze multiple frames of images to determine whether objects in the set of candidate objects represent vehicles and/or pedestrians. For example, processing unit 110 may track a detected candidate object across consecutive frames and accumulate frame-by-frame data associated with the detected object (e.g., size, position relative to vehicle 200, etc.). Additionally, processing unit 110 may estimate parameters for the detected object and compare the object's frame-by-frame position data to a predicted position.

[00105] At step 546, processing unit 110 may construct a set of measurements for the detected objects. Such measurements may include, for example, position, velocity, and acceleration values (relative to vehicle 200) associated with the detected objects. In some embodiments, processing unit 110 may construct the measurements based on estimation techniques using a series of time-based observations such as Kalman filters or linear quadratic estimation (LQE), and/or based on available modeling data for different object types (e.g., cars, trucks, pedestrians, bicycles, road signs, etc.). The Kalman filters may be based on a measurement of an object's scale, where the scale measurement is proportional to a time to collision (e.g., the amount of time for vehicle 200 to reach the object). Thus, by performing steps 540-546, processing unit 110 may identify vehicles and pedestrians appearing within the set of

captured images and derive information (e.g., position, speed, size) associated with the vehicles and pedestrians. Based on the identification and the derived information, processing unit 110 may cause one or more navigational responses in vehicle 200, as described in connection with FIG. 5A, above.

[00106] At step 548, processing unit 110 may perform an optical flow analysis of one or more images to reduce the probabilities of detecting a "false hit" and missing a candidate object that represents a vehicle or pedestrian. The optical flow analysis may refer to, for example, analyzing motion patterns relative to vehicle 200 in the one or more images associated with other vehicles and pedestrians, and that are distinct from road surface motion. Processing unit 110 may calculate the motion of candidate objects by observing the different positions of the objects across multiple image frames, which are captured at different times. Processing unit 110 may use the position and time values as inputs into mathematical models for calculating the motion of the candidate objects. Thus, optical flow analysis may provide another method of detecting vehicles and pedestrians that are nearby vehicle 200. Processing unit 110 may perform optical flow analysis in combination with steps 540-546 to provide redundancy for detecting vehicles and pedestrians and increase the reliability of system 100.

[00107] FIG. 5C is a flowchart showing an exemplary process 500C for detecting road marks and/or lane geometry information in a set of images, consistent with disclosed embodiments. Processing unit 110 may execute monocular image analysis module 402 to implement process 500C. At step 550, processing unit 110 may detect a set of objects by scanning one or more images. To detect segments of lane markings, lane geometry information, and other pertinent road marks, processing unit 110 may filter the set of objects to exclude those determined to be irrelevant (e.g., minor potholes, small rocks, etc.). At step 552, processing unit 110 may group together the segments detected in step 550 belonging to the same road mark or lane mark. Based on the grouping, processing unit 110 may develop a model to represent the detected segments, such as a mathematical model.

[00108] At step 554, processing unit 110 may construct a set of measurements associated with the detected segments. In some embodiments, processing unit 110 may create a projection of the detected segments from the image plane onto the real-world plane. The projection may be characterized using a 3rd-degree polynomial having coefficients corresponding to physical properties such as the position, slope, curvature, and curvature derivative of the detected road. In generating the projection, processing unit 110 may take into account changes in the road surface, as well as pitch and roll rates associated with vehicle 200. In addition, processing unit

110 may model the road elevation by analyzing position and motion cues present on the road surface. Further, processing unit 110 may estimate the pitch and roll rates associated with vehicle 200 by tracking a set of feature points in the one or more images.

[00109] At step 556, processing unit 110 may perform multi-frame analysis by, for example, tracking the detected segments across consecutive image frames and accumulating frame-by-frame data associated with detected segments. As processing unit 110 performs multi-frame analysis, the set of measurements constructed at step 554 may become more reliable and associated with an increasingly higher confidence level. Thus, by performing steps 550-556, processing unit 110 may identify road marks appearing within the set of captured images and derive lane geometry information. Based on the identification and the derived information, processing unit 110 may cause one or more navigational responses in vehicle 200, as described in connection with FIG. 5A, above.

[00110] At step 558, processing unit 110 may consider additional sources of information to further develop a safety model for vehicle 200 in the context of its surroundings. Processing unit 110 may use the safety model to define a context in which system 100 may execute autonomous control of vehicle 200 in a safe manner. To develop the safety model, in some embodiments, processing unit 110 may consider the position and motion of other vehicles, the detected road edges and barriers, and/or general road shape descriptions extracted from map data (such as data from map database 160). By considering additional sources of information, processing unit 110 may provide redundancy for detecting road marks and lane geometry and increase the reliability of system 100.

[00111] FIG. 5D is a flowchart showing an exemplary process 500D for detecting traffic lights in a set of images, consistent with disclosed embodiments. Processing unit 110 may execute monocular image analysis module 402 to implement process 500D. At step 560, processing unit 110 may scan the set of images and identify objects appearing at locations in the images likely to contain traffic lights. For example, processing unit 110 may filter the identified objects to construct a set of candidate objects, excluding those objects unlikely to correspond to traffic lights. The filtering may be done based on various properties associated with traffic lights, such as shape, dimensions, texture, position (e.g., relative to vehicle 200), and the like. Such properties may be based on multiple examples of traffic lights and traffic control signals and stored in a database. In some embodiments, processing unit 110 may perform multi-frame analysis on the set of candidate objects reflecting possible traffic lights. For example, processing unit 110 may track the candidate objects across consecutive image frames, estimate

the real-world position of the candidate objects, and filter out those objects that are moving (which are unlikely to be traffic lights). In some embodiments, processing unit 110 may perform color analysis on the candidate objects and identify the relative position of the detected colors appearing inside possible traffic lights.

[00112] At step 562, processing unit 110 may analyze the geometry of a junction. The analysis may be based on any combination of: (i) the number of lanes detected on either side of vehicle 200, (ii) markings (such as arrow marks) detected on the road, and (iii) descriptions of the junction extracted from map data (such as data from map database 160). Processing unit 110 may conduct the analysis using information derived from execution of monocular analysis module 402. In addition, Processing unit 110 may determine a correspondence between the traffic lights detected at step 560 and the lanes appearing near vehicle 200.

[00113] As vehicle 200 approaches the junction, at step 564, processing unit 110 may update the confidence level associated with the analyzed junction geometry and the detected traffic lights. For instance, the number of traffic lights estimated to appear at the junction as compared with the number actually appearing at the junction may impact the confidence level. Thus, based on the confidence level, processing unit 110 may delegate control to the driver of vehicle 200 in order to improve safety conditions. By performing steps 560-564, processing unit 110 may identify traffic lights appearing within the set of captured images and analyze junction geometry information. Based on the identification and the analysis, processing unit 110 may cause one or more navigational responses in vehicle 200, as described in connection with FIG. 5A, above.

[00114] FIG. 5E is a flowchart showing an exemplary process 500E for causing one or more navigational responses in vehicle 200 based on a vehicle path, consistent with the disclosed embodiments. At step 570, processing unit 110 may construct an initial vehicle path associated with vehicle 200. The vehicle path may be represented using a set of points expressed in coordinates (x, z), and the distance d_i between two points in the set of points may fall in the range of 1 to 5 meters. In one embodiment, processing unit 110 may construct the initial vehicle path using two polynomials, such as left and right road polynomials. Processing unit 110 may calculate the geometric midpoint between the two polynomials and offset each point included in the resultant vehicle path by a predetermined offset (e.g., a smart lane offset), if any (an offset of zero may correspond to travel in the middle of a lane). The offset may be in a direction perpendicular to a segment between any two points in the vehicle path. In another embodiment, processing unit 110 may use one polynomial and an estimated lane width to offset each point of

the vehicle path by half the estimated lane width plus a predetermined offset (e.g., a smart lane offset).

[00115] At step 572, processing unit 110 may update the vehicle path constructed at step 570. Processing unit 110 may reconstruct the vehicle path constructed at step 570 using a higher resolution, such that the distance d_k between two points in the set of points representing the vehicle path is less than the distance d_l described above. For example, the distance d_k may fall in the range of 0.1 to 0.3 meters. Processing unit 110 may reconstruct the vehicle path using a parabolic spline algorithm, which may yield a cumulative distance vector S corresponding to the total length of the vehicle path (i.e., based on the set of points representing the vehicle path).

[00116] At step 574, processing unit 110 may determine a look-ahead point (expressed in coordinates as (x_1, z_1)) based on the updated vehicle path constructed at step 572. Processing unit 110 may extract the look-ahead point from the cumulative distance vector S, and the look-ahead point may be associated with a look-ahead distance and look-ahead time. The look-ahead distance, which may have a lower bound ranging from 10 to 20 meters, may be calculated as the product of the speed of vehicle 200 and the look-ahead time. For example, as the speed of vehicle 200 decreases, the look-ahead distance may also decrease (e.g., until it reaches the lower bound). The look-ahead time, which may range from 0.5 to 1.5 seconds, may be inversely proportional to the gain of one or more control loops associated with causing a navigational response in vehicle 200, such as the heading error tracking control loop. For example, the gain of the heading error tracking control loop may depend on the bandwidth of a yaw rate loop, a steering actuator loop, car lateral dynamics, and the like. Thus, the higher the gain of the heading error tracking control loop, the lower the look-ahead time.

[00117] At step 576, processing unit 110 may determine a heading error and yaw rate command based on the look-ahead point determined at step 574. Processing unit 110 may determine the heading error by calculating the arctangent of the look-ahead point, e.g., arctan (x_1/z_1). Processing unit 110 may determine the yaw rate command as the product of the heading error and a high-level control gain. The high-level control gain may be equal to: (2/look-ahead time), if the look-ahead distance is not at the lower bound. Otherwise, the high-level control gain may be equal to: (2*speed of vehicle 200/look-ahead distance).

[00118] FIG. 5F is a flowchart showing an exemplary process 500F for determining whether a leading vehicle is changing lanes, consistent with the disclosed embodiments. At step 580, processing unit 110 may determine navigation information associated with a leading vehicle

(e.g., a vehicle traveling ahead of vehicle 200). For example, processing unit 110 may determine the position, velocity (e.g., direction and speed), and/or acceleration of the leading vehicle, using the techniques described in connection with FIGS. 5A and 5B, above. Processing unit 110 may also determine one or more road polynomials, a look-ahead point (associated with vehicle 200), and/or a snail trail (e.g., a set of points describing a path taken by the leading vehicle), using the techniques described in connection with FIG. 5E, above.

[00119] At step 582, processing unit 110 may analyze the navigation information determined at step 580. In one embodiment, processing unit 110 may calculate the distance between a snail trail and a road polynomial (e.g., along the trail). If the variance of this distance along the trail exceeds a predetermined threshold (for example, 0.1 to 0.2 meters on a straight road, 0.3 to 0.4 meters on a moderately curvy road, and 0.5 to 0.6 meters on a road with sharp curves), processing unit 110 may determine that the leading vehicle is likely changing lanes. In the case where multiple vehicles are detected traveling ahead of vehicle 200, processing unit 110 may compare the snail trails associated with each vehicle. Based on the comparison, processing unit 110 may determine that a vehicle whose snail trail does not match with the snail trails of the other vehicles is likely changing lanes. Processing unit 110 may additionally compare the curvature of the snail trail (associated with the leading vehicle) with the expected curvature of the road segment in which the leading vehicle is traveling. The expected curvature may be extracted from map data (e.g., data from map database 160), from road polynomials, from other vehicles' snail trails, from prior knowledge about the road, and the like. If the difference in curvature of the snail trail and the expected curvature of the road segment exceeds a predetermined threshold, processing unit 110 may determine that the leading vehicle is likely changing lanes.

[00120] In another embodiment, processing unit 110 may compare the leading vehicle's instantaneous position with the look-ahead point (associated with vehicle 200) over a specific period of time (e.g., 0.5 to 1.5 seconds). If the distance between the leading vehicle's instantaneous position and the look-ahead point varies during the specific period of time, and the cumulative sum of variation exceeds a predetermined threshold (for example, 0.3 to 0.4 meters on a straight road, 0.7 to 0.8 meters on a moderately curvy road, and 1.3 to 1.7 meters on a road with sharp curves), processing unit 110 may determine that the leading vehicle is likely changing lanes. In another embodiment, processing unit 110 may analyze the geometry of the snail trail by comparing the lateral distance traveled along the trail with the expected curvature of the snail trail. The expected radius of curvature may be determined according to

the calculation: $(\delta_z^2+\delta_x^2)/2/(\delta_x)$, where δ_x represents the lateral distance traveled and δ_z represents the longitudinal distance traveled. If the difference between the lateral distance traveled and the expected curvature exceeds a predetermined threshold (e.g., 500 to 700 meters), processing unit 110 may determine that the leading vehicle is likely changing lanes. In another embodiment, processing unit 110 may analyze the position of the leading vehicle. If the position of the leading vehicle obscures a road polynomial (e.g., the leading vehicle is overlaid on top of the road polynomial), then processing unit 110 may determine that the leading vehicle is likely changing lanes. In the case where the position of the leading vehicle is such that, another vehicle is detected ahead of the leading vehicle and the snail trails of the two vehicles are not parallel, processing unit 110 may determine that the (closer) leading vehicle is likely changing lanes.

[00121] At step 584, processing unit 110 may determine whether or not leading vehicle 200 is changing lanes based on the analysis performed at step 582. For example, processing unit 110 may make the determination based on a weighted average of the individual analyses performed at step 582. Under such a scheme, for example, a decision by processing unit 110 that the leading vehicle is likely changing lanes based on a particular type of analysis may be assigned a value of "1" (and "0" to represent a determination that the leading vehicle is not likely changing lanes). Different analyses performed at step 582 may be assigned different weights, and the disclosed embodiments are not limited to any particular combination of analyses and weights.

[00122] FIG. 6 is a flowchart showing an exemplary process 600 for causing one or more navigational responses based on stereo image analysis, consistent with disclosed embodiments. At step 610, processing unit 110 may receive a first and second plurality of images via data interface 128. For example, cameras included in image acquisition unit 120 (such as image capture devices 122 and 124 having fields of view 202 and 204) may capture a first and second plurality of images of an area forward of vehicle 200 and transmit them over a digital connection (e.g., USB, wireless, Bluetooth, etc.) to processing unit 110. In some embodiments, processing unit 110 may receive the first and second plurality of images via two or more data interfaces. The disclosed embodiments are not limited to any particular data interface configurations or protocols.

[00123] At step 620, processing unit 110 may execute stereo image analysis module 404 to perform stereo image analysis of the first and second plurality of images to create a 3D map of the road in front of the vehicle and detect features within the images, such as lane markings,

vehicles, pedestrians, road signs, highway exit ramps, traffic lights, road hazards, and the like. Stereo image analysis may be performed in a manner similar to the steps described in connection with FIGS. 5A-5D, above. For example, processing unit 110 may execute stereo image analysis module 404 to detect candidate objects (e.g., vehicles, pedestrians, road marks, traffic lights, road hazards, etc.) within the first and second plurality of images, filter out a subset of the candidate objects based on various criteria, and perform multi-frame analysis, construct measurements, and determine a confidence level for the remaining candidate objects. In performing the steps above, processing unit 110 may consider information from both the first and second plurality of images, rather than information from one set of images alone. For example, processing unit 110 may analyze the differences in pixel-level data (or other data subsets from among the two streams of captured images) for a candidate object appearing in both the first and second plurality of images. As another example, processing unit 110 may estimate a position and/or velocity of a candidate object (e.g., relative to vehicle 200) by observing that the object appears in one of the plurality of images but not the other or relative to other differences that may exist relative to objects appearing if the two image streams. For example, position, velocity, and/or acceleration relative to vehicle 200 may be determined based on trajectories, positions, movement characteristics, etc. of features associated with an object appearing in one or both of the image streams.

[00124] At step 630, processing unit 110 may execute navigational response module 408 to cause one or more navigational responses in vehicle 200 based on the analysis performed at step 620 and the techniques as described above in connection with FIG. 4. Navigational responses may include, for example, a turn, a lane shift, a change in acceleration, a change in velocity, braking, and the like. In some embodiments, processing unit 110 may use data derived from execution of velocity and acceleration module 406 to cause the one or more navigational responses. Additionally, multiple navigational responses may occur simultaneously, in sequence, or any combination thereof.

[00125] FIG. 7 is a flowchart showing an exemplary process 700 for causing one or more navigational responses based on an analysis of three sets of images, consistent with disclosed embodiments. At step 710, processing unit 110 may receive a first, second, and third plurality of images via data interface 128. For instance, cameras included in image acquisition unit 120 (such as image capture devices 122, 124, and 126 having fields of view 202, 204, and 206) may capture a first, second, and third plurality of images of an area forward and/or to the side of vehicle 200 and transmit them over a digital connection (e.g., USB, wireless, Bluetooth, etc.) to

processing unit 110. In some embodiments, processing unit 110 may receive the first, second, and third plurality of images via three or more data interfaces. For example, each of image capture devices 122, 124, 126 may have an associated data interface for communicating data to processing unit 110. The disclosed embodiments are not limited to any particular data interface configurations or protocols.

[00126] At step 720, processing unit 110 may analyze the first, second, and third plurality of images to detect features within the images, such as lane markings, vehicles, pedestrians, road signs, highway exit ramps, traffic lights, road hazards, and the like. The analysis may be performed in a manner similar to the steps described in connection with FIGS. 5A-5D and 6, above. For instance, processing unit 110 may perform monocular image analysis (e.g., via execution of monocular image analysis module 402 and based on the steps described in connection with FIGS. 5A-5D, above) on each of the first, second, and third plurality of images. Alternatively, processing unit 110 may perform stereo image analysis (e.g., via execution of stereo image analysis module 404 and based on the steps described in connection with FIG. 6, above) on the first and second plurality of images, the second and third plurality of images, and/or the first and third plurality of images. The processed information corresponding to the analysis of the first, second, and/or third plurality of images may be combined. In some embodiments, processing unit 110 may perform a combination of monocular and stereo image analyses. For example, processing unit 110 may perform monocular image analysis (e.g., via execution of monocular image analysis module 402) on the first plurality of images and stereo image analysis (e.g., via execution of stereo image analysis module 404) on the second and third plurality of images. The configuration of image capture devices 122, 124, and 126 – including their respective locations and fields of view 202, 204, and 206 – may influence the types of analyses conducted on the first, second, and third plurality of images. The disclosed embodiments are not limited to a particular configuration of image capture devices 122, 124, and 126, or the types of analyses conducted on the first, second, and third plurality of images.

[00127] In some embodiments, processing unit 110 may perform testing on system 100 based on the images acquired and analyzed at steps 710 and 720. Such testing may provide an indicator of the overall performance of system 100 for certain configurations of image capture devices 122, 124, and 126. For example, processing unit 110 may determine the proportion of "false hits" (e.g., cases where system 100 incorrectly determined the presence of a vehicle or pedestrian) and "misses."

[00128] At step 730, processing unit 110 may cause one or more navigational responses in vehicle 200 based on information derived from two of the first, second, and third plurality of images. Selection of two of the first, second, and third plurality of images may depend on various factors, such as, for example, the number, types, and sizes of objects detected in each of the plurality of images. Processing unit 110 may also make the selection based on image quality and resolution, the effective field of view reflected in the images, the number of captured frames, the extent to which one or more objects of interest actually appear in the frames (e.g., the percentage of frames in which an object appears, the proportion of the object that appears in each such frame, etc.), and the like.

[00129] In some embodiments, processing unit 110 may select information derived from two of the first, second, and third plurality of images by determining the extent to which information derived from one image source is consistent with information derived from other image sources. For example, processing unit 110 may combine the processed information derived from each of image capture devices 122, 124, and 126 (whether by monocular analysis, stereo analysis, or any combination of the two) and determine visual indicators (e.g., lane markings, a detected vehicle and its location and/or path, a detected traffic light, etc.) that are consistent across the images captured from each of image capture devices 122, 124, and 126. Processing unit 110 may also exclude information that is inconsistent across the captured images (e.g., a vehicle changing lanes, a lane model indicating a vehicle that is too close to vehicle 200, etc.). Thus, processing unit 110 may select information derived from two of the first, second, and third plurality of images based on the determinations of consistent and inconsistent information.

[00130] Navigational responses may include, for example, a turn, a lane shift, a change in acceleration, and the like. Processing unit 110 may cause the one or more navigational responses based on the analysis performed at step 720 and the techniques as described above in connection with FIG. 4. Processing unit 110 may also use data derived from execution of velocity and acceleration module 406 to cause the one or more navigational responses. In some embodiments, processing unit 110 may cause the one or more navigational responses based on a relative position, relative velocity, and/or relative acceleration between vehicle 200 and an object detected within any of the first, second, and third plurality of images. Multiple navigational responses may occur simultaneously, in sequence, or any combination thereof.

[00131] Top-Down Refinement

[00132] System 100 may provide vehicle 200 with top-down refinement of a lane marking model to improve lane marking detection. Top-down refinement of an updated model, before it

is matched with bottom-up detection, can lead to more accurate results than matching an updated model, without top-down refinement, with bottom-up detection.

[00133] In road processing an updated multi-frame analysis may be combined with bottom-up detection to build a model (e.g., parametric) of lane markings. The multi-frame analysis may update itself by relying on camera odometry to estimate, based on the model data, a predicted position of the lane markings at a subsequent time. The camera odometry, such as ego-motion or sensor data such as speed and yaw rate, may indicate how far the camera has moved relative to the roadway since a prior frame. The model of lane markings may comprise mathematical constructs, such as polynomials, to represent the lane markings on a roadway. Multi-frame analysis can be viewed as a model layer analysis that need not process raw image data (e.g., pixels), but rather prior model information. The multi-frame analysis may additionally or alternatively utilize any suitable

[00134] A bottom-up detection system may comprise a single frame analysis that generates a model of lane markings based on image data. The model generated from the single frame analysis can then be matched to the lane marking model to redetect, eliminate of make new lane markings in the lane marking model. Single frame analysis can be viewed as an image layer analysis that processes raw image data. For example, it may include identifying edgelets (e.g., using the Sobel method and non-maximal suppression), creating segments (e.g., using local Hough-peaks and iteratively reweighted least squares method), growing a graph (e.g., using a statistically tuned semi-greedy scan line algorithm - approximating best subset choosing).

[00135] It should be understood that for the purposes of the present disclosure each frame analyzed in either the multi-frame or single frame analysis need not be limited to image data from only one camera at a particular time but can also comprise image data derived from multiple cameras at a particular time.

[00136] FIGS. 8A–8D are diagrammatic representations of exemplary lane detection analyses without top-down refinement, such as those that may be implemented by a bottom-up detection system. FIGS. 8A and 8B illustrates how well lane markings can be detected by a bottom-up detection system when an image of a roadway in a vicinity of a vehicle is in good condition (e.g., clear weather conditions, clear windshield in front of camera(s), new road with no tar marks / seams, bright and clear lane markings). FIG. 8A illustrates an image of a roadway in good condition, with lane markings comprising solid lines 802, 804 and 806 and dashed line 800. FIG. 8B shows sections 812, 814 and 816 as identified by the bottom-up

detection system, accurately representing solid line 802, 804 and 806, and section 810 as identified by the system, accurately representing dashed line 800. The accurate identification of sections 810, 812, 814 and 816 result in solid lines 802, 804 and 806 and dashed line 800 being correctly detected by the system.

[00137] However, lane detection can become more difficult when an image of a roadway in a vicinity of a vehicle comprises a tough scene, such as those having low SNR (signal to noise ration), low sun, shadows, washed-out markings, curves - especially with dashed lines, and only a single or partial dash of a dashed line in view. FIG. 8C illustrates an image of a roadway in a tough scene, with lane markings comprising curved dashed lines 820 and 822, light pole shadows 826 and 828, and sun glare region 824 on the vehicle windshield in front of the camera(s). FIG. 8D shows sections 830 and 832 as identified by the bottom-up detection system, accurately representing dashed lines 820 and 822, but sections 834, 836 and 838 are also identified by the system, which represent sun glare region 824 and light pole shadows 826 and 828. The accurate identification of sections 830 and 832, but the inaccurate identification of sections 834, 836 and 838, result in dashed lines 820 and 822 being only partially correctly detected by the system. For example, the system may inaccurately detect dashed lines 820 and 822 as being longer than they actually are.

[00138] This example can reflect problems with bottom-up detection, such as solving a big combinatorial search, needing to be cheap and greedy (e.g., by setting limits on edgelets, segments, and graph growing), causing missing and unclean paths, making it difficult to classify objects (especially dashes), and sometimes costing too much. Bottom-up detection is designed to do bottom up processing that assumes very little about the scene (e.g., mostly just calibration and horizon), and tries to build a graph of paths representing the road structures for each frame (e.g., painted lanes, road edge, barriers) independently. These structures are then linked up (e.g., using a more constrained 3rd degree polynomial model) over time to form the multi-frame candidates which may then be approved and become part of the lane marking model.

[00139] This type of bottom-up detection system does a lot of work (since it assumes very little) and has to take shortcuts, mostly in the form of making early greedy decisions. However, once the system has a set of good candidates (from the previous frame, for example), the system can do better by going back into the image and verifying, extending, and refining those candidates. This is a goal of refinement.

[00140] FIG. 9 is a diagrammatic representation of an exemplary top-down refinement architecture consistent with the disclosed embodiments. As shown in FIG. 9, multi-frame

modeling 900 may undergo a top-down refinement (902) of its update of the lane marking model in the image layer, prior to matching (906) in the model layer against the single frame modeling generated from bottom-up detection (904). By introducing refinement to the updated lane marking model, system 100 can search the image at a location that the multi-frame analysis expects lane marks to be, and it can search the image for a lane mark appearance known by system 100. The appearance model can comprise any suitable feature or combination of features, such as dimensions (e.g., width, cross-section, distance along its length, profile, shape), texture, sharpness of edges, brightness, etc. In other words, top-down refinement allows system 100 to use the history of what a lane marking looked like in the past in order to help identify the candidate lane marks in the current image. In the context of dashed lines, system 100 may use an appearance model in combination any other suitable feature, such as one or more of a spacing between the dashes, a lateral position of the dashes relative to the roadway, and the existence of a parallel lane mark on one side of a dash, which together forms a double lane mark (e.g., like a double yellow line in the U.S.). Top-down refinement can provide robustness by being semi-independent and provide cleaner detections, extended view range, more accurate and richer modeling and load balancing.

[00141] Based on the top-down refinement of the lane marking model, system 100 may determine whether or not vehicle 200 should take a certain action, and then automatically take the determined action without human intervention. For example, when vehicle 200 navigates without human intervention, system 100 may automatically control the braking, acceleration, and/or steering of vehicle 200 (e.g., by sending control signals to one or more of throttling system 220, braking system 230, and steering system 240). Further, system 100 may analyze collected data based on the top-down refinement of the lane marking model and issue warnings and/or alerts to vehicle occupants based on the analysis of the collected data.

[00142] Any lane mark candidate proposal system which specifies an approximate position (either parametrically or non-parametrically) for a given frame may constitute the input hypothesis that is being refined. Such a proposal may comprise additional information besides the approximate position of the lane mark that can then be used by the refinement algorithm (such as width, brightness, dash mark spacing, edge sharpness, etc.) but these are not necessary to run the refinement algorithm. Thus, such hypotheses can come from:

[00143] - if no lane marks were found, then assumed lane mark location and orientation relative to vehicle 200 (e.g., parallel to the vehicle on either side)

[00144] - if a lane mark was detected by some method somewhere in the image, the location of other lane marks that are parallel and are at some lane-width distance away can be hypothesized

[00145] - any other suitable lane detection systems, and/or

[00146] - any such algorithms (including refinement) that found lane marks on the previous frame and, using ego-motion, estimated their position on the current frame.

[00147] FIG. 10A is an exemplary block diagram of memory 140 or 150, which may store instructions for performing one or more operations consistent with disclosed embodiments. As illustrated in FIG. 10A, memory 140 or 150 may store one or more modules for performing the top-down refinement of a lane marking model described herein. For example, memory 140 or 150 may store a lane detection module 1000 and an action module 1002.

[00148] Lane detection module 1000 may store instructions which, when executed by processing unit 110, may perform top-down refinement of a lane marking model. For example, processing unit 110 may receive from one or more cameras 122, 124 and 126 one or more images of a roadway in a vicinity of a vehicle. The roadway may comprise a lane marking comprising a dashed line. Processing unit 110 may update a model of the lane marking based on odometry of the one or more cameras relative to the roadway, and refine the updated model of the lane marking based on an appearance of dashes derived from the received one or more images and a spacing between dashes derived from the received one or more images.

[00149] The camera odometry may comprise any suitable mechanism to determine the distance traveled by the camera relative to the roadway, such as ego-motion, sensor data such as speed and yaw rate, and/or visual analysis of multiple successive image frames.

[00150] The refinement of the updated model may be further based on a lateral position, relative to the roadway, of dashes derived from the received one or more images. The refinement of the updated model may be further based on existence of a parallel lane marking on one side of dashes derived from the received one or more images. The appearance of the dashes can comprise any suitable identifying feature, such as one or more of a width of the dashes, a brightness of the dashes and an edge sharpness of the dashes. The refinement of the updated model may comprise a dynamic programming technique.

[00151] Processing unit 110 may also generate a model of the lane marking based on the received one or more images, and match the generated model to the refined model to approve the lane marking.

[00152] Action module 1002 may store instructions which, when executed by processing unit 110, may cause one or more navigational responses in the vehicle based on the refinement of the updated model. The one or more one navigational responses may comprise a steering of the vehicle and/or an audible alert.

[00153] FIG. 10B illustrates a process 1050 for performing the top-down refinement of a lane marking model consistent with disclosed embodiments. According to some embodiments, process 1050 may be implemented by one or more components of navigation system 100, such as at least one processing unit 110. At step 1052, process 1050 may receive, by one or more processors, from one or more cameras one or more images of a roadway in a vicinity of a vehicle. The roadway may comprise a lane marking comprising a dashed line. At step 1054, process 1050 may update, by one or more processors, a model of the lane marking based on odometry of the one or more cameras relative to the roadway. At step 1056, process 1050 may refine, by one or more processors, the updated model of the lane marking based on an appearance of dashes derived from the received one or more images and a spacing between dashes derived from the received one or more images. At step 1058, process 1050 may cause, by one or more processors, one or more navigational responses in the vehicle based on the refinement of the updated model.

[00154] In process 1050 the camera odometry may comprise any suitable mechanism to determine the distance traveled by the camera relative to the roadway, such as ego-motion, sensor data such as speed and yaw rate, and/or visual analysis of multiple successive image frames. The refinement of the updated model may be further based on a lateral position, relative to the roadway, of dashes derived from the received one or more images. The refinement of the updated model may be further based on existence of a parallel lane marking on one side of dashes derived from the received one or more images. The appearance of the dashes can comprise any suitable identifying feature, such as one or more of a width of the dashes, a brightness of the dashes and an edge sharpness of the dashes. The refinement of the updated model may comprise a dynamic programming technique. A model of the lane marking may also be generated based on the received one or more images, and the generated model may be matched to the refined model to approve the lane marking.

[00155] FIG. 11A illustrates a process 1100 for implementing top-down refinement consistent with the disclosed embodiments. FIGS. 11B-11N are diagrammatic representations of the top-down refinement implementation consistent with the disclosed embodiments.

[00156] According to some embodiments, process 1100 may be implemented by one or more components of navigation system 100, such as at least one processing unit 110. At step 1102, process 1100 may find refined pair points (RPPs). For example, system 100 may analyze received image data as shown in FIG. 11B and identify RPPs along the edges of the left and right lane markings, such as RPPs 1122, as shown in FIG. 11C. The vertical dots, such as boundary 1120, mark the search area around the predicted position of the lane marking where system 100 looks for RPPs based on the multi-frame analysis. The roadway in the image data may be straightened to provide a bird's eye view that does not converge at the horizon.

[00157] At step 1104, the detected RPPs may subsequently be clustered into sections, one of which is section 1130, as shown in FIG. 11D, and as indicated by the curly braces in FIG. 11E. The idea to use sections as an intermediate granularity object between local edge detections (e.g., edgelets) and the full lane mark "path" that is made up of a collection of segments. A key point is that the sections are locally linear one-sided objects, that can be made by clustering local edge detections and can be described compactly using a position and orientation (together with optional appearance attributes such as edge strength). This choice may make both forming the sections from local evidence possible and may allow the growing algorithm that connects the patch sections (described below) to treat them as atomic units with a simple parametric representation.

[00158] At step 1106, process 1100 may match the created sections to previous frame sections. As shown in FIG. 11F, the arrows indicate that a newly created section (on the right side of the image) matches to a previously modeled frame section (on the left side of the image). The circled section on the right side of the image indicates a section that was not matched to a previously modeled frame section.

[00159] At step 1108, process 1100 may select the path sections to be connected into the best path for the lane markings. The image data in FIG. 11G is provided to illustrate how system 100 can start from the left image which comprises 7 candidate path sections (ordered from 1 to 7 from the bottom up) and end by selecting the best path (e.g., a combination of sections or candidate lane markings) as shown by the 3 section dashed line path in the right image.

[00160] To generalize the problem, the input comprises n sections (and a set of features on them) and the output comprises a path comprising a subset of k sections that best describe the lane marking. The optimal solution is too expensive because there are 2^n possible solutions. A few features may be used to make it run fast and yet allow paths that can split and merge. For

example, the algorithm may run from bottom to top of image. Each current path end may try to find the next best section that continues it. If a section looks like a very good connection, it makes a greedy decision to connect, otherwise it continues to look for the best one. Additionally, a reverse process may find segments that were not chosen by paths from below and try to connect backwards to a good path that they connect well to, but happened not have been the best connection for that path when growing forward. This may allow for the finding of lane marking that split (e.g., around a traffic island).

[00161] Thus, the problem of the high cost of the optimal solution can be solved by defining a simpler problem and solving it by dynamic programming, which has n^2 in the worst case). An example dynamic programming algorithm follows:

[00162] Define the connection ends at section #1. (0->1)

[00163] For each section i (=2:n),

[00164] Go over j (=0:i-1) previous sections,

[00165] Define the path-section connection ends at j->i

[00166] Find the best connection ends at section i.

[00167] In other words, find the best path that ends at section k given the best paths that end at sections (1,...,k-1). The best path is then chosen by choosing the end section.

[00168] FIGS. 11H, 11I and 11J each show the same seven path sections that reflect the path section candidates for the dashed line of the roadway shown in the image of FIG. 11F. FIG. 11H shows the best paths (determined from the running of the dynamic programming algorithm) at each section, whereas FIG. 11I shows the best path for section 7 only. FIG. 11J shows part of the process of the algorithm when selecting section 6. This example shows connections being attempted between path section 6 and path sections 5, 4 and 3, respectively.

[00169] These tests may utilize any suitable number of classifiers, such as a step classifier, first classifier, terminal classifier, optimal classifier and path classifier. Features of the step classifier may include sec, sec-sec, and sec-paty, appearance features (e.g., brightness, width, edge sharpness, etc.), lateral-geometry (orientation, position, etc.) and longitudinal model (dash/solid – painted/gap lengths. The tests may also take into account one or more of appearance, spacing between sections and lateral position (spline). FIG. 11K shows an

example where the attempted connecting of sections 19 and 20 fail because the lateral position test veers the path sharply to the left, whereas FIG. 11L shows the attempted connecting of sections 19 and 21 which passes, since it provides a better fit with the sections below it.

[00170] At step 1110, process 1100 may estimate line intensity model of the connected path sections. System 100 can sample several scan lines along the path, estimate the cross section model parameters from each sample, and average the results to get a single model per path.

[00171] FIG. 11M shows the results of lane detection of the image data of FIG. 8C using a bottom-up detection system without top-down refinement. FIG. 11N shows the results of lane detection of the image data of FIG. 8C using system 100 with top-down refinement. As shown in FIG. 11M, the bottom-up detection system misses far dash marks such as dash 1142 and falsely detects glare on the windshield as lane mark 1140. However, FIG. 11N shows that with refinement these problems are resolved due to the use of the cross section model which matches the far dash marks and doesn't match the glare.

[00172] The foregoing description has been presented for purposes of illustration. It is not exhaustive and is not limited to the precise forms or embodiments disclosed. Modifications and adaptations will be apparent to those skilled in the art from consideration of the specification and practice of the disclosed embodiments. Additionally, although aspects of the disclosed embodiments are described as being stored in memory, one skilled in the art will appreciate that these aspects can also be stored on other types of computer readable media, such as secondary storage devices, for example, hard disks or CD ROM, or other forms of RAM or ROM, USB media, DVD, Blu-ray, or other optical drive media.

[00173] Computer programs based on the written description and disclosed methods are within the skill of an experienced developer. The various programs or program modules can be created using any of the techniques known to one skilled in the art or can be designed in connection with existing software. For example, program sections or program modules can be designed in or by means of .Net Framework, .Net Compact Framework (and related languages, such as Visual Basic, C, etc.), Java, C++, Objective-C, HTML, HTML/AJAX combinations, XML, or HTML with included Java applets. Further, it is to be understood that the functionality of the program modules described herein is not limited to the particular type of program module named herein, but rather can be programmed in any suitable manner across among one or more modules or other software constructs.

[00174] Moreover, while illustrative embodiments have been described herein, the scope of any and all embodiments having equivalent elements, modifications, omissions, combinations (e.g., of aspects across various embodiments), adaptations and/or alterations as would be appreciated by those skilled in the art based on the present disclosure. The limitations in the claims are to be interpreted broadly based on the language employed in the claims and not limited to examples described in the present specification or during the prosecution of the application. The examples are to be construed as non-exclusive. Furthermore, the steps of the disclosed methods may be modified in any manner, including by reordering steps and/or inserting or deleting steps. It is intended, therefore, that the specification and examples be considered as illustrative only, with a true scope and spirit being indicated by the following claims and their full scope of equivalents.

What Is Claimed Is:

1. A computer system comprising:
one or more memories storing instructions, and
one or more processors configured to execute the instructions to cause the system to:
receive from one or more cameras one or more images of a roadway in a vicinity of a vehicle, the roadway comprising a lane marking comprising a dashed line,
update a model of the lane marking based on odometry of the one or more cameras relative to the roadway,
refine the updated model of the lane marking based on an appearance of dashes derived from the received one or more images and a spacing between dashes derived from the received one or more images, and
cause one or more navigational responses in the vehicle based on the refinement of the updated model.

2. The computer system of claim 1, wherein the refinement of the updated model is further based on a lateral position, relative to the roadway, of dashes derived from the received one or more images.

3. The computer system of claim 1, wherein the refinement of the updated model is further based on existence of a parallel lane marking on one side of dashes derived from the received one or more images.

4. The computer system of claim 1, wherein the appearance of the dashes comprises a width of the dashes.

5. The computer system of claim 1, wherein the appearance of the dashes comprises a brightness of the dashes.

6. The computer system of claim 1, wherein the appearance of the dashes comprises an edge sharpness of the dashes.

7. The computer system of claim 1, wherein the refinement of the updated model comprises a dynamic programming technique.

8. The computer system of claim 1, wherein the one or more processors are configured to execute the instructions to cause the system to:

generate a model of the lane marking based on the received one or more images, and

match the generated model to the refined model to approve the lane marking.

9. The computer system of claim 1, wherein the one or more one navigational responses comprises a steering of the vehicle.

10. The computer system of claim 1, wherein the one or more one navigational responses comprises an audible alert.

11. A vehicle, comprising:

a body,

one or more cameras configured to acquire one or more images of a roadway in a vicinity of a vehicle, the roadway comprising a lane marking comprising a dashed line,

one or more memories storing instructions, and

one or more processors configured to execute the instructions to cause the vehicle to:

receive from one or more cameras the one or more acquired images of the roadway,

update a model of the lane marking based on odometry of the one or more cameras relative to the roadway,

refine the updated model of the lane marking based on an appearance of dashes derived from the received one or more images and a spacing between dashes derived from the received one or more images, and

cause one or more navigational responses in the vehicle based on the refinement of the updated model.

12. The vehicle of claim 11, wherein the refinement of the updated model is further based on a lateral position, relative to the roadway, of dashes derived from the received one or more images.

13. The vehicle of claim 11, wherein the refinement of the updated model is further based on existence of a parallel lane marking on one side of dashes derived from the received one or more images.

14. The vehicle of claim 11, wherein the appearance of the dashes comprises a width of the dashes.

15. The vehicle of claim 11, wherein the appearance of the dashes comprises a brightness of the dashes.

16. The vehicle of claim 11, wherein the appearance of the dashes comprises an edge sharpness of the dashes.

17. The vehicle of claim 11, wherein the refinement of the updated model comprises a dynamic programming technique.

18. The vehicle of claim 11, wherein the one or more processors are configured to execute the instructions to cause the vehicle to:

generate a model of the lane marking based on the received one or more images, and

match the generated model to the refined model to approve the lane marking.

19. The vehicle of claim 11, wherein the one or more one navigational responses comprises a steering of the vehicle.

20. The vehicle of claim 11, wherein the one or more one navigational responses comprises an audible alert.

21. A method comprising:

receiving, by one or more processors, from one or more cameras one or more images of a roadway in a vicinity of a vehicle, the roadway comprising a lane marking comprising a dashed line,

updating, by one or more processors, a model of the lane marking based on odometry of the one or more cameras relative to the roadway,

refining, by one or more processors, the updated model of the lane marking based on an appearance of dashes derived from the received one or more images and a spacing between dashes derived from the received one or more images, and

causing, by one or more processors, one or more navigational responses in the vehicle based on the refinement of the updated model.

22. The method of claim 21, wherein the refinement of the updated model is further based on a lateral position, relative to the roadway, of dashes derived from the received one or more images.

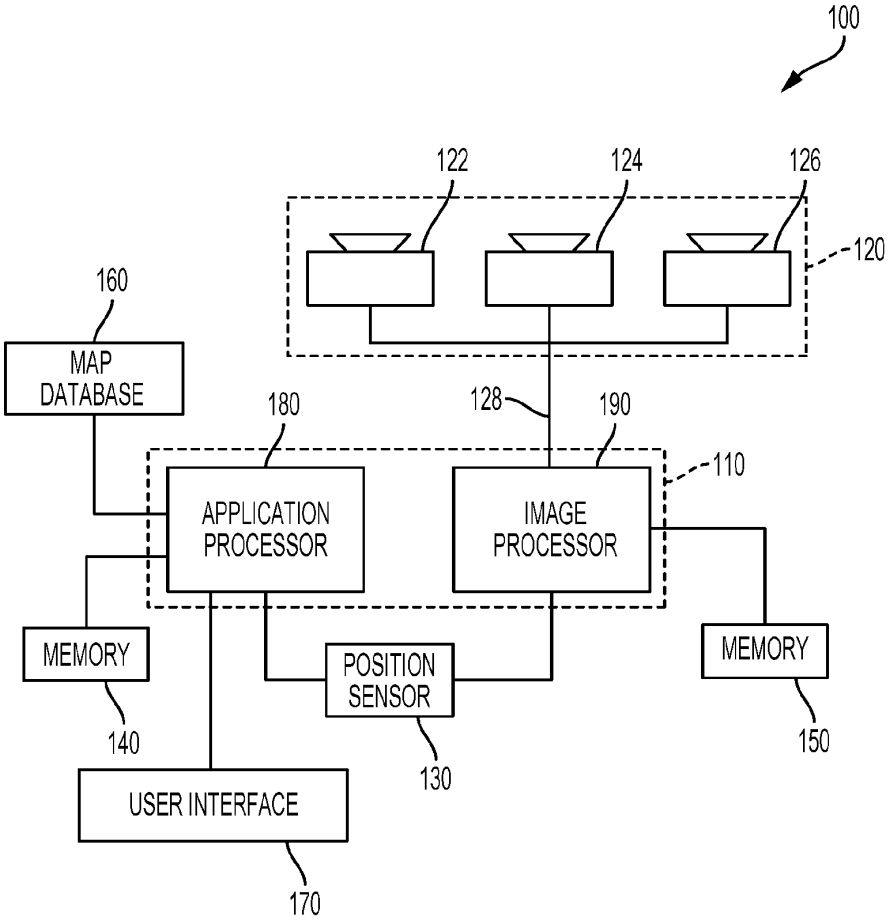
100
122
124
126
120
160
MAP DATABASE
180
128
190
110
APPLICATION PROCESSOR
IMAGE PROCESSOR
MEMORY
POSITION SENSOR
MEMORY
140
130
150
USER INTERFACE
170

FIG. 1

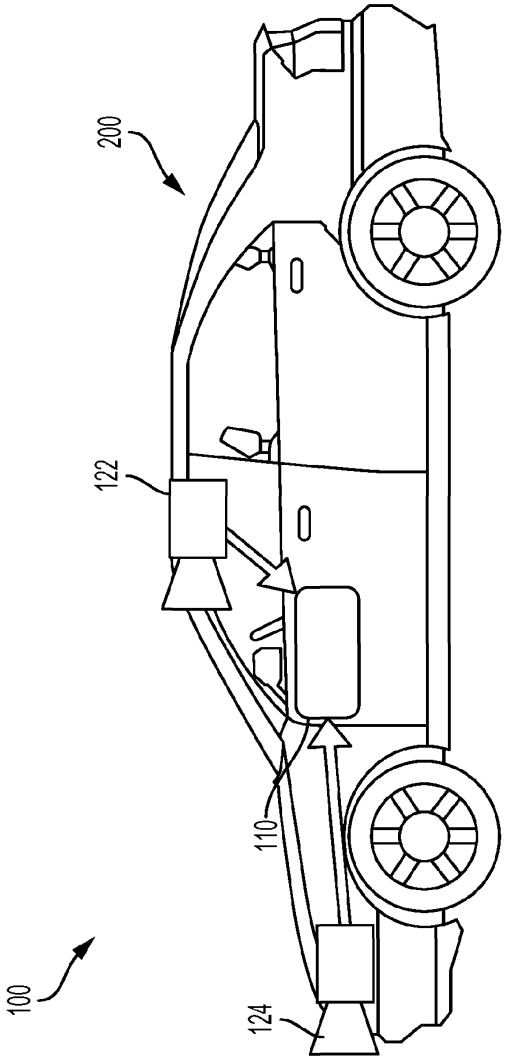

FIG. 2A

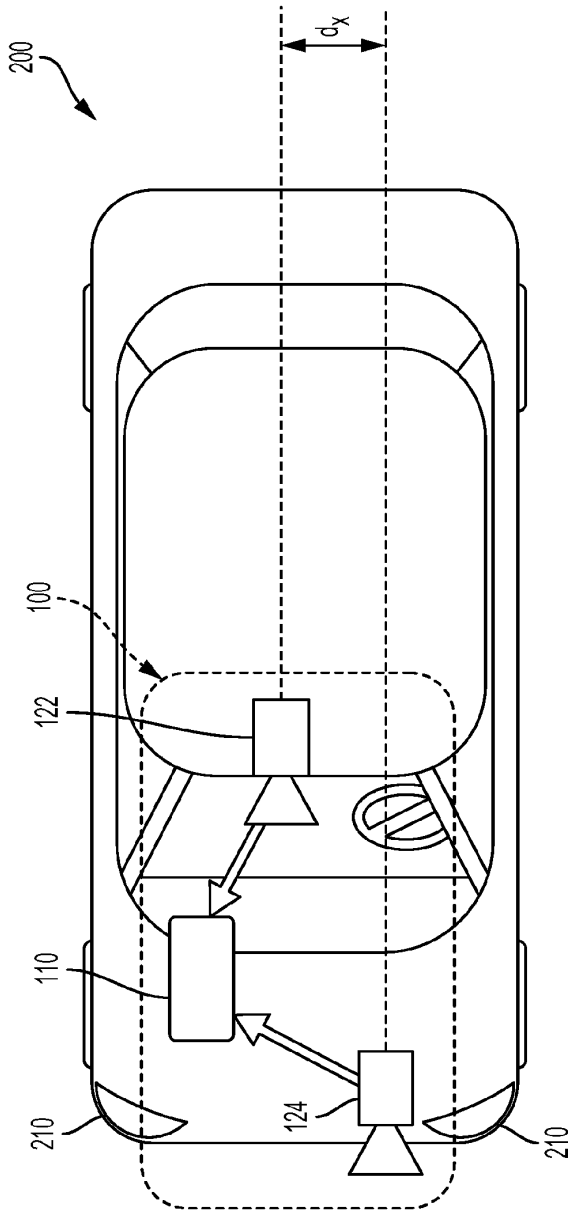

FIG. 2B

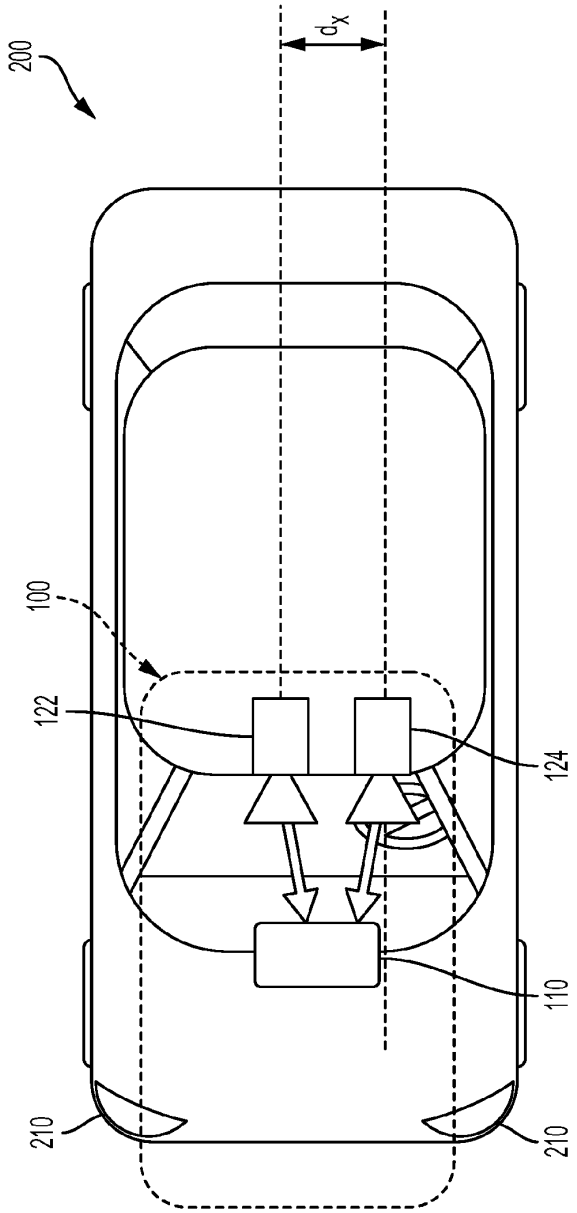

FIG. 2C

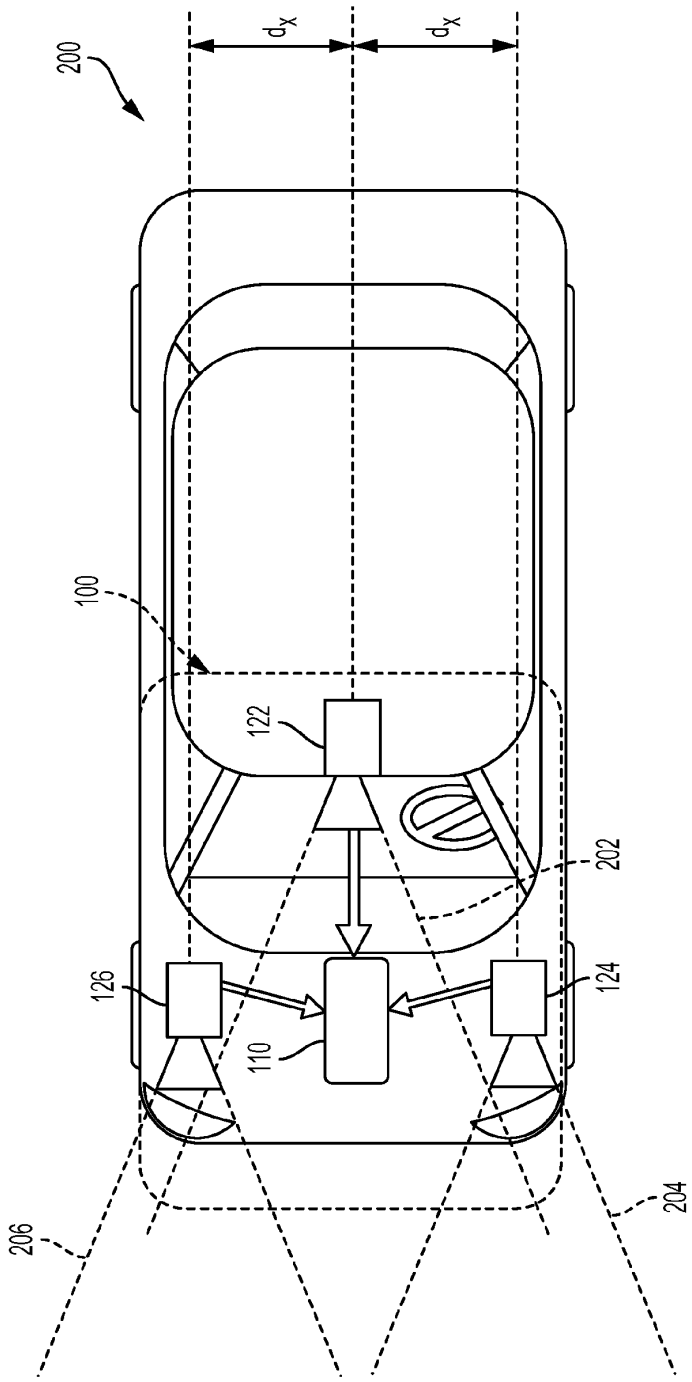

FIG. 2D

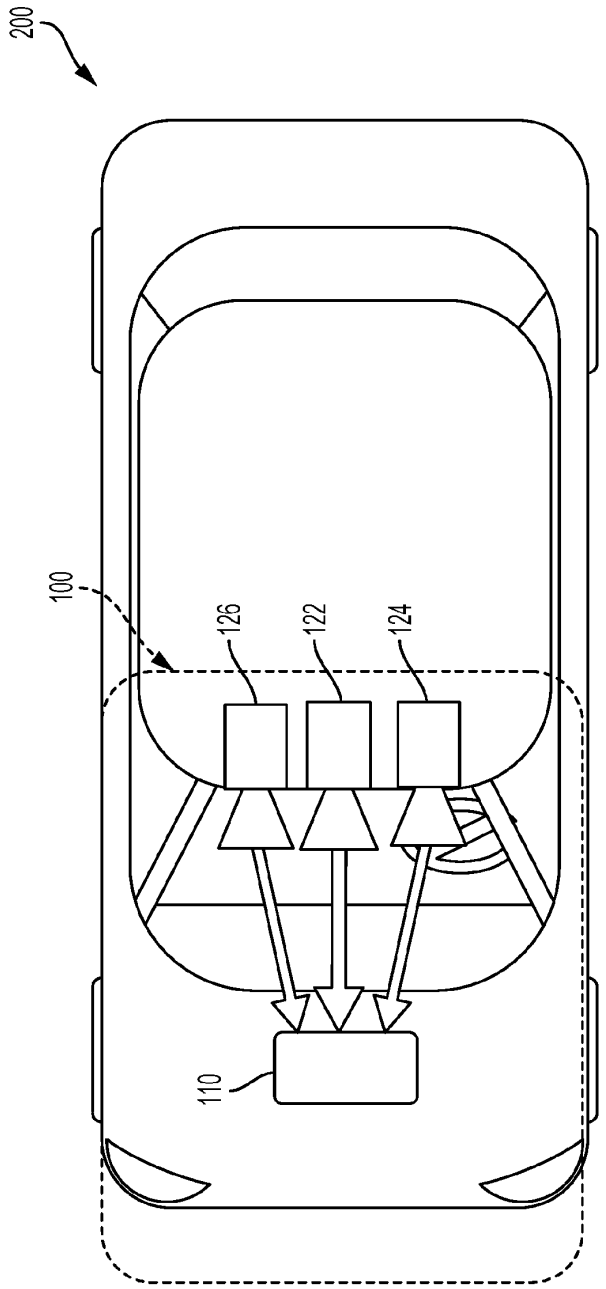

FIG. 2E

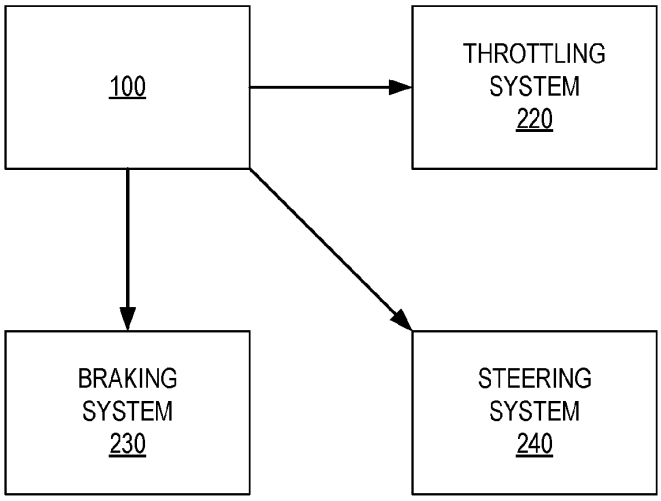
100
THROTTLING SYSTEM 220
BRAKING SYSTEM 230
STEERING SYSTEM 240

FIG. 2F

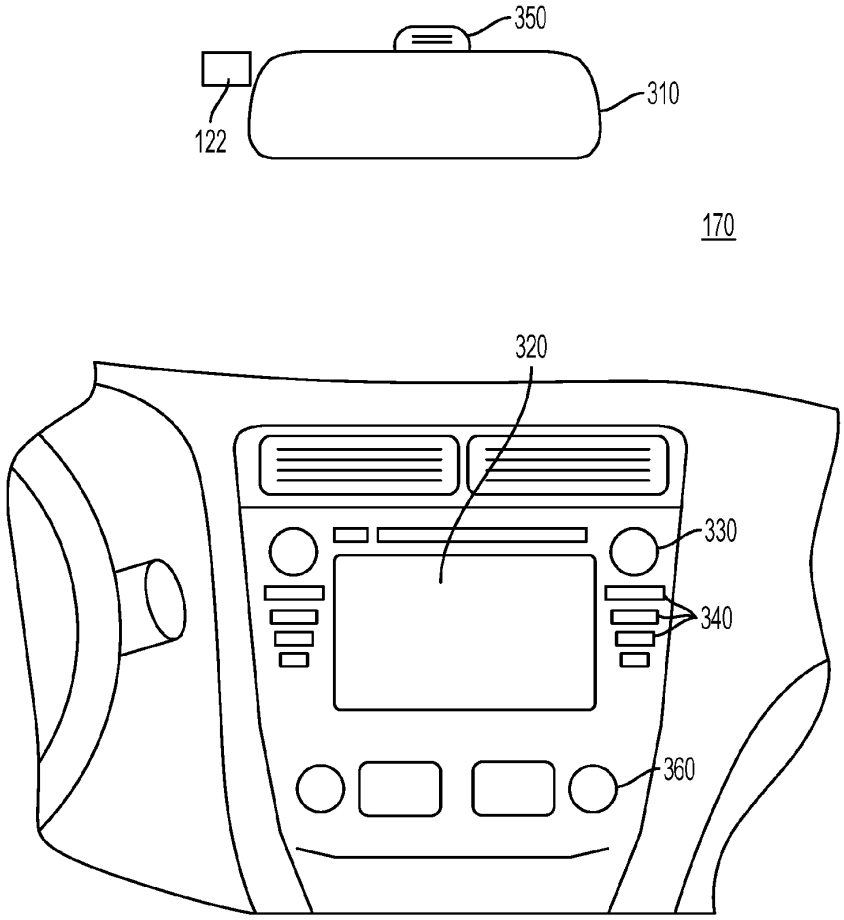

FIG. 3A

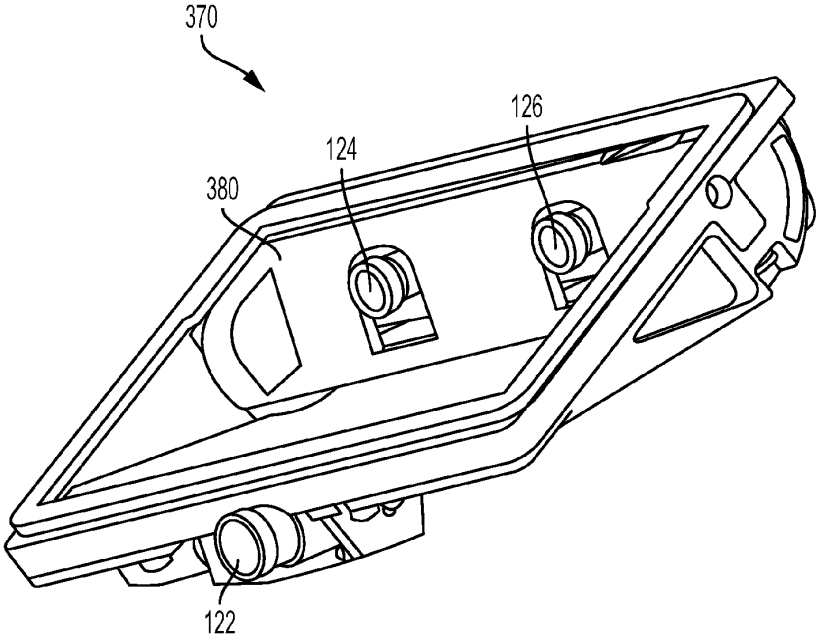

FIG. 3B

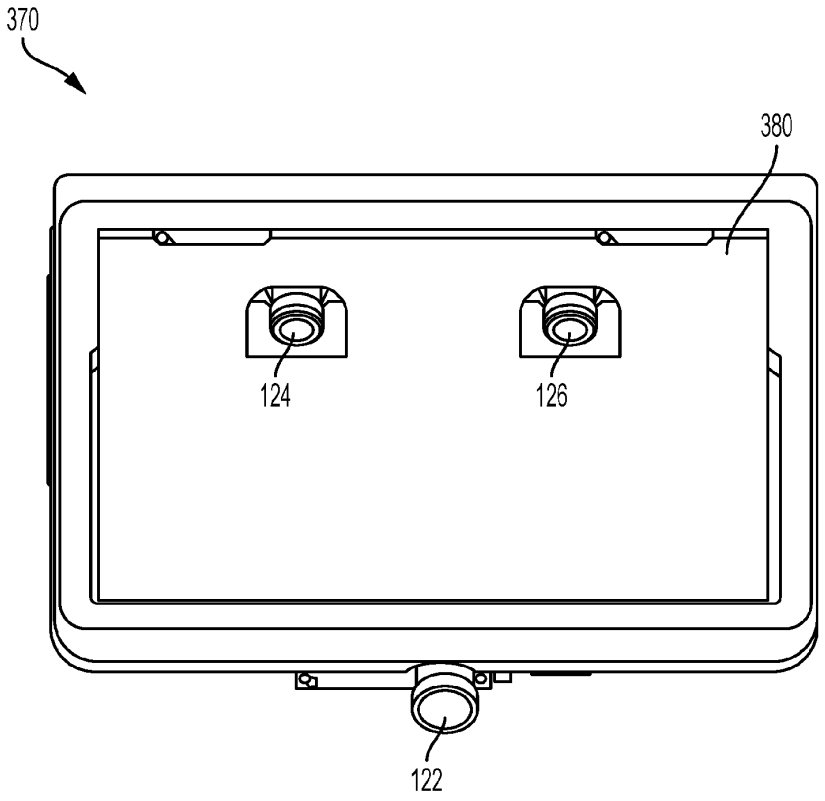

FIG. 3C

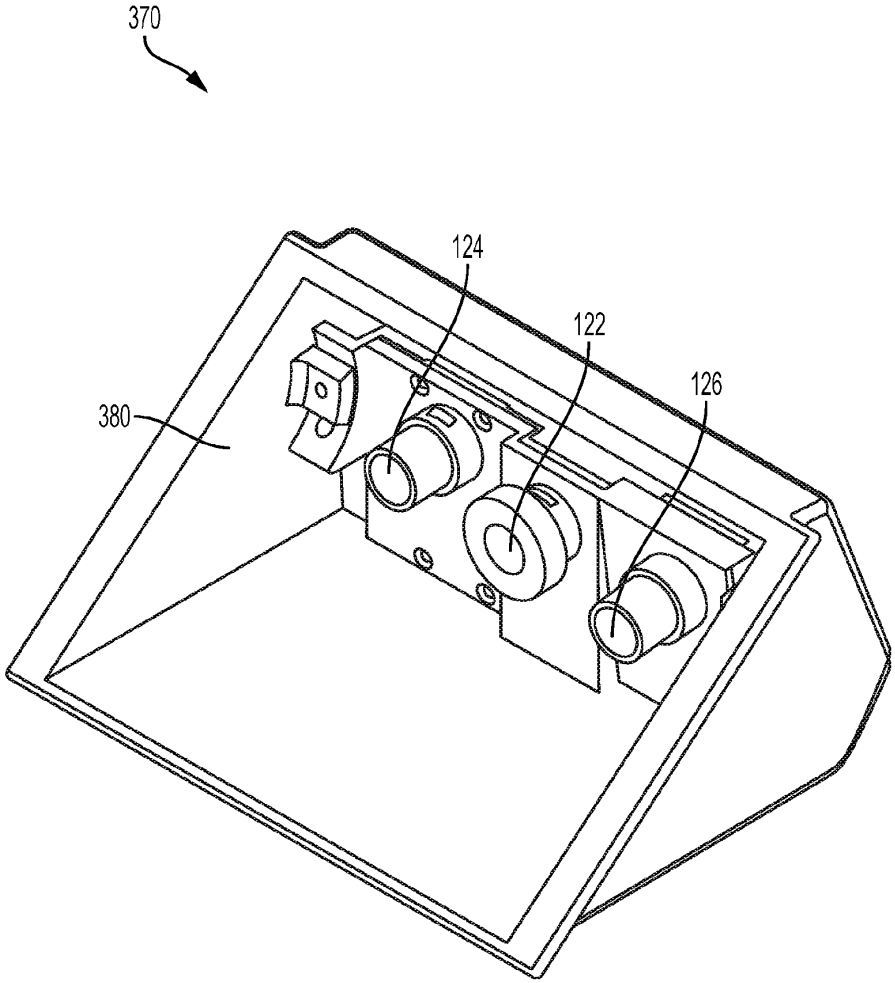

FIG. 3D

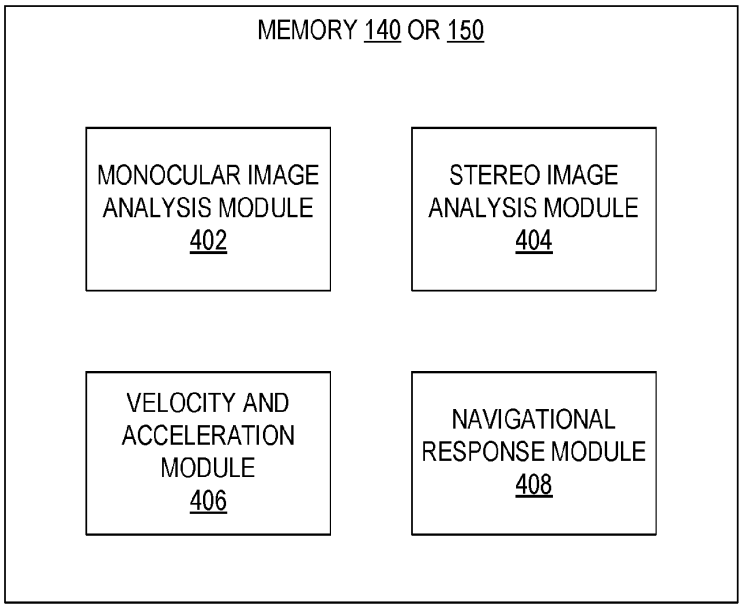
MEMORY 140 OR 150
MONOCULAR IMAGE ANALYSIS MODULE 402
STEREO IMAGE ANALYSIS MODULE 404
VELOCITY AND ACCELERATION MODULE 406
NAVIGATIONAL RESPONSE MODULE 408

FIG. 4

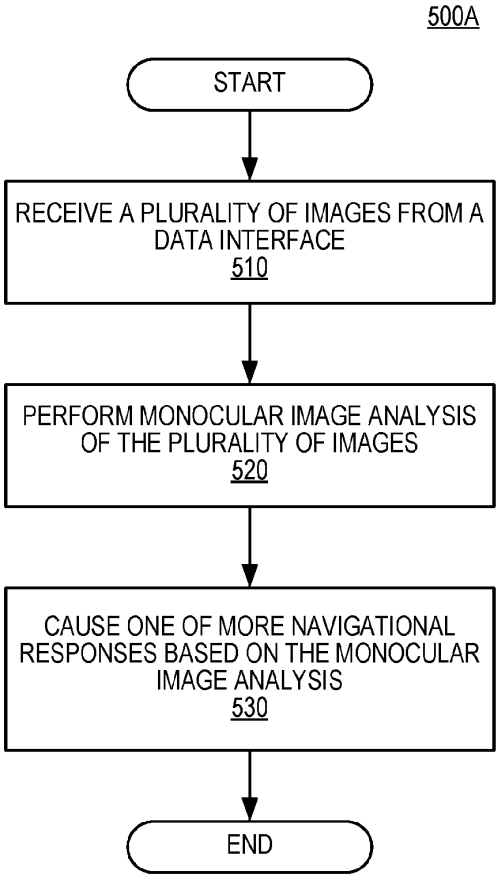
500A
START
RECEIVE A PLURALITY OF IMAGES FROM A DATA INTERFACE
510
PERFORM MONOCULAR IMAGE ANALYSIS OF THE PLURALITY OF IMAGES
520
CAUSE ONE OF MORE NAVIGATIONAL RESPONSES BASED ON THE MONOCULAR IMAGE ANALYSIS
530
END

FIG. 5A

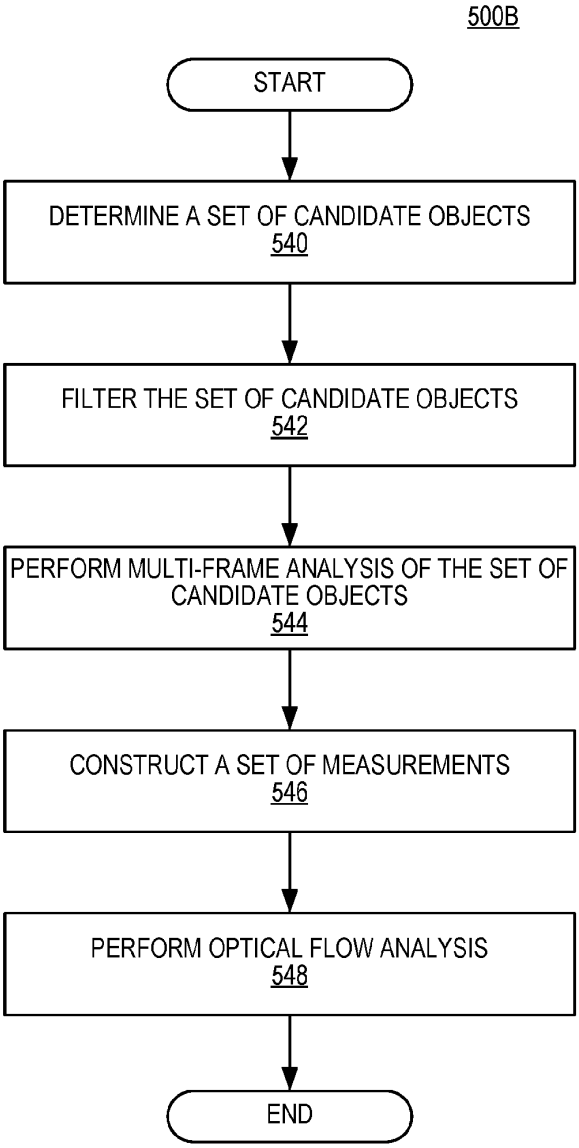
500B
START
DETERMINE A SET OF CANDIDATE OBJECTS
540
FILTER THE SET OF CANDIDATE OBJECTS
542
PERFORM MULTI-FRAME ANALYSIS OF THE SET OF CANDIDATE OBJECTS
544
CONSTRUCT A SET OF MEASUREMENTS
546
PERFORM OPTICAL FLOW ANALYSIS
548
END

FIG. 5B

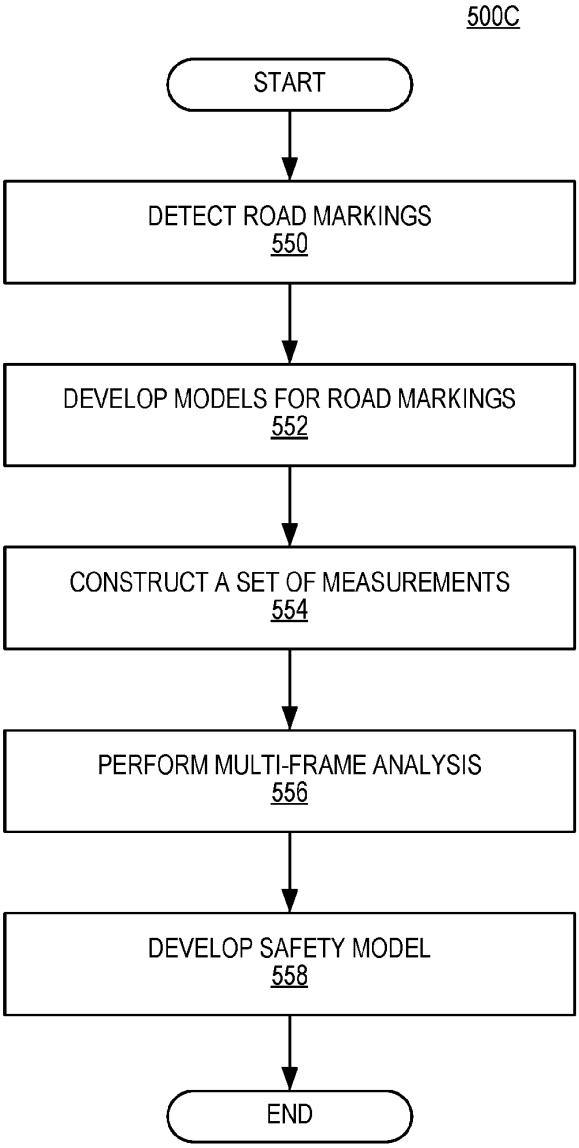
500C
START
DETECT ROAD MARKINGS
550
DEVELOP MODELS FOR ROAD MARKINGS
552
CONSTRUCT A SET OF MEASUREMENTS
554
PERFORM MULTI-FRAME ANALYSIS
556
DEVELOP SAFETY MODEL
558
END

FIG. 5C

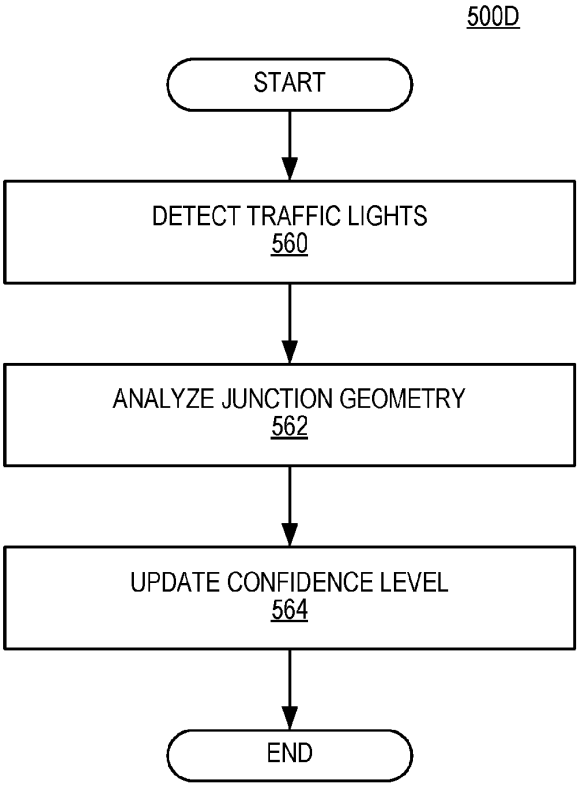
500D
START
DETECT TRAFFIC LIGHTS
560
ANALYZE JUNCTION GEOMETRY
562
UPDATE CONFIDENCE LEVEL
564
END

FIG. 5D

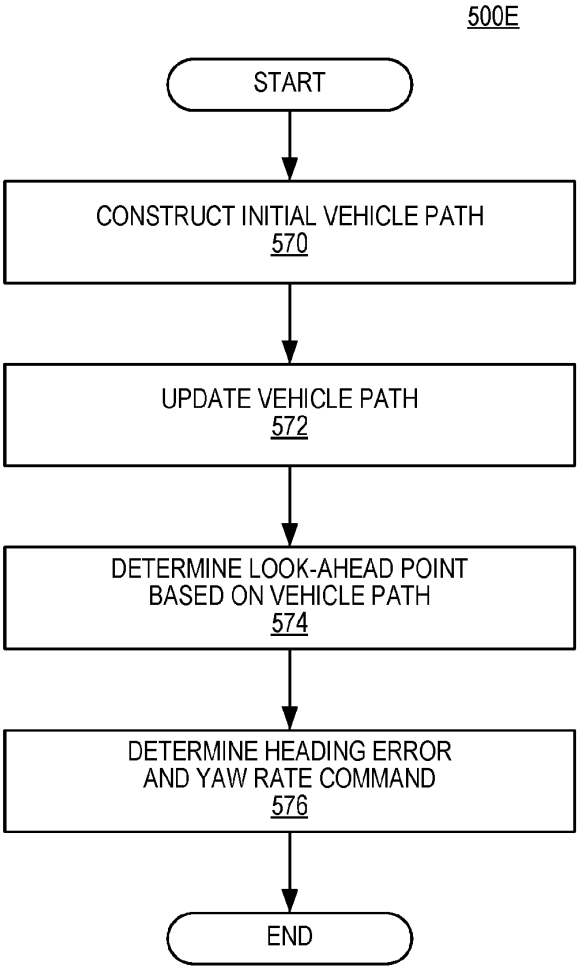
500E
START
CONSTRUCT INITIAL VEHICLE PATH
570
UPDATE VEHICLE PATH
572
DETERMINE LOOK-AHEAD POINT
BASED ON VEHICLE PATH
574
DETERMINE HEADING ERROR
AND YAW RATE COMMAND
576
END

FIG. 5E

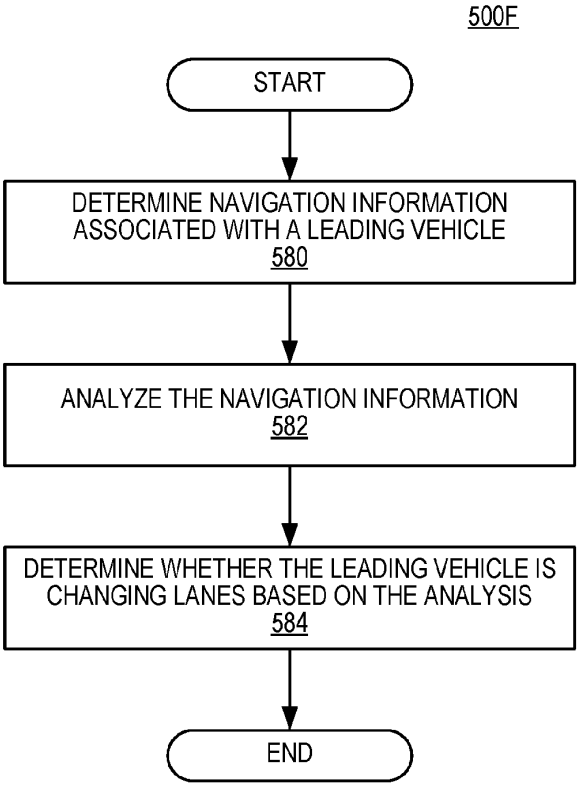
500F
START
DETERMINE NAVIGATION INFORMATION ASSOCIATED WITH A LEADING VEHICLE
580
ANALYZE THE NAVIGATION INFORMATION
582
DETERMINE WHETHER THE LEADING VEHICLE IS CHANGING LANES BASED ON THE ANALYSIS
584
END

FIG. 5F

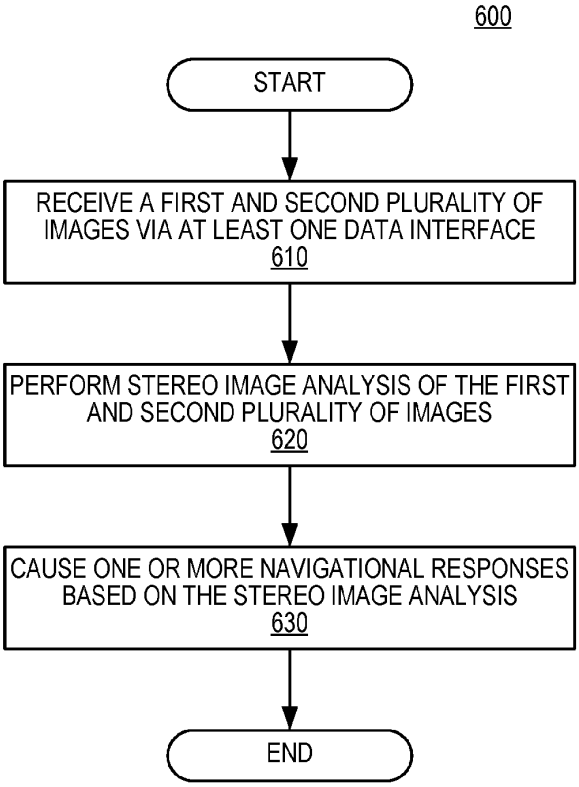
600
START
RECEIVE A FIRST AND SECOND PLURALITY OF IMAGES VIA AT LEAST ONE DATA INTERFACE
610
PERFORM STEREO IMAGE ANALYSIS OF THE FIRST AND SECOND PLURALITY OF IMAGES
620
CAUSE ONE OR MORE NAVIGATIONAL RESPONSES BASED ON THE STEREO IMAGE ANALYSIS
630
END

FIG. 6

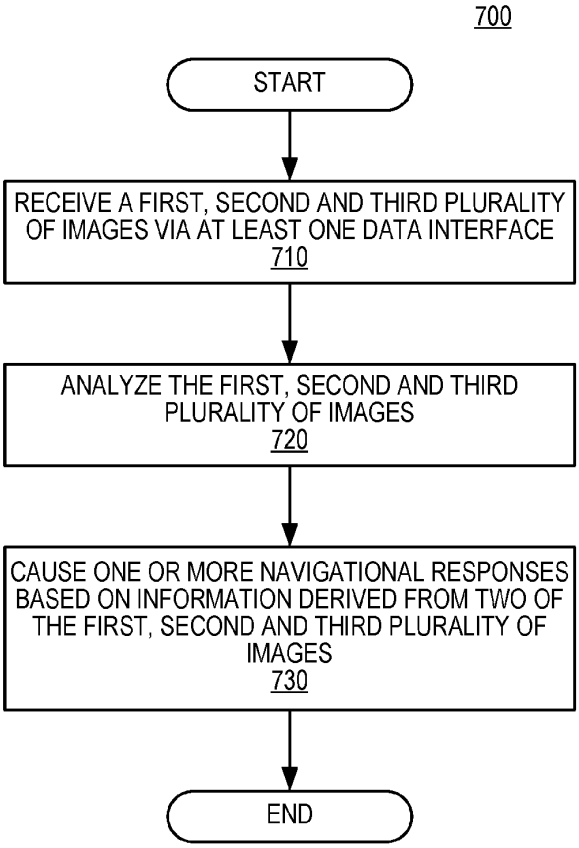
700
START
RECEIVE A FIRST, SECOND AND THIRD PLURALITY OF IMAGES VIA AT LEAST ONE DATA INTERFACE
710
ANALYZE THE FIRST, SECOND AND THIRD PLURALITY OF IMAGES
720
CAUSE ONE OR MORE NAVIGATIONAL RESPONSES BASED ON INFORMATION DERIVED FROM TWO OF THE FIRST, SECOND AND THIRD PLURALITY OF IMAGES
730
END

FIG. 7

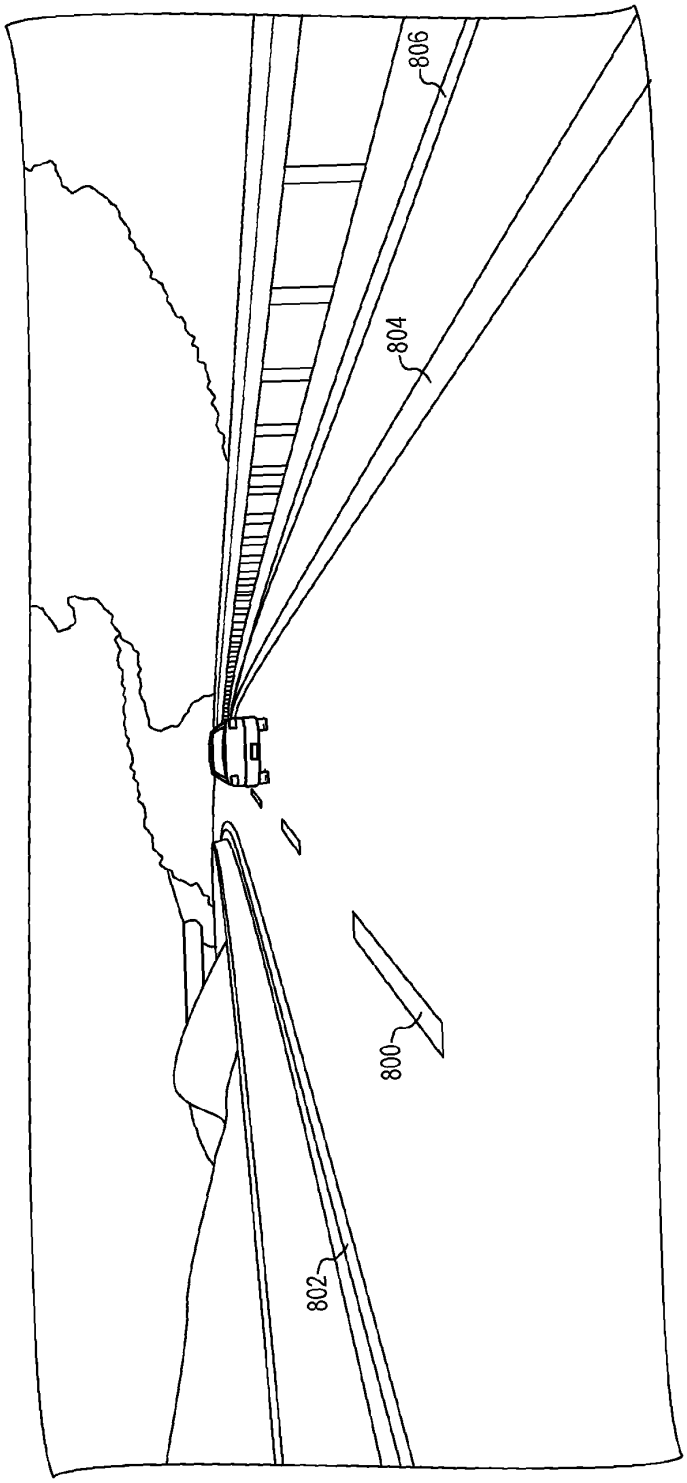

FIG. 8A

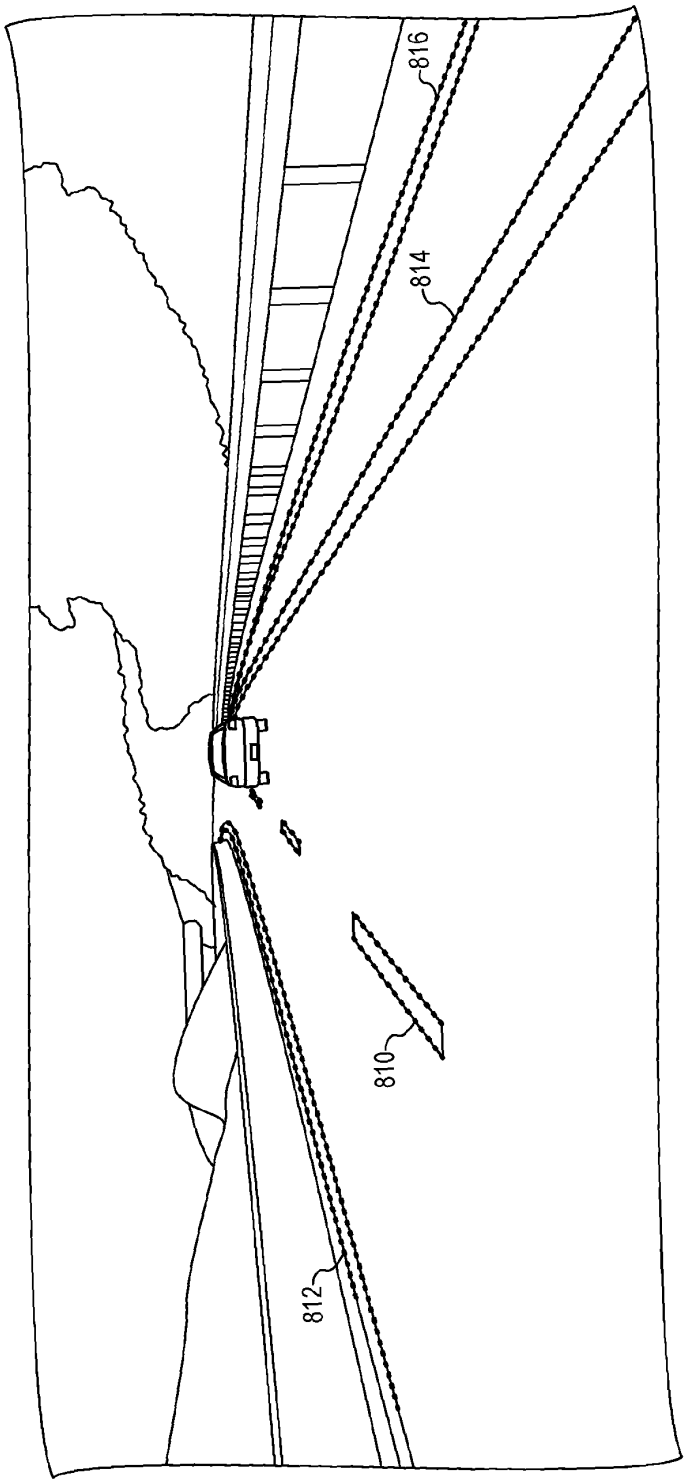

FIG. 8B

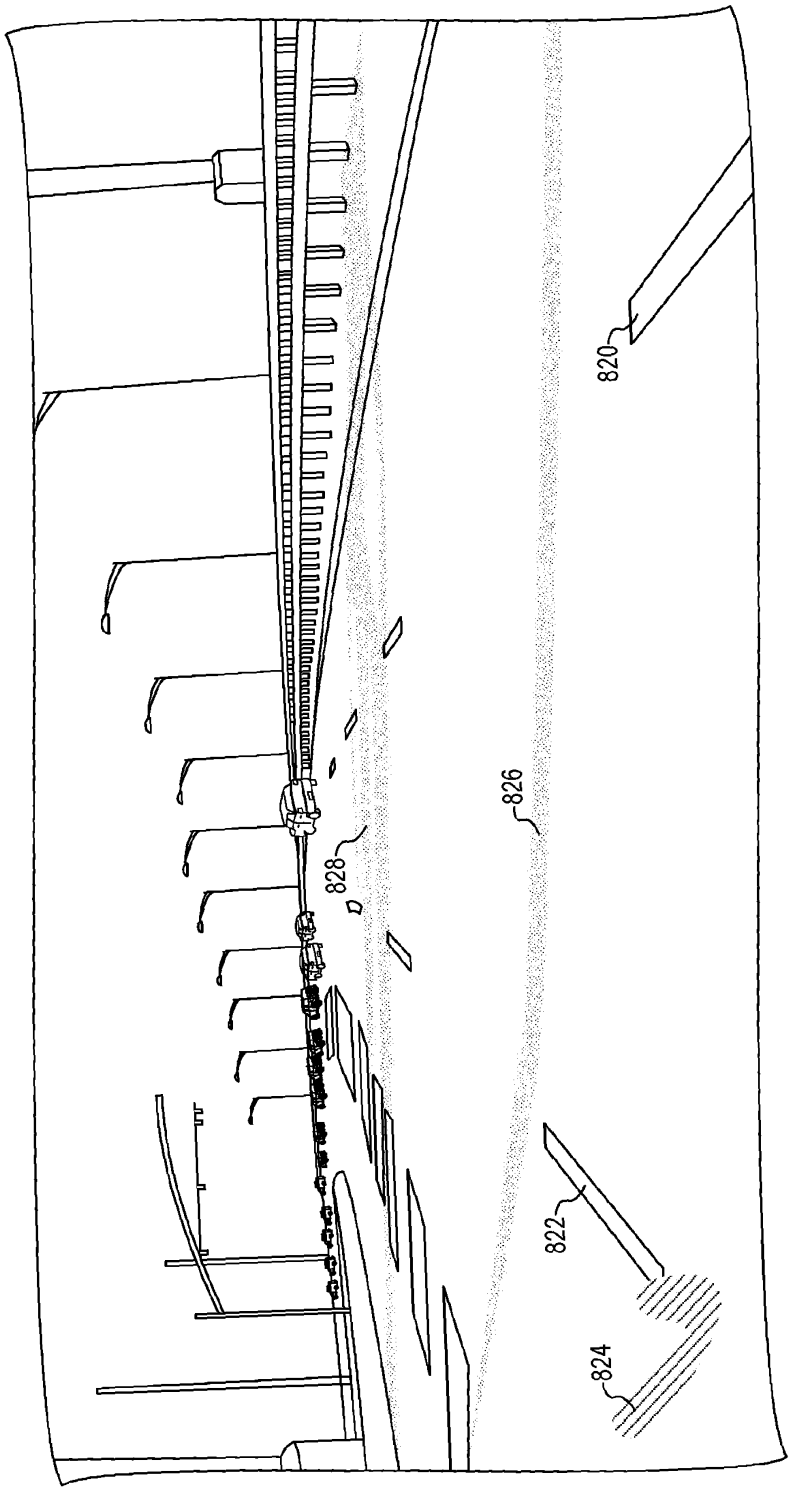

FIG. 8C

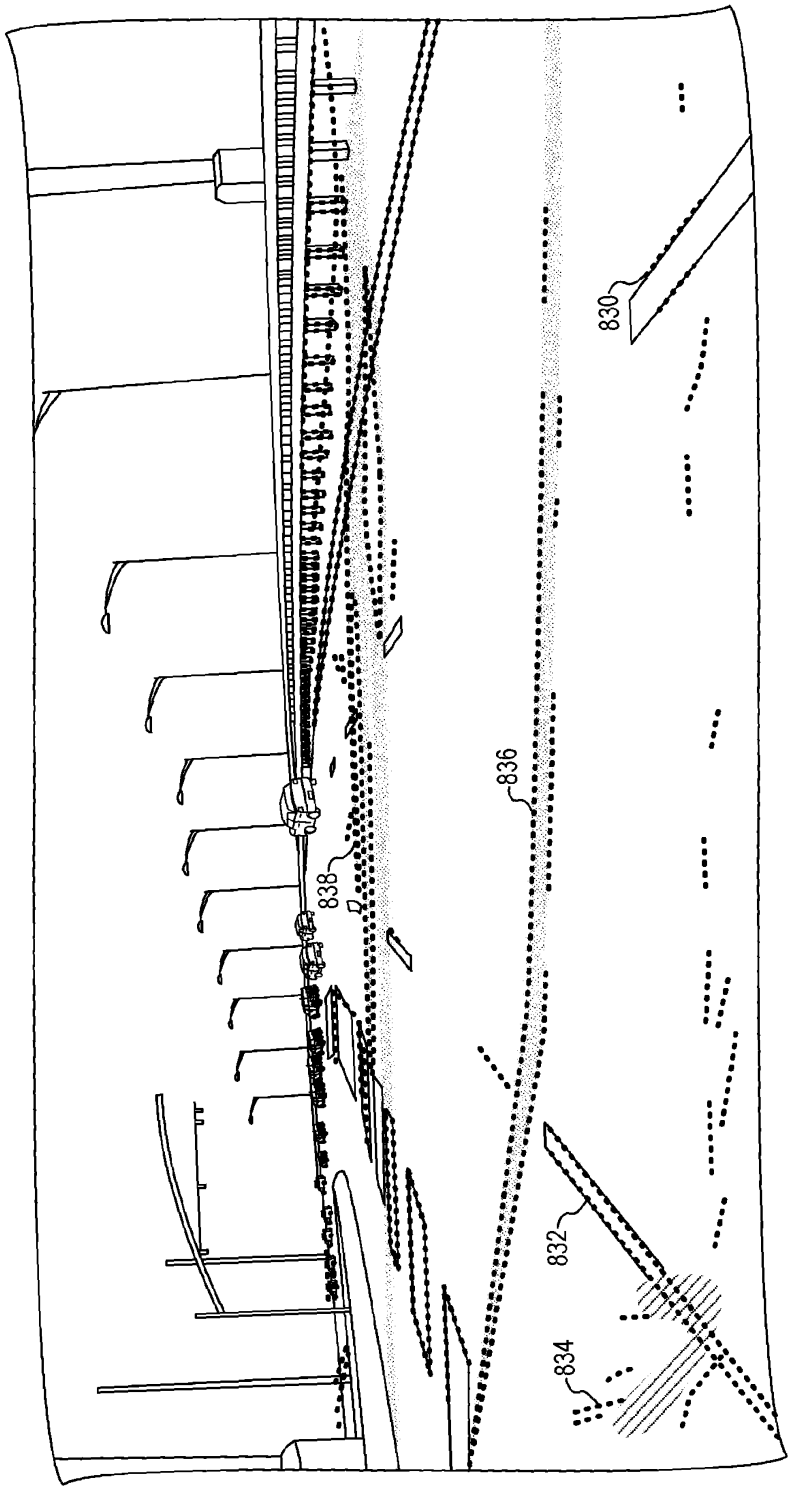

FIG. 8D

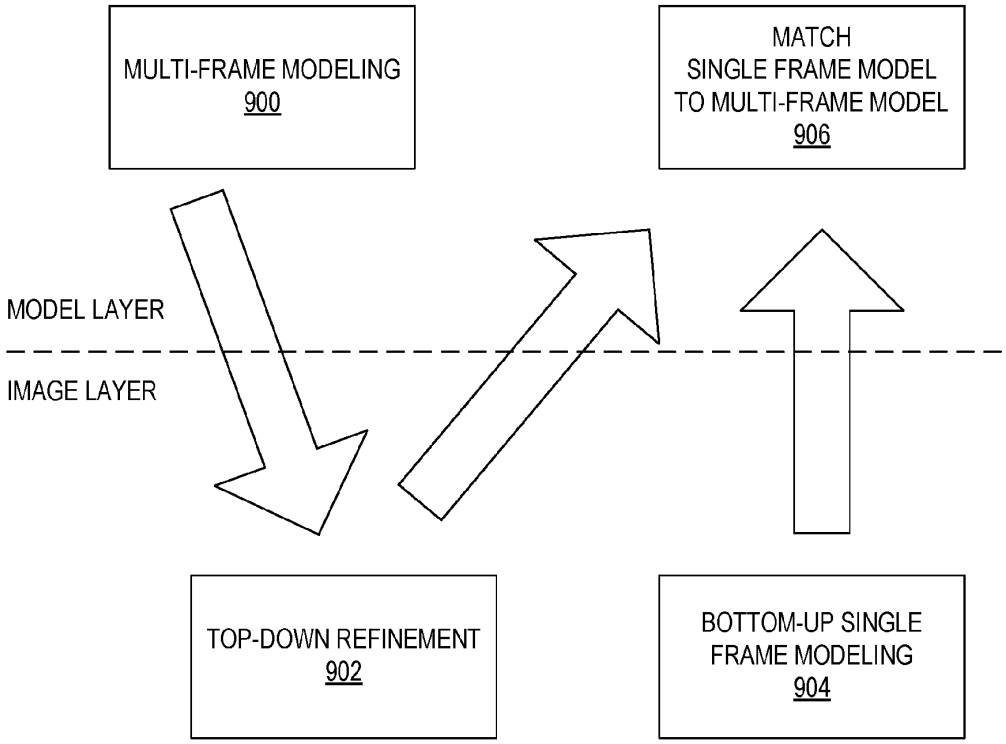
MULTI-FRAME MODELING
900
MATCH
SINGLE FRAME MODEL
TO MULTI-FRAME MODEL
906
MODEL LAYER
IMAGE LAYER
TOP-DOWN REFINEMENT
902
BOTTOM-UP SINGLE
FRAME MODELING
904

FIG. 9

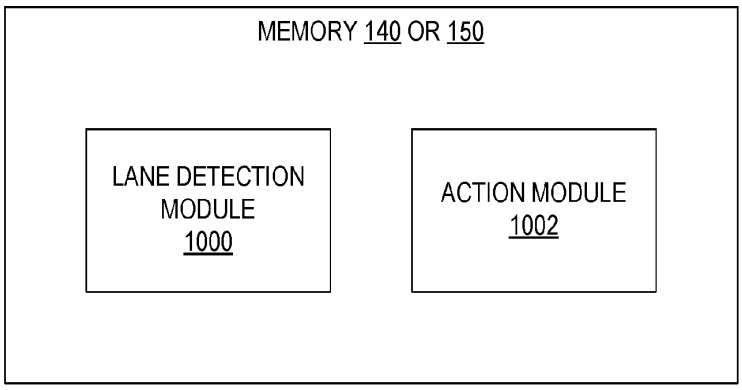
MEMORY 140 OR 150
LANE DETECTION MODULE 1000
ACTION MODULE 1002

FIG. 10A

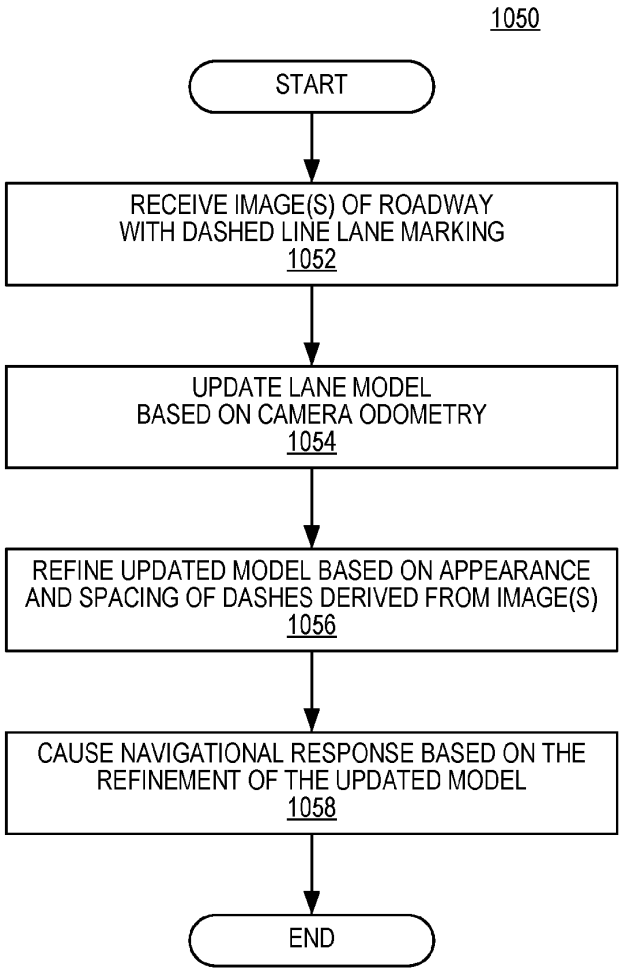
1050
START
RECEIVE IMAGE(S) OF ROADWAY WITH DASHED LINE LANE MARKING
1052
UPDATE LANE MODEL BASED ON CAMERA ODOMETRY
1054
REFINE UPDATED MODEL BASED ON APPEARANCE AND SPACING OF DASHES DERIVED FROM IMAGE(S)
1056
CAUSE NAVIGATIONAL RESPONSE BASED ON THE REFINEMENT OF THE UPDATED MODEL
1058
END

FIG. 10B

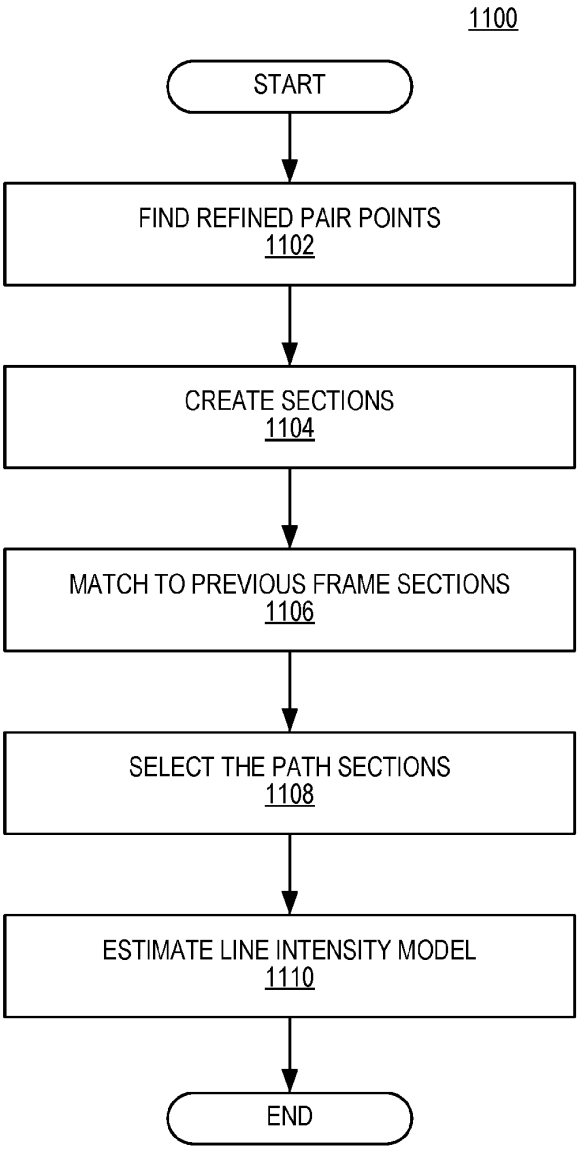
1100
START
FIND REFINED PAIR POINTS
1102
CREATE SECTIONS
1104
MATCH TO PREVIOUS FRAME SECTIONS
1106
SELECT THE PATH SECTIONS
1108
ESTIMATE LINE INTENSITY MODEL
1110
END

FIG. 11A

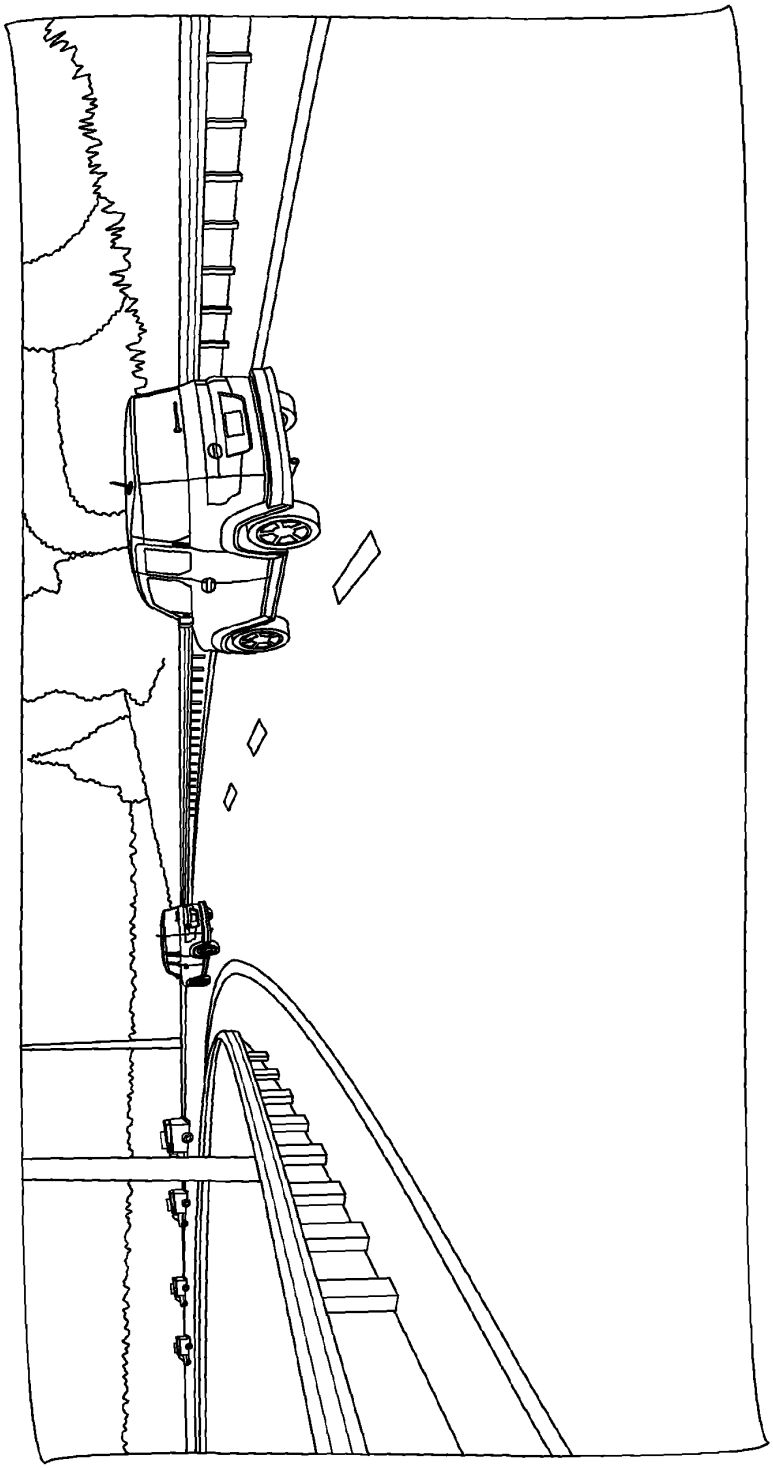

FIG. 11B

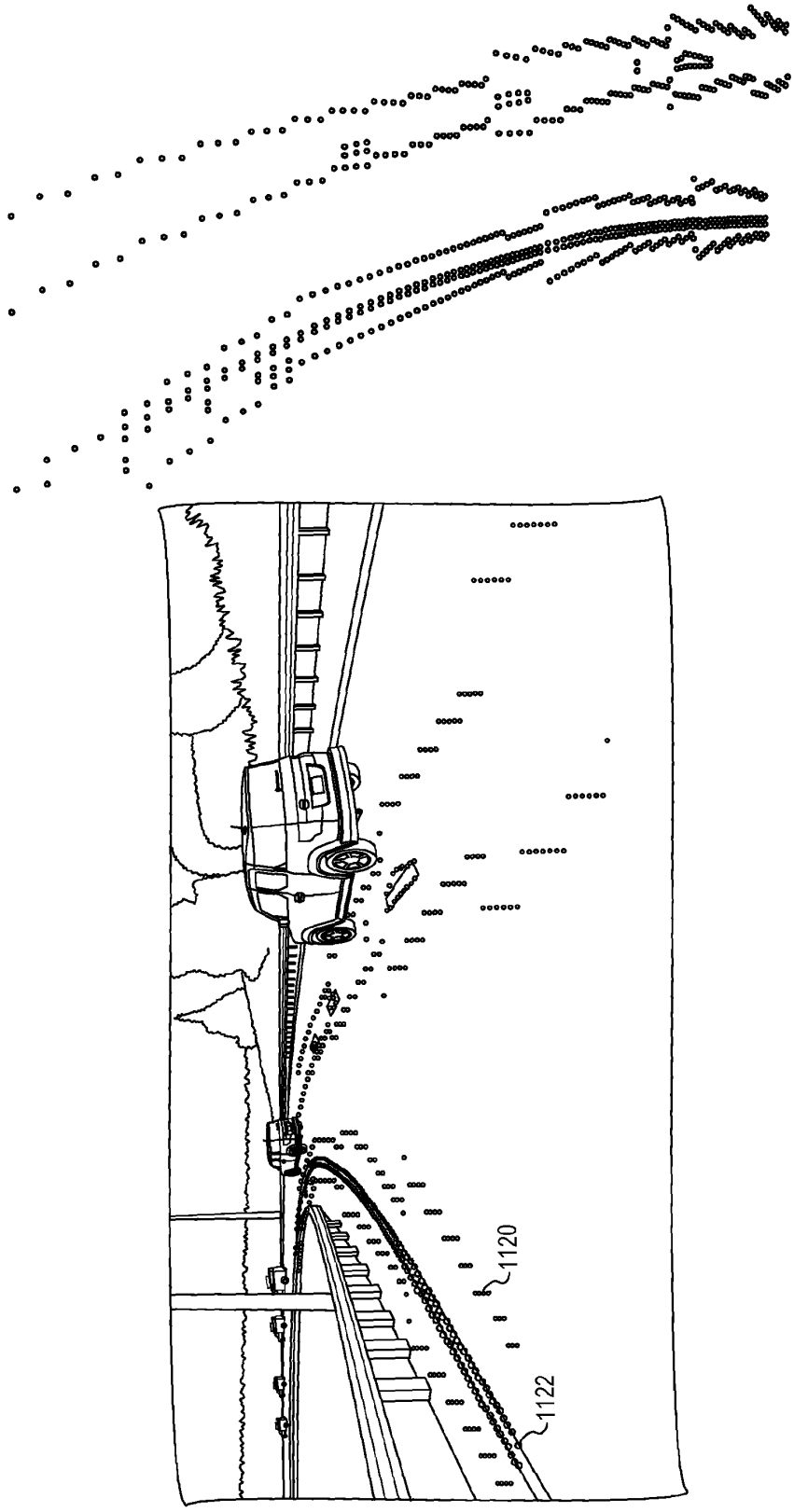

FIG. 11C

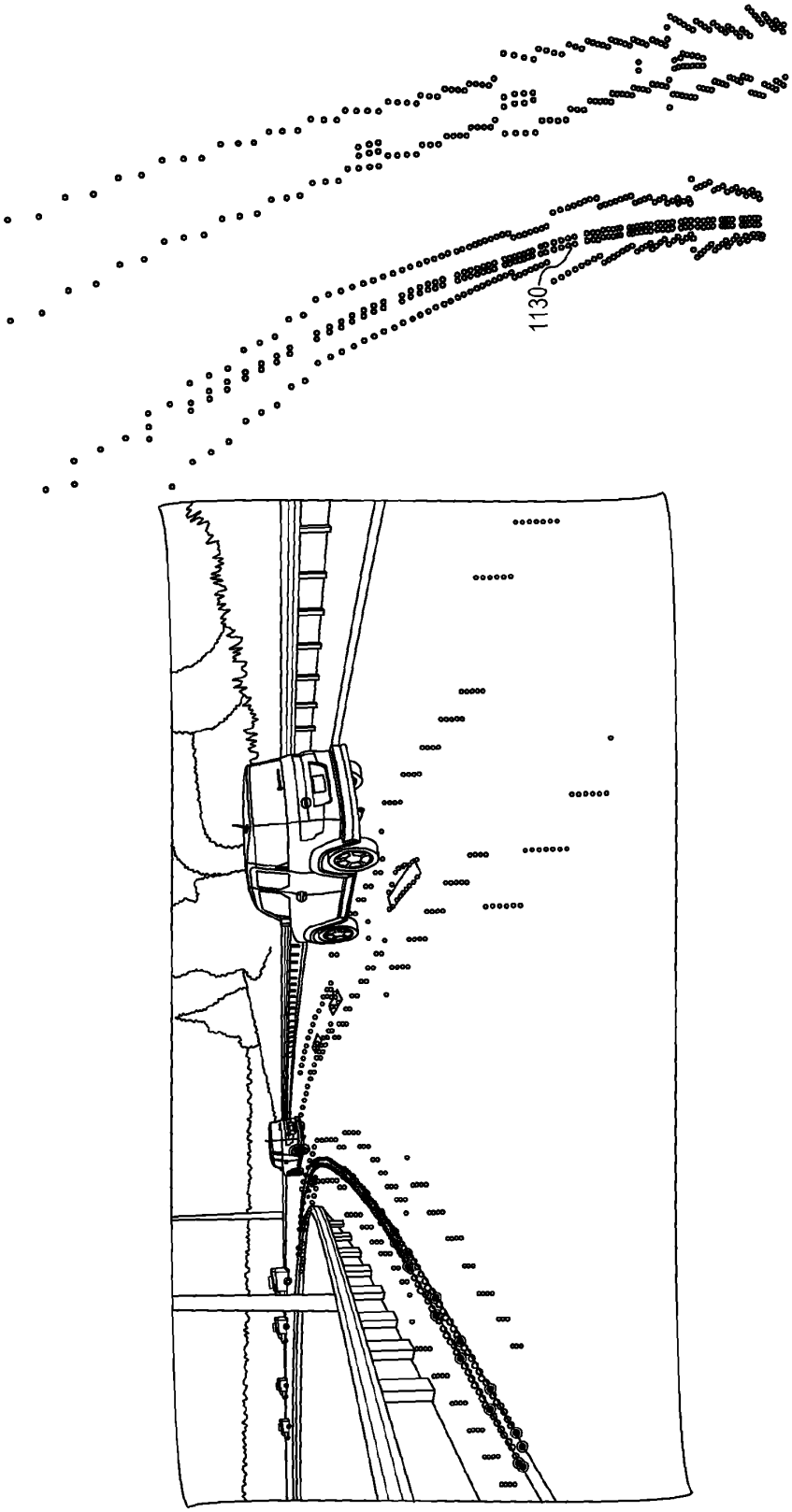

FIG. 11D

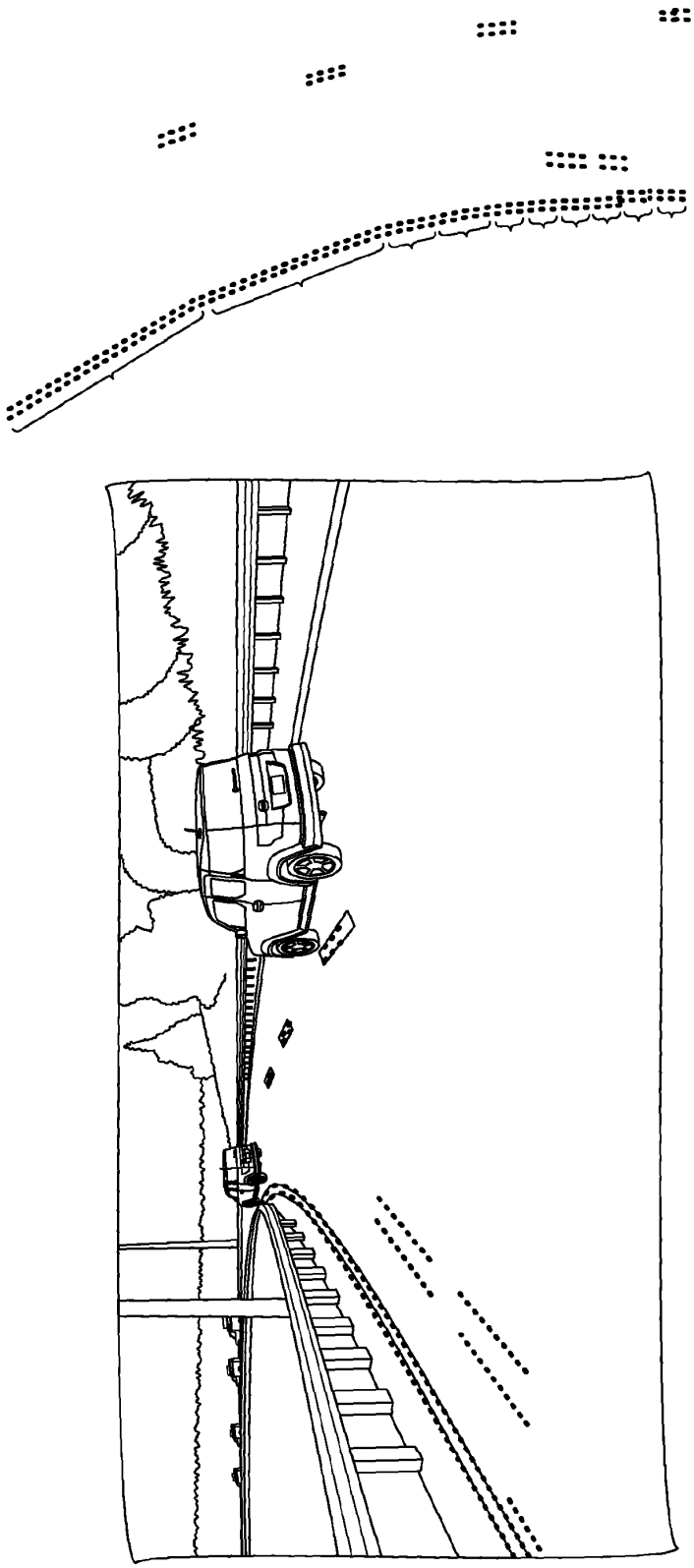

FIG. 11E

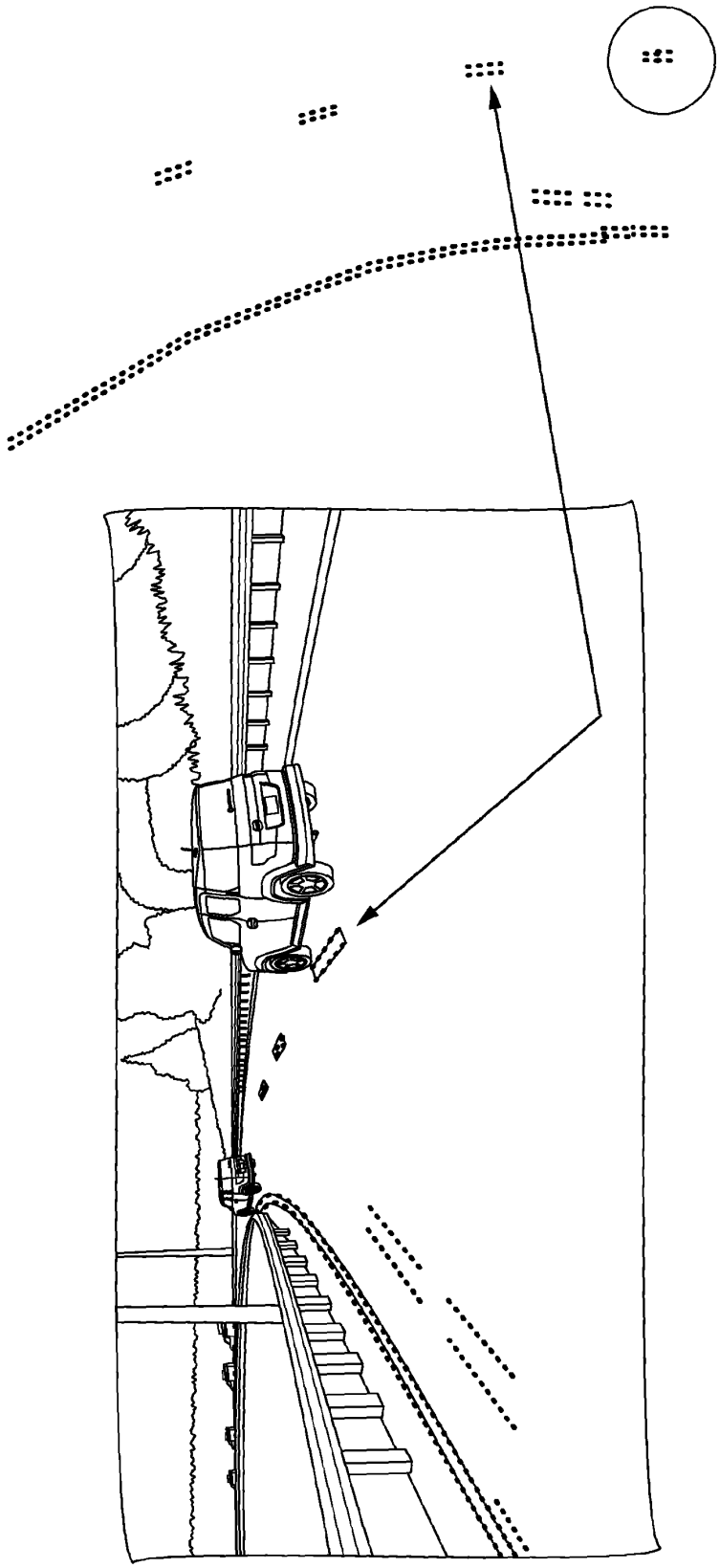

FIG. 11F

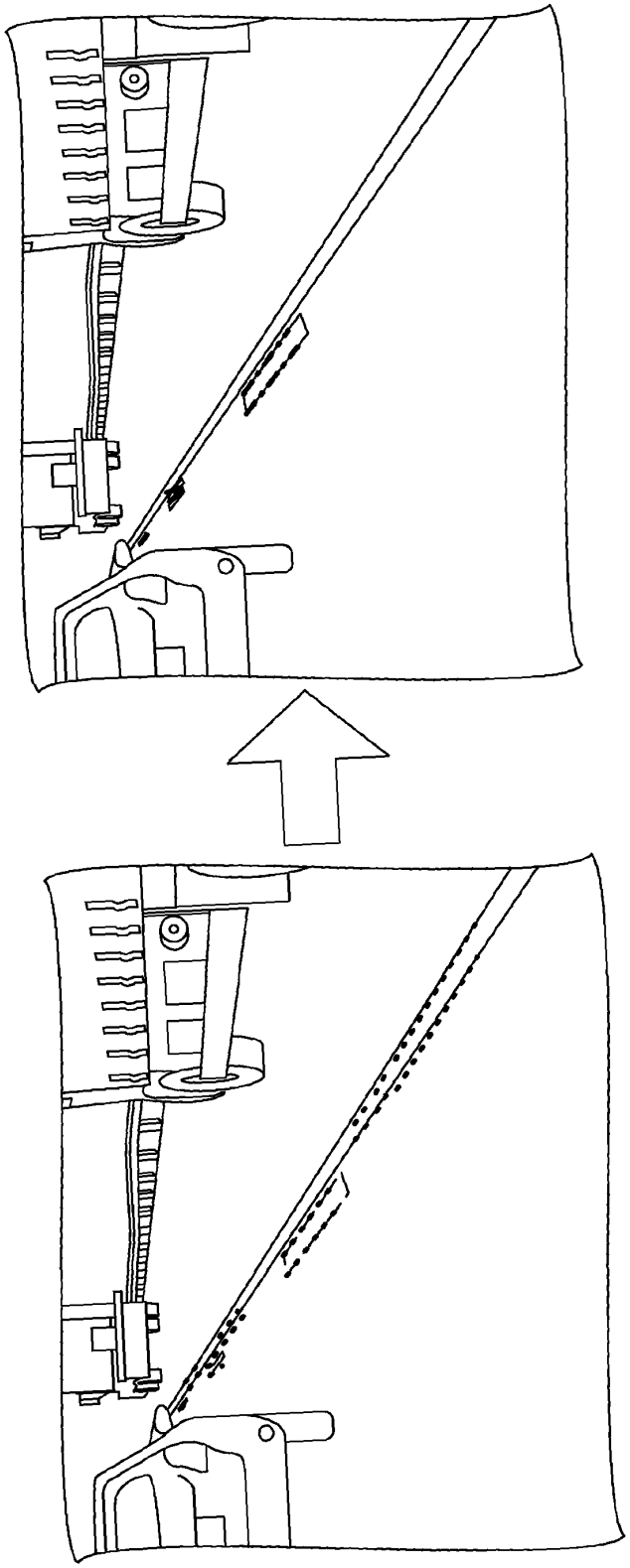

FIG. 11G

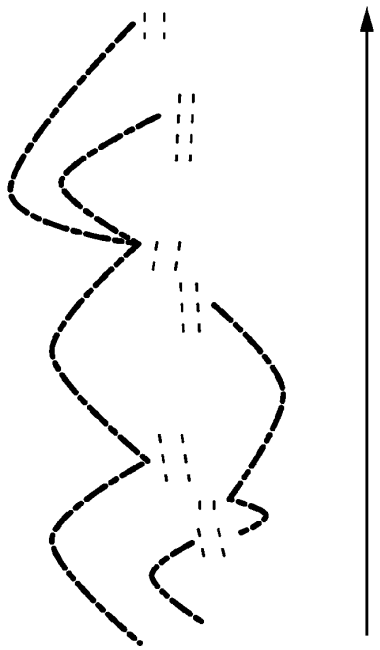

FIG. 11H

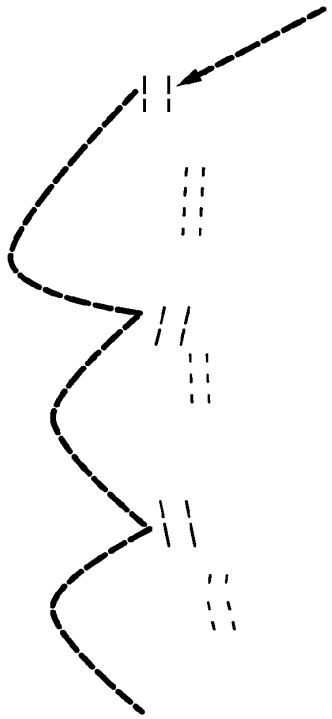

FIG. 11I

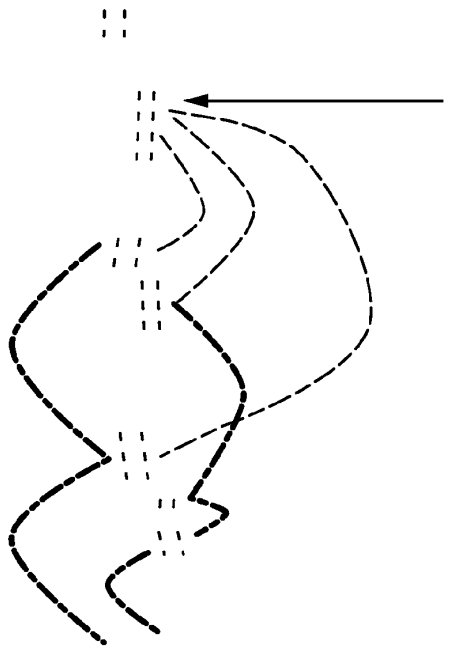

FIG. 11J

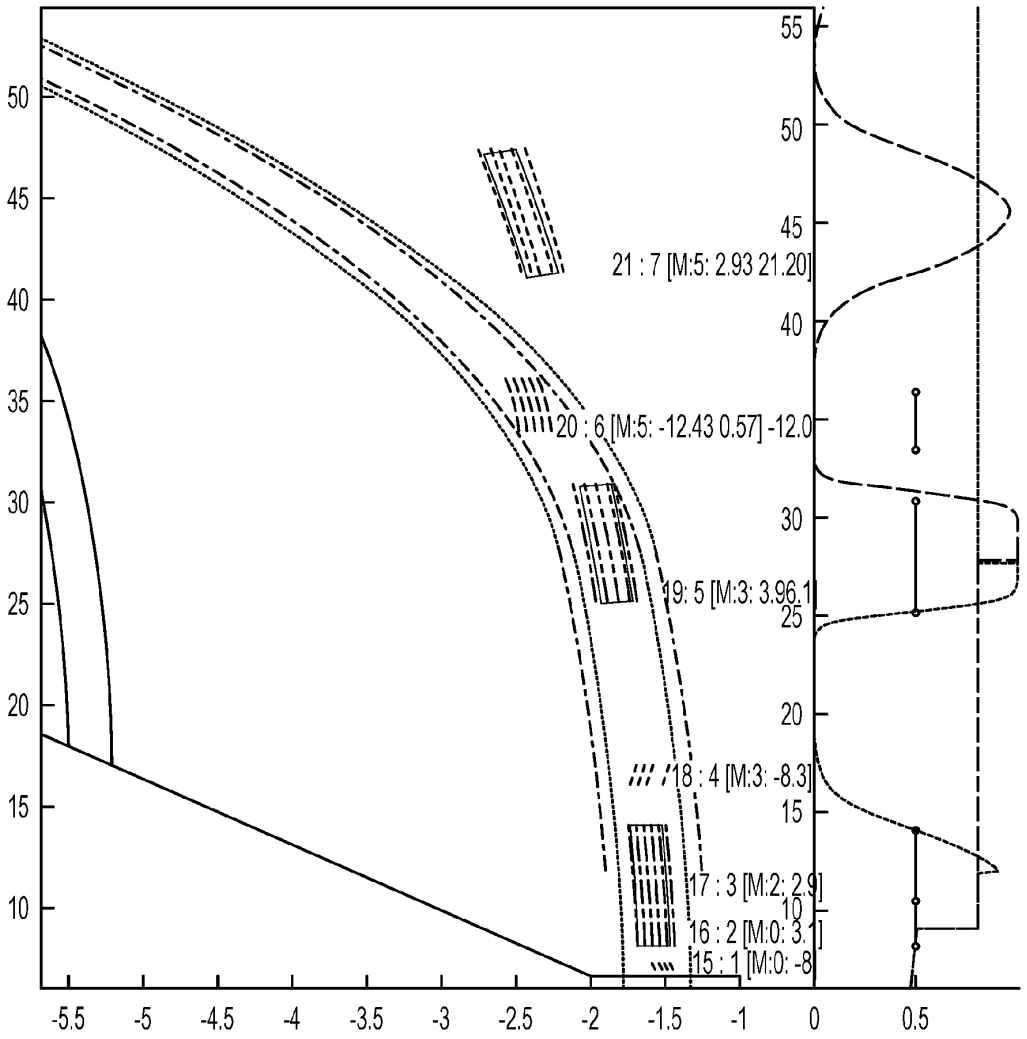
21 : 7 [M:5: 2.93 21.20]
20 : 6 [M:5: -12.43 0.57] -12.0
19: 5 [M:3: 3.96,1
18 : 4 [M:3: -8.3]
17 : 3 [M:2: 2.9]
16 : 2 [M:0: 3.1]
15 : 1 [M:0: -8
50
45
40
35
30
25
20
15
10
55
-5.5
-5
-4.5
-4
-3.5
-3
-2.5
-2
-1.5
-1
0
0.5

FIG. 11K

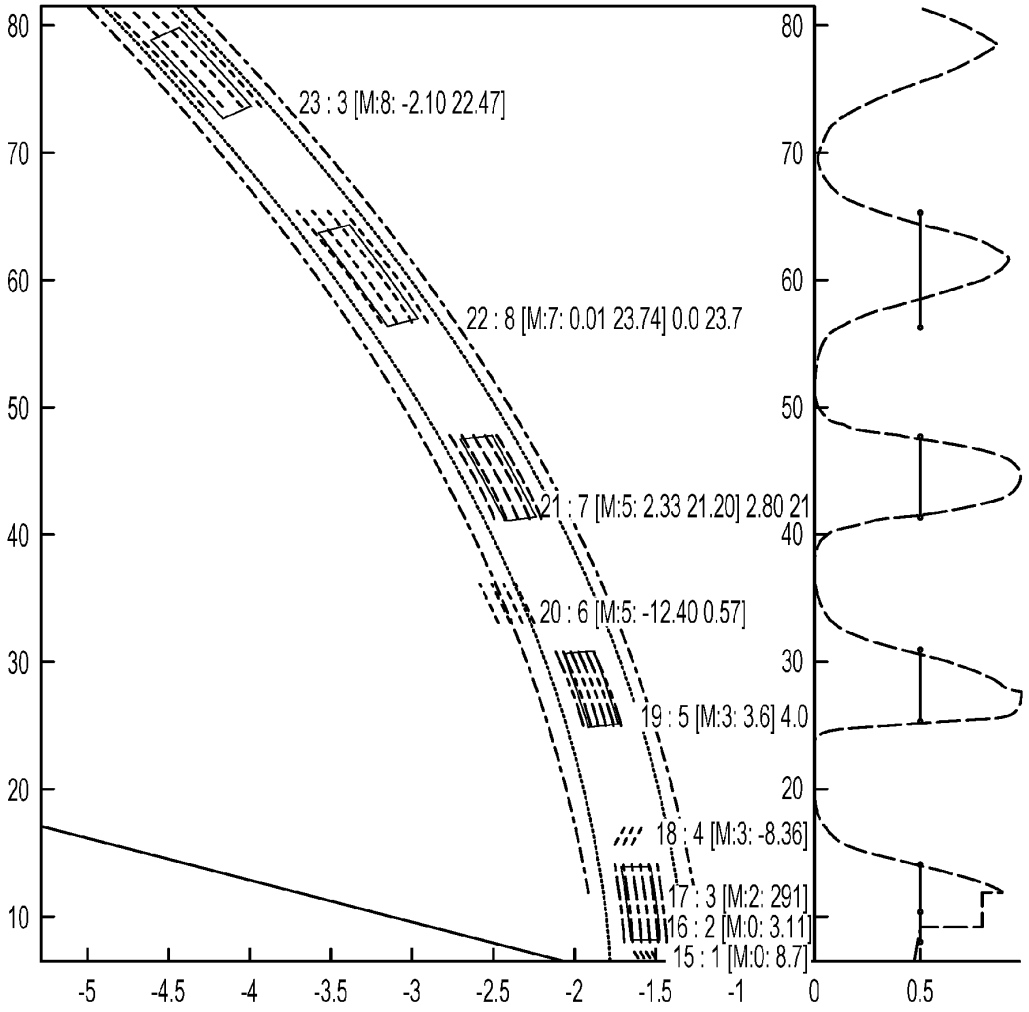
23 : 3 [M:8: -2.10 22.47]
22 : 8 [M:7: 0.01 23.74] 0.0 23.7
21 : 7 [M:5: 2.33 21.20] 2.80 21
20 : 6 [M:5: -12.40 0.57]
19 : 5 [M:3: 3.6] 4.0
18 : 4 [M:3: -8.36]
17 : 3 [M:2: 291]
16 : 2 [M:0: 3.11]
15 : 1 [M:0: 8.7]
80
70
60
50
40
30
20
10
-5
-4.5
-4
-3.5
-3
-2.5
-2
-1.5
-1
0
0.5

FIG. 11L

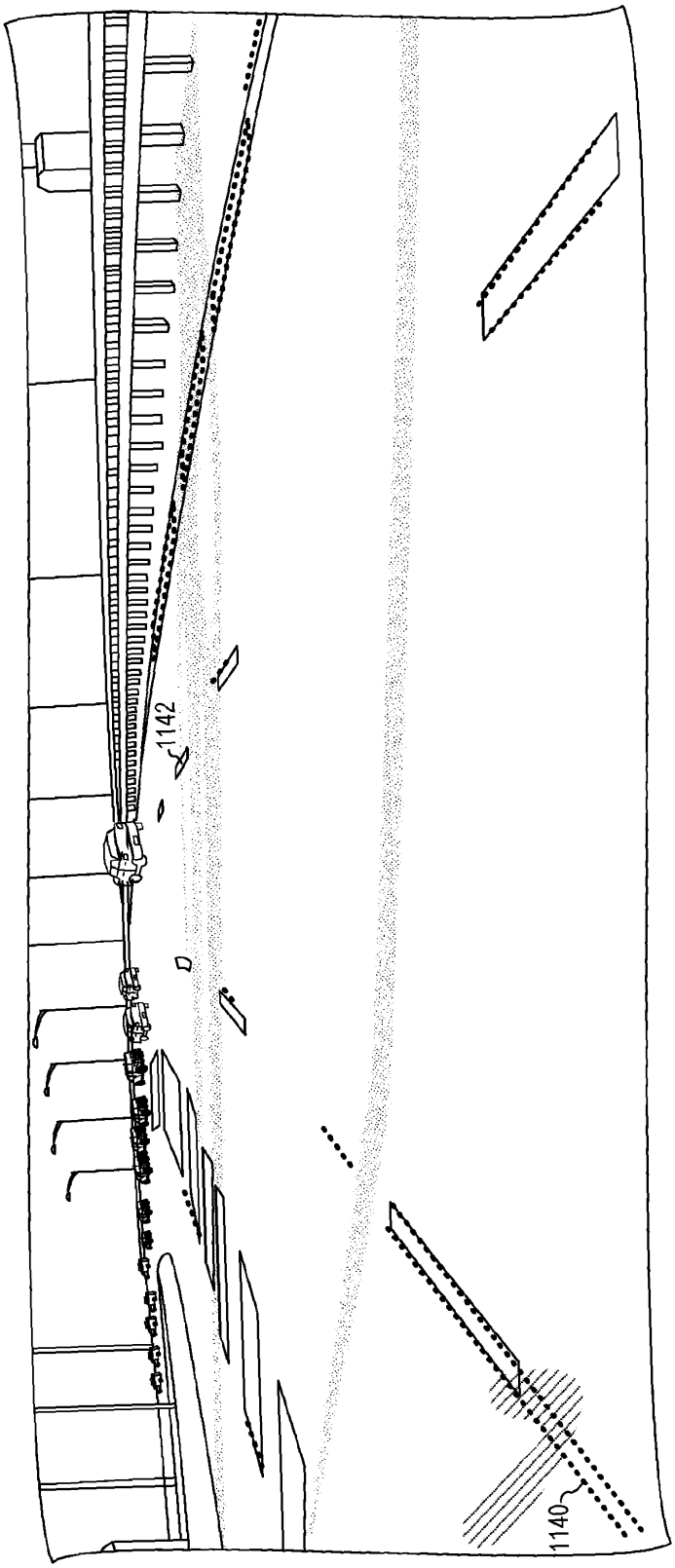

FIG. 11M

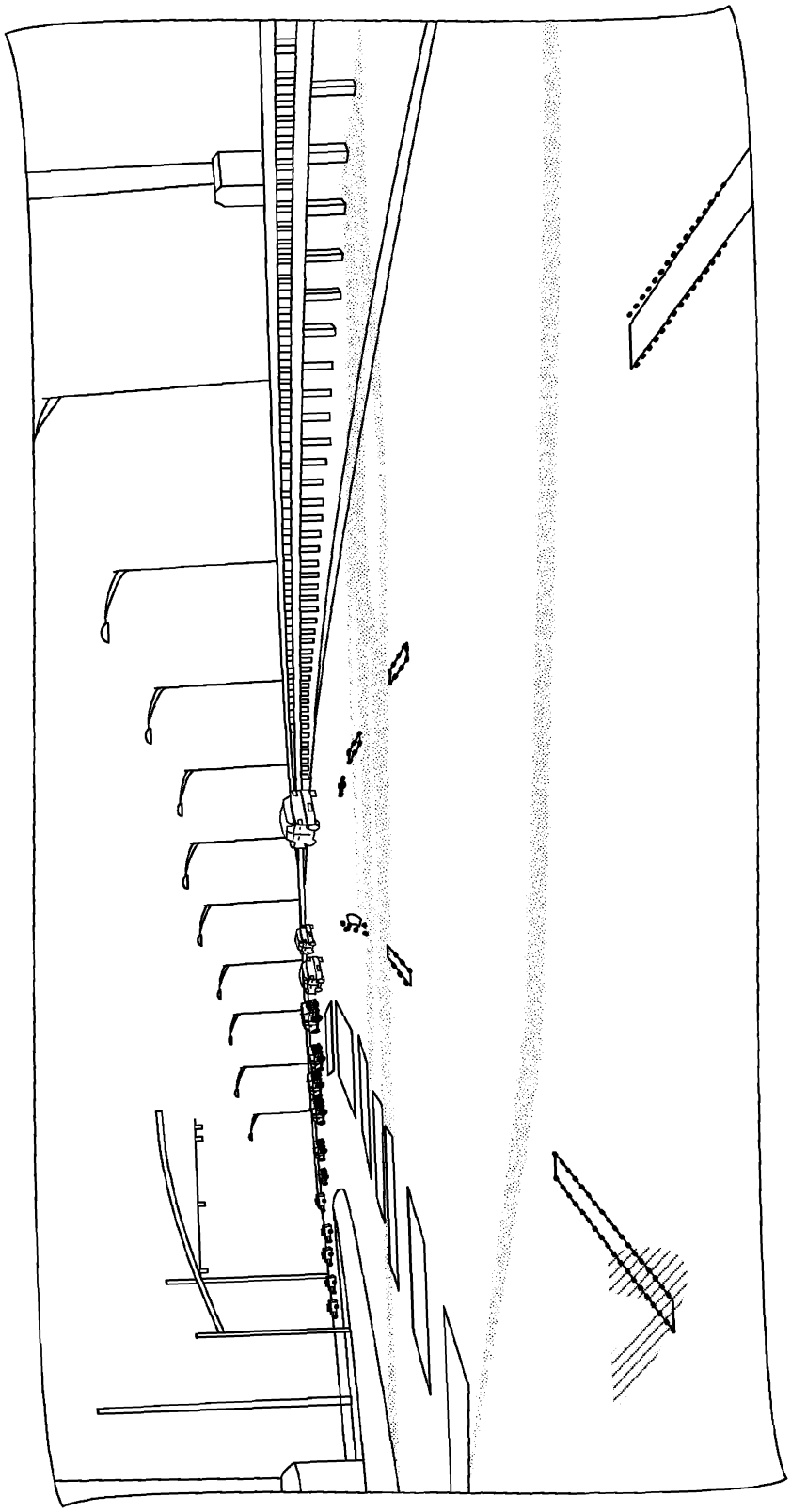

FIG. 11N

INTERNATIONAL SEARCH REPORT

International application No
PCT/IL2015/050590

A. CLASSIFICATION OF SUBJECT MATTER
INV. B60W30/12 G06K9/00 G06K9/32 G06K9/62 G06T7/20
ADD.

According to International Patent Classification (IPC) or to both national classification and IPC

B. FIELDS SEARCHED

Minimum documentation searched (classification system followed by classification symbols)
B60W G06K G06T G05D

Documentation searched other than minimum documentation to the extent that such documents are included in the fields searched

Electronic data base consulted during the international search (name of data base and, where practicable, search terms used)

EPO-Internal, WPI Data

C. DOCUMENTS CONSIDERED TO BE RELEVANT

Category*	Citation of document, with indication, where appropriate, of the relevant passages	Relevant to claim No.
X	US 2013/208945 A1 (NUNN CHRISTIAN [DE] ET AL) 15 August 2013 (2013-08-15)	1,4,5, 7-11,14, 15,17-21
Y	paragraph [0013] paragraph [0025] - paragraph [0026] paragraph [0035] - paragraph [0043]; figures 2, 3, 4 -----	2,3,6, 12,13, 16,22
Y	WO 2008/130219 A1 (TELE ATLAS N V [NL]; KMIECIK MARCIN MICHAL [PL]; TABOROWSKI LUKASZ PIO) 30 October 2008 (2008-10-30) page 8, lines 1-13 page 10, lines 7-16; figure 1 page 20, line 3 - page 21, line 13; figures 11, 12 -----	2,3,6, 12,13, 16,22

-/--

[X] Further documents are listed in the continuation of Box C.

[X] See patent family annex.

* Special categories of cited documents :

"A" document defining the general state of the art which is not considered to be of particular relevance

"E" earlier application or patent but published on or after the international filing date

"L" document which may throw doubts on priority claim(s) or which is cited to establish the publication date of another citation or other special reason (as specified)

"O" document referring to an oral disclosure, use, exhibition or other means

"P" document published prior to the international filing date but later than the priority date claimed

"T" later document published after the international filing date or priority date and not in conflict with the application but cited to understand the principle or theory underlying the invention

"X" document of particular relevance; the claimed invention cannot be considered novel or cannot be considered to involve an inventive step when the document is taken alone

"Y" document of particular relevance; the claimed invention cannot be considered to involve an inventive step when the document is combined with one or more other such documents, such combination being obvious to a person skilled in the art

"&" document member of the same patent family

Date of the actual completion of the international search	Date of mailing of the international search report
24 September 2015	30/09/2015

Name and mailing address of the ISA/	Authorized officer
European Patent Office, P.B. 5818 Patentlaan 2 NL - 2280 HV Rijswijk Tel. (+31-70) 340-2040, Fax: (+31-70) 340-3016	Bernard, Eddy

1

Form PCT/ISA/210 (second sheet) (April 2005)

INTERNATIONAL SEARCH REPORT

International application No
PCT/IL2015/050590

C(Continuation). DOCUMENTS CONSIDERED TO BE RELEVANT

Category*	Citation of document, with indication, where appropriate, of the relevant passages	Relevant to claim No.
A	WO 2013/141226 A1 (DENSO CORP) 26 September 2013 (2013-09-26) the whole document -----	1-22
A	US 2013/253753 A1 (BURNETTE DONALD JASON [US] ET AL) 26 September 2013 (2013-09-26) paragraph [0030]; figure 1 paragraph [0043]; figure 3A paragraph [0055]; figures 4, 5 paragraph [0058] - paragraph [0059]; figures 6, 7 -----	1-22
A	WO 01/80068 A1 (MOBILEYE INC [US]) 25 October 2001 (2001-10-25) page 9, line 1 - line 12; figure 2 -----	1-22

1

Form PCT/ISA/210 (continuation of second sheet) (April 2005)

INTERNATIONAL SEARCH REPORT

Information on patent family members

International application No
PCT/IL2015/050590

Patent document cited in search report	Publication date	Patent family member(s)	Publication date
US 2013208945 A1	15-08-2013	EP 2629243 A1	21-08-2013
		US 2013208945 A1	15-08-2013
WO 2008130219 A1	30-10-2008	AU 2008241689 A1	30-10-2008
		CA 2684416 A1	30-10-2008
		CN 101689296 A	31-03-2010
		EP 2137693 A1	30-12-2009
		JP 2010530997 A	16-09-2010
		RU 2009142604 A	27-05-2011
		US 2010086174 A1	08-04-2010
		WO 2008130219 A1	30-10-2008
		WO 2008130233 A1	30-10-2008
WO 2013141226 A1	26-09-2013	JP 2013196341 A	30-09-2013
		US 2015055831 A1	26-02-2015
		WO 2013141226 A1	26-09-2013
US 2013253753 A1	26-09-2013	CN 104203702 A	10-12-2014
		EP 2812222 A2	17-12-2014
		JP 2015514034 A	18-05-2015
		KR 20140138762 A	04-12-2014
		US 2013253753 A1	26-09-2013
		WO 2014003860 A2	03-01-2014
WO 0180068 A1	25-10-2001	AU 5361901 A	30-10-2001
		US 2003040864 A1	27-02-2003
		WO 0180068 A1	25-10-2001

(12) INTERNATIONAL APPLICATION PUBLISHED UNDER THE PATENT COOPERATION TREATY (PCT)

(19) World Intellectual Property Organization
International Bureau

(43) International Publication Date
25 February 2016 (25.02.2016)

WIPO | PCT

(10) International Publication Number
WO 2016/027270 A1

(51) International Patent Classification: *G06K 9/00* (2006.01)

(21) International Application Number: PCT/IL2015/050833

(22) International Filing Date: 17 August 2015 (17.08.2015)

(25) Filing Language: English

(26) Publication Language: English

(30) Priority Data:
62/038,426 18 August 2014 (18.08.2014) US

(71) Applicant: **MOBILEYE VISION TECHNOLOGIES LTD.** [IL/IL]; Hartom 13, 9777513 Jerusalem (IL).

(72) Inventors: **AHARONY, Hila**; 8 Nisan Harpaz St., 9371647 Jerusalem (IL). **DYSHEL, Maria**; 9b/4 Haportzim St., 9366211 Jerusalem (IL). **HAREL, Amir**; 10 Alkalai St., 7630410 Rehovot (IL). **RABANI, Meital**; 8/5 Bracha Zfira St., 9692911 Jerusalem (IL). **SHAMAH, Shaked**; 121 Herzl Blvd., 9622806 Jerusalem (IL). **HORN, Kobi**; 116 Ma'ale Hashita St., 9081500 Beit Zayit (IL).

(74) Agent: **COHN, Ilan**; REINHOLD COHN AND PARTNERS, P.O.Box 13239, 6113102 Tel Aviv (IL).

(81) Designated States *(unless otherwise indicated, for every kind of national protection available)*: AE, AG, AL, AM, AO, AT, AU, AZ, BA, BB, BG, BH, BN, BR, BW, BY, BZ, CA, CH, CL, CN, CO, CR, CU, CZ, DE, DK, DM,

[Continued on next page]

(54) Title: RECOGNITION AND PREDICTION OF LANE CONSTRAINTS AND CONSTRUCTION AREAS IN NAVIGATION

(57) Abstract: Systems and methods use cameras to provide autonomous and/or driver-assist navigation features. In some implementations, techniques for predicting the location of first roadway lane constraints are provided. The system may receive multiple images of a roadway in a vicinity of a vehicle, recognize a first roadway lane constraint, and, when lane prediction conditions are determined to be satisfied, predict a location of a second roadway lane constraint. In some implementations, techniques for detecting and responding to construction zones are provided. The system may receive multiple images of a roadway in a vicinity of a vehicle, recognize indicators of a construction zone in the images, determine that the vehicle is proximate to a construction zone, and output a signal indicating that the vehicle is proximate to a construction zone.

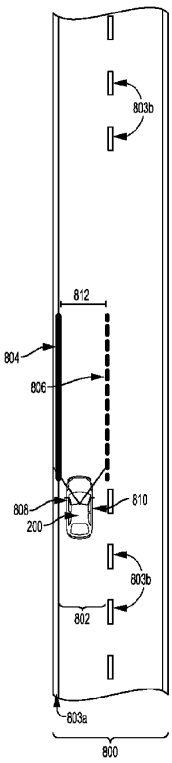

FIG. 8B

WO 2016/027270 A1

DO, DZ, EC, EE, EG, ES, FI, GB, GD, GE, GH, GM, GT, HN, HR, HU, ID, IL, IN, IR, IS, JP, KE, KG, KN, KP, KR, KZ, LA, LC, LK, LR, LS, LU, LY, MA, MD, ME, MG, MK, MN, MW, MX, MY, MZ, NA, NG, NI, NO, NZ, OM, PA, PE, PG, PH, PL, PT, QA, RO, RS, RU, RW, SA, SC, SD, SE, SG, SK, SL, SM, ST, SV, SY, TH, TJ, TM, TN, TR, TT, TZ, UA, UG, US, UZ, VC, VN, ZA, ZM, ZW.

(84) Designated States *(unless otherwise indicated, for every kind of regional protection available)*: ARIPO (BW, GH, GM, KE, LR, LS, MW, MZ, NA, RW, SD, SL, ST, SZ, TZ, UG, ZM, ZW), Eurasian (AM, AZ, BY, KG, KZ, RU, TJ, TM), European (AL, AT, BE, BG, CH, CY, CZ, DE, DK, EE, ES, FI, FR, GB, GR, HR, HU, IE, IS, IT, LT, LU, LV, MC, MK, MT, NL, NO, PL, PT, RO, RS, SE, SI, SK, SM, TR), OAPI (BF, BJ, CF, CG, CI, CM, GA, GN, GQ, GW, KM, ML, MR, NE, SN, TD, TG).

Published:

— *with international search report (Art. 21(3))*

— *before the expiration of the time limit for amending the claims and to be republished in the event of receipt of amendments (Rule 48.2(h))*

RECOGNITION AND PREDICTION OF LANE CONSTRAINTS AND CONSTRUCTION AREAS IN NAVIGATION

Cross Reference to Related Applications

[0001] This application claims the benefit of U.S. Provisional Patent Application No. 62/038,426, the entirety of which is incorporated herein by reference.

Field of the Disclosure

[0002] This disclosure relates generally to autonomous driving and/or driver assist technology and, more specifically, to systems and methods that use cameras to provide autonomous driving and/or driver assist technology features.

Background

[0003] As technology continues to advance, the goal of a fully autonomous vehicle that is capable of navigating on roadways is on the horizon. Primarily, an autonomous vehicle may be able to identify its environment and navigate without input from a human operator. Autonomous vehicles may also take into account a variety of factors and make appropriate decisions based on those factors to safely and accurately reach an intended destination. For example, various objects – such as other vehicles and pedestrians – are encountered when a vehicle typically travels a roadway. Autonomous driving systems may recognize these objects in a vehicle's environment and take appropriate and timely action to avoid collisions. Additionally, autonomous driving systems may identify other indicators – such as traffic signals, traffic signs, and lane markings – that regulate vehicle movement (e.g., when the vehicle must stop and may go, a speed at which the vehicle must not exceed, where the vehicle must be positioned on the roadway, etc.). Autonomous driving systems may need to determine when a vehicle should change lanes, turn at intersections, change roadways, etc. As is evident from these examples, many factors may need to be addressed in order to provide an autonomous vehicle that is capable of navigating safely and accurately.

IPR2025-01035
Tesla EX1002 Page 2631

Summary

[0004] Current autonomous or driver-assist (e.g., partially autonomous) vehicle systems may be unable to adequately identify a lane when lane lines (e.g., the marked lines that divide lanes) or other markings do not clearly indicate the locations of lane constraints on a roadway. For example, current systems may not function properly when a lane constraint cannot be identified from lines or markings detected in received images of a roadway; or, current systems may inaccurately identify a lane constraint where a lane constraint does not in reality exist. Current autonomous or driver-assist vehicle systems may also be unable to adequately identify or respond to construction zones on roadways, where modified vehicle control may be required, and where responding to certain roadway elements in a different manner may be advantageous. The inventors have recognized these and other problems which would be apparent from the present disclosure, which are addressed by the techniques disclosed herein.

[0005] Some embodiments consistent with the present disclosure provide systems and methods for autonomous or driver-assist vehicle navigation. Some disclosed embodiments may use cameras to provide autonomous vehicle navigation features. For example, consistent with some disclosed embodiments, the disclosed systems may include one, two, or more cameras that monitor the environment of a vehicle and cause a navigational response based on an analysis of images captured by one or more of the cameras.

[0006] In accordance with some embodiments, a computer system comprises a memory that stores instructions, and a processor that executes the instructions to cause the system to: receive, from a camera, multiple images of a roadway in a vicinity of a moving vehicle, recognize, based on the multiple images, a first roadway lane constraint, determine, based on the multiple images, that one or more defined lane prediction conditions are satisfied, in accordance with a determination that one or more defined lane prediction conditions are satisfied, predict a location of a second roadway lane constraint, and enable the moving vehicle to avoid the first roadway lane constraint and the second roadway lane constraint.

[0007] In accordance with some embodiments, a computer system comprises a memory that stores instructions and a processor that executes the instructions to cause

the system to: receive, from a camera, multiple images of a roadway in a vicinity of a moving vehicle, recognize, in the multiple images, one or more indicators of a construction zone, determine, based on the one or more indicators, that the vehicle is proximate to a construction zone, and, in accordance with a determination that the vehicle is proximate to a construction zone, output a signal indicating that the vehicle is proximate to a construction zone.

Brief Description of the Drawings

[0008] FIG. 1 is a diagrammatic representation of an exemplary system consistent with the disclosed embodiments.

[0009] FIG. 2A is a diagrammatic side view representation of an exemplary vehicle including a system consistent with the disclosed embodiments.

[0010] FIG. 2B is a diagrammatic top view representation of the vehicle and system shown in FIG. 2A consistent with the disclosed embodiments.

[0011] FIG. 2C is a diagrammatic top view representation of another embodiment of a vehicle including a system consistent with the disclosed embodiments.

[0012] FIG. 2D is a diagrammatic top view representation of yet another embodiment of a vehicle including a system consistent with the disclosed embodiments.

[0013] FIG. 2E is a diagrammatic top view representation of yet another embodiment of a vehicle including a system consistent with the disclosed embodiments.

[0014] FIG. 2F is a diagrammatic representation of exemplary vehicle control systems consistent with the disclosed embodiments.

[0015] FIG. 3A is a diagrammatic representation of an interior of a vehicle including a rearview mirror and a user interface for a vehicle imaging system consistent with the disclosed embodiments.

[0016] FIG. 3B is an illustration of an example of a camera mount that is configured to be positioned behind a rearview mirror and against a vehicle windshield consistent with the disclosed embodiments.

[0017] FIG. 3C is an illustration of the camera mount shown in FIG. 3B from a different perspective consistent with the disclosed embodiments.

[0018] FIG. 3D is an illustration of an example of a camera mount that is configured to be positioned behind a rearview mirror and against a vehicle windshield consistent with the disclosed embodiments.

[0019] FIG. 4 is an exemplary block diagram of a memory configured to store instructions for performing one or more operations consistent with the disclosed embodiments.

[0020] FIG. 5A is a flowchart showing an exemplary process for causing one or more navigational responses based on monocular image analysis consistent with disclosed embodiments.

[0021] FIG. 5B is a flowchart showing an exemplary process for detecting one or more vehicles and/or pedestrians in a set of images consistent with the disclosed embodiments.

[0022] FIG. 5C is a flowchart showing an exemplary process for detecting road marks and/or lane geometry information in a set of images consistent with the disclosed embodiments.

[0023] FIG. 5D is a flowchart showing an exemplary process for detecting traffic lights in a set of images consistent with the disclosed embodiments.

[0024] FIG. 5E is a flowchart showing an exemplary process for causing one or more navigational responses based on a vehicle path consistent with the disclosed embodiments.

[0025] FIG. 5F is a flowchart showing an exemplary process for determining whether a leading vehicle is changing lanes consistent with the disclosed embodiments.

[0026] FIG. 6 is a flowchart showing an exemplary process for causing one or more navigational responses based on stereo image analysis consistent with the disclosed embodiments.

[0027] FIG. 7 is a flowchart showing an exemplary process for causing one or more navigational responses based on an analysis of three sets of images consistent with the disclosed embodiments.

[0028] FIGS. 8A–8C are depictions of a vehicle traveling along a roadway in accordance with some embodiments.

[0029] FIGS. 9A–9C are depictions of a vehicle traveling along a roadway in accordance with some embodiments.

[0030] FIG. 10A is a depiction of a perspective view from a camera associated with a system in accordance with some embodiments.

[0031] FIG. 10B is a depiction of a vehicle traveling along a roadway in accordance with some embodiments.

[0032] FIG. 11 is a diagrammatic representation of the memory of an exemplary system consistent with some disclosed embodiments.

[0033] FIG. 12 is a flowchart of an exemplary process in accordance with some embodiments.

[0034] FIG. 13 is a depiction of a vehicle traveling along a roadway in accordance with some embodiments.

[0035] FIG 14 is a diagrammatic representation of the memory of an exemplary system consistent with some disclosed embodiments.

[0036] FIG. 15 is a flowchart of an exemplary process in accordance with some embodiments.

Detailed Description

[0037] The following detailed description refers to the accompanying drawings. Wherever possible, the same reference numbers are used in the drawings and the following description to refer to the same or similar parts. While several illustrative embodiments are described herein, modifications, adaptations and other implementations are possible. For example, substitutions, additions or modifications

may be made to the components illustrated in the drawings, and the illustrative methods described herein may be modified by substituting, reordering, removing, or adding steps to the disclosed methods. Accordingly, the following detailed description is not limited to the disclosed embodiments and examples.

[0038] Disclosed embodiments provide systems and methods that use cameras to provide autonomous navigation, vehicle control, and/or driver assist technology features. Driver assist technology, as opposed to fully autonomous driving, refers to any suitable technology to assist drivers in the navigation and control of their vehicles, such as LKA (lane keeping assist), LDW (lane departure warning), acceleration of the vehicle, deceleration of the vehicle, steering of the vehicle, controlling vehicle braking, preparing the vehicle for an unavoidable collision, and/or any other suitable manner of controlling any aspect of the operation of the vehicle or assisting the driver in controlling any such aspect. In various embodiments, the system may include one, two or more cameras that monitor the environment of a vehicle. In some embodiments, the system may provide techniques for predicting the location of roadway lane constraints and/or techniques for detecting and responding to construction zones.

[0039] FIG. 1 is a block diagram representation of a system 100 consistent with the exemplary disclosed embodiments. System 100 may include various components depending on the requirements of a particular implementation. In some embodiments, system 100 may include a processing unit 110, an image acquisition unit 120, a position sensor 130, one or more memory units 140, 150, a map database 160, and a user interface 170. Processing unit 110 may include one or more processing devices. In some embodiments, processing unit 110 may include an application processor 180, an image processor 190, or any other suitable processing device. Similarly, image acquisition unit 120 may include any number of image acquisition devices and components depending on the requirements of a particular application. In some embodiments, image acquisition unit 120 may include one or more image capture devices (e.g., cameras), such as image capture device 122, image capture device 124, and image capture device 126. System 100 may also include a data interface 128 communicatively connecting processing unit 110 to image acquisition device 120. For

example, data interface 128 may include any wired and/or wireless link or links for transmitting image data acquired by image accusation device 120 to processing unit 110.

[0040] Both application processor 180 and image processor 190 may include various types of processing devices. For example, either or both of application processor 180 and image processor 190 may include one or more microprocessors, preprocessors (such as image preprocessors), graphics processors, central processing units (CPUs), support circuits, digital signal processors, integrated circuits, memory, or any other types of devices suitable for running applications and for image processing and analysis. In some embodiments, application processor 180 and/or image processor 190 may include any type of single or multi-core processor, mobile device microcontroller, central processing unit, etc. Various processing devices may be used, including, for example, processors available from manufacturers such as Intel®, AMD®, etc. and may include various architectures (e.g., x86 processor, ARM®, etc.).

[0041] In some embodiments, application processor 180 and/or image processor 190 may include any of the EyeQ series of processor chips available from Mobileye®. These processor designs each include multiple processing units with local memory and instruction sets. Such processors may include video inputs for receiving image data from multiple image sensors and may also include video out capabilities. In one example, the EyeQ2® uses 90 nm-micron technology operating at 332 Mhz. The EyeQ2® architecture has two floating point, hyper-thread 32-bit RISC CPUs (MIPS32® 34K® cores), five Vision Computing Engines (VCE), three Vector Microcode Processors (VMP®), Denali 64-bit Mobile DDR Controller, 128-bit internal Sonics Interconnect, dual 16-bit Video input and 18-bit Video output controllers, 16 channels DMA and several peripherals. The MIPS34K CPU manages the five VCEs, three VMP.TM. and the DMA, the second MIPS34K CPU and the multi-channel DMA as well as the other peripherals. The five VCEs, three VMP® and the MIPS34K CPU can perform intensive vision computations required by multi-function bundle applications. In another example, the EyeQ3®, which is a third generation processor and is six times more powerful that the EyeQ2®, may be used in the disclosed embodiments.

[0042] While FIG. 1 depicts two separate processing devices included in processing unit 110, more or fewer processing devices may be used. For example, in some embodiments, a single processing device may be used to accomplish the tasks of application processor 180 and image processor 190. In other embodiments, these tasks may be performed by more than two processing devices.

[0043] Processing unit 110 may comprise various types of devices. For example, processing unit 110 may include various devices, such as a controller, an image preprocessor, a central processing unit (CPU), support circuits, digital signal processors, integrated circuits, memory, or any other types of devices for image processing and analysis. The image preprocessor may include a video processor for capturing, digitizing and processing the imagery from the image sensors. The CPU may comprise any number of microcontrollers or microprocessors. The support circuits may be any number of circuits generally well known in the art, including cache, power supply, clock and input-output circuits. The memory may store software that, when executed by the processor, controls the operation of the system. The memory may include databases and image processing software. The memory may comprise any number of random access memories, read only memories, flash memories, disk drives, optical storage, tape storage, removable storage and other types of storage. In one instance, the memory may be separate from the processing unit 110. In another instance, the memory may be integrated into the processing unit 110.

[0044] Each memory 140, 150 may include software instructions that when executed by a processor (e.g., application processor 180 and/or image processor 190), may control operation of various aspects of system 100. These memory units may include various databases and image processing software. The memory units may include random access memory, read only memory, flash memory, disk drives, optical storage, tape storage, removable storage and/or any other types of storage. In some embodiments, memory units 140, 150 may be separate from the application processor 180 and/or image processor 190. In other embodiments, these memory units may be integrated into application processor 180 and/or image processor 190.

[0045] Position sensor 130 may include any type of device suitable for determining a location associated with at least one component of system 100. In some embodiments, position sensor 130 may include a GPS receiver. Such receivers can determine a user position and velocity by processing signals broadcasted by global positioning system satellites. Position information from position sensor 130 may be made available to application processor 180 and/or image processor 190.

[0046] User interface 170 may include any device suitable for providing information to or for receiving inputs from one or more users of system 100. In some embodiments, user interface 170 may include user input devices, including, for example, a touchscreen, microphone, keyboard, pointer devices, track wheels, cameras, knobs, buttons, etc. With such input devices, a user may be able to provide information inputs or commands to system 100 by typing instructions or information, providing voice commands, selecting menu options on a screen using buttons, pointers, or eye-tracking capabilities, or through any other suitable techniques for communicating information to system 100.

[0047] User interface 170 may be equipped with one or more processing devices configured to provide and receive information to or from a user and process that information for use by, for example, application processor 180. In some embodiments, such processing devices may execute instructions for recognizing and tracking eye movements, receiving and interpreting voice commands, recognizing and interpreting touches and/or gestures made on a touchscreen, responding to keyboard entries or menu selections, etc. In some embodiments, user interface 170 may include a display, speaker, tactile device, and/or any other devices for providing output information to a user.

[0048] Map database 160 may include any type of database for storing map data useful to system 100. In some embodiments, map database 160 may include data relating to the position, in a reference coordinate system, of various items, including roads, water features, geographic features, businesses, points of interest, restaurants, gas stations, etc. Map database 160 may store not only the locations of such items, but also descriptors relating to those items, including, for example, names associated with

any of the stored features. In some embodiments, map database 160 may be physically located with other components of system 100. Alternatively or additionally, map database 160 or a portion thereof may be located remotely with respect to other components of system 100 (e.g., processing unit 110). In such embodiments, information from map database 160 may be downloaded over a wired or wireless data connection to a network (e.g., over a cellular network and/or the Internet, etc.).

[0049] Image capture devices 122, 124, and 126 may each include any type of device suitable for capturing at least one image from an environment. Moreover, any number of image capture devices may be used to acquire images for input to the image processor. Some embodiments may include only a single image capture device, while other embodiments may include two, three, or even four or more image capture devices. Image capture devices 122, 124, and 126 will be further described with reference to FIGS. 2B-2E, below.

[0050] System 100, or various components thereof, may be incorporated into various different platforms. In some embodiments, system 100 may be included on a vehicle 200, as shown in FIG. 2A. For example, vehicle 200 may be equipped with a processing unit 110 and any of the other components of system 100, as described above relative to FIG. 1. While in some embodiments vehicle 200 may be equipped with only a single image capture device (e.g., camera), in other embodiments, such as those discussed in connection with FIGS. 2B-2E, multiple image capture devices may be used. For example, either of image capture devices 122 and 124 of vehicle 200, as shown in FIG. 2A, may be part of an ADAS (Advanced Driver Assistance Systems) imaging set.

[0051] The image capture devices included on vehicle 200 as part of the image acquisition unit 120 may be positioned at any suitable location. In some embodiments, as shown in FIGS. 2A-2E and 3A-3C, image capture device 122 may be located in the vicinity of the rearview mirror. This position may provide a line of sight similar to that of the driver of vehicle 200, which may aid in determining what is and is not visible to the driver. Image capture device 122 may be positioned at any location near the rearview mirror, but placing image capture device 122 on the driver side of the mirror may further aid in obtaining images representative of the driver's field of view and/or line of sight.

[0052] Other locations for the image capture devices of image acquisition unit 120 may also be used. For example, image capture device 124 may be located on or in a bumper of vehicle 200. Such a location may be especially suitable for image capture devices having a wide field of view. The line of sight of bumper-located image capture devices can be different from that of the driver and, therefore, the bumper image capture device and driver may not always see the same objects. The image capture devices (e.g., image capture devices 122, 124, and 126) may also be located in other locations. For example, the image capture devices may be located on or in one or both of the side mirrors of vehicle 200, on the roof of vehicle 200, on the hood of vehicle 200, on the trunk of vehicle 200, on the sides of vehicle 200, mounted on, positioned behind, or positioned in front of any of the windows of vehicle 200, and mounted in or near light figures on the front and/or back of vehicle 200, etc.

[0053] In addition to image capture devices, vehicle 200 may include various other components of system 100. For example, processing unit 110 may be included on vehicle 200 either integrated with or separate from an engine control unit (ECU) of the vehicle. Vehicle 200 may also be equipped with a position sensor 130, such as a GPS receiver and may also include a map database 160 and memory units 140 and 150.

[0054] FIG. 2A is a diagrammatic side view representation of an exemplary vehicle imaging system consistent with the disclosed embodiments. FIG. 2B is a diagrammatic top view illustration of the embodiment shown in FIG. 2A. As illustrated in FIG. 2B, the disclosed embodiments may include a vehicle 200 including in its body a system 100 with a first image capture device 122 positioned in the vicinity of the rearview mirror and/or near the driver of vehicle 200, a second image capture device 124 positioned on or in a bumper region (e.g., one of bumper regions 210) of vehicle 200, and a processing unit 110.

[0055] As illustrated in FIG. 2C, image capture devices 122 and 124 may both be positioned in the vicinity of the rearview mirror and/or near the driver of vehicle 200. Additionally, while two image capture devices 122 and 124 are shown in FIGS. 2B and 2C, it should be understood that other embodiments may include more than two image capture devices. For example, in the embodiments shown in FIGS. 2D and 2E, first,

second, and third image capture devices 122, 124, and 126, are included in the system 100 of vehicle 200.

[0056] As illustrated in FIG. 2D, image capture device 122 may be positioned in the vicinity of the rearview mirror and/or near the driver of vehicle 200, and image capture devices 124 and 126 may be positioned on or in a bumper region (e.g., one of bumper regions 210) of vehicle 200. And as shown in FIG. 2E, image capture devices 122, 124, and 126 may be positioned in the vicinity of the rearview mirror and/or near the driver seat of vehicle 200. The disclosed embodiments are not limited to any particular number and configuration of the image capture devices, and the image capture devices may be positioned in any appropriate location within and/or on vehicle 200.

[0057] It is to be understood that the disclosed embodiments are not limited to vehicles and could be applied in other contexts. It is also to be understood that disclosed embodiments are not limited to a particular type of vehicle 200 and may be applicable to all types of vehicles including automobiles, trucks, trailers, motorcycles, bicycles, self-balancing transport devices and other types of vehicles.

[0058] The first image capture device 122 may include any suitable type of image capture device. Image capture device 122 may include an optical axis. In one instance, the image capture device 122 may include an Aptina M9V024 WVGA sensor with a global shutter. In other embodiments, image capture device 122 may provide a resolution of 1280x960 pixels and may include a rolling shutter. Image capture device 122 may include various optical elements. In some embodiments one or more lenses may be included, for example, to provide a desired focal length and field of view for the image capture device. In some embodiments, image capture device 122 may be associated with a 6 mm lens or a 12 mm lens. In some embodiments, image capture device 122 may be configured to capture images having a desired field-of-view (FOV) 202, as illustrated in FIG. 2D. For example, image capture device 122 may be configured to have a regular FOV, such as within a range of 40 degrees to 56 degrees, including a 46 degree FOV, 50 degree FOV, 52 degree FOV, or greater. Alternatively, image capture device 122 may be configured to have a narrow FOV in the range of 23 to 40 degrees, such as a 28 degree FOV or 36 degree FOV. In addition, image capture

device 122 may be configured to have a wide FOV in the range of 100 to 180 degrees. In some embodiments, image capture device 122 may include a wide angle bumper camera or one with up to a 180 degree FOV.

[0059] The first image capture device 122 may acquire a plurality of first images relative to a scene associated with the vehicle 200. Each of the plurality of first images may be acquired as a series of image scan lines, which may be captured using a rolling shutter. Each scan line may include a plurality of pixels.

[0060] The first image capture device 122 may have a scan rate associated with acquisition of each of the first series of image scan lines. The scan rate may refer to a rate at which an image sensor can acquire image data associated with each pixel included in a particular scan line.

[0061] Image capture devices 122, 124, and 126 may contain any suitable type and number of image sensors, including CCD sensors or CMOS sensors, for example. In one embodiment, a CMOS image sensor may be employed along with a rolling shutter, such that each pixel in a row is read one at a time, and scanning of the rows proceeds on a row-by-row basis until an entire image frame has been captured. In some embodiments, the rows may be captured sequentially from top to bottom relative to the frame.

[0062] The use of a rolling shutter may result in pixels in different rows being exposed and captured at different times, which may cause skew and other image artifacts in the captured image frame. On the other hand, when the image capture device 122 is configured to operate with a global or synchronous shutter, all of the pixels may be exposed for the same amount of time and during a common exposure period. As a result, the image data in a frame collected from a system employing a global shutter represents a snapshot of the entire FOV (such as FOV 202) at a particular time. In contrast, in a rolling shutter application, each row in a frame is exposed and data is capture at different times. Thus, moving objects may appear distorted in an image capture device having a rolling shutter. This phenomenon will be described in greater detail below.

[0063] The second image capture device 124 and the third image capturing device 126 may be any type of image capture device. Like the first image capture device 122, each of image capture devices 124 and 126 may include an optical axis. In one embodiment, each of image capture devices 124 and 126 may include an Aptina M9V024 WVGA sensor with a global shutter. Alternatively, each of image capture devices 124 and 126 may include a rolling shutter. Like image capture device 122, image capture devices 124 and 126 may be configured to include various lenses and optical elements. In some embodiments, lenses associated with image capture devices 124 and 126 may provide FOVs (such as FOVs 204 and 206) that are the same as, or different than (e.g., narrower than), a FOV (such as FOV 202) associated with image capture device 122. For example, image capture devices 124 and 126 may have FOVs of 40 degrees, 30 degrees, 26 degrees, 23 degrees, 20 degrees, or less.

[0064] Image capture devices 124 and 126 may acquire a plurality of second and third images relative to a scene associated with the vehicle 200. Each of the plurality of second and third images may be acquired as a second and third series of image scan lines, which may be captured using a rolling shutter. Each scan line or row may have a plurality of pixels. Image capture devices 124 and 126 may have second and third scan rates associated with acquisition of each of image scan lines included in the second and third series.

[0065] Each image capture device 122, 124, and 126 may be positioned at any suitable position and orientation relative to vehicle 200. The relative positioning of the image capture devices 122, 124, and 126 may be selected to aid in fusing together the information acquired from the image capture devices. For example, in some embodiments, a FOV (such as FOV 204) associated with image capture device 124 may overlap partially or fully with a FOV (such as FOV 202) associated with image capture device 122 and a FOV (such as FOV 206) associated with image capture device 126.

[0066] Image capture devices 122, 124, and 126 may be located on vehicle 200 at any suitable relative heights. In one instance, there may be a height difference between the image capture devices 122, 124, and 126, which may provide sufficient parallax

information to enable stereo analysis. For example, as shown in FIG. 2A, the two image capture devices 122 and 124 are at different heights. There may also be a lateral displacement difference between image capture devices 122, 124, and 126, giving additional parallax information for stereo analysis by processing unit 110, for example. The difference in the lateral displacement may be denoted by d_x, as shown in FIGS. 2C and 2D. In some embodiments, fore or aft displacement (e.g., range displacement) may exist between image capture devices 122, 124, and 126. For example, image capture device 122 may be located 0.5 to 2 meters or more behind image capture device 124 and/or image capture device 126. This type of displacement may enable one of the image capture devices to cover potential blind spots of the other image capture device(s).

[0067] Image capture devices 122 may have any suitable resolution capability (e.g., number of pixels associated with the image sensor), and the resolution of the image sensor(s) associated with the image capture device 122 may be higher, lower, or the same as the resolution of the image sensor(s) associated with image capture devices 124 and 126. In some embodiments, the image sensor(s) associated with image capture device 122 and/or image capture devices 124 and 126 may have a resolution of 640x480, 1024x768, 1280x960, or any other suitable resolution.

[0068] The frame rate (e.g., the rate at which an image capture device acquires a set of pixel data of one image frame before moving on to capture pixel data associated with the next image frame) may be controllable. The frame rate associated with image capture device 122 may be higher, lower, or the same as the frame rate associated with image capture devices 124 and 126. The frame rate associated with image capture devices 122, 124, and 126 may depend on a variety of factors that may affect the timing of the frame rate. For example, one or more of image capture devices 122, 124, and 126 may include a selectable pixel delay period imposed before or after acquisition of image data associated with one or more pixels of an image sensor in image capture device 122, 124, and/or 126. Generally, image data corresponding to each pixel may be acquired according to a clock rate for the device (e.g., one pixel per clock cycle). Additionally, in embodiments including a rolling shutter, one or more of image capture

devices 122, 124, and 126 may include a selectable horizontal blanking period imposed before or after acquisition of image data associated with a row of pixels of an image sensor in image capture device 122, 124, and/or 126. Further, one or more of image capture devices 122, 124, and/or 126 may include a selectable vertical blanking period imposed before or after acquisition of image data associated with an image frame of image capture device 122, 124, and 126.

[0069] These timing controls may enable synchronization of frame rates associated with image capture devices 122, 124, and 126, even where the line scan rates of each are different. Additionally, as will be discussed in greater detail below, these selectable timing controls, among other factors (e.g., image sensor resolution, maximum line scan rates, etc.) may enable synchronization of image capture from an area where the FOV of image capture device 122 overlaps with one or more FOVs of image capture devices 124 and 126, even where the field of view of image capture device 122 is different from the FOVs of image capture devices 124 and 126.

[0070] Frame rate timing in image capture device 122, 124, and 126 may depend on the resolution of the associated image sensors. For example, assuming similar line scan rates for both devices, if one device includes an image sensor having a resolution of 640x480 and another device includes an image sensor with a resolution of 1280x960, then more time will be required to acquire a frame of image data from the sensor having the higher resolution.

[0071] Another factor that may affect the timing of image data acquisition in image capture devices 122, 124, and 126 is the maximum line scan rate. For example, acquisition of a row of image data from an image sensor included in image capture device 122, 124, and 126 will require some minimum amount of time. Assuming no pixel delay periods are added, this minimum amount of time for acquisition of a row of image data will be related to the maximum line scan rate for a particular device. Devices that offer higher maximum line scan rates have the potential to provide higher frame rates than devices with lower maximum line scan rates. In some embodiments, one or more of image capture devices 124 and 126 may have a maximum line scan rate that is higher than a maximum line scan rate associated with image capture device 122. In

some embodiments, the maximum line scan rate of image capture device 124 and/or 126 may be 1.25, 1.5, 1.75, or 2 times or more than a maximum line scan rate of image capture device 122.

[0072] In another embodiment, image capture devices 122, 124, and 126 may have the same maximum line scan rate, but image capture device 122 may be operated at a scan rate less than or equal to its maximum scan rate. The system may be configured such that one or more of image capture devices 124 and 126 operate at a line scan rate that is equal to the line scan rate of image capture device 122. In other instances, the system may be configured such that the line scan rate of image capture device 124 and/or image capture device 126 may be 1.25, 1.5, 1.75, or 2 times or more than the line scan rate of image capture device 122.

[0073] In some embodiments, image capture devices 122, 124, and 126 may be asymmetric. That is, they may include cameras having different fields of view (FOV) and focal lengths. The fields of view of image capture devices 122, 124, and 126 may include any desired area relative to an environment of vehicle 200, for example. In some embodiments, one or more of image capture devices 122, 124, and 126 may be configured to acquire image data from an environment in front of vehicle 200, behind vehicle 200, to the sides of vehicle 200, or combinations thereof.

[0074] Further, the focal length associated with each image capture device 122, 124, and/or 126 may be selectable (e.g., by inclusion of appropriate lenses etc.) such that each device acquires images of objects at a desired distance range relative to vehicle 200. For example, in some embodiments image capture devices 122, 124, and 126 may acquire images of close-up objects within a few meters from the vehicle. Image capture devices 122, 124, and 126 may also be configured to acquire images of objects at ranges more distant from the vehicle (e.g., 25 m, 50 m, 100 m, 150 m, or more). Further, the focal lengths of image capture devices 122, 124, and 126 may be selected such that one image capture device (e.g., image capture device 122) can acquire images of objects relatively close to the vehicle (e.g., within 10 m or within 20 m) while the other image capture devices (e.g., image capture devices 124 and 126) can acquire

images of more distant objects (e.g., greater than 20 m, 50 m, 100 m, 150 m, etc.) from vehicle 200.

[0075] According to some embodiments, the FOV of one or more image capture devices 122, 124, and 126 may have a wide angle. For example, it may be advantageous to have a FOV of 140 degrees, especially for image capture devices 122, 124, and 126 that may be used to capture images of the area in the vicinity of vehicle 200. For example, image capture device 122 may be used to capture images of the area to the right or left of vehicle 200 and, in such embodiments, it may be desirable for image capture device 122 to have a wide FOV (e.g., at least 140 degrees).

[0076] In some embodiments, a system may define the "vicinity" of the vehicle according to predefined constraints or dynamically determined constraints. The vicinity of the vehicle may, for example, be considered any area within a certain distance of the vehicle in any one or more directions, such as 1 meter, 5 meters, 10 meters, 25 meters, 50 meters, 100 meters, 250 meters, 500 meters, or 1000 meters. In some embodiments, the area defined as the vicinity of the vehicle may be irregularly shaped, such that it extends for different distances in different directions; the vicinity in the forward direction as defined by the vehicle's travel may, for example, extend for several hundred meters, while the vicinity in the backward or sideways directions may only extend, for example, for several dozen meters or less. The defined vicinity of the vehicle may, in some embodiments, be varied dynamically according to the information captured by the one or more image capture devices, such that the vicinity may vary according to, for example, what parts of a roadway are visible in the FOV of the image capture devices. The vicinity of the vehicle may, in some embodiments, be dynamically varied according to, for example, any perceptible condition or state of the roadway or vehicle, including vehicle speed, posted speed limit, roadway conditions, roadway congestion, roadway size, visibility distance, environment brightness, time of day, presence of other vehicles, presence of pedestrians, or any other suitable factor.

[0077] The field of view associated with each of image capture devices 122, 124, and 126 may depend on the respective focal lengths. For example, as the focal length increases, the corresponding field of view decreases.

[0078] Image capture devices 122, 124, and 126 may be configured to have any suitable fields of view. In one particular example, image capture device 122 may have a horizontal FOV of 46 degrees, image capture device 124 may have a horizontal FOV of 23 degrees, and image capture device 126 may have a horizontal FOV in between 23 and 46 degrees. In another instance, image capture device 122 may have a horizontal FOV of 52 degrees, image capture device 124 may have a horizontal FOV of 26 degrees, and image capture device 126 may have a horizontal FOV in between 26 and 52 degrees. In some embodiments, a ratio of the FOV of image capture device 122 to the FOVs of image capture device 124 and/or image capture device 126 may vary from 1.5 to 2.0. In other embodiments, this ratio may vary between 1.25 and 2.25.

[0079] System 100 may be configured so that a field of view of image capture device 122 overlaps, at least partially or fully, with a field of view of image capture device 124 and/or image capture device 126. In some embodiments, system 100 may be configured such that the fields of view of image capture devices 124 and 126, for example, fall within (e.g., are narrower than) and share a common center with the field of view of image capture device 122. In other embodiments, the image capture devices 122, 124, and 126 may capture adjacent FOVs or may have partial overlap in their FOVs. In some embodiments, the fields of view of image capture devices 122, 124, and 126 may be aligned such that a center of the narrower FOV image capture devices 124 and/or 126 may be located in a lower half of the field of view of the wider FOV device 122.

[0080] FIG. 2F is a diagrammatic representation of exemplary vehicle control systems, consistent with the disclosed embodiments. As indicated in FIG. 2F, vehicle 200 may include throttling system 220, braking system 230, and steering system 240. System 100 may provide inputs (e.g., control signals) to one or more of throttling system 220, braking system 230, and steering system 240 over one or more data links (e.g., any wired and/or wireless link or links for transmitting data). For example, based on analysis of images acquired by image capture devices 122, 124, and/or 126, system 100 may provide control signals to one or more of throttling system 220, braking system 230, and steering system 240 to navigate vehicle 200 (e.g., by causing an acceleration,

a turn, a lane shift, etc.). Further, system 100 may receive inputs from one or more of throttling system 220, braking system 230, and steering system 240 indicating operating conditions of vehicle 200 (e.g., speed, whether vehicle 200 is braking and/or turning, etc.). Further details are provided in connection with FIGS. 4-7, below.

[0081] As shown in FIG. 3A, vehicle 200 may also include a user interface 170 for interacting with a driver or a passenger of vehicle 200. For example, user interface 170 in a vehicle application may include a touch screen 320, knobs 330, buttons 340, and a microphone 350. A driver or passenger of vehicle 200 may also use handles (e.g., located on or near the steering column of vehicle 200 including, for example, turn signal handles), buttons (e.g., located on the steering wheel of vehicle 200), and the like, to interact with system 100. In some embodiments, microphone 350 may be positioned adjacent to a rearview mirror 310. Similarly, in some embodiments, image capture device 122 may be located near rearview mirror 310. In some embodiments, user interface 170 may also include one or more speakers 360 (e.g., speakers of a vehicle audio system). For example, system 100 may provide various notifications (e.g., alerts) via speakers 360.

[0082] FIGS. 3B-3D are illustrations of an exemplary camera mount 370 configured to be positioned behind a rearview mirror (e.g., rearview mirror 310) and against a vehicle windshield, consistent with disclosed embodiments. As shown in FIG. 3B, camera mount 370 may include image capture devices 122, 124, and 126. Image capture devices 124 and 126 may be positioned behind a glare shield 380, which may be flush against the vehicle windshield and include a composition of film and/or anti-reflective materials. For example, glare shield 380 may be positioned such that it aligns against a vehicle windshield having a matching slope. In some embodiments, each of image capture devices 122, 124, and 126 may be positioned behind glare shield 380, as depicted, for example, in FIG. 3D. The disclosed embodiments are not limited to any particular configuration of image capture devices 122, 124, and 126, camera mount 370, and glare shield 380. FIG. 3C is an illustration of camera mount 370 shown in FIG. 3B from a front perspective.

[0083] As will be appreciated by a person skilled in the art having the benefit of this disclosure, numerous variations and/or modifications may be made to the foregoing disclosed embodiments. For example, not all components are essential for the operation of system 100. Further, any component may be located in any appropriate part of system 100 and the components may be rearranged into a variety of configurations while providing the functionality of the disclosed embodiments. Therefore, the foregoing configurations are examples and, regardless of the configurations discussed above, system 100 can provide a wide range of functionality to analyze the surroundings of vehicle 200 and, in response to this analysis, navigate and/or otherwise control and/or operate vehicle 200. Navigation, control, and/or operation of vehicle 200 may include enabling and/or disabling (directly or via intermediary controllers, such as the controllers mentioned above) various features, components, devices, modes, systems, and/or subsystems associated with vehicle 200. Navigation, control, and/or operation may alternately or additionally include interaction with a user, driver, passenger, passerby, and/or other vehicle or user, which may be located inside or outside vehicle 200, for example by providing visual, audio, haptic, and/or other sensory alerts and/or indications.

[0084] As discussed below in further detail and consistent with various disclosed embodiments, system 100 may provide a variety of features related to autonomous driving and/or driver assist technology. For example, system 100 may analyze image data, position data (e.g., GPS location information), map data, speed data, and/or data from sensors included in vehicle 200. System 100 may collect the data for analysis from, for example, image acquisition unit 120, position sensor 130, and other sensors. Further, system 100 may analyze the collected data to determine whether or not vehicle 200 should take a certain action, and then automatically take the determined action without human intervention. For example, when vehicle 200 navigates without human intervention, system 100 may automatically control the braking, acceleration, and/or steering of vehicle 200 (e.g., by sending control signals to one or more of throttling system 220, braking system 230, and steering system 240). Further, system 100 may analyze the collected data and issue warnings, indications, recommendations, alerts, or

instructions to a driver, passenger, user, or other person inside or outside of the vehicle (or to other vehicles) based on the analysis of the collected data.

[0085] Further, consistent with disclosed embodiments, the functionality provided by system 100 may cause vehicle 200 to take different actions to navigate vehicle 200 within a lane and/or relative to other vehicles and/or objects. For example, system 100 may adjust the positioning of vehicle 200 relative to a lane within which vehicle 200 is traveling and/or relative to objects positioned near vehicle 200, select a particular lane for vehicle 200 to use while traveling, and take action in response to an encroaching vehicle, such as a vehicle attempting to move into the lane within which vehicle 200 is traveling. Additionally, system 100 may control the speed of vehicle 200 in different scenarios, such as when vehicle 200 is making a turn. System 100 may cause vehicle 200 to mimic the actions of a leading vehicle or monitor a target vehicle and navigate vehicle 200 so that it passes the target vehicle. Additional details regarding the various embodiments that are provided by system 100 are provided below.

[0086] Forward-Facing Multi-Imaging System

[0087] As discussed above, system 100 may provide drive assist functionality that uses a multi-camera system. The multi-camera system may use one or more cameras facing in the forward direction of a vehicle. In other embodiments, the multi-camera system may include one or more cameras facing to the side of a vehicle or to the rear of the vehicle. In one embodiment, for example, system 100 may use a two-camera imaging system, where a first camera and a second camera (e.g., image capture devices 122 and 124) may be positioned at the front and/or the sides of a vehicle (e.g., vehicle 200). The first camera may have a field of view that is greater than, less than, or partially overlapping with, the field of view of the second camera. In addition, the first camera may be connected to a first image processor to perform monocular image analysis of images provided by the first camera, and the second camera may be connected to a second image processor to perform monocular image analysis of images provided by the second camera. The outputs (e.g., processed information) of the first and second image processors may be combined. In some embodiments, the second image processor may receive images from both the first camera and second

camera to perform stereo analysis. In another embodiment, system 100 may use a three-camera imaging system where each of the cameras has a different field of view. Such a system may, therefore, make decisions based on information derived from objects located at varying distances both forward and to the sides of the vehicle. References to monocular image analysis may refer to instances where image analysis is performed based on images captured from a single point of view (e.g., from a single camera). Stereo image analysis may refer to instances where image analysis is performed based on two or more images captured with one or more variations of an image capture parameter. For example, captured images suitable for performing stereo image analysis may include images captured: from two or more different positions, from different fields of view, using different focal lengths, along with parallax information, etc.

[0088] For example, in one embodiment, system 100 may implement a three camera configuration using image capture devices 122-126. In such a configuration, image capture device 122 may provide a narrow field of view (e.g., 34 degrees, or other values selected from a range of about 20 to 45 degrees, etc.), image capture device 124 may provide a wide field of view (e.g., 150 degrees or other values selected from a range of about 100 to about 180 degrees), and image capture device 126 may provide an intermediate field of view (e.g., 46 degrees or other values selected from a range of about 35 to about 60 degrees). In some embodiments, image capture device 126 may act as a main or primary camera. Image capture devices 122-126 may be positioned behind rearview mirror 310 and positioned substantially side-by-side (e.g., 6 cm apart). Further, in some embodiments, as discussed above, one or more of image capture devices 122-126 may be mounted behind glare shield 380 that is flush with the windshield of vehicle 200. Such shielding may act to minimize the impact of any reflections from inside the car on image capture devices 122-126.

[0089] In another embodiment, as discussed above in connection with FIGS. 3B and 3C, the wide field of view camera (e.g., image capture device 124 in the above example) may be mounted lower than the narrow and main field of view cameras (e.g., image devices 122 and 126 in the above example). This configuration may provide a free line of sight from the wide field of view camera. To reduce reflections, the cameras

may be mounted close to the windshield of vehicle 200, and may include polarizers on the cameras to damp reflected light.

[0090] A three camera system may provide certain performance characteristics. For example, some embodiments may include an ability to validate the detection of objects by one camera based on detection results from another camera. In the three camera configuration discussed above, processing unit 110 may include, for example, three processing devices (e.g., three EyeQ series of processor chips, as discussed above), with each processing device dedicated to processing images captured by one or more of image capture devices 122-126.

[0091] In a three camera system, a first processing device may receive images from both the main camera and the narrow field of view camera, and perform vision processing of the narrow FOV camera to, for example, detect other vehicles, pedestrians, lane marks, traffic signs, traffic lights, and other road objects. Further, the first processing device may calculate a disparity of pixels between the images from the main camera and the narrow camera and create a 3D reconstruction of the environment of vehicle 200. The first processing device may then combine the 3D reconstruction with 3D map data (e.g., a depth map) or with 3D information calculated based on information from another camera.

[0092] The second processing device may receive images from main camera and perform vision processing to detect other vehicles, pedestrians, lane marks, traffic signs, traffic lights, and other road objects. Additionally, the second processing device may calculate a camera displacement and, based on the displacement, calculate a disparity of pixels between successive images and create a 3D reconstruction of the scene (e.g., a structure from motion). The second processing device may send the structure from motion based 3D reconstruction to the first processing device to be combined with the stereo 3D images or with the depth information obtained by stereo processing.

[0093] The third processing device may receive images from the wide FOV camera and process the images to detect vehicles, pedestrians, lane marks, traffic signs, traffic lights, and other road objects. The third processing device may execute additional

processing instructions to analyze images to identify objects moving in the image, such as vehicles changing lanes, pedestrians, etc.

[0094] In some embodiments, having streams of image-based information captured and processed independently may provide an opportunity for providing redundancy in the system. Such redundancy may include, for example, using a first image capture device and the images processed from that device to validate and/or supplement information obtained by capturing and processing image information from at least a second image capture device.

[0095] In some embodiments, system 100 may use two image capture devices (e.g., image capture devices 122 and 124) in providing navigation assistance for vehicle 200 and use a third image capture device (e.g., image capture device 126) to provide redundancy and validate the analysis of data received from the other two image capture devices. For example, in such a configuration, image capture devices 122 and 124 may provide images for stereo analysis by system 100 for navigating vehicle 200, while image capture device 126 may provide images for monocular analysis by system 100 to provide redundancy and validation of information obtained based on images captured from image capture device 122 and/or image capture device 124. That is, image capture device 126 (and a corresponding processing device) may be considered to provide a redundant sub-system for providing a check on the analysis derived from image capture devices 122 and 124 (e.g., to provide an automatic emergency braking (AEB) system).

[0096] One of skill in the art will recognize that the above camera configurations, camera placements, number of cameras, camera locations, etc., are examples only. These components and others described relative to the overall system may be assembled and used in a variety of different configurations without departing from the scope of the disclosed embodiments. Further details regarding usage of a multi-camera system to provide driver assist and/or autonomous vehicle functionality follow below.

[0097] FIG. 4 is an exemplary functional block diagram of memory 140 and/or 150, which may be stored/programmed with instructions for performing one or more operations consistent with the disclosed embodiments. Although the following refers to

memory 140, one of skill in the art will recognize that instructions may be stored in memory 140 and/or 150.

[0098] As shown in FIG. 4, memory 140 may store a monocular image analysis module 402, a stereo image analysis module 404, a velocity and acceleration module 406, and a navigational response module 408. The disclosed embodiments are not limited to any particular configuration of memory 140. Further, application processor 180 and/or image processor 190 may execute the instructions stored in any of modules 402-408 included in memory 140. One of skill in the art will understand that references in the following discussions to processing unit 110 may refer to application processor 180 and image processor 190 individually or collectively. Accordingly, steps of any of the following processes may be performed by one or more processing devices.

[0099] In one embodiment, monocular image analysis module 402 may store instructions (such as computer vision software) which, when executed by processing unit 110, performs monocular image analysis of a set of images acquired by one of image capture devices 122, 124, and 126. In some embodiments, processing unit 110 may combine information from a set of images with additional sensory information (e.g., information from radar) to perform the monocular image analysis. As described in connection with FIGS. 5A-5D below, monocular image analysis module 402 may include instructions for detecting a set of features within the set of images, such as lane markings, vehicles, pedestrians, road signs, highway exit ramps, traffic lights, hazardous objects, and any other feature associated with an environment of a vehicle. In some embodiments, an environment of a vehicle may include, for any given frame, the area or space covered by any one or by any combination of the imaging devices (the FOV of the imaging devices). Based on the analysis, system 100 (e.g., via processing unit 110) may cause one or more navigational responses in vehicle 200, such as a turn, a lane shift, a change in acceleration, and the like, as discussed below in connection with navigational response module 408. Furthermore, based on the analysis, system 100 (e.g., via processing unit 110) may cause one or more navigational and/or vehicle control responses, including but not limited to the various manners of controlling vehicle 200 and any associated systems and/or subsystems

discussed above. In some embodiments, any or all of the responses or actions mentioned above may be referred to, for simplicity, as a navigational action or a navigational response.

[00100] In one embodiment, stereo image analysis module 404 may store instructions (such as computer vision software) which, when executed by processing unit 110, performs stereo image analysis of first and second sets of images acquired by a combination of image capture devices selected from any of image capture devices 122, 124, and 126. In some embodiments, processing unit 110 may combine information from the first and second sets of images with additional sensory information (e.g., information from radar) to perform the stereo image analysis. For example, stereo image analysis module 404 may include instructions for performing stereo image analysis based on a first set of images acquired by image capture device 124 and a second set of images acquired by image capture device 126. As described in connection with FIG. 6 below, stereo image analysis module 404 may include instructions for detecting a set of features within the first and second sets of images, such as lane markings, vehicles, pedestrians, road signs, highway exit ramps, traffic lights, hazardous objects, and the like. Based on the analysis, processing unit 110 may cause one or more navigational responses in vehicle 200, such as a turn, a lane shift, a change in acceleration, and the like, as discussed below in connection with navigational response module 408.

[00101] In one embodiment, velocity and acceleration module 406 may store software configured to analyze data received from one or more computing and electromechanical devices in vehicle 200 that are configured to cause a change in velocity and/or acceleration of vehicle 200. For example, processing unit 110 may execute instructions associated with velocity and acceleration module 406 to calculate a target speed for vehicle 200 based on data derived from execution of monocular image analysis module 402 and/or stereo image analysis module 404. Such data may include, for example, a target position, velocity, and/or acceleration, the position and/or speed of vehicle 200 relative to a nearby vehicle, pedestrian, or road object, position information for vehicle 200 relative to lane markings of the road, and the like. In addition, processing unit 110

may calculate a target speed for vehicle 200 based on sensory input (e.g., information from radar) and input from other systems of vehicle 200, such as throttling system 220, braking system 230, and/or steering system 240 of vehicle 200. Based on the calculated target speed, processing unit 110 may transmit electronic signals to throttling system 220, braking system 230, and/or steering system 240 of vehicle 200 to trigger a change in velocity and/or acceleration by, for example, physically depressing the brake or easing up off the accelerator of vehicle 200.

[00102] In one embodiment, navigational response module 408 may store software executable by processing unit 110 to determine a desired navigational response based on data derived from execution of monocular image analysis module 402 and/or stereo image analysis module 404. Such data may include position and speed information associated with nearby vehicles, pedestrians, and road objects, target position information for vehicle 200, and the like. Additionally, in some embodiments, the navigational response may be based (partially or fully) on map data, a predetermined position of vehicle 200, and/or a relative velocity or a relative acceleration between vehicle 200 and one or more objects detected from execution of monocular image analysis module 402 and/or stereo image analysis module 404. Navigational response module 408 may also determine a desired navigational response based on sensory input (e.g., information from radar) and inputs from other systems of vehicle 200, such as throttling system 220, braking system 230, and steering system 240 of vehicle 200. Based on the desired navigational response, processing unit 110 may transmit electronic signals to throttling system 220, braking system 230, and steering system 240 of vehicle 200 to trigger a desired navigational response by, for example, turning the steering wheel of vehicle 200 to achieve a rotation of a predetermined angle. In some embodiments, processing unit 110 may use the output of navigational response module 408 (e.g., the desired navigational response) as an input to execution of velocity and acceleration module 406 for calculating a change in speed of vehicle 200.

[00103] FIG. 5A is a flowchart showing an exemplary process 500A for causing one or more navigational responses based on monocular image analysis, consistent with disclosed embodiments. At step 510, processing unit 110 may receive a plurality of

images via data interface 128 between processing unit 110 and image acquisition unit 120. For instance, a camera included in image acquisition unit 120 (such as image capture device 122 having field of view 202) may capture a plurality of images of an area forward of vehicle 200 (or to the sides or rear of a vehicle, for example) and transmit them over a data connection (e.g., digital, wired, USB, wireless, Bluetooth, etc.) to processing unit 110. Processing unit 110 may execute monocular image analysis module 402 to analyze the plurality of images at step 520, as described in further detail in connection with FIGS. 5B-5D below. By performing the analysis, processing unit 110 may detect a set of features within the set of images, such as lane markings, vehicles, pedestrians, road signs, highway exit ramps, traffic lights, and the like.

[00104] Processing unit 110 may also execute monocular image analysis module 402 to detect various road hazards at step 520, such as, for example, parts of a truck tire, fallen road signs, loose cargo, small animals, and the like. Road hazards may vary in structure, shape, size, and color, which may make detection of such hazards more challenging. In some embodiments, processing unit 110 may execute monocular image analysis module 402 to perform multi-frame analysis on the plurality of images to detect road hazards. For example, processing unit 110 may estimate camera motion between consecutive image frames and calculate the disparities in pixels between the frames to construct a 3D-map of the road or of certain areas of the road (e.g., within a region of interest defined around image data which is suspected to show a road hazard). Processing unit 110 may then use the 3D-map to detect road hazards. For example, segmentation techniques and classification techniques can be used to detect the road surface, as well as hazards existing above the road surface. For example, as explained in additional detail below, a system may detect features of a road surface such as painted lane lines or lane markings, and may additionally detect features of a roadway existing above the road surface, such as cones/barrels/poles/barriers in a construction zone, guard rails, other vehicles, road signs, and the like.

[00105] At step 530, processing unit 110 may execute navigational response module 408 to cause one or more navigational responses in vehicle 200 based on the analysis performed at step 520 and the techniques as described above in connection with FIG. 4. Navigational responses may include, for example, a turn, a lane shift, a change in

acceleration, and the like. In some embodiments, processing unit 110 may use data derived from execution of velocity and acceleration module 406 to cause the one or more navigational responses. Additionally, multiple navigational responses may occur simultaneously, in sequence, or any combination thereof. For instance, processing unit 110 may cause vehicle 200 to shift one lane over and then accelerate by, for example, sequentially transmitting control signals to steering system 240 and throttling system 220 of vehicle 200. Alternatively, processing unit 110 may cause vehicle 200 to brake while at the same time shifting lanes by, for example, simultaneously transmitting control signals to braking system 230 and steering system 240 of vehicle 200.

[00106] FIG. 5B is a flowchart showing an exemplary process 500B for detecting one or more vehicles and/or pedestrians in a set of images, consistent with disclosed embodiments. Processing unit 110 may execute monocular image analysis module 402 to implement process 500B. At step 540, processing unit 110 may determine a set of candidate objects representing possible vehicles and/or pedestrians. For example, processing unit 110 may scan one or more images, compare the images to one or more predetermined patterns, and identify within each image possible locations that may contain objects of interest (e.g., vehicles, pedestrians, or portions thereof). The predetermined patterns may be designed in such a way to achieve a high rate of "false hits" and a low rate of "misses." For example, processing unit 110 may use a low threshold of similarity to predetermined patterns for identifying candidate objects as possible vehicles or pedestrians. Doing so may allow processing unit 110 to reduce the probability of missing (e.g., not identifying) a candidate object representing a vehicle or pedestrian.

[00107] At step 542, processing unit 110 may filter the set of candidate objects to exclude certain candidates (e.g., irrelevant or less relevant objects) based on classification criteria. Such criteria may be derived from various properties associated with object types stored in a database (e.g., a database stored in memory 140). Properties may include object shape, dimensions, texture, position (e.g., relative to vehicle 200), and the like. Thus, processing unit 110 may use one or more sets of criteria to reject false candidates from the set of candidate objects.

[00108] At step 544, processing unit 110 may analyze multiple frames of images to determine whether objects in the set of candidate objects represent vehicles and/or pedestrians. For example, processing unit 110 may track a detected candidate object across consecutive frames and accumulate frame-by-frame data associated with the detected object (e.g., size, position relative to vehicle 200, etc.). Additionally, processing unit 110 may estimate parameters for the detected object and compare the object's frame-by-frame position data to a predicted position.

[00109] At step 546, processing unit 110 may construct a set of measurements for the detected objects. Such measurements may include, for example, size, position, velocity, and acceleration values (relative to vehicle 200) associated with the detected objects. In some embodiments, processing unit 110 may construct the measurements based on estimation techniques using a series of time-based observations such as Kalman filters or linear quadratic estimation (LQE), and/or based on available modeling data for different object types (e.g., cars, trucks, pedestrians, bicycles, road signs, etc.). The Kalman filters may be based on a measurement of an object's scale, where the scale measurement is proportional to a time to collision (e.g., the amount of time for vehicle 200 to reach the object). Thus, by performing steps 540-546, processing unit 110 may identify vehicles and pedestrians appearing within the set of captured images and derive information (e.g., position, speed, size) associated with the vehicles and pedestrians. Based on the identification and the derived information, processing unit 110 may cause one or more navigational responses in vehicle 200, as described in connection with FIG. 5A, above.

[00110] At step 548, processing unit 110 may perform an optical flow analysis of one or more images to reduce the probabilities of detecting a "false hit" and missing a candidate object that represents a vehicle or pedestrian. The optical flow analysis may refer to, for example, analyzing motion patterns relative to vehicle 200 in the one or more images associated with other vehicles and pedestrians, and that are distinct from road surface motion. Processing unit 110 may calculate the motion of candidate objects by observing the different positions of the objects across multiple image frames, which are captured at different times. Processing unit 110 may use the position and time

values as inputs into mathematical models for calculating the motion of the candidate objects. Thus, optical flow analysis may provide another method of detecting vehicles and pedestrians that are nearby vehicle 200. Processing unit 110 may perform optical flow analysis in combination with steps 540-546 to provide redundancy for detecting vehicles and pedestrians and increase the reliability of system 100.

[00111] FIG. 5C is a flowchart showing an exemplary process 500C for detecting road marks and/or lane geometry information in a set of images, consistent with disclosed embodiments. Processing unit 110 may execute monocular image analysis module 402 to implement process 500C. At step 550, processing unit 110 may detect a set of objects by scanning one or more images. To detect segments of lane markings, lane geometry information, and other pertinent road marks, processing unit 110 may filter the set of objects to exclude those determined to be irrelevant (e.g., minor potholes, small rocks, etc.). At step 552, processing unit 110 may group together the segments detected in step 550 belonging to the same road mark or lane mark. Based on the grouping, processing unit 110 may develop a model to represent the detected segments, such as a mathematical model.

[00112] At step 554, processing unit 110 may construct a set of measurements associated with the detected segments. In some embodiments, processing unit 110 may create a projection of the detected segments from the image plane onto the real-world plane. The projection may be characterized using a 3rd-degree polynomial having coefficients corresponding to physical properties such as the position, slope, curvature, and curvature derivative of the detected road. In generating the projection, processing unit 110 may take into account changes in the road surface, as well as pitch and roll rates associated with vehicle 200. In addition, processing unit 110 may model the road elevation by analyzing position and motion cues present on the road surface. Further, processing unit 110 may estimate the pitch and roll rates associated with vehicle 200 by tracking a set of feature points in the one or more images.

[00113] At step 556, processing unit 110 may perform multi-frame analysis by, for example, tracking the detected segments across consecutive image frames and accumulating frame-by-frame data associated with detected segments. As processing

unit 110 performs multi-frame analysis, the set of measurements constructed at step 554 may become more reliable and associated with an increasingly higher confidence level. Thus, by performing steps 550-556, processing unit 110 may identify road marks appearing within the set of captured images and derive lane geometry information. Based on the identification and the derived information, processing unit 110 may cause one or more navigational responses in vehicle 200, as described in connection with FIG. 5A, above.

[00114] At step 558, processing unit 110 may consider additional sources of information to further develop a safety model for vehicle 200 in the context of its surroundings. Processing unit 110 may use the safety model to define a context in which system 100 may execute autonomous control of vehicle 200 in a safe manner. To develop the safety model, in some embodiments, processing unit 110 may consider the position and motion of other vehicles, the detected road edges and barriers, and/or general road shape descriptions extracted from map data (such as data from map database 160). By considering additional sources of information, processing unit 110 may provide redundancy for detecting road marks and lane geometry and increase the reliability of system 100.

[00115] FIG. 5D is a flowchart showing an exemplary process 500D for detecting traffic lights in a set of images, consistent with disclosed embodiments. Processing unit 110 may execute monocular image analysis module 402 to implement process 500D. At step 560, processing unit 110 may scan the set of images and identify objects appearing at locations in the images likely to contain traffic lights. For example, processing unit 110 may filter the identified objects to construct a set of candidate objects, excluding those objects unlikely to correspond to traffic lights. The filtering may be done based on various properties associated with traffic lights, such as shape, dimensions, texture, position (e.g., relative to vehicle 200), and the like. Such properties may be based on multiple examples of traffic lights and traffic control signals and stored in a database. In some embodiments, processing unit 110 may perform multi-frame analysis on the set of candidate objects reflecting possible traffic lights. For example, processing unit 110 may track the candidate objects across consecutive image frames,

estimate the real-world position of the candidate objects, and filter out those objects that are moving (which are unlikely to be traffic lights). In some embodiments, processing unit 110 may perform color analysis on the candidate objects and identify the relative position of the detected colors appearing inside possible traffic lights.

[00116] At step 562, processing unit 110 may analyze the geometry of a junction. The analysis may be based on any combination of: (i) the number of lanes detected on either side of vehicle 200, (ii) markings (such as arrow marks) detected on the road, and (iii) descriptions of the junction extracted from map data (such as data from map database 160). Processing unit 110 may conduct the analysis using information derived from execution of monocular analysis module 402. In addition, Processing unit 110 may determine a correspondence between the traffic lights detected at step 560 and the lanes appearing near vehicle 200.

[00117] As vehicle 200 approaches the junction, at step 564, processing unit 110 may update the confidence level associated with the analyzed junction geometry and the detected traffic lights. For instance, the number of traffic lights estimated to appear at the junction as compared with the number actually appearing at the junction may impact the confidence level. Thus, based on the confidence level, processing unit 110 may delegate control to the driver of vehicle 200 in order to improve safety conditions. By performing steps 560-564, processing unit 110 may identify traffic lights appearing within the set of captured images and analyze junction geometry information. Based on the identification and the analysis, processing unit 110 may cause one or more navigational responses in vehicle 200, as described in connection with FIG. 5A, above.

[00118] FIG. 5E is a flowchart showing an exemplary process 500E for causing one or more navigational responses in vehicle 200 based on a vehicle path, consistent with the disclosed embodiments. At step 570, processing unit 110 may construct an initial vehicle path associated with vehicle 200. The vehicle path may be represented using a set of points expressed in coordinates (x, z), and, in some embodiments, the distance d_i between two points in the set of points may fall in the range of 1 to 5 meters, or in further examples, a timing measure can be used to provide the set of points, whereby the points in the set of points are 0.5 second to 5 seconds apart from one another (e.g.,

1.5 seconds apart). In one embodiment, processing unit 110 may construct the initial vehicle path using two polynomials, such as left and right road polynomials. Processing unit 110 may calculate the geometric midpoint between the two polynomials and offset each point included in the resultant vehicle path by a predetermined offset (e.g., a smart lane offset), if any (an offset of zero may correspond to travel in the middle of a lane). The offset may be in a direction perpendicular to a segment between any two points in the vehicle path. In another embodiment, processing unit 110 may use one polynomial and an estimated lane width to offset each point of the vehicle path by half the estimated lane width plus a predetermined offset (e.g., a smart lane offset).

[00119] At step 572, processing unit 110 may update the vehicle path constructed at step 570. Processing unit 110 may reconstruct the vehicle path constructed at step 570 using a higher resolution, such that the distance d_k between two points in the set of points representing the vehicle path is less than the distance d_i described above. For example, the distance d_k may fall in the range of 0.1 to 0.3 meters. Processing unit 110 may reconstruct the vehicle path using a parabolic spline algorithm, which may yield a cumulative distance vector S corresponding to the total length of the vehicle path (i.e., based on the set of points representing the vehicle path).

[00120] At step 574, processing unit 110 may determine a look-ahead point (expressed in coordinates as (x_1, z_1)) based on the updated vehicle path constructed at step 572. Processing unit 110 may extract the look-ahead point from the cumulative distance vector S, and the look-ahead point may be associated with a look-ahead distance and look-ahead time. The look-ahead distance, which may have a lower bound ranging from 10 to 20 meters, may be calculated as the product of the speed of vehicle 200 and the look-ahead time. For example, as the speed of vehicle 200 decreases, the look-ahead distance may also decrease (e.g., until it reaches the lower bound). The look-ahead time, which may range from 0.5 to 1.5 seconds, may be inversely proportional to the gain of one or more control loops associated with causing a navigational response in vehicle 200, such as the heading error tracking control loop. For example, the gain of the heading error tracking control loop may depend on the bandwidth of a yaw rate loop, a steering actuator loop, car lateral dynamics, and the

like. Thus, the higher the gain of the heading error tracking control loop, the lower the look-ahead time.

[00121] At step 576, processing unit 110 may determine a heading error and yaw rate command based on the look-ahead point determined at step 574. Processing unit 110 may determine the heading error by calculating the arctangent of the look-ahead point, e.g., arctan (x_1/z_1). Processing unit 110 may determine the yaw rate command as the product of the heading error and a high-level control gain. The high-level control gain may be equal to: (2/look-ahead time), if the look-ahead distance is not at the lower bound. Otherwise, the high-level control gain may be equal to: (2*speed of vehicle 200/look-ahead distance).

[00122] FIG. 5F is a flowchart showing an exemplary process 500F for determining whether a leading vehicle is changing lanes, consistent with the disclosed embodiments. At step 580, processing unit 110 may determine navigation information associated with a leading vehicle (e.g., a vehicle traveling ahead of vehicle 200). For example, processing unit 110 may determine the position, velocity (e.g., direction and speed), and/or acceleration of the leading vehicle, using the techniques described in connection with FIGS. 5A and 5B, above. Processing unit 110 may also determine one or more road polynomials, a look-ahead point (associated with vehicle 200), and/or a snail trail (e.g., a set of points describing a path taken by the leading vehicle), using the techniques described in connection with FIG. 5E, above.

[00123] At step 582, processing unit 110 may analyze the navigation information determined at step 580. In one embodiment, processing unit 110 may calculate the distance between a snail trail and a road polynomial (e.g., along the trail). If the variance of this distance along the trail exceeds a predetermined threshold (for example, 0.1 to 0.2 meters on a straight road, 0.3 to 0.4 meters on a moderately curvy road, and 0.5 to 0.6 meters on a road with sharp curves), processing unit 110 may determine that the leading vehicle is likely changing lanes. In the case where multiple vehicles are detected traveling ahead of vehicle 200, processing unit 110 may compare the snail trails associated with each vehicle. Based on the comparison, processing unit 110 may determine that a vehicle whose snail trail does not match with the snail trails of the other

vehicles is likely changing lanes. Processing unit 110 may additionally compare the curvature of the snail trail (associated with the leading vehicle) with the expected curvature of the road segment in which the leading vehicle is traveling. The expected curvature may be extracted from map data (e.g., data from map database 160), from road polynomials, from other vehicles' snail trails, from prior knowledge about the road, and the like. If the difference in curvature of the snail trail and the expected curvature of the road segment exceeds a predetermined threshold, processing unit 110 may determine that the leading vehicle is likely changing lanes.

[00124] In another embodiment, processing unit 110 may compare the leading vehicle's instantaneous position with the look-ahead point (associated with vehicle 200) over a specific period of time (e.g., 0.5 to 1.5 seconds). If the distance between the leading vehicle's instantaneous position and the look-ahead point varies during the specific period of time, and the cumulative sum of variation exceeds a predetermined threshold (for example, 0.3 to 0.4 meters on a straight road, 0.7 to 0.8 meters on a moderately curvy road, and 1.3 to 1.7 meters on a road with sharp curves), processing unit 110 may determine that the leading vehicle is likely changing lanes. In another embodiment, processing unit 110 may analyze the geometry of the snail trail by comparing the lateral distance traveled along the trail with the expected curvature of the snail trail. The expected radius of curvature may be determined according to the calculation: $(\delta_z^2+\delta_x^2)/2/(\delta_x)$, where δ_x represents the lateral distance traveled and δ_z represents the longitudinal distance traveled. If the difference between the lateral distance traveled and the expected curvature exceeds a predetermined threshold (e.g., 500 to 700 meters), processing unit 110 may determine that the leading vehicle is likely changing lanes. In another embodiment, processing unit 110 may analyze the position of the leading vehicle. If the position of the leading vehicle obscures a road polynomial (e.g., the leading vehicle is overlaid on top of the road polynomial), then processing unit 110 may determine that the leading vehicle is likely changing lanes. In the case where the position of the leading vehicle is such that, another vehicle is detected ahead of the leading vehicle and the snail trails of the two vehicles are not parallel, processing unit 110 may determine that the (closer) leading vehicle is likely changing lanes.

[00125] At step 584, processing unit 110 may determine whether or not leading vehicle 200 is changing lanes based on the analysis performed at step 582. For example, processing unit 110 may make the determination based on a weighted average of the individual analyses performed at step 582. Under such a scheme, for example, a decision by processing unit 110 that the leading vehicle is likely changing lanes based on a particular type of analysis may be assigned a value of "1" (and "0" to represent a determination that the leading vehicle is not likely changing lanes). Different analyses performed at step 582 may be assigned different weights, and the disclosed embodiments are not limited to any particular combination of analyses and weights.

[00126] FIG. 6 is a flowchart showing an exemplary process 600 for causing one or more navigational responses based on stereo image analysis, consistent with disclosed embodiments. At step 610, processing unit 110 may receive a first and second plurality of images via data interface 128. For example, cameras included in image acquisition unit 120 (such as image capture devices 122 and 124 having fields of view 202 and 204) may capture a first and second plurality of images of an area forward of vehicle 200 and transmit them over a digital connection (e.g., USB, wireless, Bluetooth, etc.) to processing unit 110. In some embodiments, processing unit 110 may receive the first and second plurality of images via two or more data interfaces. The disclosed embodiments are not limited to any particular data interface configurations or protocols.

[00127] At step 620, processing unit 110 may execute stereo image analysis module 404 to perform stereo image analysis of the first and second plurality of images to create a 3D map of the road in front of the vehicle and detect features within the images, such as lane markings, vehicles, pedestrians, road signs, highway exit ramps, traffic lights, road hazards, and the like. Stereo image analysis may be performed in a manner similar to the steps described in connection with FIGS. 5A-5D, above. For example, processing unit 110 may execute stereo image analysis module 404 to detect candidate objects (e.g., vehicles, pedestrians, road marks, traffic lights, road hazards, etc.) within the first and second plurality of images, filter out a subset of the candidate objects based on various criteria, and perform multi-frame analysis, construct measurements, and determine a confidence level for the remaining candidate objects.

In performing the steps above, processing unit 110 may consider information from both the first and second plurality of images, rather than information from one set of images alone. For example, processing unit 110 may analyze the differences in pixel-level data (or other data subsets from among the two streams of captured images) for a candidate object appearing in both the first and second plurality of images. As another example, processing unit 110 may estimate a position and/or velocity of a candidate object (e.g., relative to vehicle 200) by observing that the object appears in one of the plurality of images but not the other or relative to other differences that may exist relative to objects appearing if the two image streams. For example, position, velocity, and/or acceleration relative to vehicle 200 may be determined based on trajectories, positions, movement characteristics, etc. of features associated with an object appearing in one or both of the image streams.

[00128] At step 630, processing unit 110 may execute navigational response module 408 to cause one or more navigational responses in vehicle 200 based on the analysis performed at step 620 and the techniques as described above in connection with FIG. 4. Navigational responses may include, for example, a turn, a lane shift, a change in acceleration, a change in velocity, braking, and the like. In some embodiments, processing unit 110 may use data derived from execution of velocity and acceleration module 406 to cause the one or more navigational responses. Additionally, multiple navigational responses may occur simultaneously, in sequence, or any combination thereof.

[00129] FIG. 7 is a flowchart showing an exemplary process 700 for causing one or more navigational responses based on an analysis of three sets of images, consistent with disclosed embodiments. At step 710, processing unit 110 may receive a first, second, and third plurality of images via data interface 128. For instance, cameras included in image acquisition unit 120 (such as image capture devices 122, 124, and 126 having fields of view 202, 204, and 206) may capture a first, second, and third plurality of images of an area forward and/or to the side of vehicle 200 and transmit them over a digital connection (e.g., USB, wireless, Bluetooth, etc.) to processing unit 110. In some embodiments, processing unit 110 may receive the first, second, and third

plurality of images via three or more data interfaces. For example, each of image capture devices 122, 124, 126 may have an associated data interface for communicating data to processing unit 110. The disclosed embodiments are not limited to any particular data interface configurations or protocols.

[00130] At step 720, processing unit 110 may analyze the first, second, and third plurality of images to detect features within the images, such as lane markings, vehicles, pedestrians, road signs, highway exit ramps, traffic lights, road hazards, and the like. The analysis may be performed in a manner similar to the steps described in connection with FIGS. 5A-5D and 6, above. For instance, processing unit 110 may perform monocular image analysis (e.g., via execution of monocular image analysis module 402 and based on the steps described in connection with FIGS. 5A-5D, above) on each of the first, second, and third plurality of images. Alternatively, processing unit 110 may perform stereo image analysis (e.g., via execution of stereo image analysis module 404 and based on the steps described in connection with FIG. 6, above) on the first and second plurality of images, the second and third plurality of images, and/or the first and third plurality of images. The processed information corresponding to the analysis of the first, second, and/or third plurality of images may be combined. In some embodiments, processing unit 110 may perform a combination of monocular and stereo image analyses. For example, processing unit 110 may perform monocular image analysis (e.g., via execution of monocular image analysis module 402) on the first plurality of images and stereo image analysis (e.g., via execution of stereo image analysis module 404) on the second and third plurality of images. The configuration of image capture devices 122, 124, and 126 – including their respective locations and fields of view 202, 204, and 206 – may influence the types of analyses conducted on the first, second, and third plurality of images. The disclosed embodiments are not limited to a particular configuration of image capture devices 122, 124, and 126, or the types of analyses conducted on the first, second, and third plurality of images.

[00131] In some embodiments, processing unit 110 may perform testing on system 100 based on the images acquired and analyzed at steps 710 and 720. Such testing may provide an indicator of the overall performance of system 100 for certain

configurations of image capture devices 122, 124, and 126. For example, processing unit 110 may determine the proportion of "false hits" (e.g., cases where system 100 incorrectly determined the presence of a vehicle or pedestrian) and "misses."

[00132] At step 730, processing unit 110 may cause one or more navigational responses in vehicle 200 based on information derived from two of the first, second, and third plurality of images. Selection of two of the first, second, and third plurality of images may depend on various factors, such as, for example, the number, types, and sizes of objects detected in each of the plurality of images. Processing unit 110 may also make the selection based on image quality and resolution, the effective field of view reflected in the images, the number of captured frames, the extent to which one or more objects of interest actually appear in the frames (e.g., the percentage of frames in which an object appears, the proportion of the object that appears in each such frame, etc.), and the like.

[00133] In some embodiments, processing unit 110 may select information derived from two of the first, second, and third plurality of images by determining the extent to which information derived from one image source is consistent with information derived from other image sources. For example, processing unit 110 may combine the processed information derived from each of image capture devices 122, 124, and 126 (whether by monocular analysis, stereo analysis, or any combination of the two) and determine visual indicators (e.g., lane markings, a detected vehicle and its location and/or path, a detected traffic light, etc.) that are consistent across the images captured from each of image capture devices 122, 124, and 126. Processing unit 110 may also exclude information that is inconsistent across the captured images (e.g., a vehicle changing lanes, a lane model indicating a vehicle that is too close to vehicle 200, etc.). Thus, processing unit 110 may select information derived from two of the first, second, and third plurality of images based on the determinations of consistent and inconsistent information.

[00134] Navigational responses may include, for example, a turn, a lane shift, a change in acceleration, and the like. Processing unit 110 may cause the one or more navigational responses based on the analysis performed at step 720 and the techniques

as described above in connection with FIG. 4. Processing unit 110 may also use data derived from execution of velocity and acceleration module 406 to cause the one or more navigational responses. In some embodiments, processing unit 110 may cause the one or more navigational responses based on a relative position, relative velocity, and/or relative acceleration between vehicle 200 and an object detected within any of the first, second, and third plurality of images. Multiple navigational responses may occur simultaneously, in sequence, or any combination thereof.

[00135] Lane Constraint Prediction

[00136] System 100 may provide vehicle 200 with lane constraint prediction techniques, such that the system predicts the location of one or more lane constraints.

[00137] In some embodiments, lane constraint prediction may be understood as one or more techniques for predicting the location of a lane constraint. A lane constraint, in some embodiments, may be defined as the boundary at the edge of a lane, roadway, parking space, or other path or space in which a vehicle should be caused to travel. In some situations, a lane constraint may be marked on a roadway, such as by painted lines, a physical barrier, Botts' dots, or one or more additional indicators. In some embodiments, a lane constraint may be defined by the edge of a roadway, a curb, a guard-rail, or the like. In some embodiments, a lane constraint may be defined by one or more other vehicles, such as a row of parallel-parked vehicles adjacent to the lane, or a row of parked vehicles in a parking lot. In some embodiments, a lane constraint may be unmarked, such as on an unmarked roadway or in a parking lot without lane lines.

[00138] In some embodiments, a self-driving or driver-assist system may use image capture devices and image analysis to determine the location of one or more lane constraints based on objects detected in the images, such as lane markings, edges of roadways, and/or other vehicles. In most driving situations, the system may be able to detect at least two lane constraints – one on each side of the lane in which the vehicle is traveling – based on the visible characteristics (e.g., lane lines, etc.) of the captured images.

[00139] In certain situations, however, including those in which only one lane constraint on one side of a lane or on one side of vehicle 200 can be sufficiently

detected based on visible characteristics in the captured images (e.g., lane lines, etc.), system 100 may predict the position of a lane constraint on the other side of the lane or on the other side of the vehicle, allowing the vehicle to continue to travel within a lane defined by the detected constraint and the predicted constraint opposite it.

[00140] In some embodiments, lane constraint prediction may be performed by system 100 subject to one or more conditions being satisfied. For example, in some embodiments, system 100 predicts the location of a lane constraint when a previously-detected lane constraint ceases to be detected as vehicle 200 progresses along a roadway. Thus, in some embodiments if a lane marking or other detected lane constraint suddenly ends or becomes undetectable, then lane constraint prediction may be performed. In other examples, system 100 predicts the location of a lane constraint when the system determines that guard-rail shadow conditions are present, such that a guard rail is present in the vicinity of the roadway or a guardrail is casting a shadow onto the roadway.

[00141] In some embodiments, system 100 may only perform lane constraint prediction when system 100 has access to valid and sufficient historical information about the width of a lane in which vehicle 200 is traveling; in situations in which a lane constraint on one side of vehicle 200 is newly detected as vehicle 200 progresses along a roadway, system 100 may in some embodiments refrain from performing lane constraint prediction.

[00142] In some embodiments, lane constraint prediction may be performed for a maximum travel distance, such that, if vehicle 200 travels greater than a predefined maximum travel distance while system 100 is continuously performing lane constraint prediction, then lane constraint prediction may then be ceased. In some embodiments, the predefined maximum travel distance may be set or modified in accordance with one or more various factors detected by system 100. In some embodiments, the predefined maximum travel distance may be turned off (*e.g.*, it may be functionally set to "infinite") in accordance with one or more various factors detected by system 100.

[00143] In some embodiments, lane constraint prediction may be ceased in accordance with various cancellation conditions detected by system 100. For example,

in some embodiments, if a driver of vehicle 200 changes lanes, then lane constraint prediction may be ceased. In some embodiments, if vehicle 200 is traversing a curve in the roadway that exceeds a predefined curve sharpness threshold, then lane constraint prediction may be ceased.

[00144] FIGS. 8A-8C illustrate an embodiment in which vehicle 200 travels on a roadway 800. In some embodiments, vehicle 200 may have one or more fields of vision provided by one or more image capture devices or cameras, such as image capture devices 122, 124, and/or 126. In the depicted example, vehicle 200 may have a field of vision facing frontward from the vehicle, as depicted by the angled lines forming an upward-opening triangle in front of vehicle 200; in some embodiments, vehicle 200 may have one or more fields of vision facing in multiple different directions from vehicle 200. In the depicted example, the disclosed systems and methods for lane constraint prediction (e.g., predicting the location of a lane constraint when one is not detected) and operating vehicle 200 within a lane defined by a predicted lane constraint may be used. As shown, roadway 800 may have lane 802 in which vehicle 200 is traveling. Lane 802 may be defined on a first side by first lane constraint 804 and on a second side, opposite the first side, by lane constraint 806. These lane constraints 804 and 806 may be detected by system 100, as indicated by the bolded lines showing lane constraints 804 and 806. Vehicle 200 may have a first vehicle side 808 on the same side of vehicle 200 as first lane constraint 804, and a second vehicle side 810 on the same side of vehicle 200 as second lane constraint 806.

[00145] Processing unit 110 may be configured to determine first lane constraint 804 and second lane constraint 806 based on a plurality of images acquired by image capture device 122-126 that processing unit 110 may receive via data interface 128. According to some embodiments, first lane constraint 804 and/or second lane constraint 806 may be identified by visible lane boundaries, such as dashed or solid lines marked on a road surface, such as lane lines 803a (solid line) and 803b (dashed line). Additionally or alternatively, first lane constraint 804 and/or second lane constraint 806 may be identified by an edge of a road surface or a barrier. Additionally or alternatively, first lane constraint 804 and/or second lane constraint 806 may be identified by markers

(e.g., Botts' dots). According to some embodiments, processing unit 110 may determine first lane constraint 804 and/or second lane constraint 806 by identifying a midpoint of a road surface width. According to some embodiments, if processing unit 110 identifies only first lane constraint 804, processing unit 110 may estimate second lane constraint 806, such as based on an estimated lane width or road width. Processing unit 110 may predict lane constraints in this manner when, for example, lines designating road lanes are not painted or otherwise labeled.

[00146] In FIGS. 8A-8C, lane constraints 804 and 806 are marked on roadway 800 by solid and dashed lines 803a and 803b, respectively. In a portion of roadway 800 toward the center of FIGS. 8A-8C, dashed line 803b corresponding to lane constraint 806 is not painted on roadway 800. In FIGS. 8A-8C, the detection of lane constraints 804 and 806 by system 100 is depicted by the bolded lines that overlay the respective lane lines in front of vehicle 200. As depicted by the bolded lines in FIG. 8A, system 100 detects lane constraint 804 as a solid-line lane constraint on the left side of vehicle 200 for a certain visible distance in front of vehicle 200. Similarly, system 100 detects lane constraint 806 as a dashed-line lane constraint on the right side of vehicle 200 for a certain visible distance in front of vehicle 200. In accordance with the detection of lane constraints 804 and 806, system 100 causes vehicle 200 to travel inside lane 802 as defined by lane constraints 804 and 806.

[00147] FIG. 8B depicts vehicle 200 continuing to progress along roadway 800 in lane 802 following the point in time depicted in FIG. 8A. As vehicle 200 reaches the portion of roadway 800 at which dashed line 803b is not painted on roadway 800, lane constraint prediction may be performed by system 100. As shown, system 100 predicts the location of lane constraint 806 as being located a distance 812 from opposite lane constraint 804. This distance 812 may be determined, in some embodiments, based on the historical information detected and stored by system 100 about the previous widths of lane 802 and/or the average historical width of lanes in general. As shown, system 100 predicts that lane constraint 806 continues to be a dashed lane constraint, based on the fact that lane constraint 806 was marked by dashed lane line 803b at the last time that lane constraint 806 was detected by system 100 before lane constraint

prediction was activated. In accordance with the continued detection of lane constraint 804 and the prediction of lane constraint 806, system 100 causes vehicle 200 to continue to travel inside lane 802 as defined by lane constraints 804 and 806. In some embodiments, when lane constraint prediction is activated, and possibly under certain circumstances (e.g., there are other vehicles nearby), a certain default type of lane constraint is used to control the motion of the vehicle which is not necessarily the same as the last lane constraint that was detected previous to the activation of the lane constraint prediction. For example, in some embodiments, a system may default to predicting solid-line lane constraints rather than dashed-line lane constraints.

[00148] FIG. 8C depicts vehicle 200 continuing to progress along roadway 800 in lane 802 following the point in time depicted in FIG. 8B. As vehicle 200 reaches the portion of roadway 800 at which dashed line 803b is once again painted on roadway 800, lane constraint prediction may cease to be performed by system 100, as lane constraint 806 is once again detected (rather than predicted) as a dashed lane constraint by system 100. As depicted in FIG. 8C, vehicle 200 has traveled distance 814 while performing lane constraint prediction. In some embodiments, lane constraint prediction may only be performed continuously or substantially continuously for a predefined maximum distance (and/or predefined maximum time). In the depicted example of FIG. 8C, distance 814 is less than the predefined maximum distance for performing lane constraint prediction, such that lane constraint prediction was able to be performed continuously as vehicle 200 traversed the distance between its position in FIG. 8B and its position in FIG. 8C. In some embodiments, the predefined maximum distance for performing lane constraint prediction may be set to a default of 18 meters. In some embodiments, the predefined maximum distance may be varied by vehicle manufacturers, drivers, and/or any other party.

[00149] FIGS. 9A-9C illustrate an embodiment in which vehicle 200 travels on a roadway 900. In the depicted example, the disclosed systems and methods for lane constraint prediction (e.g., predicting the location of a lane constraint when one is not detected) and operating vehicle 200 within a lane defined by a predicted lane constraint may be used. The example depicted in FIGS. 9A-9C differs from the example depicted

in FIGS. 8A-8C at least in that, on roadway 900, two lanes are merging into one lane. As explained in greater detail below, in some embodiments, lane constraint prediction may be performed when two lanes are merging into one lane and lane lines are not detected on the side of the lane into which a second lane is merging.

[00150] As shown, roadway 900 may have lane 902 in which vehicle 200 is traveling. Lane 902 may be defined on a first side by first lane constraint 904 and on a second side, opposite the first side, by lane constraint 906. These lane constraints 904 and 906 may be detected by system 100, as indicated by the bolded lines showing lane constraints 904 and 906. Vehicle 200 may have a first vehicle side 908 on the same side of vehicle 200 as first lane constraint 904, and a second vehicle side 910 on the same side of vehicle 200 as second lane constraint 906.

[00151] Processing unit 110 may be configured to determine first lane constraint 904 and second lane constraint 906 based on a plurality of images acquired by image capture device 122-126 that processing unit 110 may receive via data interface 128. According to some embodiments, first lane constraint 904 and/or second lane constraint 906 may be identified, detected, estimated, or predicted in any or all of the manners discussed above with respect to FIGS. 8A-8C.

[00152] As shown, roadway 900 may have lane 916. Lane 916 may be bounded by lane constraints. In the example shown, lane 916 is marked by solid lane line 918 on its left side and solid lane line 120 on its right side. In the example shown, lane 916 merges into lane 902 as roadway 900 continues in the direction of travel of vehicle 200.

[00153] In FIGS. 9A-9C, lane constraint 904 is continuously marked by solid line 903 on roadway 900. Lane constraint 906, on the other hand, is inconsistently marked; at the bottom-most portion of the figures, lane constraint 906 is marked by solid line 905a on roadway 900; at the portion above that, as lane 916 begins to merge into lane 902, lane constraint 906 is marked by dashed line 905b on roadway 900; at the portion above that, as lane 916 finishes merging into lane 902, lane constraint 906 is not marked; finally, at the top-most portion of the figures, lane constraint 906 is again marked by a solid line, this time by solid line 905c on roadway 900.

[00154] In FIGS. 9A-9C, the detection of lane constraints 904, 906, and 922 by system 100 is depicted by the bolded lines that overlay the respective lane lines in front of vehicle 200. As depicted by the bolded lines in FIG. 9A, system 100 detects lane constraint 904 as a solid-line lane constraint on the left side of vehicle 200 for a certain visible distance in front of vehicle 200. Similarly, system 100 detects lane constraint 906 as a solid lane constraint on the right side of vehicle 200 for a certain visible distance in front of vehicle 200. In accordance with the detection of lane constraints 904 and 906, system 100 causes vehicle 200 to travel inside lane 902 as defined by lane constraints 904 and 906.

[00155] FIG. 9B depicts vehicle 200 continuing to progress along roadway 900 in lane 902 following the point in time depicted in FIG. 9A. As vehicle 200 reaches the portion of roadway 900 at which lane 916 merges into lane 902 from the right side, where lane constraint 906 is marked briefly by dashed line 905b and then is not marked by any lines, lane constraint prediction may be performed by system 100. As shown, system 100 predicts the location of lane constraint 906 as being located a distance 912 from opposite lane constraint 904. This distance 912 may be determined, in some embodiments, based on the historical information detected and stored by system 100 about the previous widths of lane 902 and/or the average historical width of lanes in general. As shown, system 100 predicts that lane constraint 906 continues to be a dashed lane constraint, based on the fact that lane constraint 906 was marked by dashed line 905b at the last time that lane constraint 906 was detected by system 100 before lane constraint prediction was activated. In accordance with the continued detection of lane constraint 904 and the prediction of lane constraint 906, system 100 causes vehicle 200 to continue to travel inside lane 902 as defined by lane constraints 904 and 906.

[00156] Also shown in FIG. 9B is system 100 detecting lane constraint 922, which bounds the right side of lane 916, as lane 916 merges into lane 902. System 100 detects lane constraint 922 as a solid lane constraint based on the corresponding solid line 920 on roadway 900. In some embodiments, system 100 may determine that detected lane constraint 922 is not a constraint of lane 902 in which vehicle 200 is

traveling, but rather is a lane constraint of a lane that is merging into lane 902. This determination may be made, in some embodiments, in accordance with a determination lane constraint 922 is detected as approaching lane 902 at above a threshold rate of approach. For example, if a detected lane constraint outside a constraint of a lane in which the vehicle is traveling makes an angle that is more than a predefined threshold angle above parallel with a detected or previously detected lane constraint of the lane in which the vehicle is travelling, then the outside lane constraint may be determined to correspond to an approaching merging lane.

[00157] In some embodiments, the determination that a lane is merging into another lane may be made in accordance with the detection and analysis of other aspects, characteristics, or objects in the roadway in or around a vehicle. For example, a second vehicle (e.g., different from the vehicle in which the system is provided) may be detected and tracked, and the system may determine that the other vehicle is traveling at an angle to a lane on the roadway that is indicative of a lane in which the other vehicle is traveling merging into another lane. In some embodiments, the system may detect that the other vehicle is approaching a lane, from an area outside the lane, at above a threshold rate of approach. In some embodiments, the system may make such a determination about one or more other vehicles, and may accordingly determine that lanes around the one or more other vehicles are merging. In some embodiments, information about the one or more other vehicles may be received via the multiple images captured by cameras associated with the system; in some embodiments, alternatively or additionally, information about the one or more other vehicles may be received via any suitable form of electronic communication, such as communication transmitted from one or more of the one or more other vehicles.

[00158] In yet some other embodiments, the determination that lanes are merging may be made in accordance with historical information about lane configuration and/or layout, such as historical information about the lanes at or around the current location of the vehicle.

[00159] FIG. 9C depicts vehicle 200 continuing to progress along roadway 900 in lane 902 following FIG. 9B. As vehicle 200 reaches the portion of roadway 900 at which the

merge of lane 916 into lane 902 has been completed, lane constraint 906 is once again marked by a solid lines on roadway 900, this time by solid line 905c, and lane constraint prediction may cease to be performed by system 100, as lane constraint 906 is once again detected (rather than predicted) as a solid lane constraint by system 100. In some embodiments, system 100 may determine that it is detecting a lane constraint of the lane in which vehicle 200 is located (rather than a lane constraint of a merging lane) by determining that the lane constraint is no longer approaching the vehicle (or the lane in which the vehicle is traveling) at above the predefined threshold rate of approach. In some embodiments, system 100 may determine that it is detecting a lane constraint of the lane in which the vehicle is located (rather than a lane constraint of a merging lane) by determining that the lane constraint is within a predefined threshold distance of the predicted location of the lane constraint, as predicted by lane constraint prediction.

[00160] As depicted in FIG. 9C, vehicle 200 has traveled distance 914 while performing lane constraint prediction. In some embodiments, lane constraint prediction may only be performed continuously or substantially continuously for a predefined maximum distance (and/or predefined maximum time). According to some embodiments, the maximum distance/time that is allocated for lane constraint predication can be set dynamically. For example, the maximum distance/time that is allocated for lane constraint predication can be adjusted according to the vehicle's surrounding, the speed of the vehicle, the topology of the road, the brightness or the environment, the weather, the density and/or proximity of other vehicles on the roadway, and/or any other road conditions or characteristics. In some embodiments, when it is determined that an approaching merging lane is present in the vicinity of vehicle 200, system 100 may permit lane constraint prediction to be executed for a greater total distance than it would otherwise be permitted to be executed. For example, while a default maximum distance may be 18 meters, the maximum distance in situations when an ongoing lane merge is detected may be 1000 meters. This difference may account for the fact that lane merges may take several hundred meters to be completed. In the depicted example of FIG. 8C, distance 914 is less than the predefined maximum distance for performing lane constraint prediction in a lane merge situation, such that lane constraint prediction was able to be performed continuously as

vehicle 200 traversed the distance between its position in FIG. 9B and its position in FIG. 9C.

[00161] FIGS. 10A and 10B illustrate an embodiment in which vehicle 200 travels on roadway 1000. FIG. 10A shows a three-dimensional view as seen from the perspective of vehicle 200, such as one of the one or more images received by system 100 as vehicle 200 travels on roadway 1000. (FIG. 10A depicts a lead vehicle driving on roadway 1000 in front of vehicle 200, not to be confused with vehicle 200 itself.) FIG. 10B shows an overhead diagram of vehicle 200 on the same portion of roadway 1000.

[00162] In the depicted example, the disclosed systems and methods for lane constraint prediction (e.g., predicting the location of a lane constraint when guard rail shadow conditions are present) and operating vehicle 200 within a lane defined by a predicted lane constraint may be used. As shown, roadway 1000 may have lane 1002 in which vehicle 200 is traveling. Lane 1002 may be defined on a first side by first lane constraint 1004 and on a second side, opposite the first side, by lane constraint 1006. These lane constraints 1004 and 1006 may, in some embodiments, be detected by system 100, as indicated by the bolded lines showing lane constraints 1004 and 1006. Vehicle 200 may have a first vehicle side 1008 on the same side of vehicle 200 as first lane constraint 1004, and a second vehicle side 1010 on the same side of vehicle 200 as second lane constraint 1006.

[00163] Roadway 1000 may include lane lines 1003a and 1003b, which physically mark the left and right sides, respectively, of lane 1002 on roadway 1000.

[00164] Roadway 1000 may include guardrail 1012, which is supported by posts 1014. Both guard rail 1012 and its posts 1014 are casting guard rail shadow 1016, which in the depicted example falls over lane line 1003a and into lane 1002.

[00165] As depicted by the bolded lines in FIGS. 10A and 10B, system 100 detects lane constraint 1006 as a solid-line constraint on the right side of vehicle 200 for a certain visible distance in front of vehicle 200. On the left side of roadway 1000, the bolded lines show how system 1000 detects several edges, one of which is attributable to lane line 1003a and two of which (shadow edges 1005a and 1005b) are attributable to guard rail shadow 1016. In some embodiments, the detection of multiple edges on

one side of a vehicle or lane may make it more difficult to identify a lane constraint from the images available to system 100, such that the lane constraint cannot be identified with a high level of certainty. Accordingly, in some embodiments, when system 100 determines that guard rail 1012 or guard rail posts 1014 are present, that guard rail shadow 1016 is being cast onto roadway 1000, or that multiple edges are detected on the same side of lane 1002, system 100 may determine that guard rail shadow conditions are present, and may accordingly engage a guard rail shadow mode. In some embodiment, a guard rail shadow mode may cause lane constraint prediction to be executed for the side of a lane that is proximate to the detected guard rail, shadow, or edges. By using lane constraint prediction, system 100 may predict the location of lane constraint 1004 in accordance with any of the techniques discussed above with respect to FIGS. 8A-8C and/or 9A-9C. In the depicted example, system 100 correctly predicts the location of lane constraint 1002 to coincide with the edge defined by painted lane line 1003a, rather than either of the edges defined by guard rail shadow 1016. In accordance with the detection of lane constraints 1004 and 1006, system 100 causes vehicle 200 to travel inside lane 1002 as defined by lane constraints 1004 and 1006.

[00166] In some embodiments, guard rail shadow prediction may cause lane constraint prediction to be engaged with no limitation as to how long lane constraint prediction can be carried out. Thus, for example, rather than the maximum distance for lane constraint prediction being set to 18 meters (as in the example of FIGS. 8A-8C) or 1000 meters (as in the example of FIGS. 9A-9C), system 100 may turn off the maximum distance, functionally configuring the system so that lane constraint prediction may continue for an indefinite distance (and/or an indefinite time) so long as guard-rail shadow conditions continue to be detected and so long as no lane constraint prediction cancellation conditions are detected.

[00167] FIG. 11 is an exemplary block diagram of memory 140 or 150, which may store instructions for performing one or more operations consistent with disclosed embodiments. As illustrated in FIG. 11, memory 140 or 150 may store one or more modules for performing the techniques described herein. For example, memory 140 or

150 may store image obtaining module 1100, roadway lane constraint recognizing module 1102, determining module 1104, roadway lane constraint predicting module 1106, vehicle enabling module 1108, and lane constraint prediction ceasing module 1110. As would be appreciated by a person of ordinary skill in the art, any of the previously recited modules may be combined with each other or with other modules, interfaced with one another or with other modules, and/or subdivided into further modules and/or sub-modules.

[00168] In some embodiments, processing unit 110 may execute instructions stored on the one or more modules in memory 140 or 150, and the execution by processing unit 110 may cause system 100 to perform the methods discussed herein.

[00169] In some embodiments, processing unit 110 may cause system 100 to obtain (e.g., with image obtaining module 1100) multiple images from a camera (e.g., image capture devices 122, 124, and/or 126), wherein the camera is adapted to capture, when mounted on a vehicle (e.g., vehicle 200) and while the vehicle is in motion, images of a roadway within a field of view of the camera, apply image processing to the multiple images to recognize (e.g., with roadway lane constraint recognizing module 1102) a first roadway lane constraint, determine (e.g., with determining module 1104), based on the multiple images, that one or more defined lane prediction conditions are satisfied, in accordance with the a determination that one or more defined lane prediction conditions are satisfied, predict (e.g., with roadway lane constraint predicting module 1106) the location of a second roadway lane constraint, and issue (e.g., with issuing module 1108) a notification or a control signal to control a motion of the vehicle according to the predicted location of the second roadway lane constraint.

[00170] In some embodiments, processing unit 110 may cause system 100 to issue (e.g., with issuing module 1108) a notification or a control signal to direct a motion of the vehicle according to a location of the first roadway lane constraint.

[00171] In some embodiments, processing unit 110 may cause system 100 to issue (e.g., with issuing module 1108) a notification or a control signal to direct a motion of the vehicle along a lane or an area between the first roadway lane constraint and the second roadway lane constrain.

[00172] In some embodiments, processing unit 110 may cause system 100 to determine (e.g., with determining module 1104) whether one or more defined lane prediction cancellation conditions are satisfied, and in accordance with a determination that one or more defined lane prediction cancellation conditions are satisfied, cease to predict (e.g., with lane constraint prediction ceasing module 1110) the location of the second roadway lane constraint.

[00173] FIG. 12 illustrates a process 1200 for implementing lane constraint prediction consistent with the disclosed embodiments. In some embodiments, the steps in process 1200 may be illustrated by the situations illustrated in FIGS. 8A-8C, 9A-9C, and 10A-10B. According to some embodiments, process 1200 may be implemented by one or more components of navigation system 100, such as at least one processing unit 110. According to some embodiments, process 1200 may be implemented by system 100 associated with vehicle 200.

[00174] At step 1202, in some embodiments, a system receives multiple images of a roadway in the vicinity of a moving vehicle associated with the system. In some embodiments, the one or more images are acquired using at least one image capture device, such as image capture devices 122, 124, and/or 126. The plurality of images may be received by the system through a data interface such as data interface 128. In the example illustrated in FIGS. 8A-8C, system 100 may acquire a plurality of images of roadway 800 in the vicinity of vehicle 200.

[00175] At step 1204, in some embodiments, the system recognizes a first roadway lane constraint. In some embodiments, the system may use image analysis techniques to process the one or more images received to detect lane constraints by identifying objects, markings, or other characteristics in the images that are indicative of a lane constraint, such as lane markings, roadway edges, lane dividers, and/or other vehicles. In some embodiments, the system may attempt to identify at least one lane constraint on one side of the vehicle and another lane constraint on the other side of the vehicle (e.g., one lane constraint to each side of the center line of the vehicle in its traveling direction, front to back). In some embodiments, the system may attempt to identify at least one lane constraint on one side of a lane and another lane constraint on another

side of the lane. In the example illustrated in FIGS. 8A-8C, system 100 may analyze the images received of roadway 800, and may detect lane constraint 804 on the left side of lane 802 as corresponding to and coinciding with solid lane line 803a. That is, in some embodiments, lane line 803a may be recognized by system 100 in the multiple acquired images, and system 100 may determine that lane line 803a is a visual marker for lane constraint 804.

[00176] At step 1206, in some embodiments, the system determines, based on the multiple images, whether one or more defined lane prediction conditions are satisfied. In some embodiments, a lane prediction condition may be any predetermined condition by which system 100 may determine whether to predict the location of a lane constraint. In some embodiments, only one lane prediction condition need be satisfied, while in other embodiments, a minimum threshold number of lane prediction conditions (e.g., two or more) need to be satisfied. In some embodiments, the minimum threshold number of lane predication conditions can be determined in accordance with historical information regarding the roadway lane layout, the roadway topology, shadow conditions, visibility conditions, presence of guard rails and/or other barriers along the roadway, presence of other vehicles on the roadway, etc.

[00177] In some embodiments, the one or more defined lane prediction conditions comprise that the second roadway lane constraint ceases to be recognized, based on the multiple images, as the vehicle progresses. For example, in some embodiments, the system may continuously capture and consult multiple images corresponding to the vehicle's current location and vicinity; as the vehicle travels along a roadway and along a lane, a lane constraint that was recognizable at one instance in time based on one subset of the multiple images may cease to be recognizable at a subsequent instance in time based on a later subset of the multiple images. In the example of FIGS. 8A-8C, system 100 may analyze the images received of roadway 800 as vehicle 200 travels along roadway 800 from its position in FIG. 8A to its position in FIG. 8B. As vehicle 200 travels from its position in FIG. 8A to its position in FIG. 8B, it reaches the middle portion of roadway 800 at which dotted lane line 803b is not painted on roadway 800. Upon analyzing the received multiple images from this middle portion of roadway 800,

system 100 may cease to recognize lane constraint 806 due to the absence of lane line 803b. This ceasing to recognize a lane constraint as vehicle 200 progresses along roadway 800 may constitute a lane prediction condition in some embodiments.

[00178] In some embodiments, the one or more defined lane prediction conditions comprise that the lane constraint on the first side of the lane has been recognized for at least a threshold time or a threshold distance. Optionally, a threshold time or a threshold distance associated with the one or more defined lane prediction conditions can be dynamic and can be adjusted according to historical information regarding the roadway lane layout, the roadway topology, shadow conditions, visibility conditions, presence of guard rails or other barriers along the roadway, presence of other vehicles on the roadway, etc. In some embodiments, such a lane prediction condition may serve to prevent the system from (or reduce the likelihood of the system) engaging in lane constraint prediction when the system detects a lane constraint on a single side of a lane (or a single side of a vehicle) for a first time. That is, in some embodiments, if a vehicle is traveling and comes upon a single lane line or other lane marking or indicator for the first time, the system may refrain from predicting the location of another lane constraint based on the single lane marking/indicator. In some embodiments, this lane prediction condition may serve to ensure (or increase the likelihood) that the system is making valid and accurate lane constraint predictions based on actual lanes that exist on a roadway, and not on isolated, stray, or erroneously or randomly placed lane markings/indicators. In some embodiments, a predefined threshold distance may be fixed in the system, or may be determined by the system based on a current speed of the vehicle, the size or posted speed of the roadway on which the vehicle is traveling, or any other discernible variables regarding the vehicle or roadway.

[00179] In some embodiments, the one or more defined lane prediction conditions comprise that a guard rail is present in the vicinity of the vehicle. In some embodiments, the system may engage in lane constraint prediction when the system determines that the vehicle is in the vicinity of a guard rail. In some embodiments, this lane prediction condition may serve to prevent the system from erroneously determining that one or more edges detected in the one or more images correspond to a lane

constraint, when in reality the one or more edges is associated with a guard rail or with a guard rail shadow. In some embodiments, a guard rail may cast a shadow onto a roadway, and an edge of the shadow on the roadway may be detected by the image analysis techniques used by the system. In some embodiments, the system may erroneously determine that the guard rail shadow is a marker of a lane constraint, and may cause the vehicle to travel in accordance with the guard rail shadow rather than with the actual lane constraint. In some embodiments, in order to prevent this error, the system may recognize that a guard rail is present in the vicinity of the vehicle, and may therefore engage in lane constraint prediction to predict the location of a lane constraint on the side of a lane with a guard rail, rather than attempting to recognize the lane constraint on that side of the lane and risking erroneously recognizing the guard rail shadow as a lane constraint.

[00180] In the example of FIGS. 10A and 10B, vehicle 200 (shown in FIG. 10B; not shown in FIG. 10A, as vehicle 200 constitutes the point of view in Fig 10A) is traveling on roadway 1000 in lane 1002, which has guard rail 1012 to the left side of lane 1002. In some embodiments, system 100 may analyze the one or more images to detect that guard rail 1012 is present in the vicinity of vehicle 200 on the left side of lane 1002. In some embodiments, the presence of guard rail 1012 may satisfy a lane prediction condition.

[00181] In some embodiments, determining that a guard rail is present in the vicinity of the vehicle comprises detecting, in the one or more images, a pattern created by posts supporting the guard rail. In some embodiments, the system may be configured to detect one or more patterns in the one or more images that is known or suspected to be indicative of the presence of a guard rail. One such pattern may, in some embodiments, be referred to as a “rapid dash” pattern, and may be present when the system detects in the one or more images a pattern of rapid successive dashes or rapid successive lines caused by the posts supporting a guard rail. In some embodiments, the system may be configured to detect any other suitable pattern or visual indicia known to be characteristic of the posts that support guard rails. In some embodiments, the system may detect a pattern of the posts of a guard rail, while in some embodiments

the system may alternatively or additionally detect a pattern of the shadows cast by the posts of a guard rail. In the example of FIGS. 10A and 10B, guard rail 1012 is supported by posts 1014 (shown in FIG. 10A; not visible from the overhead angle of FIG. 10B). In Figs 10A and 10B, posts 1014 are casting a shadow that falls onto roadway 1000 and into lane 1002. System 100 may detect the presence of a rapid dashed pattern or any other suitable pattern created in the multiple images by posts 1014 or their shadows, and this detection may be one manner in which system 100 determines that a guard rail is present in the vicinity of vehicle 200.

[00182] In some embodiments, system 100 may utilize depth information to identify a shape that is characteristic of a guard rail or of a portion of a guard rail. It would be appreciated that a painted line would have substantially no volume, and its height is virtually zero relative to the roadway surface, and so, depth information can be useful to distinguish between a lane marking and a guard rail.

[00183] In some embodiments, the one or more defined lane prediction conditions comprise that a guard rail is casting a shadow onto the roadway. In some embodiments, a lane prediction condition may be based on the detection by the system of a shadow of a guard rail, in place of or in addition to detection by the system of a guard rail itself. In some embodiments, a lane prediction condition may be satisfied if a guard rail shadow is detected anywhere in the vicinity of the vehicle; in some embodiments, a lane prediction condition may be satisfied if a shadow is detected as being cast from a guard rail in the direction of a lane or a roadway in or on which the vehicle is traveling; in some embodiments, a lane prediction condition may be satisfied if a shadow is detected as being cast from a guard rail onto a roadway or lane in which the vehicle is traveling.

[00184] In some embodiments, determining that a guard rail is casting a shadow onto the roadway may involve determining whether a predicted location of the sun comports with the location of a detected edge that is possible a guard rail shadow. For example, in some embodiments, the system may determine a position of the sun and an orientation of the sun with respect to the multiple images available to the system. These determinations as to the location of the sun and the orientation of the vehicle

may be made in accordance with various pieces of information including, for example, one or more of the multiple images, a location and/or orientation of the vehicle determined by a GPS, an orientation of the vehicle determined by a compass, and/or a time of day. The system may determine, based on the determined location of the sun and orientation of the vehicle that a shadow is predicted to be cast from a guard rail in a certain direction at a certain time.

[00185] In the example of FIGS. 10A and 10B, guard rail 1012 is casting shadow 1016 onto roadway 1000 and into lane 1002; shadow 1016 falling on roadway 1000 and in lane 1002 may be detected by system 100, and said detection may satisfy a lane prediction condition.

[00186] In some embodiments, the one or more defined lane prediction conditions comprise that multiple substantially parallel edges are detected, in the multiple images, on the roadway on one side of a lane on the roadway. In some embodiments, image analysis techniques applied by the system to the multiple images received may detect edges in one or more of the multiple images received; in some embodiments, the detection of edges may be used to recognize objects and markings in the environment around the vehicle. In some embodiments, the detection of edges in the multiple images may be used to recognize lane lines or markings or the edges or roadways, and to thereby determine the location of lane constraints. In some embodiments, including those in which a guard rail shadow is cast onto a roadway or lane in which the vehicle is traveling, the system may detect the edge of a guard rail shadow as an edge in the multiple images. In some other embodiments, other objects or markings may cause the system to detect multiple edges on the same side of one lane. In these embodiments, determination of which edge corresponds to the correct lane constraint may be difficult, slow, or unreliable. For this reason, it may be advantageous in some embodiments to refrain from attempting to determine, based on the multiple images, which of several detected edges corresponds to a lane constraint, and instead to simply predict the location of the lane constraint using lane constraint prediction when multiple edges are detected in the multiple images as discussed above. In the example of FIGS. 10A and 10B, system 100 detects, in the multiple images, three different edges on the left side of

lane 1002, indicated by the bolded lines marked 1004, 1005a, and 1005b. In the example of FIGS. 10A and 10B, as explained above, system 100 may determine that multiple edges are detected on the left side of lane 1002, and this detection may constitute a lane prediction condition.

[00187] In some embodiments, if it is determined, at block 1206, that one or more defined lane prediction conditions are not satisfied, then method 1200 may return to step 1202 and may continue to acquire additional images of the roadway as time progresses.

[00188] In some embodiments, if it is determined, at block 1206, that one or more defined lane prediction conditions are satisfied, then method 1200 may proceed to step 1208. At step 1208, in some embodiments, in accordance with a determination that one or more defined lane prediction conditions are satisfied, the system predicts the location of a second roadway lane constraint. In some embodiments, the system may predict a lane constraint on the opposite side (the vehicle being a reference as to direction of the opposite side) of a lane from a detected lane constraint. Thus, in some embodiments, if one lane constraint is recognizable from lane lines or other visible indicia in the received images, and lane prediction conditions such as any of the conditions discussed above are determined to be satisfied, then the system may predict the location of the second lane constraint on the opposite side of the lane from the first lane constraint.

[00189] In some embodiments, the predicted lane constraint may be predicted to extend for a predetermined distance along the roadway. In some embodiments, the predicted lane constraint may be predicted to be parallel to the recognized lane constraint opposite it. In some embodiments, the predicted lane constraint may be predicted to continue along the same angle, path, or location as the same lane constraint was previously detected by the system. In some embodiments, the predicted lane constraint may be predicted based on the location of another lane constraint, based on the location of other discernible features of a roadway, or based on the location of the vehicle associated with the system and/or on surrounding vehicles. In some embodiments, the predicted lane constraint may be predicted as being located a predetermined distance from a recognized lane constraint or from any other object

recognized or predicted based on the multiple images of the roadway. In some embodiments, the predicted lane constraint may be predicted to be a lane constraint type that matches or is determined in accordance with other lane constraint types detected in the multiple images, or determined in accordance with a lane constraint type determined for the predicted lane constraint based on previous images of the roadway from a previous time (e.g., if a system detects a solid single white line on the right side of the vehicle, then ceases to detect any lane line, the system may predict that a solid single white lane constraint continues on the right side of the vehicle; alternately or additionally, a system may predict that a solid single white line is located on the opposite side of a lane from a solid single yellow line).

[00190] In the example of FIGS. 8A-8C, system 100 recognizes lane constraint 804 based on the detection of lane line 803a in the multiple images. When vehicle 200 reaches its position in FIG. 8B and does not detect any lane lines on the right side of lane 802, then a lane prediction condition may be satisfied. Accordingly, in some embodiments, system 100 may predict lane constraint 806 on the right side of lane 802, as shown in FIG. 8B. In some embodiments, lane constraint 806 may be predicted as a single dashed line lane constraint, based on the previous recognition, in FIG. 8A based on lane lines 803b, of lane constraint 806 as a single dashed line lane constraint. In some embodiments, the position, angle, type, and/or any other characteristic of lane constraint 806 may be predicted based on any stored or otherwise determined information accessible by system 100 about vehicle 200, roadway 800, or any other surrounding environmental factors.

[00191] In some embodiments, predicting the location of a lane constraint comprises predicting a width of a lane based on information about a previously determined width of the lane. In some embodiments, a width of a lane may be predicted based on historical information about lane width or cached information about the width of a specific lane in the recent past (e.g., a few seconds before lane constraint prediction was performed). In some embodiments, when a system is detecting both constraints of a lane and may thereby determine the width of that lane, and the system then ceases to detect or recognize one of the lane constraints, then the system may predict that the lane

continues to be the same width. The system may accordingly predict the location of the predicted lane constraint such that the lane is predicted to remain constant or substantially constant in width. In the example of FIGS. 8A-8C, when system 100 is predicting the location of lane constraint 806 in FIG. 8B, constraint 806 is predicted as being a distance 812 from lane constraint 804. This distance 812 may be the same distance 812 that was detected between lane constraint 806 and lane constraint 804 when vehicle 200 was in the position shown in FIG. 8A. System 100 may, in some embodiments, log or cache historical information about lane width, such that it can quickly recall lane width information in order to predict the location of a predicted lane constraint.

[00192] At step 1210, in some embodiments, the system enables the moving vehicle to avoid the first roadway lane constraint and the second roadway lane constraint. Thus, in some embodiments, the system may cause the vehicle to travel in a lane defined on one side by a detected/recognized lane constraint and on the opposite side by a predicted lane constraint. In some embodiments, the system may cause any suitable steering, accelerating, decelerating, or other control of the vehicle to cause it to travel within the lane defined by the predicted and detected lane constraints. In the example of FIGS. 8A-8C, when system 100 detects lane constraint 806 in FIG. 8B, system 100 then causes vehicle 200 to travel along lane 802 between detected lane constraint 804 and predicted lane constraint 806 to travel from its position in FIG. 8B to its position in FIG. 8C.

[00193] At step 1212, in some embodiments, the system determines whether one or more defined lane prediction cancellation conditions are satisfied. In some embodiments, a lane prediction cancellation condition may be any predetermined condition by which the system may determine whether to cease predicting the location of a lane constraint. In some embodiments, the location of a lane constraint may continue to be predicted once the system begins predicting the location of the lane constraint until one or more predefined lane prediction cancellation conditions are satisfied. In some embodiments, only one lane prediction cancellation condition need be satisfied in order for lane prediction to cease. In some embodiments, a predefined

number or lane prediction conditions greater than one must be satisfied in order for lane prediction to be ceased. Optionally, a confidence score may be assigned to a lane prediction condition according to predefined criteria. Optionally, some lane prediction condition can have a greater weight than others. Still further by way of example, an overall score can be computed to determine whether a lane prediction cancellation condition is met, and such a calculation can take into account confidence scores and weights which were assigned to lane prediction conditions.

[00194] In some embodiments, the one or more defined lane prediction cancellation conditions comprise that, after ceasing to be recognized, the second lane constraint is recognized based on the one or more images. For example, in some embodiments, as the vehicle is traveling along a roadway, a lane constraint may cease to be recognized (as discussed above), such as when a roadway is unmarked or lane lines are not detectable in the multiple images; lane prediction may be accordingly performed, as discussed above. In some embodiments, thereafter, for example as the vehicle continues to travel along the roadway, the system may once again recognize the lane constraint in the multiple images as the system continues to acquire new images. For example, if a vehicle reaches a portion of the roadway where the lane lines are no longer missing, or if the lane lines otherwise become detectable by the system once more, the system may recognize the lane constraint based on the updated images of the roadway. This recognition of the second lane constraint – the lane constraint that was being predicted – may in some embodiments constitute a lane prediction cancellation condition that may cause the system to cease to predict the location of the second lane constraint and to instead return to reliance on the detected/recognized location of the lane constraint based on the multiple images.

[00195] In the example of FIGS. 8A-8C, while system 100 may be predicting the location of lane constraint 806 when vehicle 200 is located at the position shown in FIG. 8B, as vehicle 200 continues to the position shown in FIG. 8C, the dashed lane lines 803b on the upper half of the diagram may once again be visible in the images acquired by system 100. Based on these new images, system 100 may once again detect/recognize the presence of lane constraint 806 based on lane line 803b, and this

recognition may constitute a lane prediction cancellation condition that triggers the cessation of the prediction of the location of lane constraint 806.

[00196] In some embodiments, the one or more defined lane prediction cancellation conditions comprise that a driver is moving the vehicle between lanes. In some embodiments, the system may determine based on the multiple images that the driver is steering or merging the vehicle to another lane. In some embodiments, this detection may satisfy a lane prediction cancellation condition and may trigger the cessation of lane constraint location prediction.

[00197] In some embodiments, the one or more defined lane prediction cancellation conditions comprise that the vehicle is traversing a curve that exceeds a predefined sharpness threshold. In some embodiments, the system may access a predefined or dynamically determined (e.g., determined in accordance with vehicle speed, posted speed limit, road conditions, weather conditions, environment brightness, the vicinity of other vehicles, etc.) sharpness threshold for curves, and may determine whether a curve in a roadway or a lane exceeds the sharpness threshold (e.g., is sharper than the maximum permissible sharpness). If it is determined that a curve being traversed or approached by the vehicle exceeds the maximum permissible sharpness, then the system may determine that a lane prediction cancellation condition is satisfied, and may accordingly cease lane constraint prediction.

[00198] In some embodiments, determining whether one or more defined lane prediction cancellation conditions are satisfied comprises selecting a maximum lane prediction distance setting, and determining whether a distance traveled by the vehicle while predicting the location of the second roadway lane constraint is greater than a maximum lane prediction distance associated with the maximum lane prediction distance setting. In some embodiments, a maximum lane prediction distance may be predefined, set, or dynamically determined by the system. In some embodiments, the system may monitor the distance traveled by the vehicle while the system is predicting the location of a lane constraint, and may cease to predict the location of the lane constraint if the distance traveled exceeds the maximum permissible lane prediction distance. In some embodiments, implementation of a maximum permissible lane

prediction distance may improve safety and functionality by ensuring that the system does not predict the location of a lane constraint for an overly-long period of time or over an overly-long distance, over which distance or time one or more characteristics of the lane or the roadway may change or vary. As characteristics of lanes and roadways can be expected, in some embodiments, to change or vary over space and time, the system may improve safety by ensuring that lane constraint reference points or indicators, such as lane lines or other lane markers, are detected based on the multiple images acquired by the system at least once over a maximum lane prediction distance (or, in some embodiments, a maximum lane prediction time).

[00199] In some embodiments, the maximum lane prediction distance may be varied by the system in different situations. In some embodiments, a maximum lane prediction distance may be associated with one or more maximum lane prediction distance settings, such that the system may select one maximum lane prediction distance setting and implement the associated maximum lane prediction distance. In some embodiments, different maximum lane prediction distance settings may be implemented in different driving scenarios, as detected and determined by the system.

[00200] In some embodiments, a standard or default maximum lane prediction distance setting may be associated with a standard or default maximum lane prediction distance. In some embodiments, the standard or default maximum lane prediction distance may be 18 meters.

[00201] In the example of Figs 8A-8C, vehicle 200 has traveled distance 814 from its position in FIG. 8B, at which point lane constraint prediction was commenced, to its position in FIG. 8C, at which point lane prediction is ceased. This distance 814 may be less than a standard or default maximum lane prediction distance of 18 meters, such that lane constraint prediction may have been performed continuously between the positions of vehicle 200 in FIGS. 8B and 8C.

[00202] In some embodiments, selecting a maximum lane prediction distance setting comprises, in accordance with a determination that a first lane is merging with a second lane in the vicinity of the vehicle, selecting a maximum lane prediction distance setting such that the maximum lane prediction distance is greater than a default maximum lane

prediction distance. In some embodiments, the system may thus implement an extended or increased maximum lane prediction distance. For example, in some embodiments, the system may determine, based on the multiple images, that a lane is merging with the lane in which the vehicle is traveling, or that the lane in which the vehicle is traveling is merging with another lane. The system may determine that a lane merge is occurring in the vicinity of the vehicle by detecting a lane constraint (e.g., by recognizing a lane line) on the far side of the merging lane adjacent to the vehicle's lane, and by determining that the lane constraint on the opposite side of the adjacent lane is approaching the lane in which the vehicle is traveling at above a predefined or dynamically determined threshold rate of approach. That is, in some embodiments, the system may recognize the far side of an adjacent lane approaching the lane in which the vehicle is traveling as the vehicle progresses along a roadway, and may accordingly determine that the adjacent lane is merging with the lane in which the vehicle is traveling.

[00203] In some embodiments, roadways may be expected to feature long distances of unmarked lane constraints when two lanes are merging with one another, so it may be advantageous for the system to be configured to predict the location of a lane constraint for a greater distance and/or a greater time than a default maximum lane prediction distance or time. In some embodiments, the increased maximum lane prediction distance associated with lane merge situations may be 1000 meters.

[00204] In the example of FIGS. 9A-9C, vehicle 200 has traveled distance 914 from its position in FIG. 9B, at which point lane constraint prediction was commenced, to its position in FIG. 9C, at which point lane prediction is ceased. This distance 914 may be greater than a standard or default maximum lane prediction distance, such that lane constraint prediction may have been ceased before vehicle 200 reached its position in FIG. 9C if the default maximum lane prediction distance setting was selected. However, as indicated by the bolded line in FIG. 8B, system 100 recognized lane constraint 922 on the right side of lane 916 approaching lane 902 as vehicle 200 progressed, and may have accordingly determined that the lanes were merging and that a maximum lane prediction distance setting associated with lane merges should be selected. The

selected setting may be associated with a maximum lane prediction distance of 1000 meters, greater than the default maximum lane prediction distance of 18 meters. Thus, in some embodiments, distance 914 may be less than the increased maximum lane prediction distance of 1000 meters, such that lane constraint prediction may have been performed continuously between the positions of vehicle 200 in FIGS. 9B and 9C.

[00205] In some embodiments, selecting a maximum lane prediction distance setting comprises, in accordance with a determination that defined guard-rail conditions are satisfied, selecting a maximum lane prediction distance setting having no maximum lane prediction distance. That is, in some embodiments, when system 100 detects that guard-rail conditions are satisfied, system 100 may predict the location of a lane constraint indefinitely, without regard for any maximum lane prediction distance. In this way, in some embodiments, the maximum lane prediction distance associated with guard-rail conditions may be thought of as an infinite maximum distance, or as a non-existent maximum distance.

[00206] In some embodiments, guard-rail conditions may be satisfied in any situation where the system detects the presence of one or more guard rails, guard rail supports, and/or guard rail shadows in the vicinity of the vehicle. For example, guard-rail conditions may be satisfied in any or all of the situations discussed above in which the system may determine that a guard rail and/or a guard rail shadow are present in the vicinity of the vehicle and/or on a roadway or lane in which the vehicle is traveling. In some situations, guard-rail conditions may be satisfied when the presence, location, and/or orientation of a guard rail and/or guard rail shadow causes the system to engage in lane constraint prediction, as discussed above.

[00207] In some embodiments, it may be advantageous for no maximum lane prediction distance (or an infinite maximum lane prediction distance) to be applied in situations in which a guard rail and/or guard-rail shadow is present, because guard rails and their associated shadows can be expected to persist continuously for very long distances along roadways (often greater than a default maximum lane prediction distance or even an increased lane prediction distance associated with lane merges). In the example of FIGS. 10A and 10B, when system 100 begins predicting the location

of lane constraint 1004 due to the detection of guard rail shadow 1016, system 100 may select a maximum lane prediction distance setting associated with guard rail conditions; the selection of a maximum lane prediction distance setting associated with guard rail conditions may cause the system to perform lane prediction of lane constraint 1004 without being subject to any maximum lane prediction distance.

[00208] In some embodiments, if it is determined, at block 1212, that one or more defined lane prediction cancellation conditions are not satisfied, then method 1200 may return to step 1202 and may continue to acquire additional images of the roadway as time progresses.

[00209] In some embodiments, if it is determined, at block 1212, that one or more defined lane prediction cancellation conditions are satisfied, then method 1200 may proceed to step 1214. At step 1212, in some embodiments, in accordance with a determination that one or more lane prediction cancellation conditions are satisfied, the system ceases to predict the location of the second lane constraint. In the example of FIGS. 8A-8C, when vehicle 200 reaches its position depicted in FIG. 8C, a lane prediction cancellation condition may be satisfied by the recognition of lane constraint 806 based on lane line 803b, and system 100 may therefore cease to predict the location of lane constraint 806. Instead, system 100 may resume determining the position of lane constraint 806 based on the detected location of lane line 803b, as it did previously in FIG. 8A.

[00210] Construction Zone Detection and Response

[00211] System 100 may provide vehicle 200 with construction zone detection, such that the system recognizes the presence of construction zones on roadways and takes action in accordance therewith. In some embodiments, system 100 may recognize various elements in the one or more images that it receives and may determine, in accordance with the recognition of those one or more elements, that vehicle 200 is approaching or inside a construction zone. In some embodiments, any automated or driver-assist action may be taken in accordance with the detection of a construction zone, including but not limited to changing the speed of vehicle 200, steering vehicle 200, engaging or disengaging one or more lights of vehicle 200, etc. In some

embodiments, in accordance with the detection of a construction zone, a signal may be outputted by system 100 that indicates that a construction zone has been detected and/or that a construction zone mode is activated. In some embodiments, in accordance with the detection of a construction zone (and/or in accordance with the detection of a complex construction zone), automated or driver-assist control of vehicle 200 by system 100 may be disabled, such that control of vehicle 200 may be returned to the driver.

[00212] FIG. 13 illustrates an embodiment in which vehicle 200 is traveling on roadway 1300 and approaching a construction zone. Roadway 1300 has two lanes 1302 and 1304. Lane 1302 is defined by lane constraints 1306 and 1308, while lane 1304 is defined by lane constraints 1310 and 1312. These lane constraints are detected by system 100, as shown by the bolded lines indicating lane constraints 1306, 1308, 1310, and 1312. Lane constraints 1306 and 1308 are marked on roadway 1300 by painted lane lines 1320 and 1322, respectively; while lane constraints 1310 and 1312 are marked by on roadway 1300 by painted lane lines 1322 and 1324, respectively.

[00213] Roadway 1300 includes several indicators of a construction zone or construction area, including painted construction zone lane line 1326. In some embodiments, construction zone lane lines may be painted in a different color and/or different style than conventional lane lines. For example, in Germany, yellow lane lines are painted on the road to indicate a construction zone, while conventional lane lines are painted in white. As indicated by the bolded line, system 100 detects construction zone lane constraint 1314 based on painted construction zone lane line 1326. In accordance with the detection of construction zone lane constraint 1314, system 100 may cause vehicle 200 to drive within the lane defined by construction zone lane constraint 1314 rather than the conventional lane constraints. In some embodiments, when system 100 has detected that vehicle 200 is in a construction zone, construction zone lane lines may be given precedence over conventional lane lines.

[00214] Roadway 1300 may include additional construction zone indicators, including cones 1316, some of which are located on the surface of roadway 1300 and inside lane 1304. In response to detecting cones 1316, system 100 may cause vehicle 200 to alter

its path so as to avoid cones 1316, changing a position in a lane of travel or changing lanes if necessary. In response to detecting cones 1316, system 100 may determine that vehicle 200 is in or near a construction zone; activate a construction zone mode; output a construction zone signal; disable automated or driver-assist control of vehicle 200; and/or control vehicle 200 by changing its speed, steering it, or taking any other appropriate action (such as to avoid cones 1316).

[00215] Roadway 1300 may include additional construction zone indicators, including construction road signs 1318a and 1318b, which may indicate the presence of a construction zone and/or indicate an instruction for drivers to follow while in the construction zone (e.g., slow, stop, merge, turn, etc.). System 100 may detect construction road signs 1318a and 1318b through the manner in which the system may detect any or all other traffic signs, and may take any appropriate action in response to detection of construction road signs 1318a and 1318b, including determining that vehicle 200 is in or near a construction zone; activating a construction zone mode; outputting a construction zone signal; disabling automated or driver-assist control of vehicle 200; and/or controlling vehicle 200 by changing its speed, steering it, or taking any other appropriate action (such as in accordance with an instruction on a construction road sign).

[00216] FIG. 14 is an exemplary block diagram of memory 140 or 150, which may store instructions for performing one or more operations consistent with disclosed embodiments. As illustrated in FIG. 14, memory 140 or 150 may store one or more modules for performing construction-zone detection as described herein. For example, memory 140 or 150 may store image obtaining module 1400, construction zone indicator recognizing module 1402, determining module 1404, signal outputting module 1406, vehicle moving enabling module 1408, and vehicle control disabling module 1410. As would be appreciated by a person of ordinary skill in the art, any of the previously recited modules may be combined with each other or with other modules, interfaced with one another or with other modules, and/or subdivided into further modules and/or sub-modules.

[00217] In some embodiments, processing unit 110 may execute instructions stored on the one or more modules in memory 140 or 150, and the execution by processing unit 110 may cause system 100 to perform the methods discussed herein.

[00218] In some embodiments, processing unit 110 may cause system 100 to obtain (e.g., with image obtaining module 1400) multiple images from a camera (e.g., image capture devices 122, 124, and/or 126), wherein the camera is adapted to capture, when mounted on a vehicle (e.g., vehicle 200), and while the vehicle is in motion, images of a roadway within a field of view of the camera, apply image processing to the multiple images to recognize (e.g., with construction zone indicator recognizing module 1402) one or more indicators of a construction zone, and, in accordance with recognizing the one or more indicators of a construction zone, output (e.g., with signal outputting module 1406) a signal indicating that the vehicle is proximate to a construction zone.

[00219] In some embodiments, processing unit 110 may cause system 100 to determine (e.g., with determining module 1404), based on the one or more indicators, that the vehicle is proximate to a construction zone, and in accordance with a determination that the vehicle is proximate to a construction zone, output (e.g., with signal outputting module 1406) the signal indicating that the vehicle is proximate to a construction zone.

[00220] In some embodiments processing unit 110 may cause system 100 to, in accordance with the determination that the vehicle is proximate to a construction zone, cause the moving vehicle (e.g., with vehicle moving enabling module 1408) to move in accordance with the construction zone indicators.

[00221] In some embodiments processing unit 110 may cause system 100 to determine (e.g., with determining module 1404), based on the one or more indicators, that the construction zone is a complex construction zone, and in accordance with a determination that the construction zone is a complex construction zone, disable (e.g., with vehicle control disabling module) automated vehicle control functionality.

[00222] FIG. 15 illustrates a process 1500 for implementing lane constraint prediction consistent with the disclosed embodiments. In some embodiments, the steps in process 1500 may be illustrated by the situations illustrated in FIG. 13. According to

some embodiments, process 1500 may be implemented by one or more components of navigation system 100, such as at least one processing unit 110. According to some embodiments, process 1500 may be implemented by a system 100 associated with a vehicle 200.

[00223] At step 1502, in some embodiments, a system receives multiple images of a roadway in the vicinity of a moving vehicle associated with the system. In some embodiments, the one or more images are acquired using at least one image capture device, such as image capture devices 122, 124, and/or 126. The plurality of images may be received by the system through a data interface such as data interface 128. In the example illustrated in FIG. 13, system 100 may acquire a plurality of images of roadway 1300 in the vicinity of vehicle 200.

[00224] At step 1504, in some embodiments, the system recognizes, in the multiple images, one or more indicators of a construction zone. In some embodiments, the system may use image analysis techniques to process the one or more images received to detect signs, objects, other vehicles, marked lane lines, and any other objects or characteristics of a surrounding environment. In some embodiments, certain signs, markings, lane lines, objects, and/or combinations of any such detected aspects may be predetermined by the system to be indicators of a construction zone. In some embodiments, cones, barrels, flashing lights, poles, barriers, and/or markers present in the vicinity of the roadway may be predetermined by the system to be indicators of a construction zone. In some embodiments, predefined traffic signs, such as those bearing text, symbols, or images known to indicate a construction zone, may be predetermined by the system to be indicators of a construction zone. In some embodiments, lane lines may be determined by the system to be indicators of a construction zone. For example, in Germany, construction zones may be marked with special construction zone lane lines painted on roadways, the construction zone lane lines possibly being of a different color or a different appearance than conventional lane lines. The system may detect lane lines of a color, appearance, orientation, and/or location that indicates to the system that the lines are construction zone lane lines, and

the system may recognize such construction zone lane lines as indicators of a construction zone.

[00225] In the example of FIG. 13, system 100 may recognize cones 1316, construction road signs 1318a and 1318b, and/or painted construction zone lane line 1326. In some embodiments, any or all of those elements may be predetermined by system 100, or dynamically determined by system 100, to be construction zone indicators.

[00226] At step 1506, in some embodiments, the system determines, based on the one or more indicators, whether the vehicle is proximate to a construction zone. In some embodiments, a system may determine based on the proximity (to the vehicle, roadway, or lane) of construction zone indicators that the vehicle is proximate to a construction zone. In some embodiments, a system may assume based on the orientation or placement with respect to a roadway or a lane that the vehicle is proximate to a construction zone. In some embodiments, a system may determine from the content (e.g., the images, symbols, and/or text) of one or more road signs that the vehicle is proximate to a construction zone. In some embodiments, a minimum threshold number of construction zone indicators must be detected within a maximum threshold time of one another in order for a system to determine that the vehicle is proximate to a construction zone. In the example of FIG. 13, system 100 may determine based on the simultaneous detection of cones 1316, construction road signs 1318a and 1318b, and/or painted construction zone lane line 1326 that vehicle 200 is proximate to a construction zone.

[00227] In some embodiments, if it is determined, at block 1506, that the vehicle is not proximate to a construction zone, then method 1500 may return to step 1502 and may continue to acquire additional images of the roadway as time progresses.

[00228] In some embodiments, if it is determined, at block 1506, that the vehicle is proximate to a construction zone, then method 1500 may proceed to step 1508. At step 1508, in some embodiments, in accordance with a determination that the vehicle is proximate to a construction zone, the system outputs a signal indicating that the vehicle is proximate to a construction zone. In some embodiments, the signal output by system

100 may be an electronic signal or an electronic message that communicates to any component of the system or to any associated system that a construction zone is detected. For example, a signal may be sent to a display system associated with the system, or a signal may be sent to any other local or remote system communicatively coupled with the system. In some embodiments, the signal may be perceptible by a driver of the vehicle. For example, the signal may be a visible signal (such as a lighted indicator or a displayed element on a computer or entertainment system display), an audible signal emitted by a speaker system, and/or a haptic signal such as a vibration.

[00229] At step 1510, in some embodiments, in accordance with the determination that the vehicle is proximate to a construction zone, the system enables the moving vehicle to move in accordance with the construction zone indicators. In some embodiments, in response to determining that the vehicle is proximate to a construction zone, the system may cause the vehicle to be accelerated, decelerated, steered, or otherwise controlled and moved in accordance with the detected construction zone indicators. In some embodiments, the vehicle may be automatically slowed to a reduced speed to increase safety. In some embodiments, the vehicle may be steered or caused to change lanes so as to follow construction zone lane lines, avoid cones/barrels/poles/barriers or other construction zone indicators, or follow instructions indicated on road signs indicating or associated with the construction zone. In the example of FIG. 13, system 100 may modify a course of travel of vehicle 200 such that vehicle 200 follows detected lane constraint 1314 in accordance with construction zone lane line 1326 (rather than lane constraint 1312 detected in accordance with lane line 1324), avoids cones 1316, and obeys traffic sign 1318b (which includes a symbol instructing vehicle 200 to merge left). In some embodiments, vehicle 200 may be caused to accordingly merge from lane 1304 left into lane 1302.

[00230] At step 1512, in some embodiments, the system determines, based on the one or more indicators, whether the construction zone is a complex construction zone. In some embodiments, a complex construction zone may be a construction zone having one or more predefined or dynamically determined characteristics associated by the system with a construction zone in which autonomous and/or driver-assist control of a

vehicle may be unsafe, in which autonomous and/or driver assist control of a vehicle may be unreliable or undependable, or in which control of a vehicle should be returned to a driver of the vehicle. In some embodiments, a complex construction zone may be a construction zone where an obstruction exists in a lane or on a roadway on or in which the vehicle is traveling. In some embodiments, a complex construction zone may be a construction zone in which a predefined or dynamically determined threshold number of cones/barrels/poles/barriers or other construction zone indicators are detected within a threshold distance or threshold time of one another. That is, in some embodiments, when a construction zone is densely populated with construction zone indicators, it may be determined to be a complex construction zone. In the example of Fig 13, in some embodiments, roadway 1300 may be determined by system 100 to contain a complex construction zone, based on the presence of cones 1316 on roadway 1300, cones 1316 in lane 1304, a minimum threshold number of cones 1316 being detected, and or a minimum threshold number of total construction zone indicators being detected.

[00231] In some embodiments, if it is determined, at block 1512, that the construction zone is not a complex construction zone, then method 1500 may return to step 1502 and may continue to acquire additional images of the roadway as time progresses.

[00232] In some embodiments, if it is determined, at block 1512, that the construction zone is a complex construction zone, then method 1500 may proceed to step 1514. At step 1514, in some embodiments, in accordance with a determination that the construction zone is a complex construction zone, the system may disable automated vehicle control functionality. In some embodiments, driver assist functionality may be disabled. In some embodiments, fully automated driving functionality may be disabled. In some embodiments, full control (e.g., acceleration, deceleration, steering, etc.) of vehicle 200 may be returned by system 100 to the driver of vehicle 200.

[00233] The foregoing description has been presented for purposes of illustration. It is not exhaustive and is not limited to the precise forms or embodiments disclosed. Modifications and adaptations will be apparent to those skilled in the art from consideration of the specification and practice of the disclosed embodiments. Additionally, although aspects of the disclosed embodiments are described as being

stored in memory, one skilled in the art will appreciate that these aspects can also be stored on other types of computer readable media, such as secondary storage devices, for example, hard disks or CD ROM, or other forms of RAM or ROM, USB media, DVD, Blu-ray, or other optical drive media.

[00234] Computer programs based on the written description and disclosed methods are within the skill of an experienced developer. The various programs or program modules can be created using any of the techniques known to one skilled in the art or can be designed in connection with existing software. For example, program sections or program modules can be designed in or by means of .Net Framework, .Net Compact Framework (and related languages, such as Visual Basic, C, etc.), Java, C++, Objective-C, HTML, HTML/AJAX combinations, XML, or HTML with included Java applets. Further, it is to be understood that the functionality of the program modules described herein is not limited to the particular type of program module named herein, but rather can be programmed in any suitable manner across among one or more modules or other software constructs.

[00235] Moreover, while illustrative embodiments have been described herein, the scope of any and all embodiments having equivalent elements, modifications, omissions, combinations (e.g., of aspects across various embodiments), adaptations and/or alterations as would be appreciated by those skilled in the art based on the present disclosure. The limitations in the claims are to be interpreted broadly based on the language employed in the claims and not limited to examples described in the present specification or during the prosecution of the application. The examples are to be construed as non-exclusive. Furthermore, the steps of the disclosed methods may be modified in any manner, including by reordering steps and/or inserting or deleting steps. It is intended, therefore, that the specification and examples be considered as illustrative only, with a true scope and spirit being indicated by the following claims and their full scope of equivalents.

What Is Claimed Is:

1. A device mountable on a vehicle, comprising:

a camera adapted to capture, when mounted on the vehicle, and while the vehicle is in motion, multiple images of a roadway within a field of view of the camera;

a processor configured to:

obtain the multiple images from the camera;

apply image processing to the multiple images to recognize a first roadway lane constraint appearing in at least one of the multiple images;

determine, based on the multiple images, that one or more defined lane prediction conditions are satisfied;

in accordance with a determination that one or more defined lane prediction conditions are satisfied, predict a location of a second roadway lane constraint;

issue a notification or a control signal to control a motion of the vehicle according to the predicted location of the second roadway lane constraint.

2. The device according to claim 1, wherein the processor is configured to issue a notification or a control signal to direct a motion of the vehicle according to a location of the first roadway lane constraint.

3. The device according to claim 1, wherein the processor is configured to issue a notification or a control signal to direct a motion of the vehicle along a lane or an area between the first roadway lane constraint and the second roadway lane constraint.

4. The device according to claim 1, wherein the processor is configured to issue a notification or a control signal for moving the vehicle issue a notification or a control signal to direct a motion of the vehicle to avoid the first roadway lane constraint and the second roadway lane constraint.

5. The device of claim 1, wherein the one or more defined lane prediction conditions comprise that the second roadway lane constraint ceases to be recognized, based on the multiple images, as the vehicle moves on the roadway.

6. The device of claim 1, wherein the one or more defined lane prediction conditions comprise that the first roadway lane constraint has been recognized for at least a threshold time or a threshold distance.

7. The device of claim 1, wherein the one or more defined lane prediction conditions comprise that a guard rail is present in the vicinity of the vehicle.

8. The device of claim 7, wherein determining that a guard rail is present in the vicinity of the vehicle comprises detecting, in the one or more images, a pattern created by posts supporting the guard rail.

9. The device of claim 7, wherein the one or more defined lane prediction conditions comprise that the guard rail is casting a shadow onto the roadway.

10. The device of claim 1, wherein the one or more defined lane prediction conditions comprise that multiple substantially parallel edges are detected, in the multiple images, on one side of a lane on the roadway.

11. The device of claim 1, wherein predicting the location of the second roadway lane constraint comprises accounting for a location of the first roadway lane constraint.

12. The device of claim 1, wherein predicting the location of the second roadway lane constraint comprises predicting a width of a lane based on information about a previously determined width of the lane.

13. The device of claim 1, wherein the processor is configured to:

determine whether one or more defined lane prediction cancellation conditions are satisfied, and

in accordance with a determination that one or more defined lane prediction cancellation conditions are satisfied, cease to predict the location of the second roadway lane constraint.

14. The device of claim 13, wherein the one or more defined lane prediction cancellation conditions comprise that, after ceasing to be recognized, the second roadway lane constraint is recognized based on the one or more images.

15. The device of claim 13, wherein the one or more defined lane prediction cancellation conditions comprise that a driver is moving the vehicle between lanes.

16. The device of claim 13, wherein the one or more defined lane prediction cancellation conditions comprise that the vehicle is traversing a curve that exceeds a predefined sharpness threshold.

17. The device of claim 13, wherein determining whether one or more defined lane prediction cancellation conditions are satisfied comprises:

selecting a maximum lane prediction distance setting, and

determining whether a distance traveled by the vehicle while predicting the location of the second roadway lane constraint is greater than a maximum lane prediction distance associated with the maximum lane prediction distance setting.

18. The device of claim 17, wherein selecting a maximum lane prediction distance setting comprises, in accordance with a determination that a first lane is merging with a second lane in the vicinity of the vehicle, selecting a maximum lane prediction distance setting such that the maximum lane prediction distance is greater than a default maximum lane prediction distance.

19. The device of claim 17, wherein selecting a maximum lane prediction distance setting comprises, in accordance with a determination that defined guard-rail conditions are satisfied, selecting a maximum lane prediction distance setting having no maximum lane prediction distance.

20. The device of claim 17, wherein selecting a maximum lane prediction distance setting comprises, in accordance with a determination that defined guard-rail

conditions are satisfied, selecting a maximum lane prediction distance setting such that the maximum lane prediction distance is greater than a default maximum lane prediction distance.

21. A computer system comprising:

a memory that stores instructions, and

a processor that executes the instructions to cause the system to:

obtain multiple images from a camera, the camera being adapted to capture, when mounted on the vehicle, and while the vehicle is in motion, images of the roadway within a field of view of the camera;

apply image processing to the multiple images to recognize a first roadway lane constraint appearing in at least one of the multiple images;

determine, based on the multiple images, that one or more defined lane prediction conditions are satisfied;

in accordance with a determination that one or more defined lane prediction conditions are satisfied, predict a location of a second roadway lane constraint;

issue a notification or a control signal to direct a motion of the vehicle according to the predicted location of the second roadway lane constraint.

22. A method comprising:

at a system comprising a memory that stores instructions and a processor that executes the instructions:

obtaining multiple images from a camera, the camera being adapted to capture, when mounted on a vehicle, and while the vehicle is in motion, images of a roadway within a field of view of the camera;

applying image processing to the multiple images to recognize a first roadway lane constraint appearing in at least one of the multiple images;

determining, based on the multiple images, that one or more defined lane prediction conditions are satisfied;

in accordance with a determination that one or more defined lane prediction conditions are satisfied, predicting a location of a second roadway lane constraint;

issuing a notification or a control signal to direct a motion of the vehicle according to the predicted location of the second roadway lane constraint.

23. A vehicle comprising:

a body;

a camera adapted to capture, when mounted on the vehicle, and while the vehicle is in motion, multiple images of a roadway within a field of view of the camera;

a processor configured to:

obtain the multiple images from the camera;

apply image processing to the multiple images to recognize a first roadway lane constraint appearing in at least one of the multiple images;

determine, based on the multiple images, that one or more defined lane prediction conditions are satisfied;

in accordance with a determination that one or more defined lane prediction conditions are satisfied, predict a location of a second roadway lane constraint;

issue a notification or a control signal to control a motion of the vehicle according to the predicted location of the second roadway lane constraint.

24. A device mountable on a vehicle, comprising:

a camera adapted to capture, when mounted on the vehicle, and while the vehicle is in motion, multiple images of a roadway within a field of view of the camera, and

a processor configured to:

obtain the multiple images from the camera;

apply image processing to the multiple images to recognize, in the multiple images, one or more indicators of a construction zone, and

in accordance with recognizing the one or more indicators of a construction zone, output a signal indicating that the vehicle is proximate to a construction zone.

25. The device of claim 24, wherein the processor is configured to:

determine, based on the one or more indicators, that the vehicle is proximate to a construction zone, and

in accordance with the determination that the vehicle is proximate to a construction zone, output the signal indicating that the vehicle is proximate to a construction zone.

26. The device of claim 24, wherein the output signal is perceptible by a driver of the vehicle.

27. The device of claim 24, wherein the output signal is a control signal that controls a motion of the vehicle.

28. The device of claim 24, wherein the one or more indicators of a construction zone comprise one of: cones present in the vicinity of the roadway, barrels present in the vicinity of the roadway, poles present in the vicinity of the roadway, and barriers present in the roadway.

29. The device of claim 24, wherein the one or more indicators of a construction zone comprise predefined traffic signs.

30. The device of claim 24, wherein the one or more indicators of a construction zone comprise construction zone lane lines.

31. The device of claim 24, wherein the instructions cause the system to:

in accordance with the determination that the vehicle is proximate to a construction zone, cause the moving vehicle to move in accordance with the construction zone indicators.

32. The device of claim 31, wherein causing the moving vehicle to move in accordance with the construction zone indicators comprises one of: causing reducing a speed of the vehicle; causing changing a lane in which the vehicle is traveling; enabling avoiding cones, barrels, poles, and/or barriers; and causing following construction zone lane constraints rather than conventional lane constraints.

33. The device of claim 24, wherein the instructions cause the system to:

determine, based on the one or more indicators, that the construction zone is a complex construction zone, and

in accordance with a determination that the construction zone is a complex construction zone, disable automated vehicle control functionality.

34. The device of claim 33, wherein the determination that the construction zone is a complex construction zone comprises the recognition of one of: cones present in a lane in which the vehicle is present, barrels present in a lane in which the vehicle is present, poles present in a lane in which the vehicle is present, and barriers present in a lane in which the vehicle is present.

35. The device of claim 33, wherein the determination that the construction zone is a complex construction zone comprises the recognition of a number of cones, barrels, poles, and/or barriers in the vicinity of the vehicle exceeding a predefined threshold number.

36. A computer system comprising:

a memory that stores instructions, and

a processor that executes the instructions to cause the system to:

obtain multiple images from a camera, the camera being adapted to capture, when mounted on the vehicle, and while the vehicle is in motion, images of the roadway within a field of view of the camera;

apply image processing to the multiple images to recognize, in the multiple images, one or more indicators of a construction zone, and

in accordance with recognizing the one or more indicators of a construction zone, output a signal indicating that the vehicle is proximate to a construction zone.

37. A method comprising:

at a system comprising a memory that stores instructions and a processor that executes the instructions:

obtaining multiple images from a camera, the camera being adapted to capture, when mounted on a vehicle, and while the vehicle is in motion, images of a roadway within a field of view of the camera;

applying image processing to the multiple images to recognize, in the multiple images, one or more indicators of a construction zone, and

in accordance with recognizing the one or more indicators of a construction zone, output a signal indicating that the vehicle is proximate to a construction zone.

38. A vehicle, comprising:

a body;

a camera adapted to capture, when mounted on the vehicle, and while the vehicle is in motion, multiple images of a roadway within a field of view of the camera, and

a processor configured to:

obtain the multiple images from the camera;

apply image processing to the multiple images to recognize, in the multiple images, one or more indicators of a construction zone, and

in accordance with recognizing the one or more indicators of a construction zone, output a signal indicating that the vehicle is proximate to a construction zone.

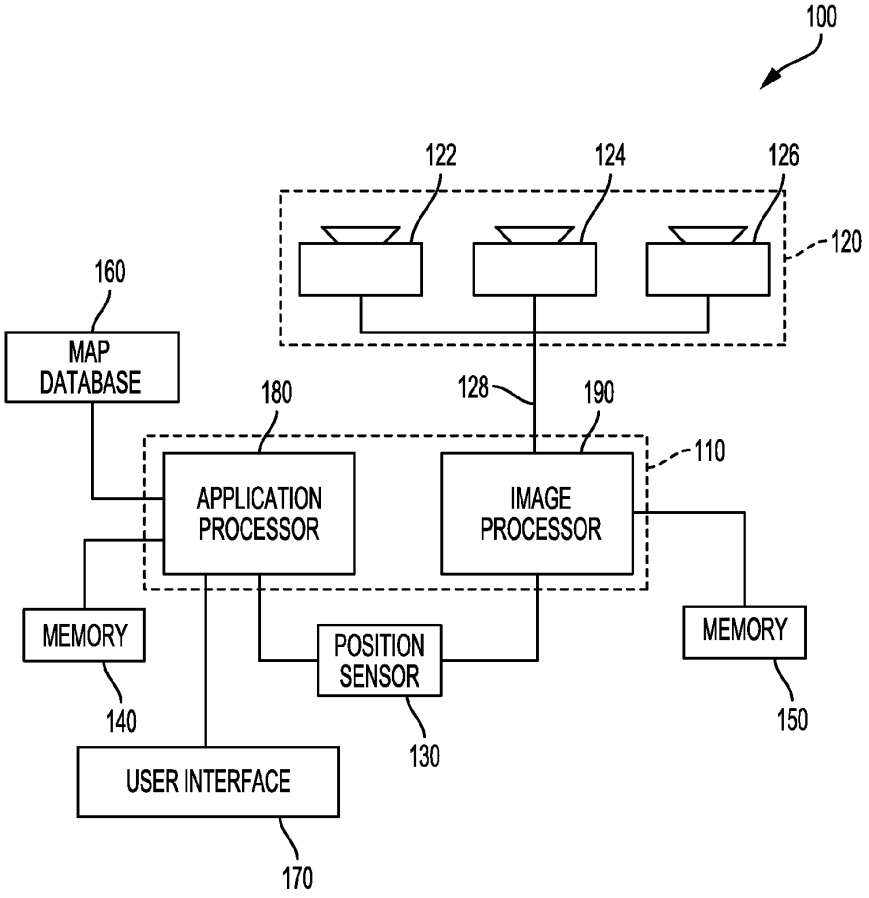
100
122
124
126
120
160
MAP DATABASE
180
128
190
110
APPLICATION PROCESSOR
IMAGE PROCESSOR
MEMORY
POSITION SENSOR
MEMORY
140
130
150
USER INTERFACE
170

FIG. 1

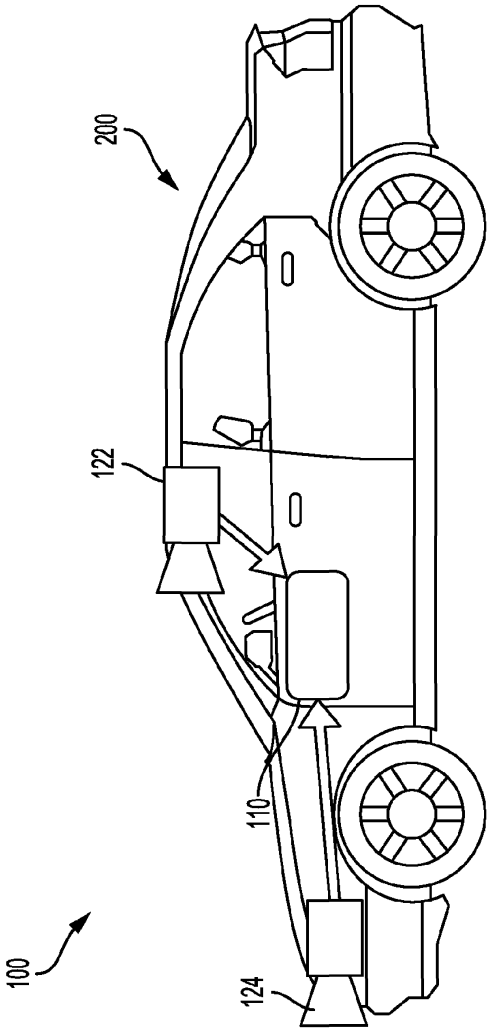

FIG. 2A

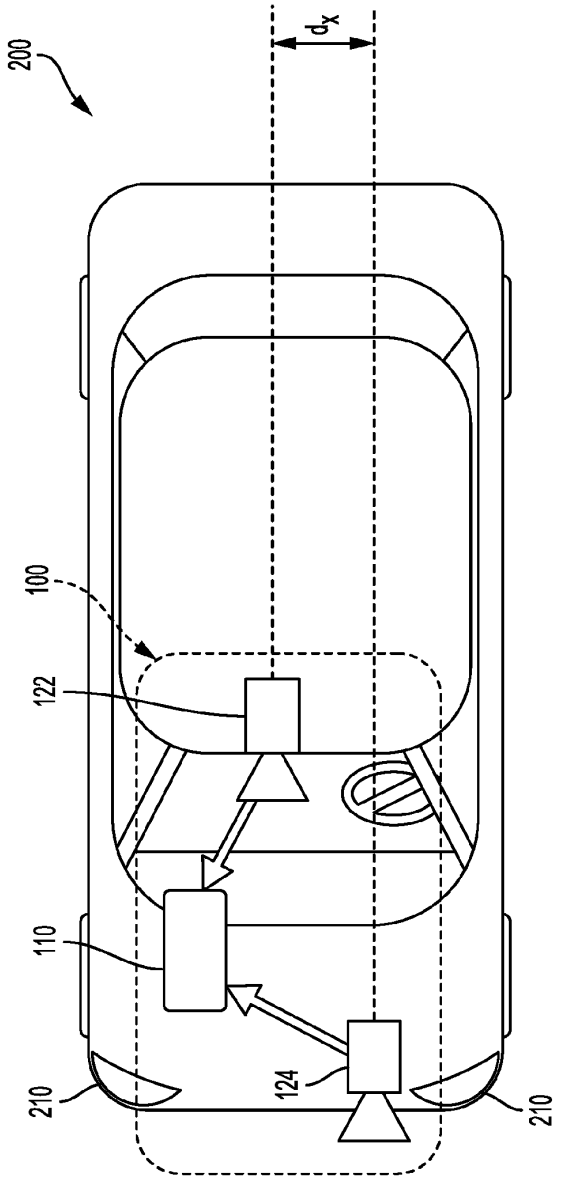

FIG. 2B

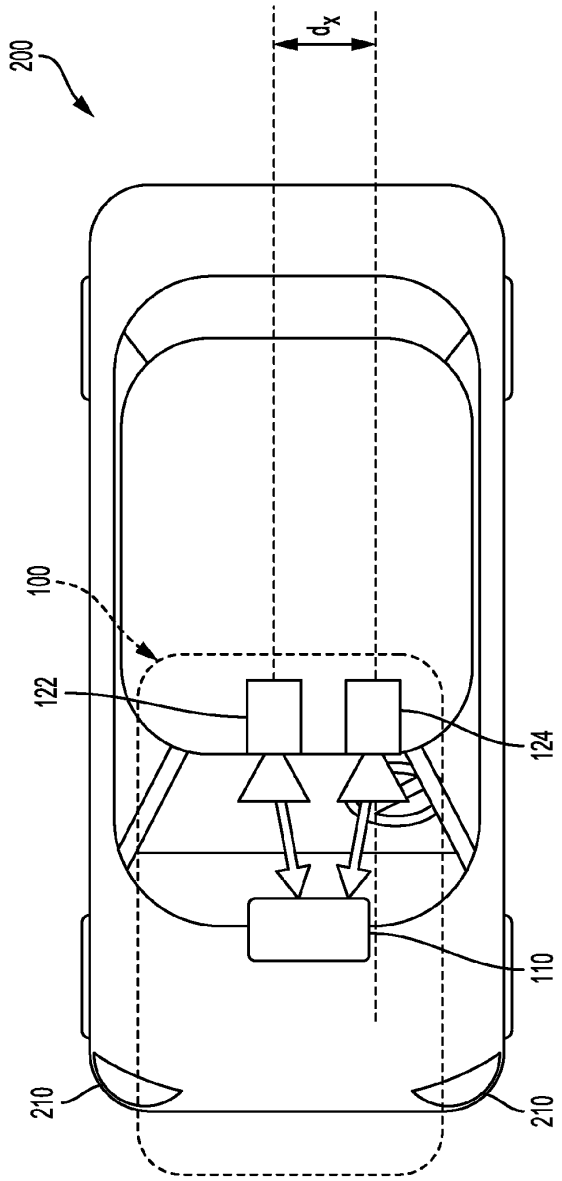

FIG. 2C

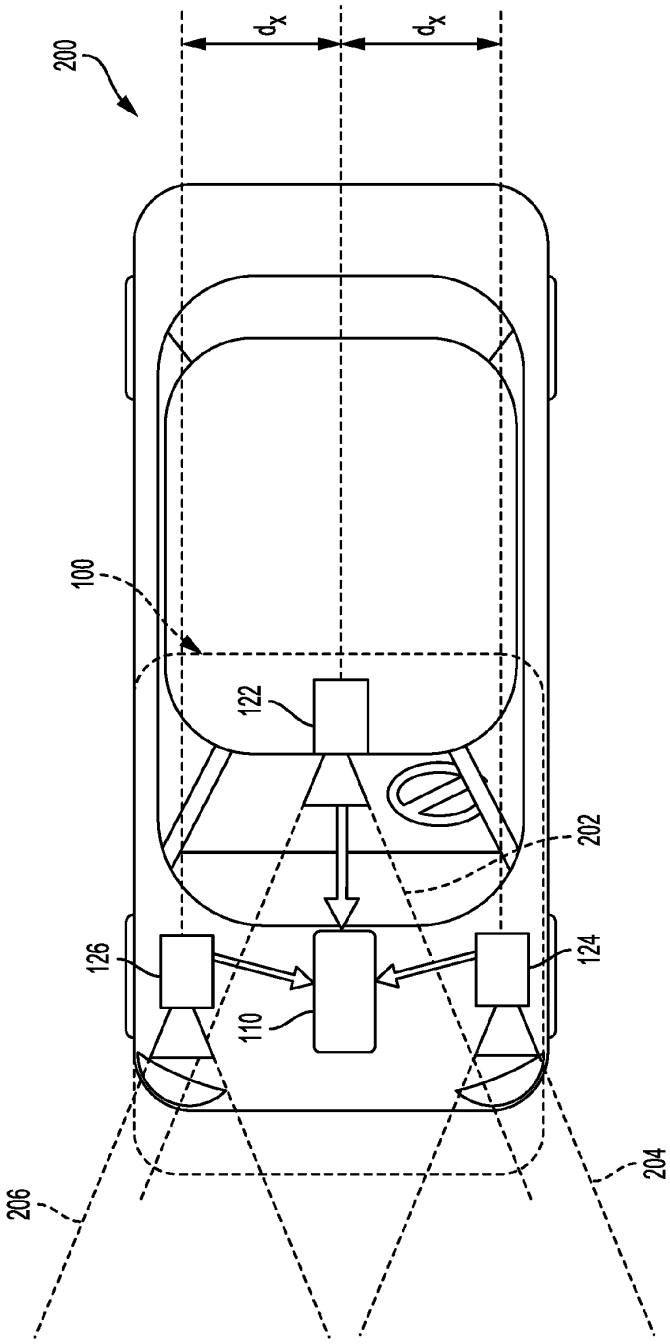

FIG. 2D

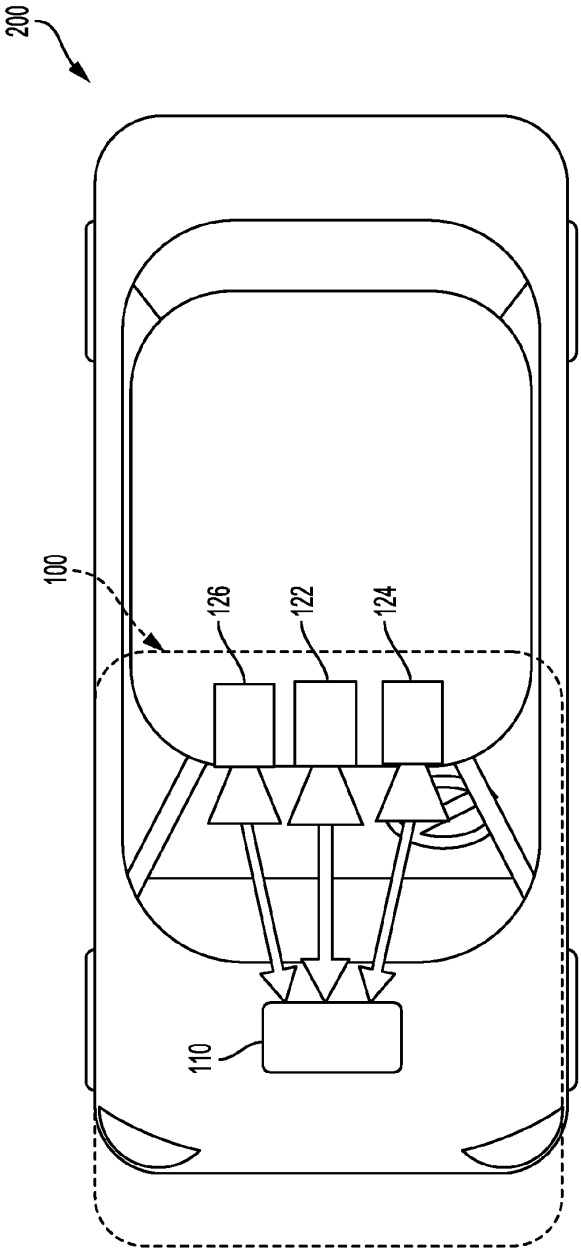

FIG. 2E

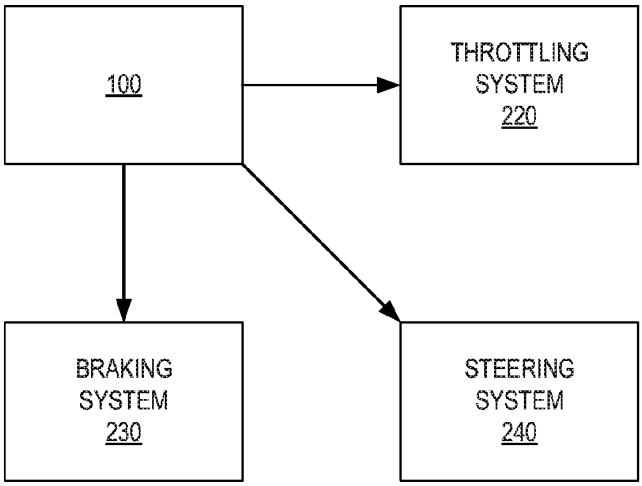
100
THROTTLING SYSTEM 220
BRAKING SYSTEM 230
STEERING SYSTEM 240

FIG. 2F

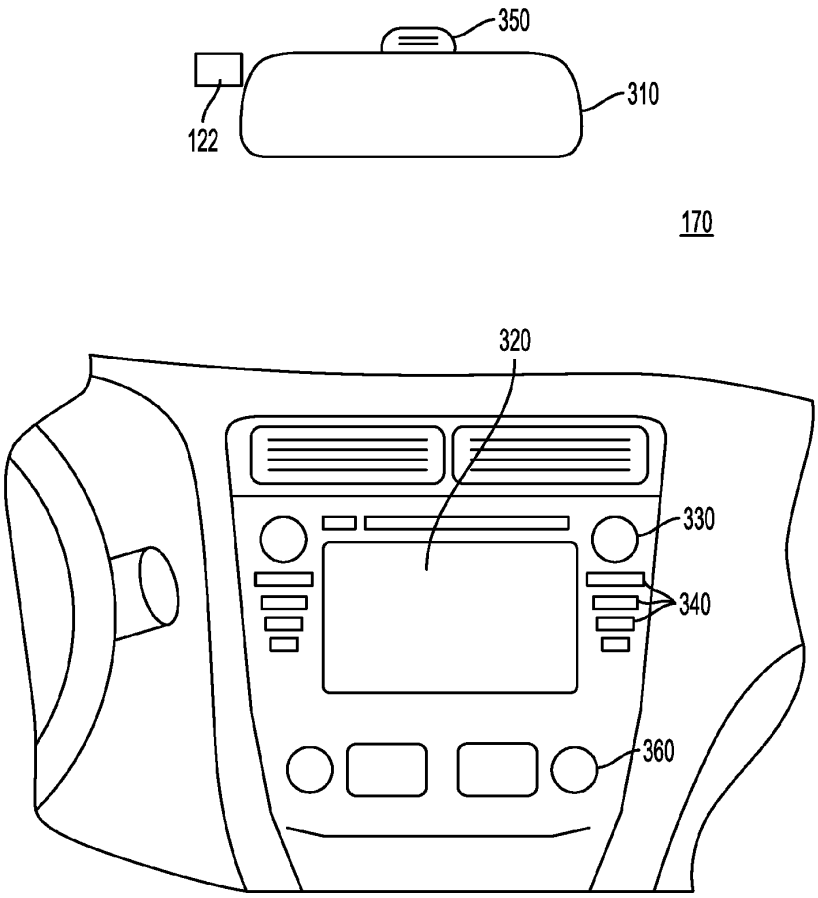

FIG. 3A

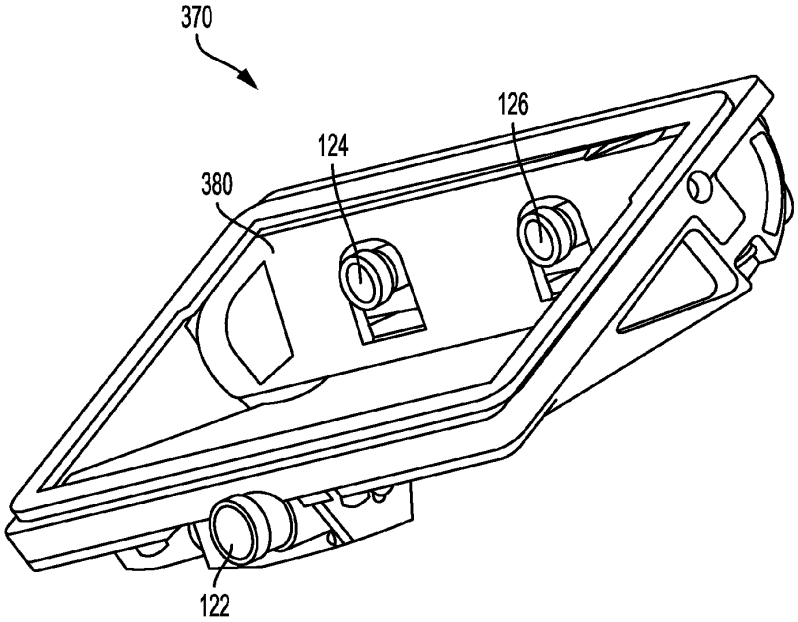

FIG. 3B

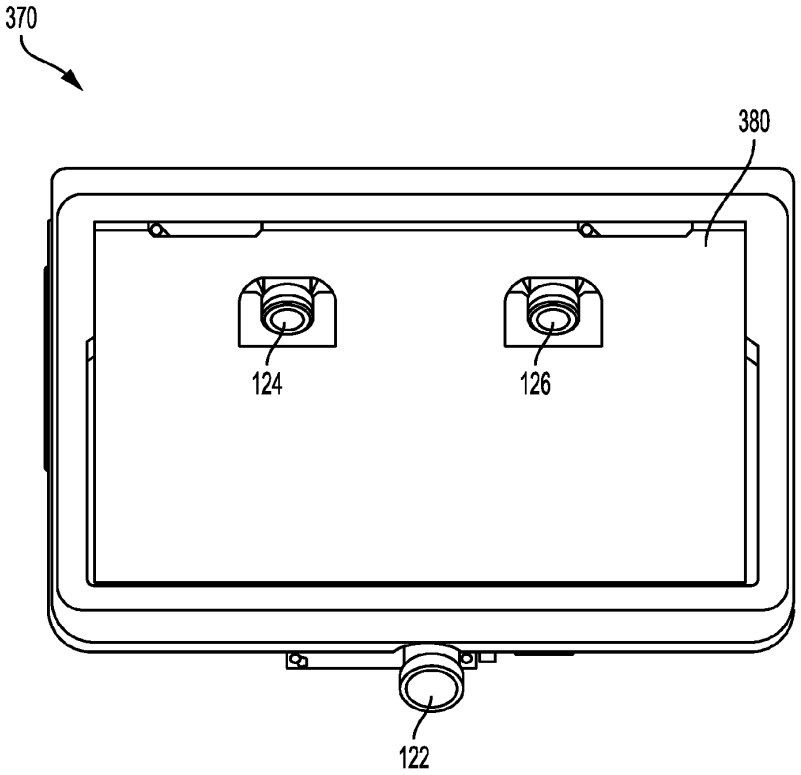

FIG. 3C

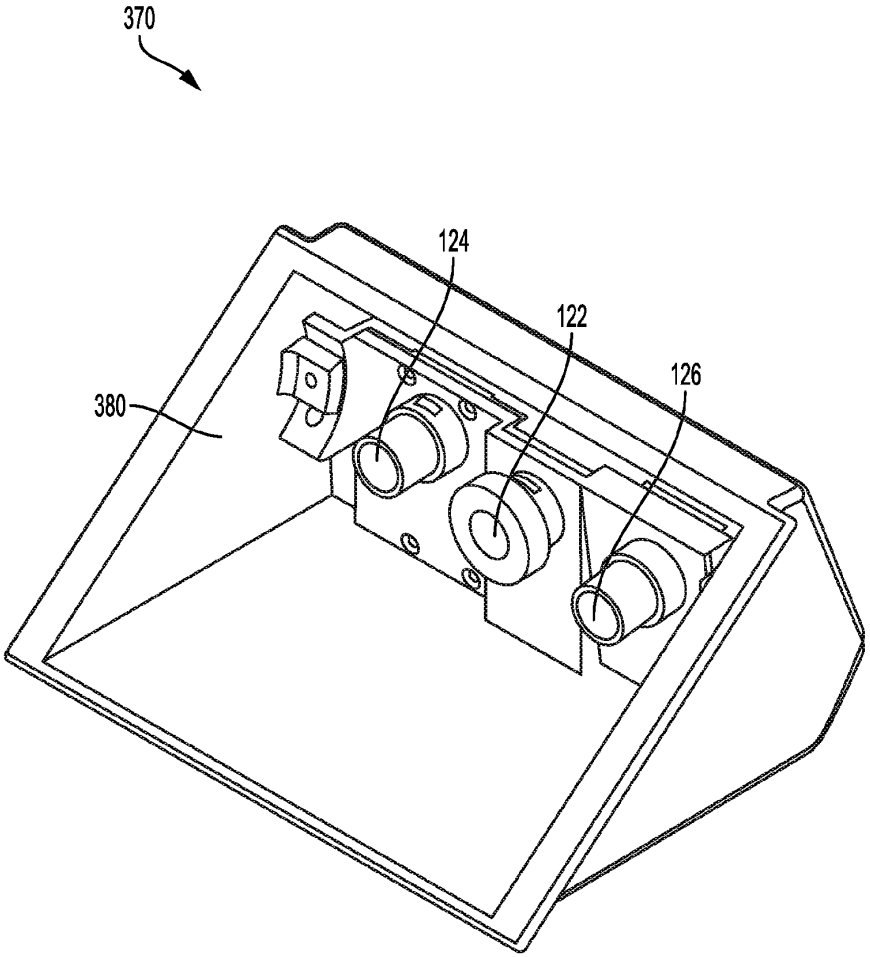

FIG. 3D

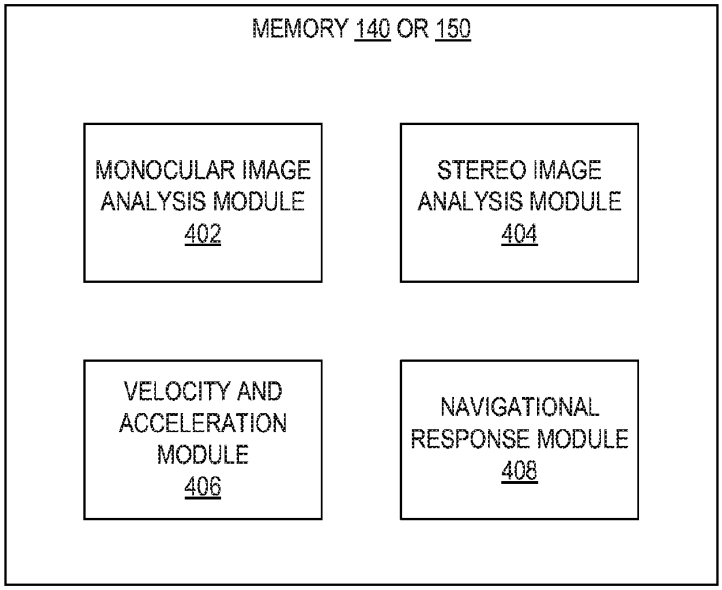
MEMORY 140 OR 150
MONOCULAR IMAGE ANALYSIS MODULE 402
STEREO IMAGE ANALYSIS MODULE 404
VELOCITY AND ACCELERATION MODULE 406
NAVIGATIONAL RESPONSE MODULE 408

FIG. 4

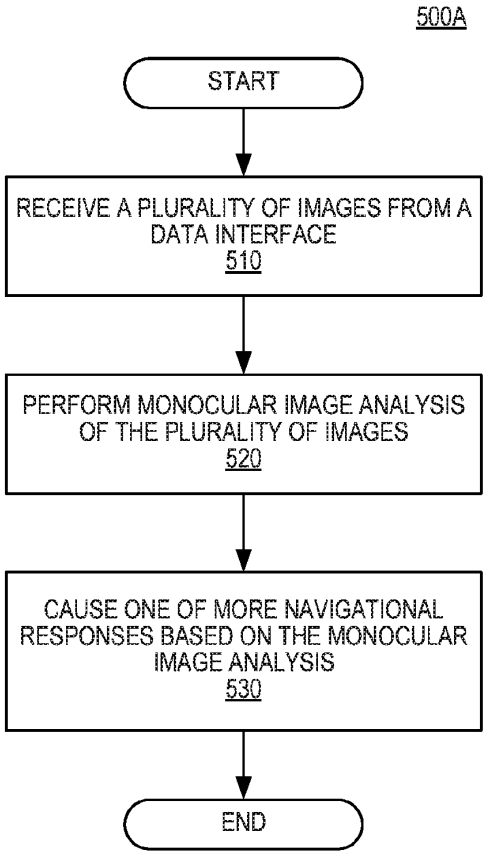
500A
START
RECEIVE A PLURALITY OF IMAGES FROM A DATA INTERFACE
510
PERFORM MONOCULAR IMAGE ANALYSIS OF THE PLURALITY OF IMAGES
520
CAUSE ONE OF MORE NAVIGATIONAL RESPONSES BASED ON THE MONOCULAR IMAGE ANALYSIS
530
END

FIG. 5A

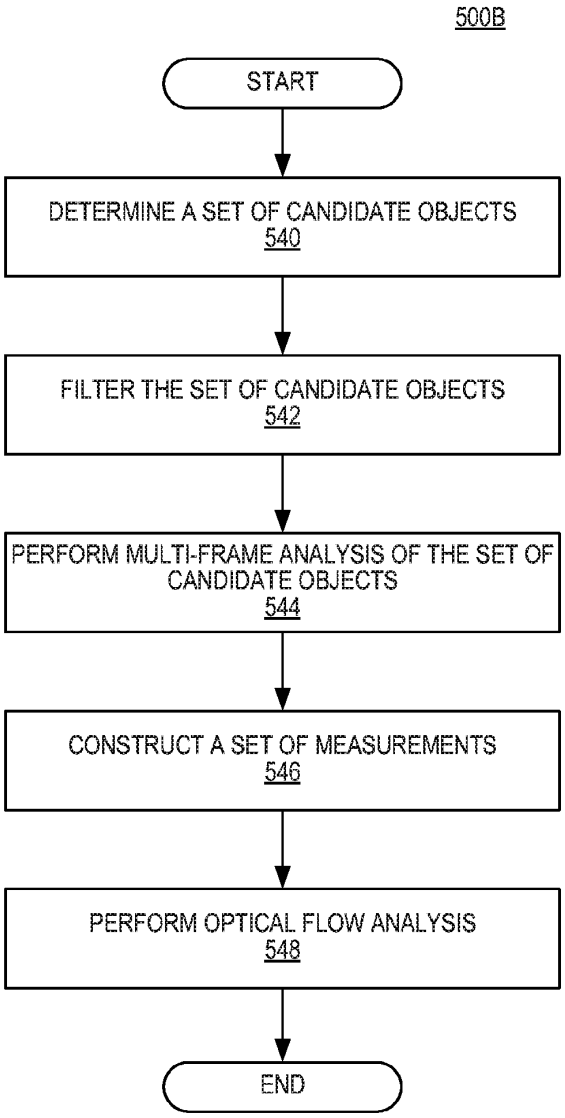
500B
START
DETERMINE A SET OF CANDIDATE OBJECTS
540
FILTER THE SET OF CANDIDATE OBJECTS
542
PERFORM MULTI-FRAME ANALYSIS OF THE SET OF CANDIDATE OBJECTS
544
CONSTRUCT A SET OF MEASUREMENTS
546
PERFORM OPTICAL FLOW ANALYSIS
548
END

FIG. 5B

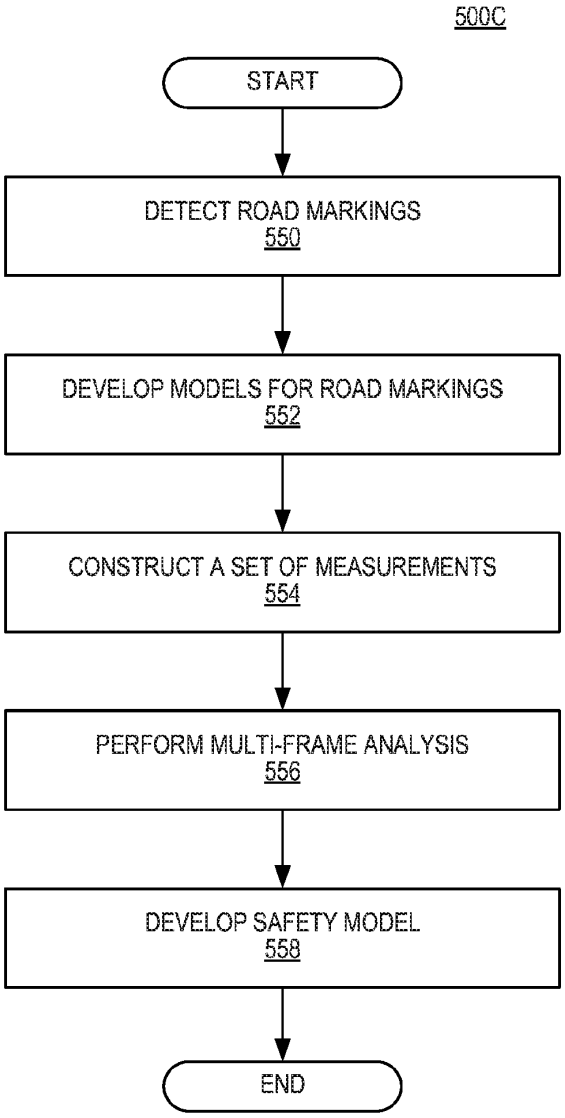
500C
START
DETECT ROAD MARKINGS
550
DEVELOP MODELS FOR ROAD MARKINGS
552
CONSTRUCT A SET OF MEASUREMENTS
554
PERFORM MULTI-FRAME ANALYSIS
556
DEVELOP SAFETY MODEL
558
END

FIG. 5C

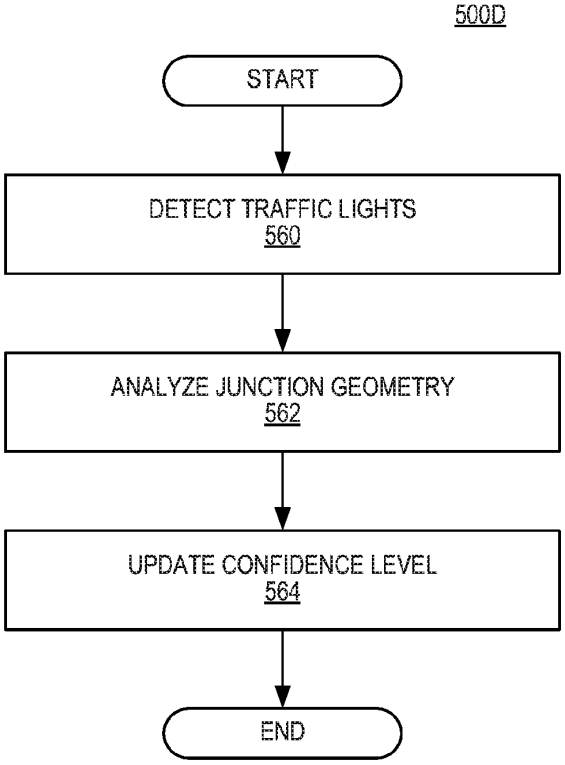
500D
START
DETECT TRAFFIC LIGHTS
560
ANALYZE JUNCTION GEOMETRY
562
UPDATE CONFIDENCE LEVEL
564
END

FIG. 5D

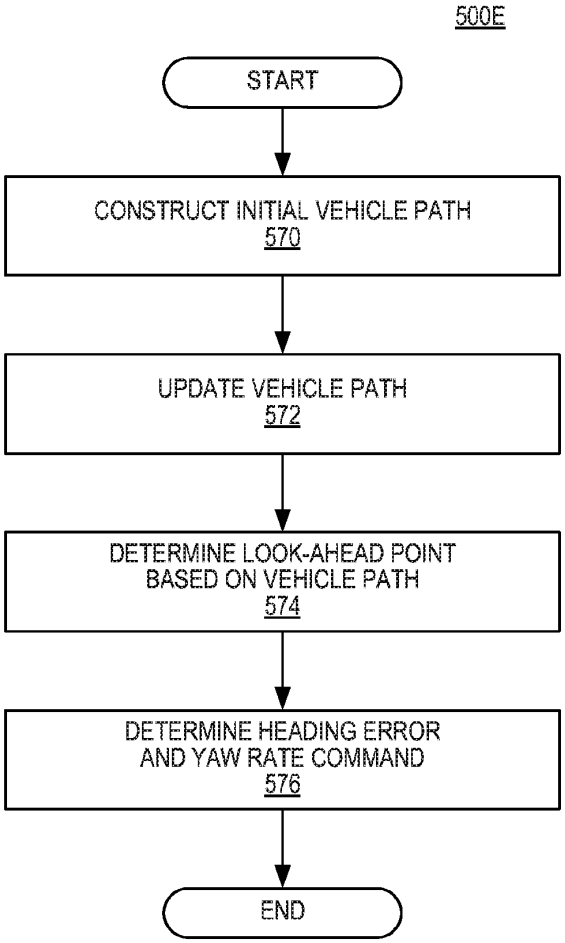
500E
START
CONSTRUCT INITIAL VEHICLE PATH
570
UPDATE VEHICLE PATH
572
DETERMINE LOOK-AHEAD POINT
BASED ON VEHICLE PATH
574
DETERMINE HEADING ERROR
AND YAW RATE COMMAND
576
END

FIG. 5E

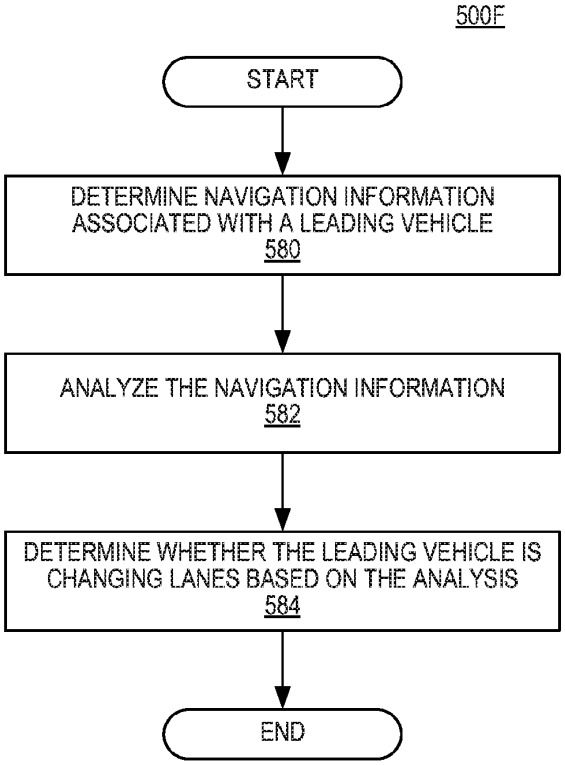
500F
START
DETERMINE NAVIGATION INFORMATION ASSOCIATED WITH A LEADING VEHICLE
580
ANALYZE THE NAVIGATION INFORMATION
582
DETERMINE WHETHER THE LEADING VEHICLE IS CHANGING LANES BASED ON THE ANALYSIS
584
END

FIG. 5F

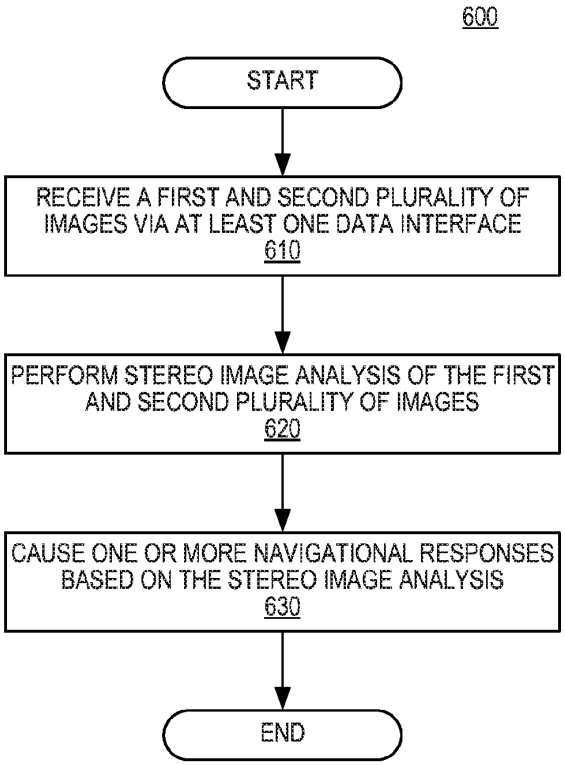
600
START
RECEIVE A FIRST AND SECOND PLURALITY OF IMAGES VIA AT LEAST ONE DATA INTERFACE
610
PERFORM STEREO IMAGE ANALYSIS OF THE FIRST AND SECOND PLURALITY OF IMAGES
620
CAUSE ONE OR MORE NAVIGATIONAL RESPONSES BASED ON THE STEREO IMAGE ANALYSIS
630
END

FIG. 6

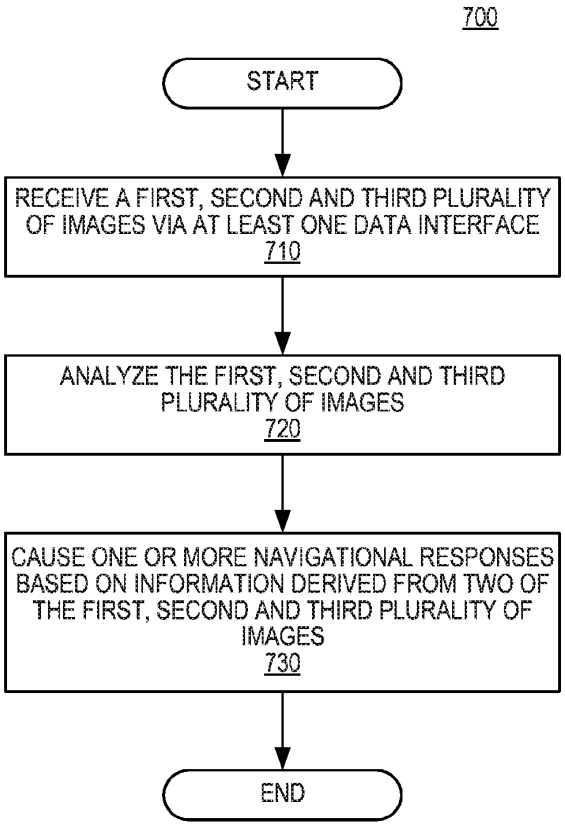
700
START
RECEIVE A FIRST, SECOND AND THIRD PLURALITY OF IMAGES VIA AT LEAST ONE DATA INTERFACE
710
ANALYZE THE FIRST, SECOND AND THIRD PLURALITY OF IMAGES
720
CAUSE ONE OR MORE NAVIGATIONAL RESPONSES BASED ON INFORMATION DERIVED FROM TWO OF THE FIRST, SECOND AND THIRD PLURALITY OF IMAGES
730
END

FIG. 7

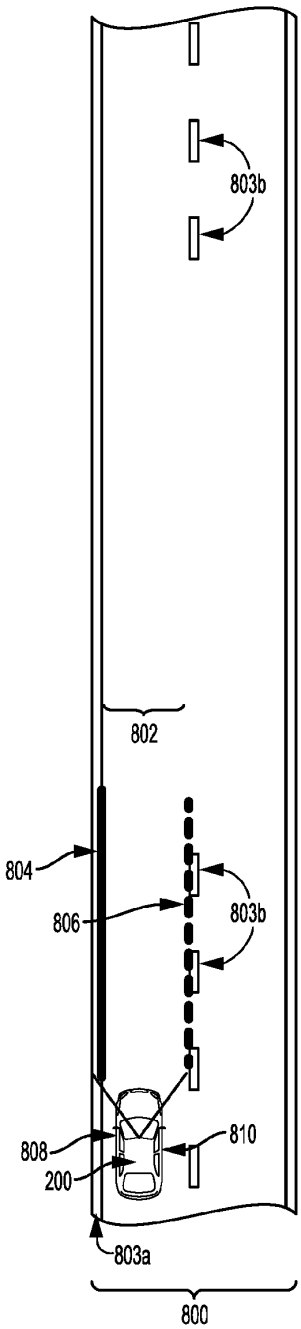

FIG. 8A

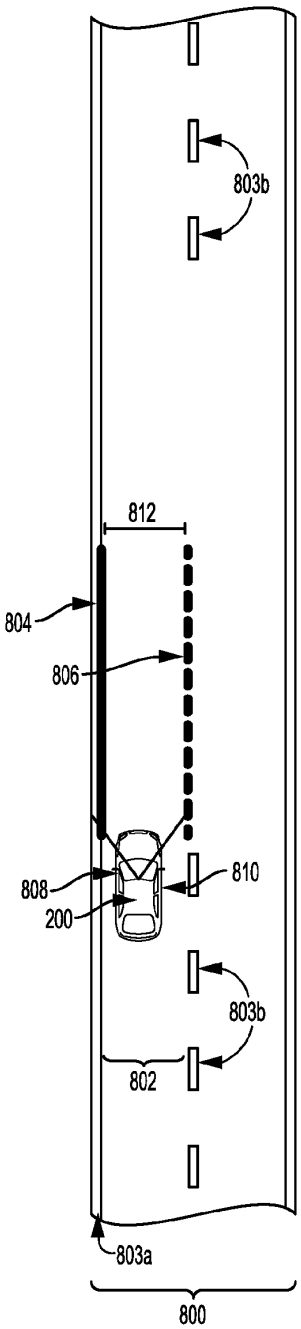

FIG. 8B

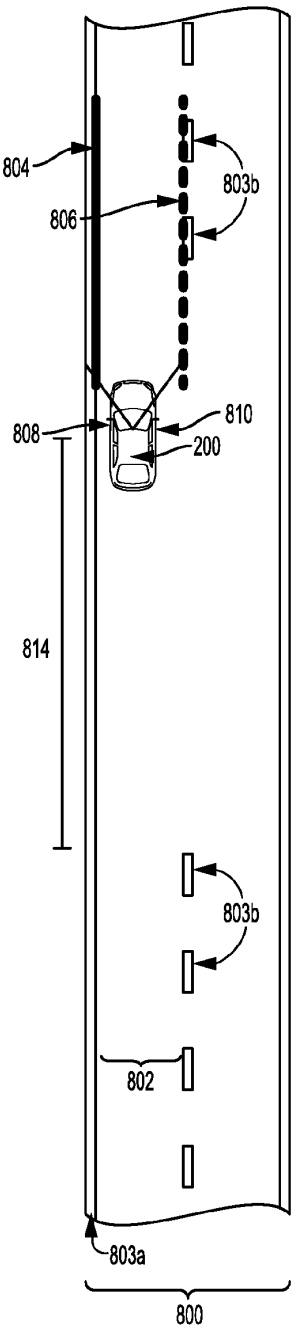

FIG. 8C

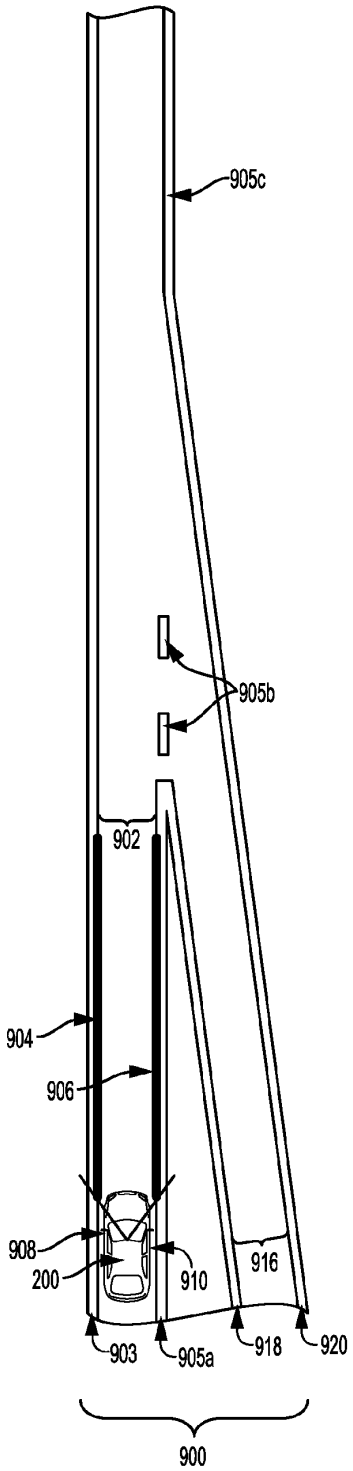

FIG. 9A

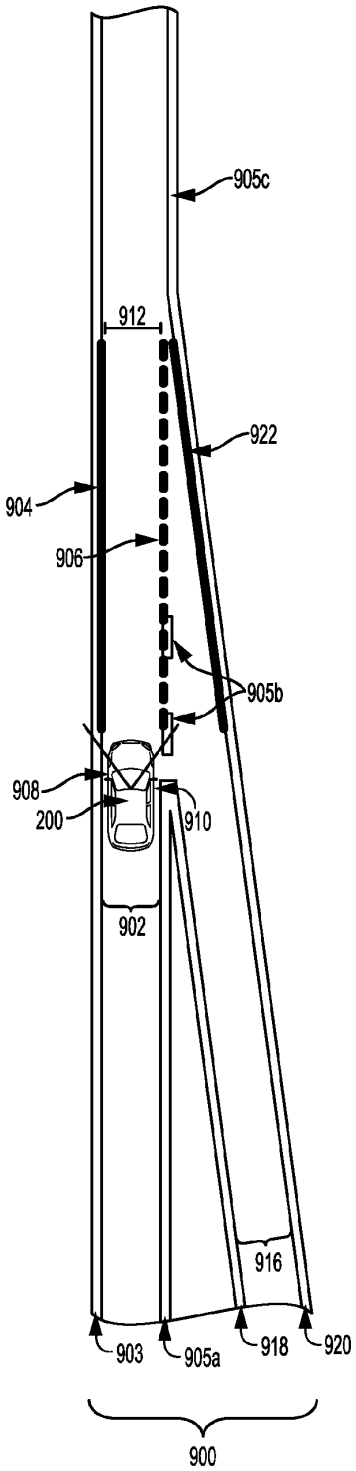

FIG. 9B

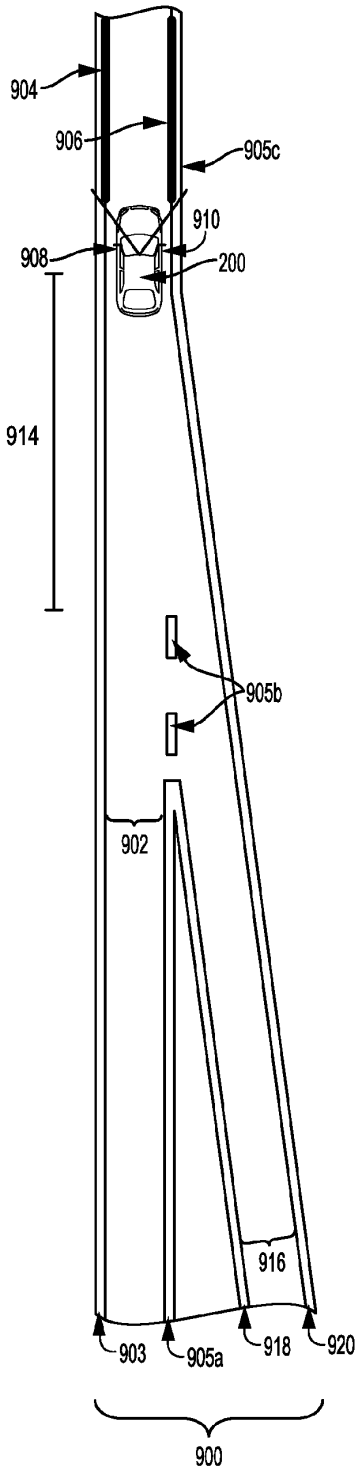

FIG. 9C

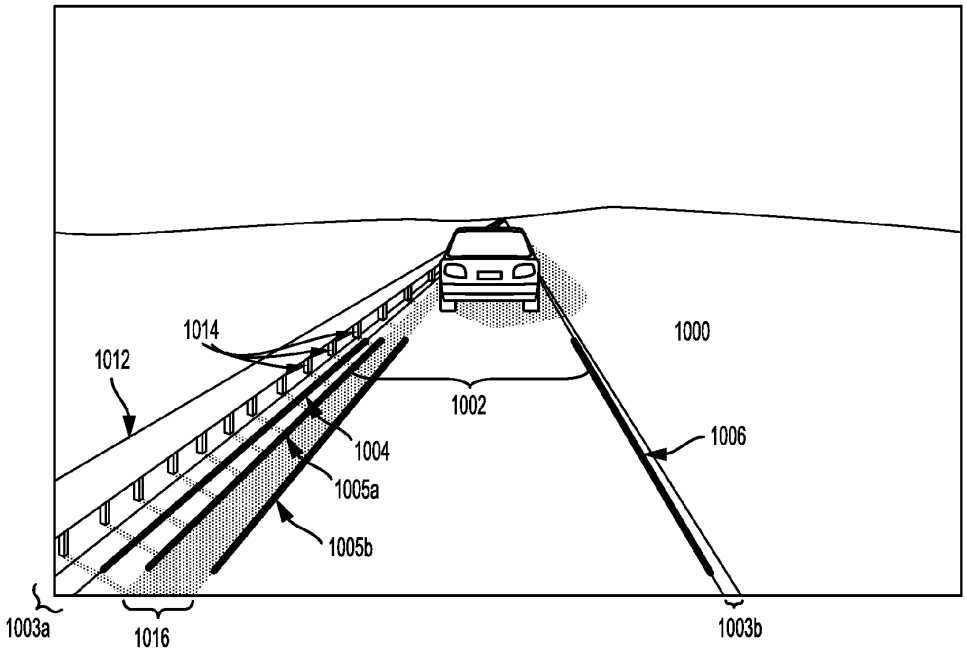

FIG. 10A

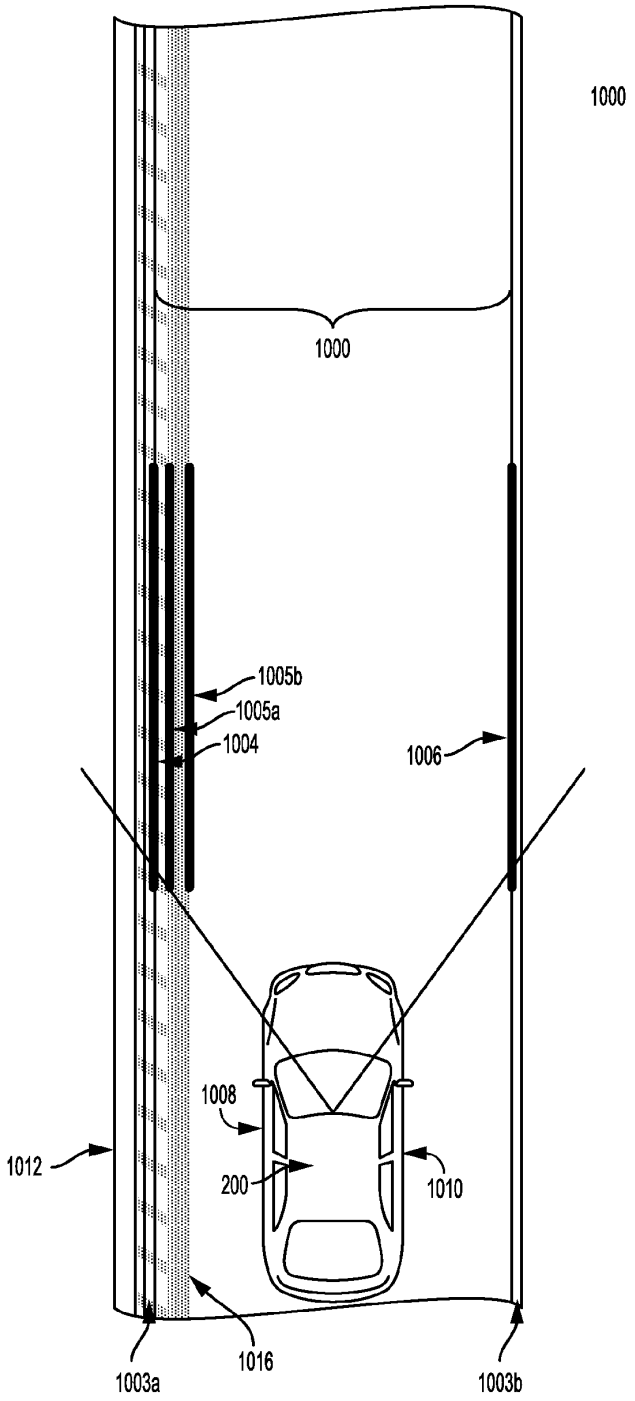
1000
1000
1005b
1005a
1004
1006
1008
1012
200
1010
1016
1003a
1003b

FIG. 10B

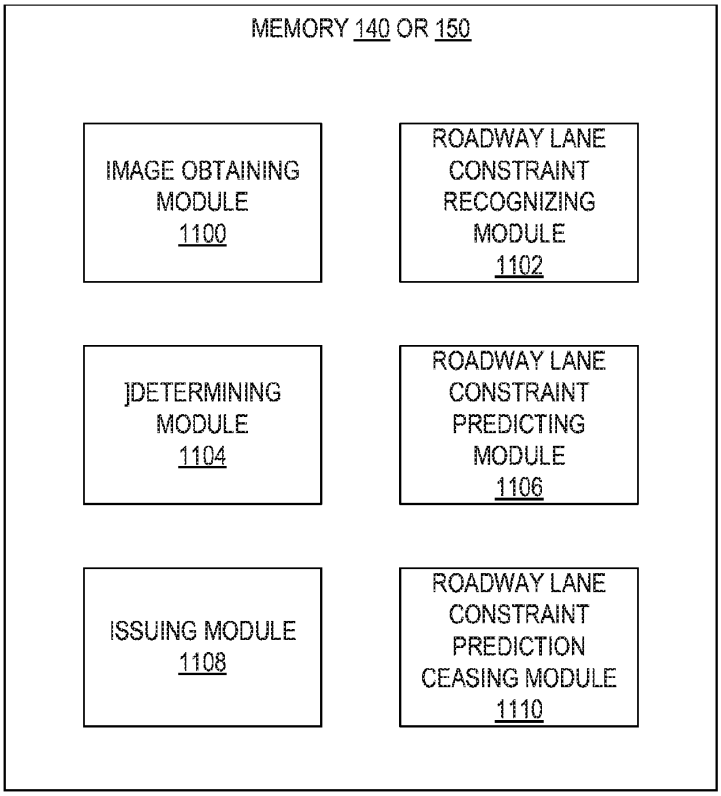
MEMORY 140 OR 150
IMAGE OBTAINING MODULE 1100
ROADWAY LANE CONSTRAINT RECOGNIZING MODULE 1102
]DETERMINING MODULE 1104
ROADWAY LANE CONSTRAINT PREDICTING MODULE 1106
ISSUING MODULE 1108
ROADWAY LANE CONSTRAINT PREDICTION CEASING MODULE 1110

FIG. 11

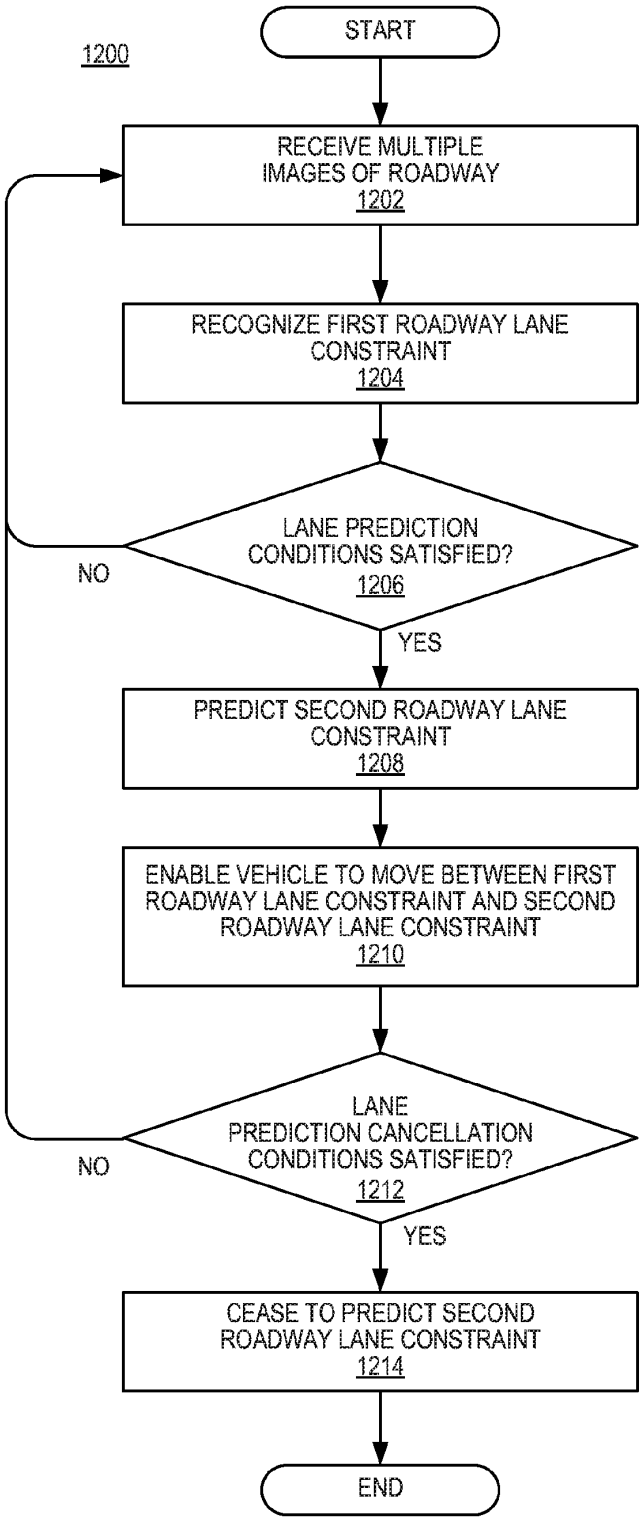
1200
START
RECEIVE MULTIPLE IMAGES OF ROADWAY
1202
RECOGNIZE FIRST ROADWAY LANE CONSTRAINT
1204
LANE PREDICTION CONDITIONS SATISFIED?
1206
NO
YES
PREDICT SECOND ROADWAY LANE CONSTRAINT
1208
ENABLE VEHICLE TO MOVE BETWEEN FIRST ROADWAY LANE CONSTRAINT AND SECOND ROADWAY LANE CONSTRAINT
1210
LANE PREDICTION CANCELLATION CONDITIONS SATISFIED?
1212
NO
YES
CEASE TO PREDICT SECOND ROADWAY LANE CONSTRAINT
1214
END

FIG. 12

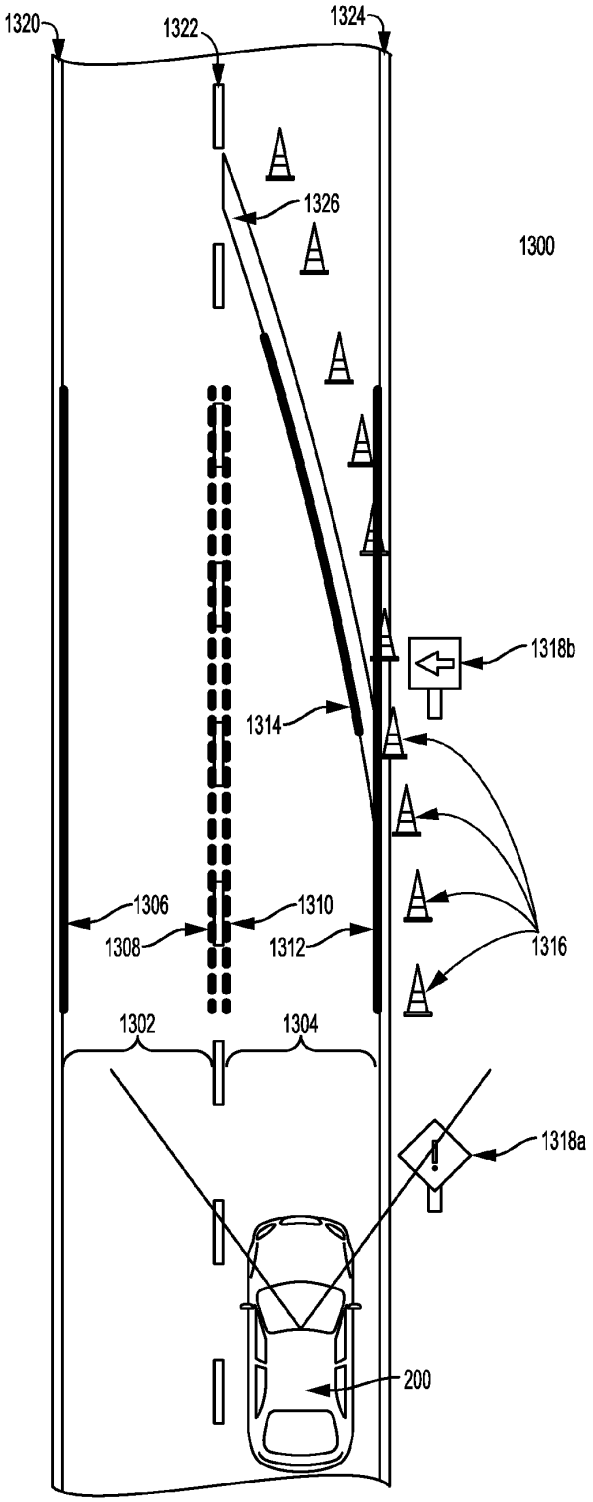
1320
1322
1324
1326
1300
1318b
1314
1306
1310
1308
1312
1316
1302
1304
1318a
200

FIG. 13

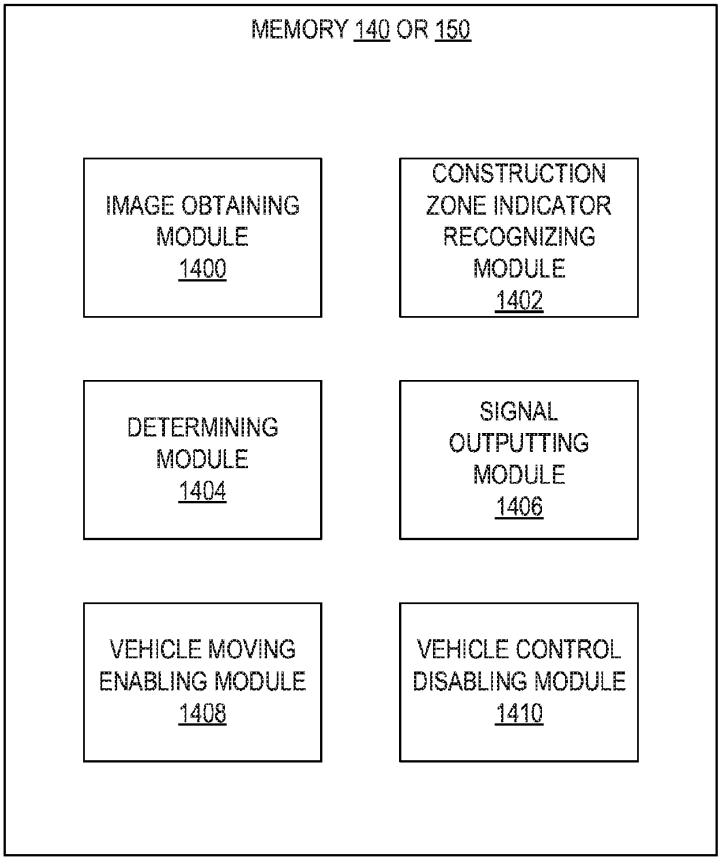
MEMORY 140 OR 150
IMAGE OBTAINING MODULE 1400
CONSTRUCTION ZONE INDICATOR RECOGNIZING MODULE 1402
DETERMINING MODULE 1404
SIGNAL OUTPUTTING MODULE 1406
VEHICLE MOVING ENABLING MODULE 1408
VEHICLE CONTROL DISABLING MODULE 1410

FIG. 14

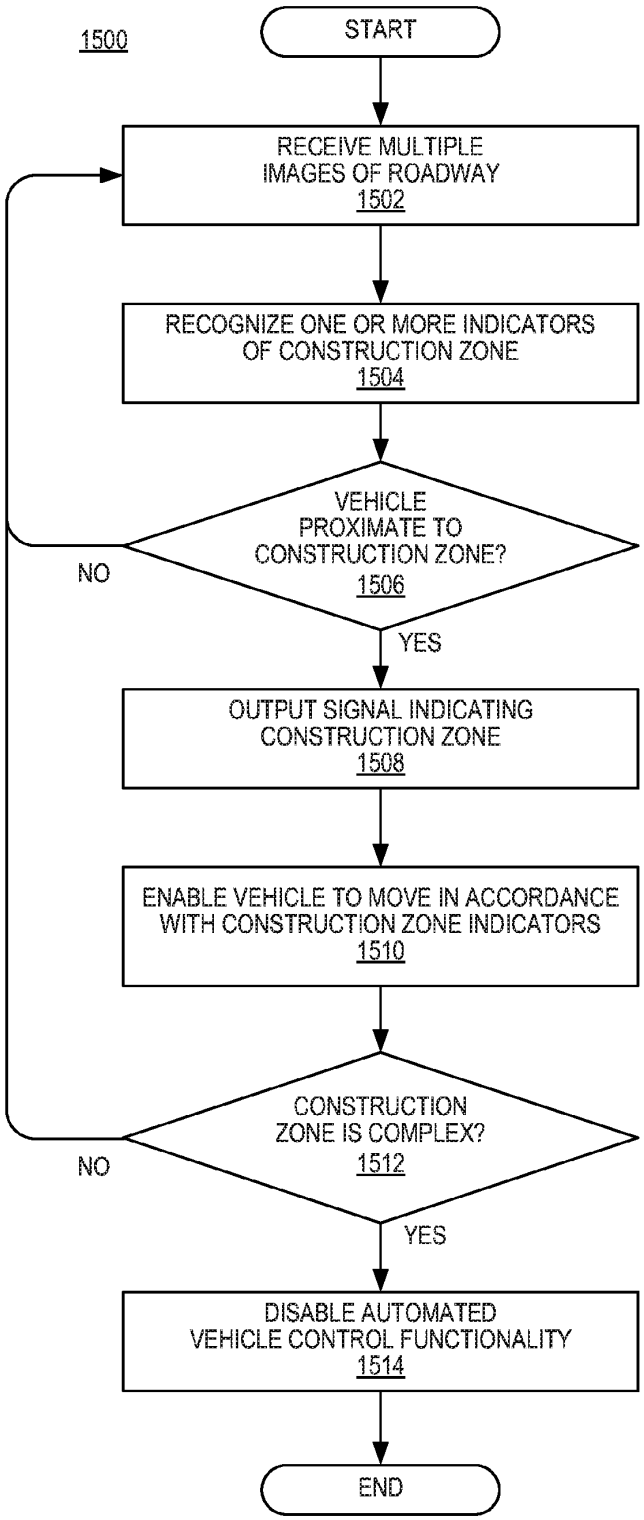
1500
START
RECEIVE MULTIPLE IMAGES OF ROADWAY 1502
RECOGNIZE ONE OR MORE INDICATORS OF CONSTRUCTION ZONE 1504
VEHICLE PROXIMATE TO CONSTRUCTION ZONE? 1506
NO
YES
OUTPUT SIGNAL INDICATING CONSTRUCTION ZONE 1508
ENABLE VEHICLE TO MOVE IN ACCORDANCE WITH CONSTRUCTION ZONE INDICATORS 1510
CONSTRUCTION ZONE IS COMPLEX? 1512
NO
YES
DISABLE AUTOMATED VEHICLE CONTROL FUNCTIONALITY 1514
END

FIG. 15

INTERNATIONAL SEARCH REPORT

International application No
PCT/IL2015/050833

A. CLASSIFICATION OF SUBJECT MATTER

INV. G06K9/00
ADD.

According to International Patent Classification (IPC) or to both national classification and IPC

B. FIELDS SEARCHED

Minimum documentation searched (classification system followed by classification symbols)

G06K

Documentation searched other than minimum documentation to the extent that such documents are included in the fields searched

Electronic data base consulted during the international search (name of data base and, where practicable, search terms used)

EPO-Internal

C. DOCUMENTS CONSIDERED TO BE RELEVANT

Category*	Citation of document, with indication, where appropriate, of the relevant passages	Relevant to claim No.
X	EP 2 325 824 A1 (HITACHI LTD [JP]) 25 May 2011 (2011-05-25) paragraphs [0005], [0021], [0022], [0035]; figures 1,2.4,6,7 -----	1-3,5,7, 21-23

[ ] Further documents are listed in the continuation of Box C.

[X] See patent family annex.

* Special categories of cited documents :

"A" document defining the general state of the art which is not considered to be of particular relevance

"E" earlier application or patent but published on or after the international filing date

"L" document which may throw doubts on priority claim(s) or which is cited to establish the publication date of another citation or other special reason (as specified)

"O" document referring to an oral disclosure, use, exhibition or other means

"P" document published prior to the international filing date but later than the priority date claimed

"T" later document published after the international filing date or priority date and not in conflict with the application but cited to understand the principle or theory underlying the invention

"X" document of particular relevance; the claimed invention cannot be considered novel or cannot be considered to involve an inventive step when the document is taken alone

"Y" document of particular relevance; the claimed invention cannot be considered to involve an inventive step when the document is combined with one or more other such documents, such combination being obvious to a person skilled in the art

"&" document member of the same patent family

Date of the actual completion of the international search	Date of mailing of the international search report
22 December 2015	08/01/2016

Name and mailing address of the ISA/	Authorized officer
European Patent Office, P.B. 5818 Patentlaan 2 NL - 2280 HV Rijswijk Tel. (+31-70) 340-2040, Fax: (+31-70) 340-3016	Chateau, Jean-Pierre

1

Form PCT/ISA/210 (second sheet) (April 2005)

INTERNATIONAL SEARCH REPORT

Information on patent family members

International application No
PCT/IL2015/050833

Patent document cited in search report	Publication date	Patent family member(s)	Publication date
EP 2325824 A1	25-05-2011	CN 102132335 A	20-07-2011
		EP 2325824 A1	25-05-2011
		JP 5094658 B2	12-12-2012
		JP 2010072973 A	02-04-2010
		US 2011222732 A1	15-09-2011
		WO 2010032532 A1	25-03-2010

Form PCT/ISA/210 (patent family annex) (April 2005)

(19) Europäisches Patentamt
European Patent Office
Office européen des brevets

(11) EP 2 605 185 A2

(12) EUROPEAN PATENT APPLICATION

(43) Date of publication:
19.06.2013 Bulletin 2013/25

(51) Int Cl.:
G06K 9/00 (2006.01)

(21) Application number: 12275201.7

(22) Date of filing: 12.12.2012

(84) Designated Contracting States:
AL AT BE BG CH CY CZ DE DK EE ES FI FR GB GR HR HU IE IS IT LI LT LU LV MC MK MT NL NO PL PT RO RS SE SI SK SM TR
Designated Extension States:
BA ME

(30) Priority: 12.12.2011 US 201161569306 P
19.09.2012 US 201261702755 P

(71) Applicant: Mobileye Technologies Limited
24854 Nicosia (CY)

(72) Inventor: Stein, Gideon P
96263 Jerusalem (IL)

(74) Representative: Jehan, Robert
Williams Powell
Staple Court
11 Staple Inn Buildings
London, WC1V 7QH (GB)

(54) Detection of obstacles at night by analysis of shadows

(57) A driver assistance systems mountable in a host vehicle while the host vehicle is moving forward with headlights on for detection of obstacles based on shadows. The driver assistance system includes a camera (12) operatively connectible to a processor (30). A first image frame and a second image frame are captured of a road. A first dark image patch and a second dark image patch include intensity values less than a threshold value. The first and the second dark image patches are tracked from the first image frame to the second image frame as corresponding images of the same portion of the road. Respective thicknesses in vertical image coordinates are measured of the first and second dark image patches responsive to the tracking.

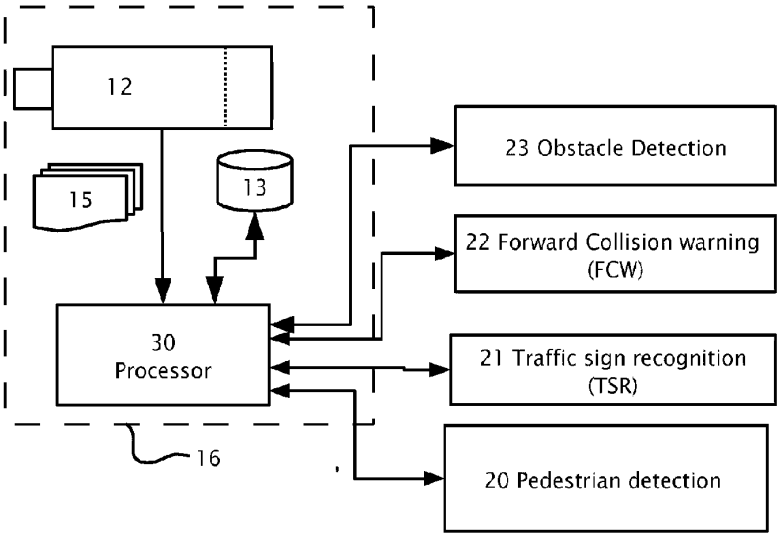

Fig. 2

EP 2 605 185 A2

Printed by Jouve, 75001 PARIS (FR)

Description

BACKGROUND

1. Technical Field

[0001] The present invention relates to the field of driver assistance systems (DAS) and in particular to detection of obstacles in a road using a camera.

2. Description of Related Art

[0002] Larson et al. [1] perform detection of negative obstacles using LIDAR and other three dimensional data. Belutta et al. [2] detect depth discontinuities of negative obstacles from stereo range data. Rabkin et al. [3] use stereo range data on thermal cameras because the shape of the terrain also affects the thermal properties. Muraka et al. [4] combine stereo and motion information to detect discontinuities in daytime. They assume a piecewise planar model and show results from indoor and outdoor environment. The range of detection of drop-offs is limited to a few meters since texture is required for stereo and motion correspondence. Witus et al. [5] analyze the shadows produced by light sources mounted on the host vehicle using a stereo camera. Detection range is limited by camera focal length and stereo baseline. Furthermore, depth information on the shadow edge is only available when the light sources are displaced along the stereo baseline. In contrast, a typical stereo camera for driver assistance applications has the two cameras mounted side by side and the headlights are below the cameras.

References

[0003]

1. Larson et al., "Lidar based off-road negative obstacle detection and analysis" In 14th International IEEE Conference on Intelligent Transportation Systems (ITSC), Oct. 2011

2. Belutta et al., "Terrain Perception for Demo III", In Proceedings of the IEEE Intelligent Vehicles Symposium (IV) 2000, October 2000

3. Rabkin et al. "Nighttime negative obstacle detection for off-road autonomous navigation In Unmanned Systems", Technology IX. Edited by Gerhart, Grant R.; Gage, Douglas W.; Shoemaker, Charles M.. Proceedings of the SPIE, Volume 6561, pp. 656103 (2007)

4. Muraka "Detecting obstacles and drop-offs using stereo and motion cues for safe local motion", In IEEE/RSJ International Conference on Intelligent Robots and Systems, IROS 2008 Sept. 2008

5. Witus et al. Preliminary investigation into the use of stereo illumination to enhance mobile robot terrain perception In Proc. SPIE Vol. 4364, p. 290-301, Unmanned Ground Vehicle Technology III, Grant R. Gerhart; Chuck M. Shoemaker; Eds.]

BRIEF SUMMARY

[0004] The present invention seeks to provide an improved driver assistance system and method.

[0005] According to an aspect of the present invention, there is provided a computerized method performable at night by a driver assistance system mountable in a host vehicle as specified in claim 1.

[0006] According to another aspect of the present invention, there is provided a driver assistance system as specified in claim 11.

[0007] Various driver assistance systems and corresponding methods are provided for herein performable at night for detection of obstacles based on shadows. The driver assistance systems are mountable in a host vehicle while the host vehicle is moving forward with headlights on. The driver assistance systems include a camera operatively connectible to a processor. A first image frame and a second image frame are captured of a road in the field of view of the camera. The first and the second image frames are processed to locate a first dark image patch of the first image frame and a second dark image patch of the second image frame. The first image frame and the second image frame may be filtered with a threshold value of gray scale to produce the first dark image patch of the first image frame and the second dark image patch of the second image frame. The first dark image patch and the second dark image patch include intensity

IPR2025-01035
Tesla EX1002 Page 2750

values less than the threshold value. In another embodiment, the processing to find the first and second dark image patches may include searching for a transition from light to dark (e.g. high gray scale to low gray scale values) and another transition from dark to light. The first and the second dark image patches are tracked from the first image frame to the second image frame as corresponding images of the same portion of the road. Respective thicknesses in vertical image coordinates are measured of the first and second dark image patches responsive to the tracking performed from the first image frame to the second image frame.

[0008] Prior to the tracking, connectivity of picture elements may be performed within the first and second dark image patches. It may be determined that a change of the thicknesses between the first and second dark image patches is consistent with a shadow cast by an obstacle in the road from illumination from the headlights and an obstacle in the road is detected. A driver of the host vehicle may be audibly warned responsive to the detection of the obstacle.

[0009] The change in the thicknesses between the first and second image frames may be analyzed to distinguish between the detected obstacle being a positive or a negative obstacle and/ or a shape of the detected obstacle may be computed.

[0010] It may be determined that a change of the thicknesses between the first and second image frames is not consistent with a shadow cast by an obstacle from illumination from the headlights. The thicknesses may be measured in picture elements according to a total number of picture elements with intensity values less than the threshold divided by a width in picture element columns of the .first and second dark image patches.

[0011] The foregoing and/or other aspects will become apparent from the following detailed description when considered in conjunction with the accompanying drawing figures.

BRIEF DESCRIPTION OF THE DRAWINGS

[0012] Embodiments of the present invention are described below, by way of example only, with reference to the accompanying drawings, wherein:

Figures 1 and 2 illustrate a system including a camera or image sensor mounted in a host vehicle, according to an embodiment of the present invention.

Figures 3a and 3b show a simplified line drawings of a night time driving scenario, according to an embodiment of the present invention.

Figures 4a and 4b show image frames of a speed bump where a host vehicle is at different distances from the speed bump to illustrate an embodiment of the present invention.

Figures 4c and 4d show a portion of image frames as shown respectively in Figures 4a and 4b in greater detail to illustrate an embodiment of the present invention.

Figure 5a shows an example of a shadow produced , according to an embodiment of the present invention.

Figures 5b, 5c and 5d show further details of the drop in road surface as shown in Figure 5a, at different distances to the drop.

Figure 6a shows a change in asphalt color with no drop, according to an embodiment of the present invention.

Figure 6b shows a gray-scale profile for a simple step in brightness with no dark shadow patch for the change in asphalt color shown in Figure 6a.

Figures 6c and 6e show a dark stripe from a change in asphalt paving of the road shown in successive image frames, according to an embodiment of the present invention.

Figures 6d and 6f show a simple step edge of brightness in greater detail of respective

Figures 6c and 6e, according to an embodiment of the present invention.

Figure 7 which shows a graph of simulation results, according to an embodiment of the present invention.

Figures 8a and 8b shows a simplified line drawing of a night time driving scenario and an area of greater detail of the night time driving scenario respectively, according to an embodiment of the present invention.

Figure 9 shows a graph of a simulation for a drop in road surface of 0.1m over a length of 0.8m and 1.6m, according to an embodiment of the present invention.

Figures 10a-10e show a sequence of five images where a host vehicle approaches a speed bump and a shadow, according to an embodiment of the present invention.

Figures 10f-10j show greater detail of the speed bump and the shadow for respective Figures 10a-10e.

Figure 11 shows a flow chart of a method, according to an embodiment of the present invention.

Figure 12 shows a graph of the thickness of shadow at the far side of a speed bump as a function of distance to the speed bump, according to an embodiment of the present invention.

Figures 13a and 13b show two examples of soft shoulders at the road edge, according to an embodiment of the present invention.

IPR2025-01035
Tesla EX1002 Page 2751

DETAILED DESCRIPTION

[0013] Reference will now be made in detail to embodiments of the present invention, examples of which are illustrated in the accompanying drawings, wherein like reference numerals refer to the like elements throughout. The features are described below to explain the teachings herein by referring to the Figures.

[0014] Before explaining features taught herein in detail, it is to be understood that the invention is not limited in its application to the details of design and the arrangement of the components set forth in the following description or illustrated in the drawings. The invention is capable of other features or of being practiced or carried out in various ways. Also, it is to be understood that the phraseology and terminology employed herein is for the purpose of description and should not be regarded as limiting.

[0015] By way of introduction, embodiments of the present invention are directed to driver assistance systems using forward facing cameras which are becoming mainstream. These forward facing cameras may be rigidly mounted inside the driver cabin near the rear-view mirror. Cameras mounted inside the driver cabin near the rear-view mirror puts the cameras at a fixed position, significantly above the vehicle headlights. With the fixed position, the shadows produced by the headlights, when driving on dark roads, are visible in the camera image. The following detailed description describes how to use these shadows to enhance obstacle detection. In particular the description describes how the shadows can be used for detecting speed-bumps and negative obstacles at night from a moving vehicle. The information from the enhanced obstacle detection can be used to warn the driver or to prepare the vehicle for the anticipated change in road surface. The detailed description also gives a detailed analysis of the particular image motion characteristics of the shadow when the host vehicle is moving forward. The information from the detailed analysis allows the discrimination between shadows and other dark patches on the road and then, through careful analysis of the shadow over time, both the depth and shape of the obstacle can be determined. The detection range from shadow analysis may be significantly larger than what is possible from stereo or structure from motion (SFM) in dark night conditions.

[0016] As host vehicle moves forward, the image of a dark patch of a shadow, produced by the host vehicle headlights, behaves very differently to other dark patches on the road such as those due to tar patches, differences in asphalt color or shadows due to other light sources.

[0017] It will be shown below that the image of a mark on a road surface will increase as a function of the inverse of the distance (Z) squared, where Z is the distance from the camera to the mark on the road surface:

$$\frac{1}{Z^2} = Z^{-2}$$

[0018] While the size of a shadow produced by a sharp negative edge will increase only as a function of the inverse of the distance (Z):

$$\frac{1}{Z} = Z^{-1}$$

[0019] The shadow of a round edge, such as the far side of a speed bump, will increase even more slowly. By tracking the dark patch over time it is possible to differentiate between shadows and road marks.

[0020] The difference in the observed behavior can be explained as follows. A mark on the road retains its size (in world coordinates) as a host vehicle approaches. With a sharp negative obstacle, the visible part of the shadow extends from the top of the negative obstacle step to the far side of the shadow. When the host vehicle moves towards the obstacle, the lighting angle changes and the far edge of the shadow on the road moves and the extent of the shadow on the road is decreased significantly. If the edge producing the shadow is rounded the closer edge of the shadow is formed by the tangent point of the edge. As the host vehicle moves forward the tangent point moves further away and drops in height. These two factors of the edge and the host vehicle moving forward, reduce the size of the shadow on the road even further.

[0021] Referring now to the drawings, reference is now made to Figures 1 and 2 which illustrate a system **16** including a camera or image sensor **12** mounted in a host vehicle **18**, according to an aspect of the present invention. Image sensor **12**, imaging a field of view in the forward direction provides image frames **15** in real time and image frames **15** are captured by an image processor **30**. Processor **30** may be used to process image frames **15** simultaneously and/or in parallel to serve a number of advanced driver assistance systems/applications. The advanced driver assistance systems (ADAS) may be implemented using specific hardware circuitry with on board software and/or software control

IPR2025-01035
Tesla EX1002 Page 2752

algorithms in memory **302.** Image sensor **12** may be monochrome or black-white, i.e. without color separation or image sensor **12** may be color sensitive. By way of example in Figure 2, image frames **15** are used to serve pedestrian detection **20,** traffic sign recognition (TSR) **21** forward collision warning (FCW) **22** and obstacle detection **23** using shadows, according to embodiments of the present invention. Processor **30** may be used to process image frames **15** to detect and recognize an image or portions of the image in the forward field of view of camera **12.**

[0022] In some cases, image frames **15** are partitioned between different driver assistance applications and in other cases the image frames **15** may be shared between the different driver assistance applications.

[0023] Although embodiments of the present invention are presented in the context of driver assistance applications, embodiments of the present invention may be equally applicable in other real time signal processing applications and/or digital processing applications, such as communications, machine vision, audio and/or speech processing as examples.

[0024] Reference is now made to Figure 3a which shows a simplified line drawing **30a** of a night time driving scenario, according to a feature of the present invention. Camera **12** is mounted in close proximity to the host vehicle **18** windshield and host vehicle **18** headlights illuminate the scene ahead as host vehicle **18** travels along road surface **36.** Host vehicle **18** headlights produce a shadow **32** on the road when there is a obstacle. In the example shown in Figure 3a the obstacle is low object **34** on road **36.** Low object **34** may be for example a speed bump, raised manhole cover but the discussion that follows is the same for a negative obstacle such as a drop or pothole. Since the camera **12** is mounted higher than the headlights, shadow **32** can be seen by camera **12** in host vehicle **18.** Negative obstacles and speed bumps produce dark patches in image frames **15.**

[0025] In Figure 3a are a number of distances, where distance is designated as Z in the equations which are shown later on the detailed descriptions that follow. Let the coordinate system reference point (0,0) be the point on the road **36** directly below camera **12,** indicated by dotted line **31.** H_C is the height of camera **12,** H_L the height of the headlight of host vehicle **18** and H_T the height of obstacle **34.** The headlights of vehicle **18** are Z_L in front of camera **12,** that is the distance between dotted lines **31** and **33.** Z_T is the distance from camera **12** to the edge of obstacle **34,** that is the distance between dotted lines **31** and **35.** Z_{S1} and Z_{S2} are the close and far points on shadow **32** which are visible to camera **12,** the distances between dotted lines **31** and **37** and dotted lines **31** and **39** respectively.

[0026] Reference is now made to Figure 3b which shows a simplified line drawing **30b** of a night time driving scenario, according to an embodiment of the present invention. Two host vehicles **18** are shown with respective cameras **12.** From Figure 3b it can be seen that when host vehicle **18** moves forward towards obstacle **34,** the extent of shadow **32** becomes smaller.

[0027] When host vehicle **18** moves towards the obstacle **34,** the lighting angle changes and the far edge of shadow **32** on road **36** moves and the extent of shadow **32** on road **36** is decreased significantly. If the edge producing shadow **32** is rounded, the closer edge of shadow **32** is formed by the tangent point of the edge. As host vehicle **18** moves forward the tangent point moves further away and drops in height. These two factors of the edge and the host vehicle **18** moving forward, reduce the size of shadow **32** on road **36** even further.

[0028] Reference is now made to Figures 4a and 4b which show image frames of a speed bump where host vehicle **18** is at a distance away from the speed bump of 40.9m and 27.0m respectively, according to an embodiment of the present invention. Figures 4a and 4b show white reflectors **40** and a rock **42.** The shadow beyond the speed bump is only slightly wider in Figure 4b than the shadow in Figure 4a where host vehicle **18** is farther from the speed bump. Also, the lateral distance difference between reflectors **40** is much more pronounced when compared to the change in shadow width beyond the speed bump for the two image frames. Therefore, the shadow on the far side of the speed bump increases and/ or decreases in size much more slowly than the image size of the speed bump itself.

[0029] Reference is now made to Figures 4c and 4d which show a portion of image frames shown respectively in Figures 4a and 4b in greater detail, according to an embodiment of the present invention. Plotted on each of Figures 4a and 4b are respective gray scale value curves **44a** and **44b.** The further to right curves **44a/ 44b** go laterally, the greater is the gray scale value. Conversely, the further to left curves **44a/ 44b** go laterally, the lesser is the gray scale value. In Figure 4c where host vehicle **18** is farther from the speed bump, peaks in gray scale value occur by virtue of the contributions from reflection of rock **42** and the illuminated side of the speed bump along with reflection from reflectors **40.** Furthermore, it can be observed that the shadow cast by the speed bump is only slightly narrower when the host vehicle **18** is farther from the speed bump.

[0030] Changes in road **36** surface material, ice patches, oil marks and tar seams can also produce dark patches on the image of the road **36** surface. However, the size of such a patch in the image **15,** as the host vehicle **18** approaches, behaves very differently.

[0031] Reference is now made to Figure 5a shows an example of a shadow produced when there is a drop **52** in the road surface where there is a junction between older and newer asphalt paving. Reference is also made to Figures 5b, 5c and 5d shows further details of drop **52,** when the distance to drop **52** is at 22meters (m), 17.7m and 11.5m respectively. In Figures 5b-5d it can be seen that the size of the shadow of drop **52,** where newer paving makes way to old paving and when the road is illuminated by the headlights of host vehicle **18.** The shadow of drop **52** hardly changes as host vehicle **18** distance (Z) to drop **52** changes from 22m to 11.5m. Figures 5b, 5c and 5d have respective gray scale value

curves **54b**, **54c** and **54d** for a central column of pixels. The lowest gray scale value is shown by the left lateral peak in respective curves **54b**, **54c** and **54d** in the center of the shadow of drop **52.**

[0032] Reference is now made to Figure 6a which shows a change in asphalt color with no drop , according to an embodiment of the present invention. The corresponding gray-scale profile for Figure 6a is shown in Figure 6b, which shows a simple step in brightness with no dark shadow patch.

[0033] Reference is now made to Figures 6c and 6e which show a dark stripe **62** which is a change in asphalt paving of the road shown in successive image frames **15,** according to an embodiment of the present invention. The change in asphalt paving of the road is due to a double change in asphalt by virtue of a ditch which was filled in with new asphalt. In each image frame **15** their is no drop in height of the road surface and no shadow is produced. The gray-scale profiles shown in Figures 6d and 6f show a simple step edge of brightness in greater detail of respective Figures 6c and 6e, according to an embodiment of the present invention. Figures 6c and 6e show a dark stripe **62** on the road at 14.3m and 11.2m. The width of dark stripe **62** as shown in Figures 6c and 6e increase in size as a function of the inverse of distance squared (Z^{-2}) indicating that dark stripe **62** is a mark on the road and not a shadow from a negative obstacle (obstacle **34** for example).

[0034] The techniques described below, use the change in the actual shadow **32** itself due to the host vehicle **18** motion (and thus the motion of the light sources). The actual shadow is then analyzed by the camera **12** that is fixed relative to the light source and moves with it.

THE MATHEMATICAL MODEL

[0035] Referring back to Figure 3a, reference point (0,0) is the point on the road **32** directly below camera **12.** H_C is the height of the camera, H_L the height of the headlight and H_T the height of obstacle **34.** The headlights are Z_L in front of the camera. Z_T is the distance from camera **12** to the edge of obstacle **34** (dotted line **35**) and Z_{S1} and Z_{S2} are the close and far points of shadow **32** visible to camera **12.**

[0036] By similarity of triangles we get:

$$Z_{S1} = \frac{Z_T H_C}{H_C - H_T} \tag{1}$$

$$Z_{S2} = \frac{(Z_T - Z_L)H_L}{H_L - H_T} + Z_L \tag{2}$$

$$= \frac{Z_T H_L - Z_L H_T}{H_L - H_T} \tag{3}$$

[0037] Let y1 and y2 be the lower and upper edges of a shadow patch in the image:

$$y_1 = \frac{f H_C}{Z_{S1}} \tag{4}$$

$$y_2 = \frac{f H_C}{Z_{S2}} \tag{5}$$

[0038] The height or thickness of the patch in the image is then given by y1 -y2:

$$y_1 - y_2 = \frac{fH_C}{Z_{S1}} - \frac{fH_C}{Z_{S2}} \quad (6)$$

$$= \frac{fH_C(H_C - H_T)}{Z_T H_C} - \frac{fH_C(H_L - H_T)}{Z_T H_L - Z_L H_T} \quad (7)$$

[0039] For $Z_L << Z_T$ we can approximate:

$$y_1 - y_2 \approx \frac{f(H_T H_C - H_T H_L) Z_T}{Z_T^2 H_C} \quad (8)$$

$$\approx \frac{fH_T(H_C - H_L)}{Z_T H_C} \quad (9)$$

[0040] The image thickness of the shadow patch changes as a function of Z_T^{-1} and given an estimate of Z_T one can also estimate the (negative) height of obstacle **34.**

[0041] Consider now a marking on road **36** which at time to stretches from a distance Z_{S1} (to) to a distance Z_{S2} (to). Let:

$$\alpha = Z_{S2}(t_0) - Z_{S1}(t_0) \quad (10)$$

$$Z_{S3} = Z_{S1} + \alpha \quad (11)$$

[0042] The height or thickness of the marking in the image is given by:

$$y_3 - y_1 = \frac{fH_C}{Z_{S1} + \alpha} - \frac{fH_C}{Z_{S1}} \quad (12)$$

$$= \frac{fH_C \alpha}{(Z_{S1} + \alpha) Z_{S1}} \quad (13)$$

$$\approx \frac{fH_C \alpha}{Z_{S1}^2} \quad (14)$$

NUMERICAL EXAMPLE

[0043] Reference is now made to Figure 7 which shows a graph **70** for a simulation, according to an embodiment of the present invention. Graph **70** plots two curves, one for a patch or road mark (dotted line) and one for a shadow strip (solid line). The thickness of the patch or shadow strip is in pixels versus range to obstacle in meters (m). The simulation

has camera **12** mounted in a Renault Megane II where H_C = 1.25m, H_L = 0.73m and obstacle of height H_T = 0.1m. A shadow will appear just over 2 pixels thick at 50m. At 25m the shadow will double in size to about 4 pixels. A road mark on road at 25m will quadruple in size to 8 pixels.

[0044] Note that at a certain close distance (≈ 5m) the tangent line of the headlight and of the camera **12** coincide. After passing 5m the size of the shadow patch decreases rapidly.

[0045] Referring back to Figures 3a and 3b, Figures 3a and 3b show a step edge drop. The step edge drop is typical for a pot hole, road edge and steep speed bump. With the step edge drop, the tangent point which causes shadow **32** and the tangent point of the viewing angle from camera **12** can be approximated as the same point and which is fixed in space as host vehicle **18** moves. For extended smooth speed bumps this approximation breaks down, however.

[0046] Reference is now made to Figures 8a and 8b which shows a simplified line drawing **80** of a night time driving scenario and an area **83** of greater detail of the night time driving scenario respectively, according to an embodiment of the present invention. In Figures 8a and 8b, the tangent viewing ray **85** touches the speed bump **34** further away than the tangent illumination ray **87.** As host vehicle **18** moves forward, the tangent point **62** of the viewing ray **65** moves further away along the speed bump or obstacle **34.** This means that the near edge of shadow **32,** in image space, will move slower than a typical road point. The exact motion depends on the shape of speed bump **34** and can be used to measure the curvature of obstacle **34.**

[0047] It can also be seen that as host vehicle **18** moves forward, tangent point **84** of illumination ray **87** moves further away along obstacle **34** and the height H_T decreases. The result is that the far edge of shadow **32** on road **36** will move towards the host vehicle **18** even faster than predicted by a sharp edge. Shadow **32** on road **36** moving towards the host vehicle **18** even faster than predicted by the sharp edge effect will accelerate when host vehicle **18** gets close to the speed bump or obstacle **34** and at some distance shadow **32** will disappear completely.

[0048] From experimental results shown later, at far distances (above 30m), shadow **32** behaves more like a step edge and disappears at about 7.0m from camera **12.**

[0049] The analysis of rounded edges is complex. The tangent point **84** for the headlights does not correspond exactly to the tangent point **82** of camera **12** line of sight. Furthermore, as the host vehicle **18** moves closer to obstacle **34,** tangent points **82** and **84** will move further away and closer to road **36.** In order to analyze a rounded edge obstacle **34** (e.g. speed bump), the edge was approximated as a piecewise linear curve of 10 segments dropping from H_T = 0.1m down to zero over a given length:

$$Z_T(i) = Z_T(0) + i * \delta Z \qquad (15)$$

$$H_T(i) = H_T * (1 - 0.1 * i) \qquad (16)$$

where i=1...10.

[0050] Reference is now made to Figure 9 which shows a graph **90** for a simulation for a drop of 0.1 meter in road surface over a length of 0.8 meter and 1.6 meter, according to an example. Three curves are shown for thickness (pixels) of shadow versus range to speed bump or obstacle **34** in meters (m). Solid line **92** is for a sharp edge, dotted line **94** is for a round edge for the drop of 0.1m over the length of 0.8m and dotted line **96** is for another round edge for the drop of 0.1m over the length of 1.6m.

[0051] Host vehicle **18** in the simulation, approaches the speed bump or obstacle **34** from 50 meter down to 5 meter in steps of 1 meter. At each distance it was determined (for each of the two cases: 0.8m and 1.6m) which point along the piecewise linear curve was the occluding point for the headlight and produced the far edge and which was the occluding point for camera **12** and produced the near edge. As can be expected, the shorter the drop, the more it behaves like a step edge.

EXPERIMENTS AND RESULTS

[0052] Figures 10a-10e show a sequence of five image frames **15** where host vehicle **18** approaches speed bump **1002** and shadow **1006,** according to an embodiment of the present invention. Figures 10f-10j show greater detail of speed bump **1002** and shadow **1006** for respective Figures 10a-10e. In Figures 10a-10e the distance (Z) to speed bump **1002** and shadow **1006** are 66m, 42.4m, 26.4m, 13.6m and 7.9m respectively. Shadow **1006** at the far side of speed bump **1002** was first detected at over 40m and then tracked as it grew closer to host vehicle **18.** Figures 10f-10j have respective gray scale value curves **1004f-1004j** for a central column of pixels. The lowest gray scale value for the central column is shown by the lateral left peak in respective curves **1004f-1004j** in the center of shadow **1006.**

IPR2025-01035
Tesla EX1002 Page 2756

[0053] Reference is now made to Figure 11 which shows a flow chart of a method **23**, according to an embodiment of the present invention.

[0054] In step **1103**, a first image frame **15** is captured, followed by the capture of a second image frame **15** from camera **12** processor **30** of system **16**.

[0055] Optionally, image frames **15** may be warped to compensate for a change in vehicle orientation, i.e. roll, pitch and yaw, which may be determined from image frames **15** or from external sensor(s) connected to driver assistance system **16**.

[0056] The first and the second image frames **15** are then filtered (step **1105)** according to a threshold, e.g. a previously determined threshold, to produce a first dark image patch **1107** of first image frame **15** and a second dark image patch **1111** of the second image frame **15** respectively. First image patch **1107** and optionally second image patch **1111** are analyzed for connectivity of picture elements.

[0057] One or more connected components of first image patch **1107** is tracked (step **1112)** from the first image frame **15** to second dark image patch **1111** of second image frame **15.**

[0058] Tracking step **1113** may be performed by using the expected image motion for road points given host vehicle **18** speed and nearest neighbor.

[0059] The thicknesses of first image patch **1107** and second dark image patch **1111** are measured (step **1113)** in both the first image frame **15** and the second image frame **15.** By way of example, an image strip of twenty pixel columns wide, from the bottom of an image frame **15** and up to the image row corresponding to 80 meters may be analyzed for connected components. The patch or shadow thickness may be computed (step **1113)** by counting the number of pixels in the connected component divided by the strip width in columns (i.e. 20 pixels).

[0060] In decision block **1115,** the thicknesses of candidate shadows **1109** tracked across successive image frames may be accumulated. From the change of thicknesses tracked across successive image frames for first dark image patch **1107** and second dark image patch **1111** it is possible to analyze (step **1117)** if the change of thicknesses is consistent with a shadow cast by an obstacle from illumination from the headlights in order to for instance audibly warn a driver of host vehicle **18** of an obstacle **34** in road **36,** or to apply brakes without driver intervention. First image patch **1107** and second dark image patch **1111** may be shadows of an obstacle from the headlights of vehicle **18** or alternatively a darker road texture unrelated to an obstacle in the road.

[0061] Reference is now made to Figure 12 which shows a graph **1200** of the thickness of shadow **1006** at the far side of speed bump **1002** as a function of distance to speed bump **1002,** according to feature of the present invention. Dots show the results measured in the sequence of frames captured. The curves **1202** (sharp edge) and **1204** (round edge) shown the simulation of a bump 0.1m high for a sharp drop and a smooth drop respectively. The results show that in practice the shadows behave according to the model. Shadow 1006 behaves approximately like Z^{-1} and not Z^{-2}. Shadow **1006** appears to behave like a rounded drop however, further experiments may be required using ground truth from accurately measured road structures.

[0062] Reference is now made to Figures 13a and 13b which show two examples of soft shoulders at the road edge, according to an example of the present invention. The drop between the asphalt and the gravel shoulder, results in a narrow shadow line **1300a** and **1300b** respectively that are darker than both the asphalt or the gravel. Often in country roads the asphalt paved on top of gravel and there is a step transition (drop) from the asphalt to the gravel. The step transition is called a soft shoulder which is a negative obstacle and will also generate a shadow like shadow lines **1300a** and **1300b.** Soft shoulders can thus be detected by looking for a dark strip a few pixels wide at the edge between the dark asphalt and the lighter gravel. The shadow strip will be even darker than the asphalt. The width of shadow lines **1300a** and **1300b** indicate the shoulder drop. These dark shadow lines **1300a** and **1300b** have a unique feature; unlike road markings such as lane marks that get narrower in the image as they approach the horizon, the shadows like **1300a** and **1300b** on road edges stay the same width. On a straight road, the inner edge of the shadow would be a line passing through the vanishing point of the road while the outer edge is a line that passes a few pixels to the side of this vanishing point.

[0063] The term "obstacle" as used herein in reference to a road refers to a "positive obstacle" and a "negative obstacle". The term "positive obstacle" as used herein is an obstacle extends vertically upward in real space above the road surface such as a speed bump or a vertical bump caused by new asphalt paving in the direction of motion of the vehicle. The term "negative obstacle" as used herein extends vertically downward in real space below the road surface such as a hole or a drop in asphalt paving in the direction of motion of the vehicle.

[0064] The term "shape" of an obstacle, as used herein refers to the vertical contour in real space along the direction of motion of the vehicle

[0065] The indefinite articles "a", "an" is used herein, such as "a shadow", an "obstacle" has the meaning of "one or more" that is "one or more shadows" or "one or more obstacles". Although selected embodiments of the present invention have been shown and described, it is to be understood the present invention is not limited to the described features. Instead, it is to be appreciated that changes may be made to these features without departing from the principles and spirit of the invention, the scope of which is defined by the claims and the equivalents thereof.

IPR2025-01035
Tesla EX1002 Page 2757

[0066] The features of the various embodiments described herein may be combined with one another.

[0067] The disclosures in United States patent application numbers US-61/569,306 and US-61/702,755, from which this application claims priority, and in the abstract accompanying this application are incorporated herein by reference.

Claims

1. A computerized method performable at night by a driver assistance system mountable in a host vehicle while the host vehicle is moving forward with headlights on, wherein the driver assistance system includes a camera operatively connectible to a processor, the method including the steps of:

   capturing a first image frame and a second image frame of a road in the field of view of the camera;
   processing said first image frame and said second image frame to locate a first dark image patch of said first image frame and a second dark image patch of said second image frame;
   tracking said first and said second dark image patches from said first image frame to said second image frame as corresponding images of the same portion of the road; and
   measuring respective thicknesses in vertical image coordinates of said first and second dark image patches responsive to said tracking from said first image frame to said second image frame.

2. The method of claim 1, wherein said processing is performed by filtering said first image frame and said second image frame with a threshold value of gray scale to produce said first dark image patch of said first image frame and said second dark image patch of said second image frame, wherein said first dark image patch and said second dark image patch include intensity values less than said threshold value;

3. The method of claim 1 or 2, including the step of:

   prior to said tracking, verifying connectivity of picture elements within said first dark image patch.

4. The method of claim 1, 2 or 3, including the step of:

   determining that a change of said thicknesses between said first and second dark image patches is consistent with a shadow cast by an obstacle in the road from illumination from the headlights, thereby detecting said obstacle in the road.

5. The method of claim 4, including the step of:

   audibly warning a driver of the host vehicle responsive to said detecting said obstacle.

6. The method of claim 4 or 5, including the step of:

   analyzing change in said thicknesses between said first and second image frames, thereby distinguishing between the detected obstacle being a positive or a negative obstacle.

7. The method of claim 4, 5 or 6, including the step of:

   analyzing change in said thicknesses between said first and second image frames, thereby computing a shape of the detected obstacle.

8. The method of any preceding claim, including the step of:

   determining that a change of said thicknesses between said first and second image frames is not consistent with a shadow cast by an obstacle from illumination from the headlights.

9. The method of any preceding claim, including wherein said thicknesses are measured in picture elements according to a total number of picture elements with intensity values less than said threshold divided by a width in picture element columns of said .first and second dark image patches.

10. A driver assistance system including a camera and a processor configured to perform the computerized method,

IPR2025-01035
Tesla EX1002 Page 2758

according to any preceding claim.

11. A driver assistance system mountable in a host vehicle, the driver assistance system includes a camera operatively connectible to a processor, wherein the driver assistance system while the host vehicle is moving is operable to:

capture a first image frame and a second image frame of a road in the field of view of the camera;
process said first image frame and said second image frame to locate a first dark image patch of said first image frame and a second dark image patch of said second image frame;
track said first and second dark image patches from said first image frame to said second image portion of said second image frame as corresponding images of the same portion of the road; and
measure respective thicknesses in vertical image coordinates of said first and second dark image patches responsive to said tracking from said first image frame to said second image frame.

12. The driver assistance system of claim 11, wherein the system is operable to determine that a change of said thicknesses between said first and second dark image patches is consistent with a shadow cast by an obstacle in the road from illumination from the headlights, thereby detecting said obstacle in the road.

13. The driver assistance system of claim 12, wherein the system is operable to analyze change in said thicknesses between said first and second image frames to distinguish between the detected obstacle being a positive or a negative obstacle.

14. The driver assistance system of claim 12 or 13, wherein the system is operable to analyze change in said thicknesses between said first and second image frames to compute a shape of the detected obstacle.

15. The driver assistance system of any one of claims 11 to 14, wherein the system is operable to determine that a change of said thicknesses between said first and second image frames is not consistent with a shadow cast by an obstacle from illumination from the headlights.

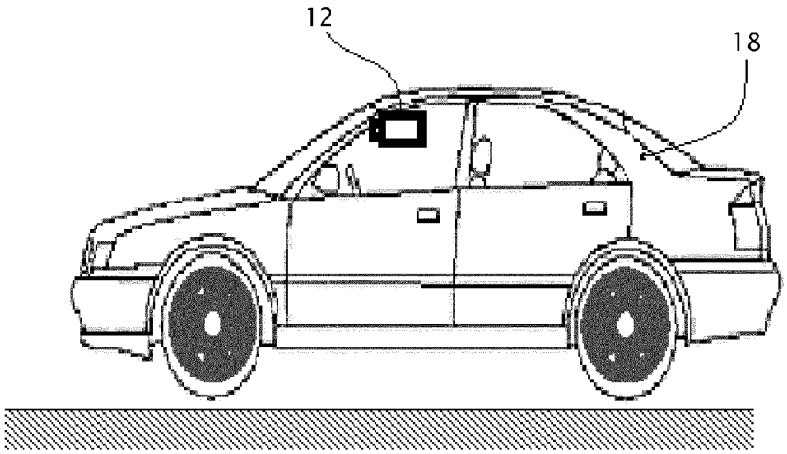
12
18

Fig. 1

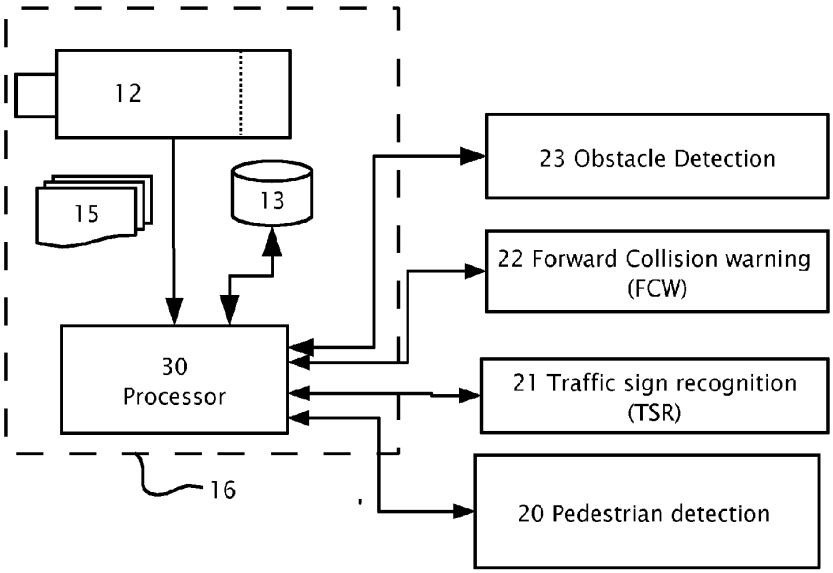
12
15
13
30
Processor
16
23 Obstacle Detection
22 Forward Collision warning (FCW)
21 Traffic sign recognition (TSR)
20 Pedestrian detection

Fig. 2

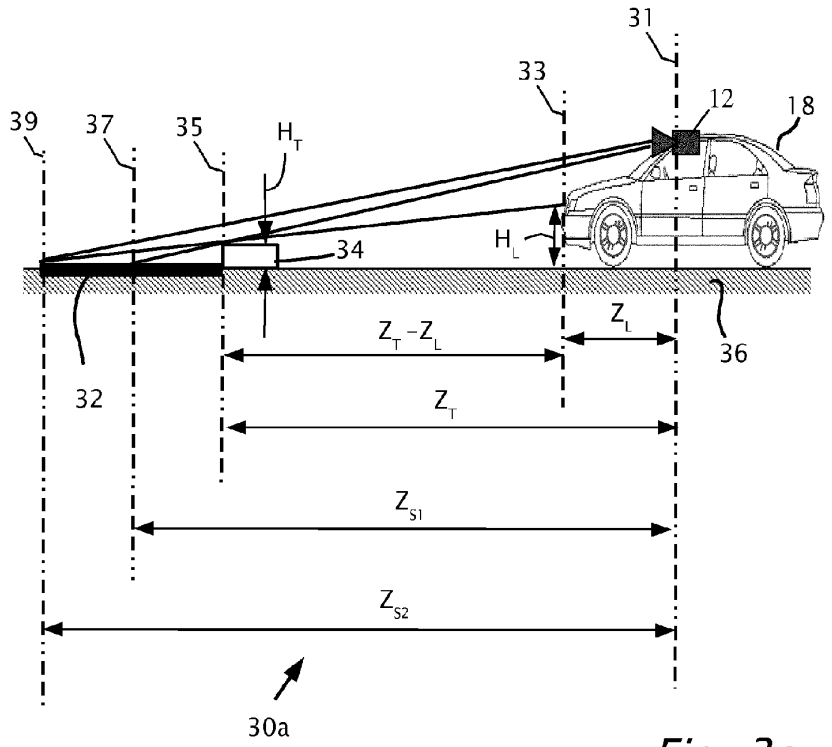
31
33
12
18
39
37
35
H_T
34
H_L
32
36
$Z_T - Z_L$
Z_L
Z_T
Z_{S1}
Z_{S2}
30a

Fig. 3a

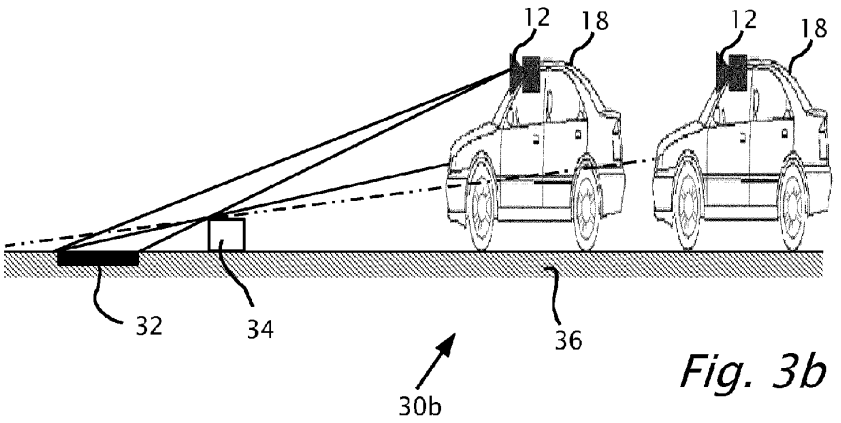
12
18
12
18
32
34
36
30b

Fig. 3b

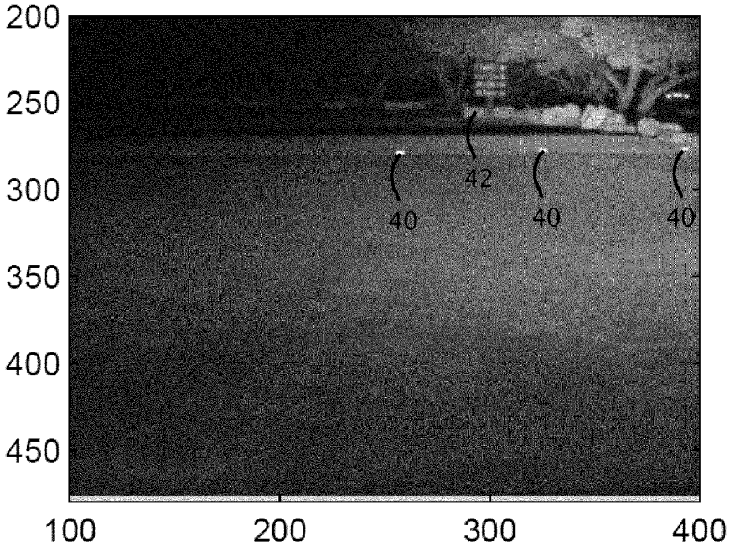
200
250
300
350
400
450
100
200
300
400
40
42
40
40

Fig. 4a

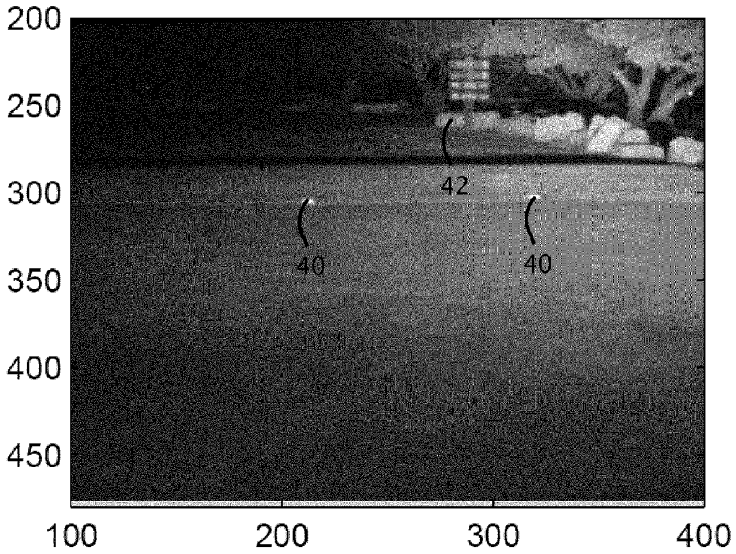
200
250
300
350
400
450
100
200
300
400
42
40
40

Fig. 4b

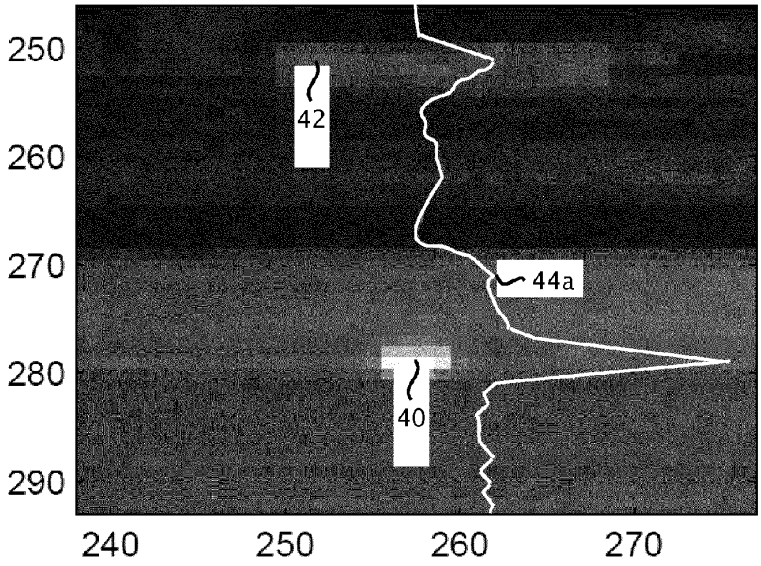
250
260
270
280
290
240
250
260
270
42
44a
40

Fig. 4c

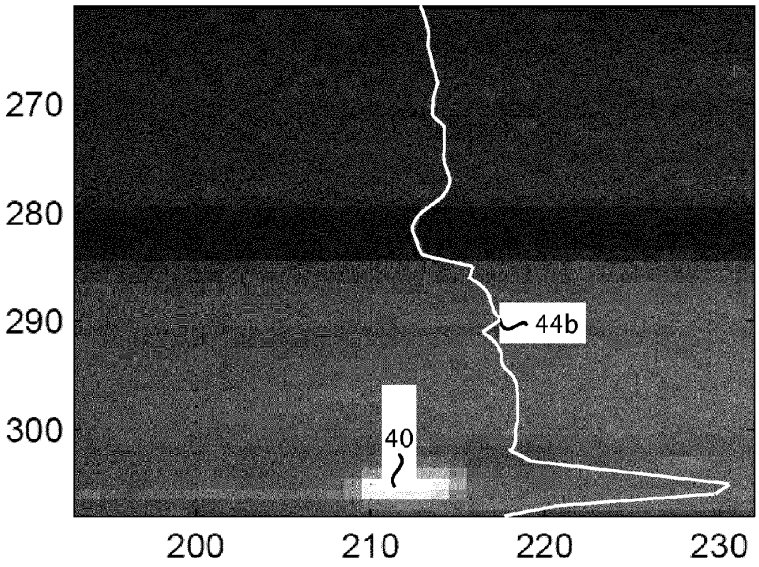
270
280
290
300
200
210
220
230
44b
40

Fig. 4d

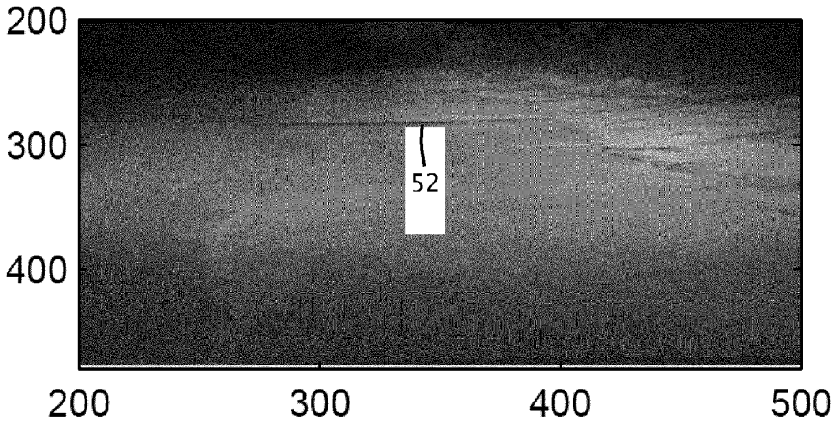

Fig. 5a

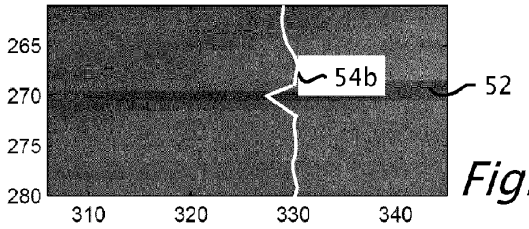

Fig. 5b

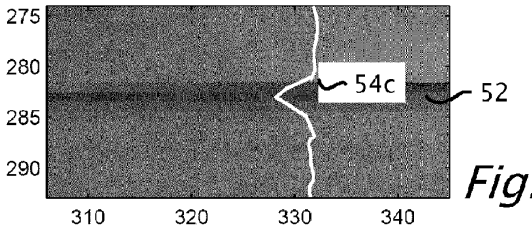

Fig. 5c

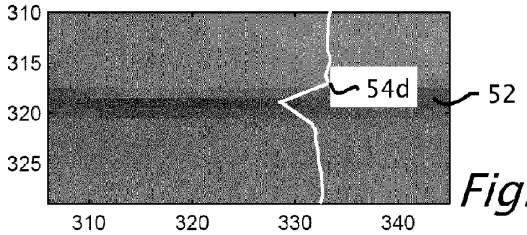

Fig. 5d

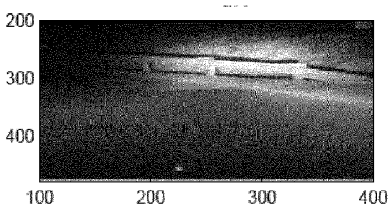

Fig. 6a

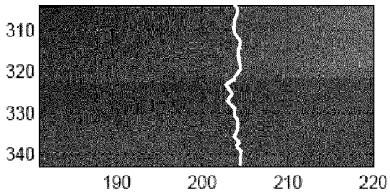

Fig. 6b

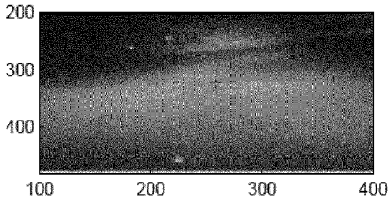

Fig. 6c

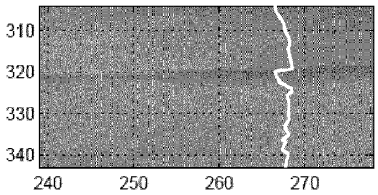

Fig. 6d

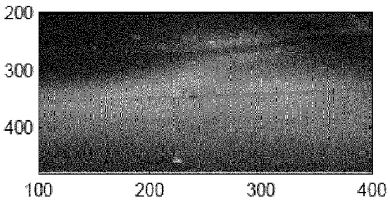

Fig. 6e

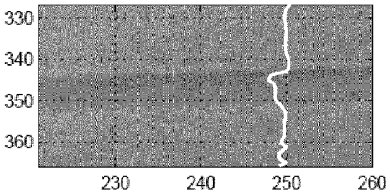

Fig. 6f

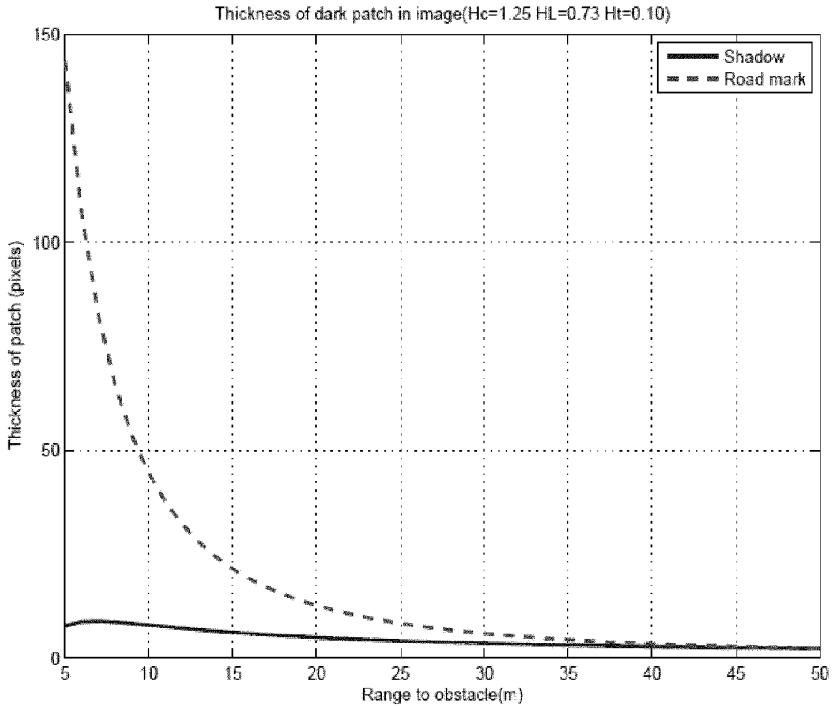
Thickness of dark patch in image(Hc=1.25 HL=0.73 Ht=0.10)
Shadow
Road mark
Thickness of patch (pixels)
Range to obstacle(m)
150
100
50
0
5
10
15
20
25
30
35
40
45
50
70

Fig. 7

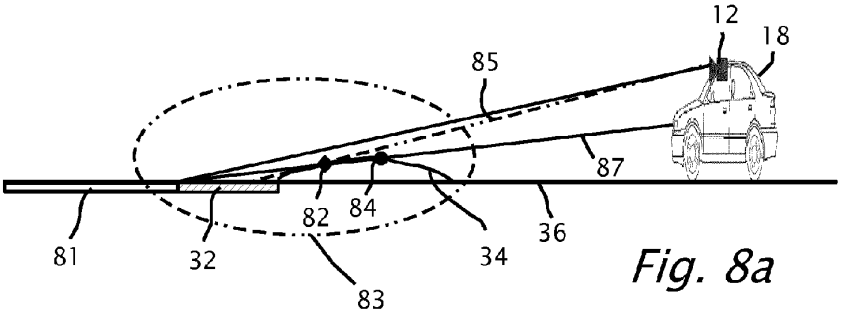

Fig. 8a

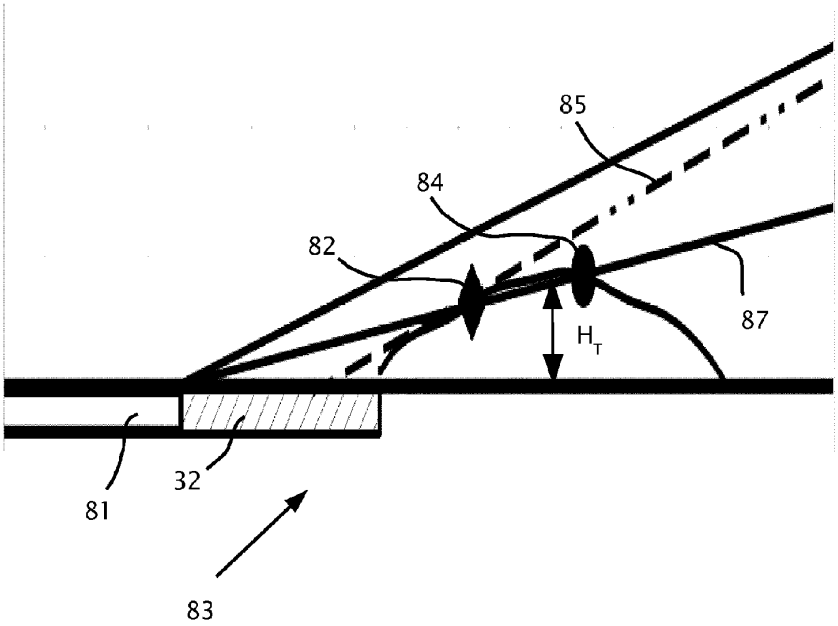

Fig. 8b

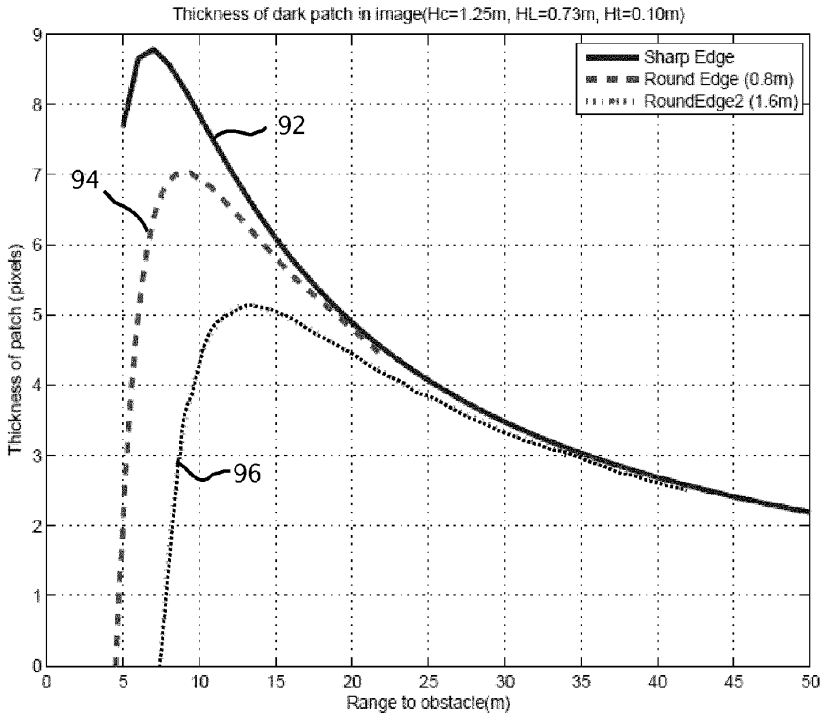
Thickness of dark patch in image(Hc=1.25m, HL=0.73m, Ht=0.10m)
Sharp Edge
Round Edge (0.8m)
RoundEdge2 (1.6m)
92
94
96
Thickness of patch (pixels)
Range to obstacle(m)
0
1
2
3
4
5
6
7
8
9
0
5
10
15
20
25
30
35
40
45
50

Fig. 9

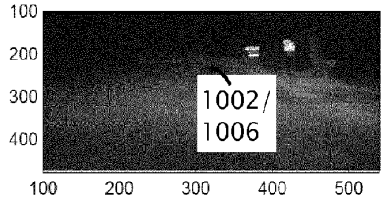

Fig. 10a

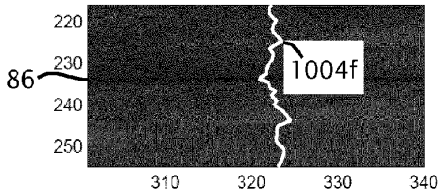

Fig. 10f

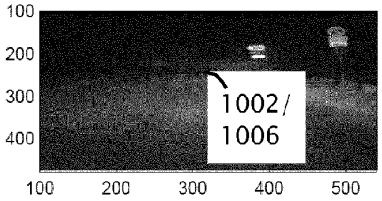

Fig. 10b

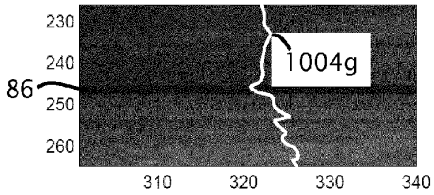

Fig. 10g

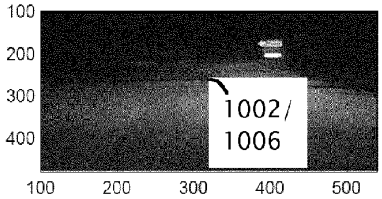

Fig. 10c

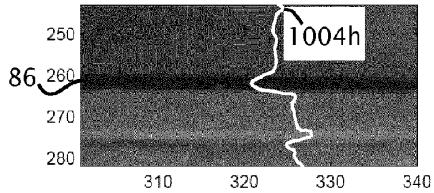

Fig. 10h

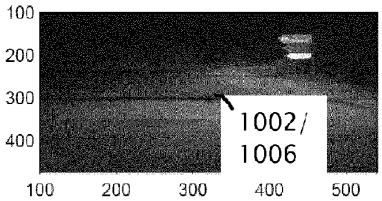

Fig. 10d

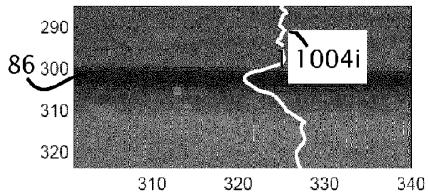

Fig. 10i

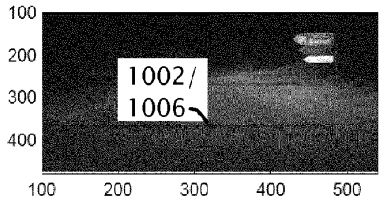

Fig. 10e

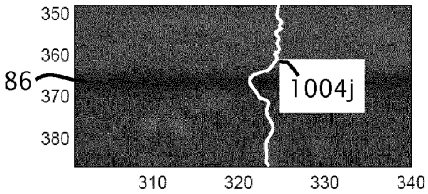

Fig. 10j

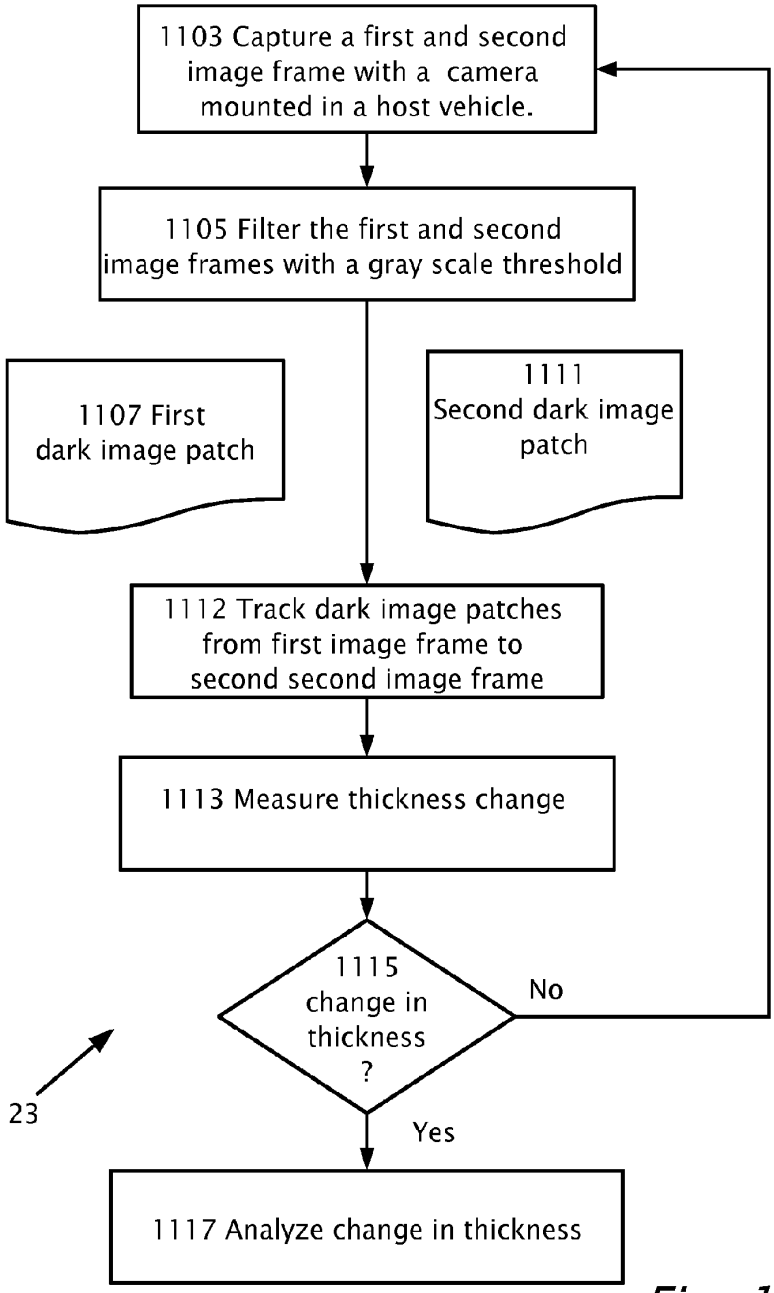
1103 Capture a first and second image frame with a camera mounted in a host vehicle.
1105 Filter the first and second image frames with a gray scale threshold
1107 First dark image patch
1111 Second dark image patch
1112 Track dark image patches from first image frame to second second image frame
1113 Measure thickness change
1115 change in thickness ?
No
Yes
23
1117 Analyze change in thickness

Fig. 11

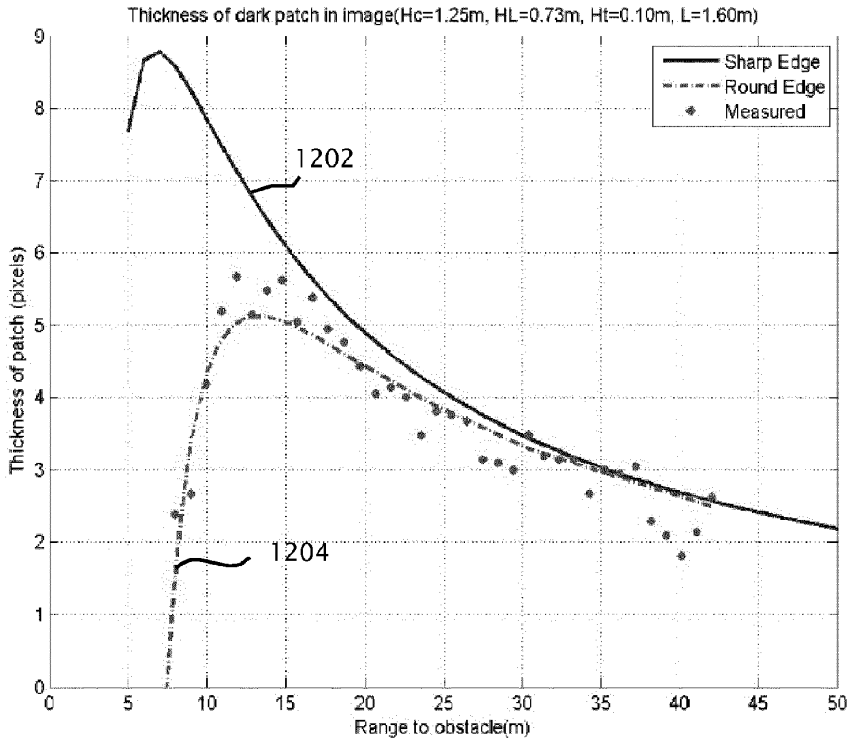
Thickness of dark patch in image(Hc=1.25m, HL=0.73m, Ht=0.10m, L=1.60m)
Sharp Edge
Round Edge
Measured
1202
1204
Thickness of patch (pixels)
Range to obstacle(m)
0
1
2
3
4
5
6
7
8
9
0
5
10
15
20
25
30
35
40
45
50

Fig. 12

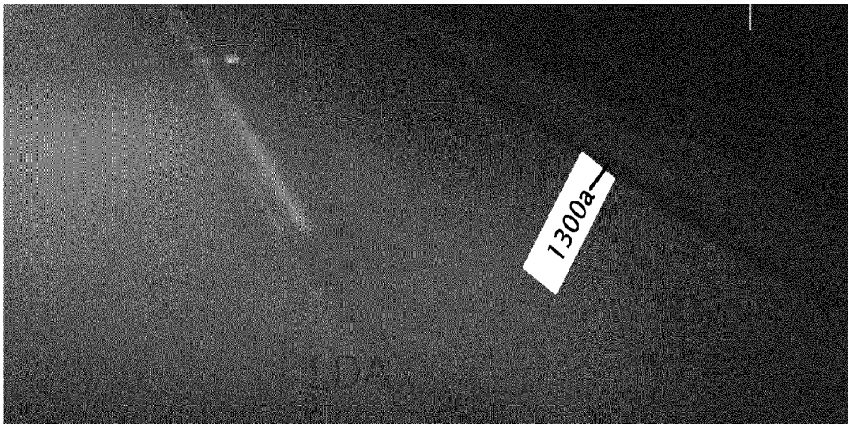

Fig. 13a

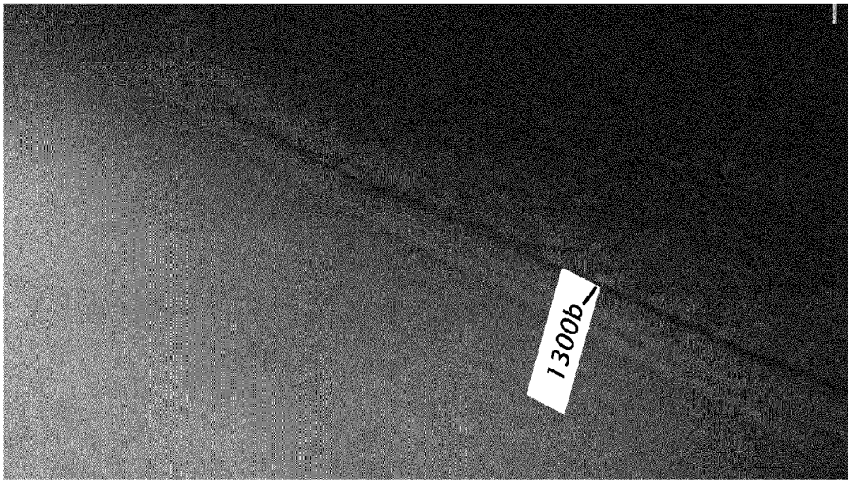

Fig. 13b

REFERENCES CITED IN THE DESCRIPTION

This list of references cited by the applicant is for the reader's convenience only. It does not form part of the European patent document. Even though great care has been taken in compiling the references, errors or omissions cannot be excluded and the EPO disclaims all liability in this regard.

Patent documents cited in the description

- US 61569306 B **[0067]**
- US 61702755 B **[0067]**

Non-patent literature cited in the description

- **LARSON et al.** Lidar based off-road negative obstacle detection and analysis. *14th International IEEE Conference on Intelligent Transportation Systems,* October 2011 **[0003]**
- **BELUTTA et al.** Terrain Perception for Demo III. *Proceedings of the IEEE Intelligent Vehicles Symposium,* October 2000 **[0003]**
- Nighttime negative obstacle detection for off-road autonomous navigation In Unmanned Systems. **RABKIN et al.** Proceedings of the SPIE. 2007, vol. 6561, 656103 **[0003]**
- **MURAKA.** Detecting obstacles and drop-offs using stereo and motion cues for safe local motion. *IEEE/RSJ International Conference on Intelligent Robots and Systems,* September 2008 **[0003]**
- Preliminary investigation into the use of stereo illumination to enhance mobile robot terrain perception. **WITUS et al.** Proc. SPIE Vol. 4364, p. 290-301, Unmanned Ground Vehicle Technology III. vol. 4364, 290-301 **[0003]**

IPR2025-01035
Tesla EX1002 Page 2773

(19) Europäisches Patentamt
European Patent Office
Office européen des brevets

(11) EP 2 605 185 A3

(12) EUROPEAN PATENT APPLICATION

(88) Date of publication A3:
09.07.2014 Bulletin 2014/28

(51) Int Cl.:
G06K 9/00 (2006.01)

(43) Date of publication A2:
19.06.2013 Bulletin 2013/25

(21) Application number: **12275201.7**

(22) Date of filing: **12.12.2012**

(84) Designated Contracting States:
AL AT BE BG CH CY CZ DE DK EE ES FI FR GB GR HR HU IE IS IT LI LT LU LV MC MK MT NL NO PL PT RO RS SE SI SK SM TR
Designated Extension States:
BA ME

(30) Priority: **12.12.2011 US 201161569306 P**
19.09.2012 US 201261702755 P

(71) Applicant: **Mobileye Technologies Limited**
24854 Nicosia (CY)

(72) Inventor: **Stein, Gideon P**
96263 Jerusalem (IL)

(74) Representative: **Jehan, Robert**
Williams Powell
Staple Court
11 Staple Inn Buildings
London, WC1V 7QH (GB)

(54) **Detection of obstacles at night by analysis of shadows**

(57) A driver assistance systems mountable in a host vehicle while the host vehicle is moving forward with headlights on for detection of obstacles based on shadows. The driver assistance system includes a camera (12) operatively connectible to a processor (30). A first image frame and a second image frame are captured of a road. A first dark image patch and a second dark image patch include intensity values less than a threshold value. The first and the second dark image patches are tracked from the first image frame to the second image frame as corresponding images of the same portion of the road. Respective thicknesses in vertical image coordinates are measured of the first and second dark image patches responsive to the tracking.

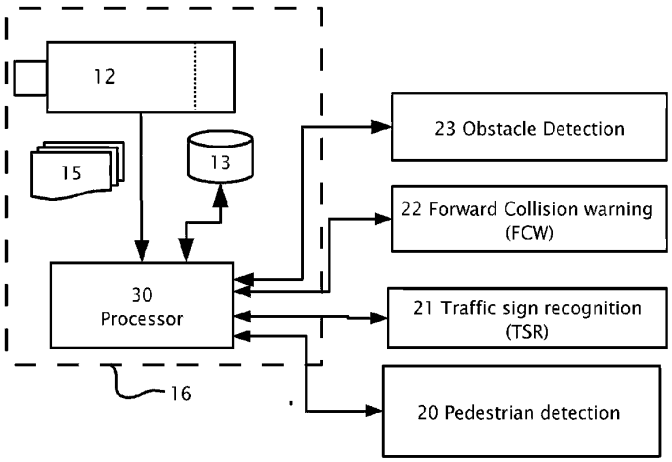

Fig. 2

EP 2 605 185 A3

Printed by Jouve, 75001 PARIS (FR)

Europäisches Patentamt
European Patent Office
Office européen des brevets

EUROPEAN SEARCH REPORT

Application Number
EP 12 27 5201

DOCUMENTS CONSIDERED TO BE RELEVANT

Category	Citation of document with indication, where appropriate, of relevant passages	Relevant to claim	CLASSIFICATION OF THE APPLICATION (IPC)
X A	EP 1 708 125 A1 (VALEO VISION [FR]) 4 October 2006 (2006-10-04) * paragraphs [0008], [0016] * * paragraphs [0018], [0021] - paragraph [0022] * * column 0024 * * paragraph [0026] - paragraph [0027] * * claim 18 * -----	1-3,9-11 4-8, 12-15	INV. G06K9/00
A	HU TINGBO ET AL: "Negative obstacle detection from image sequences", THIRD INTERNATIONAL CONFERENCE ON DIGITAL IMAGE PROCESSING (ICDIP 2011), SPIE, 1000 20TH ST. BELLINGHAM WA 98225-6705 USA, vol. 8009, no. 1, 15 April 2011 (2011-04-15), pages 1-7, XP060015478, DOI: 10.1117/12.896288 [retrieved on 1901-01-01] * sections 2-3 * -----	1-15	

TECHNICAL FIELDS SEARCHED (IPC)
G06K

The present search report has been drawn up for all claims

Place of search	Date of completion of the search	Examiner
The Hague	30 May 2014	Kollreider, Klaus

CATEGORY OF CITED DOCUMENTS

X : particularly relevant if taken alone
Y : particularly relevant if combined with another document of the same category
A : technological background
O : non-written disclosure
P : intermediate document

T : theory or principle underlying the invention
E : earlier patent document, but published on, or after the filing date
D : document cited in the application
L : document cited for other reasons

& : member of the same patent family, corresponding document

EPO FORM 1503 03.82 (P04C01)

IPR2025-01035
Tesla EX1002 Page 2775

ANNEX TO THE EUROPEAN SEARCH REPORT ON EUROPEAN PATENT APPLICATION NO. EP 12 27 5201

This annex lists the patent family members relating to the patent documents cited in the above-mentioned European search report.
The members are as contained in the European Patent Office EDP file on
The European Patent Office is in no way liable for these particulars which are merely given for the purpose of information.

30-05-2014

Patent document cited in search report	Publication date	Patent family member(s)	Publication date
EP 1708125 A1	04-10-2006	AT 425507 T	15-03-2009
		EP 1708125 A1	04-10-2006
		FR 2883818 A1	06-10-2006
		JP 2006298362 A	02-11-2006
		US 2006222208 A1	05-10-2006

EPO FORM P0459

For more details about this annex : see Official Journal of the European Patent Office, No. 12/82

Electronic Acknowledgement Receipt

EFS ID:	48308116
Application Number:	18222774
International Application Number:	
Confirmation Number:	9586
Title of Invention:	CONTROLLING DRIVING MODES OF SELF-DRIVING VEHICLES
First Named Inventor/Applicant Name:	Michael S. Gordon
Customer Number:	164
Filer:	Ian David MacKinnon
Filer Authorized By:	
Attorney Docket Number:	S0974-P08818US08
Receipt Date:	17-JUL-2023
Filing Date:	
Time Stamp:	17:10:17
Application Type:	Utility under 35 USC 111(a)

Payment information:

Submitted with Payment	no

File Listing:

Document Number	Document Description	File Name	File Size(Bytes)/ Message Digest	Multi Part /.zip	Pages (if appl.)
1	Information Disclosure Statement (IDS) Form (SB08)	2023-07-17_SIDS_S0974-P08818US08_3.pdf	1036411 feade41bff0ca323663cc80b854de00016517ad8	no	8

Warnings:

Information:					
A U.S. Patent Number Citation or a U.S. Publication Number Citation is required in the Information Disclosure Statement (IDS) form for autoloading of data into USPTO systems. You may remove the form to add the required data in order to correct the Informational Message if you are citing U.S. References. If you chose not to include U.S. References, the image of the form will be processed and be made available within the Image File Wrapper (IFW) system. However, no data will be extracted from this form. Any additional data such as Foreign Patent Documents or Non Patent Literature will be manually reviewed and keyed into USPTO systems.					
2	Foreign Reference	ForRef_CA2392578A1.pdf	1383209 d68915dd2f6fad4f6ad885fb72803e92b7c6edc3	no	19
Warnings:					
Information:					
3	Foreign Reference	ForRef_CA2392652A1.pdf	1816902 282b3106c47239fdc65db578cced711ddbb0f350	no	26
Warnings:					
Information:					
4	Foreign Reference	ForRef_CN1135063A_WithAbstract.pdf	1566831 a62c31eeb893bdadb8a4ec82fcc5edebe74ed28f	no	22
Warnings:					
Information:					
5	Foreign Reference	ForRef_CN2349068Y_WithAbstract.pdf	948726 8a3c37186d60180362144c24fbd9782505270f3f	no	16
Warnings:					
Information:					
6	Foreign Reference	ForRef_CN102650882A_WithAbstract.pdf	924585 e8e280ca1a064bb9c7af1e5d26aaf819e63466a7	no	15
Warnings:					
Information:					
7	Foreign Reference	ForRef_CN104900018A_WithAbstract.pdf	446875 e454417a6900fe926e0954dd3cfd3ca5352a7ea5	no	10
Warnings:					
Information:					

8	Foreign Reference	ForRef_CN106030609A_WithAbstract.pdf	16565957 abb6e529b85fea75378c3b7fc0b69c73ec1e034b	no	205
Warnings:					
Information:					
9	Foreign Reference	ForRef_CN106462727A_WithAbstract.pdf	17065117 1fd6f93223b361f15122ded3d70ad8977107f632	no	195
Warnings:					
Information:					
10	Foreign Reference	ForRef_CN107111742A_WithAbstract.pdf	10206592 5cf2d15bbcedede032a020fae431bb8f03a95638	no	129
Warnings:					
Information:					
11	Foreign Reference	ForRef_CN110920609A_WithAbstract.pdf	16019252 9406979a241743e8932d1b6e64c37be832c2b142	no	201
Warnings:					
Information:					
12	Foreign Reference	ForRef_CN201004265Y_WithAbstract.pdf	754502 9b5a899e283dfd60c6a9fc6f46a4b723a2aff5ad	no	12
Warnings:					
Information:					
13	Foreign Reference	ForRef_CN202012052U_WithAbstract.pdf	473239 86553318d98ef17c65cdd944fd6389f6dfa72a55	no	10
Warnings:					
Information:					
14	Foreign Reference	ForRef_CN202038228U_WithAbstract.pdf	708886 b7da6e32fb89588281e475d914f4591ab4be844d	no	13
Warnings:					
Information:					

15	Foreign Reference	ForRef_CN202772924U_WithAbstract.pdf	1207760 ca82eb34d55f268955a02c7d425a5db913d93aec	no	16
Warnings:					
Information:					
16	Foreign Reference	ForRef_EP0582236B1.pdf	2560066 43461638a01db71764becdc044f79ba02fb79852	no	19
Warnings:					
Information:					
17	Foreign Reference	ForRef_EP1236126A1.pdf	342571 2d9ddd23827348379a60d812420486a92e886d2e	no	12
Warnings:					
Information:					
18	Foreign Reference	ForRef_EP1257971A2.pdf	344315 a82fe30c63ff66abbc9b9ddb91ac2af622804af4	no	16
Warnings:					
Information:					
19	Foreign Reference	ForRef_EP1257971A4.pdf	426791 4b0ab8c844e4fb330195ebfb5d37a2fedac3824c	no	17
Warnings:					
Information:					
20	Foreign Reference	ForRef_EP1622072B1.pdf	7459528 3844776b9c7643d04cc91caa3567f7c65010eec8	no	52
Warnings:					
Information:					
21	Foreign Reference	ForRef_EP1727089A2.pdf	1589603 e5762b7686eb992b6ccf308a62d4bb6e777684be	no	18
Warnings:					
Information:					

22	Foreign Reference	ForRef_EP1727089A3.pdf	174387 92b1734e237da84847896c85dfa26ae27ec7add8	no	3
Warnings:					
Information:					
23	Foreign Reference	ForRef_EP3092599A1.pdf	1157962 98592166db217c2fbeb6247d7fb3aa8b44a892d2	no	89
Warnings:					
Information:					
24	Foreign Reference	ForRef_EP3092599B1.pdf	13271385 29cc90ea04ca145a12726a2d1b899b7099602ef7	no	118
Warnings:					
Information:					
25	Foreign Reference	ForRef_EP3100206A1.pdf	1073936 3d81cc92456f1df7b539434e3d7d74f2406d819b	no	78
Warnings:					
Information:					
26	Foreign Reference	ForRef_EP3108264A2.pdf	694383 dd7b91a3ac0eb92830bfa661f52278b08e2b1623	no	43
Warnings:					
Information:					
27	Foreign Reference	ForRef_EP3143607A.pdf	657179 ad3dd73e326ccd3825608d48c7162dd540ab8912	no	41
Warnings:					
Information:					
28	Foreign Reference	ForRef_EP3146506A2.pdf	731265 8b5e725fcf2f04f43034fa7e27670d3052ef7688	no	48
Warnings:					
Information:					

29	Foreign Reference	ForRef_EP3146506B1.pdf	7305309 aa4b5ffce570b7dd3751e8be91d7a9bd11138dde	no	69
Warnings:					
Information:					
30	Foreign Reference	ForRef_EP3152704A2.pdf	692670 414526b2edaa760dac62cecce01e1a2feb2a665e	no	45
Warnings:					
Information:					
31	Foreign Reference	ForRef_EP3154835A1.pdf	631412 7034a657f6fa0ccbe8fc3264c8222f33a93bb2a4	no	39
Warnings:					
Information:					
32	Foreign Reference	ForRef_EP3183688A1.pdf	821177 2d613817a3dbea42e4bcc64bb9b846d014a48206	no	58
Warnings:					
Information:					
33	Foreign Reference	ForRef_EP3514032A1.pdf	16302556 fcde538c3e49d5e2931987920eb9fd358bbe57c6	no	149
Warnings:					
Information:					
34	Foreign Reference	ForRef_WO2014058263A1_WithAbstract.pdf	2108307 167fcfefb3d9ec21d6e1bb071d4955ca37ec4f34	no	26
Warnings:					
Information:					
35	Foreign Reference	ForRef_WO2014066721A2.pdf	3695871 f605e3be779cd6541d6e78b09a0dd2599a4eb0cb	no	26
Warnings:					
Information:					

36	Foreign Reference	ForRef_WO2014066721A3.pdf	355300 70ac21ebaffa6dcf28d6a0ff2cf540291a58e054	no	16
Warnings:					
Information:					
37	Foreign Reference	ForRef_WO2014147361A1.pdf	2166635 acb0622f12837b0dcd5d067ff502f1b754d5ce5f	no	27
Warnings:					
Information:					
38	Foreign Reference	ForRef_WO2014148975A1.pdf	2078742 f1c24713946a02a74a22b3395925289b941635fa	no	25
Warnings:					
Information:					
39	Foreign Reference	ForRef_WO2014148976A1.pdf	2000267 da92281eb790362d6c508ea999de346f95a6ab0d	no	25
Warnings:					
Information:					
40	Foreign Reference	ForRef_WO2015024616A1_WithAbstract.pdf	8722752 e08fe34a141b6852f8dd52fff030b678d304aa9f	no	106
Warnings:					
Information:					
41	Foreign Reference	ForRef_WO2015056105A1.pdf	5266624 7a79b38bc9a5e6aba4eefb4ad821a030eecbacbe	no	52
Warnings:					
Information:					
42	Foreign Reference	ForRef_WO2015083009A1.pdf	16220732 25171acbe8caf5effc4ffdf289fba846726c0703	no	150
Warnings:					
Information:					

43	Foreign Reference	ForRef_WO2015125022A2.pdf	5842394 ce77a6f78f9302034f67390d125fca4fc677e6fb	no	82
Warnings:					
Information:					
44	Foreign Reference	ForRef_WO2015125022A3.pdf	315184 a9ece58fcc2f0b54a7068eef768ff12337623e44	no	4
Warnings:					
Information:					
45	Foreign Reference	ForRef_WO2015156146A1_WithAbstract.pdf	7490367 8b2f537d2b401e98653a376774e25f01d9cce767	no	105
Warnings:					
Information:					
46	Foreign Reference	ForRef_WO2015186002A2.pdf	7772676 fb77793233db8db1b9b17da672976fce95651df5	no	76
Warnings:					
Information:					
47	Foreign Reference	ForRef_WO2015186002A3.pdf	455683 7c3c0f06b3376b8dba0a5c6b58d9dda39c86d248	no	6
Warnings:					
Information:					
48	Foreign Reference	ForRef_WO2015189847A1.pdf	6661780 af366f2680d68071f58dab34c697c94bd68beac7	no	91
Warnings:					
Information:					
49	Foreign Reference	ForRef_WO2016027270A1.pdf	9939847 7312fc8584719589d3e7a97cbbe995da0cbc1d3d	no	120
Warnings:					
Information:					

50	Foreign Reference	ForRef_EP2605185A2.pdf	3203868 7e27866953456c8d4efebef2a34442d16f3ec7a1	no	25
Warnings:					
Information:					
51	Foreign Reference	ForRef_EP2605185A3.pdf	179230 1409fc47852556c2febf05af3b7370ee699d10bb	no	3
Warnings:					
Information:					
			Total Files Size (in bytes):	211837598	

This Acknowledgement Receipt evidences receipt on the noted date by the USPTO of the indicated documents, characterized by the applicant, and including page counts, where applicable. It serves as evidence of receipt similar to a Post Card, as described in MPEP 503.

New Applications Under 35 U.S.C. 111
If a new application is being filed and the application includes the necessary components for a filing date (see 37 CFR 1.53(b)-(d) and MPEP 506), a Filing Receipt (37 CFR 1.54) will be issued in due course and the date shown on this Acknowledgement Receipt will establish the filing date of the application.
National Stage of an International Application under 35 U.S.C. 371
If a timely submission to enter the national stage of an international application is compliant with the conditions of 35 U.S.C. 371 and other applicable requirements a Form PCT/DO/EO/903 indicating acceptance of the application as a national stage submission under 35 U.S.C. 371 will be issued in addition to the Filing Receipt, in due course.
New International Application Filed with the USPTO as a Receiving Office
If a new international application is being filed and the international application includes the necessary components for an international filing date (see PCT Article 11 and MPEP 1810), a Notification of the International Application Number and of the International Filing Date (Form PCT/RO/105) will be issued in due course, subject to prescriptions concerning national security, and the date shown on this Acknowledgement Receipt will establish the international filing date of the application.

PTO/SB/08a (02-18)
Approved for use through 11/30/2020. OMB 0651-0031
U.S. Patent and Trademark Office; U.S. DEPARTMENT OF COMMERCE

Under the Paperwork Reduction Act of 1995, no persons are required to respond to a collection of information unless it contains a valid OMB control number.

INFORMATION DISCLOSURE STATEMENT BY APPLICANT (Not for submission under 37 CFR 1.99)		
	Application Number	
	Filing Date	
	First Named Inventor	Michael S. Gordon
	Art Unit	
	Examiner Name	
	Attorney Docket Number	S0974-P08818US08

U.S.PATENTS Remove

Examiner Initial*	Cite No	Patent Number	Kind Code[1]	Issue Date	Name of Patentee or Applicant of cited Document	Pages,Columns,Lines where Relevant Passages or Relevant Figures Appear
	1	4665395	A	1987-05-12	VAN	
	2	4908988	A	1990-03-20	YAMAMURA, et al.	
	3	5975791	A	1999-11-02	MCCULLOCH	
	4	6064970	A	2000-05-16	MCMILLAN, et al.	
	5	6201318	B1	2001-03-13	GUILLORY	
	6	6326903	B1	2001-12-04	GROSS, et al.	
	7	6393362	B1	2002-05-21	BURNS	
	8	6502035	B2	2002-12-31	LEVINE	

INFORMATION DISCLOSURE STATEMENT BY APPLICANT (Not for submission under 37 CFR 1.99)	Application Number	
	Filing Date	
	First Named Inventor	Michael S. Gordon
	Art Unit	
	Examiner Name	
	Attorney Docket Number	S0974-P08818US08

	9	6587043	B1	2003-07-01	KRAMER	
	10	6622082	B1	2003-09-16	SCHMIDT, et al.	
	11	6704621	B1	2004-03-09	STEIN, et al.	
	12	6731202	B1	2004-05-04	KLAUS	
	13	6810312	B2	2004-10-26	JAMMU, et al.	
	14	7113867	B1	2006-09-26	STEIN	
	15	7124088	B2	2006-10-17	BAUER, et al.	
	16	7151996	B2	2006-12-19	STEIN	
	17	7580782	B2	2009-08-25	BREED, et al.	
	18	7769544	B2	2010-08-03	BLESENER, et al.	
	19	7877269	B2	2011-01-25	BAUER, et al.	

INFORMATION DISCLOSURE STATEMENT BY APPLICANT (Not for submission under 37 CFR 1.99)	Application Number	
	Filing Date	
	First Named Inventor	Michael S. Gordon
	Art Unit	
	Examiner Name	
	Attorney Docket Number	S0974-P08818US08

	20	7894951	B2	2011-02-22	NORRIS, et al.	
	21	7979173	B2	2011-07-12	BREED	
	22	8031062	B2	2011-10-04	SMITH	
	23	8045455	B1	2011-10-25	AGRONOW, et al.	
	24	8078349	B1	2011-12-13	PRADA, et al.	
	25	8090598	B2	2012-01-03	BAUER, et al.	
	26	8139109	B2	2012-03-20	SCHMIEDEL, et al.	
	27	8140358	B1	2012-03-20	LING, et al.	
	28	8146703	B2	2012-04-03	BAUMANN, et al.	
	29	8152325	B2	2012-04-10	MCDERMOTT	
	30	8180322	B2	2012-05-15	NAKAE, et al.	

INFORMATION DISCLOSURE STATEMENT BY APPLICANT (Not for submission under 37 CFR 1.99)	Application Number	
	Filing Date	
	First Named Inventor	Michael S. Gordon
	Art Unit	
	Examiner Name	
	Attorney Docket Number	S0974-P08818US08

	31	8346480	B2	2013-01-01	TREPAGNIER, et al.	
	32	8352112	B2	2013-01-08	MUDALIGE	
	33	8442854	B2	2013-05-14	LAWTON, et al.	
	34	8466807	B2	2013-06-18	MUDALIGE	
	35	8489434	B1	2013-07-16	OTIS, et al.	
	36	8509982	B2	2013-08-13	MONTEMERLO, et al.	
	37	8583365	B2	2013-11-12	JANG, et al.	
	38	8660734	B2	2014-02-25	ZHU, et al.	
	39	8676466	B2	2014-03-18	MUDALIGE	
	40	8678701	B1	2014-03-25	ALDASEM	
	41	8786461	B1	2014-07-22	DAUDELIN	

INFORMATION DISCLOSURE STATEMENT BY APPLICANT (Not for submission under 37 CFR 1.99)	Application Number	
	Filing Date	
	First Named Inventor	Michael S. Gordon
	Art Unit	
	Examiner Name	
	Attorney Docket Number	S0974-P08818US08

	42	8793046	B2	2014-07-29	LOMBROZO, et al.	
	43	8810392	B1	2014-08-19	TELLER, et al.	
	44	8816857	B2	2014-08-26	NORDIN, et al.	
	45	8825258	B2	2014-09-02	CULLINANE, et al.	
	46	8849494	B1	2014-09-30	HERBACH, et al.	
	47	8874305	B2	2014-10-28	DOLGOV, et al.	
	48	8880270	B1	2014-11-04	FERGUSON, et al.	
	49	8903591	B1	2014-12-02	FERGUSON, et al.	
	50	8923890	B1	2014-12-30	WHITE, et al.	
	51	8924150	B2	2014-12-30	TSIMHONI, et al.	
	52	8948955	B2	2015-02-03	ZHU, et al.	

INFORMATION DISCLOSURE STATEMENT BY APPLICANT (Not for submission under 37 CFR 1.99)		
	Application Number	
	Filing Date	
	First Named Inventor	Michael S. Gordon
	Art Unit	
	Examiner Name	
	Attorney Docket Number	S0974-P08818US08

	53	8949016	B1	2015-02-03	FERGUSON, et al.	
	54	8954217	B1	2015-02-10	MONTEMERLO, et al.	
	55	8954252	B1	2015-02-10	URMSON, et al.	
	56	8954261	B2	2015-02-10	DAS, et al.	
	57	8958943	B2	2015-02-17	BERTOSA, et al.	
	58	8965621	B1	2015-02-24	URMSON, et al.	
	59	8970362	B2	2015-03-03	MORLEY, et al.	
	60	8983705	B2	2015-03-17	ZHU, et al.	
	61	8996224	B1	2015-03-31	HERBACH, et al.	
	62	9014905	B1	2015-04-21	KRETZSCHMAR, et al.	
	63	9020697	B2	2015-04-28	RICCI, et al.	

INFORMATION DISCLOSURE STATEMENT BY APPLICANT (Not for submission under 37 CFR 1.99)	Application Number	
	Filing Date	
	First Named Inventor	Michael S. Gordon
	Art Unit	
	Examiner Name	
	Attorney Docket Number	S0974-P08818US08

	64	9024787	B2	2015-05-05	ALSHINNAWI, et al.	
	65	9082239	B2	2015-07-14	RICCI	
	66	9090260	B2	2015-07-28	CLARKE, et al.	
	67	9120484	B1	2015-09-01	FERGUSON, et al.	
	68	9123049	B2	2015-09-01	HYDE, et al.	
	69	9145116	B2	2015-09-29	CLARKE, et al.	
	70	9150220	B2	2015-10-06	CLARKE, et al.	
	71	9156473	B2	2015-10-13	CLARKE, et al.	
	72	9170327	B2	2015-10-27	CHOE, et al.	
	73	9189897	B1	2015-11-17	STENNETH	
	74	9194168	B1	2015-11-24	LU, et al.	

INFORMATION DISCLOSURE STATEMENT BY APPLICANT (Not for submission under 37 CFR 1.99)	Application Number	
	Filing Date	
	First Named Inventor	Michael S. Gordon
	Art Unit	
	Examiner Name	
	Attorney Docket Number	S0974-P08818US08

	75	9195895	B1	2015-11-24	KAPACH, et al.	
	76	9205835	B2	2015-12-08	STEIN, et al.	
	77	9207323	B2	2015-12-08	ZHU, et al.	
	78	9216745	B2	2015-12-22	BEARDSLEY, et al.	
	79	9218698	B2	2015-12-22	RICCI	
	80	9233688	B2	2016-01-12	CLARKE, et al.	
	81	9248832	B2	2016-02-02	HUBERMAN	
	82	9272709	B2	2016-03-01	BEN SHALOM	
	83	9286520	B1	2016-03-15	LO, et al.	
	84	9297641	B2	2016-03-29	STEIN	
	85	9305411	B2	2016-04-05	RICCI	

INFORMATION DISCLOSURE STATEMENT BY APPLICANT (Not for submission under 37 CFR 1.99)	Application Number	
	Filing Date	
	First Named Inventor	Michael S. Gordon
	Art Unit	
	Examiner Name	
	Attorney Docket Number	S0974-P08818US08

	86	9317033	B2	2016-04-19	IBANEZ-GUZMAN, et al.	
	87	9342074	B2	2016-05-17	DOLGOV, et al.	
	88	9365214	B2	2016-06-14	BEN SHALOM, et al.	
	89	9381915	B1	2016-07-05	CROMBEZ, et al.	
	90	9390451	B1	2016-07-12	SLUSAR	
	91	9393998	B2	2016-07-19	CLARKE, et al.	
	92	9399472	B2	2016-07-26	MINOIU-ENACHE	
	93	9415777	B2	2016-08-16	CLARKE, et al.	
	94	9443163	B2	2016-09-13	SPRINGER	
	95	9446765	B2	2016-09-20	BEN SHALOM, et al.	
	96	9452754	B2	2016-09-27	CLARKE, et al.	

INFORMATION DISCLOSURE STATEMENT BY APPLICANT (Not for submission under 37 CFR 1.99)	Application Number	
	Filing Date	
	First Named Inventor	Michael S. Gordon
	Art Unit	
	Examiner Name	
	Attorney Docket Number	S0974-P08818US08

	97	9454152	B2	2016-09-27	KOPETZ	
	98	9463805	B2	2016-10-11	KIRSCH, et al.	
	99	9483948	B1	2016-11-01	GORDON, et al.	
	100	9552735	B2	2017-01-24	PILUTTI, et al.	
	101	9566958	B2	2017-02-14	WALDMANN	
	102	9566986	B1	2017-02-14	GORDON, et al.	
	103	9628975	B1	2017-04-18	WATKINS, et al.	
	104	9646496	B1	2017-05-09	MILLER	
	105	9650025	B2	2017-05-16	DAGAN	
	106	9650058	B2	2017-05-16	SCHIEK, et al.	
	107	9656673	B2	2017-05-23	CLARKE, et al.	

INFORMATION DISCLOSURE STATEMENT BY APPLICANT (Not for submission under 37 CFR 1.99)	Application Number	
	Filing Date	
	First Named Inventor	Michael S. Gordon
	Art Unit	
	Examiner Name	
	Attorney Docket Number	S0974-P08818US08

	108	9664789	B2	2017-05-30	ROSENBLUM, et al.	
	109	9671243	B2	2017-06-06	STEIN	
	110	9676389	B2	2017-06-13	CLARKE, et al.	
	111	9718468	B2	2017-08-01	BARFIELD, et al.	
	112	9834224	B2	2017-12-05	GORDON, et al.	
	113	9881427	B2	2018-01-30	BARAJAS GONZALEZ, et al.	
	114	10101742	B2	2018-10-16	PROKHOROV	
	115	10150473	B2	2018-12-11	AHARONY, et al.	
	116	10173673	B1	2019-01-08	FERGUSON, et al.	
	117	10293826	B2	2019-05-21	CLARKE, et al.	
	118	10317231	B2	2019-06-11	FERENCZ, et al.	