IN THE UNITED STATES DISTRICT COURT
FOR THE DISTRICT OF DELAWARE

LENOVO (UNITED STATES) INC.,	)	
	)	
Plaintiff,	)	
	)	
v.	)	C.A. No. _____
	)	
GENERAL VIDEO, LLC,	)	
	)	
Defendant.	)	

COMPLAINT FOR DECLARATORY JUDGMENT
OF NON-INFRINGEMENT AND INVALIDITY

Plaintiff Lenovo (United States) Inc. ("Lenovo US") files this Complaint against Defendant General Video, LLC ("Defendant" or "General Video") seeking a declaratory judgment of non-infringement and invalidity as to U.S. Patent Nos. 7,359,437 ("the '437 patent"), 9,036,010 ("the '010 patent"), 9,843,786 ("the '786 patent"), 7,225,282 ("the '282 patent"), 6,584,443 ("the '443 patent"), and 7,069,224 ("the '224 patent") (collectively, the "Patents-in-Suit"). Lenovo US alleges as follows:

THE PARTIES

1. Lenovo US is a corporation organized and existing under the laws of the State of Delaware, with its principal place of business at 8001 Development Drive, Morrisville, North Carolina 27560. Lenovo US imports into and sells in the United States, Lenovo-branded consumer electronics devices including laptops, desktop computers, monitors, and devices that use video/graphics cards.

2. Upon information and belief, General Video is a limited liability company organized and existing under the laws of the State of Delaware, with its principal place of business at 8 The Green, Suite B, Dover, DE 19901. Upon information and belief, General Video may be

served via its registered agent, Northwest Registered Agent Service, Inc., 8 The Green, Suite B, Dover, DE 19901.

3. Upon information and belief, General Video claims to be the assignee of the Patents-in-Suit, and further claims to have the right to recover for past, present, and future infringement of the same.

NATURE OF THE ACTION

4. This is an action arising under the patent laws of the United States, Title 35, United States Code, and the Declaratory Judgment Act, 28 U.S.C. §§ 2201 and 2202, seeking a declaratory judgment of non-infringement and invalidity of the Patents-in-Suit and for such other relief as the Court deems just and proper.

JURISDICTION AND VENUE

5. The Court has subject matter jurisdiction over this action pursuant to 28 U.S.C. §§ 1331 and 1338(a) because this action involves claims arising under the patent laws of the United States, 35 U.S.C. § 1 *et seq.*, and under the Declaratory Judgment Act, 28 U.S.C. §§ 2201 and 2202.

6. An actual and justiciable controversy exists between Lenovo US and General Video as to the non-infringement and invalidity of the Patents-in-Suit. This is true at least because General Video previously initiated a lawsuit against Lenovo Group Limited ("LGL")—a corporate entity and holding company affiliated with Lenovo US—in the Eastern District of Texas. *General Video, LLC v. Lenovo Group Limited*, Case No. 5:24-cv-00122-RWS (E.D. Tex. filed Aug. 30, 2024) (hereinafter, the "*E.D. Tex. Lawsuit*"). General Video did not name Lenovo US as a defendant in that case, but nevertheless alleged that certain Lenovo US products infringed the Patents-in-Suit and sought damages and to enjoin Lenovo US from continuing to import and sell

its products in the United States. *E.D. Tex. Lawsuit*, D.I. 1 (Complaint). On August 11, 2025, the Eastern District of Texas court dismissed General Video's claims against LGL from the *E.D. Tex. Lawsuit* without prejudice based on General Video's failure to plead personal jurisdiction as to LGL. *E.D. Tex. Lawsuit*, D.I. 104 (Order Granting LGL's Motion to Dismiss).

7. This Court has personal jurisdiction over General Video because it is a Delaware entity organized under the laws of the State of Delaware.

8. Upon information and belief, venue is proper for this proceeding in this judicial district at least under 28 U.S.C. § 1391 because General Video, as a Delaware entity organized under the laws of the State of Delaware, resides in this District.

FIRST CLAIM FOR RELIEF

(Declaratory Judgment of Non-Infringement of U.S. Patent No. 7,359,437)

9. Lenovo US incorporates the allegations of each preceding paragraph by reference.

10. U.S. Patent No. 7,359,437 is titled "Encoding method and system for reducing inter-symbol interference effects in transmission over a serial link." A true and correct copy of the '437 patent is attached as Exhibit 1.

11. An actual controversy, within the meaning of 28 U.S.C. §§ 2201 and 2202, exists between Lenovo US and General Video concerning non-infringement of the '437 patent, at least because General Video alleged in the *E.D. Tex. Lawsuit* that Lenovo US's products infringe the '437 patent. *See, e.g.*, *E.D. Tex. Lawsuit*, D.I. 1-19 (Appendix E to General Video's Complaint) (charting General Video's initial infringement allegations regarding the '437 patent). Specifically, General Video alleged that Lenovo US products "that comply with, implement, and/or embody" DisplayPort standards, including Lenovo "desktop computers[,]" "laptop computers[,]" "computer monitors[,]" and "video/graphics cards" infringe the '437 patent. *See, e.g.*, *E.D. Tex. Lawsuit*, D.I.

1 (Complaint) ¶¶ 26, 33, 107. General Video lists hundreds of Lenovo US products as allegedly infringing the ’437 patent. *See, e.g.*, *E.D. Tex. Lawsuit*, D.I. 1-15 (Appendix A to General Video’s Complaint – Accused Lenovo Products).

12. Lenovo US has not, and does not, infringe any claim of the ’437 patent directly or indirectly, either literally or under the doctrine of equivalents. On information and belief, Lenovo US does not infringe the ’437 patent at least because the accused Lenovo US products do not “generat[e] a sequence of selected code words by encoding the input data, wherein each of the selected code words is a member of a robust subset of the full code word set, and the sequence of selected code words is less susceptible to inter-symbol interference during transmission over the link than would be the conventional sequence of code words,” and do not “transmi[t] over the link a first burst of the encoded control words between a first burst of the video code words and the burst of the selected code words, and a second burst of the encoded control words between the burst of the selected code words and a second burst of the video code words” as required by claim 41 of the ’437 patent.

13. Under 28 U.S.C. §§ 2201 and 2202, Lenovo US is entitled to a declaratory judgment that it has not infringed any claim of the ’437 patent.

SECOND CLAIM FOR RELIEF

(Declaratory Judgment of Non-Infringement of U.S. Patent No. 9,036,010)

14. Lenovo US incorporates the allegations of each preceding paragraph by reference.

15. U.S. Patent No. 9,036,010 is titled “Transport of stereoscopic image data over a display interface.” A true and correct copy of the ’010 patent is attached as Exhibit 2.

16. An actual controversy, within the meaning of 28 U.S.C. §§ 2201 and 2202, exists between Lenovo US and General Video concerning non-infringement of the ’010 patent, at least

because General Video alleged in the *E.D. Tex. Lawsuit* that Lenovo US's products infringe the '010 patent. *See, e.g.*, *E.D. Tex. Lawsuit*, D.I. 1-20 (Appendix F to General Video's Complaint) (charting General Video's initial infringement allegations regarding the '010 patent). Specifically, General Video alleged that Lenovo US products "that comply with, implement, and/or embody" DisplayPort standards, including Lenovo "desktop computers[,]" "laptop computers[,]" "computer monitors[,]" and "video/graphics cards" infringe the '010 patent. *See, e.g.*, *E.D. Tex. Lawsuit*, D.I. 1 (Complaint) ¶¶ 26, 33, 122. General Video lists hundreds of Lenovo US products as allegedly infringing the '010 patent. *See, e.g.*, *E.D. Tex. Lawsuit*, D.I. 1-15 (Appendix A to General Video's Complaint – Accused Lenovo Products).

17. Lenovo US has not, and does not, infringe any claim of the '010 Patent directly or indirectly, either literally or under the doctrine of equivalents. On information and belief, Lenovo US does not infringe the '010 patent at least because the accused Lenovo US products do not include "a digital display interface part, for use in a first audio-visual device, for supporting a digital display interface between the first audio-visual device and a second audio-visual device" and "a formatter arranged to format the data for transport over the interface, wherein the formatter, in accordance with signal information received from the second audio-device, is operable in: . . . a second mode to generate a stream of second data elements which carry a multiplexed combination of components of a stereoscopic image, wherein said components of said stereoscopic image elements being transmitted in a first portion of said interface and in a second portion of said interface, each of said first portion and said second portion having a lesser data carrying capacity than said known data carrying capacity and a combined data carrying capacity no greater than said known data carrying capacity" as required by claim 1 of the '010 patent, and do not include "a digital display interface part for use in an audio-visual device, said interface part supporting a

digital display interface having a known data carrying capacity between the audio-visual device and a second audio-visual device" and "a processor arranged to extract said image data, the processor being operable, in accordance with capabilities of said second audio-visual device, wherein . . . in a second mode, the processor demultiplexes components of a stereoscopic image from a stream of second data elements which carry a multiplexed combination of components of a stereoscopic image, wherein said components of said stereoscopic image data elements being transmitted in a first portion of said interface and in a second portion of said interface, each of said first portion and said second portion having a lesser data carrying capacity than said known data carrying capacity and a combined data carrying capacity no greater than said known data carrying capacity" as required by claim 12 of the '010 patent.

18. Under 28 U.S.C. §§ 2201 and 2202, Lenovo US is entitled to a declaratory judgment that it has not infringed any claim of the '010 patent.

THIRD CLAIM FOR RELIEF

(Declaratory Judgment of Non-Infringement of U.S. Patent No. 9,843,786)

19. Lenovo US incorporates the allegations of each preceding paragraph by reference.

20. U.S. Patent No. 9,843,786 is titled "Transport of stereoscopic image data over a display interface." A true and correct copy of the '786 patent is attached as Exhibit 3.

21. An actual controversy, within the meaning of 28 U.S.C. §§ 2201 and 2202, exists between Lenovo US and General Video concerning non-infringement of the '786 patent, at least because General Video alleged in the *E.D. Tex. Lawsuit* that Lenovo US's products infringe the '786 patent. *See, e.g.*, *E.D. Tex. Lawsuit*, D.I. 1-21 (Appendix G to General Video's Complaint) (charting General Video's initial infringement allegations regarding the '786 patent, which were later supplemented to add claim 13). Specifically, General Video alleged that Lenovo US products

"that comply with, implement, and/or embody" DisplayPort standards, including Lenovo "desktop computers[,]" "laptop computers[,]" "computer monitors[,]" and "video/graphics cards" infringe the '786 patent. *See, e.g.*, *E.D. Tex. Lawsuit*, D.I. 1 (Complaint) ¶¶ 26, 33, 130. General Video lists hundreds of Lenovo US products allegedly infringing the '786 patent. *See, e.g.*, *E.D. Tex. Lawsuit*, D.I. 1-15 (Appendix A to General Video's Complaint – Accused Lenovo Products).

22. Lenovo US has not, and does not, infringe any claim of the '786 Patent directly or indirectly, either literally or under the doctrine of equivalents. On information and belief, Lenovo US does not infringe the '786 patent at least because the accused Lenovo US products do not include "[a]n interface part for a digital display, for use in a first audio-visual device for supporting a digital display transmission interface between the first audio-visual device and a second audio-visual device" and "a formatter configured to format the received digital data for transport over a transmission interface, wherein the formatter is operable in: . . . a second mode, different from the first mode, operating at different times than the first mode, in which the formatter generates a stream of second data elements comprising a multiplexed combination of components of a stereoscopic image" as required by claim 1 of the '786 patent, and do not include "[a]n interface part for a digital display, for use in an audio-visual device for supporting a digital display transmission interface between a first audio-visual device and a second audio-visual device" and "a processor arranged to extract image data, the processor being operable in: . . . a second mode, different from the first mode, operating at different times than the first mode, in which the processor de-multiplexes components of a stereoscopic image from a stream of second data elements comprising a multiplexed combination of components of a stereoscopic image" as required by claim 13 of the '786 patent.

23. Under 28 U.S.C. §§ 2201 and 2202, Lenovo US is entitled to a declaratory judgment that it has not infringed any claim of the ’786 patent.

FOURTH CLAIM FOR RELIEF

(Declaratory Judgment of Non-Infringement of U.S. Patent No. 7,225,282)

24. Lenovo US incorporates the allegations of each preceding paragraph by reference.

25. U.S. Patent No. 7,225,282 is titled “Method and apparatus for a two-wire serial command bus interface.” A true and correct copy of the ’282 patent is attached as Exhibit 4.

26. An actual controversy, within the meaning of 28 U.S.C. §§ 2201 and 2202, exists between Lenovo US and General Video concerning non-infringement of the ’282 patent, at least because General Video alleged in the *E.D. Tex. Lawsuit* that Lenovo US’s products infringe the ’282 patent. *See, e.g.*, *E.D. Tex. Lawsuit*, D.I. 1-18 (Appendix D to General Video’s Complaint) (charting General Video’s initial infringement allegations regarding the ’282 patent). Specifically, General Video alleged that Lenovo US products “that comply with, implement, and/or embody” DisplayPort standards, including Lenovo “desktop computers[,]” “laptop computers[,]” “computer monitors[,]” and “video/graphics cards” infringe the ’282 patent. *See, e.g.*, *E.D. Tex. Lawsuit*, D.I. 1 (Complaint) ¶¶ 26, 33, 92. General Video lists hundreds of Lenovo US products as allegedly infringing the ’282 patent. *See, e.g.*, *E.D. Tex. Lawsuit*, D.I. 1-15 (Appendix A to General Video’s Complaint – Accused Lenovo Products).

27. Lenovo US has not, and does not, infringe any claim of the ’282 patent directly or indirectly, either literally or under the doctrine of equivalents. On information and belief, Lenovo US does not infringe the ’282 patent at least because the accused Lenovo US products do not implement “re-mapping a data signal and a clock signal from a first local bus on the source into a different protocol signal,” “transmitting the different protocol signal from the source to the sink

over the two-wire interface," "re-mapping the different protocol signal back into the data signal and the clock signal for use on a second local bus on the sink," "re-mapping the data signal and the clock signal from the second local bus into the different protocol signal," and "transmitting the different protocol signal from the sink to the source over the two-wire interface" as required by claim 1 of the '282 patent.

28. Under 28 U.S.C. §§ 2201 and 2202, Lenovo US is entitled to a declaratory judgment that it has not infringed any claim of the '282 patent.

FIFTH CLAIM FOR RELIEF

(Declaratory Judgment of Non-Infringement of U.S. Patent No. 6,584,443)

29. Lenovo US incorporates the allegations of each preceding paragraph by reference.

30. U.S. Patent No. 6,584,443 is titled "Apparatus and method for audio data/audio-related information transfer." A true and correct copy of the '443 patent is attached as Exhibit 5.

31. An actual controversy, within the meaning of 28 U.S.C. §§ 2201 and 2202, exists between Lenovo US and General Video concerning non-infringement of the '443 patent, at least because General Video alleged in the *E.D. Tex. Lawsuit* that Lenovo US's products infringe the '443 patent. *See, e.g.*, *E.D. Tex. Lawsuit*, D.I. 1-16 (Appendix B to General Video's Complaint) (charting General Video's initial infringement allegations regarding the '443 patent). Specifically, General Video alleged that Lenovo US products "that comply with, implement, and/or embody" DisplayPort standards, including Lenovo "desktop computers[,]" "laptop computers[,]" "computer monitors[,]" and "video/graphics cards" infringe the '443 patent. *See, e.g.*, *E.D. Tex. Lawsuit*, D.I. 1 (Complaint) ¶¶ 26, 33, 60. General Video lists hundreds of Lenovo US products as allegedly infringing the '443 patent. *See, e.g.*, *E.D. Tex. Lawsuit*, D.I. 1-15 (Appendix A to General Video's Complaint – Accused Lenovo Products).

32. Lenovo US has not, and does not, infringe any claim of the ’443 patent directly or indirectly, either literally or under the doctrine of equivalents. On information and belief, Lenovo US does not infringe any claims of the ’443 patent at least because the accused Lenovo US products do not perform a method capable of “a transmission step of transmitting the audio data and audio-related information associated with the audio data; and a reception step of receiving the audio data and the audio-related information, wherein the audio-related information includes monitor information indicating whether or not the audio data is capable of being monitored in the reception step” as required by claims 7 and 9 of the ’443 patent.

33. Under 28 U.S.C. §§ 2201 and 2202, Lenovo US is entitled to a declaratory judgment that it has not infringed any claim of the ’443 patent.

SIXTH CLAIM FOR RELIEF

(Declaratory Judgment of Non-Infringement of U.S. Patent No. 7,069,224)

34. Lenovo US incorporates the allegations of each preceding paragraph by reference.

35. U.S. Patent No. 7,069,224 is titled “Receiver for receiving audio data and audio-related information.” A true and correct copy of the ’224 patent is attached as Exhibit 6.

36. An actual controversy, within the meaning of 28 U.S.C. §§ 2201 and 2202, exists between Lenovo US and General Video concerning non-infringement of the ’224 patent, at least because General Video alleged in the *E.D. Tex. Lawsuit* that Lenovo US’s products infringe the ’224 patent. *See, e.g.*, *E.D. Tex. Lawsuit*, D.I. 1-17 (Appendix C to General Video’s Complaint) (charting General Video’s initial infringement allegations regarding the ’224 patent). Specifically, General Video alleged that Lenovo US products “that comply with, implement, and/or embody” DisplayPort standards, including Lenovo “desktop computers[,]” “laptop computers[,]” “computer monitors[,]” and “video/graphics cards” infringe the ’224 patent. *See, e.g.*, *E.D. Tex. Lawsuit*, D.I.

1 (Complaint) ¶¶ 26, 33, 75. General Video lists hundreds of Lenovo US products as allegedly infringing the ’224 patent. *See, e.g.*, *E.D. Tex. Lawsuit*, D.I. 1-15 (Appendix A to General Video’s Complaint – Accused Lenovo Products).

37. Lenovo US has not, and does not, infringe any claim of the ’224 patent directly or indirectly, either literally or under the doctrine of equivalents. On information and belief, Lenovo US does not infringe any claims of the ’224 patent at least because the accused Lenovo US products do not have “an analysis section operable to determine whether or not the audio data is capable of being monitored by the receiver, wherein the audio-related information includes monitor information indicating whether or not the audio data is capable of being monitored by the receiver, and the analysis section determines whether or not the audio data is capable of being monitored by the receiver based on the monitor information.” as required by claims 3 and 5 of the ’224 patent.

38. Under 28 U.S.C. §§ 2201 and 2202, Lenovo US is entitled to a declaratory judgment that it has not infringed any claim of the ’224 patent.

SEVENTH CLAIM FOR RELIEF

(Declaratory Judgment of Invalidity of U.S. Patent No. 7,359,437)

39. Lenovo US incorporates the allegations of each preceding paragraph by reference.

40. The claims of the ’437 patent are invalid under 35 U.S.C. § 101 because the claims are directed to an abstract idea or other ineligible subject matter and lack an inventive concept or something more than the abstract idea that transforms the claims into a patent-eligible application.

41. The claims of the ’437 patent are invalid under 35 U.S.C. § 102 because the claims lack novelty, and are anticipated, taught, and/or suggested by the prior art.

42. The claims of the ’437 patent are invalid under 35 U.S.C. § 103 because the claims are obvious in view of the prior art.

43. The claims of the ’437 patent are invalid for failure to satisfy the conditions set forth in 35 U.S.C. § 112, including failure of written description, lack of enablement, and claim indefiniteness.

44. Lenovo US adopts and incorporates by reference, as if set forth herein, each of the contentions, charts, prior art references, and other statements made or disclosed in Invalidity Contentions from the *E.D. Tex. Lawsuit*, pursuant to Eastern District of Texas Local Patent Rule 3.3. (“P.R. 3-3”), served on General Video on June 23, 2025. Lenovo US further adopts and incorporates by reference, as if set forth herein, each of the contentions, charts, prior art references, and other statements made or disclosed in any post-grant proceedings involving the Patents-in-Suit, including any petition(s) for *inter partes* review and *ex parte* reexamination.

45. Lenovo US reserves the right to identify and rely upon prior art that may be discovered as discovery progresses in this action.

46. Under 28 U.S.C. §§ 2201 and 2202, Lenovo US is entitled to a declaratory judgment that the claims of the ’437 patent are invalid.

EIGHTH CLAIM FOR RELIEF

(Declaratory Judgment of Invalidity of U.S. Patent No. 9,036,010)

47. Lenovo US incorporates the allegations of each preceding paragraph by reference.

48. The claims of the ’010 patent are invalid under 35 U.S.C. § 101 because the claims are directed to an abstract idea or other ineligible subject matter and lack an inventive concept or something more than the abstract idea that transforms the claims into a patent-eligible application.

49. The claims of the ’010 patent are invalid under 35 U.S.C. § 102 because the claims lack novelty, and are anticipated, taught, and/or suggested by the prior art.

50. The claims of the ’010 patent are invalid under 35 U.S.C. § 103 because the claims are obvious in view of the prior art.

51. The claims of the ’010 patent are invalid for failure to satisfy the conditions set forth in 35 U.S.C. § 112, including failure of written description, lack of enablement, and claim indefiniteness.

52. Lenovo US adopts and incorporates by reference, as if set forth herein, each of the contentions, charts, prior art references, and other statements made or disclosed in Invalidity Contentions from the *E.D. Tex. Lawsuit*, pursuant to Eastern District of Texas Local Patent Rule 3.3. (“P.R. 3-3”), served on General Video on June 23, 2025. Lenovo US further adopts and incorporates by reference, as if set forth herein, each of the contentions, charts, prior art references, and other statements made or disclosed in any post-grant proceedings involving the Patents-in-Suit, including any petition(s) for *inter partes* review and *ex parte* reexamination.

53. Lenovo US reserves the right to identify and rely upon prior art that may be discovered as discovery progresses in this action.

54. Under 28 U.S.C. §§ 2201 and 2202, Lenovo US is entitled to a declaratory judgment that the claims of the ’010 patent are invalid.

NINTH CLAIM FOR RELIEF

(Declaratory Judgment of Invalidity of U.S. Patent No. 9,843,786)

55. Lenovo US incorporates the allegations of each preceding paragraph by reference.

56. The claims of the ’786 patent are invalid under 35 U.S.C. § 101 because the claims are directed to an abstract idea or other ineligible subject matter and lack an inventive concept or something more than the abstract idea that transforms the claims into a patent-eligible application.

57. The claims of the ’786 patent are invalid under 35 U.S.C. § 102 because the claims lack novelty, and are anticipated, taught, and/or suggested by the prior art.

58. The claims of the ’786 patent are invalid under 35 U.S.C. § 103 because the claims are obvious in view of the prior art.

59. The claims of the ’786 patent are invalid for failure to satisfy the conditions set forth in 35 U.S.C. § 112, including failure of written description, lack of enablement, and claim indefiniteness.

60. Lenovo US adopts and incorporates by reference, as if set forth herein, each of the contentions, charts, prior art references, and other statements made or disclosed in Invalidity Contentions from the *E.D. Tex. Lawsuit*, pursuant to Eastern District of Texas Local Patent Rule 3.3. (“P.R. 3-3”), served on General Video on June 23, 2025. Lenovo US further adopts and incorporates by reference, as if set forth herein, each of the contentions, charts, prior art references, and other statements made or disclosed in any post-grant proceedings involving the Patents-in-Suit, including any petition(s) for *inter partes* review and *ex parte* reexamination.

61. Lenovo US reserves the right to identify and rely upon prior art that may be discovered as discovery progresses in this action.

62. Under 28 U.S.C. §§ 2201 and 2202, Lenovo US is entitled to a declaratory judgment that the claims of the ’786 patent are invalid.

TENTH CLAIM FOR RELIEF

(Declaratory Judgment of Invalidity of U.S. Patent No. 7,225,282)

63. Lenovo US incorporates the allegations of each preceding paragraph by reference.

64. The claims of the ’282 patent are invalid under 35 U.S.C. § 101 because the claims are directed to an abstract idea or other ineligible subject matter and lack an inventive concept or something more than the abstract idea that transforms the claims into a patent-eligible application.

65. The claims of the ’282 patent are invalid under 35 U.S.C. § 102 because the claims lack novelty, and are anticipated, taught, and/or suggested by the prior art.

66. The claims of the ’282 patent are invalid under 35 U.S.C. § 103 because the claims are obvious in view of the prior art.

67. The claims of the ’282 patent are invalid for failure to satisfy the conditions set forth in 35 U.S.C. § 112, including failure of written description, lack of enablement, and claim indefiniteness.

68. Lenovo US adopts and incorporates by reference, as if set forth herein, each of the contentions, charts, prior art references, and other statements made or disclosed in Invalidity Contentions from the *E.D. Tex. Lawsuit*, pursuant to Eastern District of Texas Local Patent Rule 3.3. (“P.R. 3-3”), served on General Video on June 23, 2025. Lenovo US further adopts and incorporates by reference, as if set forth herein, each of the contentions, charts, prior art references, and other statements made or disclosed in any post-grant proceedings involving the Patents-in-Suit, including any petition(s) for *inter partes* review and *ex parte* reexamination.

69. Lenovo US reserves the right to identify and rely upon prior art that may be discovered as discovery progresses in this action.

70. Under 28 U.S.C. §§ 2201 and 2202, Lenovo US is entitled to a declaratory judgment that the claims of the ’282 patent are invalid.

ELEVENTH CLAIM FOR RELIEF

(Declaratory Judgment of Invalidity of U.S. Patent No. 6,584,443)

71. Lenovo US incorporates the allegations of each preceding paragraph by reference.

72. The claims of the ’443 patent are invalid under 35 U.S.C. § 101 because the claims are directed to an abstract idea or other ineligible subject matter and lack an inventive concept or something more than the abstract idea that transforms the claims into a patent-eligible application.

73. The claims of the ’443 patent are invalid under 35 U.S.C. § 102 because the claims lack novelty, and are anticipated, taught, and/or suggested by the prior art.

74. The claims of the ’443 patent are invalid under 35 U.S.C. § 103 because the claims are obvious in view of the prior art.

75. The claims of the ’443 patent are invalid for failure to satisfy the conditions set forth in 35 U.S.C. § 112, including failure of written description, lack of enablement, and claim indefiniteness.

76. Lenovo US adopts and incorporates by reference, as if set forth herein, each of the contentions, charts, prior art references, and other statements made or disclosed in Invalidity Contentions from the *E.D. Tex. Lawsuit*, pursuant to Eastern District of Texas Local Patent Rule 3.3. (“P.R. 3-3”), served on General Video on June 23, 2025. Lenovo US further adopts and incorporates by reference, as if set forth herein, each of the contentions, charts, prior art references, and other statements made or disclosed in any post-grant proceedings involving the Patents-in-Suit, including any petition(s) for *inter partes* review and *ex parte* reexamination.

77. Lenovo US reserves the right to identify and rely upon prior art that may be discovered as discovery progresses in this action.

78. Under 28 U.S.C. §§ 2201 and 2202, Lenovo US is entitled to a declaratory judgment that the claims of the ’443 patent are invalid.

TWELFTH CLAIM FOR RELIEF

(Declaratory Judgment of Invalidity of U.S. Patent No. 7,069,224)

79. Lenovo US incorporates the allegations of each preceding paragraph by reference.

80. The claims of the ’224 patent are invalid under 35 U.S.C. § 101 because the claims are directed to an abstract idea or other ineligible subject matter and lack an inventive concept or something more than the abstract idea that transforms the claims into a patent-eligible application.

81. The claims of the ’224 patent are invalid under 35 U.S.C. § 102 because the claims lack novelty, and are anticipated, taught, and/or suggested by the prior art.

82. The claims of the ’224 patent are invalid under 35 U.S.C. § 103 because the claims are obvious in view of the prior art.

83. The claims of the ’224 patent are invalid for failure to satisfy the conditions set forth in 35 U.S.C. § 112, including failure of written description, lack of enablement, and claim indefiniteness.

84. Lenovo US adopts and incorporates by reference, as if set forth herein, each of the contentions, charts, prior art references, and other statements made or disclosed in Invalidity Contentions from the *E.D. Tex. Lawsuit*, pursuant to Eastern District of Texas Local Patent Rule 3.3. (“P.R. 3-3”), served on General Video on June 23, 2025. Lenovo US further adopts and incorporates by reference, as if set forth herein, each of the contentions, charts, prior art references,

and other statements made or disclosed in any post-grant proceedings involving the Patents-in-Suit, including any petition(s) for *inter partes* review and *ex parte* reexamination.

85. Lenovo US reserves the right to identify and rely upon prior art that may be discovered as discovery progresses in this action.

86. Under 28 U.S.C. §§ 2201 and 2202, Lenovo US is entitled to a declaratory judgment that the claims of the ’224 patent are invalid.

PRAYER FOR RELIEF

WHEREFORE, Lenovo US respectfully prays that the Court enter judgment in its favor and against General Video, as follows:

1. Declaring that Lenovo US has not infringed, and does not infringe, either directly or indirectly, any claim of any of the Patents-in-Suit, either literally or under the doctrine of equivalents;

2. Declaring that the claims of the Patents-in-Suit are invalid;

3. Finding this to be an exceptional case and awarding Lenovo US its costs and attorneys’ fees under 35 U.S.C. § 285; and

4. Awarding and granting Lenovo US such other and further relief as the Court deems just and proper.

DEMAND FOR JURY TRIAL

Lenovo US respectfully requests a jury trial on all issues and matters triable by jury.

MORRIS, NICHOLS, ARSHT & TUNNELL LLP

/s/ Jennifer Ying

Jennifer Ying (#5550)
Cameron P. Clark (#6647)
1201 North Market Street
P.O. Box 1347
Wilmington, DE 19899
(302) 658-9200
jying@morrisnichols.com
cclark@morrisnichols.com

Attorneys for Plaintiff Lenovo (United States) Inc.

August 22, 2025

EXHIBIT 1

US007359437B2

(12) **United States Patent**
Hwang et al.

(10) **Patent No.: US 7,359,437 B2**
(45) **Date of Patent: Apr. 15, 2008**

(54) **ENCODING METHOD AND SYSTEM FOR REDUCING INTER-SYMBOL INTERFERENCE EFFECTS IN TRANSMISSION OVER A SERIAL LINK**

(75) Inventors: **Seung Ho Hwang**, Palo Alto, CA (US); **Jano Banks**, Cupertino, CA (US); **Paul Daniel Wolf**, San Carlos, CA (US); **Eric Lee**, San Jose, CA (US); **Baegin Sung**, Sunnyvale, CA (US); **Albert M. Scalise**, San Jose, CA (US)

(73) Assignee: **Silicon Image, Inc.**, Sunnyvale, CA (US)

(*) Notice: Subject to any disclaimer, the term of this patent is extended or adjusted under 35 U.S.C. 154(b) by 1333 days.

(21) Appl. No.: **10/036,234**

(22) Filed: **Dec. 24, 2001**

(65) **Prior Publication Data**

US 2003/0048851 A1 Mar. 13, 2003

Related U.S. Application Data

(63) Continuation-in-part of application No. 09/954,663, filed on Sep. 12, 2001.

(51) **Int. Cl.**
H04B 1/66 (2006.01)

(52) **U.S. Cl.** **375/240**; 375/240.01; 375/240.23; 375/246; 375/254; 375/296; 348/423.1; 348/470

(58) **Field of Classification Search** 375/219, 375/220, 240, 240.01, 240.23, 244, 246, 375/253, 254, 260, 285, 295, 296, 346, 348; 348/388, 398.1, 423.1, 470, 476, 477, 487
See application file for complete search history.

(56) **References Cited**

U.S. PATENT DOCUMENTS

5,150,211 A 9/1992 Charbonnel et al. 358/143

(Continued)

FOREIGN PATENT DOCUMENTS

WO WO 00/16525 3/2000

OTHER PUBLICATIONS

Goldie, John, "*LVDS based FPD-Link spans industries with Gigabits @ milliwatts!*", National Semiconductor Corporation, Online!, May 1, 2001, pp. 1 to 6, from http://www.national.com/nationaledge/may01/lvds.html.

(Continued)

Primary Examiner—Dac V. Ha
(74) *Attorney, Agent, or Firm*—Girard & Equitz LLP

(57) **ABSTRACT**

A communication system including a transmitter, a receiver, and a serial link, in which encoded data (e.g., encoded video data and encoded auxiliary data) are transmitted from the transmitter to the receiver. The serial link can but need not be a TMDS or TMDS-like link. In typical embodiments, alternating bursts of encoded video data and encoded auxiliary data are transmitted over each of one or more channels of the link. Other aspects of the invention are transmitters for use in encoding data for transmission over a serial link, and methods for sending encoded data over a serial link. In accordance with the invention, the data to be transmitted are encoded using a subset (sometimes referred to as a selected set of code words) of a full set of code words. The selected set of code words is selected such that each stream of encoded data (comprising only such code words) transmitted over a serial link has a bit pattern that is less susceptible to inter-symbol interference ("ISI") during transmission than is the bit pattern determined by a conventionally encoded version of the same data (comprising not only the selected set of code words but also other members of the full set). In general, the best choice for the selected set of code words selected from a full set of binary code words depends on the particular coding implemented by the full set. Typically, the selected set of code words includes words whose serial patterns (during transmission) have fewer contiguous zeros and ones (and thus are less susceptible to ISI during transmission) than do those code words in the full set that are not selected. In preferred embodiments in which the bits of the selected set of code words are transmitted over a serial link as sequences of rising and falling voltage transitions, the bit pattern of each transmitted stream of the selected set of code words implements DC balancing to limit the voltage drift over time.

53 Claims, 5 Drawing Sheets

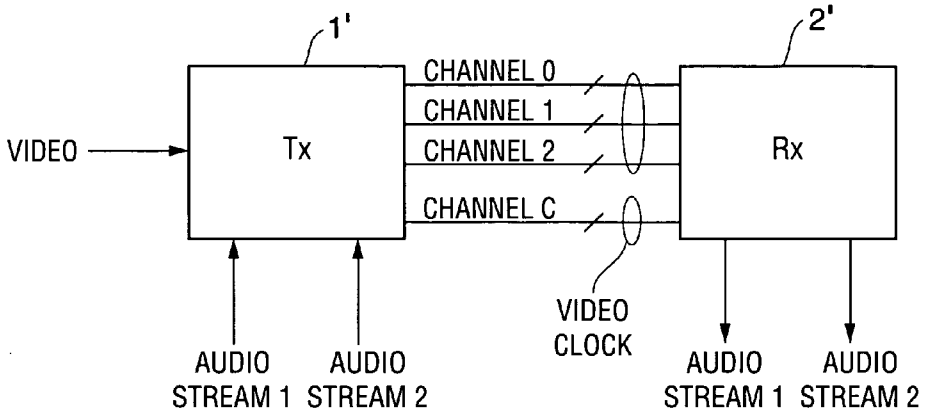

U.S. PATENT DOCUMENTS

5,199,030	A	3/1993	Ueda	370/68
5,491,479	A	2/1996	Wilkinson	341/58
5,506,932	A	4/1996	Holmes et al.	395/2.14
5,523,795	A	6/1996	Ueda	348/480
5,541,662	A	7/1996	Adams et al.	348/460
5,625,644	A *	4/1997	Myers	375/242
5,703,580	A	12/1997	Ko	341/59
5,905,769	A	5/1999	Lee et al.	375/376
5,940,070	A	8/1999	Koo	345/302
5,974,464	A	10/1999	Shin et al.	709/231
6,052,072	A *	4/2000	Tsang et al.	341/59
6,141,691	A	10/2000	Frink et al.	709/233
6,185,250	B1	2/2001	Wang et al.	66/62
6,191,822	B1	2/2001	Smyers	348/552
6,208,715	B1	3/2001	Haavisto	379/88.07
6,241,778	B1	6/2001	de Lind van Wijngaarden et al.	341/58
6,249,669	B1	6/2001	Ogino et al.	455/63
6,301,221	B1 *	10/2001	Paterson	370/208

OTHER PUBLICATIONS

Siegel, P.H., "*Recording Codes For Digital Magnetic Storage*", IEEE Transactions On Magnetics, MAG-21, No. 5, Sep. 1985, pp. 1344-1349.

High-Bandwidth Digital Content Protection System, Revision 1.0, by Intel Corporation, Feb. 17, 2000, pp. 1-60.

High-Bandwidth Digital Content Protection System Revision 1.0 Erratum, by Intel Corporation, Mar. 19, 2001, pp. 1-9.

Upstream Link for High-bandwidth Digital Content Protection, Revision 1.00, by Intel Corporation, Jan. 26, 2001, pp. 1-38.

Lieberman, David "PC Video Interface Looks to Add Audio Capability", *EE Times* (Mar. 26, 2001, 11:57 a.m. EST), pp. 1-3, downloaded from the Internet on May 23, 2001 from http://www.eetimes.com/story/OEG20010326S0029.

Silicon Image, Inc., "*Silicon Image First to Couple Digital Audio and Video on the DVI Link*", Sunnyvale, Jan. 16, 2001, pp. 1-4, downloaded from the Internet on May 22, 2001 from http://www.siimage.com/press/01_16_01.asp.

Silicon Image, Inc., "*CE Industry Heavyweights Proclaim DVI HDCP as the Interface for HDTV-Further Propelling Silicon Image into the CE Space*", Las Vegas, Jan. 4, 2001, pp. 1-4, downloaded from the Internet on May 22, 2001 from http://www.siimage.com/press/01_04_01a.asp.

"White Paper on the MB810 Line Code for 10GbE", Dae Young Kim, Changoo Lee, Chun Sik Shin, Hae Won Jung, and Hyeong Ho Lee, IEEE 802.3 high Speed Study Group, Sep. 1999 Interim meeting, Sep. 29, 1999.

* cited by examiner

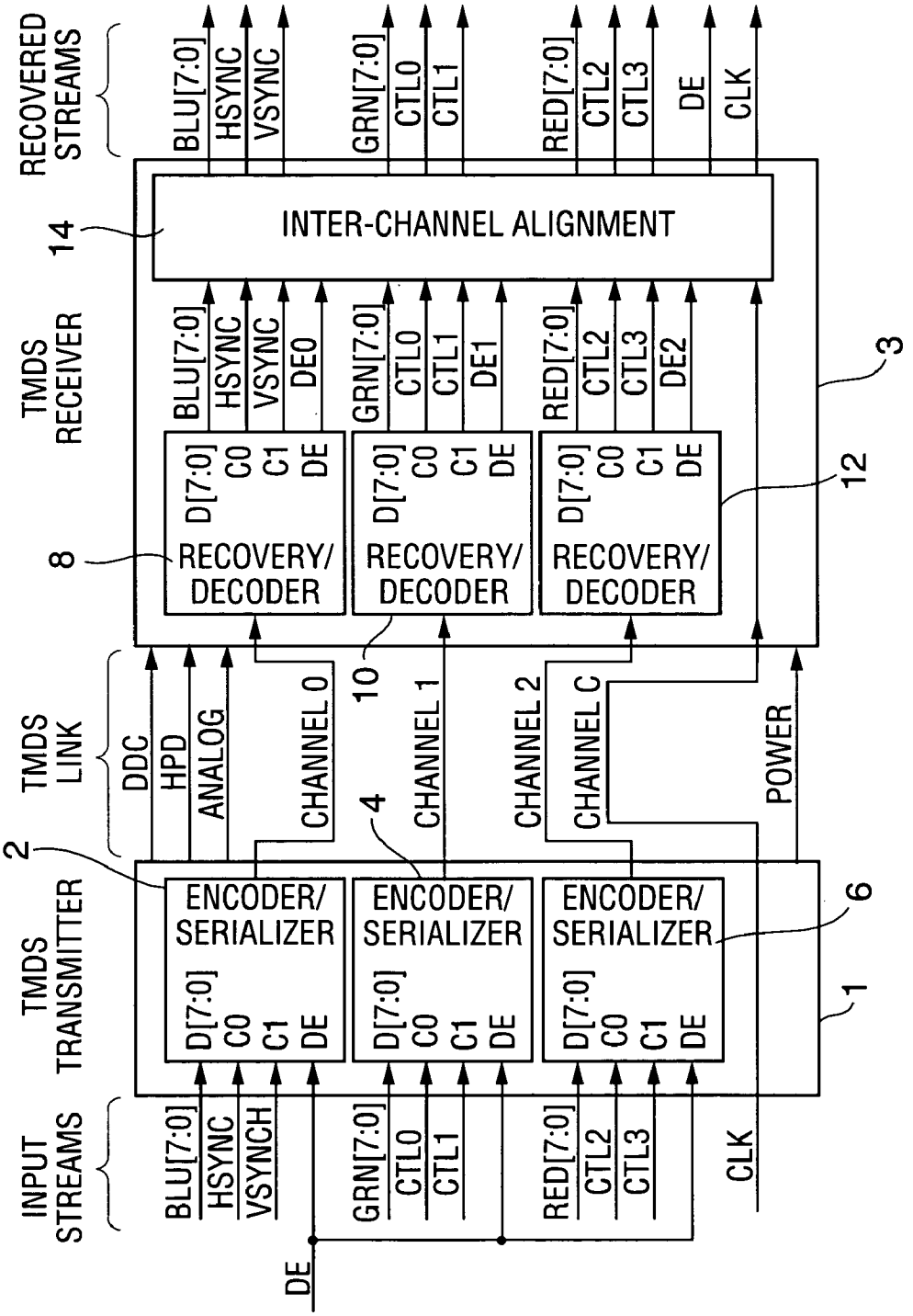

FIG. 1
(PRIOR ART)

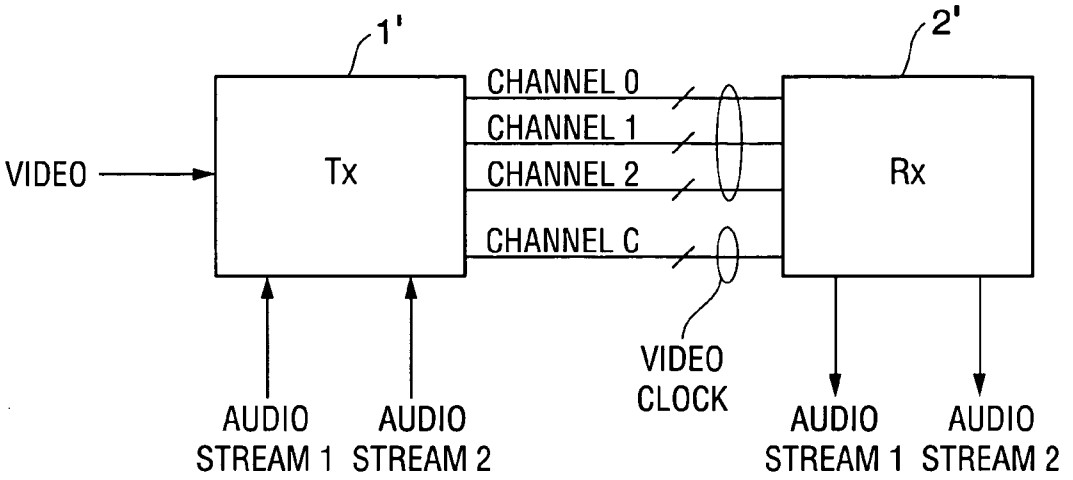

FIG. 2

	Input D7–D0	Hex	TMDS pattern
PRE-DATA GUARD BAND for Aux data	01010101	55	1100110010
AD0	01011011	5B	0011100101
AD1	10110101	B5	0110001101
AD2	11010011	D3	0010011101
AD3	11011001	D9	0100011101
AD4	01101101	6D	0111000101
AD5	10100100	A4	0011100110
AD6	10010010	92	0111000110
AD7	01000100	44	0011110010
AD8	00100010	22	0111100010
AD9	01001011	4B	1001110010
AD10	10010011	93	1000111010
GUARD BAND for video data and POST-DATA GUARD BAND for Aux data (and AD11)	10101011	AB	0011001101
AD12	01011010	5A	1100011001
AD13	01101100	6C	1000111001
AD14	10100101	A5	1100011010
AD15	10111010	BA	1100001101

FIG. 4

Specific CTL	CTL [1:0]	Preamble (q0:q9)	Guardband (q0:q9)	GB (d7:d0)	Purpose
R (CTL [3:2])	00	0010101011	0011001101	0xAB	Video Preamble/Video Guardband/Post-Data Aux Guardband
G (CTL [1:0])	00	0010101011	0011001101	0xAB	Video Preamble/Video Guardband/Post-Data Aux Guardband
B (VSYNC:HSYNC)	XX	1 of 4 values	0011001101	0xAB	Video Preamble/Video Guardband
R (CTL [3:2])	01	1101010100	1100110010	0x55	Aux Preamble/Pre-Data Aux Guardband
G (CTL [1:0])	10	0010101010	1100110010	0x55	Aux Preamble/Pre-Data Aux Guardband
B (VSYNC:HSYNC)	XX	1 of 4 values	1 of 4 values	0x5B, 0xB5, 0xD3, 0xD9	Aux Preamble/Pre- or Post-Data Aux Guardband
R (CTL [3:2])	10	0010101010			VSync Window, HDCP enabled
G (CTL [1:0])	00	0010101011			VSync Window, HDCP enabled
B (VSYNC:HSYNC)	XX	1 of 4 values			VSync Window, HDCP enabled

FIG. 3

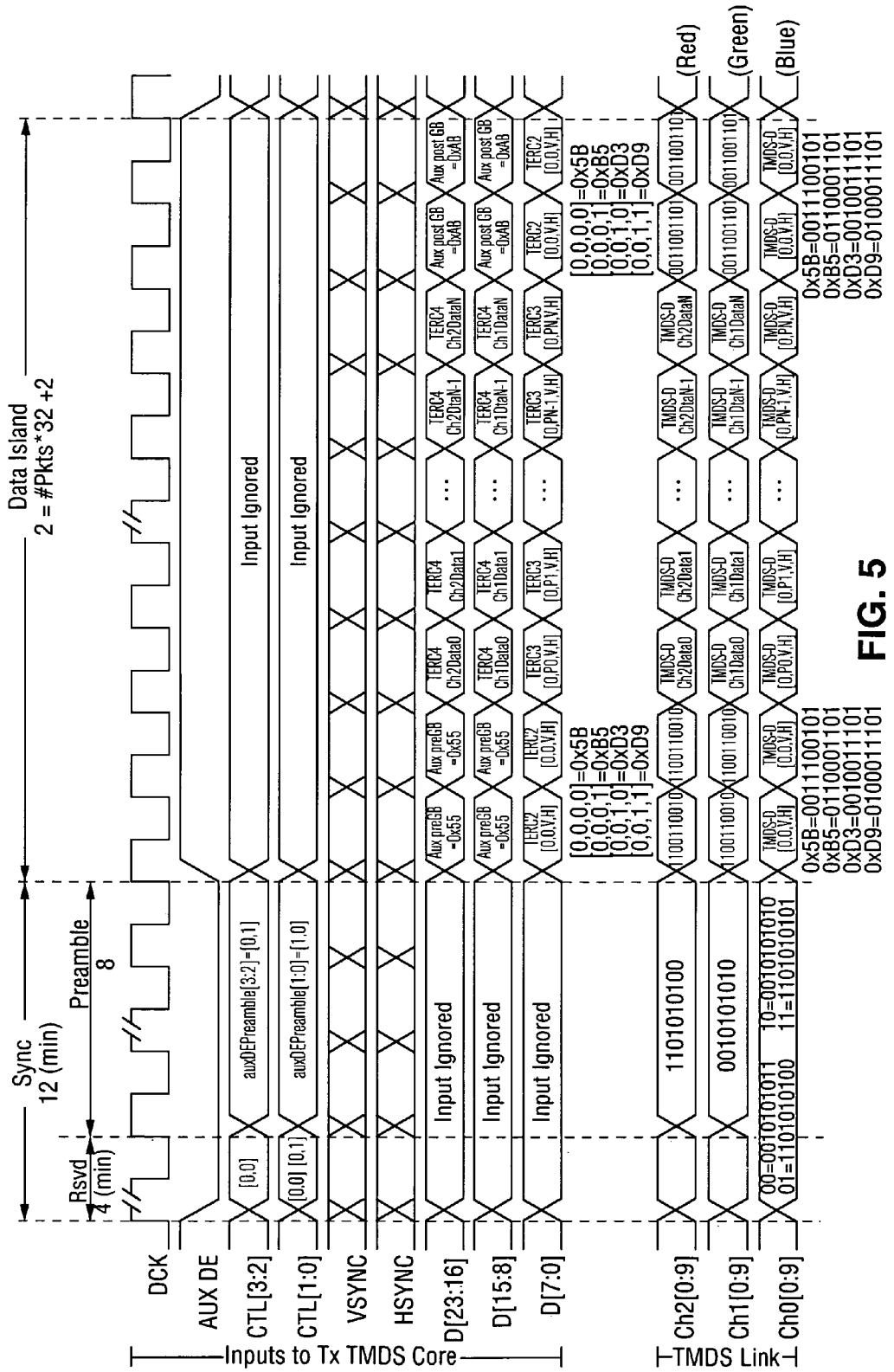
Data Island
2 = #Pkts*32 +2
Sync
12 (min)
Preamble
8
Rsvd
4 (min)
DCK
AUX DE
CTL[3:2]
CTL[1:0]
VSYNC
HSYNC
D[23:16]
D[15:8]
D[7:0]
Inputs to Tx TMDS Core
Input Ignored
Input Ignored
Input Ignored
Input Ignored
Input Ignored
Ch2[0:9]
Ch1[0:9]
Ch0[0:9]
TMDS Link
1101010100
0010101010
(Red)
(Green)
(Blue)

FIG. 5

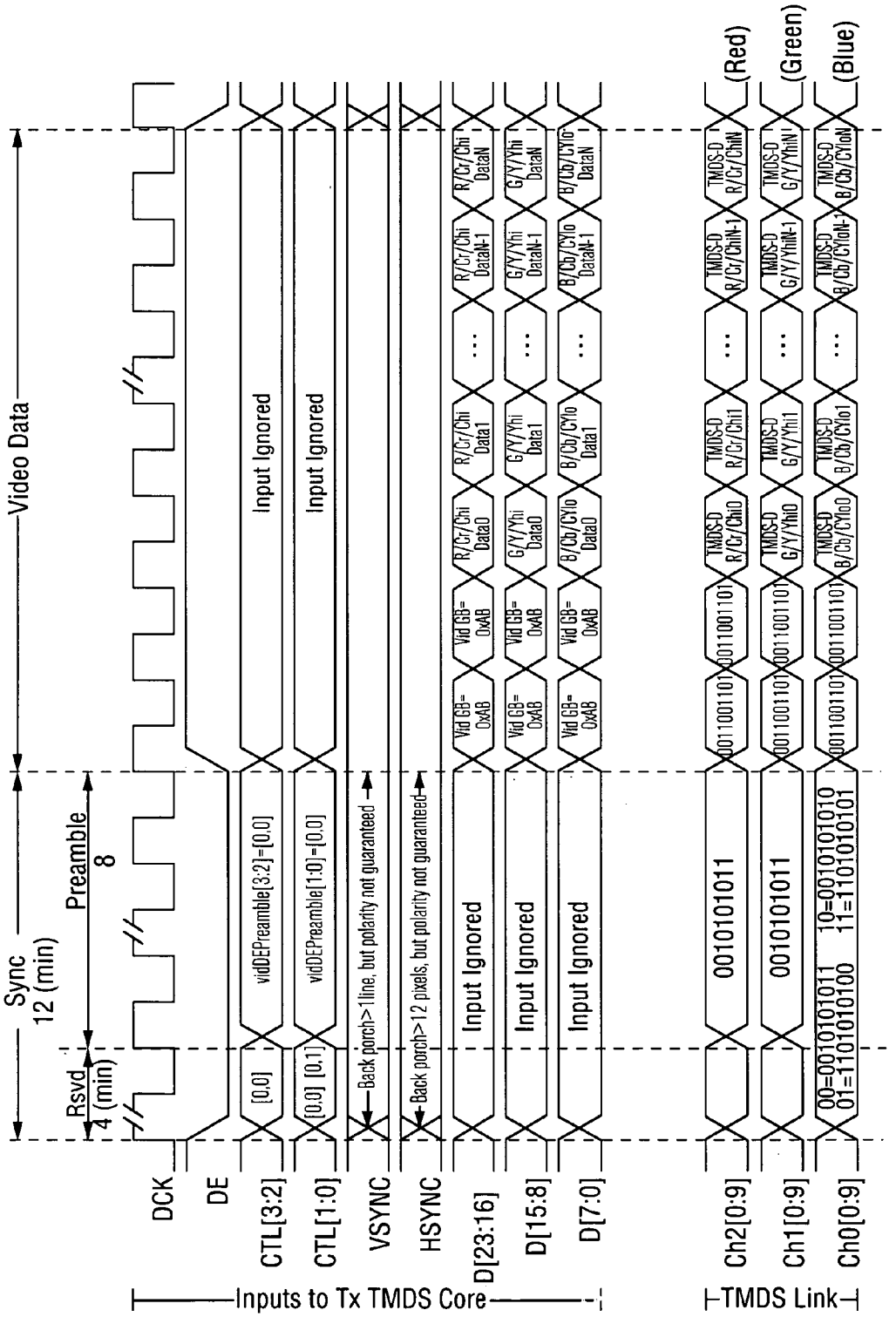
Video Data
Sync
12 (min)
Preamble
8
Rsvd
4 (min)
DCK
DE
CTL[3:2]
CTL[1:0]
VSYNC
HSYNC
D[23:16]
D[15:8]
D[7:0]
Ch2[0:9]
Ch1[0:9]
Ch0[0:9]
Inputs to Tx TMDS Core
TMDS Link
[0,0]
[0,0] [0,1]
vidDEPreamble[3:2]=[0,0]
vidDEPreamble[1:0]=[0,0]
Back porch>1line, but polarity not guaranteed
Back porch>12 pixels, but polarity not guaranteed
Input Ignored
Vid GB= 0xAB
R/Cr/Chi DataN
R/Cr/Chi DataN-1
R/Cr/Chi Data1
R/Cr/Chi Data0
G/Y/Yhi DataN
G/Y/Yhi DataN-1
G/Y/Yhi Data1
G/Y/Yhi Data0
B/Cb/CYlo DataN
B/Cb/CYlo DataN-1
B/Cb/CYlo Data1
B/Cb/CYlo Data0
0010101011
0011001101
TMDS-D R/Cr/ChiN
TMDS-D R/Cr/ChiN-1
TMDS-D R/Cr/Chi1
TMDS-D R/Cr/Chi0
TMDS-D G/Y/YhiN
TMDS-D G/Y/YhiN-1
TMDS-D G/Y/Yhi1
TMDS-D G/Y/Yhi0
TMDS-D B/Cb/CYloN
TMDS-D B/Cb/CYloN-1
TMDS-D B/Cb/CYlo1
TMDS-D B/Cb/CYlo0
00=0010101011 10=0010101010
01=1101010100 11=1101010101
(Red)
(Green)
(Blue)

FIG. 6

ENCODING METHOD AND SYSTEM FOR REDUCING INTER-SYMBOL INTERFERENCE EFFECTS IN TRANSMISSION OVER A SERIAL LINK

CROSS REFERENCE TO RELATED APPLICATION

This application is a continuation-in-part of pending U.S. patent application Ser. No. 09/954,663, filed on Sep. 12, 2001, and assigned to the assignee of the present application.

TECHNICAL FIELD OF THE INVENTION

The invention pertains to transmission of encoded data (e.g., one or both of video data and auxiliary data such as audio data) over a serial link, in such a manner as to reduce the bit error rate resulting from inter-symbol interference or other error-causing effects during transmission. In some embodiments, the serial link is a transition minimized differential signaling ("TMDS") link, or a link having some but not all of the characteristics of a TMDS link.

BACKGROUND OF THE INVENTION

Elements of this invention are based upon properties of a serial link. Various serial links for transmitting data and clock signals are well known.

One conventional serial link, used primarily for high-speed transmission of video data from a host processor (e.g., a personal computer) to a monitor, is known as a transition minimized differential signaling interface ("TMDS" link). The characteristics of a TMDS link include the following:

1. video data are encoded and then transmitted as encoded words (each 8-bit word of digital video data is converted to an encoded 10-bit word before transmission);
   a. the encoding determines a set of "in-band" words and a set of "out-of-band" words (the encoder can generate only "in-band" words in response to video data, although it can generate "out-of-band" words in response to control or sync signals. Each in-band word is an encoded word resulting from encoding of one input video data word. All words transmitted over the link that are not in-band words are "out-of-band" words);
   b. the encoding of video data is performed such that the in-band words are transition minimized (a sequence of in-band words has a reduced or minimized number of transitions);
   c. the encoding of video data is performed such that the in-band words are DC balanced (the encoding prevents each transmitted voltage waveform that is employed to transmit a sequence of in-band words from deviating by more than a predetermined threshold value from a reference potential. Specifically, the tenth bit of each "in-band" word indicates whether eight of the other nine bits thereof have been inverted during the encoding process to correct for an imbalance between running counts of ones and zeroes in the stream of previously encoded data bits);
2. the encoded video data and a video clock signal are transmitted as differential signals (the video clock and encoded video data are transmitted as differential signals over conductor pairs);
3. three conductor pairs are employed to transmit the encoded video, and a fourth conductor pair is employed to transmit the video clock signal; and

4. signal transmission occurs in one direction, from a transmitter (typically associated with a desktop or portable computer, or other host) to a receiver (typically an element of a monitor or other display device).

A use of the TMDS serial link is the "Digital Visual Interface" interface ("DVI" link) adopted by the Digital Display Working Group. It will be described with reference to FIG. **1**. A DVI link can be implemented to include two TMDS links (which share a common conductor pair for transmitting a video clock signal) or one TMDS link, as well as additional control lines between the transmitter and receiver. The DVI link of FIG. **1** includes transmitter **1**, receiver **3**, and the following conductors between the transmitter and receiver: four conductor pairs (Channel **0**, Channel **1**, and Channel **2** for video data, and Channel C for a video clock signal), Display Data Channel ("DDC") lines for bidirectional communication between the transmitter and a monitor associated with the receiver in accordance with the conventional Display Data Channel standard (the Video Electronics Standard Association's "Display Data Channel Standard," Version 2, Rev. 0, dated Apr. 9, 1996), a Hot Plug Detect (HPD) line (on which the monitor transmits a signal that enables a processor associated with the transmitter to identify the monitor's presence), Analog lines (for transmitting analog video to the receiver), and Power lines (for providing DC power to the receiver and a monitor associated with the receiver). The Display Data Channel standard specifies a protocol for bidirectional communication between a transmitter and a monitor associated with a receiver, including transmission by the monitor of an Extended Display Identification ("EDID") message that specifies various characteristics of the monitor, and transmission by the transmitter of control signals for the monitor. Transmitter **1** includes three identical encoder/serializer units (units **2**, **4**, and **6**) and additional circuitry (not shown). Receiver **3** includes three identical recovery/decoder units (units **8**, **10**, and **12**) and inter-channel alignment circuitry **14** connected as shown, and additional circuitry (not shown).

As shown in FIG. **1**, circuit **2** encodes the data to be transmitted over Channel **0**, and serializes the encoded bits. Similarly, circuit **4** encodes the data to be transmitted over Channel **1** (and serializes the encoded bits), and circuit **6** encodes the data to be transmitted over Channel **2** (and serializes the encoded bits). Each of circuits **2**, **4**, and **6** responds to a control signal (an active high binary control signal referred to as a "data enable" or "DE" signal) by selectively encoding either digital video words (in response to DE having a high value) or a control or synchronization signal pair (in response to DE having a low value). Each of encoders **2**, **4**, and **6** receives a different pair of control or synchronization signals: encoder **2** receives horizontal and vertical synchronization signals (HSYNC and VSYNC); encoder **4** receives control bits CTL**0** and CTL**1**; and encoder **6** receives control bits CTL**2** and CTL**3**. Thus, each of encoders **2**, **4**, and **6** generates in-band words indicative of video data (in response to DE having a high value), encoder **2** generates out-of-band words indicative of the values of HSYNC and VSYNC (in response to DE having a low value), encoder **4** generates out-of-band words indicative of the values of CTL**0** and CTL**1** (in response to DE having a low value), and encoder **6** generates out-of-band words indicative of the values of CTL**2** and CTL**3** (in response to DE having a low value). In response to DE having a low value, each of encoders **4** and **6** generates one of four specific out-of-band words indicative of the values 00, 01, 10, or 11, respectively, of control bits CTL**0** and CTL**1** (or CTL**2** and CTL**3**).

It has been proposed to encrypt video data transmitted over a serial link. For example, it has been proposed to use a cryptographic protocol known as "High-bandwidth Digital Content Protection" ("HDCP") to encrypt digital video to be transmitted over a DVI link and to decrypt the data at the DVI receiver. A DVI transmitter implementing HDCP outputs a 24-bit bus, known as cout[23:0], during the video active period (i.e. when DE is high). This 24-bit cout data is "Exclusive Ored" (in logic circuitry in the transmitter) with the 24-bit RGB video data input to the transmitter in order to encrypt the video data. The encrypted data is then encoded (according to the TMDS standard) for transmission. The same cout data is also generated in the receiver. After the encoded and encrypted data received at the receiver undergoes TMDS decoding, the cout data is processed together with the decoded video in logic circuitry in order to decrypt the decoded data and recover the original input video data.

Before the transmitter begins to transmit HDCP encrypted, encoded video data, the transmitter and receiver communicate bidirectionally with each other to execute an authentication protocol (to verify that the receiver is authorized to receive protected content, and to establish shared secret values for use in encryption of input data and decryption of transmitted encrypted data). After the receiver has been authenticated, the transmitter calculates the initial set of encryption keys (for encrypting the first line of input video data) in response to a control signal and sends the control signal to the receiver (during each vertical blanking period, when DE is low) to cause the receiver to calculate an initial set of decryption keys (for decrypting the first received and decoded line of transmitted video data). Following generation of the initial set of encryption/decryption keys, each of the transmitter and receiver performs a re-keying operation during each blanking (vertical or horizontal) interval to generate a new set of keys for encrypting (or decrypting) the next line of video data, and actual encryption of input video data (or decryption of received, decoded video data) is performed using the latest set of keys only when DE is high (not during the blanking intervals).

Each of the transmitter and receiver includes an HDCP cipher circuit (sometimes referred to herein as an "HDCP cipher") including a linear feedback shift register (LFSR) module, a block module coupled to the output of the LFSR module, and an output module coupled to an output of the block module. The LFSR module is employed to re-key the block module in response to each assertion of an enable signal, using a session key (Ks) and frame key (Ki). The block module generates (and provides to the LFSR module) the key Ks at the start of a session and generates (and applies to the LFMS module) a new value of key Ki at the start of each frame of video data (in response to a rising edge of a control signal which occurs in the first vertical blanking interval of a frame).

The block module comprises two halves, known as "Round Function K" and "Round Function B." Round Function K includes 28-bit registers Kx, Ky, and Kz, seven S-Boxes (each a 4 input bit by 4 output bit S-Box including a look-up table), and a linear transformation unit K. Round Function B includes 28-bit registers Bx, By, and Bz, seven S-Boxes (each a 4 input bit by 4 output bit S-Box including a look-up table), and a linear transformation unit B. Round Function K and Round Function B are similar in design, but Round Function K performs one round of a block cipher per clock cycle to assert (to the output module) a different pair of 28-bit round keys (Ky and Kz) each clock cycle in response to the output of the LFSR module, and Round Function B performs one round of a block cipher per clock cycle, in response to each 28-bit round key Ky from Round Function K and the output of the LFSR module, to assert (to the output module) a different pair of 28-bit round keys (By and Bz) each clock cycle. The transmitter generates value An at the start of the authentication protocol and the receiver responds to it during the authentication procedure. The value An is used to randomize the session key. The block module operates in response to the authentication value (An) and an initialization value (Mi, also referred to as an integrity verification key) which is updated by the output module at the start of each frame.

Each of linear transformation units K and B outputs 56 bits per clock cycle. These output bits are the combined outputs of eight diffusion networks in each transformation unit. Each diffusion network of linear transformation unit K produces seven output bits in response to seven of the current output bits of registers Ky and Kz. Each of four of the diffusion networks of linear transformation unit B produces seven output bits in response to seven of the current output bits of registers By, Bz, and Ky, and each of the four other diffusion networks of linear transformation unit B produces seven output bits in response to seven of the current output bits of registers By and Bz.

The output module performs a compression operation on the 28-bit keys (By, Bz, Ky and Kz) asserted to it (a total of 112 bits) by the block module during each clock cycle, to generate one 24-bit block of pseudo-random bits cout[23:0] per clock cycle. Each of the 24 output bits of the output module consists of the exclusive OR ("XOR") of nine terms.

In the transmitter, logic circuitry receives each 24-bit block of cout data and each input 24-bit RGB video data word, and performs a bitwise XOR operation thereon in order to encrypt the video data, thereby generating a word of encrypted RGB video data. Typically, the encrypted data subsequently undergoes TMDS encoding before it is transmitted to a receiver. In the receiver, logic circuitry receives each 24-bit block of cout data and each recovered 24-bit RGB video data word (after the recovered data has undergone TMDS decoding), and performs a bitwise XOR operation thereon in order to decrypt the recovered video data.

Throughout the specification the expression "TMDS-like link" will sometimes be used to denote a serial link capable of transmitting encoded data (e.g., encoded digital video data) and a clock for the encoded data, from a transmitter to a receiver, and optionally also capable of transmitting (bidirectionally or unidirectionally) one or more additional signals (e.g., encoded digital audio data or other encoded data) between the transmitter and receiver, that is or includes either a TMDS link or a link having some but not all of the characteristics of a TMDS link. There are several conventional TMDS-like links.

Some TMDS-like links encode input video data (and other data) to be transmitted into encoded words comprising more bits than the incoming data using a coding algorithm other than the specific algorithm used in a TMDS link, and transmit the encoded video data as in-band characters and the other encoded data as out-of-band characters. The characters need not be classified as in-band or out-of-band characters based according to whether they satisfy transition minimization and DC balance criteria. Rather, other classification criteria could be used. An example of an encoding algorithm, other than that used in a TMDS link but which could be used in a TMDS-like link, is IBM 8b10b coding. The classification (between in-band and out-of-band characters) need not be based on just a high or low number of transitions. For example, the number of transitions of each of the in-band and out-of-band characters could (in some

embodiments) be in a single range (e.g., a middle range defined by a minimum and a maximum number of transitions).

The data transmitted between the transmitter and receiver of a TMDS-like link can, but need not, be transmitted differentially (over a pair of conductors). Also, although a TMDS link has four differential pairs (in the single pixel version), three for video data and the other for a video clock, a TMDS-like link could have a different number of conductors or conductor pairs.

Typically, the primary data transmitted by a TMDS link are video data. What is often significant about this is that the video data are not continuous, and instead have blanking intervals. These blanking intervals provide an opportunity (exploited in some embodiments of the present invention) for auxiliary data to be transported, and they represent unused bandwidth. However, many serial links do not transmit data having blanking intervals, and thus do not encode input data (for transmission) in response to a data enable signal. For example, audio serial links would typically transmit continuous data.

The expression "auxiliary data" is used in a broad sense herein to denote digital audio data or any other type of data other than video data and timing information for video data (e.g., a video clock). For example, timing information for audio data (e.g., a clock for recovering transmitted audio data) falls within the scope of "auxiliary data." Other examples of "auxiliary data" transmitted in accordance with the invention include computer keyboard signals, still image data (generated by a camera, for example), text data, control signals for a power supply, picture in picture data, monitor control information (audio volume, brightness, power state), control signals for indicator lights on a monitor or keyboard, non-audio or video control information, etc.

The term "stream" of data, as used herein, denotes that all the data are of the same type and is transmitted with the same clock frequency. The term "channel," as used herein, refers to that portion of a serial link that is employed to transmit data (e.g., a particular conductor or conductor pair between the transmitter and receiver over which the data are transmitted, and specific circuitry within the transmitter and/or receiver used for transmitting and/or recovery of the data) and to the technique employed to transmit the data over the link. Because it is desirable to transmit many different streams of auxiliary data in important applications of the invention, preferred embodiments of the invention provide multiple channels for transmission of auxiliary data, including channels for transmission of auxiliary data in both directions over the link (that is, with and against the direction of the video data). In some implementations, a channel is employed to transmit one stream of auxiliary data. In other implementations, a channel is employed to transmit more than one stream of auxiliary data. In some embodiments of the invention, two (or more than two) streams of serial video data are transmitted (over one, two, or more than two channels), and either one, two, or more than two streams of serial auxiliary data are also transmitted.

U.S. Pat. No. 5,999,571, issued Dec. 7, 1999, teaches (e.g., at col. 5) that, when the code words (indicative of video data) transmitted over a TMDS link are transition minimized words (a first subset of a set of code words), synchronization words (distinguishable from the transition minimized code words) can be transmitted over the link during "preamble" periods in which encoded video data are not transmitted. The synchronization words can be transition maximized words that are members of a second subset (disjoint from the first subset) of the set of code words. U.S. Pat. No. 5,999,571 teaches that several (e.g., three) repetitions of a synchronization word should be transmitted consecutively, to allow the decoder (in the receiver) rapidly and accurately to identify a specific transition (e.g., the leading edge) of one of the synchronization words and thus to accomplish synchronization with the encoder (in the transmitter.

U.S. Pat. No. 6,151,334, issued Nov. 21, 2000, teaches transmission (over a TMDS link) of several different types of encoded control words, each distinguishable from transition minimized code words indicative of data. At least some of the control words can be transition maximized words. One of the control words is a "data stream separation" word that is transmitted before or after a burst of data and is indicative of the start or end of a burst and the type of data transmitted during the burst. Another one of the control words is an "isochronous data transfer" word that is a synchronization character typically transmitted at the beginning or end of a blanking interval and indicates the type of the blanking interval (e.g., horizontal or vertical) and distinguishes between the beginning and the end of the blanking interval. For example, a first isochronous data transfer word indicates the start of a vertical blanking interval, a first data stream separation word then indicates the start of data in the vertical blanking interval, a second data stream separation word then indicates the end of such data burst, and a second isochronous data transfer word then indicates the end of the vertical blanking interval. Each of the first isochronous data transfer word, the first data stream separation word, the second data stream separation word, and the second isochronous data transfer word is a transition maximized code word, a transition minimized code word can indicate each word of data of the data burst (transmitted in the vertical blanking interval), and the vertical blanking interval can be followed by an active video period comprising a third data stream separation word (indicative of the start of a stream of video data) followed by a stream of transition minimized code words indicative of the video data itself.

SUMMARY OF THE INVENTION

In a class of embodiments, the invention is a communication system including a transmitter, a receiver, and a serial link (which can but need not be a TMDS or TMDS-like link), in which encoded data (e.g., encoded video data and optionally also encoded auxiliary data) are transmitted from the transmitter to the receiver. The serial link can but need not be a TMDS or TMDS-like link. In typical embodiments, alternating bursts of encoded video data and encoded auxiliary data are transmitted over each of one or more channels of the link. Other aspects of the invention are transmitters for use in encoding data for transmission over a serial link, and methods for sending encoded data over a serial link.

In accordance with the invention, the data to be transmitted are encoded using a subset (a "robust" subset) of a full set of code words. Typically, the code words in the full set have equal length (e.g., each consists of N bits). The robust subset will sometimes be referred to herein as a "selected" (or "inventive") set of code words, and the code words in the robust subset will sometimes referred to as the "inventive" code words. The robust subset is selected such that each stream of encoded data (comprising only inventive code words) transmitted over a serial link has a bit pattern that is less susceptible to inter-symbol interference ("ISI") during transmission than is the bit pattern determined by a transmitted, conventionally encoded version of the same data

(comprising not only inventive code words but also members of the full set that are not inventive code words). Since the inventive code words are a subset of the full code word set and each inventive code word determines one source data word, the bit rate at which source data can be transmitted over the link is lower if the transmitted data are encoded using only the inventive code words than if the transmitted data are encoded conventionally using the full code word set. This is because, in general, a set of source data bits can be grouped into a fewer number of longer source data words (each different source data word to be encoded as a different L-bit code word) when more different L-bit code words are available for encoding the source data.

In general, the best choice for the particular inventive code word set selected from a full set of binary code words depends on the particular coding implemented by the full set (i.e., the details of which bits of each code word in the full set are zeroes and which are ones). In preferred embodiments, the inventive code words are selected to be those whose serial patterns (during transmission) have fewer contiguous zeros and ones (e.g., on the average), and thus are less susceptible to ISI during transmission, than do those code words in the full set that are not selected (e.g., the average number of contiguous zeros and ones, per code word, of the inventive code words is less than the average number of contiguous zeros and ones, per code word, of the code words in the full set that are not selected as the inventive code words). Also, when the bits of the inventive code words are transmitted over a serial link as sequences of rising and falling voltage transitions, the bit pattern of each transmitted stream of the inventive code words preferably implements DC balancing (the voltage drift over time is limited).

Typically, the full set comprises 2^N binary code words (each having a length of L bits) and thus can be efficiently used to encode data words of N-bit length for transmission. Also typically, the robust subset comprises 2^M of these code words (each having a length of L bits), where M<N, and thus can be efficiently used to encode data words of M-bit length for transmission. In this case, in order to encode N-bit source words using the inventive code words, the N-bit source words can be buffered and packed into M-bit format. Each resulting M-bit source word can then be encoded (as an L-bit encoded word) using one of the inventive code words. Assuming that the same time is required to transmit and decode each L-bit encoded word (regardless of whether the word is a member of the robust subset), fewer source data bits can be transmitted per unit time when the source words are encoded using the inventive code words than when the source words are conventionally encoded using the full code word set. For example, to encode 8-bit source data words, the full code word set can be the set of 10-bit code words employed in a conventional TMDS link (each such code word comprising one of 256, transition-minimized, 9-bit patterns whose most significant bit indicates that the pattern is transition-minimized, concatenated with a tenth bit indicating whether the eight least-significant bits have or have not been inverted in accordance with a DC balancing algorithm). In some embodiments, the robust subset consists of sixteen selected 10-bit code words of this full set, and the nine least-significant bits of each code word in the robust subset are indicative of a different one of the 256, transition-minimized, 9-bit patterns. Thus, to encode the 8-bit source words using only the sixteen inventive code words, each 8-bit source word is split into two 4-bit portions and each 4-bit portion separately encoded as one of the inventive 10-bit code words. Thus, the rate at which the 8-bit source data can be transmitted (after being encoded using only the inventive code words) is only half the rate at which the same data can be transmitted after being encoded conventionally using the full code word set. However, the conventionally encoded data would be subject to higher rates of error (e.g., error due to ISI) during transmission than would the same data if transmitted after being encoded using only the inventive code words.

In general, by reducing the ratio of M to N in the example (in which the robust subset comprises 2^M code words), lower bit-error rates (BER) can be achieved in accordance with the invention at the cost of reducing the rate at which the source data can be transmitted. Conversely, increasing the ratio of M to N results in an increased source data transmission rate at the cost of a higher BER.

Encoding of data in accordance with the invention is particularly beneficial in applications in which encoded data are to be transmitted over very long conductors or under other conditions in which there would otherwise be a high risk of error due to ISI during transmission.

In some embodiments of the invention, encoded data are transmitted in bursts over the serial link, and at least one of the inventive code words is used as a "guard band" word that is transmitted at the start or end (or the start and end) of a burst of encoded data (to identify the leading and/or trailing edge of the burst) or at the start or end (or at the start and end) of each burst of encoded data of a specific type. In some such embodiments, two different guard band words are used: one for transmission at the start of each encoded data burst (to identify the leading edge of the burst); the other for transmission at the end of each encoded data burst (to identify the trailing edge of the burst). In preferred embodiments, bursts of at least two different types of encoded data (e.g., audio data or other auxiliary data, and video data) are transmitted over the serial link and P different ones (where P is greater than or equal to 2) of the inventive code words are used as P different guard band words, including: one guard band word for transmission at the start of each burst of encoded data of a first type (to identify the leading edge of such burst); and another guard band word for transmission at the start of each burst of encoded data of a second type (to identify the leading edge of such burst). For example, in some embodiments bursts of encoded video data (each identified by a first guard band word) are transmitted during active video periods, and bursts of auxiliary data (each identified by a second guard band word) are transmitted during blanking intervals between the active video periods.

In a class of systems that embody the invention, 8-bit video data words (each encoded according to the TMDS encoding algorithm as a 10-bit code word) are transmitted over a TMDS link (or other TMDS-like link having multiple channels for transmitting serial video) during active video periods in which a control signal (DE) is high, and control words (each indicative of two bits: CTL**0** and CTL**1**, or CTL**2** and CTL**3**) or synchronization words (each indicative of two bits: HSYNC and VSYNC) are transmitted over each of at least some of the video transmission channels during blanking intervals (in which DE is low) between the active video periods. The system is operable in a mode in which each transmitted video data word is conventionally encoded as a transition-minimized, 10-bit TMDS code word. Each such transition-minimized code word determines one of 256 different nine-bit patterns, having a most significant bit indicating that the pattern is transition-minimized, concatenated with a tenth bit indicating whether the eight least-significant bits of the nine-bit pattern have or have not been

inverted in accordance with a DC balancing algorithm. Each transmitted control word (CTL**1**:CTL**0** or CTL**3**:CTL**2**) and synchronization word (HSYNC:VSYNC) is a distinctive, 10-bit, transition-maximized word. In preferred embodiments, 4-bit words of auxiliary data (encoded in accordance with the invention) are transmitted during the blanking intervals at times when no control words or synchronization words are transmitted. The auxiliary data are typically but not necessarily audio data. In other embodiments, the system is operable in a mode in which 4-bit words of video data (encoded in accordance with the invention) are transmitted during the active video periods. To provide at least one guard band word, and for use in encoding auxiliary data in accordance with the invention for transmission in blanking intervals between active video periods, a robust subset of 17 different, transition-minimized code words is selected from the full conventional TMDS code space: sixteen 10-bit code words (each indicative of a different 4-bit auxiliary data word, and one of which is optionally also used as a guard band word at the start and end of each burst of encoded auxiliary data); and one 10-bit code word used as a guard band word (at the start and end of each active video period). Alternatively, a robust subset of 18 different, transition-minimized code words is selected from the full conventional TMDS code space: sixteen 10-bit code words (each indicative of a different 4-bit source word); and two 10-bit code words (each used as a guard band word).

In some embodiments of the invention, bursts of encoded auxiliary data and bursts of encoded video data are transmitted over a serial link, and the auxiliary data are encoded in accordance with the invention using a set of inventive code words. The set of inventive code words includes a "video" guard band word that is transmitted at the start of each encoded video data burst, and an "auxiliary" guard band word that is transmitted at the start of each encoded auxiliary data burst. In some implementations, at least one of the guard band words is also used for a second purpose: to encode auxiliary data. In preferred implementations of such embodiments, the encoded video data are transmitted during active video periods in which a control signal, DE, is high (DE=1), and encoded control (or synchronization) signals and encoded auxiliary data are transmitted during blanking intervals (in which DE=0) between active video periods. At least one video guard band word is transmitted at the start of each active video period. Each blanking interval comprises at least one auxiliary data period (each comprising at least one auxiliary guard band word followed by a burst of encoded auxiliary data), a preamble period (or "front porch") between the falling edge of DE (at the start of the blanking interval) and the start of the first (or only) auxiliary data period (and optionally also an additional front porch before each subsequent auxiliary data period in the blanking interval), and a final period (a "back porch") between the last auxiliary data period and the next active video period. Control (or sync) signals of a specific type are transmitted during each front porch. Control signals of another specific type are transmitted in the back porch.

BRIEF DESCRIPTION OF THE DRAWINGS

FIG. **1** is a block diagram of a conventional system including a Digital Visual Interface ("DVI") link.

FIG. **2** is a block diagram of a first embodiment of the inventive system.

FIG. **3** is a table showing data patterns transmitted in "front porch" and "back porch" portions of a blanking interval, and the inventive guard band code words transmitted after such front porch and back porch portions, in a preferred embodiment of the invention.

FIG. **4** is a table showing a set of seventeen of the inventive code words (including one guard band word) employed in a preferred embodiment of the invention.

FIG. **5** is a timing diagram of signals input to the transmitter during a video blanking interval of an embodiment of the inventive system, and encoded signals transmitted over a TMDS link of such system in response thereto.

FIG. **6** is a timing diagram of signals input to the transmitter during the back porch portion of a video blanking interval (and during a subsequent active video period) of an embodiment of the inventive system, and encoded signals transmitted over a TMDS link of such system in response thereto.

DETAILED DESCRIPTION OF THE PREFERRED EMBODIMENTS

During transmission of data over a serial link from a transmitter to a receiver, inter-symbol interference ("ISI") can give rise to errors that cause the received data to differ from the transmitted data. The rate at which such errors occur depends on such factors as the channel medium, and when the data are patterns of binary bits, the particular bit patterns that are transmitted. In accordance with the invention, data are encoded for transmission over a serial link with bit patterns that are less susceptible to ISI during transmission over the link than are the patterns determined by conventionally encoded versions of the same data. Thus, the data are transmitted more reliably in accordance with the invention, and with reduced error rate, than are conventionally encoded versions of the same data. More specifically, data are encoded in accordance with the invention using a subset (a "robust" subset) of a full set of code words. Typically, the code words in the full set have equal length (e.g., each consists of N bits). The robust subset will sometimes be referred to herein as a "selected" or "inventive" set of code words, and the code words in the robust subset will sometimes referred to as the "inventive" code words. The robust subset is selected such that each transmitted stream of encoded data (coded using only members of the inventive code word set) has patterns that are less susceptible to ISI during transmission over the serial link than are patterns determined by a transmitted, conventionally encoded version of the same data (that has been coded using code words of the full set other than members of the inventive code word set, as well as members of the inventive code word set). Since there are more code words in the full set than there are inventive code words, fewer words of data can be transmitted over the link per unit time if the transmitted data are encoded using only the inventive code words than if the transmitted data are encoded conventionally using the full set of code words.

Encoding of data in accordance with the invention is particularly beneficial in applications in which the encoded data are transmitted over very long conductors or under other conditions in which there would otherwise be a high risk of error due to ISI during transmission.

It should be appreciated that the term "transmitter" is used herein in a broad sense to denote any unit capable of encoding data and transmitting the encoded data over a serial link (and optionally also encrypting the data to be transmitted), and the term "receiver" is used herein in a broad sense to denote any unit capable of receiving data and decoding that has been transmitted over a serial link (and optionally also decrypting the received data). For example,

the term transmitter can denote a transceiver that performs the functions of a receiver as well as the functions of a transmitter. In a more specific example, the term transmitter (with reference to a unit that transmits non-audio auxiliary data over a TMDS-like link or other serial link) can denote a transceiver that is configured to receive video data and audio data over the link and to transmit the non-audio auxiliary data over the link.

As noted above, the term "stream" of data (as used herein) denotes that all the data are of the same type and are transmitted with the same clock frequency, and the term "channel" (as used herein) refers to that portion of a serial link that is employed to transmit data (e.g., a particular conductor or conductor pair between the transmitter and receiver over which the data are transmitted, and specific circuitry within the transmitter and/or receiver used for transmitting and/or recovery of the data) and to the technique employed to transmit the data over the link.

When transmitting audio (or other auxiliary) data via a serial link, is it often desired to transmit multiple streams of the auxiliary data, and it is often valuable for multiple channels of the link to be available for transmission of the auxiliary data. For example, there can be two audio streams (left and right streams of stereo audio), six streams (e.g., those of "5.1" surround sound), or up to eight streams (e.g., those of "7.1" surround sound). Alternatively, it may be desired to transmit even more streams of audio data with video, or to transmit streams of non-audio auxiliary data (for providing non-audio effects that are synchronized to the video) with audio and video. All such streams of auxiliary data are typically on the same time base, but alternatively there can be a need for some of the audio (or other auxiliary) data to be based upon another time base, or to have a different sampling rate. For example transmission of six streams of pulse code modulated (PCM) audio data over the link can be based upon one clock. Another two streams of compressed audio data, possibly a down-mix (for playback on a reduced number of speakers), might be transmitted with the video and PCM data as well.

In high-speed serial digital data transmission the data are often encoded to maximize or minimize the number of transitions and to also balance the DC level. For example, in systems including at least one of the above-referenced TMDS links, transition-minimized, DC-balanced, TMDS encoded video data are transmitted over each of three channels of at least one TMDS link, and encoded auxiliary data (e.g., audio data) can be transmitted over one or more of these three channels during blanking intervals between the active video periods. When the bandwidth requirement of the auxiliary data is lower than that of the primary data (video data) and the auxiliary data channel has significant ISI (which can result from a long cable), then the auxiliary data are desirably encoded using the inventive encoding scheme to achieve a lower bit-error rate during transmission.

In a class of preferred embodiments, auxiliary data are encoded in accordance with the invention (for transmission over a TMDS link) using a subset of the transition-minimized TMDS code words that are conventionally used to encode video data for transmission over the link. These and/or other embodiments of the invention can be implemented by a system of a type to be described with reference to FIG. **2**. The FIG. **2** system is identical to that of FIG. **1**, except in that it is configured to encode auxiliary data (or other auxiliary data) in accordance with the invention (and also to encode video data in the same conventional manner as in the FIG. **1** system), transmit the encoded data over one or more of Channel **0**, Channel **1**, and Channel **2** (and also to transmit encoded video data over each such channel), and decode the encoded auxiliary data (as well as the encoded video data). Transmitter **1'** and receiver **2'** of FIG. **2** correspond, respectively, to transmitter **1** and receiver **3** of FIG. **1** (but perform auxiliary data encoding, transmission, and decoding functions that are not performed by transmitter **1** and receiver **3** of FIG. **1**). The TMDS link between transmitters **1'** and **2'** in FIG. **2** is identical to the TMDS link between transmitters **1** and **3** in FIG. **1**, although some of the conductors thereof are shown in FIG. **1** but not in FIG. **2** (for simplicity).

The FIG. **2** system preferably transmits a video clock over a conductor pair (labeled "Channel C in FIG. **2**) of the TMDS link, and also transmits a clock for the auxiliary data over at least one channel of the link. For example, transmitter **1'** transmits video data to receiver **2'** over Channels **0**, **1**, and **2** (which are identical to the identically numbered channels of the FIG. **1** system) except during video blanking intervals, transmits two streams of audio data (e.g., left and right stereo signals) over any two of Channels **0**, **1**, and **2** to receiver **2'** during the video blanking intervals, continuously transmits a video clock (e.g., determined by the rising edges of a binary waveform) over Channel C, and transmits time stamp data with each burst of the audio data. The time stamp data determine a clock for the audio data, as described in above-cited U.S. patent application Ser. No. 09/954,663, filed on Sep. 12, 2001. Receiver **2'** is configured to process the time stamp data to recover the audio clock employed to transmit the audio data.

Typically the clock for a stream of audio data has a much lower frequency than the pixel clock for a stream of video. However, in most applications the audio clock needs to be more accurate than the pixel clock, to reduce jitter. This is true since distortion in analog audio (that has been generated from digital audio data having jitter) is more easily discernible (to one experiencing the analog audio) than is the distortion in a displayed video program generated from digital video having the same amount of jitter.

In the FIG. **2** system, 8-bit source words of video data are encoded into 10-bit code words which are then serialized and transmitted over a channel medium (one of the conductor pairs identified as Channels **0**, **1**, and **2**). In receiver **2'**, each 10-bit code word is decoded back to the original 8-bit word if no errors are present. Each code word comprises a 9-bit base pattern (a transition-minimized member of a set of 2^9 nine-bit patterns, whose most significant bit indicates that the base pattern is transition-minimized, concatenated with a tenth bit indicating whether the eight least-significant bits of the base pattern have or have not been inverted in accordance with a DC balancing algorithm). In transmitter **1'**, each 8-bit source word is first encoded to one of the 9-bit base patterns, and a stream of the 9-bit base patterns are then encoded as a stream of the 10-bit code words (in a manner that achieves improved DC balancing of the transmitted stream of 10-bit code words). However, the decoded video data can include errors (especially when the relevant channel has significant ISI), depending on the specific channel media and the specific data patterns of the transmitted serial bit stream.

If transmitter **1'** and receiver **2'** were operated to encode and decode the auxiliary data in the same way that they encode and decode the video data, and to send both types of encoded data over the same channel of the serial link, the decoded auxiliary data would be subject to error at the same error rate. This error rate can be unacceptably high for auxiliary data (especially when the auxiliary data are audio data), even if it is acceptable for video data. To reduce the

error rate for the auxiliary data, transmitter **1'** can be configured to encode the auxiliary data in accordance with the invention. Optionally, transmitter **1'** can be configured also to encode the video data in accordance with the invention (or to be operable in a mode in which it encodes both the video data and auxiliary data in accordance with the invention). However, since data encoded in accordance with the invention (with a robust subset of a "full set" of code words) necessarily has a lower data transmission rate than the same data encoded in a conventional manner (using the same "full set" of code words, assuming that both streams of encoded bits are transmitted with the same clock frequency). In many applications, video data cannot practically be transmitted at an adequate rate if encoded in accordance with the invention. Thus, typical implementations of the FIG. **2** system will encode auxiliary data (but not video data) in accordance with the invention.

In a class of embodiments, transmitter **1'** is configured to encode the auxiliary data in accordance with the invention as follows. A subset of the full set of 10-bit TMDS code words is selected as the "inventive" code word set such that each transmitted stream of 10-bit words of encoded auxiliary data (consisting only of the inventive code words) has a pattern that is less susceptible to inter-symbol interference than is the pattern determined by a transmitted stream of a TMDS-encoded version of the same data (including not only inventive code words but also members of the full set that are not inventive code words).

In some embodiments, a 2^M-bit subset (where M<8) of the full set of 10-bit TMDS code words is selected to be the inventive code word set. Optionally, the inventive code word set also includes one or more code words of the full set that are used as guard band words. The 17 inventive code words (each comprising 10 bits) to be described below with reference to FIGS. **3** and **4** are an example of such a 2^M-bit subset (where M=4) supplemented by one additional guard band word. Receiver **2'** is implemented to decode each received one of the inventive 10-bit code words as an auxiliary data word of length M bits. Receiver **2'** performs the same decoding operations on the encoded auxiliary words received during blanking intervals that it performs on the conventionally encoded video words received during the active video periods. However, during the encoding of source auxiliary data (using the inventive code words), transmitter **1'** does not perform the conventional DC balancing steps that it performs during its conventional encoding of source video data (in which the eight least significant bits of the "N+1"th encoded video word are inverted, and the resulting nine bits are concatenated with a distinctive tenth, most significant bit when the cumulative DC drift of the N previous encoded video words reaches a predetermined threshold, and otherwise does not invert the eight least significant bits of the "N+1"th encoded video word and instead concatenates the word with another distinctive, tenth, most significant bit). Rather, transmitter **1'** is configured simply to replace each 4-bit source word of auxiliary data with the corresponding one of the inventive code words, regardless of the cumulative DC drift of the resulting stream of inventive code words (and regardless of whether the MSB of the inventive code word is a one or zero). The inventive code words are preferably chosen so that when the bits of a stream of the inventive code words are transmitted over a serial link as sequence of rising and falling voltage transitions, the bit pattern of such stream of the inventive code words is DC balanced (or is likely to be DC balanced) in the sense that the voltage drift that it determines over time is limited to an acceptable amount.

In other embodiments, transmitter **1'** does perform the same DC balancing steps during its encoding of source auxiliary data (using the inventive code words) and during its conventional encoding of source video data. This is taken into consideration in the selection of the inventive code word set. Specifically, each code word of the inventive code word set has a 9-bit base pattern that is a member of a selected subset of the 9-bit base pattern space of the full set of 10-bit TMDS code words, and during encoding of 4-bit words of source auxiliary data (to replace them with the inventive 10-bit code words), the eight least-significant bits of this 9-bit base pattern are either inverted and the resulting pattern concatenated with a tenth (and most significant) bit having a first value, or the base pattern is not inverted and is instead concatenated with a tenth (and most significant) bit having a second value, depending on whether the cumulative DC drift of the stream of previously encoded auxiliary words has reached a predetermined threshold. In these embodiments, receiver **2'** is implemented to perform the same decoding operations on the encoded auxiliary data words received during blanking intervals that it performs on the conventionally encoded video data words received during the active video periods, and then to map each 8-bit word (generated as a result of conventional decoding of one of the 10-bit encoded auxiliary data words) to one of the 2^M auxiliary data words each having M-bit length.

In the described embodiments of the FIG. **2** system, the size of the auxiliary data encoding space (the number of different auxiliary data words that can be encoded with the inventive code word set) is reduced from 2^8 (=256) to 2^M (where M<8) in accordance with the invention, and thus the effective rate at which the auxiliary data (encoded in accordance with the invention) can be transmitted is reduced from 8 bits per clock period per channel to M bits per clock period per channel. By reducing the value M (i.e., selecting a smaller inventive set of code words from the full set), a lower bit-error rate (BER) can be achieved but the data rate will also be reduced. Conversely, increasing the parameter M results in an increased data rate but at the cost of increased BER.

We next describe an embodiment of the inventive code word set with reference to FIGS. **3** and **4**. This code word set is a subset of the full set of conventional TMDS 10-bit code words, and is useful for encoding 4-bit words of auxiliary data for transmission over a TMDS (or TMDS-like) link over which 8-bit video words (conventionally encoded using the full set of TMDS 10-bit code words) are also transmitted, in cases when it is adequate to transmit the auxiliary data at half the data rate as the video data. Typically, 8-bit input words of binary auxiliary data are buffered, the four least-significant bits of each are encoded (e.g., in transmitter **1'** of FIG. **2**) as one of the sixteen 8-bit words "AD**0**-AD**15**" in the left column (labeled "Input D**7**-D**0**") of FIG. **4**, and the four most significant bits of each 8-bit input word are also encoded as the appropriate one of the sixteen 8-bit words AD**0**-AD**15**. Each of the words AD**0**-AD**15** has the hexadecimal representation shown in the center column of FIG. **4**. Each of the words AD**0**-AD**15** is then encoded (e.g., in transmitter **1'**) as the corresponding one of the 10-bit patterns shown in the right column of FIG. **4**.

In FIG. **4** (and FIG. **3**), the left bit of each code word is the LSB and (in the case of each 10-bit code word) is the first bit to be transmitted over the serial link. Also, the right bit of each code word is the MSB and (in the case of each 10-bit code word) is the last bit to be transmitted over the serial link.

For example, an input auxiliary data word 10000000 (whose LSB is 1) would be split into two halves (1000 and 0000) and the two halves then encoded as AD**1** and AD**0**, respectively. Then, the 8-bit word AD**0** is encoded as the 10-bit inventive word "0011100101" and the 8-bit word AD**1** is encoded as the 10-bit inventive word "0110001101." The two inventive words would then be serialized transmitted over the serial link sequentially, with the bits "0011100101" indicative of the "most significant" half (0000) of the input word being transmitted before the bits "0110001101" that are indicative of the least significant half (1000) of the input word. At the receiver, each 10-bit inventive word is decoded into one of the 8-bit words AD**0**-AD**15**, and the original 8-bit input auxiliary data words can be reconstructed from the recovered words AD**0**-AD**15** since there is a one-to-one mapping between each word AD**0**-AD**15** and one half (four bits) of each 8-bit input auxiliary data word.

Of course, the input auxiliary data asserted to the transmitter (e.g., transmitter **1'**) can be 4-bit words, in which case the transmitter would not need to split (or otherwise pack) received input auxiliary data words into 4-bit format before encoding them as a sequence of the words AD**0**-AD**15**. Alternatively, the input auxiliary data can be pre-encoded as a sequence of 8-bit words AD**0**-AD**15**, and the pre-encoded auxiliary data then provided to the transmitter in the form of a sequence of the 8-bit words AD**0**-AD**15**.

Typically, the encoded auxiliary data are transmitted in the same channels (CH**0**, CH**1**, and CH**2**) of a TMDS link in which video data are transmitted, but the auxiliary data are transmitted during the blanking intervals (in which DE=0) between the active video periods (in which DE=1) of video data transmission. FIGS. **5** and **6** are timing diagrams of signals transmitted during such an embodiment of the invention. The upper nine signals of FIG. **5** represent signals input to the transmitter during a blanking interval, and the lower three signals of FIG. **5** represent the auxiliary data (encoded using the 10-bit words of FIG. **4**) and encoded control and sync signals (to be discussed below) that are transmitted over channels CH**0**, CH**1**, and CH**2** during the blanking interval in response to the upper nine signals. Similarly, the upper nine signals of FIG. **6** represent signals input to the transmitter at the end of the blanking interval (of FIG. **5**) and during the active video period that follows such blanking interval, and the lower three signals of FIG. **6** represent the auxiliary data (encoded using the 10-bit words of FIG. **4**), video data (conventionally encoded), and encoded control and sync signals (to be discussed below) that are transmitted over channels CH**0**, CH**1**, and CH**2** in response to the upper nine signals.

In FIGS. **5** and **6**:

24-bit words of input data are provided to the encoding circuitry of the transmitter for encoding. FIG. **5** pertains to those of such words (each identified as D[23:0] in FIG. **5**) that are words of auxiliary data. FIG. **6** pertains to those of such words (each identified as D[23:0] in FIG. **6**) that are words of video data. Eight bits of each input word (D[23:16]) are encoded, serialized, and transmitted on channel CH**2** (as 10-bit encoded words CH**2**[0:9]), another eight bits of each such word (D[15:8]) are encoded, serialized, and transmitted on channel CH**1** (as 10-bit encoded words CH**1**[0:9]) and another eight bits of each such word (D[7:0]) are encoded, serialized, and transmitted on channel CH**0** (as 10-bit encoded words CH**0**[0:9]). In some implementations, the video data are in RGB format (and the red, green, and blue pixels are transmitted on channels CH**2**, CH**1**, and CH**0**, respectively). In view of this, channels CH**2**, CH**1**, and CH**0**, are sometimes referred to herein (such as in FIG. **3**) as the red (or "R") channel, the green (or "G" channel), and the blue (or "B") channel, respectively. Alternatively, the video data that are encoded (and then transmitted) are in luminance-chrominance format;

the waveform "DCK" indicates the data clock. During each cycle of the data clock, the ten bits of each one of the inventive code words indicative of auxiliary data (or a guard band), or each of the conventional TMDS 10-bit code words indicative of video data, are sequentially transmitted over the relevant one of channels CH**0**, CH**1**, and CH**2**. In an actual implementation, a clock having ten times the frequency of DCK (but in phase with DCK) would be used to clock the encoding, transmission, and decoding operations, and one code bit would be transmitted during each cycle of this faster clock;

the waveform "DE" (of FIG. **6**) is the video data enable signal, and the waveform "AUX DE" (of FIG. **5**) is the auxiliary data enable signal. When DE=1 and AUX DE=0, video data (identified as D[23:16], D[15:8], and D[7:0] in FIG. **6**) are encoded, and serialized 10-bit words of the encoded video are transmitted over channels CH**0**, CH**1**, and CH**2**. When DE=0 and AUX DE=1, auxiliary data (identified as D[23:16], D[15:8], and D[7:0] in FIG. **5**) are encoded, and serialized 10-bit words of the encoded auxiliary data are transmitted over channels CH**0**, CH**1**, and CH**2**. When DE=0 and AUX DE=0, the transmitter ignores signals asserted to its data inputs and instead encodes (as 10-bit TMDS code words) control bit pairs asserted to its control inputs (bits CTL**3** and CTL**2**, indicated as "CTL[3:2]" in FIGS. **5** and **6**, and bits CTL**1** and CTL**0**, indicated as "CTL[1:0]" in FIGS. **5** and **6**), serializes these code words, and transmits the serialized code words over channels CH**1** and CH**2**, and encodes (as 10-bit transition-maximized words) sync bit pairs (HSYNC and VSYNC) asserted to its sync inputs, serializes these code words, and transmits the serialized code words over channel CH**0**.

More specifically, each blanking interval (each interval in which DE=0) has at least three portions: an initial portion (a "front porch") followed by an auxiliary data portion followed by a final portion (a "back porch"). Optionally, there are two or more auxiliary data periods in a blanking interval (each comprising at least one auxiliary guard band word followed by a burst of a different channel of encoded auxiliary data), a front porch between the falling edge of DE (at the start of the blanking interval) and the start of the first auxiliary data portion, an additional front porch before each subsequent auxiliary data period in the blanking interval, and a back porch between the last auxiliary data period and the next active video period. During each front porch, repetitions of code words indicative of specific patterns of control bits CTL**3**, CTL**2**, CTL**1**, and CTL**0**, repetitions of code words indicative of any pattern of sync bits HSYNC and VSYNC, and optionally also initial bit patterns (e.g., patterns in the time interval labeled "Rsvd" in FIG. **5** at the start of the front porch of channels CH**2** and CH**1**) are transmitted. During the back porch, repetitions of code words indicative of other specific patterns of control bits CTL**3**, CTL**2**, CTL**1**, and CTL**0**, repetitions of code words indicative of any pattern of sync bits HSYNC and VSYNC, and optionally also initial bit patterns (e.g., patterns in the time interval labeled "Rsvd" in FIG. **6** at the start of the back porch of channels CH**2** and CH**1**) are transmitted. During the auxiliary data portion, the inventive code words (indicative of encoded auxiliary data) and guard band words are transmitted.

More specifically, the following signals are transmitted during the back porch (as indicated in FIGS. **3** and **6**): repetitions of a code word, "0010101011" indicative of CTL**3**=0, CTL**2**=0 are transmitted on CH**2** (preferably after an initial bit pattern in the "Rsvd" interval), repetitions of the same code word, "0010101011" indicative of CTL**1**=0, CTL**0**=0 are transmitted on CH**1** (preferably after an initial bit pattern), and repetitions of a code word indicative of one of the four possible combinations of sync bits HSYNC and VSYNC are transmitted on CH**0**. Normally, during the final 12 pixel clock cycles of the back porch (just before the 0-to-1 transition of DE as shown in FIG. **6**), both sync bits HSYNC and VSYNC have the value 0, so that the code word indicative of HSYNC=0, VSYNC=0 (namely the code word "0010101011" shown at the bottom of FIG. **6**) is transmitted over the channel CH**0**.

The following signals are transmitted during the front porch (as indicated in FIGS. **3** and **5**): repetitions of a code word, "1101010100" indicative of CTL**3**=0, CTL**2**=1 are transmitted on CH**2** (preferably after an initial bit pattern in the "Rsvd" interval), repetitions of the code word, "0010101010" indicative of CTL**1**=1, CTL**0**=0 are transmitted on CH**1** preferably after an initial bit pattern), and repetitions of a code word indicative of one of the four possible combinations of sync bits HSYNC and VSYNC are transmitted on CH**0**. Typically, during a "VSYNC" period of the front porch (the VSYNC window of FIG. **3**), code words of specific values of CTL**3**, CTL**2**, CTL**1**, CTL**0**, VSYNC, and HSYNC (as shown in FIG. **3**) are transmitted on channels CH**2**, CH**1**, and CH**0**.

Although FIGS. **5** and **6** have been described with reference to two data enable signals, "DE" and "AUX DE," it is contemplated that the transmitter can be implemented with a portion (a "core") configured to perform all the described encoding, serialization, and transmission in response to a single data enable signal (e.g., a combined enable signal indicative of the result of performing a logical "OR" operation on the signals DE and AUX DE), and a single set of data inputs (D[23:0]) indicative of either video or auxiliary data. Additional circuitry of the transmitter outside the core is configured to receive separate sets of auxiliary data (e.g., 24-bit auxiliary data words) and video data (e.g., 24-bit video data words), and both a video data enable signal DE, and an auxiliary data enable signal "AUX DE." The signals DE and AUX DE occur in the repeating sequence (DE=0, AUX DE=0), (DE=1, AUX DE=0), (DE=0, AUX DE=0), and (DE=0, AUX DE=1), and the additional circuitry includes logic circuitry that "ORs" together the signals DE and AUX DE to produce a combined data enable signal. The additional circuitry also packs the auxiliary data into 4-bit format, encodes each 4-bit portion of the auxiliary data as one of the words AD**0**-AD**15** shown in FIG. **4**, adds guard band words with appropriate timing into the stream of AD**0**-AD**15** auxiliary data words, and replaces (with appropriate timing) words of the video data with video guard band words. The additional circuitry asserts alternating bursts of the video data (with video guard band words) and auxiliary data (with guard band words) to the core, and also asserts the combined data enable signal to the core. The core performs all the encoding, serialization, and transmission operations described with reference to FIGS. **5** and **6** in response to the combined data enable signal (rather than separate DE and AUX DE signals) and the alternating bursts of video and auxiliary data.

In each of at least one channel of a serial link (e.g., in each of channels CH**2** and CH**1** in the case of data transmission in accordance with the invention over a TMDS link), an appropriate one of the inventive code words is (or two or more appropriate ones of the inventive guard band words are) preferably transmitted (as a guard band word or set of guard band words) at the start of each burst of encoded auxiliary data (i.e., immediately after each "front porch" of each blanking interval), at the end of each burst of encoded auxiliary data (i.e., immediately before each "back porch" of each blanking interval), and at the start of each burst of encoded video data (i.e., immediately after each "back porch" of each blanking interval).

Each guard band word should have a bit pattern which allows the receiver to more reliably identify the relevant transition (indicated by the guard band word or words) between encoded control (or sync) word transmission and encoded data transmission. Thus, an additional factor in the selection of the inventive code word set is that it preferably includes appropriate guard band words. For example, the set of 17 inventive code words shown in FIG. **4** includes a special auxiliary guard band word (having bit pattern "1100110010," and shown in FIG. **4** as the uppermost one of the 17 code words shown) that is used to identify the start of an auxiliary data burst. As shown in FIG. **5**, two repetitions of this "pre-data" auxiliary guard band word are preferably transmitted at the start of each burst of encoded auxiliary data (i.e., just after each front porch) in each of channels CH**2** and CH**1**. Since the last bit of each specific encoded control word transmitted in channels CH**2** and CH**1** (during the front porch) is "0" as explained above, the first transmitted bit of the code word chosen as the pre-data auxiliary guard band word is "1" to increase the reliability with which the receiver can identify the start of a transmitted burst of auxiliary data.

The set of 17 inventive code words shown in FIG. **4** also includes a word (the word "0011001101" that corresponds to input word AD**11**) that is used to identify the end of an auxiliary data burst, and is also used as a video guard band word. As shown in FIG. **5**, two repetitions of this "post-data" auxiliary guard band word are preferably transmitted at the end of each burst of encoded auxiliary data (i.e., just before each back porch) in each of channels CH**2** and CH**1**.

The pre-data auxiliary guard band word need not be repeated (transmitted twice) at the start of each auxiliary data burst, and the post-data auxiliary guard band word need not be repeated at the end of each auxiliary data burst. In the preferred embodiment (indicated by FIG. **5**), each is repeated in order to allow the receiver more easily to recognize and correct for data shift errors between channels that can occur during transmission and recovery of the data (e.g., error in the phase of the received data on channel CH**1** relative to that of the data received on channel CH**2**). In other embodiments of the invention, an auxiliary guard band word is repeated more than twice (or is transmitted only once) at the start of each auxiliary data burst and/or more than twice (or is transmitted only once) at the end of each auxiliary data burst.

With reference to FIG. **4**, the inventive code word "0011001101" (that corresponds to input word AD**11**) is used as a video guard band word to identify the start of a video data burst, in addition to being used as a code word for encoding the four-bit quantity of auxiliary data indicated by input word AD**11**, and as a post-data auxiliary guard band word. As shown in FIG. **6**, two repetitions of this video guard band word are preferably transmitted at the start of each burst of encoded video data (i.e., just after each back porch). Since the last two bits of the encoded control or sync word transmitted in each of channels CH**0**, CH**1**, and CH**2** (at the end of the back porch) are likely to be "11" as

explained above, the first two transmitted bits of the video guard band word are chosen to be "00" to increase the reliability with which the receiver can identify the start of a transmitted burst of video data.

The video guard band word need not be repeated (transmitted twice) at the start of each video data burst. In the preferred embodiment shown in FIG. **6**, it is repeated in order to ensure transmission (on each of channels CH**0**, CH**1**, and CH**2**) of code words indicative of an even number of pixels during the burst. In other embodiments, a video guard band word is repeated more than twice (or is transmitted only once) at the start of each video data burst.

In some embodiments of the invention, two (or more than two) streams of video data are transmitted (over one, two, or more than two channels). For example, two or more streams of video data can be transmitted in time-multiplexed fashion over each of one or more of Channels **0**, **1**, and **2** of FIG. **2**. If bursts of different streams of video data are sequentially transmitted over one channel, different video guard band words can be transmitted at the start (and/or the end) of each burst, with each different stream being identified by a different video guard band word. Similarly, two (or more than two) streams of auxiliary data can be transmitted over one, two, or more than two channels). If bursts of different streams of auxiliary data are sequentially transmitted over one channel, different auxiliary guard band words can be transmitted at the start (and/or the end) of each burst, with each different stream being identified by a different guard band word.

Where encoded data are transmitted serially over multiple independent channels, DE shifts in individual channels can be corrected independently (in accordance with the invention) by using guard band words in each channel. Since there can be misalignment between the DE transitions indicated by the bits transmitted over multiple channels of a TMDS link (or TMDS-like link or other serial link) by one pixel clock cycle in either direction (due to ISI or other noise sources on the link), a set of identical guard band words (each a member of the set of inventive code words) is preferably transmitted in accordance with the invention at the start or end of each burst of data encoded using the inventive code words that is transmitted over each channel (e.g., at the end of the front porch of each channel, and/or at the start of the back porch of each channel, and/or at the end of the back porch of each channel). This can improve the channel to channel alignment and data integrity. The need to have available the appropriate number of guard band words is a factor in the selection of the inventive set of code words.

The purpose of repeating the transmission of a guard band word (either at the transition between an expected bit pattern and a burst of data encoded in accordance with the invention following such pattern, or at the transition between a burst of data encoded in accordance with the invention and an expected bit pattern that follows such data) is to prevent two types of misidentification of transitions: identifying the transition too early and identifying the transition too late. By transmitting a repeating sequence of N guard band words, the invention prevents such pixel shift errors up to N−1 pixels in either direction. For example, if a sequence of N post-data guard band words is appended to an encoded data burst, the invention ensures that when there is an N−1 pixel shift to the left, the last data value is not lost (only the post-data guard band word is lost). Generally, a sequence of only N−1 post-data guard band words is needed for use with a sequence of N pre-data guard band words.

In the preferred embodiment (indicated by FIG. **5**), the auxiliary guard band words transmitted at the start and end of each auxiliary data burst on channels CH**2** and CH**1** are not transmitted at the start and end of each auxiliary data burst on channel CH**0**. Rather, special encoding is used to determine the first two and last two 10-bit inventive code words transmitted in each auxiliary data burst on channel CH**0**. Specifically, each of the first input auxiliary data packet to be encoded and the last input auxiliary data packet to be encoded comprises two bits (whereas all the other packet comprise four bits as described above). The first 2-bit input auxiliary packet is encoded as one of the words AD**0**, AD**1**, AD**2**, and AD**3** in FIG. **4**. The first two 10-bit words transmitted in the burst are repeated versions of the inventive code word that is indicative of this one of words AD**0**, AD**1**, AD**2**, and AD**3** (and are thus indicative of the first two bits of input auxiliary data). Similarly, the last 2-bit input auxiliary packet is encoded as one of the words AD**0**, AD**1**, AD**2**, and AD**3** in FIG. **4**. The last two 10-bit words transmitted in the burst are repeated versions of the inventive code word that is indicative of this one of words AD**0**, AD**1**, AD**2**, and AD**3** (and are thus indicative of the last two bits of input auxiliary data.

More generally, control or synchronization bits (e.g., the 10-bit control characters indicative of bits CTL**0**:CTL**1** or CTL**2**:CTL**3** in the TMDS specification) can produce different errors on video (or auxiliary) data bits that are transmitted just after the control characters, when ISI is present on the serial data transmission channel. This is preferably recognized and used as a factor in selecting the inventive code word set for use in transmitting the video (or auxiliary) data. Alternatively, the control codes sent just before the data (encoded in accordance with the invention) are controlled to reduce the ISI effect.

In other embodiments of the invention, bursts of encoded auxiliary data and bursts of encoded video data are transmitted over a serial link (which need not be a TMDS link), and the auxiliary data are encoded in accordance with the invention using a set of inventive code words. The set of inventive code words includes a "video" guard band word that is transmitted at the start of each encoded video data burst, and an "auxiliary" guard band word that is transmitted at the start of each encoded auxiliary data burst. In some implementations, the video guard band word is also used for a second purpose: to encode auxiliary data. In preferred implementations of such embodiments, the encoded video data are transmitted during active video periods in which a control signal "DE" is high (DE=1), and encoded control (or synchronization) signals and encoded auxiliary data are transmitted during blanking intervals (in which DE=0) between active video periods. A video guard band word is transmitted at the start of each active video period. Each blanking interval comprises a preamble (or "front porch") period (between the falling edge of DE and the start of a burst of auxiliary data) in which control (or sync) signals of a specific type are transmitted, an auxiliary data period (after the preamble period) comprising an auxiliary guard band word followed by a burst of encoded auxiliary data, and a "back porch" period between the auxiliary data period and the next active video period. In general, the purpose of using guard band words in accordance with the invention is to guarantee that the receiver can recognize the transition between the first guard band word transmitted at the start of an encoded data burst and the last bit transmitted before such guard band word, and between the last guard band word transmitted at the end of an encoded data burst and the first bit transmitted after such guard band word.

In a class of embodiments of the invention, a conventional encoding algorithm is used to encode primary data (which

can but need not be video data) for transmission in bursts over a serial link, and auxiliary data (e.g., audio data or data of another type that can be transmitted with a lower data rate than the primary data) are encoded in accordance with the invention for transmission in bursts (between bursts of the encoded primary data) over a serial link. The full set of code words used for encoding the primary data has at least one code word for each of 2^N different words of the primary data (sometimes referred to as source data words). The inventive subset of such full set has at least one code word for each of not more than 2^M different words (where M<N) of the auxiliary data (also referred to sometimes as source data words). The auxiliary data are buffered and packed into M-bit format (i.e., into words each consisting of M bits). Each possible value of the M-bit source data has a preselected code in the 2^M word space provided by the inventive code words. The M-bit words of auxiliary data are mapped to inventive code words in the 2^M word space which are then transmitted over the link. The process by which the inventive set of code words is selected from a full set of code words is very important. The inventive set of code words is selected such that each stream of encoded data (comprising only inventive code words) transmitted over a serial link has a bit pattern that is less susceptible to ISI during transmission than is the bit pattern determined by a transmitted, conventionally encoded version of the same data (comprising not only inventive code words but also members of the full set that are not inventive code words). In general, the best choice for the particular inventive code words selected from a full set of binary code words depends on the particular coding implemented by the full set (i.e., the details of which bits of each code word in the full set are zeroes and which are ones). In preferred embodiments, the inventive code words are selected to be those whose serial patterns (during transmission over a serial link) have fewer contiguous zeros and ones (and thus are less susceptible to ISI during transmission) than do those code words in the full set that are not selected.

In choosing which of the inventive code words to employ to transmit encoded data (e.g. auxiliary data distinct from video data) in accordance with the invention, it is important to consider that some bits (of multi-bit encoded words) present greater risks of error than other such bits. For example, when using TMDS-encoded words to transmit auxiliary data, the DC balancing bits and transition control bits (e.g., bits Q[9] and Q[8]) present greater error risks than do the other bits. Any bit error occurring during processing of the DC balancing and transition control bits can affect other bits of the multi-bit encoded words. Hence a one-bit error in one of the critical bits is translated into a burst error. This effect is preferably considered in selecting the inventive code words from a full set of TMDS-encoded words.

It should be understood that while certain forms of the present invention are illustrated and described herein, the invention is defined by the claims and is not to be limited to the specific embodiments described and shown.

What is claimed is:

1. A communication system, including:

a receiver;

a transmitter; and

a serial link between the transmitter and the receiver, wherein the transmitter is coupled to receive input data, configured to generate a sequence of selected code words by encoding the input data, and configured to transmit the sequence of selected code words to the receiver over the serial link, wherein each of the selected code words is a member of a robust subset of a full code word set, the input data can be encoded as a conventional sequence of code words of the full code word set, and the sequence of selected code words is less susceptible to inter-symbol interference during transmission over the link than would be the conventional sequence of code words, wherein the input data are auxiliary data, the transmitter is coupled to receive video data and configured to generate a sequence of video code words by encoding the video data, and the transmitter is configured to transmit to the receiver over the serial link a first burst of the video code words followed by a burst of the selected code words followed by a second burst of the video code words, wherein each of the video code words is a member of the full code word set and at least one of the video code words is not a member of the robust subset.

2. The system of claim **1**, wherein the transmitter is also coupled to receive control bits, configured to generate bursts of encoded control words by encoding the control bits, and configured to transmit to the receiver over the serial link a first burst of the encoded control words between the first burst of the video code words and the burst of the selected code words, and a second burst of the encoded control words between the burst of the selected code words and the second burst of the video code words.

3. The system of claim **2**, wherein the selected code words include at least one guard band word, the burst of the selected code words has an initial word, and the initial word is the guard band word.

4. The system of claim **2**, wherein the selected code words include at least one guard band word, the burst of the selected code words has an initial set of words, and each word of the initial set of words is one said guard band word.

5. The system of claim **2**, wherein the selected code words include at least one guard band word, the burst of the selected code words has a final word, and the final word is the guard band word.

6. The system of claim **2**, wherein the selected code words include at least one guard band word, the burst of the selected code words has a final set of words, and each word of the final set of words is one said guard band word.

7. The system of claim **2**, wherein the serial link is a TMDS link, and the selected code words consist of seventeen different, transition-minimized TMDS code words, including at least one transition-minimized TMDS code word used as a guard band word.

8. The system of claim **2**, wherein the selected code words include at least two guard band words, including a first guard band word and a second guard band word, the second burst of the video code words has an initial word, the initial word of the second burst of the video code words is the first guard band word, the burst of the selected code words has an initial word, and the initial word of the burst of the selected code words is the second guard band word.

9. The system of claim **8**, wherein the serial link is a TMDS link, and the selected code words consist of seventeen different, transition-minimized TMDS code words, including one transition-minimized TMDS code word used only as said second guard band word and another transition-minimized TMDS code word used as said first guard band and also used as one of the selected code words in said burst of the selected code words.

10. The system of claim **1**, wherein the input data are auxiliary data, the transmitter is coupled to receive video data and configured to generate a sequence of video code words by encoding the video data, and the transmitter is configured to transmit to the receiver over the serial link the

first burst of the video code words followed by at least two bursts of the selected code words followed by the second burst of the video code words.

11. The system of claim **10**, wherein the transmitter is also coupled to receive control bits, configured to generate bursts of encoded control words by encoding the control bits, and configured to transmit to the receiver over the serial link a first burst of the encoded control words between the first burst of the video code words and the bursts of the selected code words, and a second burst of the encoded control words between the bursts of the selected code words and the second burst of the video code words.

12. The system of claim **11**, wherein the selected code words include at least one guard band word, a first one of the bursts of the selected code words has an initial word, and the initial word is the guard band word.

13. The system of claim **11**, wherein the selected code words include at least one guard band word, a first one of the bursts of the selected code words has an initial set of words, and each word of the initial set of words is one said guard band word.

14. A communication system, including:

a receiver;

a transmitter; and

a serial link between the transmitter and the receiver, wherein the transmitter is coupled to receive input data, configured to generate a sequence of selected code words by encoding the input data, and configured to transmit the sequence of selected code words to the receiver over the serial link, wherein each of the selected code words is a member of a robust subset of a full code word set, the input data can be encoded as a conventional sequence of code words of the full code word set, and the sequence of selected code words is less susceptible to inter-symbol interference during transmission over the link than would be the conventional sequence of code words, wherein the input data are auxiliary data, the transmitter is coupled to receive video data and configured to generate a sequence of video code words by encoding the video data, and the transmitter is configured to transmit to the receiver over the serial link a burst of the selected code words followed by a burst of the video code words, wherein each of the video code words is a member of the full code word set and at least one of the video code words is not a member of the robust subset.

15. The system of claim **14**, wherein the transmitter is also coupled to receive control bits, configured to generate bursts of encoded control words by encoding the control bits, and configured to transmit to the receiver over the serial link a burst of the encoded control words between the burst of the selected code words and the burst of the video code words.

16. The system of claim **15**, wherein the selected code words include at least one guard band word, the burst of the video code words has an initial word, and the initial word is the guard band word.

17. The system of claim **15**, wherein the selected code words include at least one guard band word, the burst of the video code words has an initial set of words, and each word of the initial set of words is one said guard band word.

18. A communication system, including:

a receiver;

a transmitter; and

a serial link between the transmitter and the receiver, wherein the transmitter is coupled to receive input data, configured to generate a sequence of selected code words by encoding the input data, and configured to transmit the sequence of selected code words to the receiver over the serial link, wherein each of the selected code words is a member of a robust subset of a full code word set, the input data can be encoded as a conventional sequence of code words of the full code word set, and the sequence of selected code words is less susceptible to inter-symbol interference during transmission over the link than would be the conventional sequence of code words, wherein each of the selected code words is an L-bit binary word, each of at least a subset of the selected code words is indicative of an M-bit word of the input data, L=10, M=4, and the transmitter is coupled to receive source words of the input data, where each of the source words comprises N bits, N is less than L, and N is greater than M, and the transmitter is configured to pack the source words into M-bit words of the input data and to encode each of the M-bit words of the input data as one of the selected code words.

19. A communication system, including:

a receiver;

a transmitter; and

a serial link between the transmitter and the receiver, wherein the transmitter is coupled to receive input data, configured to generate a sequence of selected code words by encoding the input data, and configured to transmit the sequence of selected code words to the receiver over the serial link, wherein each of the selected code words is a member of a robust subset of a full code word set, the input data can be encoded as a conventional sequence of code words of the full code word set, and the sequence of selected code words is less susceptible to inter-symbol interference during transmission over the link than would be the conventional sequence of code words, wherein each of the selected code words is indicative of L binary bits, and the selected code words have fewer contiguous zero bits and contiguous one bits per code word on the average than do the code words of the full code word set excluding the selected code words.

20. A communication system, including:

a receiver;

a transmitter; and

a serial link between the transmitter and the receiver, wherein the transmitter is coupled to receive input data, configured to generate a sequence of selected code words by encoding the input data, and configured to transmit the sequence of selected code words to the receiver over the serial link, wherein each of the selected code words is a member of a robust subset of a full code word set, the input data can be encoded as a conventional sequence of code words of the full code word set, and the sequence of selected code words is less susceptible to inter-symbol interference during transmission over the link than would be the conventional sequence of code words, wherein each of the selected code words is indicative of a different sequence of binary bits, the transmitter is configured to transmit the sequence of selected code words to the receiver over the serial link as a sequence of rising and falling voltage transitions, and the selected code words have bit patterns that implement DC balancing by limiting voltage drift of the serial link during transmission of said sequence of selected code words to a predetermined amount.

21. A communication system, including:

a receiver;

a transmitter; and

a serial link, a second serial link, and a third serial link between the transmitter and the receiver, wherein the transmitter is coupled to receive input data and video data, configured to generate sequences of selected code words by encoding the input data and to generate sequences of video code words by encoding the video data, and configured to transmit to the receiver over the serial link a burst of the selected code words followed by a burst of the video code words, to transmit to the receiver over the second serial link a second burst of the selected code words followed by a second burst of the video code words, and to transmit to the receiver over the third serial link a third burst of the selected code words followed by a third burst of the video code words,

wherein each of the selected code words is a member of a robust subset of a full code word set, each of the video code words is a member of the full code word set, and at least one of the video code words is not a member of the robust subset, and

wherein the input data determined by the burst of the selected code words can be encoded as a first conventional sequence of the code words of the full code word set, the input data determined by the second burst of the selected code words can be encoded as a second conventional sequence of the code words of the full code word set, and the input data determined by the third burst of the selected code words can be encoded as a third conventional sequence of the code words of the full code word set, and wherein said burst of the selected code words is less susceptible to inter-symbol interference during transmission over the serial link than would be the first conventional sequence, said second burst of the selected code words is less susceptible to inter-symbol interference during transmission over the second serial link than would be the second conventional sequence, and said third burst of the selected code words is less susceptible to inter-symbol interference during transmission over the third serial link than would be the third conventional sequence.

22. The system of claim **21**, wherein the transmitter is also coupled to receive control bits, configured to generate sequences of encoded control words by encoding the control bits, and configured to transmit to the receiver over the serial link a burst of the encoded control words between the burst of the selected code words and the burst of the video code words, to transmit to the receiver over the second serial link a second burst of the encoded control words between the second burst of the selected code words and the second burst of the video code words, and to transmit to the receiver over the third serial link a third burst of the encoded control words between the third burst of the selected code words and the third burst of the video code words.

23. The system of claim **21**, wherein the serial link is a first video channel of a TMDS link, the second serial link is a second video channel of the TMDS link, and the third serial link is a third video channel of the TMDS link.

24. The system of claim **23**, wherein the selected code words consist of seventeen different TMDS code words, including at least one TMDS code word used only as a guard band word.

25. The system of claim **23**, wherein the selected code words consist of seventeen, different, transition-minimized TMDS code words, including at least one transition-minimized TMDS code word used only as a guard band word.

26. A transmitter for use in data transmission over a serial link, said transmitter including:

at least one input for receiving input data;

an output configured to be coupled to a channel of the link; and

circuitry, coupled to each said input and to the output, and configured to generate a sequence of selected code words by encoding the input data and to assert the sequence of selected code words to the output in response to the input data, wherein each of the selected code words is a member of a robust subset of a full code word set, the input data can be encoded as a conventional sequence of code words of the full code word set, and the sequence of selected code words is less susceptible to inter-symbol interference during transmission over the link than would be the conventional sequence of code words, wherein the input data include auxiliary data and video data, and the circuitry is configured to generate a sequence of video code words by encoding the video data, and to assert to the output a first burst of the video code words followed by a burst of the selected code words followed by a second burst of the video code words, wherein each of the video code words is a member of the full code word set and at least one of the video code words is not a member of the robust subset.

27. The transmitter of claim **26**, wherein the circuitry is also coupled to receive control bits, configured to generate bursts of encoded control words by encoding the control bits, and to assert to the output a first burst of the encoded control words between the first burst of the video code words and the burst of the selected code words, and a second burst of the encoded control words between the burst of the selected code words and the second burst of the video code words.

28. The transmitter of claim **27**, wherein the selected code words include at least one guard band word, the burst of the selected code words has an initial word, and the initial word is the guard band word.

29. The transmitter of claim **27**, wherein the selected code words include at least one guard band word, the burst of the selected code words has an initial set of words, and each word of the initial set of words is one said guard band word.

30. The transmitter of claim **27**, wherein the selected code words include at least one guard band word, the burst of the selected code words has a final word, and the final word is the guard band word.

31. The transmitter of claim **27**, wherein the selected code words include at least one guard band word, the burst of the selected code words has a final set of words, and each word of the final set of words is one said guard band word.

32. The transmitter of claim **27**, wherein the serial link is a TMDS link, and the selected code words consist of seventeen different, transition-minimized TMDS code words, including at least one transition-minimized TMDS code word used as a guard band word.

33. The transmitter of claim **27**, wherein the selected code words include at least two guard band words, including a first guard band word and a second guard band word, the second burst of the video code words has an initial word, the initial word of the second burst of the video code words is the first guard band word, the burst of the selected code words has an initial word, and the initial word of the burst of the selected code words is the second guard band word.

34. The transmitter of claim **33**, wherein the serial link is a TMDS link, and the selected code words consist of seventeen different, transition-minimized TMDS code words, including one transition-minimized TMDS code word used only as said second guard band word and another transition-minimized TMDS code word used as said first guard band and also used as one of the selected code words in said burst of the selected code words.

35. The transmitter of claim **26**, wherein the serial link is a TMDS link, and the selected code words consist of seventeen different TMDS code words, including at least one TMDS code word used only as a guard band word.

36. The transmitter of claim **35**, wherein the selected code words consist of seventeen different, transition-minimized TMDS code words, including at least one transition-minimized TMDS code word used only as the guard band word.

37. The transmitter of claim **26**, wherein the circuitry is configured to assert to the output the first burst of the video code words followed by at least two bursts of the selected code words followed by the second burst of the video code words.

38. A transmitter for use in data transmission over a serial link, said transmitter including:

at least one input for receiving input data;

an output configured to be coupled to a channel of the link; and

circuitry, coupled to each said input and to the output, and configured to generate a sequence of selected code words by encoding the input data and to assert the sequence of selected code words to the output in response to the input data, wherein each of the selected code words is a member of a robust subset of a full code word set, the input data can be encoded as a conventional sequence of code words of the full code word set, and the sequence of selected code words is less susceptible to inter-symbol interference during transmission over the link than would be the conventional sequence of code words, wherein each of the selected code words is an L-bit binary word, each of at least a subset of the selected code words is indicative of an M-bit word of the input data, L=10, M=4, and the circuitry is coupled to receive source words of the input data, where each of the source words comprises N bits, N is less than L, and N is greater than M, and the circuitry is configured to pack the source words into M-bit words of the input data and to encode each of the M-bit words of the input data as one of the selected code words.

39. A transmitter for use in data transmission over a serial link, said transmitter including:

at least one input for receiving input data;

an output configured to be coupled to a channel of the link; and

circuitry, coupled to each said input and to the output, and configured to generate a sequence of selected code words by encoding the input data and to assert the sequence of selected code words to the output in response to the input data, wherein each of the selected code words is a member of a robust subset of a full code word set, the input data can be encoded as a conventional sequence of code words of the full code word set, and the sequence of selected code words is less susceptible to inter-symbol interference during transmission over the link than would be the conventional sequence of code words, wherein each of the selected code words is indicative of a sequence of L binary bits, and the selected code words have fewer contiguous zero bits and contiguous one bits per code word on the average than do the code words of the full code word set excluding the selected code words.

40. A transmitter for use in data transmission over a serial link, said transmitter including:

at least one input for receiving input data;

an output configured to be coupled to a channel of the link; and

circuitry, coupled to each said input and to the output, and configured to generate a sequence of selected code words by encoding the input data and to assert the sequence of selected code words to the output in response to the input data, wherein each of the selected code words is a member of a robust subset of a full code word set, the input data can be encoded as a conventional sequence of code words of the full code word set, and the sequence of selected code words is less susceptible to inter-symbol interference during transmission over the link than would be the conventional sequence of code words, wherein each of the selected code words is indicative of a different sequence of binary bits, the circuitry is configured to assert the sequence of selected code words as a sequence of rising and falling voltage transitions, and the selected code words have bit patterns that implement DC balancing by limiting voltage drift of the serial link during transmission of said sequence of selected code words to a predetermined amount.

41. A method for encoding data for transmission over a serial link, said method including the steps of:

(a) providing words of input data capable of being encoded as a conventional sequence of code words of a full code word set;

(b) generating a sequence of selected code words by encoding the input data, wherein each of the selected code words is a member of a robust subset of the full code word set, and the sequence of selected code words is less susceptible to inter-symbol interference during transmission over the link than would be the conventional sequence of code words;

generating bursts of encoded control words by encoding control bits; and

transmitting over the link a first burst of the encoded control words between a first burst of the video code words and the burst of the selected code words, and a second burst of the encoded control words between the burst of the selected code words and a second burst of the video code words.

42. The method of claim **41**, wherein the selected code words include at least one guard band word, the burst of the selected code words has an initial word, and the initial word is the guard band word.

43. The method of claim **41**, wherein the selected code words include at least one guard band word, the burst of the selected code words has an initial set of words, and each word of the initial set of words is one said guard band word.

44. The method of claim **41**, wherein the selected code words include at least one guard band word, the burst of the selected code words has a final word, and the final word is the guard band word.

45. The method of claim **41**, wherein the selected code words include at least one guard band word, the burst of the selected code words has a final set of words, and each word of the final set of words is one said guard band word.

46. The method of claim **41**, wherein the selected code words consist of seventeen different, transition-minimized

TMDS code words, including at least one transition-minimized TMDS code word used as a guard band word.

47. The method of claim **41**, wherein the selected code words include at least two guard band words, including a first guard band word and a second guard band word, the second burst of the video code words has an initial word, the initial word of the second burst of the video code words is the first guard band word, the burst of the selected code words has an initial word, and the initial word of the burst of the selected code words is the second guard band word.

48. The method of claim **47**, wherein the selected code words consist of seventeen different, transition-minimized TMDS code words, including one transition-minimized TMDS code word used only as said second guard band word and another transition-minimized TMDS code word used as said first guard band and also used as one of the selected code words in said burst of the selected code words.

49. The method of claim **41**, wherein the input data are auxiliary data, and also including the steps of:

generating a sequence of video code words by encoding video data; and

transmitting over the link a first burst of the video code words followed by a burst of the selected code words followed by a second burst of the video code words, wherein each of the video code words is a member of the full code word set and at least one of the video code words is not a member of the robust subset.

50. The method of claim **41**, wherein the input data are auxiliary data, and also including the steps of:

generating a sequence of video code words by encoding video data; and

transmitting over the link a first burst of the video code words followed by at least two bursts of the selected code words followed by a second burst of the video code words.

51. A method for encoding data for transmission over a serial link, said method including the steps of:

(a) providing words of input data capable of being encoded as a conventional sequence of code words of a full code word set; and

(b) generating a sequence of selected code words by encoding the input data, wherein each of the selected code words is a member of a robust subset of the full code word set, and the sequence of selected code words is less susceptible to inter-symbol interference during transmission over the link than would be the conventional sequence of code words, wherein each of the selected code words is an L-bit binary word, each of at least a subset of the selected code words is indicative of an M-bit word of the input data, L=10, M=4, and step (a) includes the step of providing source words of the input data, where each of the source words comprises N bits, N is less than L, and N is greater than M, and step (b) includes the steps of packing the source words into M-bit words of the input data and encoding each of the M-bit words of the input data as one of the selected code words.

52. A method for encoding data for transmission over a serial link, said method including the steps of:

(a) providing words of input data capable of being encoded as a conventional sequence of code words of a full code word set; and

(b) generating a sequence of selected code words by encoding the input data, wherein each of the selected code words is a member of a robust subset of the full code word set, and the sequence of selected code words is less susceptible to inter-symbol interference during transmission over the link than would be the conventional sequence of code words, wherein each of the selected code words is indicative of a sequence of L binary bits, and the preferred words have fewer contiguous zero bits and contiguous one bits per code word on the average than do the non-preferred words of the full set.

53. A method for encoding data for transmission over a serial link, said method including the steps of:

(a) providing words of input data capable of being encoded as a conventional sequence of code words of a full code word set; and

(b) generating a sequence of selected code words by encoding the input data, wherein each of the selected code words is a member of a robust subset of the full code word set, and the sequence of selected code words is less susceptible to inter-symbol interference during transmission over the link than would be the conventional sequence of code words, wherein each of the selected code words is indicative of a different sequence of binary bits, and also including the step of:

transmitting the sequence of selected code words over the serial link as a sequence of rising and falling voltage transitions, wherein the selected code words have bit patterns that implement DC balancing by limiting voltage drift of the serial link during transmission of said sequence of selected code words to a predetermined amount.

* * * * *

EXHIBIT 2

US009036010B2

(12) **United States Patent**
Shepherd

(10) **Patent No.: US 9,036,010 B2**
(45) **Date of Patent: May 19, 2015**

(54) **TRANSPORT OF STEREOSCOPIC IMAGE DATA OVER A DISPLAY INTERFACE**

(75) Inventor: **Nicoll Burleigh Shepherd**, Coulsdon (GB)

(73) Assignee: **Koninklijke Philips N.V.**, Eindhoven (NL)

(*) Notice: Subject to any disclaimer, the term of this patent is extended or adjusted under 35 U.S.C. 154(b) by 425 days.

(21) Appl. No.: **12/808,685**

(22) PCT Filed: **Dec. 15, 2008**

(86) PCT No.: **PCT/IB2008/055305**

§ 371 (c)(1), (2), (4) Date: **Jun. 17, 2010**

(87) PCT Pub. No.: **WO2009/077969**

PCT Pub. Date: **Jun. 25, 2009**

(65) **Prior Publication Data**

US 2010/0315489 A1 Dec. 16, 2010

(30) **Foreign Application Priority Data**

Dec. 18, 2007 (EP) 07123461

(51) **Int. Cl.**
H04N 13/02 (2006.01)
H04N 13/00 (2006.01)

(52) **U.S. Cl.**
CPC ***H04N 13/0048*** (2013.01); ***H04N 13/0059*** (2013.01); *H04N 2213/003* (2013.01)

(58) **Field of Classification Search**
USPC 348/46
See application file for complete search history.

(56) **References Cited**

U.S. PATENT DOCUMENTS

6,914,637	B1 *	7/2005	Wolf et al.	348/473
2002/0009137	A1	1/2002	Nelson et al.	
2005/0146521	A1 *	7/2005	Kaye et al.	345/419
2006/0044388	A1 *	3/2006	Kim et al.	348/42
2006/0192776	A1 *	8/2006	Nomura et al.	345/419
2006/0279750	A1 *	12/2006	Ha	358/1.2
2007/0139769	A1	6/2007	DeCusatis et al.	
2007/0296859	A1	12/2007	Suzuki	

FOREIGN PATENT DOCUMENTS

JP	2003111101	A	4/2003
JP	2006295289	A	10/2006
JP	2007325101	A	12/2007

(Continued)

Primary Examiner — Dave Czekaj
Assistant Examiner — Nam Pham

(57) **ABSTRACT**

A digital display interface (**40**) connects a first audio-visual device (**10**) to a second audio-visual device (**20**). Stereoscopic image data is transmitter over the display interface (**40**). Components of stereoscopic image data are multiplexed and inserted into an image data carrying element. An existing deep color mode can be re-used for this purpose. Signaling information to help identify or decode the stereoscopic image data is carried in auxiliary data carrying elements. Stereoscopic image data can be distributed between image data carrying data elements and auxiliary data carrying data elements. Auxiliary data carrying elements can be transmitted in horizontal or vertical blanking periods, and can comprise HDMI Data Island Packets. Stereoscopic image data can be sent over an auxiliary data channel. The auxiliary data channel can form part of the same cable as is used to carry a primary channel of the display interface, a separate cable, or a wireless link.

18 Claims, 3 Drawing Sheets

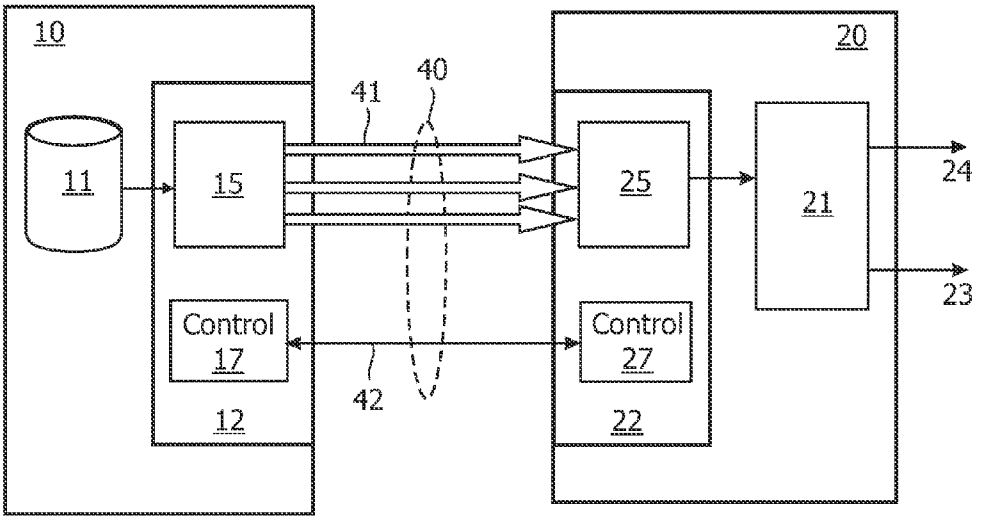

(56) **References Cited**

FOREIGN PATENT DOCUMENTS

JP	2008117289	A	5/2008
WO	2006137006	A2	12/2006
WO	2007069195	A2	6/2007

* cited by examiner

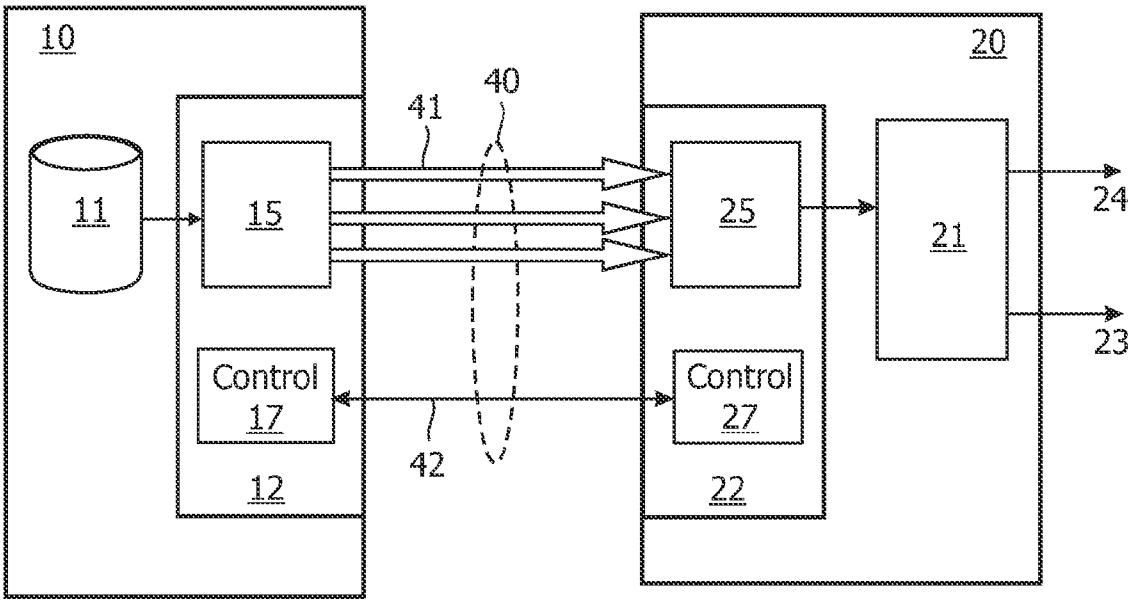
10
11
15
Control
17
12
41
40
42
20
25
21
Control
27
22
24
23

FIG. 1

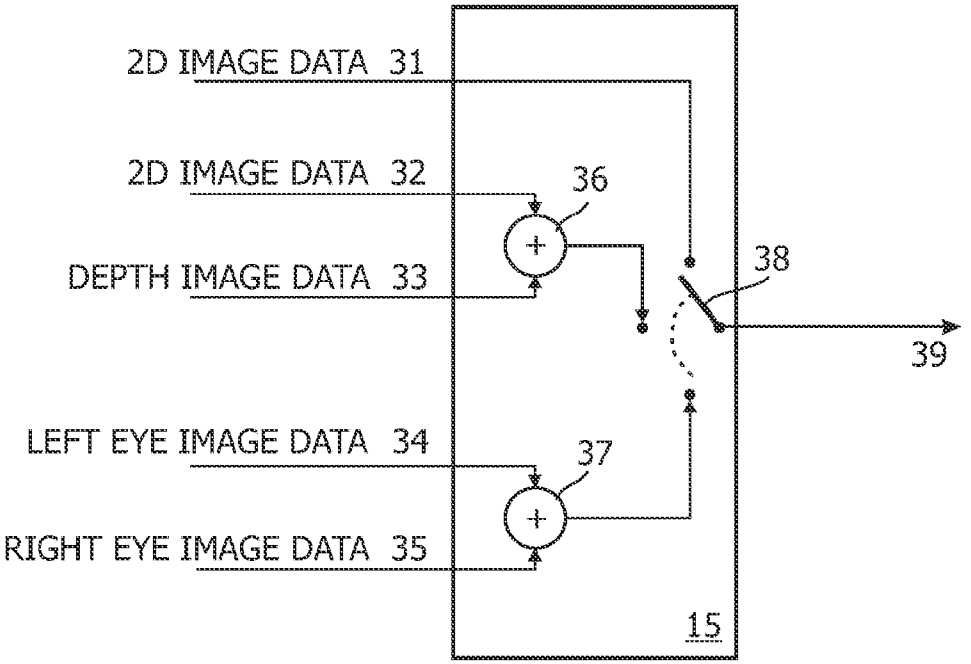
2D IMAGE DATA 31
2D IMAGE DATA 32
DEPTH IMAGE DATA 33
LEFT EYE IMAGE DATA 34
RIGHT EYE IMAGE DATA 35
36
37
38
39
15

FIG. 2

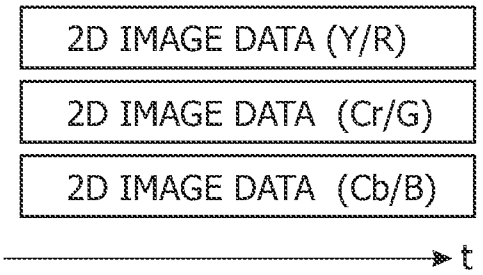

FIG. 3

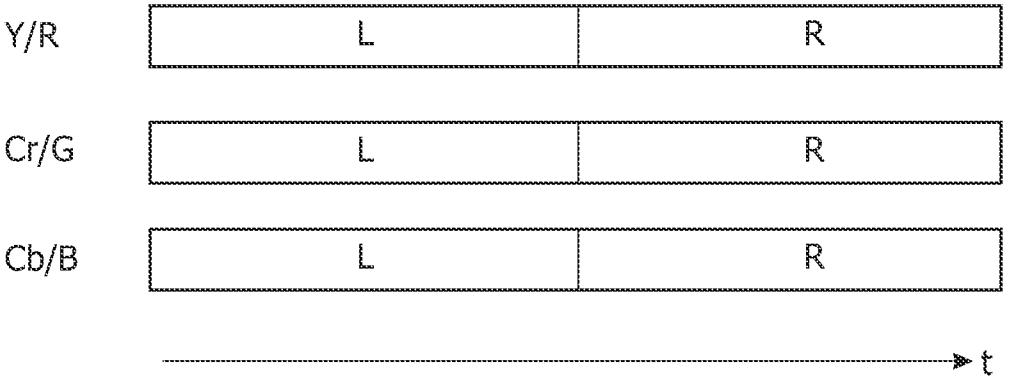

FIG. 4

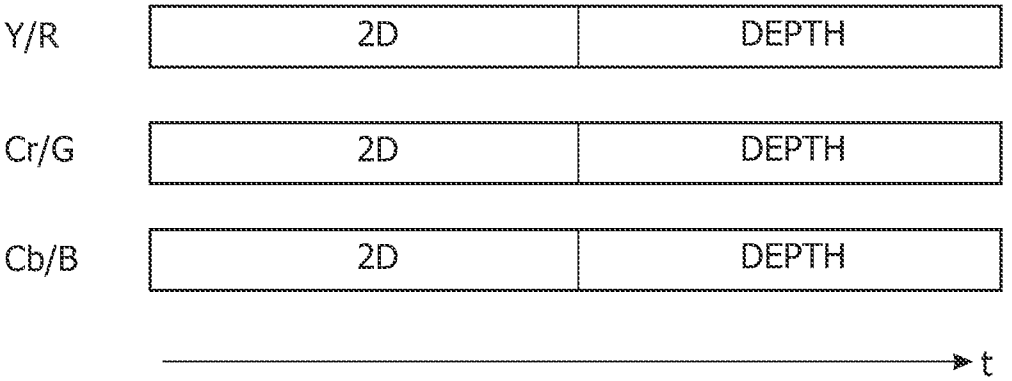

FIG. 5

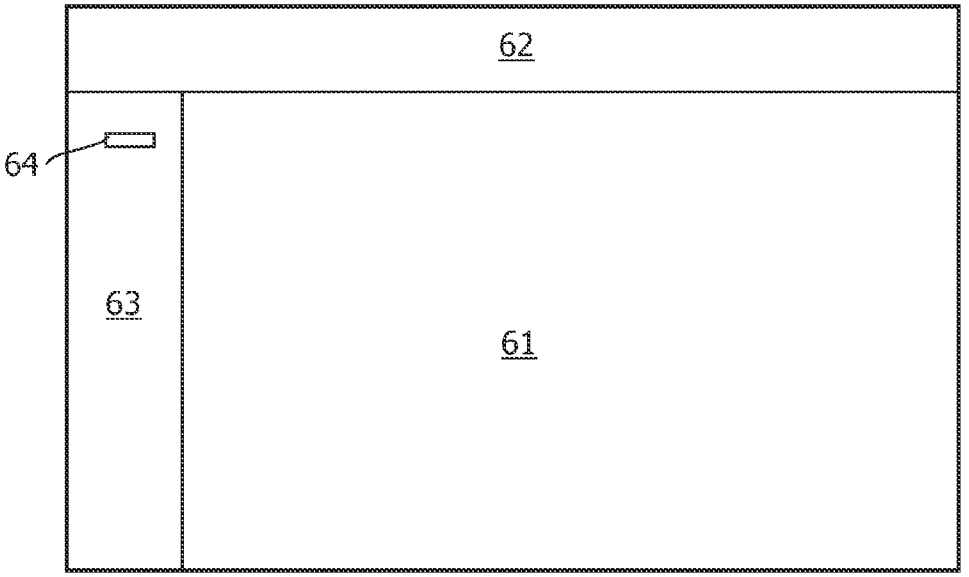
62
64
63
61

FIG. 6

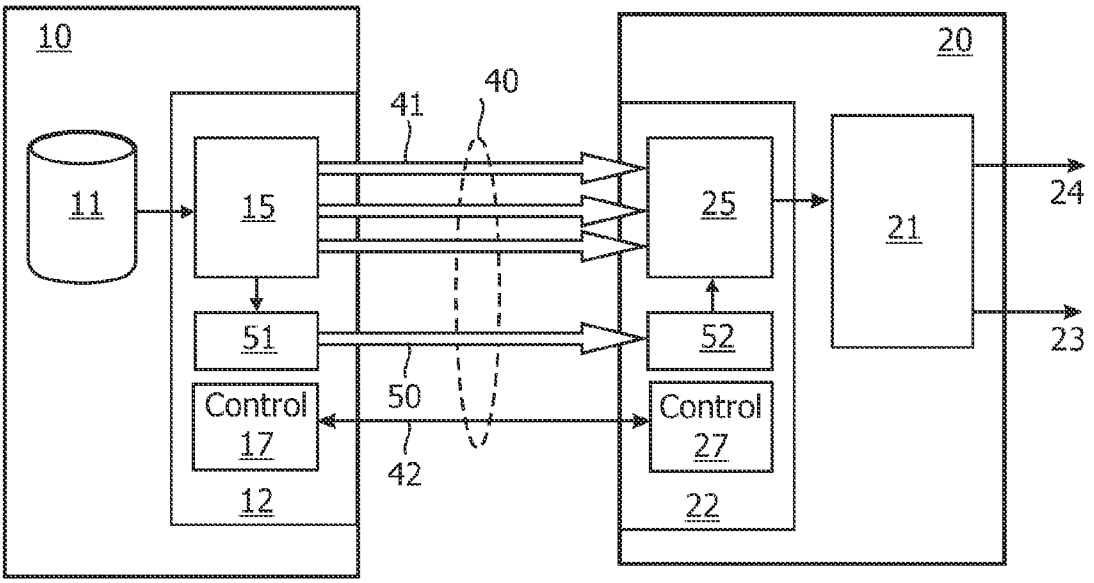
10
20
40
41
11
15
25
21
24
23
51
52
Control
17
50
Control
27
42
12
22

FIG. 7

TRANSPORT OF STEREOSCOPIC IMAGE DATA OVER A DISPLAY INTERFACE

FIELD OF THE INVENTION

This invention relates to transport of image data for the display of stereoscopic images.

BACKGROUND TO THE INVENTION

Various schemes for displaying three dimensional images (static, or moving images) are known. One well-known scheme simultaneously displays two images which are encoded for the left eye and right eye by means of different optical polarizations, or colors (e.g. red and green). A viewer wears a pair of special glasses which have lenses in front of the left and right eyes. The lenses are arranged to pass only the image intended for that eye, i.e. a left eye sees only the image intended for that eye. Another stereoscopic display technique sequentially presents an image intended for the left eye, and an image intended for the right eye. A user wears a special pair of glasses which are shuttered in synchronism with the displayed images, such that the left eye shutter is open during the period when the left eye image is displayed, and the right eye shutter is open during the period when the right eye image is displayed.

Auto stereoscopic display techniques remove the need for a viewer to wear special glasses. One known scheme uses a flat panel display with multisided slanted ventricular lenses mounted in front of display elements. An example of this kind of display is described in WO07/069,195 A2.

Historically, 3D displays have been limited to specialized applications (e.g. medical imaging) or feature film presentation where it is possible to provide bespoke, high cost, display apparatus. There is now considerable interest in delivering stereoscopic content to a much wider audience, including the consumer electronics market. However, an issue with delivering stereoscopic images in a consumer electronics environment is that conventional displays, and display interfaces which connect displays or projectors to media players, have been designed specifically for the display of conventional 2D images.

Schemes for conveying stereoscopic image data within the confines of existing display interfaces have tended to sacrifice part of the active portion of an image to carry additional data necessary to render a stereoscopic image. The WOWvx format developed by Koninklijke Philips Electronics N.V. divides the overall display frame into a number of separate regions where different data can be carried. The overall frame is divided into two sub-frames, arranged side-by-side: a first of the sub-frames carries 2D image data and a second of the sub-frames carries depth information. A header is added to the beginning of the upper left-hand corner of the frame. The image data is carried in a normal manner across a display interface. A display extracts depth data from the second sub-frame and creates a 3D image having a resolution of the first sub-frame. This 3D image can then be 'stretched' to occupy the full visible area of the display.

Digital displays and media players are increasingly being equipped with digital display interfaces such as the High Definition Multimedia Interface (HDMI). The present invention seeks to provide an alternative way of delivering stereoscopic image data over a digital display interface.

SUMMARY OF THE INVENTION

A first aspect of the present invention provides a digital display interface part for use in a first audio-visual device for

supporting a digital display interface between the first audio-visual device and a second audio-visual device, the interface part comprising:

an input for receiving image data;

a formatter arranged to format the data for transport over the interface, wherein the formatter is operable in:

a first mode in which the formatter generates a stream of first data elements which carry pixel data of a 2D image;

a second mode in which the formatter generates a stream of second data elements which carry a multiplexed combination of components of a stereoscopic image.

An advantage of this arrangement is that the stereoscopic image data can be carried across a digital display interface using the existing capacity of the interface. Advantageously, where the display interface supports various color depths of image data, such as 48-bit color as well as conventional 24-bit color, the higher capacity transport modes which are intended to transport higher color depth data can be re-used to carry the multiplexed stereoscopic image data. Therefore, no additional capacity is required from the interface to carry the stereoscopic data, while still allowing good color depth for the stereoscopic content. It also has the benefit that little or no changes are required to an existing standard defining the display interface. It also allows stereoscopic image content to be sent with a resolution which is significantly higher than schemes which sacrifice part of the active image area to carry the stereo image data.

Advantageously, the second data elements have a capacity which is no greater than, and preferably the same as, the first data elements. This allows the stereoscopic data to be carried with minimal modification to the standards defining the interface.

The term "stereoscopic image data components" is intended to include any scheme which sends data to construct a stereoscopic (or autostereoscopic) display to a user, and includes: schemes which send left eye image data and right eye image data; schemes which send 2D image data and image depth data; schemes which send 2D image data and image depth data and occlusion information, indicating which objects in the picture are occluded by other objects.

In the case of a stereoscopic image which uses left eye and right eye image data, the formatter can use a portion of the second data element to carry the left eye image data and another portion of the second data element to carry the right eye image data.

In the case of a stereoscopic image which uses 2D+depth data, the formatter can use a portion of the second data element to carry the 2D image data and another portion of the second data element to carry the image depth data. The depth data may additionally be carried in other parts of a signal, such as periods within horizontal or vertical blanking periods. In HDMI, Data Island Packets are carried within these periods, and certain Data Island Packets can be identified as carrying depth data.

Advantageously, signaling information is sent across the interface identifying which mode the formatter is using and further signaling information can allow the second audio-visual device (e.g. a display or projector) to indicate whether it has the capability to render stereoscopic data sent in that formatting mode.

In a High Definition Multimedia Interface (HDMI), signaling can be carried by packets carried within the Data Islands between image data. The capability of a sink device to handle stereoscopic data can be signaled between interface parts using the HDMI Display Data Channel (DDC) channel, with capability data being stored in an Extended Display Identification Data (EDID) ROM at a sink.

A related aspect of the present invention provides a digital display interface part for use in an audio-visual device for supporting a digital display interface between the audio-visual device and another audio-visual device, the interface part comprising:

an input for receiving formatted image data from the interface;

a processor arranged to extract image data, the processor being operable in:

a first mode in which the processor extracts pixel image data for a 2D image from a stream of first data elements; and,

a second mode in which the processor demultiplexes components of a stereoscopic image from a stream of second data elements which carry a multiplexed combination of components of a stereoscopic image.

A related aspect of the present invention provides a method of formatting image data at a digital display interface part of a first audio-visual device for transport over a digital display interface between the first audio-visual device and a second audio-visual device, the method comprising:

receiving image data;

formatting the image data for transport over the interface by:

in a first mode, generating a stream of first data elements which carry pixel data of a 2D image; and,

in a second mode, generating a stream of second data elements which carry a multiplexed combination of components of a stereoscopic image.

A related aspect of the present invention provides a method of processing image data at a digital display interface part of an audio-visual device, the method comprising:

receiving formatted image data from the interface;

extracting image data by:

in a first mode, extracting pixel image data for a 2D image from a stream of first data elements; and,

in a second mode, demultiplexing components of a stereoscopic image from a stream of second data elements which carry a multiplexed combination of components of a stereoscopic image.

A further aspect of the invention provides a digital display interface part for use in a first audio-visual device for supporting a digital display interface between the first audio-visual device and a second audio-visual device, the interface part comprising:

an input for receiving stereoscopic image data;

a formatter arranged to format the data for transport over the interface, wherein the formatter is operable to send a portion of the stereoscopic image data over a primary image data transport channel of the interface and another portion of the stereoscopic image data over an auxiliary data channel.

The interface part can send signaling information across the interface identifying how stereoscopic data is distributed between the primary data channel and the auxiliary data channel.

Advantageously, the stereoscopic image data comprises 2D image data and image depth data and the formatter is arranged to send depth data across the auxiliary data channel.

The auxiliary data channel can comprise a separate line, or lines, within the same cable as the primary channel; a second cable which is separate from a first cable carrying the primary channel; or a wireless link.

A related aspect of the present invention provides a digital display interface part for use in an audio-visual device for supporting a digital display interface between the audio-visual device and another audio-visual device, the interface part comprising:

an input for connecting to a primary image data transport channel of the interface and an auxiliary data channel;

a processor arranged to extract a portion of the stereoscopic image data from the primary image data transport channel of the interface and another portion of the stereoscopic image data from the auxiliary data channel.

A related aspect of the present invention provides a method of sending stereoscopic image data over a digital display interface between a first audio-visual device and a second audio-visual device, comprising, at the first audio-visual device:

receiving stereoscopic image data for transport over the interface;

sending a portion of the stereoscopic image data over a primary image data transport channel of the interface and another portion of the stereoscopic image data over an auxiliary data channel.

A related aspect of the present invention provides a method of processing stereoscopic image data at an audio-visual device for supporting a digital display interface between the audio-visual device and another audio-visual device, the method comprising:

extracting a portion of the stereoscopic image data from a primary image data transport channel of the interface and another portion of the stereoscopic image data from an auxiliary data channel.

A further aspect of the invention provides a digital display interface part for use in a first audio-visual device for supporting a digital display interface between the first audio-visual device and a second audio-visual device, the interface part comprising:

an input for receiving stereoscopic image data;

a formatter arranged to generate a stream of image data carrying data elements and auxiliary data carrying data elements at intervals in the stream, and wherein signaling information for use in decoding the stereoscopic image data is carried in at least one of the auxiliary data elements.

Where the stereoscopic image data comprises left eye image data and right eye image data, the signaling information can specify what data elements carry the left eye image data and what data elements carry the right eye image data. Where the left eye images and right eye images are interleaved on a line-by-line basis, the signaling information can be sent as often as once for each pair of interleaved lines, although it can be sent much less frequently, such as once per field or frame.

Where the stereoscopic image data comprises 2D image data and depth information, the signaling information can specify at least one of: the transmission location, quantity of the depth information.

Advantageously, where the stereoscopic image data has a plurality of different possible formats, the signaling information specifies the format. One of the formats for the stereoscopic image data can be a scheme which encodes the stereoscopic image data within a conventional 2D image format.

Advantageously, the signaling information is carried in a horizontal or vertical blanking period and for a High Definition Multimedia Interface (HDMI) the signaling information can be sent in a Data Island Packet.

A related aspect of the present invention provides a digital display interface part for use in an audio-visual device for supporting a digital display interface between the audio-

visual device and another audio-visual device, the interface part comprising:

an input for receiving, from the interface, a stream of image data carrying data elements and auxiliary data carrying data elements at intervals in the stream;

using signaling information carried in at least one of the auxiliary data elements to decode the stereoscopic image data.

A related aspect of the present invention provides a method of sending stereoscopic image data over a digital display interface between a first audio-visual device and a second audio-visual device comprising, at the first audio-visual device:

receiving stereoscopic image data;

generating a stream of image data carrying data elements and auxiliary data carrying data elements at intervals in the stream, and wherein signaling information for use in decoding the stereoscopic image data is carried in at least one of the auxiliary data elements.

A related aspect of the present invention provides a method of processing stereoscopic image data at a digital display interface part of an audio-visual device, the method comprising:

receiving, from the interface, a stream of image data carrying data elements and auxiliary data carrying data elements at intervals in the stream;

using signaling information carried in at least one of the auxiliary data elements to decode the stereoscopic image data.

A further aspect of the invention provides a digital display interface part for use in a first audio-visual device for supporting a digital display interface between the first audio-visual device and a second audio-visual device, the interface part comprising:

an input for receiving stereoscopic image data components;

a formatter arranged to generate a stream of image data carrying data elements and auxiliary data carrying data elements at intervals in the stream, and wherein the stereoscopic image data is distributed between the image data carrying data elements and the auxiliary data carrying data elements.

Advantageously, the stereoscopic image data components are 2D image data and image depth data and wherein the depth data is carried in the auxiliary data carrying data elements. Advantageously, the stream further comprises signaling information, carried within auxiliary data carrying data elements, specifying which part of an image the depth information relates to.

The auxiliary data carrying data elements are sent in a horizontal or vertical blanking period, such as HDMI Data Island Packets.

A related aspect of the present invention provides a digital display interface part for use in an audio-visual device for supporting a digital display interface between the audio-visual device and another audio-visual device, the interface part comprising:

an input for receiving, from the interface, a stream of image data carrying data elements and auxiliary data carrying data elements;

a processor arranged to extract stereoscopic image data from the image data carrying data elements and at least part of the stereoscopic image data from the auxiliary data carrying data elements.

A related aspect of the present invention provides a method of sending stereoscopic data across a digital display interface between a first audio-visual device and a second audio-visual device, the method comprising, at the first audio-visual device:

receiving stereoscopic image data components;

generating a stream of image data carrying data elements and auxiliary data carrying data elements at intervals in the stream, and distributing the stereoscopic image data between the image data carrying data elements and the auxiliary data carrying data elements.

A related aspect of the present invention provides a method of processing stereoscopic image data at a digital display interface part of an audio-visual device, the method comprising:

receiving, from the interface, a stream of image data carrying data elements and auxiliary data carrying data elements;

extracting stereoscopic image data from the image data carrying data elements and at least part of the stereoscopic image data from the auxiliary data carrying data elements.

The functionality described here can be implemented in software, hardware or a combination of these. The invention can be implemented by means of hardware comprising several distinct elements, and by means of a suitably programmed computer. Accordingly, further aspects of the invention provide software for implementing any of the methods. The software may be stored on an electronic memory device, hard disk, optical disk or other machine-readable storage medium. The software may be delivered as a computer program product on a machine-readable carrier or it may be downloaded to the AV device via a network connection.

The invention also extends to signals, for transmission over the display interface, which result from any of the methods.

Features of the various aspects of the invention can be combined.

BRIEF DESCRIPTION OF THE DRAWINGS

Embodiments of the invention will be described, by way of example only, with reference to the accompanying drawings in which:

FIG. **1** shows a display interface for carrying image data between two AV devise;

FIG. **2** shows a formatting function at one end of the interface;

FIG. **3** shows a conventional way of sending 2D image data across a display interface;

FIGS. **4** and **5** show ways of sending stereoscopic image data across a display interface;

FIG. **6** shows format of an HDMI video frame; and,

FIG. **7** shows a display interface which includes an auxiliary data channel.

DESCRIPTION OF PREFERRED EMBODIMENTS

FIG. **1** shows an example scenario in which the invention can be used. In FIG. **1**, an AV device **10** which is capable of providing a source of digital AV content is connected to a display (or video projector) **20** via a digital display interface (DDI) **40**. Interface parts **12**, **22** in devices **10**, **20** support the interface **40**, and provide functions such as formatting signals into the form required by standards defining the interface **40**. The source device **10** can be a device which can retrieve digital AV content from a store **11**, such as a hard disk, a solid state memory or an optical disc or any other fixed or removable storage medium or device. Examples of device **10**

include a personal video recorder (PVR), an optical disc player such as a DVD player, an HD-DVD player or a Blu-ray player. Alternatively, device **10** can take the form of a set-top box which receives content from a distribution channel (such as a broadcast channel or broadband network or other type of network (e.g. home network)).

There are a variety of methods for displaying stereoscopic (3D) images. The two main methods for transferring 3D image data across an interface are: to transmit two complete, separate, stereoscopic images representing the left and right views as seen by human eyes; and a normal 2D image with associated depth information that can be used to generate the stereoscopic images within the display. The first method generally requires a significantly higher bandwidth (up to twice that needed for a 2D image) over the interface, but needs little processing in the display, while the second method can require a smaller increase in bandwidth, but at the expense of some fast real-time processing in the display to process the depth information.

Current digital display interfaces, such as HDMI, offer a very high bandwidth. These interfaces transfer uncompressed pixel information, unlike other transport mechanisms (such as Ethernet, USB, IEEE1394) which have to transfer compressed images because of their bandwidth limitations. Originally, images transferred by HDMI were limited to 8 bits per color per pixel, so-called "24-bit color". Improvements to HDMI from version 1.3 have allowed HDMI to carry more bits per pixel, with the options of carrying 10, 12 and 16 bits per color per pixel, i.e. up to 48-bit color. HDMI describes Deep Color Pixel Packing modes (HDMI 1.3a, section 6.5.3) which allow the higher color depths just described.

According to one embodiment of the present invention, the deep color modes are used to transport stereoscopic image data. The stereoscopic image data can be left image data+right image data or 2D+depth information. FIG. **2** shows a formatting function **15** used within an interface part **12**. The formatter **15** can selectively operate in one of a number of different modes. This is shown schematically by formatter selecting one of the sets of inputs: 2D image data **31**; 2D+depth image data **32**, **33**; or left eye and right eye image data **34**, **35** for processing and selectively connecting **38** to an interface output **39**. Formatter **15** can receive conventional 2D image data **31**, such as 24-bit color image data **31**. Typically this is received in an RGB or component video (Y,Cr,Cb) format. When receiving stereoscopic image data, formatter **15** multiplexes **36**, **37** the image data components. For left eye/right eye image data, the left eye data and right eye data will typically be taken from the same pixel in the left eye/right eye frames or fields of the images, although other algorithms for combining pixels are also within the scope of the present invention. For 2D image+depth information, the 2D image data will typically correspond to a single pixel (e.g. RGB or component video format) and the depth information can take a different form, and may correspond to a different region of the image to the pixel of the 2D image. The formatter **15** may only support one of the 3D formats (i.e. just L+R, or just 2D+depth) or both types of 3D format.

FIGS. **3** to **5** show a range of different ways in which the image data can be multiplexed. FIG. **3** shows conventional image data. In HDMI, the three color components (R,G,B or Y,Cr,Cb) are sent simultaneously on three Transition Minimised Differential Signaling (TMDS) channels **41**. TMDS refers to line-level coding applied to the data to maintain an approximate DC balance as well as a reduction in the number of transitions in the data stream. Each color component can be sent using a standard color depth (e.g. 8 bits per color per pixel) or an enhanced color depth, such as 16 bits per color per pixel. FIG. **4** shows a way in which stereoscopic left eye/right eye data can be multiplexed. The components of the left eye data (R,G,B or Y,Cr,Cb) are sent in a first portion of each data-carrying element, and then immediately followed by the components of the right eye data (R,G,B or Y,Cr,Cb). Both left eye and right eye are either sent within the same packet, consecutive image data packets, or parts of consecutive image data packets. As an example, where a 16-bit per color per pixel mode is used, bits **0**-**7** can carry the left image Y data and bits **8**-**15** carry the right image Y data. HDMI 1.3a currently allows a color depth of up to 16-bits per color per pixel (48-bit color). FIG. **4** shows how two 24-bit color images can be carried within the existing 48-bit color mode with no additional capacity required from the interface. It will be appreciated that future revisions of HDMI (and other) specifications may extend the bandwidth to permit a larger color depth, which will allow each of the left eye and right eye images to use more bits per pixel, so allowing richer 3D images.

FIG. **5** shows a scheme for sending 2D image data+depth information where the 2D data is sent first, followed by the depth data. Each color component (R,G,B or Y,Cr,Cb) follows the same format. In FIG. **6** the capacity of the packet is divided equally between the 2D data and depth information, although any other division is possible. It may be possible to send significantly less depth data than 2D data, which can allow the 2D image to use a wide color palette and/or high resolution. It is also possible to send some—or all—of the depth information in a different part of the transmitted data stream, such as within specific HDMI Data Island Packets carried within the horizontal and vertical line blanking intervals. This is particularly useful for depth data that is not attached directly to a specific pixel, for instance, it applies to a region of the image.

Interface part **12** sends signaling **42** which indicates the format of the image data, e.g. indicating whether the image data is 2D, stereo (L+R) or stereo (2D+depth). The signaling can also indicate further details of the multiplexing scheme, such as which color depth mode is being used to carry the multiplexed data, the number of bits per data element that are allocated to 2D data and the number of bits per data element that are allocated to depth data. This signaling allows flexibility in how the stereo data is allocated to data carrying elements sent across the interface **40** and allows for the amount of Depth information to be changed dynamically, according to the requirements of the content which is to be displayed. In HDMI, Data Island Packets are sent in horizontal and vertical line blanking periods. The signaling information can conveniently be carried within a Data Island Packet. FIG. **6** shows the layout of an HDMI video frame, showing a region **61** where pixel data is sent across TMDS channels, a horizontal blanking period **63** and a vertical blanking period. Data Island Packets **64** are sent within Data Island periods positioned within the horizontal and vertical blanking periods **62**, **63**. The signaling data can be carried in a General Control Packet, an Auxiliary Video InfoFrame (AVI) packet or an InfoFrame Packet specifically designated for this purpose. If depth data is carried both within the pixel data carrying data elements and other places of the stream, the signaling can indicate where the depth data is to be found. The amount of depth data and the location(s) of the depth data can vary on a dynamic basis during an image, or sequence of images, depending on the required color depth, resolution or complexity of the image (e.g. the amount of depth information within an image).

AV device **20** includes a processor **21** applies suitable processing to the data to render a 3D image. In the case of stereoscopic display, where a user is simultaneously or

sequentially presented with separate left and right eye images, processor **21** constructs the separate left eye/right eye images and outputs them **24** at the required time. For sequential stereoscopic displays, a further output **23** is provided to synchronize operation of shuttered glasses. In the case of an autostereoscopic display, such as a display using a ventricular screen, processor **21** constructs the image data which is required to be output **24** to the display elements to generate the autostereoscopic display. Interface part **22** and processor **21** use the signaling information sent across the interface to:

determine if stereoscopic image data is being sent; determine what general stereoscopic image format is being used (e.g. left+right image; 2D+depth; stereo encoded within active image data);

determine more detail of how the image data is being encoded on the interface, and therefore what decoding scheme should be used at the receiver. This may include information about which deep color mode is being used, bit allocation between 2D and depth data, transmission location of depth data (e.g. specific Data Island Packets or auxiliary channel locations).

Further signaling between the AV devices **10**, **20** allows the sink device **20** to indicate it's capabilities to receive and process image data. The capability information may indicate the maximum allowed bandwidth for each mode of sending 2D and stereo image data. In HDMI, the capability of a sink device can use the Display Data Channel (DDC) channel, with capability data being stored in an Extended Display Identification Data (EDID) ROM at a sink.

The interface may support other schemes for sending stereoscopic data. A first alternative is to send two separate complete images, carried sequentially (such as a complete left image followed by a complete right image). The indication of the left and right image can be indicated by signaling information carried directly adjacent the position of the image data, such as an HDMI Data Island Packet.

A second alternative is to send two separate images, but with the lines of the two images interleaved. For example, the first line of the left image is sent first, followed by the first line of the right image, and so on.

A third alternative is to send a 2D image in a conventional manner, and to carry depth information in specific Data Island Packets dedicated to carrying depth information.

In each of these alternatives, signaling information carried directly adjacent the position of the image data, such as an HDMI Data Island Packet, can indicate what the image data corresponds to. For the third alternative, the signaling information can specify which part of the image the depth data relates to. As noted above, the HDMI Data Island Packets can be a General Control Packet, an Auxiliary Video InfoFrame (AVI) packet or an InfoFrame Packet specifically designated for this purpose. The information in these packets can identify:

the current stereoscopic method (field, line or byte) being used (see above);

whether a Deep Color Pixel Packing mode is being used to carry 3D information or a Deep Color Mode 2D image;

the mapping of left and right images to the current field, line or byte;

how many of the Data Island Packet packets/sub-packets are being uses to carry Depth information;

the location of other stereoscopic image data components.

The embodiments above show how the separate stereoscopic image components can be carried over a display interface. For some applications, especially those intended for display on a ventricular screen, the picture received at the interface part **12** may already be encoded with stereoscopic content. As an example, a WOWvx encoded image as described in the background section, comprises a 2D image, depth information and/or occlusion information already embedded into separate regions of a conventional image. In one embodiment, the 2D image is carried in one quarter of the image pixels (e.g. in half a line for half the total lines in the picture). The associated depth and/or occlusion information is carried in the other three-quarters of the presented picture. In this case, the lines of the picture are transported across the HDMI link as thought they were a single 2D image occupying all of each line, for all the available lines. In order to identify such a 3D image, an HDMI Data Island Packet (typically a General Control Packet, Auxiliary Video InfoFrame (AVI) packet or specifically designated InfoFrame Packet) indicates this method. The information in this Packet identifies:

the current stereoscopic method (e.g. 2D+Depth) being used;

any information pertaining to this method which is required by the display.

The sink identifies the transmitted picture as using this method and processes the picture accordingly. The sink also carries information in the EDID indicating that it supports this method.

In the above description, stereoscopic image data is carried over a channel of an interface (e.g. an HDMI Transport Stream) either by multiplexing the stereoscopic image data within normal data carrying elements of the channels, or by carrying at least part of the stereoscopic image data within other packets (e.g. Data Island Packets) carried over the same channel. A further embodiment of the invention carries at least some of the stereoscopic image data over an associated high speed auxiliary data link such as Gigabit Ethernet, IEEE 1394 or a high-speed wireless link. Signaling information identifies which information is carried by the primary channels of the interface and which is carried by the associated auxiliary link. In HDMI, the signaling information can be carried in Data Island Packets. Similar, or complementary, identification information may also be carried on the associated high speed auxiliary link. The sink uses the received Data Island Packets to identify which information is carried on which link and combines the two streams of data in the necessary format for presentation or processing. Depending on the characteristics of the HDMI and associated auxiliary link, it may be necessary to buffer the data contained in the two streams in order to maintain synchronicity between them. In one embodiment using the above embodiment, the associated wires for the auxiliary link are carried within the HDMI cable; this option is shown in FIG. **7** by additional line **50** connecting modules **51**, **52** in interface parts **12**, **22**. In other embodiments, the associated auxiliary link is carried in a separate cable connecting the devices **10**, **20**, or by a high-speed wireless link.

Other variations to the disclosed embodiments can be understood and effected by those skilled in the art in practicing the claimed invention, from a study of the drawings, the disclosure, and the appended claims. In the claims, the word "comprising" does not exclude other elements or steps, and the indefinite article "a" or "an" does not exclude a plurality. A single processor or other unit may fulfill the functions of several items recited in the claims. The mere fact that certain measures are recited in mutually different dependent claims does not indicate that a combination of these measured cannot be used to advantage. Any reference signs in the claims should not be construed as limiting the scope.

The invention claimed is:

1. A digital display interface part, for use in a first audio-visual device, for supporting a digital display interface between the first audio-visual device and a second audio-visual device, the digital display interface having a known data carrying capacity for transmitting uncompressed pixel information, the interface part comprising:

an input for receiving image data;

a formatter arranged to format the data for transport over the interface, wherein the formatter, in accordance with signal information received from the second audio-device, is operable in:

a first mode to generate a stream of first data elements, said first data element comprising pixel data of a 2D image, at a data carrying capacity no greater than said known data carrying capacity; and,

a second mode to generate a stream of second data elements which carry a multiplexed combination of components of a stereoscopic image, wherein said components of said stereoscopic image elements being transmitted in a first portion of said interface and in a second portion of said interface, each of said first portion and said second portion having a lesser data carrying capacity than said known data carrying capacity and a combined data carrying capacity no greater than said known data carrying capacity, wherein the interface part is arranged to send signaling information across the interface, the signaling information identifying which mode the formatter is using and characteristics of said steam of second data elements.

2. The interface part according to claim **1**, wherein the signaling information comprises information for enabling the second audio-visual device to determine a stereoscopic image format being used in the second mode.

3. The interface part according to claim **2**, wherein the signaling information is carried in one of: a horizontal and a vertical blanking period.

4. The interface part according to claim **1**, wherein the interface is a High Definition Multimedia Interface (HDMI) and the signaling information is sent in a Data Island Packet between image data.

5. The interface part according to claim **4**, said signaling information received across the interface specifies capabilities of the second audio-visual device.

6. The interface part according to claim **1**, wherein the stereoscopic image data components are left eye image data and right eye image data.

7. The interface part according to claim **6**, arranged for sending the left eye image data and the right eye image data sequentially.

8. The interface part according to claim **7**, wherein an indication of the left and right image data being indicated by signaling information carried directly adjacent a position of the image data.

9. The interface part according to claim **6**, arranged for sending the left eye image data and the right eye image data by line interleaving.

10. The interface part according to claim **1**, wherein the stereoscopic image data components are 2D image data and image depth data.

11. The interface part according to claim **10**, wherein the formatter is arranged to use a portion of the second data element to carry the 2D image data and another portion of the second data element to carry the image depth data.

12. A digital display interface part for use in an audio-visual device, said interface part supporting a digital display interface having a known data carrying capacity between the audio-visual device and a second audio-visual device, and receiving uncompressed pixel information, the interface part comprising:

an input for receiving formatted image data from the interface;

a processor arranged to extract said image data, the processor being operable, in accordance with capabilities of said second audio-visual device, wherein

in a first mode, the processor extracts pixel image data for a 2D image from a stream of first data elements at a data carrying capacity no greater than said known data carrying capability; and,

in a second mode, the processor demultiplexes components of a stereoscopic image from a stream of second data elements which carry a multiplexed combination of components of a stereoscopic image, wherein said components of said stereoscopic image data elements being transmitted in a first portion of said interface and in a second portion of said interface, each of said first portion and said second portion having a lesser data carrying capacity than said known data carrying capacity and a combined data carrying capacity no greater than said known data carrying capacity, the interface part further arranged to receive signaling information across the interface, the signaling information identifying which of said first mode and said second mode is used and characteristics of said steam of second data elements.

13. The interface part according to claim **12**, wherein the signaling information comprises:

information for enabling the audio-visual device to determine a stereoscopic image format being used, and

the interface part arranged to determine said stereoscopic image format being used.

14. The interface part according to claim **12**, wherein the interface is a High Definition Multimedia Interface (HDMI) and the signaling information is received in a Data Island Packet between image data.

15. The interface part according to claim **12**, wherein the stereoscopic image data components are left eye image data and right eye image data.

16. A method of formatting image data at a digital display interface part of a first audio-visual device for transport over a digital display interface between the first audio-visual device and a second audio-visual device, the digital display interface having a known data carrying capacity for transmitting uncompressed pixel information, the method causing a processor in the digital interface part to execute the steps comprising:

receiving image data;

formatting the image data for transport over the interface, in accordance with capabilities of the second audio-visual device received in a signaling information, said formatting comprising:

generating, in a first mode, a stream of first data elements said first data elements comprising pixel data of a 2D image, at a data carrying capacity no greater than said known data carrying capacity; and,

generating, in a second mode, a stream of second data elements said second data elements comprising a multiplexed combination of components of a stereoscopic image, said components of said stereoscopic image data elements being transmitted in a first portion of said interface and in a second portion of said interface, each of said first portion and said second portion having a lesser data carrying capacity than said known data carrying capacity and a combined data carrying capacity no greater than said known data carrying capacity, wherein characteristics of said

steam of second data elements is presented in a second signaling information.

17. The method according to claim **16**, wherein the second signaling information comprises information for enabling the second audio-visual device to determine a stereoscopic image format being used.

18. A method of processing image data at a digital display interface part of an audio-visual device, said interface part supporting a digital display interface having a known data carrying capacity for carrying uncompressed pixel information, the method causing a processor in the digital display interface part to execute the steps comprising:

receiving signaling information and formatted image data from the interface;

extracting image data in accordance with capabilities of said audiovisual device, by:

extracting pixel image data for a 2D image from a stream of first data elements at a data carrying capacity no greater than said known data carrying capability in a first mode; and,

demultiplexing components of a stereoscopic image from a stream of second data elements which carry a multiplexed combination of components of a stereoscopic image in a second mode, said components of said stereoscopic image data elements being transmitted in a first portion of said interface and in a second portion of said interface, each of said first portion and said second portion having a lesser data carrying capacity than said known data carrying capacity and a combined data carrying capacity no greater than said known data carrying capacity, wherein characteristics of said steam of second data elements are presented in said signaling information.

* * * * *

EXHIBIT 3

US009843786B2

(12) **United States Patent**
Shepherd

(10) **Patent No.: US 9,843,786 B2**
(45) **Date of Patent: *Dec. 12, 2017**

(54) **TRANSPORT OF STEREOSCOPIC IMAGE DATA OVER A DISPLAY INTERFACE**

(71) Applicant: **KONINKLIJKE PHILIPS N.V.**, Eindhoven (NL)

(72) Inventor: **Nicoll Burleigh Shepherd**, Coulsdon (GB)

(73) Assignee: **KONINKLIJKE PHILIPS N.V.**, Eindhoven (NL)

(*) Notice: Subject to any disclaimer, the term of this patent is extended or adjusted under 35 U.S.C. 154(b) by 0 days.

This patent is subject to a terminal disclaimer.

(21) Appl. No.: **15/256,839**

(22) Filed: **Sep. 6, 2016**

(65) **Prior Publication Data**

US 2016/0373720 A1 Dec. 22, 2016

Related U.S. Application Data

(63) Continuation of application No. 14/629,642, filed on Feb. 24, 2015, now Pat. No. 9,462,258, which is a (Continued)

(30) **Foreign Application Priority Data**

Dec. 18, 2007 (EP) 07123461

(51) **Int. Cl.**
H04N 5/60 (2006.01)
H04N 13/00 (2006.01)
(Continued)

(52) **U.S. Cl.**
CPC ***H04N 13/0059*** (2013.01); ***H04N 5/067*** (2013.01); ***H04N 5/60*** (2013.01);
(Continued)

(58) **Field of Classification Search**
CPC H04N 13/0402; H04N 5/60; H04N 5/067
(Continued)

(56) **References Cited**

U.S. PATENT DOCUMENTS

6,914,637 B1 * 7/2005 Wolf et al. 348/473
2002/0009137 A1 1/2002 Nelson et al.
(Continued)

FOREIGN PATENT DOCUMENTS

JP H0530538 A 2/1993
JP 2003111101 A 4/2003
(Continued)

Primary Examiner — Nam Pham

(57) **ABSTRACT**

A digital display interface (**40**) connects a first audio-visual device (**10**) to a second audio-visual device (**20**). Stereoscopic image data is transmitter over the display interface (**40**). Components of stereoscopic image data are multiplexed and inserted into an image data carrying element. An existing deep color mode can be re-used for this purpose. Signaling information to help identify or decode the stereoscopic image data is carried in auxiliary data carrying elements. Stereoscopic image data can be distributed between image data carrying data elements and auxiliary data carrying data elements. Auxiliary data carrying elements can be transmitted in horizontal or vertical blanking periods, and can comprise HDMI Data Island Packets. Stereoscopic image data can be sent over an auxiliary data channel. The auxiliary data channel can form part of the same cable as is used to carry a primary channel of the display interface, a separate cable, or a wireless link.

22 Claims, 3 Drawing Sheets

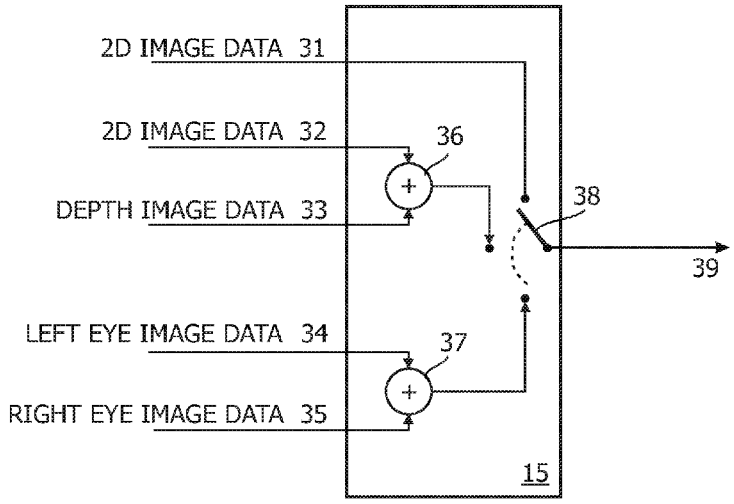

Related U.S. Application Data

continuation of application No. 12/808,685, filed as application No. PCT/IB2008/055305 on Dec. 15, 2008, now Pat. No. 9,036,010.

(51) **Int. Cl.**

H04N 5/067	(2006.01)
H04N 13/04	(2006.01)
H04N 21/4363	(2011.01)
H04N 21/81	(2011.01)

(52) **U.S. Cl.**

CPC ***H04N 13/0048*** (2013.01); ***H04N 13/0402*** (2013.01); ***H04N 21/43635*** (2013.01); ***H04N 21/43637*** (2013.01); ***H04N 21/816*** (2013.01); *H04N 2213/003* (2013.01)

(58) **Field of Classification Search**

USPC 348/46

See application file for complete search history.

(56) **References Cited**

U.S. PATENT DOCUMENTS

2005/0146521	A1	7/2005	Kaye et al.	
2006/0044388	A1*	3/2006	Kim et al.	348/42
2006/0192776	A1*	8/2006	Nomura et al.	345/419
2006/0279750	A1*	12/2006	Ha	H04N 13/0454 358/1.2
2007/0139769	A1	6/2007	DeCustis et al.	
2007/0296859	A1	12/2007	Suzuki	

FOREIGN PATENT DOCUMENTS

JP	2006295289	A	10/2006
JP	2007325101	A	12/2007
JP	2008117289	A	5/2008
WO	2006137006	A2	12/2006
WO	2007069195	A2	6/2007

* cited by examiner

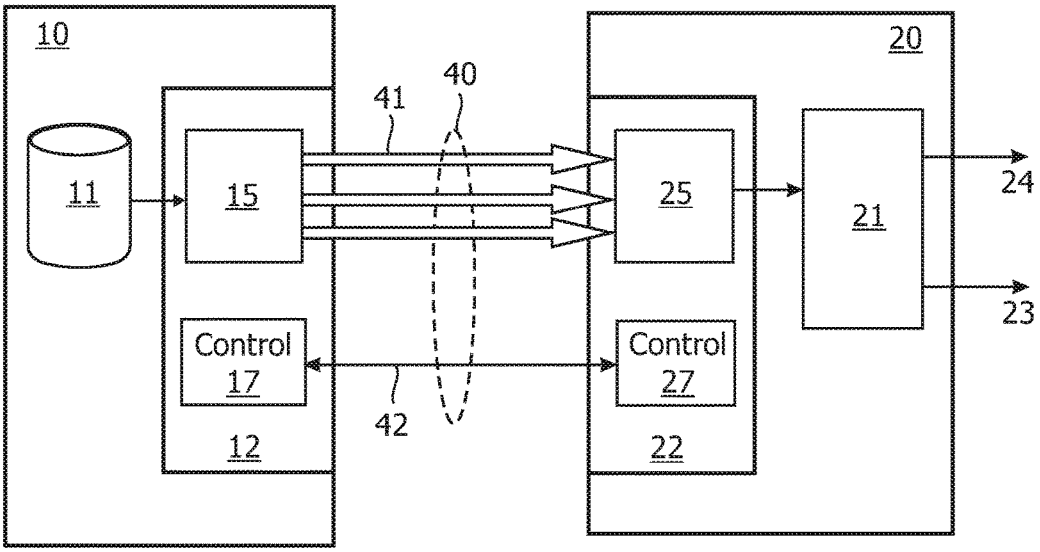
10
11
15
Control
17
12
41
40
42
20
25
Control
27
22
21
24
23

FIG. 1

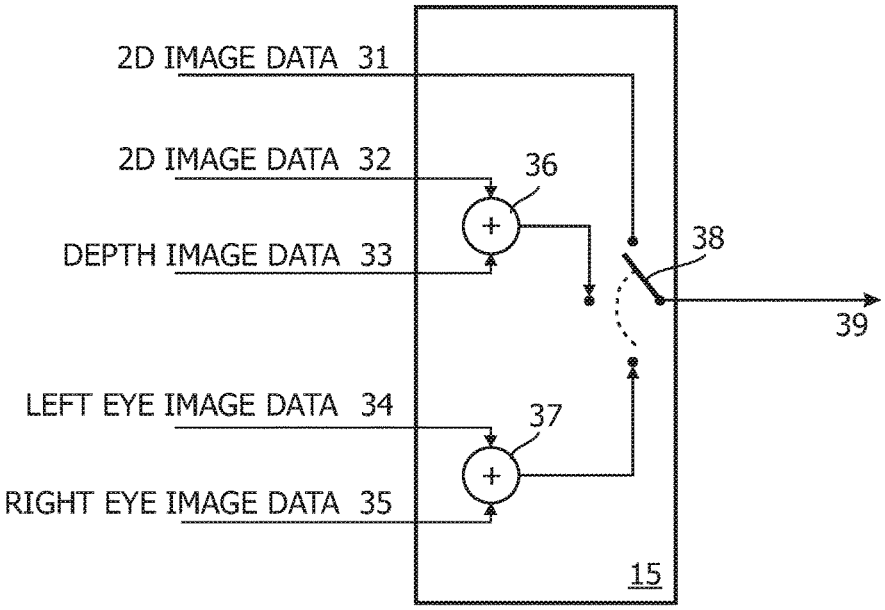
2D IMAGE DATA 31
2D IMAGE DATA 32
DEPTH IMAGE DATA 33
LEFT EYE IMAGE DATA 34
RIGHT EYE IMAGE DATA 35
36
37
38
39
15

FIG. 2

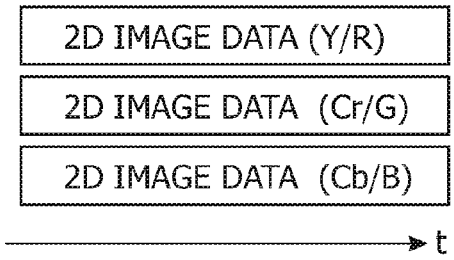

FIG. 3

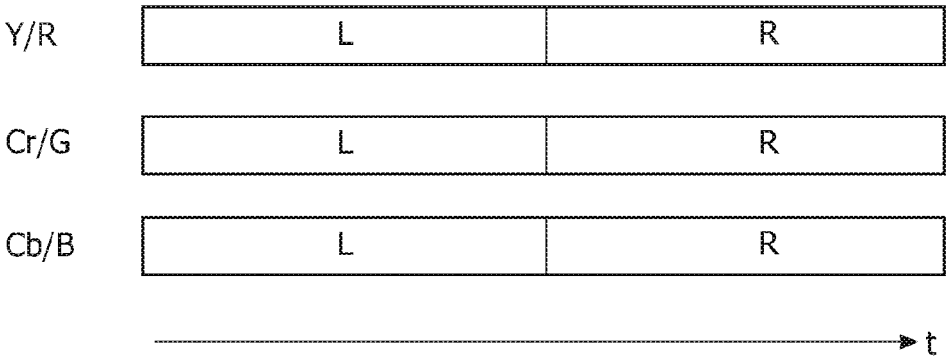

FIG. 4

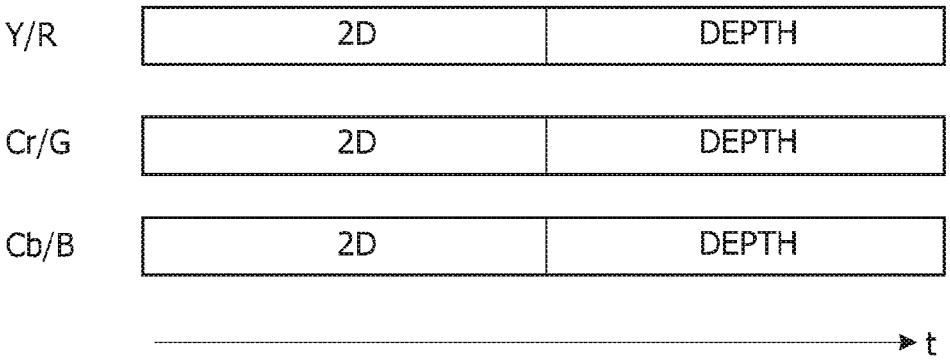

FIG. 5

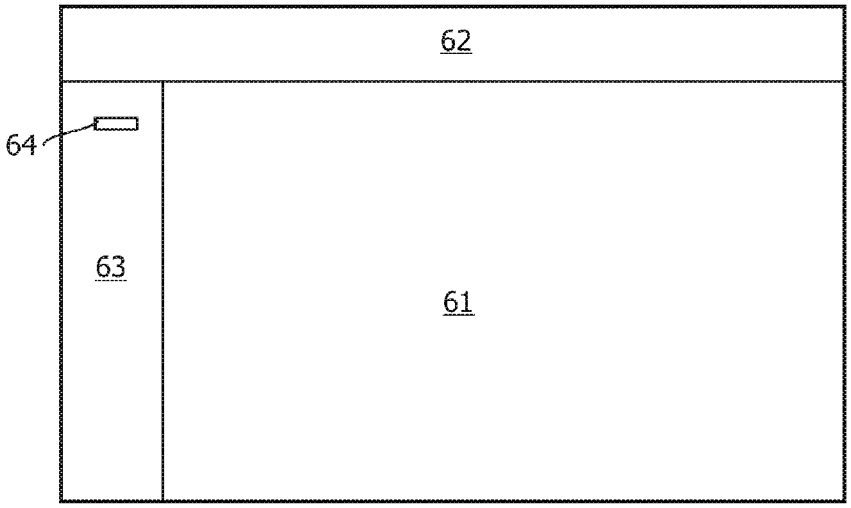
62
64
63
61

FIG. 6

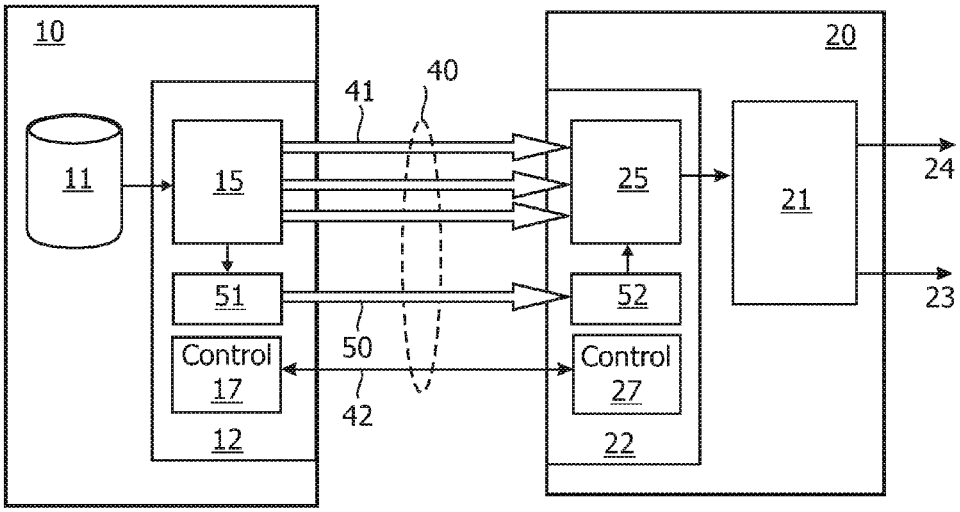
10
20
41
40
11
15
25
21
24
51
52
23
Control
17
50
Control
27
42
12
22

FIG. 7

TRANSPORT OF STEREOSCOPIC IMAGE DATA OVER A DISPLAY INTERFACE

CLAIM OF PRIORITY

This application claims, pursuant to 35 USC 120, as a Continuation, priority to, and the benefit of the earlier filing date of, of that patent application entitled "Transport of Stereoscopic Image Data over a Display Interface," filed on Feb. 24, 2015 and afforded Ser. No. 14/629,642 and patent application filed on Jun. 17, 2010 and afforded Ser. No. 12/808,685, now U.S. Pat. No. 9,036,010, issued May 19, 2015, which is a National Stage Filing of that patent application afforded serial number PCT/IB2008/055305, filed on Dec. 15, 2008, which claimed priority to that foreign filed patent application entitled "Transport of Stereoscopic Image Data over a Display Interface," filed on Dec. 18, 2007 and afforded a EPO serial number EP07123461.1, the contents of all of which are included in whole by reference herein.

FIELD OF THE INVENTION

This invention relates to transport of image data for the display of stereoscopic images.

BACKGROUND TO THE INVENTION

Various schemes for displaying three dimensional images (static, or moving images) are known. One well-known scheme simultaneously displays two images which are encoded for the left eye and right eye by means of different optical polarizations, or colors (e.g. red and green). A viewer wears a pair of special glasses which have lenses in front of the left and right eyes. The lenses are arranged to pass only the image intended for that eye, i.e. a left eye sees only the image intended for that eye. Another stereoscopic display technique sequentially presents an image intended for the left eye, and an image intended for the right eye. A user wears a special pair of glasses which are shuttered in synchronism with the displayed images, such that the left eye shutter is open during the period when the left eye image is displayed, and the right eye shutter is open during the period when the right eye image is displayed.

Auto stereoscopic display techniques remove the need for a viewer to wear special glasses. One known scheme uses a flat panel display with multisided slanted ventricular lenses mounted in front of display elements. An example of this kind of display is described in WO07/069195 A2.

Historically, 3D displays have been limited to specialized applications (e.g. medical imaging) or feature film presentation where it is possible to provide bespoke, high cost, display apparatus. There is now considerable interest in delivering stereoscopic content to a much wider audience, including the consumer electronics market. However, an issue with delivering stereoscopic images in a consumer electronics environment is that conventional displays, and display interfaces which connect displays or projectors to media players, have been designed specifically for the display of conventional 2D images.

Schemes for conveying stereoscopic image data within the confines of existing display interfaces have tended to sacrifice part of the active portion of an image to carry additional data necessary to render a stereoscopic image. The WOWvx format developed by Koninklijke Philips Electronics N.V. divides the overall display frame into a number of separate regions where different data can be

carried. The overall frame is divided into two sub-frames, arranged side-by-side: a first of the sub-frames carries 2D image data and a second of the sub-frames carries depth information. A header is added to the beginning of the upper left-hand corner of the frame. The image data is carried in a normal manner across a display interface. A display extracts depth data from the second sub-frame and creates a 3D image having a resolution of the first sub-frame. This 3D image can then be 'stretched' to occupy the full visible area of the display.

Digital displays and media players are increasingly being equipped with digital display interfaces such as the High Definition Multimedia Interface (HDMI). The present invention seeks to provide an alternative way of delivering stereoscopic image data over a digital display interface.

SUMMARY OF THE INVENTION

A first aspect of the present invention provides a digital display interface part for use in a first audio-visual device for supporting a digital display interface between the first audio-visual device and a second audio-visual device, the interface part comprising:

an input for receiving image data;

a formatter arranged to format the data for transport over the interface, wherein the formatter is operable in:

- a first mode in which the formatter generates a stream of first data elements which carry pixel data of a 2D image;
- a second mode in which the formatter generates a stream of second data elements which carry a multiplexed combination of components of a stereoscopic image.

An advantage of this arrangement is that the stereoscopic image data can be carried across a digital display interface using the existing capacity of the interface. Advantageously, where the display interface supports various color depths of image data, such as 48-bit color as well as conventional 24-bit color, the higher capacity transport modes which are intended to transport higher color depth data can be re-used to carry the multiplexed stereoscopic image data. Therefore, no additional capacity is required from the interface to carry the stereoscopic data, while still allowing good color depth for the stereoscopic content. It also has the benefit that little or no changes are required to an existing standard defining the display interface. It also allows stereoscopic image content to be sent with a resolution which is significantly higher than schemes which sacrifice part of the active image area to carry the stereo image data.

Advantageously, the second data elements have a capacity which is no greater than, and preferably the same as, the first data elements. This allows the stereoscopic data to be carried with minimal modification to the standards defining the interface.

The term "stereoscopic image data components" is intended to include any scheme which sends data to construct a stereoscopic (or autostereoscopic) display to a user, and includes: schemes which send left eye image data and right eye image data; schemes which send 2D image data and image depth data; schemes which send 2D image data and image depth data and occlusion information, indicating which objects in the picture are occluded by other objects.

In the case of a stereoscopic image which uses left eye and right eye image data, the formatter can use a portion of the second data element to carry the left eye image data and another portion of the second data element to carry the right eye image data.

In the case of a stereoscopic image which uses 2D+depth data, the formatter can use a portion of the second data element to carry the 2D image data and another portion of the second data element to carry the image depth data. The depth data may additionally be carried in other parts of a signal, such as periods within horizontal or vertical blanking periods. In HDMI, Data Island Packets are carried within these periods, and certain Data Island Packets can be identified as carrying depth data.

Advantageously, signaling information is sent across the interface identifying which mode the formatter is using and further signaling information can allow the second audio-visual device (e.g. a display or projector) to indicate whether it has the capability to render stereoscopic data sent in that formatting mode.

In a High Definition Multimedia Interface (HDMI), signaling can be carried by packets carried within the Data Islands between image data. The capability of a sink device to handle stereoscopic data can be signaled between interface parts using the HDMI Display Data Channel (DDC) channel, with capability data being stored in an Extended Display Identification Data (EDID) ROM at a sink.

A related aspect of the present invention provides a digital display interface part for use in an audio-visual device for supporting a digital display interface between the audio-visual device and another audio-visual device, the interface part comprising:

an input for receiving formatted image data from the interface;

a processor arranged to extract image data, the processor being operable in:

a first mode in which the processor extracts pixel image data for a 2D image from a stream of first data elements; and,

a second mode in which the processor demultiplexes components of a stereoscopic image from a stream of second data elements which carry a multiplexed combination of components of a stereoscopic image.

A related aspect of the present invention provides a method of formatting image data at a digital display interface part of a first audio-visual device for transport over a digital display interface between the first audio-visual device and a second audio-visual device, the method comprising:

receiving image data;

formatting the image data for transport over the interface by:

in a first mode, generating a stream of first data elements which carry pixel data of a 2D image; and,

in a second mode, generating a stream of second data elements which carry a multiplexed combination of components of a stereoscopic image.

A related aspect of the present invention provides a method of processing image data at a digital display interface part of an audio-visual device, the method comprising:

receiving formatted image data from the interface;

extracting image data by:

in a first mode, extracting pixel image data for a 2D image from a stream of first data elements; and,

in a second mode, demultiplexing components of a stereoscopic image from a stream of second data elements which carry a multiplexed combination of components of a stereoscopic image.

A further aspect of the invention provides a digital display interface part for use in a first audio-visual device for supporting a digital display interface between the first audio-visual device and a second audio-visual device, the interface part comprising:

an input for receiving stereoscopic image data;

a formatter arranged to format the data for transport over the interface, wherein the formatter is operable to send a portion of the stereoscopic image data over a primary image data transport channel of the interface and another portion of the stereoscopic image data over an auxiliary data channel.

The interface part can send signaling information across the interface identifying how stereoscopic data is distributed between the primary data channel and the auxiliary data channel.

Advantageously, the stereoscopic image data comprises 2D image data and image depth data and the formatter is arranged to send depth data across the auxiliary data channel.

The auxiliary data channel can comprise a separate line, or lines, within the same cable as the primary channel; a second cable which is separate from a first cable carrying the primary channel; or a wireless link.

A related aspect of the present invention provides a digital display interface part for use in an audio-visual device for supporting a digital display interface between the audio-visual device and another audio-visual device, the interface part comprising:

an input for connecting to a primary image data transport channel of the interface and an auxiliary data channel;

a processor arranged to extract a portion of the stereoscopic image data from the primary image data transport channel of the interface and another portion of the stereoscopic image data from the auxiliary data channel.

A related aspect of the present invention provides a method of sending stereoscopic image data over a digital display interface between a first audio-visual device and a second audio-visual device, comprising, at the first audio-visual device:

receiving stereoscopic image data for transport over the interface;

sending a portion of the stereoscopic image data over a primary image data transport channel of the interface and another portion of the stereoscopic image data over an auxiliary data channel.

A related aspect of the present invention provides a method of processing stereoscopic image data at an audio-visual device for supporting a digital display interface between the audio-visual device and another audio-visual device, the method comprising:

extracting a portion of the stereoscopic image data from a primary image data transport channel of the interface and another portion of the stereoscopic image data from an auxiliary data channel.

A further aspect of the invention provides a digital display interface part for use in a first audio-visual device for supporting a digital display interface between the first audio-visual device and a second audio-visual device, the interface part comprising:

an input for receiving stereoscopic image data;

a formatter arranged to generate a stream of image data carrying data elements and auxiliary data carrying data elements at intervals in the stream, and wherein signaling information for use in decoding the stereoscopic image data is carried in at least one of the auxiliary data elements.

Where the stereoscopic image data comprises left eye image data and right eye image data, the signaling information can specify what data elements carry the left eye image data and what data elements carry the right eye image data. Where the left eye images and right eye images are interleaved on a line-by-line basis, the signaling information can

be sent as often as once for each pair of interleaved lines, although it can be sent much less frequently, such as once per field or frame.

Where the stereoscopic image data comprises 2D image data and depth information, the signaling information can specify at least one of: the transmission location, quantity of the depth information.

Advantageously, where the stereoscopic image data has a plurality of different possible formats, the signaling information specifies the format. One of the formats for the stereoscopic image data can be a scheme which encodes the stereoscopic image data within a conventional 2D image format.

Advantageously, the signaling information is carried in a horizontal or vertical blanking period and for a High Definition Multimedia Interface (HDMI) the signaling information can be sent in a Data Island Packet.

A related aspect of the present invention provides a digital display interface part for use in an audio-visual device for supporting a digital display interface between the audio-visual device and another audio-visual device, the interface part comprising:

an input for receiving, from the interface, a stream of image data carrying data elements and auxiliary data carrying data elements at intervals in the stream;

using signaling information carried in at least one of the auxiliary data elements to decode the stereoscopic image data.

A related aspect of the present invention provides a method of sending stereoscopic image data over a digital display interface between a first audio-visual device and a second audio-visual device comprising, at the first audio-visual device:

receiving stereoscopic image data;

generating a stream of image data carrying data elements and auxiliary data carrying data elements at intervals in the stream, and wherein signaling information for use in decoding the stereoscopic image data is carried in at least one of the auxiliary data elements.

A related aspect of the present invention provides a method of processing stereoscopic image data at a digital display interface part of an audio-visual device, the method comprising:

receiving, from the interface, a stream of image data carrying data elements and auxiliary data carrying data elements at intervals in the stream;

using signaling information carried in at least one of the auxiliary data elements to decode the stereoscopic image data.

A further aspect of the invention provides a digital display interface part for use in a first audio-visual device for supporting a digital display interface between the first audio-visual device and a second audio-visual device, the interface part comprising:

an input for receiving stereoscopic image data components;

a formatter arranged to generate a stream of image data carrying data elements and auxiliary data carrying data elements at intervals in the stream, and wherein the stereoscopic image data is distributed between the image data carrying data elements and the auxiliary data carrying data elements.

Advantageously, the stereoscopic image data components are 2D image data and image depth data and wherein the depth data is carried in the auxiliary data carrying data elements. Advantageously, the stream further comprises signaling information, carried within auxiliary data carrying data elements, specifying which part of an image the depth information relates to.

The auxiliary data carrying data elements are sent in a horizontal or vertical blanking period, such as HDMI Data Island Packets.

A related aspect of the present invention provides a digital display interface part for use in an audio-visual device for supporting a digital display interface between the audio-visual device and another audio-visual device, the interface part comprising:

an input for receiving, from the interface, a stream of image data carrying data elements and auxiliary data carrying data elements;

a processor arranged to extract stereoscopic image data from the image data carrying data elements and at least part of the stereoscopic image data from the auxiliary data carrying data elements.

A related aspect of the present invention provides a method of sending stereoscopic data across a digital display interface between a first audio-visual device and a second audio-visual device, the method comprising, at the first audio-visual device:

receiving stereoscopic image data components;

generating a stream of image data carrying data elements and auxiliary data carrying data elements at intervals in the stream, and distributing the stereoscopic image data between the image data carrying data elements and the auxiliary data carrying data elements.

A related aspect of the present invention provides a method of processing stereoscopic image data at a digital display interface part of an audio-visual device, the method comprising:

receiving, from the interface, a stream of image data carrying data elements and auxiliary data carrying data elements;

extracting stereoscopic image data from the image data carrying data elements and at least part of the stereoscopic image data from the auxiliary data carrying data elements.

The functionality described here can be implemented in software, hardware or a combination of these. The invention can be implemented by means of hardware comprising several distinct elements, and by means of a suitably programmed computer. Accordingly, further aspects of the invention provide software for implementing any of the methods. The software may be stored on an electronic memory device, hard disk, optical disk or other machine-readable storage medium. The software may be delivered as a computer program product on a machine-readable carrier or it may be downloaded to the AV device via a network connection.

The invention also extends to signals, for transmission over the display interface, which result from any of the methods.

Features of the various aspects of the invention can be combined.

BRIEF DESCRIPTION OF THE DRAWINGS

Embodiments of the invention will be described, by way of example only, with reference to the accompanying drawings in which:

FIG. **1** shows a display interface for carrying image data between two AV devise;

FIG. **2** shows a formatting function at one end of the interface;

FIG. **3** shows a conventional way of sending 2D image data across a display interface;

FIGS. **4** and **5** show ways of sending stereoscopic image data across a display interface;

FIG. **6** shows format of an HDMI video frame; and,

FIG. **7** shows a display interface which includes an auxiliary data channel.

DESCRIPTION OF PREFERRED EMBODIMENTS

FIG. **1** shows an example scenario in which the invention can be used. In FIG. **1**, an AV device **10** which is capable of providing a source of digital AV content is connected to a display (or video projector) **20** via a digital display interface (DDI) **40**. Interface parts **12**, **22** in devices **10**, **20** support the interface **40**, and provide functions such as formatting signals into the form required by standards defining the interface **40**. The source device **10** can be a device which can retrieve digital AV content from a store **11**, such as a hard disk, a solid state memory or an optical disc or any other fixed or removable storage medium or device. Examples of device **10** include a personal video recorder (PVR), an optical disc player such as a DVD player, an HD-DVD player or a Blu-ray player. Alternatively, device **10** can take the form of a set-top box which receives content from a distribution channel (such as a broadcast channel or broadband network or other type of network (e.g. home network)).

There are a variety of methods for displaying stereoscopic (3D) images. The two main methods for transferring 3D image data across an interface are: to transmit two complete, separate, stereoscopic images representing the left and right views as seen by human eyes; and a normal 2D image with associated depth information that can be used to generate the stereoscopic images within the display. The first method generally requires a significantly higher bandwidth (up to twice that needed for a 2D image) over the interface, but needs little processing in the display, while the second method can require a smaller increase in bandwidth, but at the expense of some fast real-time processing in the display to process the depth information.

Current digital display interfaces, such as HDMI, offer a very high bandwidth. These interfaces transfer uncompressed pixel information, unlike other transport mechanisms (such as Ethernet, USB, IEEE 1394) which have to transfer compressed images because of their bandwidth limitations. Originally, images transferred by HDMI were limited to 8 bits per color per pixel, so-called "24-bit color". Improvements to HDMI from version 1.3 have allowed HDMI to carry more bits per pixel, with the options of carrying 10, 12 and 16 bits per color per pixel, i.e. up to 48-bit color. HDMI describes Deep Color Pixel Packing modes (HDMI 1.3a, section 6.5.3) which allow the higher color depths just described.

According to one embodiment of the present invention, the deep color modes are used to transport stereoscopic image data. The stereoscopic image data can be left image data+right image data or 2D+depth information. FIG. **2** shows a formatting function **15** used within an interface part **12**. The formatter **15** can selectively operate in one of a number of different modes. This is shown schematically by formatter selecting one of the sets of inputs: 2D image data **31**; 2D+depth image data **32**, **33**; or left eye and right eye image data **34**, **35** for processing and selectively connecting **38** to an interface output **39**. Formatter **15** can receive conventional 2D image data **31**, such as 24-bit color image data **31**. Typically this is received in an RGB or component video (Y, Cr, Cb) format. When receiving stereoscopic image data, formatter **15** multiplexes **36**, **37** the image data components. For left eye/right eye image data, the left eye data and right eye data will typically be taken from the same pixel in the left eye/right eye frames or fields of the images, although other algorithms for combining pixels are also within the scope of the present invention. For 2D image+depth information, the 2D image data will typically correspond to a single pixel (e.g. RGB or component video format) and the depth information can take a different form, and may correspond to a different region of the image to the pixel of the 2D image. The formatter **15** may only support one of the 3D formats (i.e. just L+R, or just 2D+depth) or both types of 3D format.

FIGS. **3** to **5** show a range of different ways in which the image data can be multiplexed. FIG. **3** shows conventional image data. In HDMI, the three color components (R, G, B or Y, Cr, Cb) are sent simultaneously on three Transition Minimised Differential Signaling (TMDS) channels **41**. TMDS refers to line-level coding applied to the data to maintain an approximate DC balance as well as a reduction in the number of transitions in the data stream. Each color component can be sent using a standard color depth (e.g. 8 bits per color per pixel) or an enhanced color depth, such as 16 bits per color per pixel. FIG. **4** shows a way in which stereoscopic left eye/right eye data can be multiplexed. The components of the left eye data (R, G, B or Y, Cr, Cb) are sent in a first portion of each data-carrying element, and then immediately followed by the components of the right eye data (R, G, B or Y, Cr, Cb). Both left eye and right eye are either sent within the same packet, consecutive image data packets, or parts of consecutive image data packets. As an example, where a 16-bit per color per pixel mode is used, bits **0-7** can carry the left image Y data and bits **8-15** carry the right image Y data. HDMI 1.3a currently allows a color depth of up to 16-bits per color per pixel (48-bit color). FIG. **4** shows how two 24-bit color images can be carried within the existing 48-bit color mode with no additional capacity required from the interface. It will be appreciated that future revisions of HDMI (and other) specifications may extend the bandwidth to permit a larger color depth, which will allow each of the left eye and right eye images to use more bits per pixel, so allowing richer 3D images.

FIG. **5** shows a scheme for sending 2D image data+depth information where the 2D data is sent first, followed by the depth data. Each color component (R, G, B or Y, Cr, Cb) follows the same format. In FIG. **6** the capacity of the packet is divided equally between the 2D data and depth information, although any other division is possible. It may be possible to send significantly less depth data than 2D data, which can allow the 2D image to use a wide color palette and/or high resolution. It is also possible to send some—or all—of the depth information in a different part of the transmitted data stream, such as within specific HDMI Data Island Packets carried within the horizontal and vertical line blanking intervals. This is particularly useful for depth data that is not attached directly to a specific pixel, for instance, it applies to a region of the image.

Interface part **12** sends signaling **42** which indicates the format of the image data, e.g. indicating whether the image data is 2D, stereo (L+R) or stereo (2D+depth). The signaling can also indicate further details of the multiplexing scheme, such as which color depth mode is being used to carry the multiplexed data, the number of bits per data element that are allocated to 2D data and the number of bits per data element that are allocated to depth data. This signaling allows flexibility in how the stereo data is allocated to data

carrying elements sent across the interface **40** and allows for the amount of Depth information to be changed dynamically, according to the requirements of the content which is to be displayed. In HDMI, Data Island Packets are sent in horizontal and vertical line blanking periods. The signaling information can conveniently be carried within a Data Island Packet. FIG. **6** shows the layout of an HDMI video frame, showing a region **61** where pixel data is sent across TMDS channels, a horizontal blanking period **63** and a vertical blanking period. Data Island Packets **64** are sent within Data Island periods positioned within the horizontal and vertical blanking periods **62**, **63**. The signaling data can be carried in a General Control Packet, an Auxiliary Video InfoFrame (AVI) packet or an InfoFrame Packet specifically designated for this purpose. If depth data is carried both within the pixel data carrying data elements and other places of the stream, the signaling can indicate where the depth data is to be found. The amount of depth data and the location(s) of the depth data can vary on a dynamic basis during an image, or sequence of images, depending on the required color depth, resolution or complexity of the image (e.g. the amount of depth information within an image).

AV device **20** includes a processor **21** applies suitable processing to the data to render a 3D image. In the case of stereoscopic display, where a user is simultaneously or sequentially presented with separate left and right eye images, processor **21** constructs the separate left eye/right eye images and outputs them **24** at the required time. For sequential stereoscopic displays, a further output **23** is provided to synchronize operation of shuttered glasses. In the case of an autostereoscopic display, such as a display using a ventricular screen, processor **21** constructs the image data which is required to be output **24** to the display elements to generate the autostereoscopic display. Interface part **22** and processor **21** use the signaling information sent across the interface to:

determine if stereoscopic image data is being sent; determine what general stereoscopic image format is being used (e.g. left+right image; 2D+depth; stereo encoded within active image data);

determine more detail of how the image data is being encoded on the interface, and therefore what decoding scheme should be used at the receiver. This may include information about which deep color mode is being used, bit allocation between 2D and depth data, transmission location of depth data (e.g. specific Data Island Packets or auxiliary channel locations).

Further signaling between the AV devices **10**, **20** allows the sink device **20** to indicate it's capabilities to receive and process image data. The capability information may indicate the maximum allowed bandwidth for each mode of sending 2D and stereo image data. In HDMI, the capability of a sink device can use the Display Data Channel (DDC) channel, with capability data being stored in an Extended Display Identification Data (EDID) ROM at a sink.

The interface may support other schemes for sending stereoscopic data. A first alternative is to send two separate complete images, carried sequentially (such as a complete left image followed by a complete right image). The indication of the left and right image can be indicated by signaling information carried directly adjacent the position of the image data, such as an HDMI Data Island Packet.

A second alternative is to send two separate images, but with the lines of the two images interleaved. For example, the first line of the left image is sent first, followed by the first line of the right image, and so on.

A third alternative is to send a 2D image in a conventional manner, and to carry depth information in specific Data Island Packets dedicated to carrying depth information.

In each of these alternatives, signaling information carried directly adjacent the position of the image data, such as an HDMI Data Island Packet, can indicate what the image data corresponds to. For the third alternative, the signaling information can specify which part of the image the depth data relates to. As noted above, the HDMI Data Island Packets can be a General Control Packet, an Auxiliary Video InfoFrame (AVI) packet or an InfoFrame Packet specifically designated for this purpose. The information in these packets can identify:

the current stereoscopic method (field, line or byte) being used (see above);

whether a Deep Color Pixel Packing mode is being used to carry 3D information or a Deep Color Mode 2D image;

the mapping of left and right images to the current field, line or byte;

how many of the Data Island Packet packets/sub-packets are being uses to carry Depth information;

the location of other stereoscopic image data components.

The embodiments above show how the separate stereoscopic image components can be carried over a display interface. For some applications, especially those intended for display on a ventricular screen, the picture received at the interface part **12** may already be encoded with stereoscopic content. As an example, a WOWvx encoded image as described in the background section, comprises a 2D image, depth information and/or occlusion information already embedded into separate regions of a conventional image. In one embodiment, the 2D image is carried in one quarter of the image pixels (e.g. in half a line for half the total lines in the picture). The associated depth and/or occlusion information is carried in the other three-quarters of the presented picture. In this case, the lines of the picture are transported across the HDMI link as thought they were a single 2D image occupying all of each line, for all the available lines. In order to identify such a 3D image, an HDMI Data Island Packet (typically a General Control Packet, Auxiliary Video InfoFrame (AVI) packet or specifically designated InfoFrame Packet) indicates this method. The information in this Packet identifies:

the current stereoscopic method (e.g. 2D+Depth) being used;

any information pertaining to this method which is required by the display.

The sink identifies the transmitted picture as using this method and processes the picture accordingly. The sink also carries information in the EDID indicating that it supports this method.

In the above description, stereoscopic image data is carried over a channel of an interface (e.g. an HDMI Transport Stream) either by multiplexing the stereoscopic image data within normal data carrying elements of the channels, or by carrying at least part of the stereoscopic image data within other packets (e.g. Data Island Packets) carried over the same channel. A further embodiment of the invention carries at least some of the stereoscopic image data over an associated high speed auxiliary data link such as Gigabit Ethernet, IEEE 1394 or a high-speed wireless link. Signaling information identifies which information is carried by the primary channels of the interface and which is carried by the associated auxiliary link. In HDMI, the signaling information can be carried in Data Island Packets. Similar, or complementary, identification information may also be carried on the associated high speed auxiliary link.

The sink uses the received Data Island Packets to identify which information is carried on which link and combines the two streams of data in the necessary format for presentation or processing. Depending on the characteristics of the HDMI and associated auxiliary link, it may be necessary to buffer the data contained in the two streams in order to maintain synchronicity between them. In one embodiment using the above embodiment, the associated wires for the auxiliary link are carried within the HDMI cable; this option is shown in FIG. **7** by additional line **50** connecting modules **51**, **52** in interface parts **12**, **22**. In other embodiments, the associated auxiliary link is carried in a separate cable connecting the devices **10**, **20**, or by a high-speed wireless link.

Other variations to the disclosed embodiments can be understood and effected by those skilled in the art in practicing the claimed invention, from a study of the drawings, the disclosure, and the appended claims. In the claims, the word "comprising" does not exclude other elements or steps, and the indefinite article "a" or "an" does not exclude a plurality. A single processor or other unit may fulfill the functions of several items recited in the claims. The mere fact that certain measures are recited in mutually different dependent claims does not indicate that a combination of these measured cannot be used to advantage. Any reference signs in the claims should not be construed as limiting the scope.

What is claimed is:

1. An interface part for a digital display, for use in a first audio-visual device for supporting a digital display transmission interface between the first audio-visual device and a second audio-visual device, the interface for transmitting uncompressed pixel information, the interface part comprising:

an input for receiving image data;

a formatter configured to format the received digital data for transport over a transmission interface, wherein the formatter is operable in:

a first mode in which the formatter generates a stream of first data elements comprising pixel data of a 2D image; and;

a second mode, different from the first mode, operating at different times than the first mode, in which the formatter generates a stream of second data elements comprising a multiplexed combination of components of a stereoscopic image;

wherein the interface part is configured to send signaling information across the transmission interface, the signaling information identifying which mode the formatter is using;

wherein the signaling information comprises information with respect to a multiplexing scheme used in a second mode for enabling the second audio-visual device to determine a decoding scheme to be used to decode a stereoscopic image format being used in the second mode;

wherein the formatter is configured to generate a stream of data elements comprising either the first or second data elements and auxiliary data carrying data elements at intervals in the stream; and

the signaling information being carried in the auxiliary data elements.

2. The interface part of claim **1**, wherein the signaling information comprises information for enabling the second audio-visual device to determine a stereoscopic image format being used in the second mode on which the decoding scheme is based.

3. The interface part of claim **1**, wherein the signaling information is carried in a horizontal or vertical blanking period.

4. The interface part according claim **1**, wherein the interface is a High Definition Multimedia Interface (HDMI) and the signaling information is sent in a Data Island Packet between image data.

5. The interface part of claim **4**, which is arranged to receive signaling information across the interface specifying capabilities of the second audio-visual device.

6. The interface part of claim **1**, wherein the stereoscopic image data components include left eye image data and right eye image data.

7. The interface part of claim **6** arranged for sending the left eye image data and the right eye image data sequentially.

8. The interface part of claim **7** wherein an indication of the left and right image data being indicated by signaling information carried directly adjacent a position of the image data.

9. The interface part of claim **6** arranged for sending the left eye image data and the right eye image data by line interleaving.

10. The interface part of claim **1**, wherein the stereoscopic image data components are 2D image data and image depth data.

11. The interface part of claim **9** wherein the formatter is arranged to use a portion of the second data element to carry the 2D image data and another portion of the second data element to carry the image depth data.

12. The interface part of claim **1**, wherein the signaling information comprises information for enabling the second audio-visual device to determine a stereoscopic image format being used.

13. An interface part for a digital display, for use in an audio-visual device for supporting a digital display transmission interface between a first audio-visual device and a second audio-visual device, the digital display interface for receiving uncompressed pixel information, the interface part comprising:

an input for receiving formatted image data from the transmission interface;

a processor arranged to extract image data, the processor being operable in:

a first mode in which the processor extracts pixel image data for a 2D image from a stream of first data elements; and;

a second mode, different from the first mode, operating at different times than the first mode, in which the processor de-multiplexes components of a stereoscopic image from a stream of second data elements comprising a multiplexed combination of components of a stereoscopic image;

wherein the interface part is configured to receive signaling information across the transmission interface, the signaling information identifying which mode the formatter is using;

wherein the signaling information comprises information with respect to a multiplexing scheme used in a second mode for enabling the second audio-visual device to determine a decoding scheme to be used to decode a stereoscopic image format being used in the second mode;

wherein the stream of data elements comprising either the first or second data elements and auxiliary data carrying data elements at intervals in the stream; and

the signaling information being carried in the auxiliary data elements.

14. The interface part of claim **13**, wherein the signaling information comprises information for enabling the second audio-visual device to determine a stereoscopic image format being used, the interface part arranged to determine a stereoscopic image format being used on which the decoding scheme is based.

15. The interface part according claim **13**, wherein the interface is a High Definition Multimedia Interface (HDMI) and the signaling information is received in a Data Island Packet between image data.

16. The interface part of claim **13** wherein the stereoscopic image data components are left eye image data and right eye image data.

17. A method of operating an interface part of a digital display for formatting image data at a digital display transmission interface of a first audio-visual device for transport over the digital display transmission interface between the first audio-visual device and a second audio-visual device, the digital display transmission interface for transmitting uncompressed pixel information, the method comprising:

in an interface part;

receiving image data;

formatting the image data for transport over the transmission interface by:

in a first mode, generating a stream of first data elements comprising pixel data of a 2D image; and;

in a second mode, different from the first mode, operating at different times than the first mode, generating a stream of second data elements comprising a multiplexed combination of components of a stereoscopic image;

wherein the interface part sends signaling information across the transmission interface, the signaling information identifying which mode the formatter is using;

wherein the signaling information comprises information with respect to a multiplexing scheme used in a second mode for enabling the second audio-visual device to determine a decoding scheme to be used to decode a stereoscopic image format being used in the second mode;

wherein the formatting generates a stream of data elements comprising either the first or second data elements and auxiliary data carrying data elements at intervals in the stream; and

wherein the signaling information being carried in the auxiliary data elements.

18. A method of operating an interface part of a digital display transmission interface of an audio-visual device, the interface part processing image data at the digital display transmission interface of the audio-visual device, the digital display transmission interface for receiving uncompressed pixel information, the method comprising:

in an interface part;

receiving formatted image data from the interface;

extracting image data by:

in a first mode, extracting pixel image data for a 2D image from a stream of first data elements; and;

in a second mode, demultiplexing components of a stereoscopic image from a stream of second data elements comprising a multiplexed combination of components of a stereoscopic image;

wherein the interface part sends signaling information across the interface, the signaling information identifying which mode the formatter is using;

wherein the signaling information comprises information with respect to a multiplexing scheme used in a second mode for enabling the second audio-visual device to determine a decoding scheme to be used to decode a stereoscopic image format being used in the second mode;

wherein the stream of data elements comprising either the first or second data elements and auxiliary data carrying data elements at intervals in the stream; and

the signaling information being carried in the auxiliary data elements.

19. A computer-readable storage-medium that is not a transitory propagating signal or wave, the medium comprising control information for controlling an operation of an interface part of a digital display for formatting image data at a digital display transmission interface of a first audio-visual device for transport over the digital display transmission interface between the first audio-visual device and a second audio-visual device, the digital display transmission interface for transmitting uncompressed pixel information, the method comprising:

in an interface part;

receiving image data;

formatting the image data for transport over the interface by:

in a first mode, generating a stream of first data elements comprising pixel data of a 2D image; and

in a second mode, different from the first mode, operating at different times than the first mode, generating a stream of second data elements comprising a multiplexed combination of components of a stereoscopic image;

wherein the interface part sends signaling information across the transmission interface, the signaling information identifying which mode the formatter is using;

wherein the signaling information comprises information with respect to a multiplexing scheme used in a second mode for enabling the second audio-visual device to determine a decoding scheme to be used to decode a stereoscopic image format being used in the second mode;

wherein the formatting generates a stream of data elements comprising either the first or second data elements and auxiliary data carrying data elements at intervals in the stream; and

wherein the signaling information being carried in the auxiliary data elements.

20. A computer-readable storage-medium that is not a transitory propagating signal or wave, the medium comprising control information for controlling an operation of an interface part of a digital display transmission interface of an audio-visual device, the interface part processing image data at the digital display transmission interface of the audio-visual device, the digital display transmission interface for receiving uncompressed pixel information, the method comprising:

in an interface part;

receiving formatted image data from the interface;

extracting image data by:

in a first mode, extracting pixel image data for a 2D image from a stream of first data elements; and;

in a second mode, different from the first mode, operating at different times than the first mode, demultiplexing components of a stereoscopic image from a stream of second data elements

comprising a multiplexed combination of components of a stereoscopic image;

wherein the interface part sends signaling information across the interface, the signaling information identifying which mode the formatter is using;

wherein the signaling information comprises information with respect to a multiplexing scheme used in a second mode for enabling the second audio-visual device to determine a decoding scheme to be used to decode a stereoscopic image format being used in the second mode;

wherein the stream of data elements comprising either the first or second data elements and auxiliary data carrying data elements at intervals in the stream; and

the signaling information being carried in the auxiliary data elements.

21. Control structures encoded in a computer-readable storage-medium that is not a transitory propagating signal or wave, for controlling the operation of an interface part of a digital display for formatting image data at a digital display transmission interface of a first audio-visual device for transport over the digital display transmission interface between the first audio-visual device and a second audio-visual device, the digital display interface for transmitting uncompressed pixel information, the method comprising:

in an interface part;

receiving image data;

formatting the image data for transport over the interface by:

in a first mode, generating a stream of first data elements comprising pixel data of a 2D image; and;

in a second mode, different from the first mode, operating at different times than the first mode, generating a stream of second data elements which carry comprising a multiplexed combination of components of a stereoscopic image;

wherein the interface part sends signaling information across the interface, the signaling information identifying which mode the formatter is using;

wherein the signaling information comprises information with respect to a multiplexing scheme used in a second mode for enabling the second audio-visual device to determine a decoding scheme to be used to decode a stereoscopic image format being used in the second mode;

wherein the formatting generates a stream of data elements comprising either the first or second data elements and auxiliary data carrying data elements at intervals in the stream; and

wherein the signaling information being carried in the auxiliary data elements.

22. Control structures encoded in a computer-readable storage-medium that is not a transitory propagating signal or wave, for controlling the operation of an interface part of a digital display transmission interface of an audio-visual device, the interface part processing image data at the digital display interface of the audio-visual device, the digital display transmission interface for receiving uncompressed pixel information, the method comprising:

in an interface part;

receiving formatted image data from the interface;

extracting image data by:

in a first mode, extracting pixel image data for a 2D image from a stream of first data elements; and;

in a second mode, different from the first mode, operating at different times than the first mode, demultiplexing components of a stereoscopic image from a stream of second data elements comprising a multiplexed combination of components of a stereoscopic image;

wherein the interface part sends signaling information across the interface, the signaling information identifying which mode the formatter is using;

wherein the signaling information comprises information with respect to a multiplexing scheme used in a second mode for enabling the second audio-visual device to determine a decoding scheme to be used to decode a stereoscopic image format being used in the second mode;

wherein the stream of data elements comprising either the first or second data elements and auxiliary data carrying data elements at intervals in the stream; and

the signaling information being carried in the auxiliary data elements.

* * * * *

EXHIBIT 4

US007225282B1

(12) **United States Patent**
Lyle

(10) **Patent No.: US 7,225,282 B1**
(45) **Date of Patent: May 29, 2007**

(54) **METHOD AND APPARATUS FOR A TWO-WIRE SERIAL COMMAND BUS INTERFACE**

(75) Inventor: **Jim Lyle**, Santa Clara, CA (US)

(73) Assignee: **Silicon Image, Inc.**, Sunnyvale, CA (US)

(*) Notice: Subject to any disclaimer, the term of this patent is extended or adjusted under 35 U.S.C. 154(b) by 1012 days.

(21) Appl. No.: **10/171,820**

(22) Filed: **Jun. 13, 2002**

(51) **Int. Cl.**
G06F 13/42 (2006.01)

(52) **U.S. Cl.** **710/105**; 710/306

(58) **Field of Classification Search** 710/100, 710/105, 306, 310; 370/401
See application file for complete search history.

(56) **References Cited**

U.S. PATENT DOCUMENTS

4,818,994 A * 4/1989 Orth et al. 340/870.21
6,397,277 B1 * 5/2002 Kato et al. 710/104
6,996,112 B2 * 2/2006 Fukunaga et al. 370/401
7,060,006 B1 * 6/2006 Watterson et al. 482/54
2002/0108011 A1 * 8/2002 Tanha 710/306
2004/0049616 A1 * 3/2004 Dunstan et al. 710/100
2005/0031127 A1 * 2/2005 Gosior et al. 381/2
2005/0246475 A1 * 11/2005 Ervin 710/306

* cited by examiner

Primary Examiner—Rehana Perveen
Assistant Examiner—Clifford Knoll
(74) *Attorney, Agent, or Firm*—Perkins Coie LLP

(57) **ABSTRACT**

A method for bi-directional transmission of data between a source and a sink over a two-wire interface includes re-mapping a data signal and a clock signal from a first local bus on the source into a different protocol signal. Transmitting the different protocol signal from the source to the sink over the two-wire interface. Re-mapping the different protocol signal back into the data signal and the clock signal for use on a second local bus on the sink. Re-mapping the data signal and the clock signal from the second local bus into the different protocol signal; and transmitting the different protocol signal from the sink to the source over the two-wire interface.

37 Claims, 10 Drawing Sheets

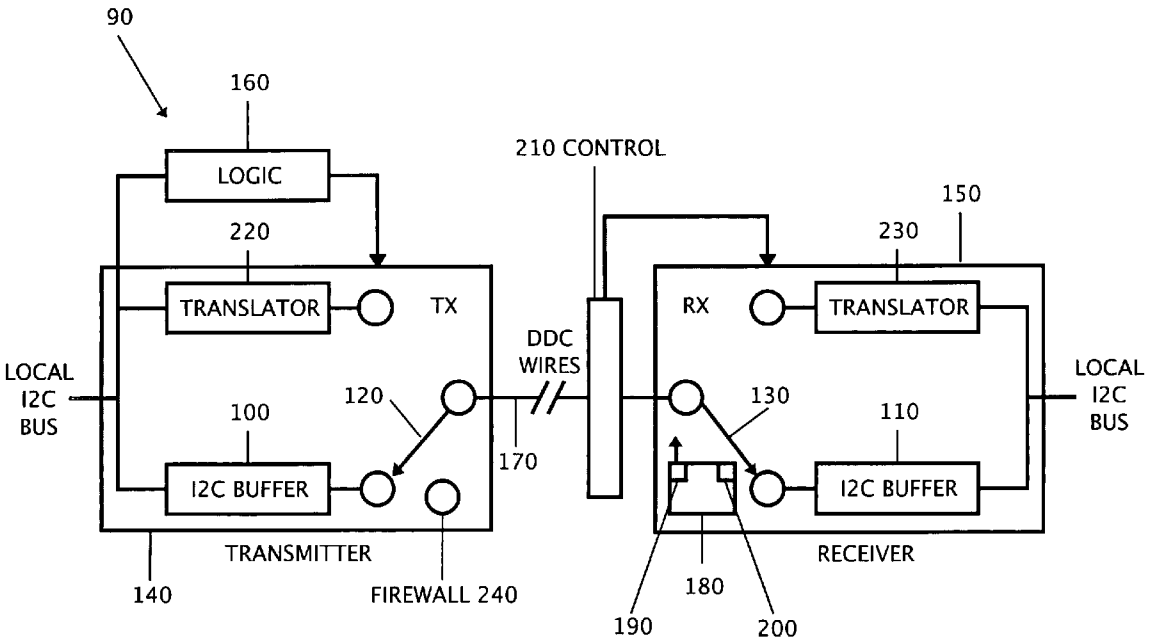

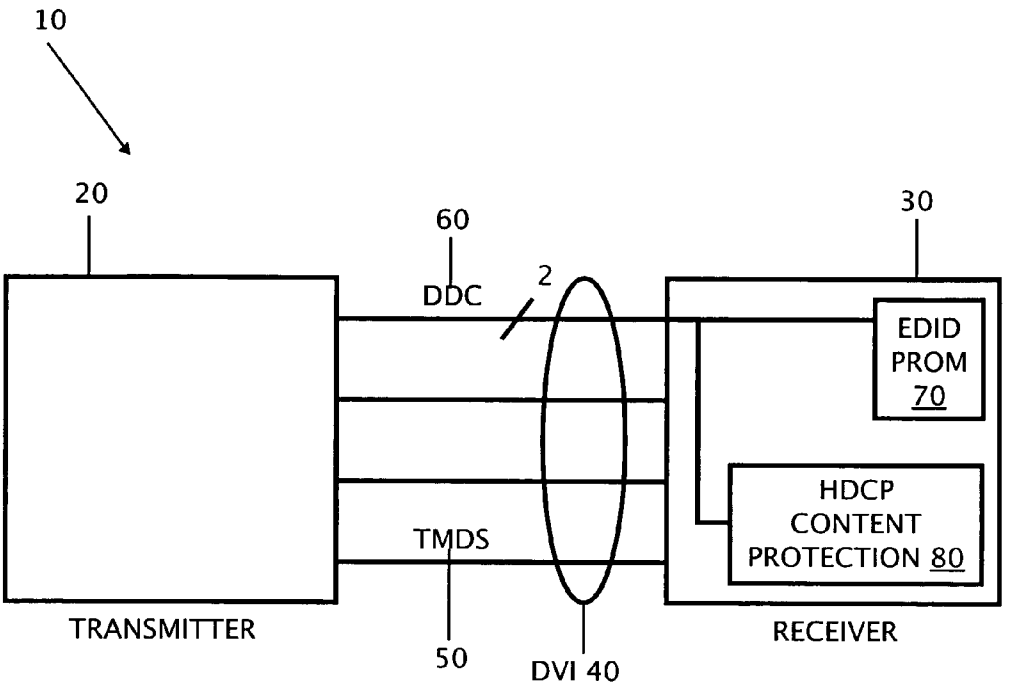

FIG. 1
(PRIOR ART)

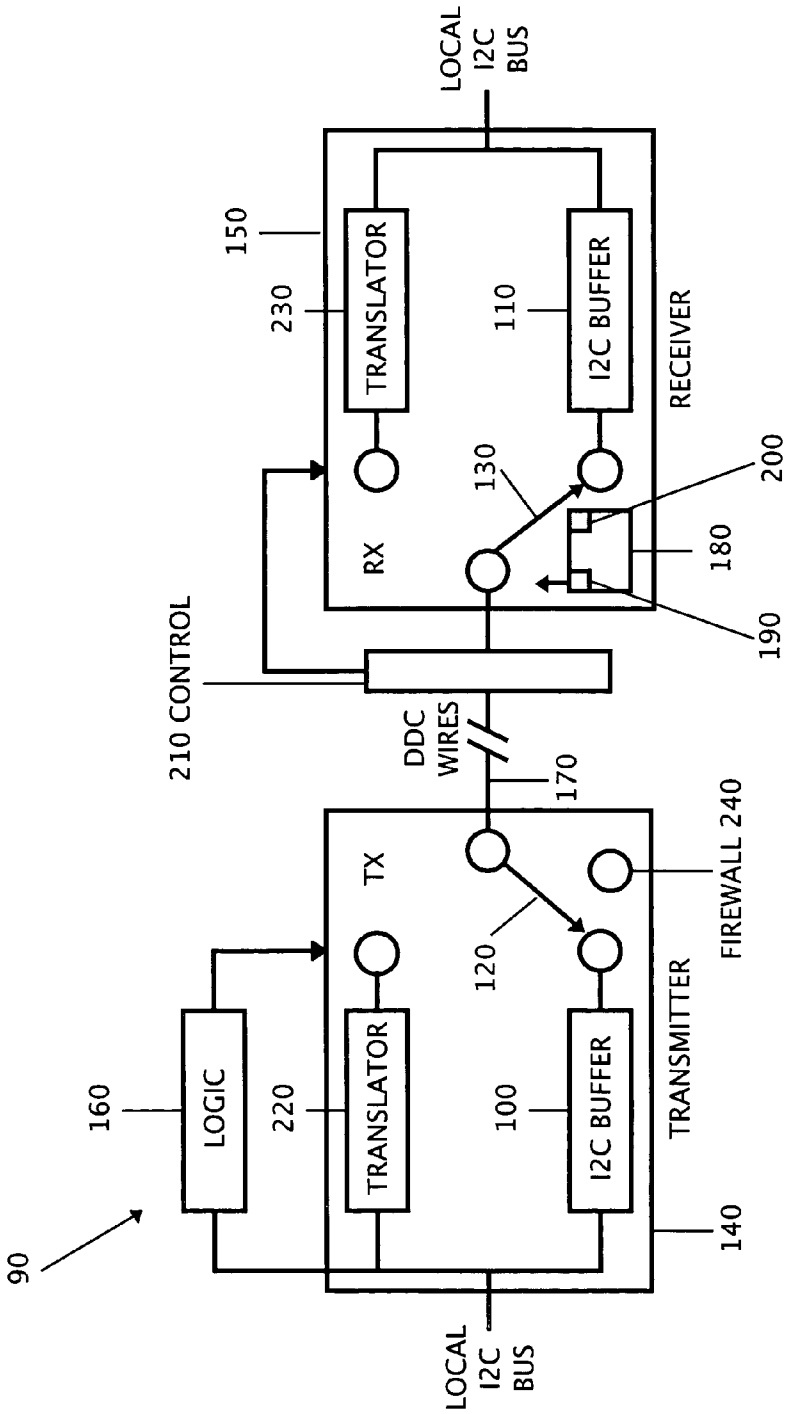
90
160
LOGIC
220
TRANSLATOR
TX
100
I2C BUFFER
120
TRANSMITTER
140
FIREWALL 240
LOCAL I2C BUS
170
DDC WIRES
210 CONTROL
150
230
TRANSLATOR
RX
110
I2C BUFFER
130
RECEIVER
200
180
190
LOCAL I2C BUS

FIG. 2A

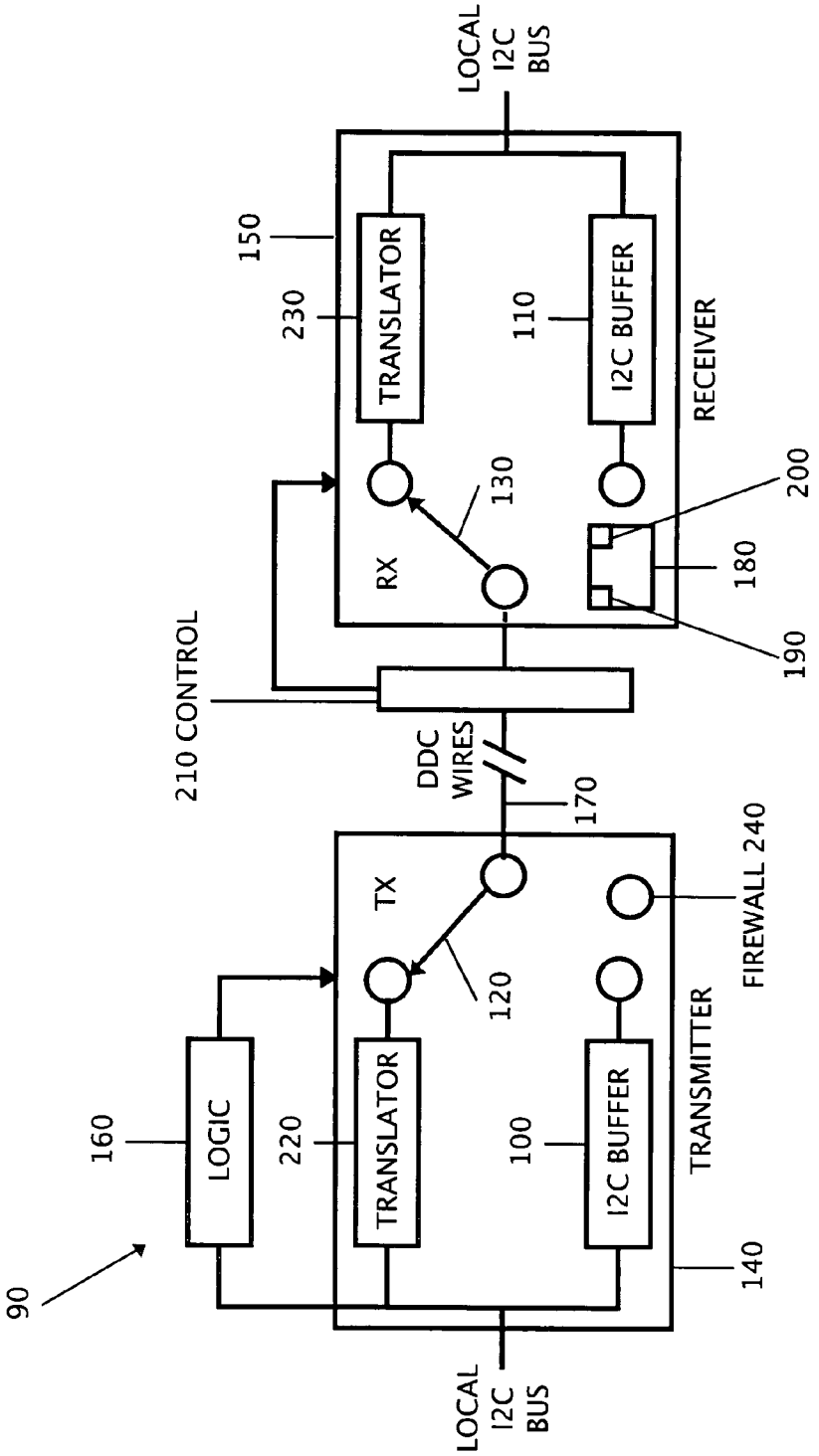
90
160
LOGIC
220
TRANSLATOR
TX
120
100
I2C BUFFER
TRANSMITTER
140
LOCAL I2C BUS
FIREWALL 240
170
DDC WIRES
210 CONTROL
RX
130
230
TRANSLATOR
150
110
I2C BUFFER
RECEIVER
LOCAL I2C BUS
190
180
200

FIG. 2B

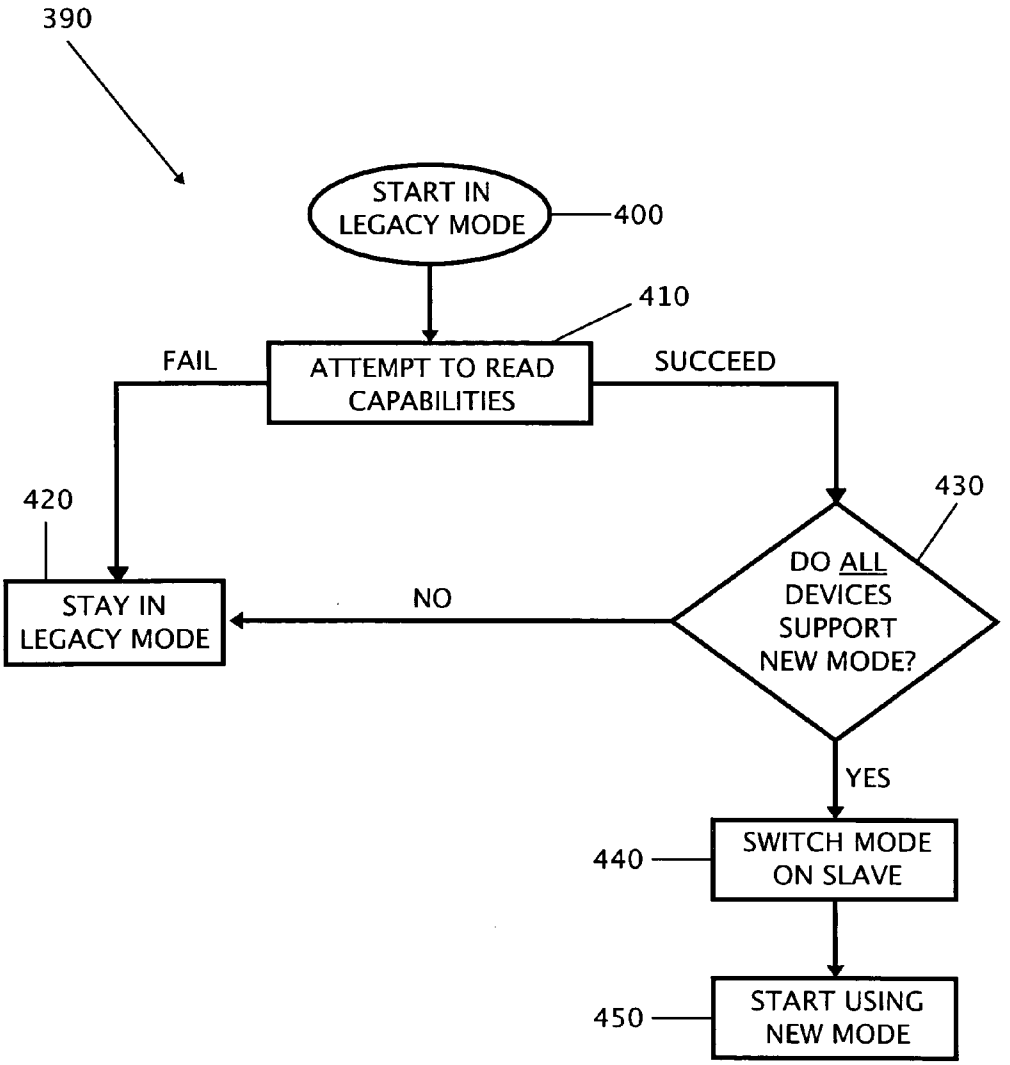

FIG. 3A
"NEGOTIATE AND SET"

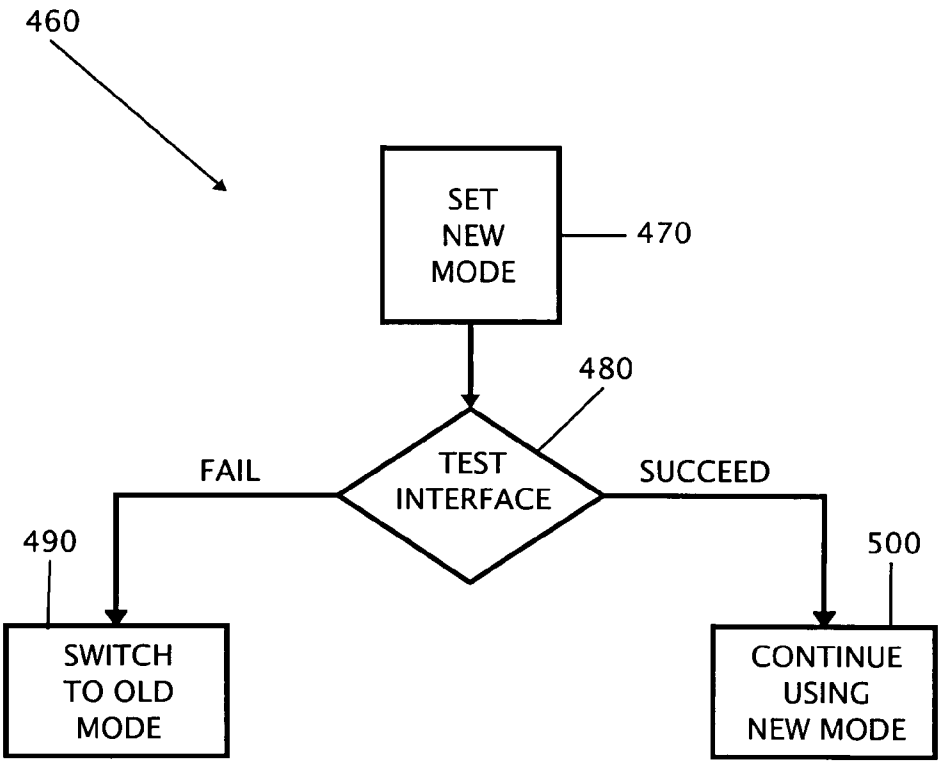

FIG. 3B
"SET AND TEST"

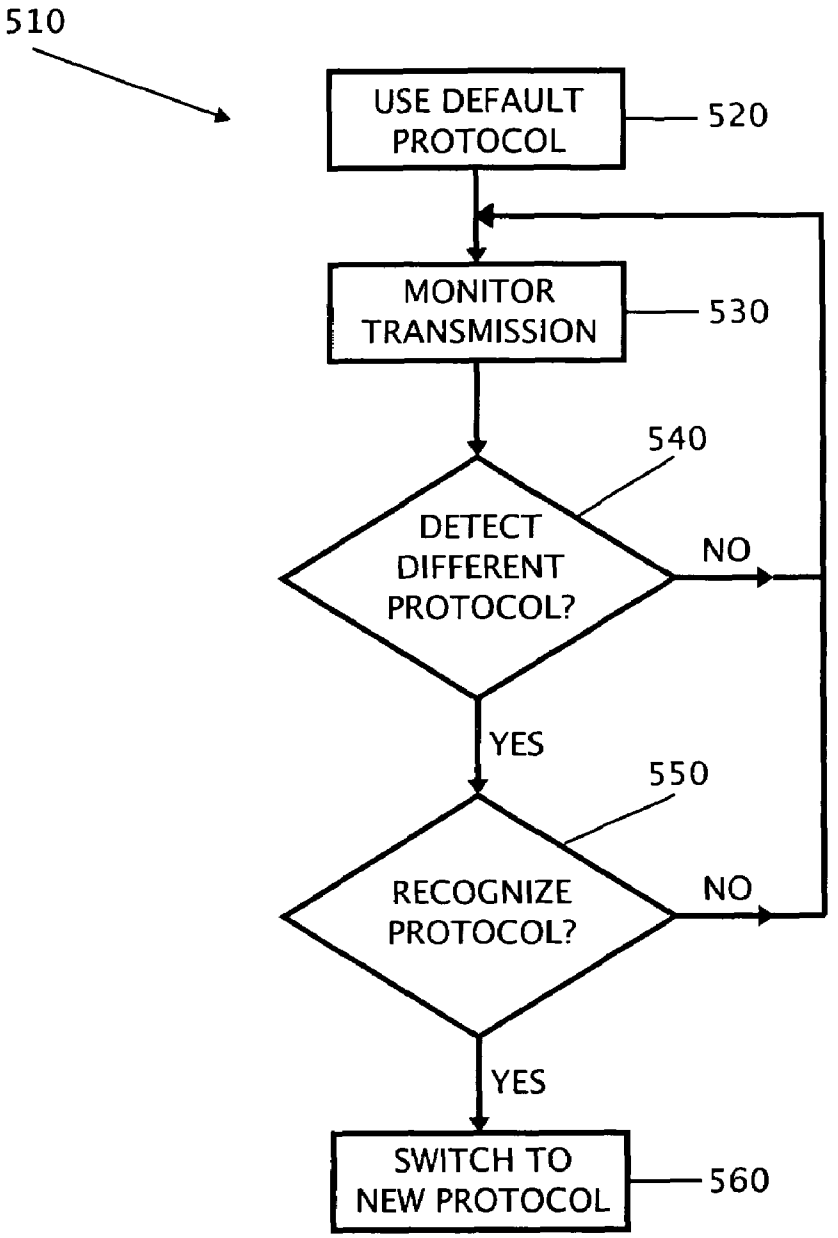
510
USE DEFAULT PROTOCOL
520
MONITOR TRANSMISSION
530
540
DETECT DIFFERENT PROTOCOL?
NO
YES
550
RECOGNIZE PROTOCOL?
NO
YES
SWITCH TO NEW PROTOCOL
560

FIG. 3C

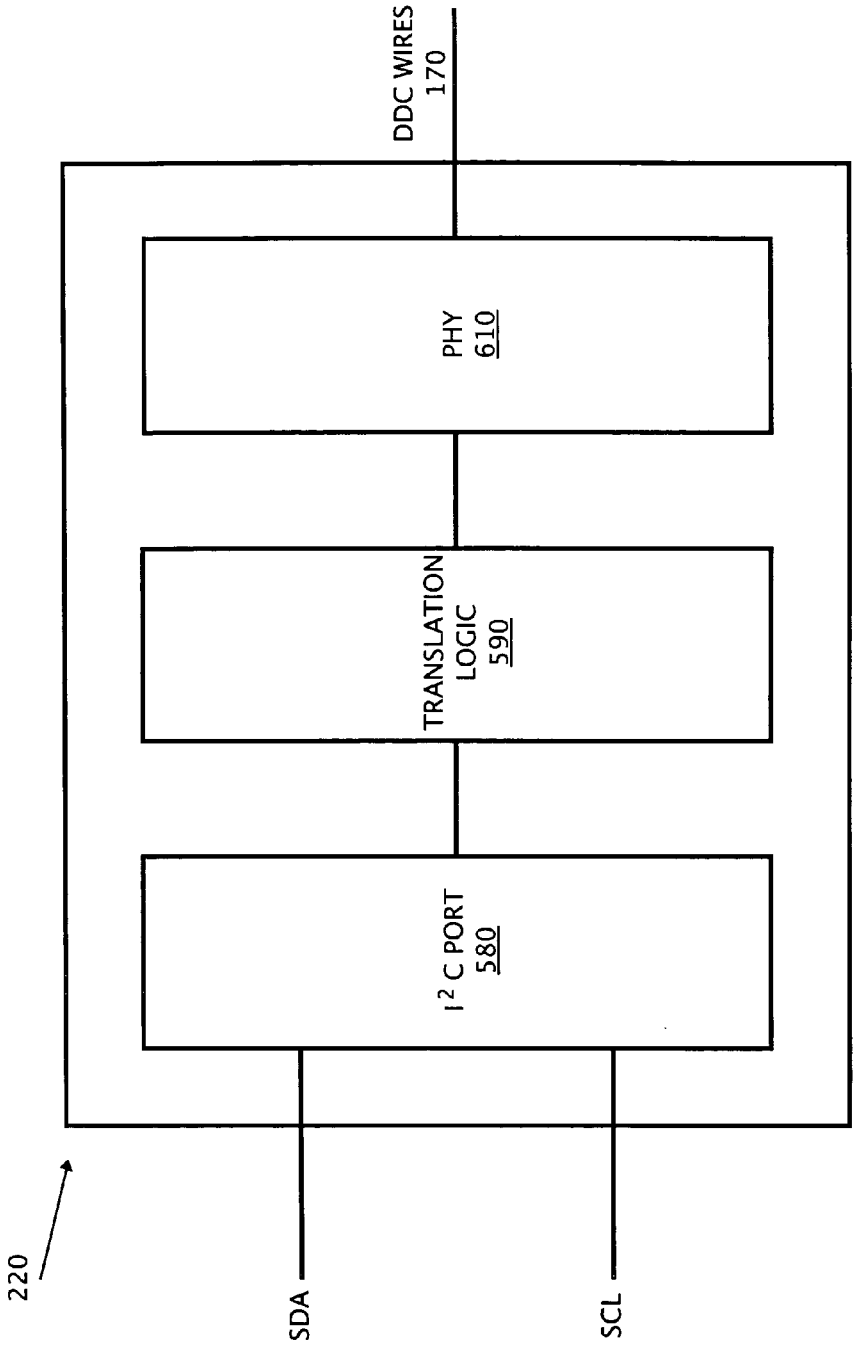
220
SDA
SCL
I2C PORT
580
TRANSLATION
LOGIC
590
PHY
610
DDC WIRES
170

FIG. 4

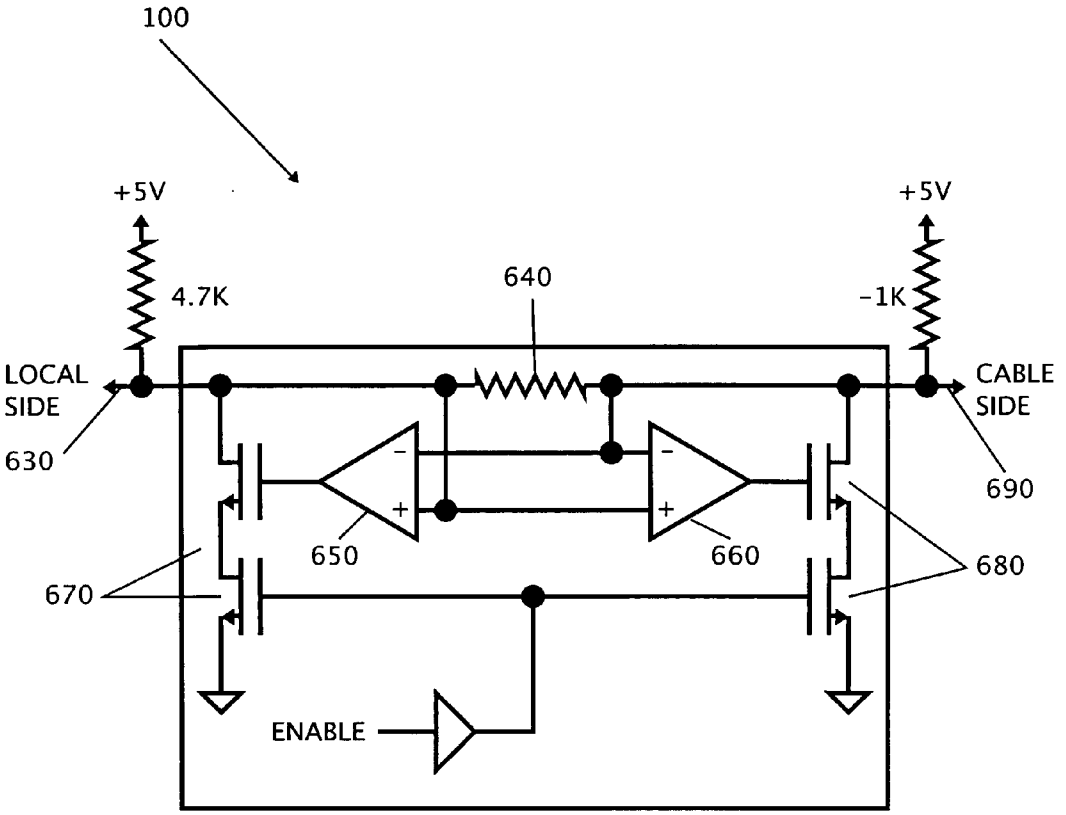
100
+5V
4.7K
640
+5V
-1K
LOCAL
SIDE
630
CABLE
SIDE
690
650
660
670
680
ENABLE

FIG. 5

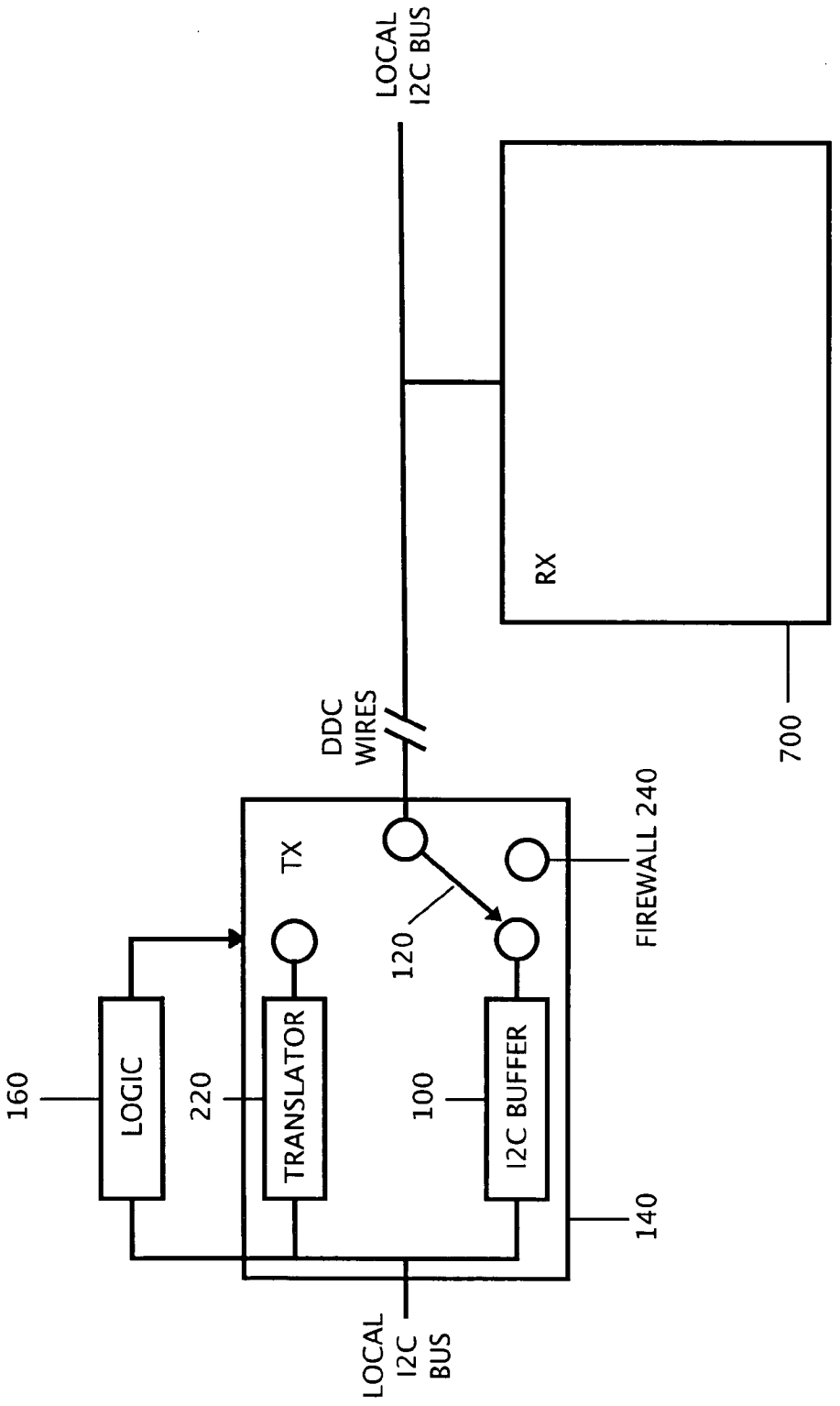
160
LOGIC
220
TRANSLATOR
TX
100
I2C BUFFER
120
DDC WIRES
LOCAL I2C BUS
LOCAL I2C BUS
RX
700
FIREWALL 240
140

FIG. 6

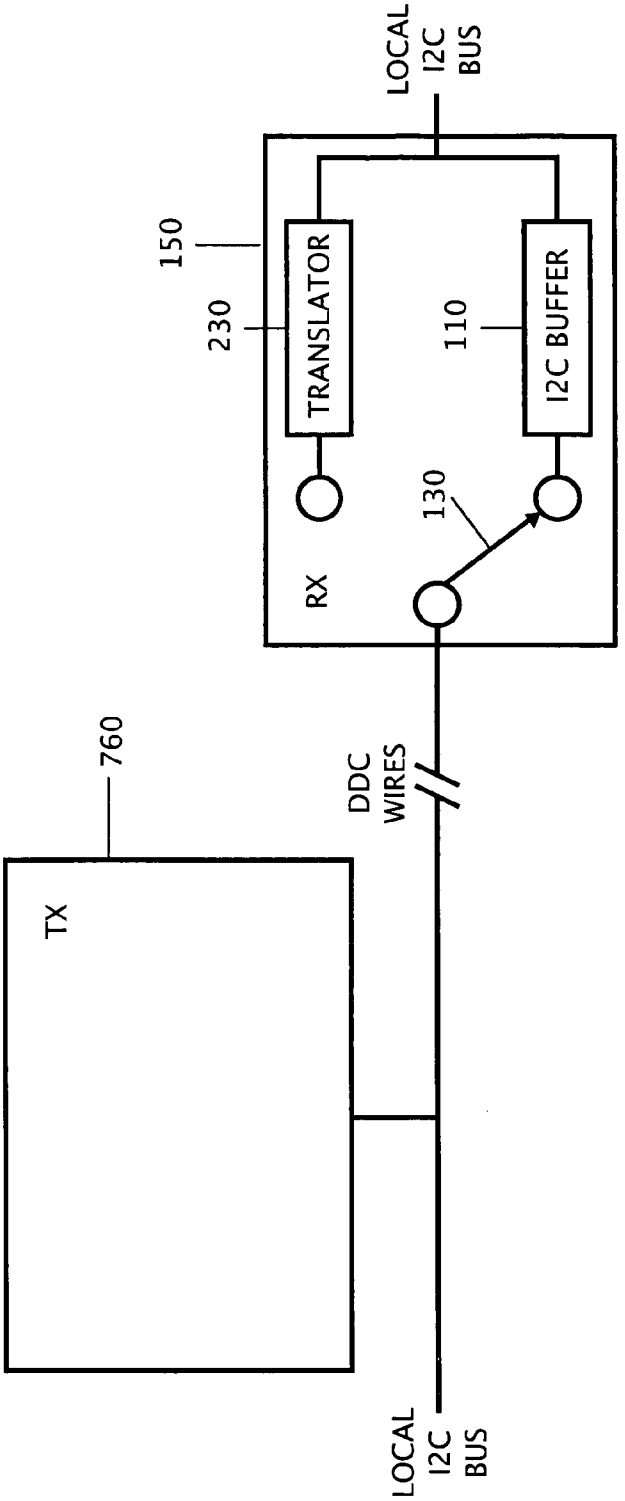
LOCAL I2C BUS
150
230
TRANSLATOR
110
I2C BUFFER
130
RX
760
DDC WIRES
TX
LOCAL I2C BUS

FIG. 7

METHOD AND APPARATUS FOR A TWO-WIRE SERIAL COMMAND BUS INTERFACE

FIELD OF THE INVENTION

The present invention relates generally to digital communication between a transmitter and a receiver, and more particularly to communication between a video source device and a video display device.

BACKGROUND OF THE INVENTION

FIG. **1** illustrates a prior art system **10** of how a transmitter **20** and a receiver **30** communicate. The transmitter **20** can be, for example, a computer, a DVD player or other video source and the receiver **30** can be a monitor or a television. Communication between the transmitter **20** and the receiver **30** is typically achieved via the DVI (digital visual interface) **40** which is a single interface that contains various lines bundled into one cable. An HDMI link (high definition multi-media interface) or some other variant can also achieve communication between the transmitter **20** and the receiver **30**. Some of these lines include a hot plug signal, a power line, TMDS® (transition minimized differential signaling) **50** (typically used for carrying video data) and a DDC (display data channel) bus **60**.

The DDC bus **60** is a serial 2-wire interface that has one data line and one clock line. This serial protocol is believed to have been developed, at least in part by the Philips Corporation of Holland. Philips part #PCA9515 is an integrated circuit which implements the so-called I^2C bus. One of the primary purposes of the DDC bus **60**, when used as an I^2C bus, is to read an EDID PROM **70** (extended data interface device programmable read only memory) which includes data concerning the receiver **30**. The DDC bus **60** can also be used for data transfer with HDCP **80** (high-bandwidth digital content protection), which is an encryption device that provides content protection.

Several problems are associated with the DDC bus **60** that make it undesirable for certain applications. One problem is that it can not be of an extended physical length due to electrical issues such as overwhelmed capacitive load budgets and transmission line effects that degrade signal timing parameters. Another problem is that its data carrying capacity is limited to about 400 kilobits/second. The data on the DDC bus **60** can be easily eavesdropped and even manipulated and since it may connect to several devices in the transmitter **20**, security is also an issue. Finally, any attempt to solve these problems would need to take into consideration legacy issues for the purpose of backward compatibility. That is, the DDC bus is very widely used and any attempt to improve upon it would need to be compatible with transmitters and receivers that use the standard DDC bus interface.

Accordingly, what is needed is a method and apparatus for a DDC compatible two-wire serial command interface which allows for high speed data transmission, extended cable length, data security and still provide backward compatibility.

SUMMARY OF THE INVENTION

The present invention provides a system and method for intelligently re-mapping a two-wire interface between a transmitter and a receiver. The re-mapping allows for high speed data transmission and data security and is not con-

strained by length issues. Additionally, a transmitter-side firewall prevents unauthorized access.

A method for bi-directional transmission of data between a source and a sink over a two-wire interface, in accordance with the present invention, includes re-mapping a data signal and a clock signal from a first local bus on the source into a different protocol signal. Transmitting the different protocol signal from the source to the sink over the two-wire interface. Re-mapping the different protocol signal back into the data signal and the clock signal for use on a second local bus on the sink. Re-mapping the data signal and the clock signal from the second local bus into the different protocol signal; and transmitting the different protocol signal from the sink to the source over the two-wire interface.

A system for bi-directional transmission of data between a source and sink over a two-wire interface, in accordance with the present invention, includes a first translator that is responsive to and operative to develop a first local bus signal and is responsive to and operative to develop a different protocol signal. A first buffer is responsive to and operative to develop the first local bus signal and is responsive to and operative to develop a buffered data signal and a buffered clock signal. Logic is responsive to the first local bus signal and operative to controlling a first switch coupled to the two-wire interface wherein the switch connects to the first translator, the first buffer or a firewall setting. A second translator is responsive to and operative to develop the different protocol signal and is responsive to and operative to develop a second local bus signal when the first switch is connected to the first translator and a second switch coupled to the two-wire interface is connected to the second translator. A second buffer is responsive to and operative to develop the buffered data signal and the buffered clock signal and is responsive to and operative to develop the second local bus signal when the first switch is connected to the first buffer and the second switch coupled to the two-wire interface is connected to the second buffer.

A method for buffering data between a source and a sink over a two-wire interface, in accordance with yet another aspect of the present invention, includes buffering on the source a data signal and a clock signal received from a local bus on the source. Transmitting, from the source to the sink, the data and clock signals over the two-wire interface. Buffering at the sink the data and clock signals. Re-transmitting from the sink the data and clock signals over the two-wire interface to the source as needed; and logic on the source that performs a firewall function by selectively closing access to the two-wire interface.

A system for buffering data between a source and a sink over a two-wire interface, in accordance with the present invention, includes a first buffer responsive to a first local bus signal and responsive to and operative to develop a buffered data signal and a buffered clock signal. A logic is responsive to the first local bus signal and operative to controlling a first switch coupled to the two-wire interface wherein the switch connects to the first buffer or a firewall setting. A second buffer is responsive to and operative to develop the buffered data signal and the buffered clock signal and is responsive to and operative to develop a second local bus signal when the first switch is connected to the first buffer and a second switch coupled to the two-wire interface is connected to the second buffer.

A system for buffering data between a source and a sink over a two-wire interface, in accordance with the present invention, includes a first buffer that is responsive to a first local bus signal and operative to develop a buffered data signal and a buffered clock signal. A logic is responsive to

the first local bus and operative to controlling a first switch coupled to the two-wire interface wherein the switch connects to the first buffer or a firewall setting. The sink is coupled to the two-wire interface and is responsive to the buffered data signal and the buffered clock signal when the switch is connected to the first buffer.

An advantage of the present invention is that it is fully compatible with legacy hardware. It intelligently detects whether a device can support new or old protocols and adjusts accordingly. Additionally, even in the absence of new protocol compatibility, it improves upon legacy systems by increasing available cable length and also by providing a transmitter-side firewall. Also, security is improved and new protocols can be designed to be more readily sent through a receiver to another device or another level, for example, though a repeater coupled to two receivers.

These and other advantages of the present invention will become apparent to those skilled in the art after reading the following descriptions and studying the various figures of the drawings.

BRIEF DESCRIPTION OF THE DRAWINGS

FIG. **1** illustrates a prior art system of how a transmitter and a receiver communicate.

FIG. **2**A illustrates a transmitter and receiver communication system via buffers in accordance with the present invention.

FIG. **2**B illustrates a transmitter and receiver communication system via translators in accordance with the present invention.

FIG. **3**A illustrates a flow diagram for a "negotiate and set" process in accordance with the present invention.

FIG. **3**B illustrates a flow diagram for a "set and test" process in accordance with the present invention.

FIG. **3**C illustrates a flow diagram for a "snoop and test" process in accordance with the present invention.

FIG. **4** illustrates a translator in accordance with the present invention.

FIG. **5** illustrates a general implementation of a buffer for an I^2C bus in accordance with the present invention.

FIG. **6** illustrates a legacy mode of operation in relation to the receiver in accordance with the present invention.

FIG. **7** illustrates a legacy mode of operation in relation to the transmitter in accordance with the present invention.

DETAILED DESCRIPTION OF THE INVENTION

FIG. **1** was described with reference to the prior art. FIG. **2**A illustrates a transmitter and receiver communication system **90** via buffers **100** and **110** in accordance with the present invention. In the context of the present invention, it should be understood that the terms "transmitter", "host" and "source" can be used interchangeably and refers to devices capable of sending out signals that can control some other device as well as receive signals from that device. Also, it should be understood that "slave", "receiver" and "sink" can also be used interchangeably and refers to a device that is controlled by a transmitter via signals and can send out signals to the transmitter.

FIG. **2**A depicts a default mode in that, at system startup, switches **120** and **130** are connected to I^2C buses **100** and **110**, located on transmitter **140** and receiver **150** respectively. Other default modes are also available. Logic **160** sends a signal over DDC wires **170** and reads register **180**. Contained within register **180**, there is a control bit **190** and a status bit **200** that contain information on what the receiver **150** is capable of. Depending on that information, logic **160** will direct control **210** to keep switches **120** and **130** in their default positions or switch to translators **220** and **230**. This is one example of how the proper mode to use is determined. This example and others will be fully explained subsequently.

If switches **120** and **130** are left in their default modes, improvements are still evident over prior art systems due to the presence of the buffers **100** and **110** and firewall setting **240**. By buffering, the length of the DDC wires can be extended. On the transmitter **140**, switch **120** can be placed at firewall setting **240** by logic **160**. When firewall setting **240** is selected, access to the transmitter **140** via DDC wires **170** is cut off. Advantageously, this provides greater security on the transmitter **140** since access via the DDC wires **170** can be controlled and is no longer in a perpetually connected state. Additionally, in the context of the present invention, it should be understood that the terms "protocol" and "mode" can be used interchangeably and refer to a specified format of data communication or data transfer.

FIG. **2**B illustrates a transmitter and receiver communication system **90** via translators **220** and **230** in accordance with the present invention. Switches **120** and **130**, located on transmitter **140** and receiver **150** respectively, are connected to translators **220** and **230**. In this particular example, logic **160** directed control **210** to connect switches **120** and **130** to translators **220** and **230** due to information contained in register **180**. Specifically, control bit **190** and status bit **200** indicated that the receiver is capable of using the new protocol. This is one example of how the proper mode to use is determined, and this and other examples will be more fully explained subsequently. When the new protocol can be employed, more efficient signaling can be used to improve transmission speed, extend wire length and improve security by encryption. Some example signaling techniques include well-known TCP/IP, differential signaling, ethernet and current loop. Any of these signaling techniques can additionally be encrypted. Translator **220** converts the I^2C signal into the new protocol and transmits it over DDC wires **170**. Translator **230** then converts the new protocol back into an I^2C signal for use on the receiver **150**. Since the pre-existing DDC wires **170** are used to transmit the old as well as new protocols, compatibility with legacy hardware is achieved. Additionally, a firewall setting **240** is available on transmitter **140** and operates in the same manner as firewall setting **240** of FIG. **2**A.

It should be understood that the receiver **150** could also send information to the transmitter **140**. It will also be appreciated that, in some circumstances, the receiver **150** can initiate communications with the transmitter.

In an additional embodiment, both default and new modes (as shown in FIGS. **2**A and **2**B) can be used simultaneously in a manner that is similar in concept to DSL (digital subscriber line). In DSL, a high speed Internet connection is transmitted on the same wire or sets of wires as an old-style telephone signal by separating the two signals in the frequency spectrum. The same technique can be used for the present invention. The switch **120**, in this case, would act as a mixer and blend the two signals for transmission on the DDC wires **170**. Switch **130** would then act as a separator and on the receiving side. Besides a frequency spectrum separation of the signals, a voltage separating technique could also be used.

FIG. **3**A illustrates a flow diagram for a "negotiate and set" process **390** in accordance with the present invention. The negotiate and set process **390** is one example of how

logic **160** and logic **320** function. In an operation **400**, the legacy mode or old style of communication over a set of DDC wires is used. At operation **410**, the capabilities of the receiver (for example receivers **150** or **310**) are determined. This is accomplished by reading bit registers **180** and **340** or by reading an EDID PROM **70**. It can also be accomplished if the operation fails which is an indication that the receiver does not have the new mode capabilities defined. If it is determined that the receivers **150** or **310** can only understand the legacy mode protocol, then the legacy mode will be used at operation **420**. If it is determined that some devices located on the transmitter can use the new mode, the rest of the devices are polled at operation **430** determine if they all can do so. If not, control is passed to operation **420** and the legacy mode is used. Conversely, if all the devices can support the new mode, then the mode of operation at the receiver will be switched at operation **440** and the new mode will then be used via operation **450**.

FIG. **3**B illustrates a flow diagram for a "set and test" process **460** in accordance with the present invention. The set and test process **460** is another example of how logic **160** and logic **320** function. At an operation **470**, the new mode of communication is set. At operation **480**, the receiver/interface is tested to see if the new mode is understandable. If the test fails, the old mode of communication is used via operation **490**. If the test succeeds, the new mode will be used for communications via operation **500**.

FIG. **3**C illustrates a flow diagram for a "snoop and test" process **510** in accordance with the present invention. The snoop and test process **510** is yet another example of how logics **160** and **320** can function. At operation **520**, the default protocol is used. At an operation **530**, the bus is monitored for a response in any format other than the default protocols. Once a transmission is received, it is determined if it differs from the default protocols, at operation **540**. If a different protocol is not detected at operation **540**, then the transmission will continue to be monitored via operation **530**. If a different protocol is detected, then it is decided if the different protocol is recognizable at operation **550**. If it isn't, then the transmission will continue to be monitored via operation **530**. If it is recognized, then the new protocol will be used via operation **560**.

FIG. **4** illustrates a translator **220** in accordance with the present invention. Translator **220** is also a mirror image of translator **230**. SDA (serial data line) and SCL (serial clock line) are the two components of the I^2C bus that are connected to the I^2C port **580** where SDA and SCL are converted into internal blocks of data. The data is then translated at the translation logic block **590** and connected to the DDC wires **600** via the PHY (physical interface) **610**. Some examples of translation logic are ethernet, TCP/IP, current loop, differential signaling and cryptographic encryption/decryption logic.

FIG. **5** illustrates an implementation of a buffer for one line of an I^2C bus **100** in accordance with the present invention. Two of these circuits are needed to fully buffer an I^2C bus—one for SCL and one for SDA. Buffer **100** is a mirror image of buffer **110**. The buffer functions in a way such that data can flow in either direction simultaneously. In order to control the flow of data, a switch is usually necessary but can be difficult to implement. Another way of doing this is to sense the direction a current is flowing and then help it flow in the correct direction. FIG. **5** achieves this function. When a signal at **630** is flowing left to right, node **630** is pulled towards a zero voltage. A positive voltage will then result across the resistor **640** which will in turn be sensed by operational amplifiers **650** and **660**. Operational amplifier **650** leaves its output transistors **670** in an off-state and operational amplifier **660** turns on its output transistors which in turn brings a signal at **690** down to about a zero voltage as well. If a signal was flowing right to left, an opposite process will occur.

FIG. **6** illustrates a legacy mode of operation in relation to the receiver in accordance with the present invention. The receiver **700** does not have a buffer **100** or a translator **220** as shown on the transmitter **140**. In this situation, the switch **120** is kept connected to the buffer **100** by the logic **160**, as the receiver can not support the new style protocols. Selection of a firewall **240** on the transmitter **140** is still possible, however.

FIG. **7** illustrates a legacy mode of operation in relation to the transmitter in accordance with the present invention. The transmitter **760** does not have a buffer **110** or a translator **230** as shown on the receiver **150**. In this situation, the switch **130** is kept connected to the buffer **110** as defined in the default mode.

The present invention provides a method and apparatus for a two-wire serial command bus interface. The re-mapping allows for high-speed data transmission, data security and is not constrained by length issues. Additionally, a transmitter-side firewall prevents unauthorized access.

An advantage of the present invention is that it is fully compatible with legacy hardware. It intelligently detects whether a device can support new or old protocols and adjusts accordingly. Additionally, even in the absence of new protocol compatibility, it improves upon legacy systems by increasing available cable length and also by providing a transmitter-side firewall.

While this invention has been described in terms certain preferred embodiments, it will be appreciated by those skilled in the art that certain modifications, permutations and equivalents thereof are within the inventive scope of the present invention. It is therefore intended that the following appended claims include all such modifications, permutations and equivalents as fall within the true spirit and scope of the present invention.

What is claimed is:

1. A method for bi-directional transmission of data between a source and a sink over a two-wire interface comprising:

re-mapping a data signal and a clock signal from a first local bus on the source into a different protocol signal;

transmitting the different protocol signal from the source to the sink over the two-wire interface;

re-mapping the different protocol signal back into the data signal and the clock signal for use on a second local bus on the sink;

re-mapping the data signal and the clock signal from the second local bus into the different protocol signal; and

transmitting the different protocol signal from the sink to the source over the two-wire interface.

2. The method as recited in claim **1** wherein the sink initiates transmission of data to the source.

3. The method as recited in claim **1** or **2** further comprising a logic that determines if the source and the sink are capable of re-mapping the different protocol signal into the data signal and the clock signal.

4. The method as recited in claim **3** wherein the logic directs the source to transmit the data signal and the clock signal over the two-wire interface if the sink is incapable of re-mapping the different protocol signal into the data signal and the clock signal.

5. The method as recited in claim **3** wherein the logic directs the sink to transmit the data signal and the clock

signal over the two-wire interface if the source is incapable of re-mapping the different protocol signal into the data signal and the clock signal.

6. The method as recited in claim **3** wherein the logic directs the source to transmit the different protocol signal over the two-wire interface if the sink is capable of re-mapping the different protocol signal into the data signal and the clock signal.

7. The method as recited in claim **3** wherein the logic directs the sink to transmit the different protocol signal over the two-wire interface if the source is capable of re-mapping the different protocol signal into the data signal and the clock signal.

8. The method as recited in claim **3** further comprising a set of control registers located on the sink wherein the set of control registers define a list of devices and an associated list of capabilities.

9. The method as recited in claim **8** wherein the logic determines if the sink is capable of re-mapping the different protocol signal into the data signal and the clock signal by:

directing the source to transmit the data signal and the clock signal over the two-wire interface to the sink;

soliciting the set of control registers for the list of devices and the associated list of capabilities; and

directing the source to transmit the different protocol signal if every device from the list of devices is capable of re-mapping the different protocol signal.

10. The method as recited in claim **9** wherein the logic directs the source to transmit the data signal and the clock signal if at least one device from the list of devices is incapable of re-mapping the different protocol signal.

11. The method as recited in claim **8** wherein the logic determines if the source is capable of re-mapping the different protocol signal into the data signal and the clock signal by:

directing the sink to transmit the data signal and the clock signal over the two-wire interface to the source;

soliciting the set of control registers for the list of devices and the associated list of capabilities; and

directing the sink to transmit the different protocol signal if every device from the list of devices is capable of re-mapping the different protocol signal.

12. The method as recited in claim **11** wherein the logic directs the sink to transmit the data signal and the clock signal if at least one device from the list of devices is incapable of re-mapping the different protocol signal.

13. The method as recited in claim **3** wherein the logic determines if the sink is capable of processing the second format data signal and the second format clock signal by:

directing the source to transmit the different protocol signal over the two-wire interface to the sink; and

directing the source to continue transmitting the different protocol signal if the sink transmits the different protocol signal over the two-wire interface back to the source.

14. The method as recited in claim **13** wherein the logic directs the source to transmit the data signal and the clock signal if the sink does not transmit the different protocol signal over the 2-wire interface back to the source.

15. The method as recited in claim **3** wherein the logic determines if the source is capable of processing the second format data signal and the second format clock signal by:

directing the sink to transmit the different protocol signal over the two-wire interface to the source; and

directing the sink to continue transmitting the different protocol signal if the source transmits the different protocol signal over the two-wire interface back to the sink.

16. The method as recited in claim **15** wherein the logic directs the sink to transmit the data signal and the clock signal if the source does not transmit the different protocol signal over the 2-wire interface back to the sink.

17. The method as recited in claim **2** further comprising a logic that adaptively determines a type of different protocol signal that the sink is capable of processing.

18. The method as recited in claim **17** wherein the logic adaptively determines the type of different protocol signal by:

directing the source to transmit a default protocol signal over the two-wire interface to the sink;

monitoring a two-wire interface for a responding protocol signal;

receiving the responding protocol signal over the two-wire interface from the sink;

determining if the default protocol signal and the responding protocol signal differs; and

directing the source to transmit the responding protocol signal over the two-wire interface to the sink if the default protocol signal and the responding protocol signal differ and if the logic recognizes the responding protocol signal.

19. The method as recited in claim **18** wherein the logic directs the source to transmit the default protocol signal if the default protocol signal and the responding protocol signal do not differ.

20. The method as recited in claim **18** wherein the logic monitors for a response from the sink if the default protocol signal and the responding protocol signal differs and if the logic does not recognize the responding protocol signal.

21. The method as recited in claim **2** further comprising a logic that adaptively determines a type of different protocol signal that the source is capable of processing.

22. The method as recited in claim **21** wherein the logic adaptively determines the type of different protocol signal by:

directing the sink to transmit a default protocol signal over the two-wire interface to the source;

monitoring a two-wire interface for a responding protocol signal;

receiving the responding protocol signal over the two-wire interface from the source;

determining if the default protocol signal and the responding protocol signal differs; and

directing the sink to transmit the responding protocol signal over the two-wire interface to the source if the default protocol signal and the responding protocol signal differ and if the logic recognizes the responding protocol signal.

23. The method as recited in claim **22** wherein the logic directs the sink to transmit the default protocol signal if the default protocol signal and the responding protocol signal do not differ.

24. The method as recited in claim **22** wherein the logic monitors for a response from the source if the default protocol signal and the responding protocol signal differs and if the logic does not recognize the responding protocol signal.

25. The method as recited in claim **2** wherein the logic performs a firewall function by closing access to the two-wire interface.

26. The method as recited in claim **2** wherein the source and the sink both further comprise a buffer.

27. The method as recited in claim **26** wherein the logic performs a firewall function by closing access to the two-wire interface.

28. The method as recited in claim **1** wherein the source is a computer and the sink is a monitor.

29. The method as recited in claim **1** wherein the source is a video source and the sink is a monitor.

30. The method as recited in claim **29** wherein the video source is a DVD player.

31. The method as recited in claim **29** wherein the video source is a video cassette recorder.

32. The method as recited in claims **28**, **29**, **30** or **31** wherein the monitor is a television.

33. The method as recited in claim **1** wherein the different protocol signal is defined in an ethernet protocol.

34. The method as recited in claim **1** wherein the different protocol signal is defined in a TCP/IP protocol.

35. The method as recited in claim **1** wherein the different protocol signal is defined in an RS-232 protocol.

36. The method as recited in claim **1** wherein the different protocol signal is defined in a current loop protocol.

37. The method as recited in claims **1** or **2** wherein the data signal, the clock signal and the different protocol signal are transmitted over the two-wire interface simultaneously.

* * * * *

EXHIBIT 5

US006584443B1

(12) **United States Patent**
Kawamura et al.

(10) **Patent No.: US 6,584,443 B1**
(45) **Date of Patent: Jun. 24, 2003**

(54) **APPARATUS AND METHOD FOR AUDIO DATA/AUDIO-RELATED INFORMATION TRANSFER**

(75) Inventors: **Akihisa Kawamura**, Osaka (JP); **Naoki Ejima**, Osaka (JP); **Masatoshi Shimbo**, Osaka (JP)

(73) Assignee: **Matsushita Electric Industrial Co., Ltd.**, Osaka (JP)

(*) Notice: Subject to any disclaimer, the term of this patent is extended or adjusted under 35 U.S.C. 154(b) by 0 days.

(21) Appl. No.: **09/553,590**

(22) Filed: **Apr. 20, 2000**

(30) **Foreign Application Priority Data**

Apr. 23, 1999 (JP) 11-115885
Apr. 4, 2000 (JP) 2000-102883

(51) **Int. Cl.**[7] **G10L 19/00**
(52) **U.S. Cl.** **704/500**; 704/501; 704/502; 704/503; 704/504
(58) **Field of Search** 704/200, 500, 704/501, 502, 503, 504; 375/240

(56) **References Cited**

U.S. PATENT DOCUMENTS

5,228,059 A 7/1993 Takegahara et al. 375/17
6,175,592 B1 * 1/2001 Kim et al. 375/240

FOREIGN PATENT DOCUMENTS

CN 1084306 3/1994
CN 1205502 1/1999
JP 11331218 11/1999

OTHER PUBLICATIONS

"Digital Audio Interface" from the International Standard, CEI IEC 958, First Edition 1989–03.

* cited by examiner

Primary Examiner—Susan McFadden
(74) *Attorney, Agent, or Firm*—Snell & Wilmer, LLP

(57) **ABSTRACT**

A method for transferring audio data and audio-related information includes generating second audio data from first audio data, transmitting second audio data and audio-related information associated with the second audio data, and receiving the second audio data and audio-related information which includes information on a sampling frequency of the first audio data.

27 Claims, 6 Drawing Sheets

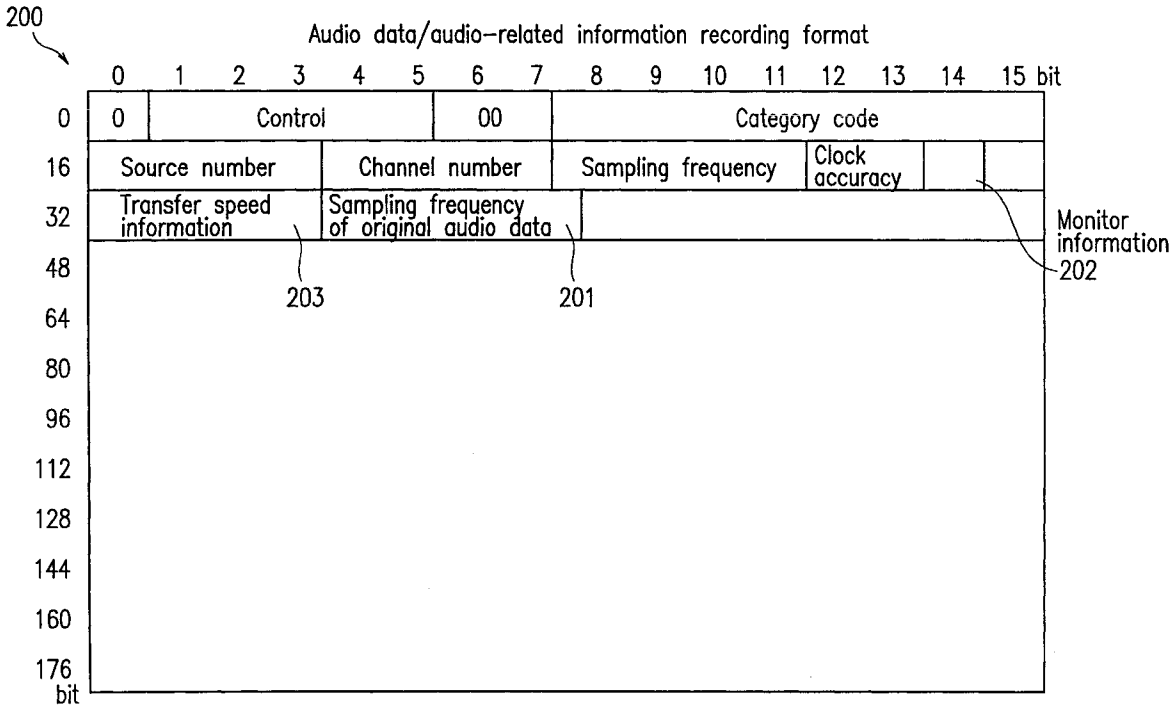

FIG. 1

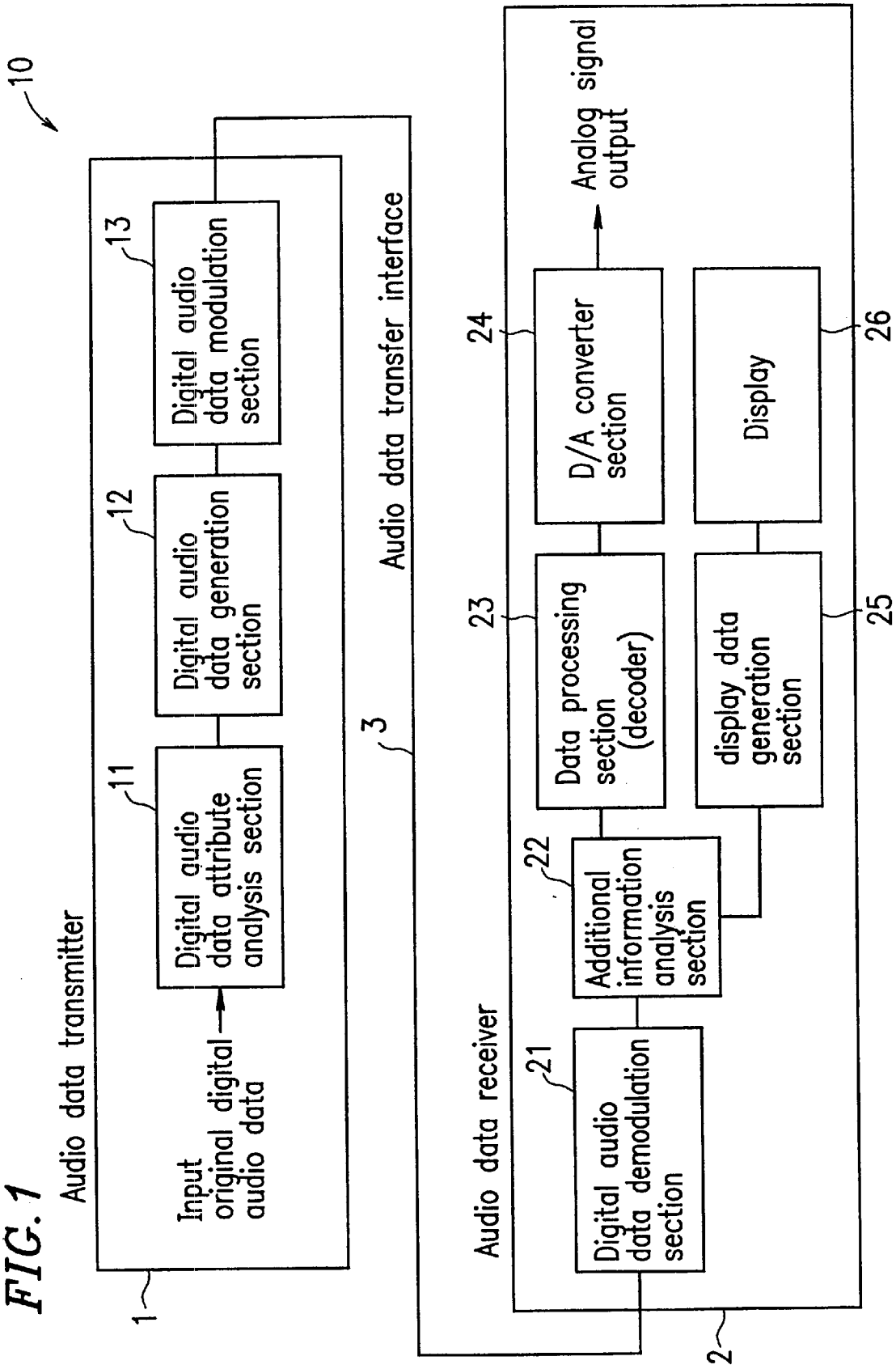
10
Audio data transmitter
Input original digital audio data
Digital audio data attribute analysis section
Digital audio data generation section
Digital audio data modulation section
11
12
13
1
3
Audio data transfer interface
Audio data receiver
Digital audio data demodulation section
Additional information analysis section
Data processing section (decoder)
D/A converter section
Analog signal output
display data generation section
Display
21
22
23
24
25
26
2

FIG. 2

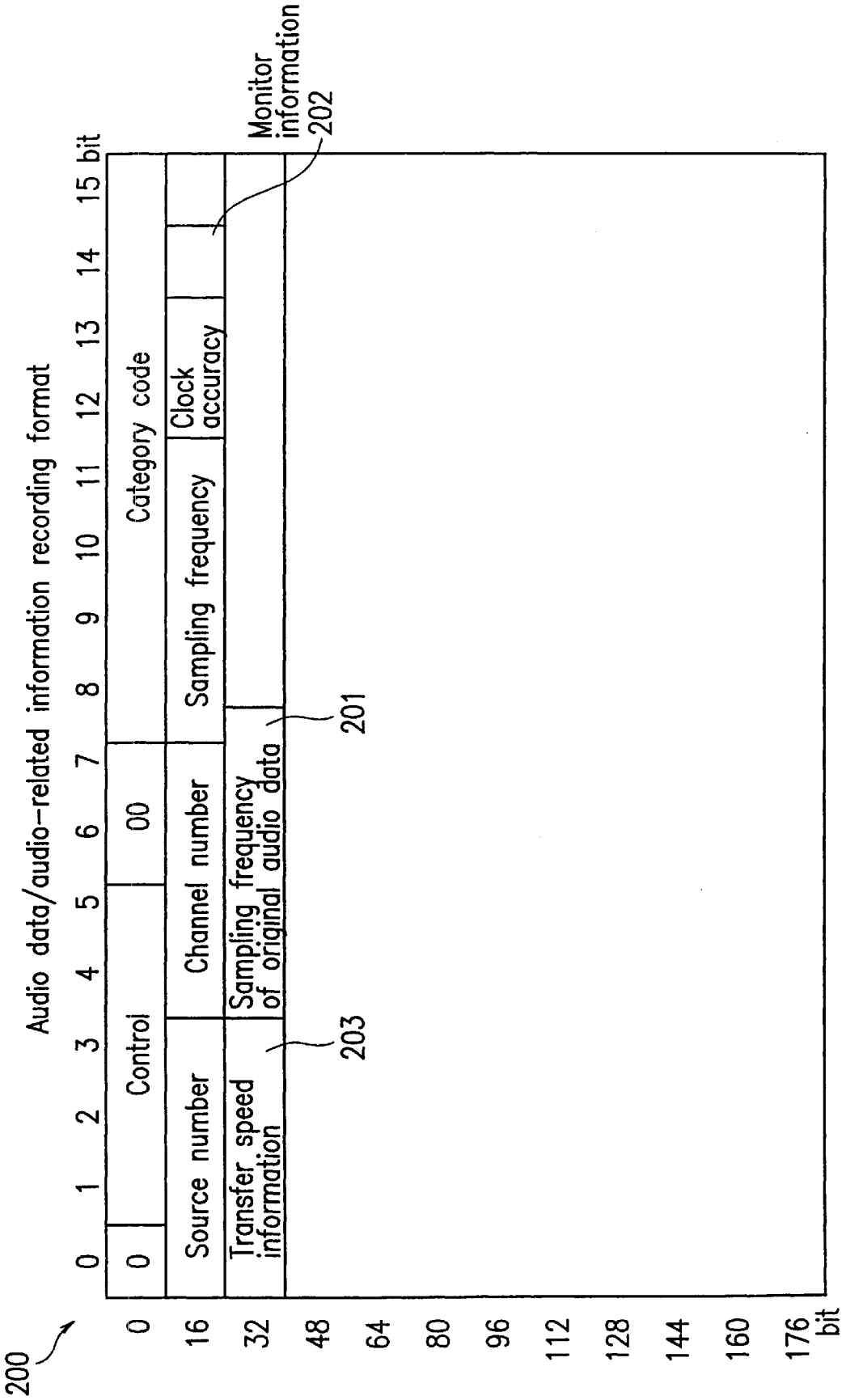
Audio data/audio-related information recording format
200
0
1
2
3
4
5
6
7
8
9
10
11
12
13
14
15 bit
0
Control
00
Category code
Source number
Channel number
Sampling frequency
Clock accuracy
Transfer speed information
Sampling frequency of original audio data
Monitor information
202
201
203
0
16
32
48
64
80
96
112
128
144
160
176 bit

FIG. 3

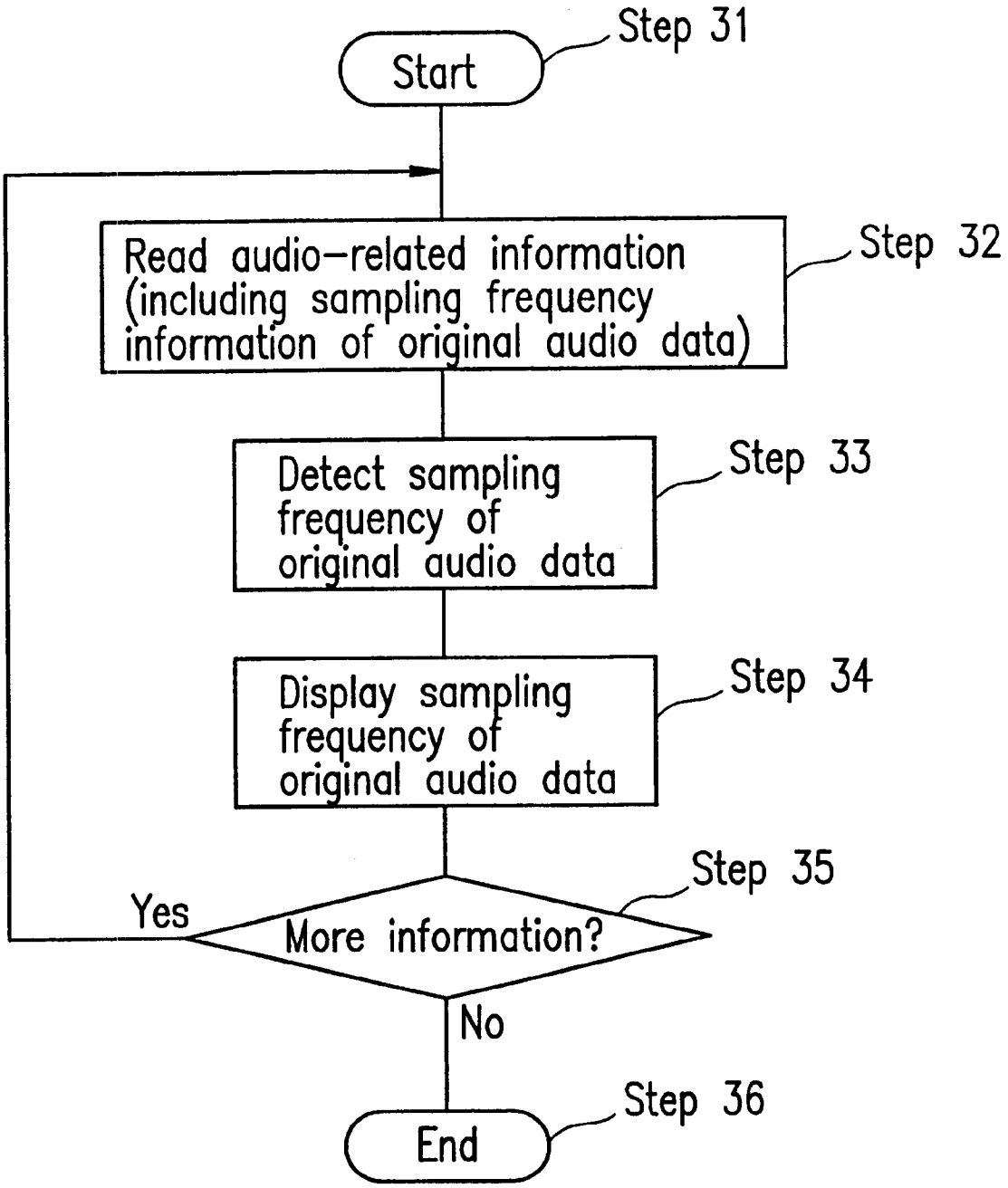
Start
Step 31
Read audio-related information (including sampling frequency information of original audio data)
Step 32
Detect sampling frequency of original audio data
Step 33
Display sampling frequency of original audio data
Step 34
More information?
Step 35
Yes
No
End
Step 36

FIG. 4

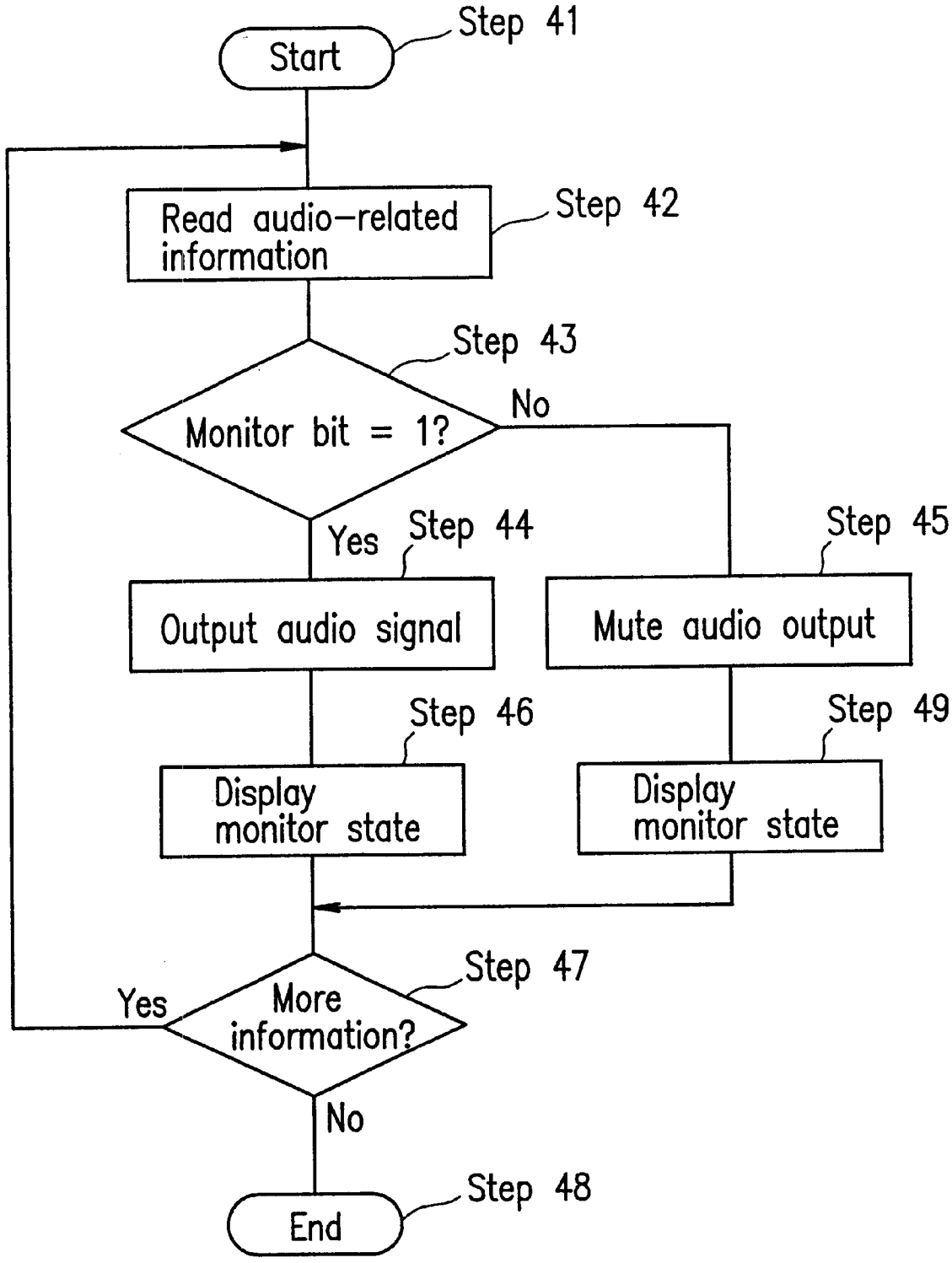
Start
Step 41
Read audio-related information
Step 42
Step 43
Monitor bit = 1?
No
Yes
Step 44
Step 45
Output audio signal
Mute audio output
Step 46
Step 49
Display monitor state
Display monitor state
Step 47
Yes
More information?
No
Step 48
End

PRIOR ART

FIG. 5

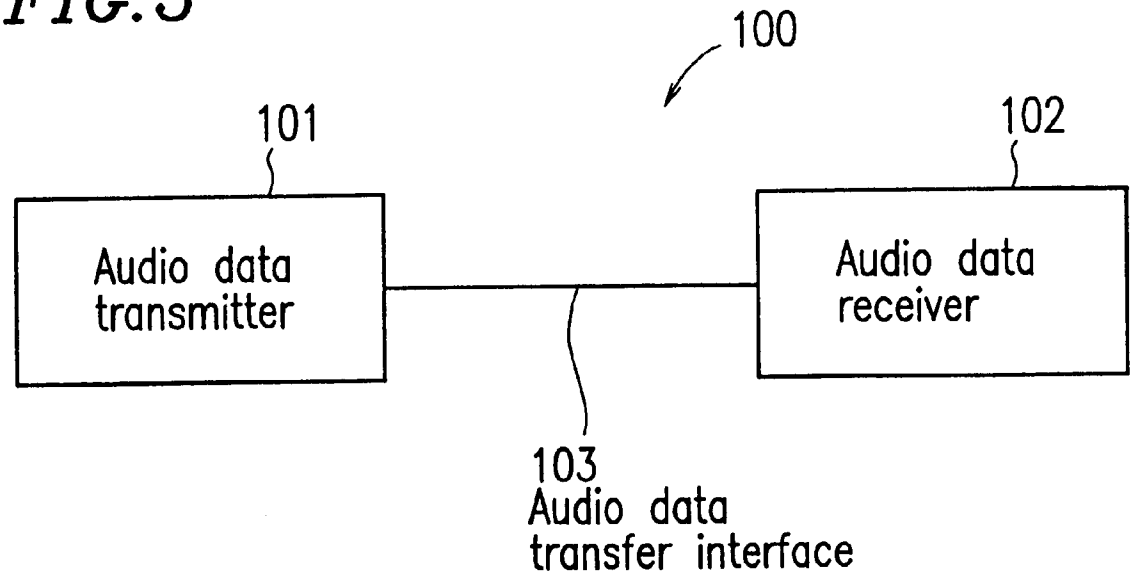

PRIOR ART

FIG. 6

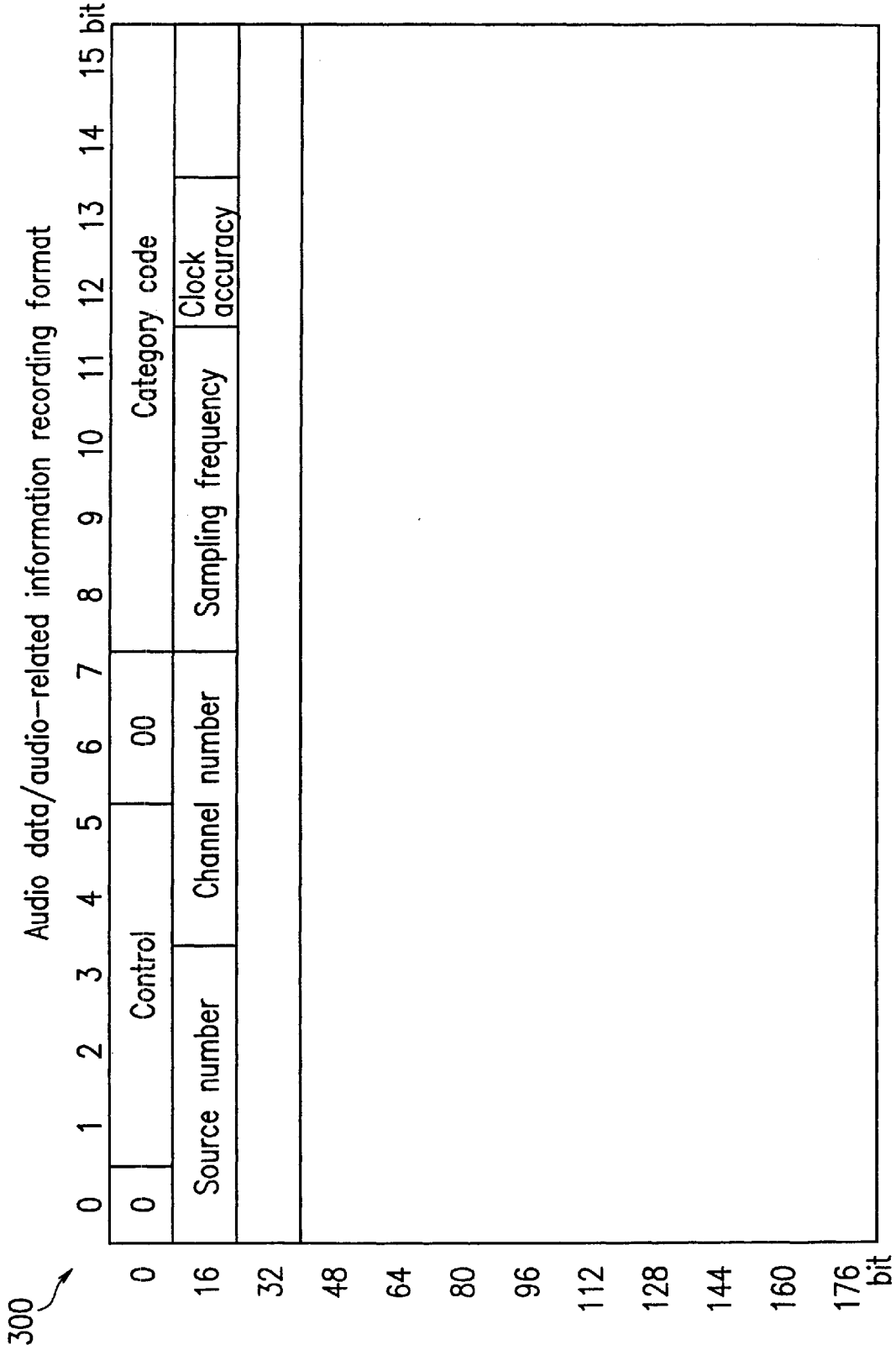

APPARATUS AND METHOD FOR AUDIO DATA/AUDIO-RELATED INFORMATION TRANSFER

BACKGROUND OF THE INVENTION

1. Field of the Invention

The present invention relates to a method and apparatus for digitally transferring audio data and audio-related information.

2. Description of the Related Art

As used herein, "audio data" is distinguished from "audio-related information". The "audio data" is the information representing the actual sounds to be reproduced. The "audio-related information" is defined as any information that does not directly represent the actual sounds to be reproduced, e.g., category codes, source numbers, and channel numbers.

Conventional methods for digitally transferring audio data and audio-related information are based on, for example, international standards such as IEC60958 and IEC61937.

IEC60958, which is used for transferring 2-channel linear PCM data, is used in a wide range of digital data transfer applications including CDs and DVDs. IEC61937 is used for the transfer of data other than linear PCM data, such as compressed data (e.g., data compressed according to the MPEG standards). In recent years, IEC61937 is used in applications where the multi-channel audio outputs from a DVD apparatus are utilized for reproduction by an external decoder amplifier connected to the DVD apparatus.

The aforementioned conventional methods for transferring audio data and audio-related information aim at simply reproducing the transferred audio data.

In recent years, frequencies such as 96 kHz, up to 192 kHz, are adopted as sampling frequencies for DVDs and the like.

However, the aforementioned conventional transfer standards do not support sampling frequencies such as 96 kHz and 192 kHz. Therefore, when a player is connected to an external apparatus, the original audio data is subjected to a down sampling process or the like for converting the sampling frequency to 48 kHz before transfer. In this case, however, there is a problem in that the external apparatus receiving the transferred data is not aware of the value of the sampling frequency at which the original audio data was sampled.

FIG. **5** shows an audio data transfer apparatus **100** as a consumer-use digital audio apparatus. The audio data transfer apparatus **100** includes an audio data transmitter **101** for transmitting audio data and an audio data receiver **102** for receiving the transmitted audio data, the transmitter **101** and the receiver **102** being interconnected via an audio data transfer interface **103** designed for audio data transfer.

Tables 1 and 2 show transfer conditions for transferring audio data from the audio data transmitter **101** in the aforementioned audio data transfer apparatus **100**.

TABLE 1

Signal processing or date transfer processing	Sampling frequency of transferred data	Monitoring frequency at the receiving end
down-sampling	sampling frequency after down-sampling	sampling frequency after down-sampling

TABLE 1-continued

Signal processing or date transfer processing	Sampling frequency of transferred data	Monitoring frequency at the receiving end
up-sampling	sampling frequency after up-sampling	sampling frequency after up-sampling
sampling conversion	sampling frequency after sampling conversion	sampling frequency after sampling conversion
N times speed transfer	original sampling frequency	N times
1/N times speed transfer	original sampling frequency	1/N times

TABLE 2

Signal processing or data transfer processing	Monitoring ability
down-sampling	possible
up-sampling	possible
sampling conversion	possible
N times speed transfer	impossible
1/N times speed transfer	impossible

As shown in Table 1, the transfer conditions for the audio data transfer apparatus **100** include up-sampling, down-sampling, sampling conversion, N times speed transfer, 1/N times speed transfer, etc., in addition to transferring the original audio data at the originally-intended speed.

Under up-sampling, down-sampling, sampling conversion conditions, the sampling frequency of the transferred audio data differs from that of the original audio data. However, the audio-related information which is transferred In the conventional audio data transfer apparatus **100** does not include information concerning the sampling frequency of the original audio data. As a result, there is a problem in that the audio data receiver **102** cannot obtain any information concerning the sampling frequency of the original audio data.

Under conditions where audio data is transferred at an N times transfer speed or a 1/N times transfer speed, the sampling frequency of the original audio data is retained; however, the audio data receiver **102** cannot monitor the transferred data as it is (see Table 2). In order to properly monitor the audio data transferred under N times transfer or 1/N times transfer conditions, it is necessary to reproduce the audio data at an N times or 1/N times speed, or to reproduce the audio data at the sampling frequency of the original audio data while storing the transferred audio data in large memories. In the case of non-PCM data, subjecting the transferred data to a decoding process which does not involve some special measures would result in the audio information being reproduced with unwanted interruptions because the audio data receiver **102** often cannot perform the decoding process in time.

FIG. **6** illustrates an example of a conventional audio data/audio-related information recording format **300**. As shown in FIG. **6**, the conventional audio data/audio-related information recording format **300** contains no information indicating the sampling frequency of the original audio data or no information indicating the transfer speed of the transferred audio data. Hence, it is impossible for the audio data receiver **102** to detect the sampling frequency of the original audio data or the transfer speed of the transferred audio data.

SUMMARY OF THE INVENTION

According to one aspect of the present invention, there is provided a method for transferring audio data and audio-related information, comprising: a generation step of generating second audio data from first audio data; a transmission step of transmitting the second audio data and audio-related information associated with the second audio data; and a reception step of receiving the second audio data and the audio-related information, wherein the audio-related information includes information representing a sampling frequency of the first audio data.

In one embodiment of the invention, the transmission step comprises a conversion step of converting the sampling frequency of the first audio data into a sampling frequency which is suitable for reproduction at the reception step.

In another embodiment of the invention, the conversion step comprises a down-sampling.

In still another embodiment of the invention, the conversion step comprises an up-sampling.

In still another embodiment of the invention, the conversion step comprises a sampling conversion.

In still another embodiment of the invention, the reception step comprises displaying the sampling frequency of the first audio data on a display.

Alternatively, there is provided a method for transferring audio data and audio-related information, comprising: a transmission step of transmitting the audio data and audio-related information associated with the audio data; and a reception step of receiving the audio data and the audio-related information, wherein the audio-related information includes monitor information indicating whether or not the audio data is capable of being monitored in the reception step.

In one embodiment of the invention, the reception step comprises displaying the monitor information on a display.

In another embodiment of the invention, the method further comprises a muting step of muting the audio data if the monitor information indicates that the audio data is not capable of being monitored in the reception step.

Alternatively, there is provided a method for transferring audio data and audio-related information, comprising: a transmission step of transmitting the audio data and audio-related information associated with the audio data; and a reception stop of receiving the audio data and the audio-related information, wherein the audio-related information includes information representing a transfer speed of the audio data.

In one embodiment of the invention, the reception step comprises displaying the transfer speed on a display.

According to another aspect of the present invention, there is provided an audio data/audio-related information transfer apparatus for transferring audio data and audio-related information, comprising: a transmitter for transmitting second audio data and audio-related information associated with the second audio data, the second audio data being generated from first audio data; and a receiver for receiving the second audio data and the audio-related information, wherein the audio-related information includes information representing a sampling frequency of the first audio data.

In one embodiment of the invention, the transmitter converts the sampling frequency of the first audio data into a sampling frequency which is suitable for reproduction by the receiver.

In another embodiment of the invention, wherein the transmitter performs a down-sampling for the sampling frequency of the first audio data.

In still another embodiment of the invention, the transmitter performs an up-sampling for the sampling frequency of the first audio data.

In still another embodiment of the invention, the transmitter performs a sampling conversion for the sampling frequency of the first audio data.

In still another embodiment of the invention, the receiver comprises a display for displaying the sampling frequency of the first audio data.

Alternatively, there is provided an audio data/audio-related information transfer apparatus for transferring audio data and audio-related information, comprising: a transmitter for transmitting audio data and audio-related information associated with the audio data; and a receiver for receiving the audio data and the audio-related information, wherein the audio-related information includes monitor information indicating whether or not the audio data is capable of being monitored by the receiver.

In one embodiment of the invention, the receiver comprises a display for displaying the monitor information.

In another embodiment of the invention, the audio data is muted if the monitor information indicates that the audio data is not capable of being monitored by the receiver.

Alternatively, there is provided an audio data/audio-related information transfer apparatus for transferring audio data and audio-related information, comprising: a transmitter for transmitting audio data and audio-related information associated with the audio data; and a receiver for receiving the audio data and the audio-related information, wherein the audio-related information includes information representing a transfer speed of the audio data.

In one embodiment of the invention, the receiver comprises a display for displaying the transfer speed.

According to another aspect of the present invention, there is provided a transmitter for transmitting second audio data and audio-related information associated with the second audio data, the second audio data being generated from first audio data, wherein the audio-related information includes information representing a sampling frequency of the first audio data.

In one embodiment of the invention, the transmitter converts the sampling frequency of the first audio data into a sampling frequency which is suitable for reproduction by the receiver.

In another embodiment of the invention, the transmitter performs a down-sampling for the sampling frequency of the first audio data.

In still another embodiment of the invention, the transmitter performs an up-sampling for the sampling frequency of the first audio data.

In still another embodiment of the invention, the transmitter performs a sampling conversion for the sampling frequency of the first audio data.

According to another aspect of the present invention, there is provided a transmitter for transmitting audio data and audio-related information associated with the audio data, wherein the audio-related information includes monitor information indicating whether or not the audio data is capable of being monitored by the receiver.

Alternatively, there is provided a transmitter for transmitting audio data and audio-related information associated

with the audio data, wherein the audio-related information includes information representing a transfer speed of the audio data.

According to another aspect of the present invention, there is provided a receiver for receiving second audio data and audio-related information associated with the second audio data, the second audio data being generated from first audio data and transmitted from a transmitter, wherein the audio-related information includes information representing a sampling frequency of the first audio data.

In one embodiment of the invention, the receiver comprises a display for displaying the sampling frequency of the first audio data.

Alternatively, there is provided a receiver for receiving audio data and audio-related information associated with the audio data, wherein the audio-related information includes monitor information Indicating whether or not the audio data is capable of being monitored by the receiver.

In one embodiment of the invention, the receiver comprises a display for displaying the monitor information.

In another embodiment of the invention, the audio data is muted if the monitor information indicates that the audio data is not capable of being monitored by the receiver.

Alternatively, there is provided a receiver for receiving audio data and audio-related information associated with the audio data, the audio data being transmitted from a transmitter, wherein the audio-related information includes information representing a sampling frequency of the first audio data.

In one embodiment of the invention, the receiver comprises a display for displaying the transfer speed.

Thus, the invention described herein makes possible the advantage of providing a method and apparatus for performing digital transfer of audio data which involves concurrently transferring information indicating a sampling frequency, monitoring ability, and a transfer speed of audio data, thereby enabling a mode of audio reproduction which is in accordance with the particular audio data that is being transferred.

This and other advantages of the present invention will become apparent to those skilled in the art upon reading and understanding the following detailed description with reference to the accompanying figures.

BRIEF DESCRIPTION OF THE DRAWINGS

FIG. **1** is a block diagram illustrating an audio data transfer apparatus according to an example of the present invention.

FIG. **2** is a diagram illustrating an audio data/audio-related information recording format according to an example of the present invention.

FIG. **3** is a flowchart illustrating a flow of steps performed during original audio data sampling frequency information processing according to an example of the present invention.

FIG. **4** is a flowchart illustrating a flow of steps during monitor information processing according to an example of the present invention.

FIG. **5** In a block diagram illustrating a conventional audio data transfer apparatus.

FIG. **6** is a diagram illustrating a conventional audio data/audio-related information recording format.

DESCRIPTION OF THE PREFERRED EMBODIMENTS

The present invention will be described with respect to an audio data transfer method in accordance with the IEC 60958 or IEC61937 transfer standards, with reference to the accompanying figures.

As for the details of the IEC 60958 and IEC61937 transfer standards, see Interface for Non-linear PCM Encoded Audio Bitstreams Applying IEC61937, for example.

FIG. **1** illustrates an audio data transfer apparatus **10** according to an example of the present invention. The audio data transfer apparatus **10** includes an audio data transmitter **1** for transmitting audio data and an audio data receiver **2** for receiving the transmitted audio data, the audio data transmitter **1** and the audio data receiver **2** being interconnected via an audio data transfer interface **3** designed for audio data transfer. The audio data transmitter **1** may be a DVD player or a set top box (STB), for example. The audio data receiver **2** may be an AV decoder or a minidisk apparatus, for example. The audio data transfer interface **3** may be a conductive cable or an optical fiber, for example.

In accordance with the audio data transfer apparatus **10**, audio data is first analyzed by a digital audio data attribute analysis section **11**. Then, a digital audio data generation section **12** adds appropriate audio-related information to the audio data (described below). Thereafter, the audio data is modulated by a digital audio data modulation section **13**, and output to the audio data transfer interface **3** so as to be transferred to the audio data receiver **2**.

FIG. **2** illustrates an audio data/audio-related information recording format **200** according to an example of the present invention.

In the audio data/audio-related information recording format **200** shown in FIG. **2**, sampling frequency data of the original audio data are assigned in a region **201** spanning the 36th to 39th bits. Table 3 shows the correspondence between the sampling frequency of the original audio data and bit information.

TABLE 3

Sampling frequency data of original audio data

bit 36 (LSB) - bit 39 (MSB)	sampling frequency
"0000"	44.1 kHz
"0001"	22.05 kHz
"0010"	88.2 kHz
"0100"	48 kHz
"0101"	24 kHz
"0100"	96 kHz
"1100"	32 kHz
"1101"	16 kHz
"1110"	64 kHz
others	undefined

In Table 3, nine sampling frequency values are assigned as the sampling frequency for original audio data: sampling frequencies which are currently in common use (i.e., 32 kHz, 44.1 kHz, and 48 kHz); frequencies twice those values (i.e., 64 kHz, 88.2 kHz, and 96 kHz), and frequencies half those values (i.e., 16 kHz, 22.05 kHz, and 24 kHz).

Since the audio data/audio-related information recording format **200** (FIG. **2**) includes information representing the sampling frequency of the original audio data as illustrated in Table 3, it is possible for the audio data receiver **2** to detect the sampling frequency of the original audio data even in the case where the audio data to be transferred are down-sampled from the sampling frequencies 96 kHz and 88.2 kHz, which are adopted by the DVD audio standards. Moreover, the audio data/audio-related information recording format **200** (FIG. **2**) also supports half-rate frequencies of the MPEG2 frequencies, which are adopted by digital

satellite broadcast. Even in the case where the audio data to be transferred are up-sampled from such frequencies, it is possible for the audio data receiver **2** to detect the audio-related information associated with the original audio data.

In the audio data/audio-related information recording format **200** (FIG. **2**), monitor information is assigned in a region **202** at bit **30**. For example, the monitor information can be expressed by one bit as shown in Table 4.

TABLE 4

Examples of monitor bits

bit 30	Monitoring ability
"1"	possible
"0"	impossible

The audio data transmitter **1** sets bit **30** to "1" if it is possible to monitor the audio data, and sets bit **30** to "0" if monitoring ability is not guaranteed (e.g., if it is impossible to monitor the audio data).

Furthermore, in the audio data/audio-related information recording format **200** shown in FIG. **2**, transfer speed information is assigned in a region **203** spanning the 32nd to 35th bits. The transfer speed information may be expressed by four bits as shown in Table 5, for example.

TABLE 5

bit 32 (LSB) - bit 35 (MSB)	transfer speed
"0000"	4 times
"0001"	2 times
"0010"	1 time
"0100"	½ times
"0101"	¼ times

Since the audio data/audio-related information recording format **200** (FIG. **2**) includes information representing the transfer speed information as illustrated in Table 5, it is possible for the audio data receiver **2** to detect the transfer speed of audio data even in the case where the audio data is transferred at an N times or 1/N times speed. In the case where the audio data receiver **2** includes a data processing means which is capable of reproducing audio data at varying speeds, it is possible to vary the reproduction speed of the received audio data on the basis of the detected transfer speed information.

Although Table 5 illustrates 4 times to ¼ times transfer speeds, the present invention is applicable to any transfer speed.

Referring back to FIG. **1**, the audio data, as well as audio-related information including the aforementioned additional information (e.g., sampling frequency information and transfer speed information), is transferred to the audio data receiver **2** in accordance with the audio data transfer apparatus **10**.

In the audio data receiver **2**, the received audio data and audio-related information in demodulated by a digital audio data demodulation section **21**, and the audio-related information is analyzed by an additional information analysis section **22**. Then, after the audio data is processed by a data processing section **23**, the audio data is converted into an analog signal by a D/A converter section **24** for output. A display data generation section **25** generates display data based on the audio-related information, which is displayed on a display **26**.

FIG. **3** is a flowchart showing a flow of steps for a processing of the sampling frequency information of original audio data which is performed by the audio data receiver **2**.

At Step **32**, audio-related information including the sampling frequency information of original audio data to read by an additional information analysis section **22** of the audio data receiver **2**. Next, at Step **33**, the additional information analysis section **22** looks up in Table 3 the bit information representing the sampling frequency of the original audio data that has been read, thereby detecting the sampling frequency of the original audio data. At Step **34**, the display data generation section **25** displays the detected sampling frequency of the original audio data on the display **26**.

FIG. **4** is a flowchart showing the monitor information processing performed in the audio data receiver **2**. Specifically, FIG. **4** illustrates monitor information processing performed in the case where the audio-related information does not include transfer speed information, or where the audio data receiver **2** does not include a data processing means which is capable of reproducing audio data at varying speeds.

At Step **42**, audio-related information including the monitor information of original audio data is read by the additional information analysis section **22** of the audio data receiver **2**. Next, at Step **43**, the additional information analysis section **22** detects or determines whether or not the monitor bit (e.g., bit **30**) is "1", if the monitor bit is "1", it is possible to monitor the audio data, so that the transferred data is subjected to appropriate signal processing at the data processing section **23** and the D/A converter section **24**, and thereafter output as audio data at step **44**. Next, at Step **46**, the display **26** displays information indicating that the audio data can be monitored or in being monitored.

On the other hand, in the case where the audio data is transferred at an increased speed (N times speed) or at a decreased speed (1/N times speed), it is impossible to detect what multiples of the original frequency the data is being transferred at. In such cases, the audio data transmitter **1** transmits "0" as the monitor bit to indicate that the audio data cannot be monitored. When the monitor information indicating that monitoring is impossible is read by the additional information analysis section **22** in the audio data receiver **2**, the audio output is muted at Step **45**, and the display **26** displays information indicating that the audio data cannot be monitored or is being muted at Step **49**.

In the case where the audio-related information includes transfer speed information, the transfer speed information is analyzed by the additional information analysis section **22**, and the transfer speed is displayed on the display **26**.

In the case where the audio data receiver **2** includes a data processing means which is capable of reproducing audio data at varying speeds, the speed of the audio data is changed based on the detected transfer speed information, and the audio data is reproduced at the changed speed.

The present invention has been described above with respect to certain embodiments. The sampling frequency information, the monitor information, and the transfer speed information of the original audio data may all be included in the audio data/audio-related information recording format **200**. Alternatively, each type of information may be selectively included depending on the needs of the particular application. For example, the audio data/audio-related information recording format **200** may only include the sampling frequency information of the original audio data.

The audio data/audio-related information recording format **200** described above is only illustrative. Any other

format may be employed as the audio data/audio-related information recording format **200**.

Although the audio data transfer according to the above example of the present invention is achieved via an audio data transfer interface **3**, audio data may be transferred by any other transfer means that is capable of transferring digital information. For example, it is possible to transfer audio data via a radio transmission/reception means.

The present invention is applicable not only to the IEC 60958 and IEC61937 transfer standards but also any digital data transfer standards, e.g., IEEE 1394, which is a set of audio video data transfer standards to be enforced in future.

As described above, according to the present invention, an audio data transmitter adds, to audio data to be transferred, information indicating a sampling frequency of the original audio data, monitoring ability (indicating whether or not it is possible to monitor the transferred audio data at an audio data receiver), and a transfer speed of audio data. As a result, various information concerning the transferred data can be detected by the audio data receiver. This enables a mode of audio reproduction which is in accordance with the particular audio data that is being transferred.

Various other modifications will be apparent to and can be readily made by those skilled in the art without departing from the scope and spirit of this invention. Accordingly, it is not intended that the scope of the claims appended hereto be limited to the description as set forth herein, but rather that the claims be broadly construed.

What is claimed is:

1. A method for transferring audio data and audio-related information, comprising:

a generation step of generating second audio data from first audio data;

a transmission step of transmitting the second audio data and audio-related information associated with the second audio data; and

a reception step of receiving the second audio data and the audio-related information,

wherein the audio-related information includes information representing a sampling frequency of the first audio data.

2. A method according to claim **1**, wherein the transmission step comprises a conversion step of converting the sampling frequency of the first audio data into a sampling frequency which is suitable for reproduction at the reception step.

3. A method according to claim **2**, wherein the conversion step comprises a down-sampling.

4. A method according to claim **2**, wherein the conversion stop comprises an up-sampling.

5. A method according to claim **2**, wherein the conversion step comprises a sampling conversion.

6. A method according to claim **1**, wherein the reception step comprises displaying the sampling frequency of the first audio data on a display.

7. A method for transferring audio data and audio-related information, comprising:

a transmission step of transmitting the audio data and audio-related information associated with the audio data; and

a reception step of receiving the audio data and the audio-related information,

wherein the audio-related information includes monitor information indicating whether or not the audio data is capable of being monitored in the reception step.

8. A method according to claim **7**, wherein the reception step comprises displaying the monitor information on a display.

9. A method according to claim **7**, further comprising a muting step of muting the audio data if the monitor information indicates that the audio data is not capable of being monitored in the reception step.

10. A method for transferring audio data and audio-related information, comprising:

a transmission step of transmitting the audio data and audio-related information associated with the audio data: and

a reception step of receiving the audio data and the audio-related information,

wherein the audio-related information includes information representing a transfer speed of the audio data.

11. A method according to claim **10**, wherein the reception step comprises displaying the transfer speed on a display.

12. A audio data/audio-related information transfer apparatus for transferring audio data and audio-related information, comprising:

a transmitter for transmitting second audio data and audio-related information associated with the second audio data, the second audio data being generated from first audio data; and

a receiver for receiving the second audio data and the audio-related information,

wherein the audio-related information includes information representing a sampling frequency of the first audio data.

13. A audio data/audio-related information transfer apparatus according to claim **12**,

wherein the transmitter converts the sampling frequency of the first audio data into a sampling frequency which is suitable for reproduction by the receiver.

14. A audio data/audio-related information transfer apparatus according to claim **13**, wherein the transmitter performs a down-sampling for the sampling frequency of the first audio data.

15. A audio data/audio-related information transfer apparatus according to claim **13**, wherein the transmitter performs an up-sampling for the sampling frequency of the first audio data.

16. A audio data/audio-related information transfer apparatus according to claim **13**, wherein the transmitter performs a sampling conversion for the sampling frequency of the first audio data.

17. A audio data/audio-related information transfer apparatus according to claim **12**, wherein the receiver comprises a display for displaying the sampling frequency of the first audio data.

18. A audio data/audio-related information transfer apparatus for transferring audio data and audio-related information, comprising:

a transmitter for transmitting audio data and audio-related information associated with the audio data; and

a receiver for receiving the audio data and the audio-related information,

wherein the audio-related information includes monitor information indicating whether or not the audio data is capable of being monitored by the receiver.

19. A audio data/audio-related information transfer apparatus according to claim **18**, wherein the receiver comprises a display for displaying the monitor information.

20. A audio data/audio-related information transfer apparatus according to claim **18**, wherein the audio data is muted

if the monitor information indicates that the audio data is not capable of being monitored by the receiver.

21. A audio data/audio-related information transfer apparatus for transferring audio data and audio-related information, comprising:

a transmitter for transmitting audio data and audio-related information associated with the audio data; and

a receiver for receiving the audio data and the audio-related information,

wherein the audio-related information includes information representing a transfer speed of the audio data.

22. A audio data/audio-related information transfer apparatus according to claim **21**, wherein the receiver comprises a display for displaying the transfer speed.

23. A transmitter for transmitting second audio data and audio-related information associated with the second audio data, the second audio data being generated from first audio data,

wherein the audio-related information includes information representing a sampling frequency of the first audio data.

24. A transmitter according to claim **23**,

wherein the transmitter converts the sampling frequency of the first audio data into a sampling frequency which is suitable for reproduction by the receiver.

25. A transmitter according to claim **24**, wherein the transmitter performs a down-sampling for the sampling frequency of the first audio data.

26. A transmitter according to claim **24**, wherein the transmitter performs an up-sampling for the sampling frequency of the first audio data.

27. A transmitter according to claim **24**, wherein the transmitter performs a sampling conversion for the sampling frequency of the first audio data.

* * * * *

UNITED STATES PATENT AND TRADEMARK OFFICE

CERTIFICATE OF CORRECTION

PATENT NO. : 6,584,443 B1
DATED : June 24, 2003
INVENTOR(S) : Kawamura et al.

It is certified that error appears in the above-identified patent and that said Letters Patent is hereby corrected as shown below:

Column 9,
Line 51, delete “stop” and insert -- step -- therefore.

Signed and Sealed this

Twenty-first Day of October, 2003

JAMES E. ROGAN
Director of the United States Patent and Trademark Office

EXHIBIT 6

US007069224B2

(12) **United States Patent**
Kawamura et al.

(10) **Patent No.: US 7,069,224 B2**
(45) **Date of Patent: *Jun. 27, 2006**

(54) **RECEIVER FOR RECEIVING AUDIO DATA AND AUDIO-RELATED INFORMATION**

(75) Inventors: **Akihisa Kawamura**, Osaka (JP); **Naoki Ejima**, Osaka (JP); **Masatoshi Shimbo**, Osaka (JP)

(73) Assignee: **Matsushita Electric Industrial Co., Ltd.**, Osaka (JP)

(*) Notice: Subject to any disclaimer, the term of this patent is extended or adjusted under 35 U.S.C. 154(b) by 405 days.

This patent is subject to a terminal disclaimer.

(21) Appl. No.: **10/249,650**

(22) Filed: **Apr. 28, 2003**

(65) **Prior Publication Data**

US 2003/0171935 A1 Sep. 11, 2003

Related U.S. Application Data

(62) Division of application No. 09/553,590, filed on Apr. 20, 2000, now Pat. No. 6,584,443.

(30) **Foreign Application Priority Data**

Apr. 23, 1999 (JP) 11-115885
Apr. 4, 2000 (JP) 2000-102883

(51) **Int. Cl.**
G10L 19/00 (2006.01)

(52) **U.S. Cl.** **704/500**; 704/201

(58) **Field of Classification Search** ..... None
See application file for complete search history.

(56) **References Cited**

U.S. PATENT DOCUMENTS

4,553,129	A	11/1985	McNesby et al.	
4,901,168	A *	2/1990	Yoshida et al.	360/60
5,228,059	A	7/1993	Takegahara et al.	375/287
5,577,044	A	11/1996	Oxford	370/522
5,668,601	A *	9/1997	Okada et al.	375/240.25
5,892,746	A	4/1999	Heu et al.	369/59.25
6,175,592	B1	1/2001	Kim et al.	375/240.16
6,584,443	B1 *	6/2003	Kawamura et al.	704/500
6,673,995	B1 *	1/2004	Ogawa et al.	84/653

FOREIGN PATENT DOCUMENTS

CN	1084306 A	3/1994
CN	1205502 A	1/1999
EP	0 794 625 A2	9/1997
JP	11331218	11/1999

OTHER PUBLICATIONS

International Standard, "Digital Audio Interface", CEI/IEC 958:1989, no date.

* cited by examiner

Primary Examiner—Susan McFadden
(74) *Attorney, Agent, or Firm*—Snell & Wilmer L.L.P.

(57) **ABSTRACT**

A method for transferring audio data and audio-related information includes: a generation step of generating second audio data from first audio data; a transmission step of transmitting the second audio data and audio-related information associated with the second audio data; and a reception step of receiving the second audio data and the audio-related information, wherein the audio-related information includes information representing a sampling frequency of the first audio data.

7 Claims, 6 Drawing Sheets

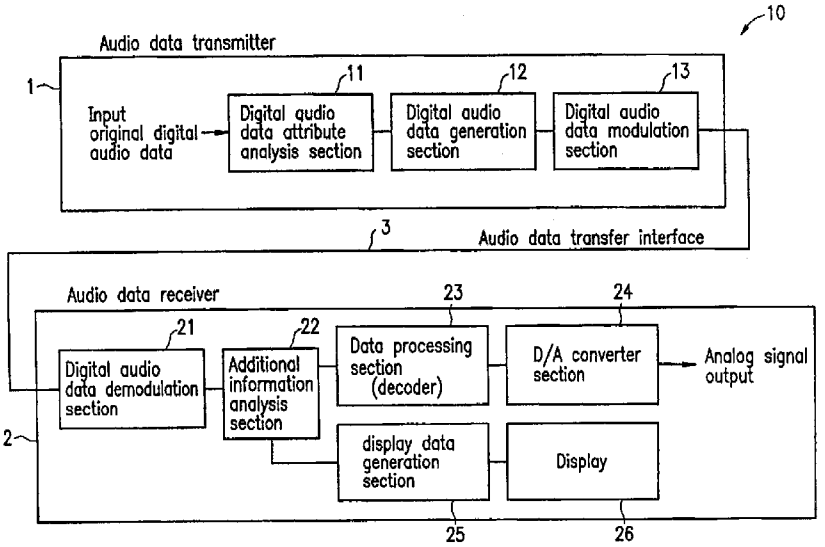

FIG. 1

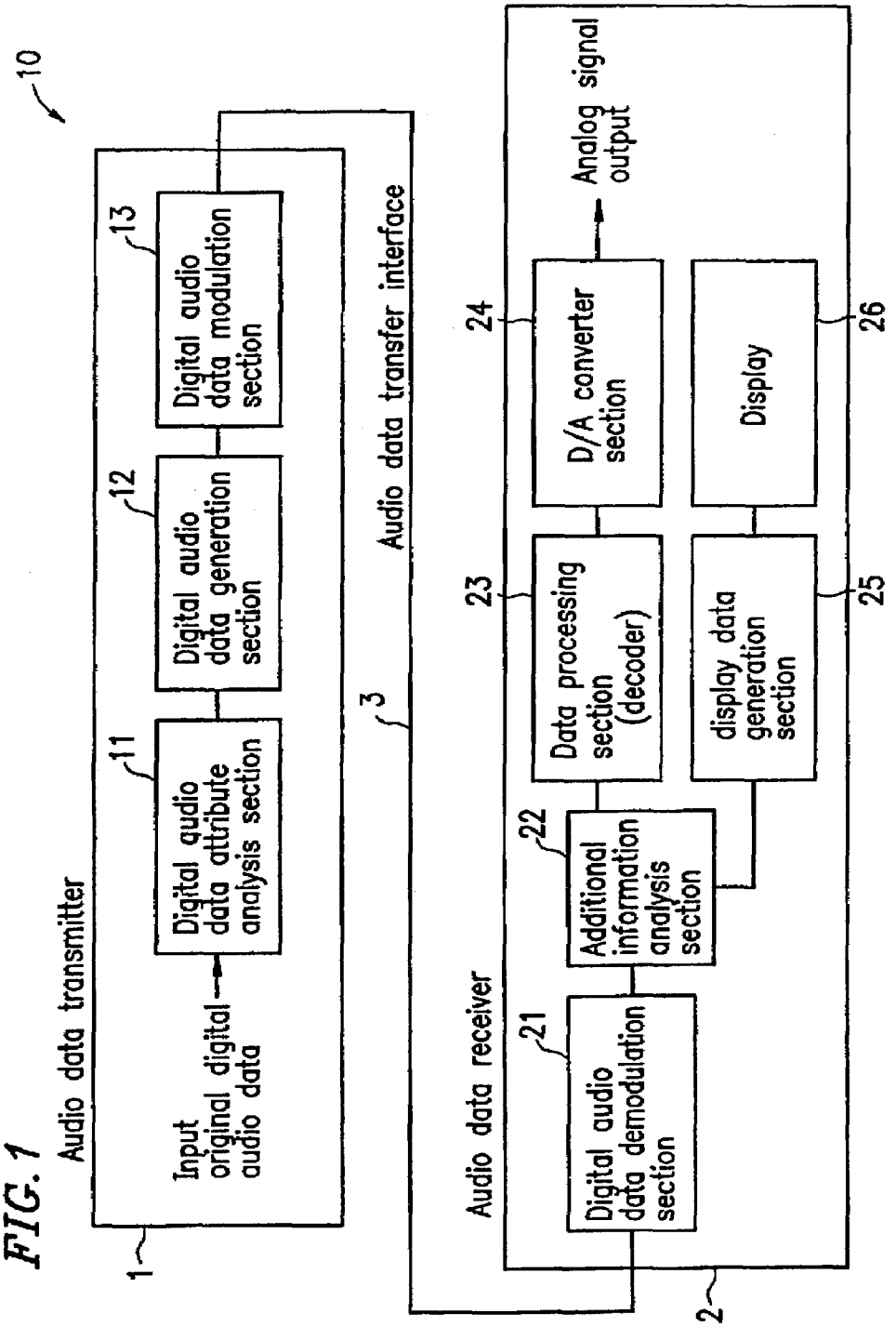
10
Audio data transmitter
1
Input original digital audio data
Digital audio data attribute analysis section
11
Digital audio data generation section
12
Digital audio data modulation section
13
Audio data transfer interface
3
Audio data receiver
2
Digital audio data demodulation section
21
Additional information analysis section
22
Data processing section (decoder)
23
D/A converter section
24
Analog signal output
display data generation section
25
Display
26

FIG.2

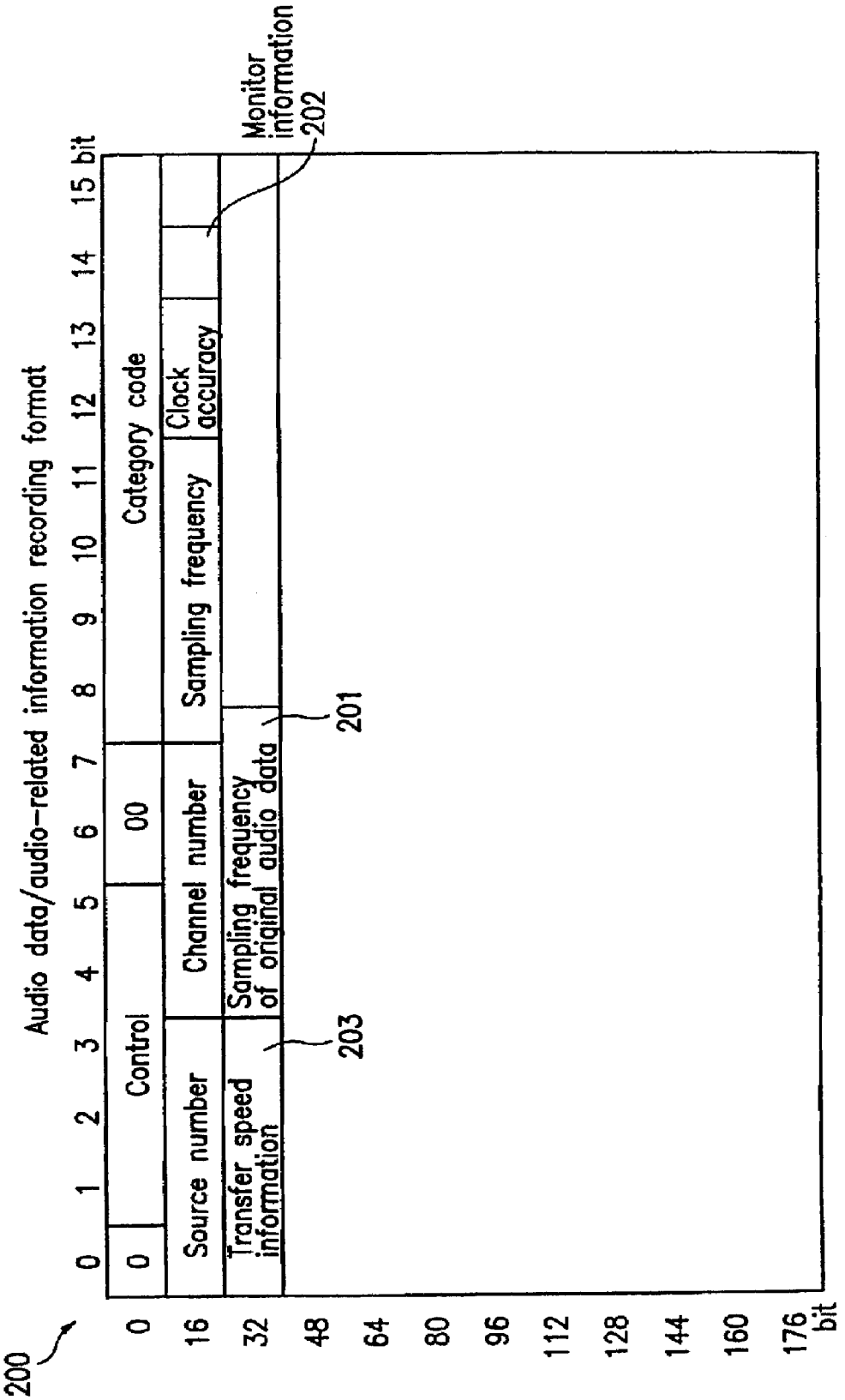
200
Audio data/audio-related information recording format
0 1 2 3 4 5 6 7 8 9 10 11 12 13 14 15 bit
0
Control
00
Category code
Source number
Channel number
Sampling frequency
Clock accuracy
Transfer speed information
Sampling frequency of original audio data
Monitor information
202
201
203
0 16 32 48 64 80 96 112 128 144 160 176 bit

FIG. 3

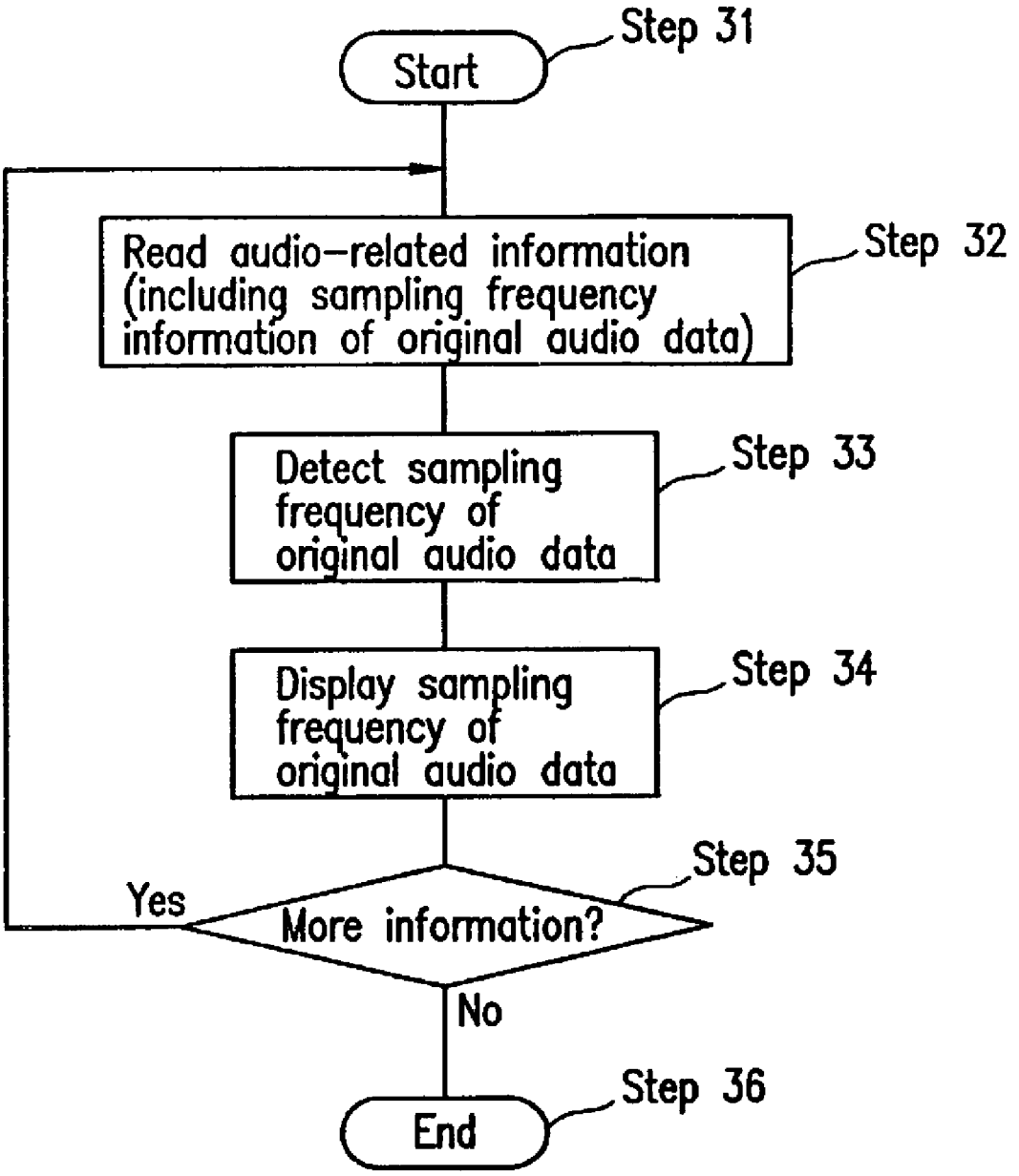
Start
Step 31
Read audio-related information (including sampling frequency information of original audio data)
Step 32
Detect sampling frequency of original audio data
Step 33
Display sampling frequency of original audio data
Step 34
More information?
Step 35
Yes
No
End
Step 36

FIG. 4

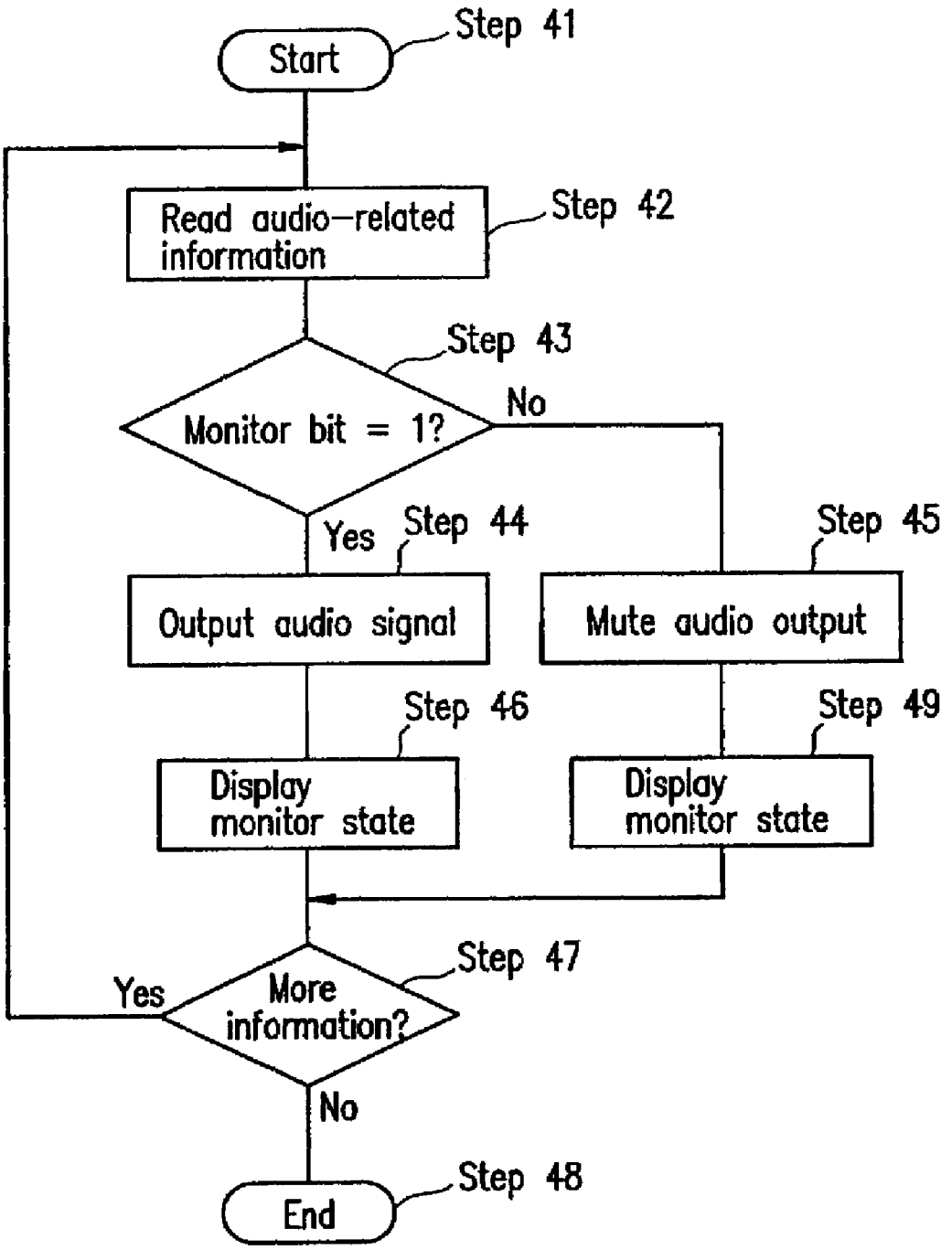
Start
Step 41
Read audio-related information
Step 42
Step 43
Monitor bit = 1?
No
Yes
Step 44
Step 45
Output audio signal
Mute audio output
Step 46
Step 49
Display monitor state
Display monitor state
Step 47
Yes
More information?
No
End
Step 48

PRIOR ART

FIG. 5

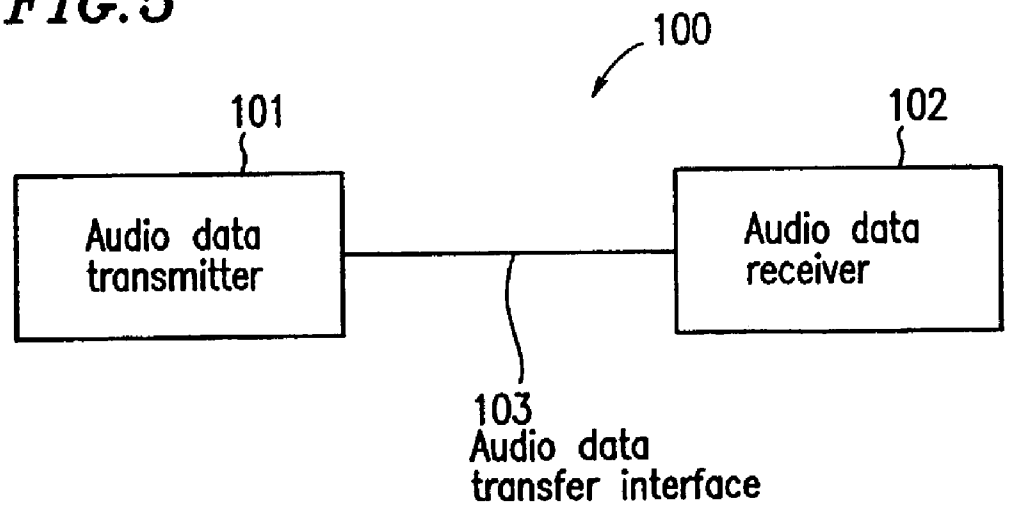

PRIOR ART

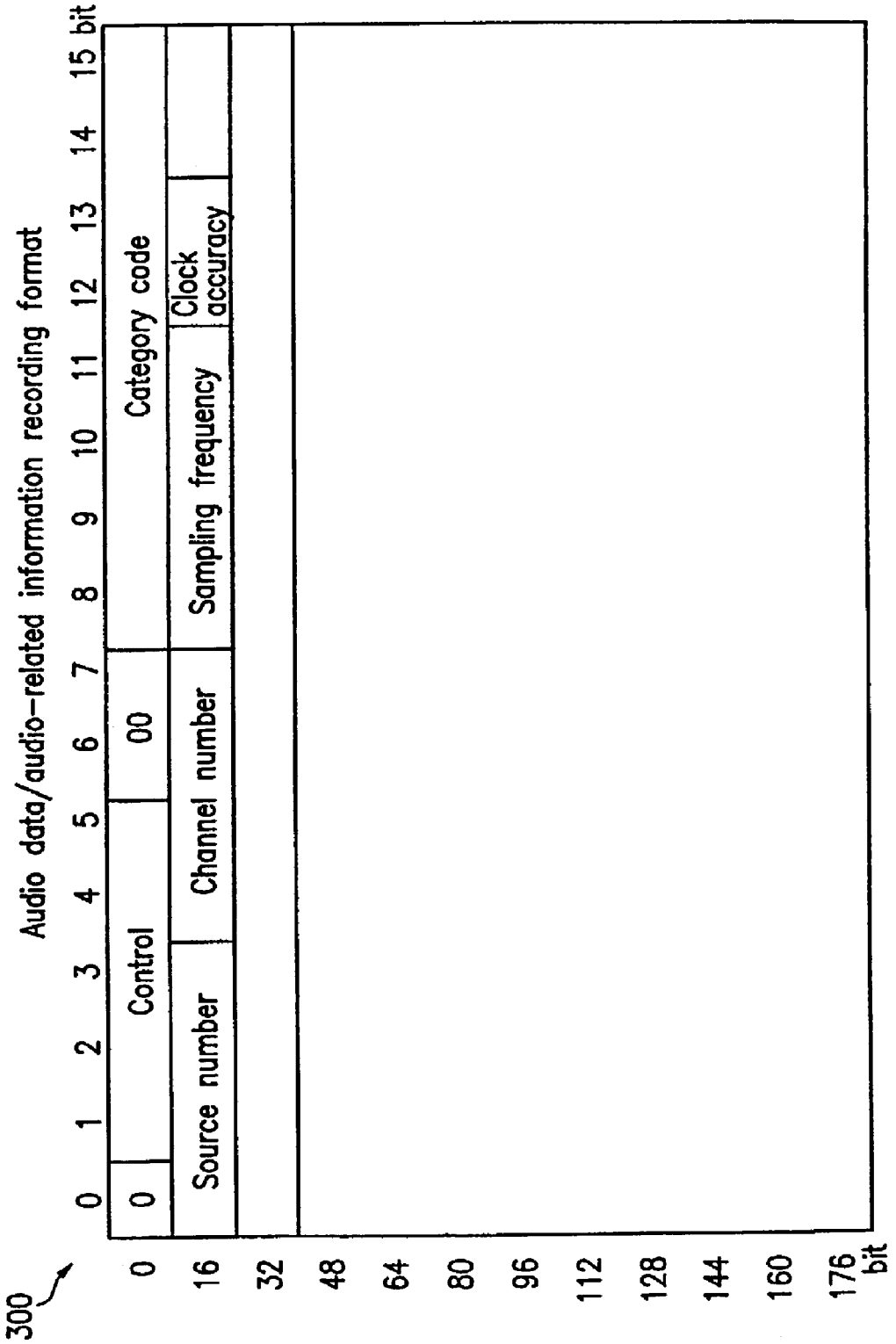

FIG. 6

RECEIVER FOR RECEIVING AUDIO DATA AND AUDIO-RELATED INFORMATION

CROSS REFERENCE TO RELATED APPLICATIONS

This application is a Divisional Application of U.S. application Ser. No. 09/553,590 filed Apr. 20, 2000 now U.S. Pat No. 6,584,443 and entitled APPARATUS AND METHOD FOR AUDIO DATA/AUDIO-RELATED INFORMATION TRANSFER, which application claims priority to Japanese Application Nos. 11-115885 and 2000-102883, filed Apr. 23, 1999 and Apr. 4, 2000, respectively.

BACKGROUND OF INVENTION

1. Field of the Invention

The present invention relates to a method and apparatus for digitally transferring audio data and audio-related information.

2. Description of the Related Art

As used herein, "audio data" is distinguished from "audio-related information". The "audio data"is the information representing the actual sounds to be reproduced. The "audio-related information"is defined as any information that does not directly represent the actual sounds to be reproduced, e.g., category codes, source numbers, and channel numbers.

Conventional methods for digitally transferring audio data and audio-related information are based on, for example, international standards such as IEC60958 and IEC61937.

IEC60958, which is used for transferring 2-channel linear PCM data, is used in a wide range of digital data transfer applications including CDs and DVDs. IEC61937 is used for the transfer of data other than linear PCM data, such as compressed data (e.g., data compressed according to the MPEG standards). In recent years, IEC61937 is used in applications where the multi-channel audio outputs from a DVD apparatus are utilized for reproduction by an external decoder amplifier connected to the DVD apparatus.

The aforementioned conventional methods for transferring audio data and audio-related information aim at simply reproducing the transferred audio data.

In recent years, frequencies such as 96 kHz, up to 192 kHz, are adopted as sampling frequencies for DVDs and the like.

However, the aforementioned conventional transfer standards do not support sampling frequencies such as 96 kHz and 192 kHz. Therefore, when a player is connected to an external apparatus, the original audio data is subjected to a down sampling process or the like for converting the sampling frequency to 48 kHz before transfer. In this case, however, there is a problem in that the external apparatus receiving the transferred data is not aware of the value of the sampling frequency at which the original audio data was sampled.

FIG. **5** shows an audio data transfer apparatus **100** as a consumer-use digital audio apparatus. The audio data transfer apparatus **100** includes an audio data transmitter **101** for transmitting audio data and an audio data receiver **102** for receiving the transmitted audio data, the transmitter **101** and the receiver **102** being interconnected via an audio data transfer interface **103** designed for audio data transfer.

Tables 1 and 2 show transfer conditions for transferring audio data from the audio data transmitter **101** in the aforementioned audio data transfer apparatus **100**.

TABLE 1

Signal processing or data transfer processing	Sampling frequency of transferred data	Monitoring frequency at the receiving end
down-sampling	sampling frequency after down-sampling	sampling frequency after down-sampling
up-sampling	sampling frequency after up-sampling	sampling frequency after up-sampling
sampling conversion	sampling frequency after sampling conversion	sampling frequency after sampling conversion
N times speed transfer	original sampling frequency	N times
1/N times speed transfer	original sampling frequency	1/N times

TABLE 2

Signal processing or data transfer processing	Monitoring ability
down-sampling	possible
up-sampling	possible
sampling conversion	possible
N times speed transfer	impossible
1/N times speed transfer	impossible

As shown in Table 1, the transfer conditions for the audio data transfer apparatus **100** include up-sampling, down-sampling, sampling conversion, N times speed transfer, 1/N times speed transfer, etc., in addition to transferring the original audio data at the originally-intended speed.

Under up-sampling, down-sampling, sampling conversion conditions, the sampling frequency of the transferred audio data differs from that of the original audio data. However, the audio-related information which is transferred in the conventional audio data transfer apparatus **100** does not include information concerning the sampling frequency of the original audio data. As a result, there is a problem in that the audio data receiver **102** cannot obtain any information concerning the sampling frequency of the original audio data.

Under conditions where audio data is transferred at an N times transfer speed or a 1/N times transfer speed, the sampling frequency of the original audio data is retained; however, the audio data receiver **102** cannot monitor the transferred data as it is (see Table 2). In order to properly monitor the audio data transferred under N times transfer or 1/N times transfer conditions, it is necessary to reproduce the audio data at an N times or 1/N times speed, or to reproduce the audio data at the sampling frequency of the original audio data while storing the transferred audio data in large memories. In the case of non-PCM data, subjecting the transferred data to a decoding process which does not involve some special measures would result in the audio information being reproduced with unwanted interruptions because the audio data receiver **102** often cannot perform the decoding process in time.

FIG. **6** illustrates an example of a conventional audio data/audio-related information recording format **300**. As shown in FIG. **6**, the conventional audio data/audio-related information recording format **300** contains no information indicating the sampling frequency of the original audio data or no information indicating the transfer speed of the transferred audio data. Hence, it is impossible for the audio data

receiver **102** to detect the sampling frequency of the original audio data or the transfer speed of the transferred audio data.

SUMMARY OF INVENTION

According to one aspect of the present invention, there is provided a method for transferring audio data and audio-related information, comprising: a generation step of generating second audio data from first audio data; a transmission step of transmitting the second audio data and audio-related information associated with the second audio data; and a reception step of receiving the second audio data and the audio-related information, wherein the audio-related information includes information representing a sampling frequency of the first audio data.

In one embodiment of the invention, the transmission step comprises a conversion step of converting the sampling frequency of the first audio data into a sampling frequency which is suitable for reproduction at the reception step.

In another embodiment of the invention, the conversion step comprises a down-sampling.

In still another embodiment of the invention, the conversion step comprises an up-sampling.

In still another embodiment of the invention, the conversion step comprises a sampling conversion.

In still another embodiment of the invention, the reception step comprises displaying the sampling frequency of the first audio data on a display.

Alternatively, there is provided a method for transferring audio data and audio-related information, comprising: a transmission step of transmitting the audio data and audio-related information associated with the audio data; and a reception step of receiving the audio data and the audio-related information, wherein the audio-related information includes monitor information indicating whether or not the audio data is capable of being monitored in the reception step.

In one embodiment of the invention, the reception step comprises displaying the monitor information on a display.

In another embodiment of the invention, the method further comprises a muting step of muting the audio data if the monitor information indicates that the audio data is not capable of being monitored in the reception step.

Alternatively, there is provided a method for transferring audio data and audio-related information, comprising: a transmission step of transmitting the audio data and audio-related information associated with the audio data; and a reception step of receiving the audio data and the audio-related information, wherein the audio-related information includes information representing a transfer speed of the audio data.

In one embodiment of the invention, the reception step comprises displaying the transfer speed on a display.

According to another aspect of the present invention, there is provided an audio data/audio-related information transfer apparatus for transferring audio data and audio-related information, comprising: a transmitter for transmitting second audio data and audio-related information associated with the second audio data, the second audio data being generated from first audio data; and a receiver for receiving the second audio data and the audio-related information, wherein the audio-related information includes information representing a sampling frequency of the first audio data.

In one embodiment of the invention, the transmitter converts the sampling frequency of the first audio data into a sampling frequency which is suitable for reproduction by the receiver.

In another embodiment of the invention, wherein the transmitter performs a down-sampling for the sampling frequency of the first audio data.

In still another embodiment of the invention, the transmitter performs an up-sampling for the sampling frequency of the first audio data.

In still another embodiment of the invention, the transmitter performs a sampling conversion for the sampling frequency of the first audio data.

In still another embodiment of the invention, the receiver comprises a display for displaying the sampling frequency of the first audio data.

Alternatively, there is provided an audio data/audio-related information transfer apparatus for transferring audio data and audio-related information, comprising: a transmitter for transmitting audio data and audio-related information associated with the audio data; and a receiver for receiving the audio data and the audio-related information, wherein the audio-related information includes monitor information indicating whether or not the audio data is capable of being monitored by the receiver.

In one embodiment of the invention, the receiver comprises a display for displaying the monitor information.

In another embodiment of the invention, the audio data is muted if the monitor information indicates that the audio data is not capable of being monitored by the receiver.

Alternatively, there is provided an audio data/audio-related information transfer apparatus for transferring audio data and audio-related information, comprising: a transmitter for transmitting audio data and audio-related information associated with the audio data; and a receiver for receiving the audio data and the audio-related information, wherein the audio-related information includes information representing a transfer speed of the audio data.

In one embodiment of the invention, the receiver comprises a display for displaying the transfer speed.

According to another aspect of the present invention, there is provided a transmitter for transmitting second audio data and audio-related information associated with the second audio data, the second audio data being generated from first audio data, wherein the audio-related information includes information representing a sampling frequency of the first audio data.

In one embodiment of the invention, the transmitter converts the sampling frequency of the first audio data into a sampling frequency which is suitable for reproduction by the receiver.

In another embodiment of the invention, the transmitter performs a down-sampling for the sampling frequency of the first audio data.

In still another embodiment of the invention, the transmitter performs an up-sampling for the sampling frequency of the first audio data.

In still another embodiment of the invention, the transmitter performs a sampling conversion for the sampling frequency of the first audio data.

According to another aspect of the present invention, there is provided a transmitter for transmitting audio data and audio-related information associated with the audio data, wherein the audio-related information includes monitor information indicating whether or not the audio data is capable of being monitored by the receiver.

Alternatively, there is provided a transmitter for transmitting audio data and audio-related information associated with the audio data, wherein the audio-related information includes information representing a transfer speed of the audio data.

According to another aspect of the present invention, there is provided a receiver for receiving second audio data and audio-related information associated with the second audio data, the second audio data being generated from first audio data and transmitted from a transmitter, wherein the audio-related information includes information representing a sampling frequency of the first audio data.

In one embodiment of the invention, the receiver comprises a display for displaying the sampling frequency of the first audio data.

Alternatively, there is provided a receiver for receiving audio data and audio-related information associated with the audio data, wherein the audio-related information includes monitor information indicating whether or not the audio data is capable of being monitored by the receiver.

In one embodiment of the invention, the receiver comprises a display for displaying the monitor information.

In another embodiment of the invention, the audio data is muted if the monitor information indicates that the audio data is not capable of being monitored by the receiver.

Alternatively, there is provided a receiver for receiving audio data and audio-related information associated with the audio data, the audio data being transmitted from a transmitter, wherein the audio-related information includes information representing a sampling frequency of the first audio data.

In one embodiment of the invention, the receiver comprises a display for displaying the transfer speed.

Thus, the invention described herein makes possible the advantage of providing a method and apparatus for performing digital transfer of audio data which involves concurrently transferring information indicating a sampling frequency, monitoring ability, and a transfer speed of audio data, thereby enabling a mode of audio reproduction which is in accordance with the particular audio data that is being transferred.

This and other advantages of the present invention will become apparent to those skilled in the art upon reading and understanding the following detailed description with reference to the accompanying figures.

BRIEF DESCRIPTION OF DRAWINGS

FIG. **1** is a block diagram illustrating an audio data transfer apparatus according to an example of the present invention.

FIG. **2** is a diagram illustrating an audio data/audio-related information recording format according to an example of the present invention.

FIG. **3** is a flowchart illustrating a flow of steps performed during original audio data sampling frequency information processing according to an example of the present invention.

FIG. **4** is a flowchart illustrating a flow of steps during monitor information processing according to an example of the present invention.

FIG. **5** is a block diagram illustrating a conventional audio data transfer apparatus.

FIG. **6** is a diagram illustrating a conventional audio data/audio-related information recording format.

DESCRIPTION OF THE PREFERRED EMBODIMENTS

The present invention will be described with respect to an audio data transfer method in accordance with the IEC60958 or IEC61937 transfer standards, with reference to the accompanying figures.

As for the details of the IEC60958 and IEC61937 transfer standards, see Interface for Non-linear PCM Encoded Audio Bitstreams Applying IEC61937, for example.

FIG. **1** illustrates an audio data transfer apparatus **10** according to an example of the present invention. The audio data transfer apparatus **10** includes an audio data transmitter **1** for transmitting audio data and an audio data receiver **2** for receiving the transmitted audio data, the audio data transmitter **1** and the audio data receiver **2** being interconnected via an audio data transfer interface **3** designed for audio data transfer. The audio data transmitter **1** may be a DVD player or a set top box (STB), for example. The audio data receiver **2** may be an AV decoder or a minidisk apparatus, for example. The audio data transfer interface **3** may be a conductive cable or an optical fiber, for example.

In accordance with the audio data transfer apparatus **10**, audio data is first analyzed by a digital audio data attribute analysis section **11**. Then, a digital audio data generation section **12** adds appropriate audio-related information to the audio data (described below). Thereafter, the audio data is modulated by a digital audio data modulation section **13**, and output to the audio data transfer interface **3** so as to be transferred to the audio data receiver **2**.

FIG. **2** illustrates an audio data/audio-related information recording format **200** according to an example of the present invention.

In the audio data/audio-related information recording format **200** shown in FIG. **2**, sampling frequency data of the original audio data are assigned in a region **201** spanning the 36th to 39th bits. Table 3 shows the correspondence between the sampling frequency of the original audio data and bit information.

TABLE 3

Sampling frequency data of original audio data

bit 36 (LSB) - bit 39 (MSB)	sampling frequency
"0000"	44.1 kHz
"0001"	22.05 kHz
"0010"	88.2 kHz
"0100"	48 kHz
"0101"	24 kHz
"0100"	96 kHz
"1100"	32 kHz
"1101"	16 kHz
"1110"	64 kHz
others	undefined

In Table 3, nine sampling frequency values are assigned as the sampling frequency for original audio data: sampling frequencies which are currently in common use (i.e., 32 kHz, 44.1 kHz, and 48 kHz); frequencies twice those values (i.e., 64 kHz, 88.2 kHz, and 96 kHz); and frequencies half those values (i.e., 16 kHz, 22.05 kHz, and 24 kHz).

Since the audio data/audio-related information recording format **200** (FIG. **2**) includes information representing the sampling frequency of the original audio data as illustrated in Table 3, it is possible for the audio data receiver **2** to detect the sampling frequency of the original audio data even in the case where the audio data to be transferred are down-

sampled from the sampling frequencies 96 kHz and 88.2 kHz, which are adopted by the DVD audio standards. Moreover, the audio data/audio-information recording format **200** (FIG. **2**) also supports half-rate frequencies of the MPEG2 frequencies, which are adopted by digital satellite broadcast. Even in the case where the audio data to be transferred are up-sampled from such frequencies, it is possible for the audio data receiver **2** to detect the audio-related information associated with the original audio data.

In the audio data/audio-related information recording format **200** (FIG. **2**), monitor information is assigned in a region **202** at bit **30**. For example, the monitor information can be expressed by one bit as shown in Table 4.

TABLE 4

Examples of monitor bits

bit 30	Monitoring ability
"1"	possible
"0"	impossible

The audio data transmitter **1** sets bit **30** to "1"if it is possible to monitor the audio data, and sets bit **30** to "0"if monitoring ability is not guaranteed (e.g., if it is impossible to monitor the audio data).

Furthermore, in the audio data/audio-related information recording format **200** shown in FIG. **2**, transfer speed information is assigned in a region **203** spanning the 32nd to 35th bits. The transfer speed information may be expressed by four bits as shown in Table 5, for example.

TABLE 5

bit 32 (LSB) - bit 35 (MSB)	transfer speed
"0000"	4 times
"0001"	2 times
"0010"	1 time
"0100"	½ times
"0101"	¼ times

Since the audio data/audio-related information recording format **200** (FIG. **2**) includes information representing the transfer speed information as illustrated in Table 5, it is possible for the audio data receiver **2** to detect the transfer speed of audio data even in the case where the audio data is transferred at an N times or 1/N times speed. In the case where the audio data receiver **2** includes a data processing means which is capable of reproducing audio data at varying speeds, it is possible to vary the reproduction speed of the received audio data on the basis of the detected transfer speed information.

Although Table 5 illustrates 4 times to ¼ times transfer speeds, the present invention is applicable to any transfer speed.

Referring back to FIG. **1**, the audio data, as well as audio-related information including the aforementioned additional information (e.g., sampling frequency information and transfer speed information), is transferred to the audio data receiver **2** in accordance with the audio data transfer apparatus **10**. In the audio data receiver **2**, the received audio data and audio-related information is demodulated by a digital audio data demodulation section **21**, and the audio-related information is analyzed by an additional information analysis section **22**. Then, after the audio data is processed by a data processing section **23**, the audio data is converted into an analog signal by a D/A converter section **24** for output. A display data generation section **25** generates display data based on the audio-related information, which is displayed on a display **26**.

FIG. **3** is a flowchart showing a flow of steps for a processing of the sampling frequency information of original audio data which is performed by the audio data receiver **2**.

At Step **32**, audio-related information including the sampling frequency information of original audio data is read by an additional information analysis section **22** of the audio data receiver **2**. Next, at Step **33**, the additional information analysis section **22** looks up in Table 3 the bit information representing the sampling frequency of the original audio data that has been read, thereby detecting the sampling frequency of the original audio data. At Step **34**, the display data generation section **25** displays the detected sampling frequency of the original audio data on the display **26**.

FIG. **4** is a flowchart showing the monitor information processing performed in the audio data receiver **2**. Specifically, FIG. **4** illustrates monitor information processing performed in the case where the audio-related information does not include transfer speed information, or where the audio data receiver **2** does not include a data processing means which is capable of reproducing audio data at varying speeds.

At Step **42**, audio-related information including the monitor information of original audio data is read by the additional information analysis section **22** of the audio data receiver **2**. Next, at Step **43**, the additional information analysis section **22** detects or determines whether or not the monitor bit (e.g., bit **30**) is "1". If the monitor bit is "1", it is possible to monitor the audio data, so that the transferred data is subjected to appropriate signal processing at the data processing section **23** and the D/A converter section **24**, and thereafter output as audio data at Step **44**. Next, at Step **46**, the display **26** displays information indicating that the audio data can be monitored or is being monitored.

On the other hand, in the case where the audio data is transferred at an increased speed (N times speed) or at a decreased speed (1/N times speed), it is impossible to detect what multiples of the original frequency the data is being transferred at. In such cases, the audio data transmitter **1** transmits "0" as the monitor bit to indicate that the audio data cannot be monitored. When the monitor information indicating that monitoring is impossible is read by the additional information analysis section **22** in the audio data receiver **2**, the audio output is muted at Step **45**, and the display **26** displays information indicating that the audio data cannot be monitored or is being muted at Step **49**.

In the case where the audio-related information includes transfer speed information, the transfer speed information is analyzed by the additional information analysis section **22** and the transfer speed is displayed on the display **26**.

In the case where the audio data receiver **2** includes a data processing means which is capable of reproducing audio data at varying speeds, the speed of the audio data is changed based on the detected transfer speed information, and the audio data is reproduced at the changed speed.

The present invention has been described above with respect to certain embodiments. The sampling frequency information, the monitor information, and the transfer speed information of the original audio data may all be included in the audio data/audio-related information recording format **200**. Alternatively, each type of information may be selectively included depending on the needs of the particular application. For example, the audio data/audio-related infor-

mation recording format **200** may only include the sampling frequency information of the original audio data.

The audio data/audio-related information recording format **200** described above is only illustrative. Any other format may be employed as the audio data/audio-related information recording format **200**.

Although the audio data transfer according to the above example of the present invention is achieved via an audio data transfer interface **3**, audio data may be transferred by any other transfer means that is capable of transferring digital information. For example, it is possible to transfer audio data via a radio transmission/reception means.

The present invention is applicable not only to the IEC60958 and 1 EC61937 transfer standards but also any digital data transfer standards, e.g., IEEE 1394, which is a set of audio video data transfer standards to be enforced in future.

As described above, according to the present invention, an audio data transmitter adds, to audio data to be transferred, information indicating a sampling frequency of the original audio data, monitoring ability (indicating whether or not it is possible to monitor the transferred audio data at an audio data receiver), and a transfer speed of audio data. As a result, various information concerning the transferred data can be detected by the audio data receiver. This enables a mode of audio reproduction which is in accordance with the particular audio data that is being transferred.

Various other modifications will be apparent to and can be readily made by those skilled in the art without departing from the scope and spirit of this invention. Accordingly, it is not intended that the scope of the claims appended hereto be limited to the description as set forth herein, but rather that the claims be broadly construed.

The invention claimed is:

1. A receiver for receiving second audio data and audio-related information associated with the second audio data, the second audio data being generated from first audio data and transmitted from a transmitter comprising:

an analysis section operable to detect a sampling frequency of the first audio data, wherein the audio-related information associated with the second audio data includes information representing the sampling frequency of the first audio data; and

the analysis section detects the sampling frequency of the first audio data based on the information representing the sampling frequency of the first audio data.

2. A receiver according to claim **1**, wherein the receiver further comprises a display operable to display the sampling frequency of the first audio data.

3. A receiver for receiving audio data and audio-related information associated with the audio data, comprising:

an analysis section operable to determine whether or not the audio data is capable of being monitored by the receiver,

wherein the audio-related information includes monitor information indicating whether or not the audio data is capable of being monitored by the receiver, and

the analysis section determines whether or not the audio data is capable of being monitored by the receiver based on the monitor information.

4. A receiver according to claim **3**, wherein the receiver further comprises a display operable to display the monitor information.

5. A receiver according to claim **3**, wherein the audio data is muted if the monitor information indicates that the audio data is not capable of being monitored by the receiver.

6. A receiver for receiving audio data and audio-related Information associated with the audio data, the audio data being transmitted from a transmitter, comprising:

an analysis section operable to detect a transfer speed of the audio data,

wherein the audio-related Information includes information representing the transfer speed of the audio data, and

the analysis section detects the transfer speed of the audio data based on the information representing the transfer speed of the audio data.

7. A receiver according to claim **6**, wherein the receiver further comprises a display operable to display the transfer speed.

* * * * *

JS 44 (Rev. 06/17)

CIVIL COVER SHEET

The JS 44 civil cover sheet and the information contained herein neither replace nor supplement the filing and service of pleadings or other papers as required by law, except as provided by local rules of court. This form, approved by the Judicial Conference of the United States in September 1974, is required for the use of the Clerk of Court for the purpose of initiating the civil docket sheet. *(SEE INSTRUCTIONS ON NEXT PAGE OF THIS FORM.)*

I. (a) PLAINTIFFS

LENOVO (UNITED STATES), INC.

(b) County of Residence of First Listed Plaintiff _____
(EXCEPT IN U.S. PLAINTIFF CASES)

(c) Attorneys *(Firm Name, Address, and Telephone Number)*

Jennifer Ying, Esquire; Morris, Nichols, Arsht & Tunnell LLP
1201 North Market Street; P.O. Box 1347; Wilmington, DE 19899
(302) 658-9200

DEFENDANTS

GENERAL VIDEO, LLC

County of Residence of First Listed Defendant _____
(IN U.S. PLAINTIFF CASES ONLY)

NOTE: IN LAND CONDEMNATION CASES, USE THE LOCATION OF THE TRACT OF LAND INVOLVED.

Attorneys *(If Known)*

II. BASIS OF JURISDICTION *(Place an "X" in One Box Only)*

- ❒ 1 U.S. Government Plaintiff
- ☒ 3 Federal Question *(U.S. Government Not a Party)*
- ❒ 2 U.S. Government Defendant
- ❒ 4 Diversity *(Indicate Citizenship of Parties in Item III)*

III. CITIZENSHIP OF PRINCIPAL PARTIES *(Place an "X" in One Box for Plaintiff and One Box for Defendant)*
(For Diversity Cases Only)

	PTF	DEF		PTF	DEF
Citizen of This State	❒ 1	❒ 1	Incorporated *or* Principal Place of Business In This State	❒ 4	❒ 4
Citizen of Another State	❒ 2	❒ 2	Incorporated *and* Principal Place of Business In Another State	❒ 5	❒ 5
Citizen or Subject of a Foreign Country	❒ 3	❒ 3	Foreign Nation	❒ 6	❒ 6

IV. NATURE OF SUIT *(Place an "X" in One Box Only)*

Click here for: Nature of Suit Code Descriptions.

CONTRACT
- ❒ 110 Insurance
- ❒ 120 Marine
- ❒ 130 Miller Act
- ❒ 140 Negotiable Instrument
- ❒ 150 Recovery of Overpayment & Enforcement of Judgment
- ❒ 151 Medicare Act
- ❒ 152 Recovery of Defaulted Student Loans (Excludes Veterans)
- ❒ 153 Recovery of Overpayment of Veteran's Benefits
- ❒ 160 Stockholders' Suits
- ❒ 190 Other Contract
- ❒ 195 Contract Product Liability
- ❒ 196 Franchise

REAL PROPERTY
- ❒ 210 Land Condemnation
- ❒ 220 Foreclosure
- ❒ 230 Rent Lease & Ejectment
- ❒ 240 Torts to Land
- ❒ 245 Tort Product Liability
- ❒ 290 All Other Real Property

TORTS

PERSONAL INJURY
- ❒ 310 Airplane
- ❒ 315 Airplane Product Liability
- ❒ 320 Assault, Libel & Slander
- ❒ 330 Federal Employers' Liability
- ❒ 340 Marine
- ❒ 345 Marine Product Liability
- ❒ 350 Motor Vehicle
- ❒ 355 Motor Vehicle Product Liability
- ❒ 360 Other Personal Injury
- ❒ 362 Personal Injury - Medical Malpractice

PERSONAL INJURY
- ❒ 365 Personal Injury - Product Liability
- ❒ 367 Health Care/ Pharmaceutical Personal Injury Product Liability
- ❒ 368 Asbestos Personal Injury Product Liability

PERSONAL PROPERTY
- ❒ 370 Other Fraud
- ❒ 371 Truth in Lending
- ❒ 380 Other Personal Property Damage
- ❒ 385 Property Damage Product Liability

CIVIL RIGHTS
- ❒ 440 Other Civil Rights
- ❒ 441 Voting
- ❒ 442 Employment
- ❒ 443 Housing/ Accommodations
- ❒ 445 Amer. w/Disabilities - Employment
- ❒ 446 Amer. w/Disabilities - Other
- ❒ 448 Education

PRISONER PETITIONS

Habeas Corpus:
- ❒ 463 Alien Detainee
- ❒ 510 Motions to Vacate Sentence
- ❒ 530 General
- ❒ 535 Death Penalty

Other:
- ❒ 540 Mandamus & Other
- ❒ 550 Civil Rights
- ❒ 555 Prison Condition
- ❒ 560 Civil Detainee - Conditions of Confinement

FORFEITURE/PENALTY
- ❒ 625 Drug Related Seizure of Property 21 USC 881
- ❒ 690 Other

LABOR
- ❒ 710 Fair Labor Standards Act
- ❒ 720 Labor/Management Relations
- ❒ 740 Railway Labor Act
- ❒ 751 Family and Medical Leave Act
- ❒ 790 Other Labor Litigation
- ❒ 791 Employee Retirement Income Security Act

IMMIGRATION
- ❒ 462 Naturalization Application
- ❒ 465 Other Immigration Actions

BANKRUPTCY
- ❒ 422 Appeal 28 USC 158
- ❒ 423 Withdrawal 28 USC 157

PROPERTY RIGHTS
- ❒ 820 Copyrights
- ☒ 830 Patent
- ❒ 835 Patent - Abbreviated New Drug Application
- ❒ 840 Trademark

SOCIAL SECURITY
- ❒ 861 HIA (1395ff)
- ❒ 862 Black Lung (923)
- ❒ 863 DIWC/DIWW (405(g))
- ❒ 864 SSID Title XVI
- ❒ 865 RSI (405(g))

FEDERAL TAX SUITS
- ❒ 870 Taxes (U.S. Plaintiff or Defendant)
- ❒ 871 IRS—Third Party 26 USC 7609

OTHER STATUTES
- ❒ 375 False Claims Act
- ❒ 376 Qui Tam (31 USC 3729(a))
- ❒ 400 State Reapportionment
- ❒ 410 Antitrust
- ❒ 430 Banks and Banking
- ❒ 450 Commerce
- ❒ 460 Deportation
- ❒ 470 Racketeer Influenced and Corrupt Organizations
- ❒ 480 Consumer Credit
- ❒ 490 Cable/Sat TV
- ❒ 850 Securities/Commodities/ Exchange
- ❒ 890 Other Statutory Actions
- ❒ 891 Agricultural Acts
- ❒ 893 Environmental Matters
- ❒ 895 Freedom of Information Act
- ❒ 896 Arbitration
- ❒ 899 Administrative Procedure Act/Review or Appeal of Agency Decision
- ❒ 950 Constitutionality of State Statutes

V. ORIGIN *(Place an "X" in One Box Only)*

- ☒ 1 Original Proceeding
- ❒ 2 Removed from State Court
- ❒ 3 Remanded from Appellate Court
- ❒ 4 Reinstated or Reopened
- ❒ 5 Transferred from Another District *(specify)*
- ❒ 6 Multidistrict Litigation - Transfer
- ❒ 8 Multidistrict Litigation - Direct File

VI. CAUSE OF ACTION

Cite the U.S. Civil Statute under which you are filing ***(Do not cite jurisdictional statutes unless diversity)***:
28 U.S.C. § 2201 et seq.; 35 U.S.C. § 1 et seq.

Brief description of cause:
Patent Declaratory Judgment Action

VII. REQUESTED IN COMPLAINT:

❒ CHECK IF THIS IS A **CLASS ACTION** UNDER RULE 23, F.R.Cv.P.

DEMAND $

CHECK YES only if demanded in complaint:
JURY DEMAND: ☒ Yes ❒ No

VIII. RELATED CASE(S) IF ANY

(See instructions): JUDGE _____ DOCKET NUMBER *See attached list

DATE 08/22/2025

SIGNATURE OF ATTORNEY OF RECORD /s/ Jennifer Ying

FOR OFFICE USE ONLY

RECEIPT # _____ AMOUNT _____ APPLYING IFP _____ JUDGE _____ MAG. JUDGE _____

LIST OF RELATED CASES

1) *General Video, LLC v. Lenovo Group Limited*, C.A. No. 5:24-122 (RWS) (EDTX) (Lead Case)

2) *General Video, LLC v. HP Inc.,* C.A. No. 5:24-123 (RWS) (EDTX)

3) *General Video, LLC v. Dell Inc., et al.*, C.A. No. 5:24-124 (RWS) (EDTX) (closed 12/13/2024)

4) *General Video, LLC v. Acer Inc.,* C.A. No. 5:24-125 (RWS) (EDTX) (closed 7/28/2025)

5) *General Video, LLC v. ASUSTEK Computer, et al.*, C.A. No. 5:24-126 (RWS) (EDTX)

6) *General Video, LLC v. Dell Inc., et al.*, C.A. No. 1:24-1530 (ADA) (WDTX)

7) *Lattice Semiconductor Corporation v. Technicolor SA, et al.*, C.A. No. 4:16-668 (JSW) (NDCA) (closed 9/6/2017)