US010639404B2

(12) **United States Patent**
Lichtenstein

(10) **Patent No.: US 10,639,404 B2**
(45) **Date of Patent: May 5, 2020**

(54) **WOUND DRESSING**

(75) Inventor: **Isaac Lichtenstein**, Brooklyn, NY (US)

(73) Assignee: **WOUND HEALING TECHNOLOGIES, LLC**, Brooklyn, NY (US)

(*) Notice: Subject to any disclaimer, the term of this patent is extended or adjusted under 35 U.S.C. 154(b) by 0 days.

(21) Appl. No.: **13/152,446**

(22) Filed: **Jun. 3, 2011**

(65) **Prior Publication Data**

US 2011/0301556 A1 Dec. 8, 2011

Related U.S. Application Data

(63) Continuation of application No. 61/350,988, filed on Jun. 3, 2010.

(51) **Int. Cl.**

A61F 13/00	(2006.01)
A61M 1/00	(2006.01)
A61F 13/06	(2006.01)

(52) **U.S. Cl.**

CPC ***A61M 1/0088*** (2013.01); ***A61F 13/00068*** (2013.01); *A61F 13/069* (2013.01); *A61F 2013/0054* (2013.01); *A61F 2013/00157* (2013.01); *A61F 2013/00174* (2013.01); *A61F 2013/00412* (2013.01); *A61F 2013/00519* (2013.01); *A61F 2013/00536* (2013.01)

(58) **Field of Classification Search**

CPC A61M 1/0088; A61M 1/0023; A61M 1/0058; A61M 1/0084; A61M 27/00; A61M 1/009; A61F 13/0068; A61F 13/023; A61F 2013/00536; A61F 2013/0054; A61F 2013/00748; A61F 13/00068; A61F 13/0023; A61F 2013/00174

USPC 604/319

See application file for complete search history.

(56) **References Cited**

U.S. PATENT DOCUMENTS

4,969,880 A *	11/1990	Zamierowski	.....	604/305
5,100,396 A	3/1992	Zamierowski		
5,261,893 A	11/1993	Zamierowski		
5,527,293 A	6/1996	Zamierowski		
5,636,643 A	6/1997	Argenta et al.		
5,645,081 A	7/1997	Argenta et al.		

(Continued)

OTHER PUBLICATIONS

"Hydrocolloid dressing," Wikipedia, Aug. 28, 2013, San Francisco, California.

Primary Examiner — Ariana Zimbouski

(74) *Attorney, Agent, or Firm* — Weiss & Arons LLP

(57) **ABSTRACT**

Apparatus and methods for providing a wound dressing are provided. A wound dressing according to the invention may preferably include a wound-fluid negative pressure treatment ("NPT") drain and a vacuum/drainage tube comprising a terminus associated with the NPT drain. The dressing may also include a fluid-absorbing/transferring material. The dressing may also include a contour-conforming draping layer for draping over a wound-bed. The draping layer may be in contact with at least a portion of the fluid-absorbing/transferring material. The dressing may also include a vapor sealant sheet that overlies at least a portion of the fluid-absorbing/transferring layer. The material may also include a tube-anchorage component that is in contact with at least a portion of the vapor sealant sheet. The tube-anchorage component may mechanically maintain placement of the NPT drain within the fluid-absorbing/transferring material.

13 Claims, 16 Drawing Sheets

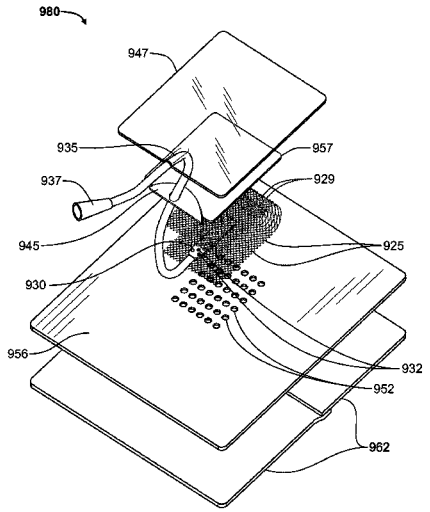

(56) **References Cited**

U.S. PATENT DOCUMENTS

5,951,505 A * 9/1999 Gilman et al. 602/41
6,071,267 A * 6/2000 Zamierowski 604/289
6,117,111 A 9/2000 Fleischmann
6,142,982 A 11/2000 Hunt et al.
6,345,623 B1 2/2002 Heaton et al.
6,398,767 B1 6/2002 Fleischmann
6,553,998 B2 4/2003 Heaton et al.
6,685,681 B2 2/2004 Lockwood et al.
6,814,079 B2 11/2004 Heaton et al.
7,004,915 B2 2/2006 Boynton et al.
7,216,651 B2 5/2007 Argenta et al.
7,338,482 B2 3/2008 Lockwood et al.
7,520,872 B2 * 4/2009 Biggie et al. 604/319
7,615,036 B2 11/2009 Joshi et al.
7,779,625 B2 8/2010 Joshi et al.
7,951,100 B2 5/2011 Hunt et al.
8,152,785 B2 4/2012 Vitaris
8,168,848 B2 5/2012 Lockwood et al.
8,187,210 B2 5/2012 Hunt et al.
8,188,331 B2 5/2012 Barta et al.
8,202,261 B2 6/2012 Kazala, Jr. et al.
8,460,255 B2 6/2013 Joshi et al.
8,663,198 B2 3/2014 Buan et al.
8,945,074 B2 2/2015 Buan et al.
9,058,634 B2 6/2015 Buan et al.
9,067,003 B2 6/2015 Buan et al.
2004/0073151 A1 * 4/2004 Weston 602/41
2004/0243073 A1 * 12/2004 Lockwood et al. 604/313
2005/0228330 A1 * 10/2005 Barnes et al. 602/54
2007/0032755 A1 * 2/2007 Walsh 602/2
2009/0234306 A1 * 9/2009 Vitaris 604/304
2009/0299251 A1 12/2009 Buan
2009/0299306 A1 12/2009 Buan
2010/0121229 A1 * 5/2010 Argenta A61B 17/00234 601/6
2010/0305526 A1 * 12/2010 Robinson A61M 1/0001 604/319
2011/0034892 A1 2/2011 Buan
2011/0130712 A1 * 6/2011 Topaz 604/23
2011/0144599 A1 6/2011 Croizat et al.
2011/0172612 A1 7/2011 Greener et al.
2011/0196278 A1 8/2011 Svedman et al.
2012/0041403 A1 2/2012 Bennett et al.
2012/0197229 A1 8/2012 Buan et al.
2013/0096519 A1 * 4/2013 Blott et al. 604/319
2013/0150814 A1 6/2013 Buan

* cited by examiner

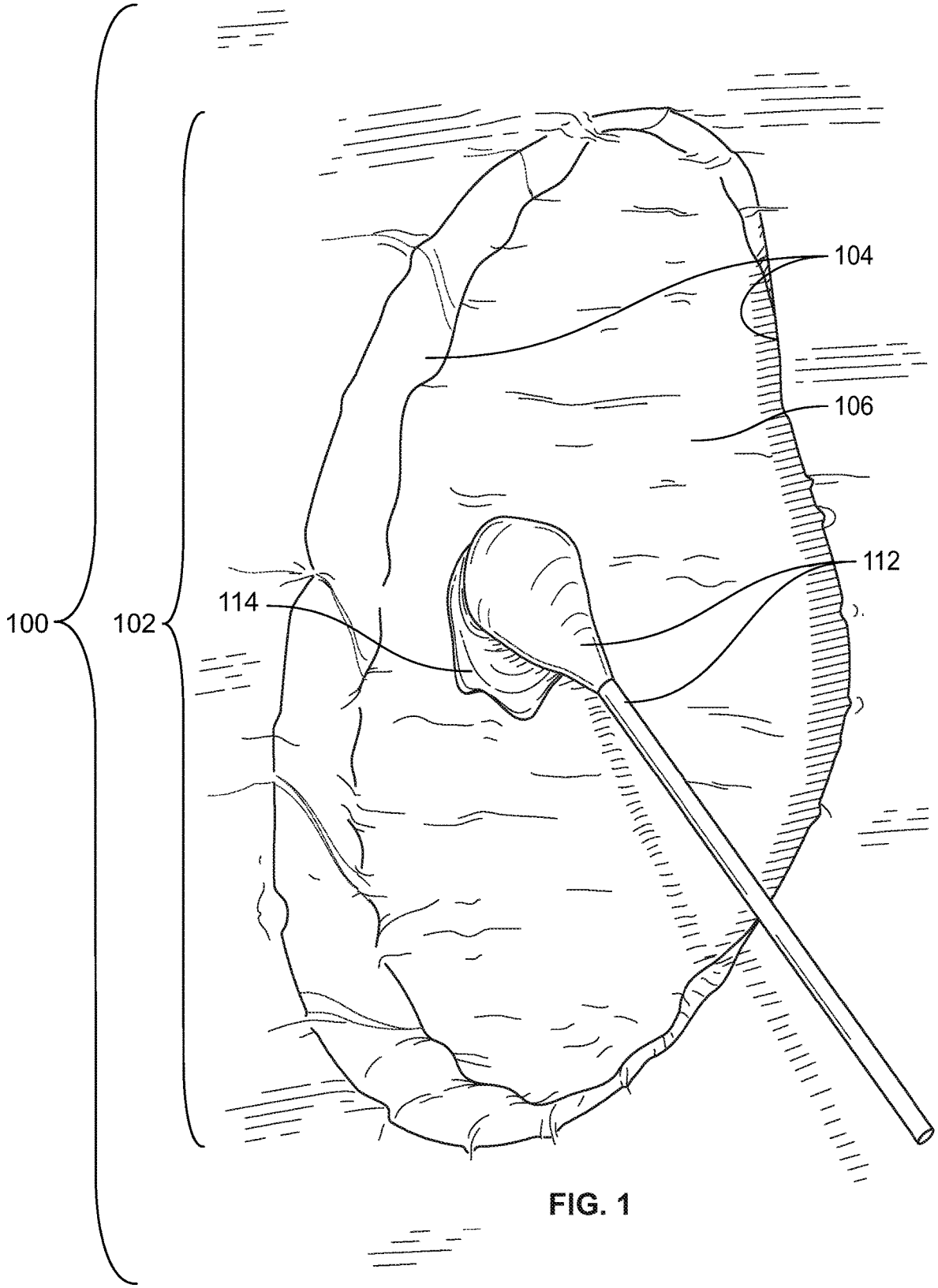

FIG. 1

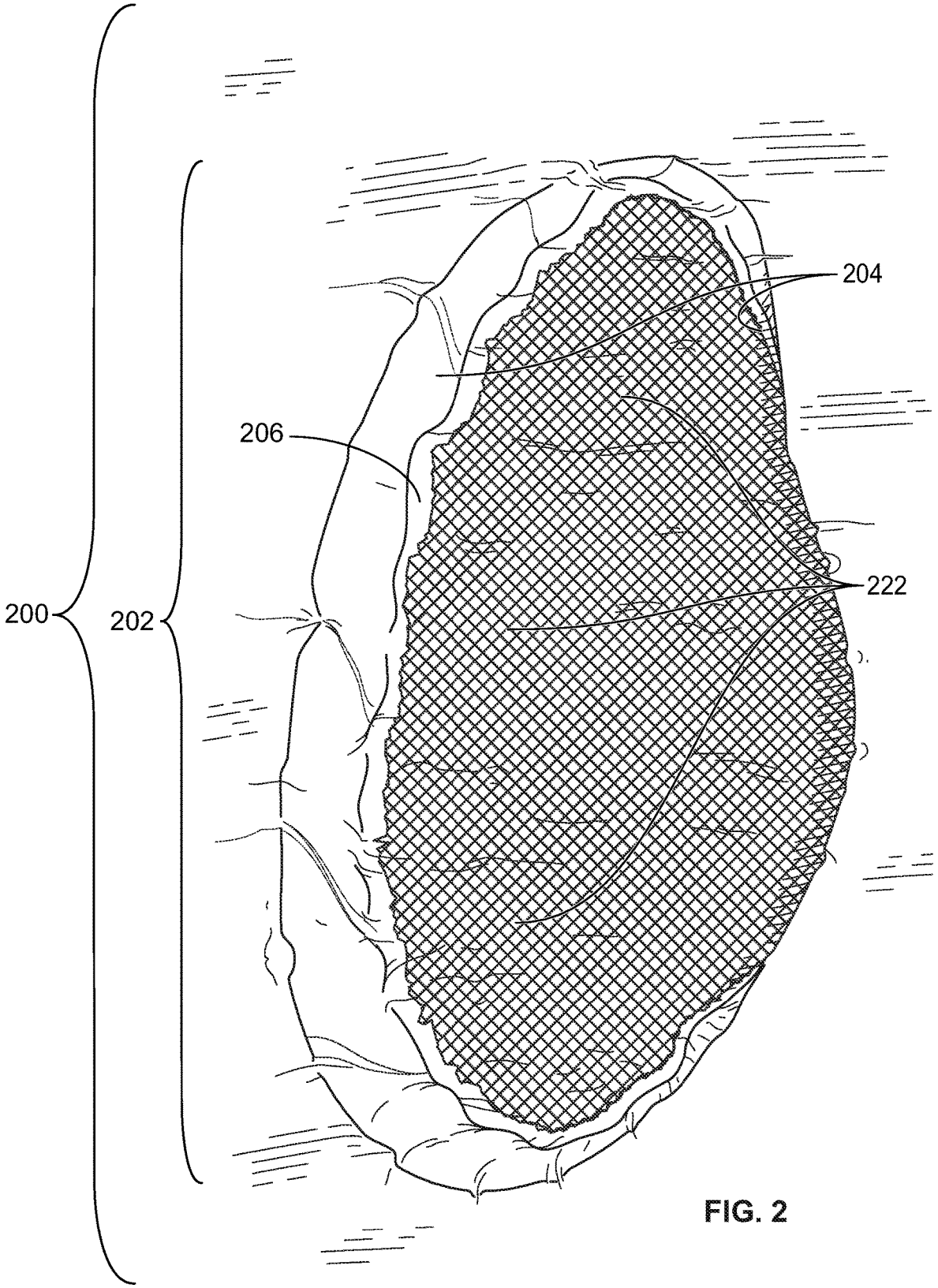

FIG. 2

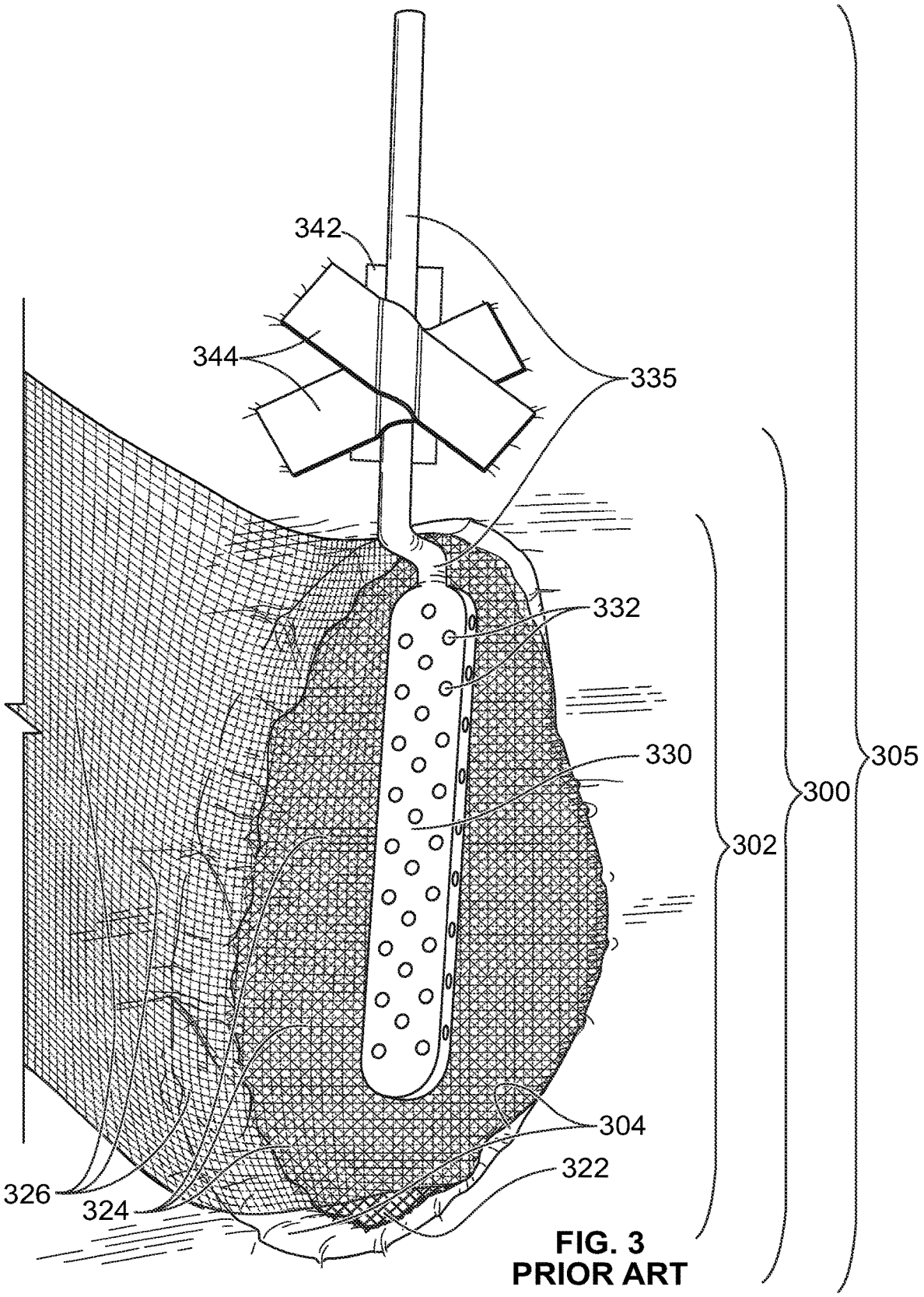

FIG. 3
PRIOR ART

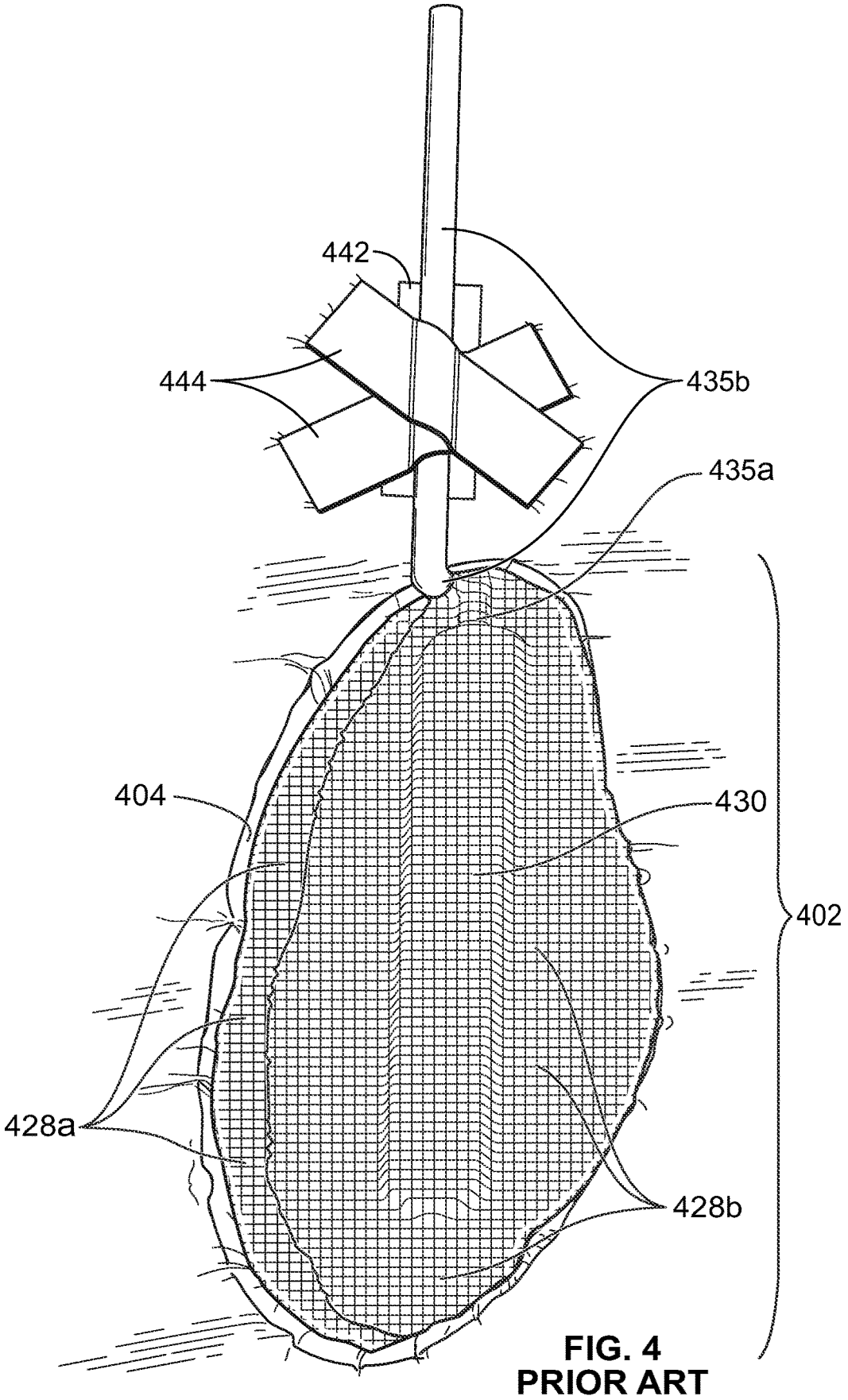

FIG. 4
PRIOR ART

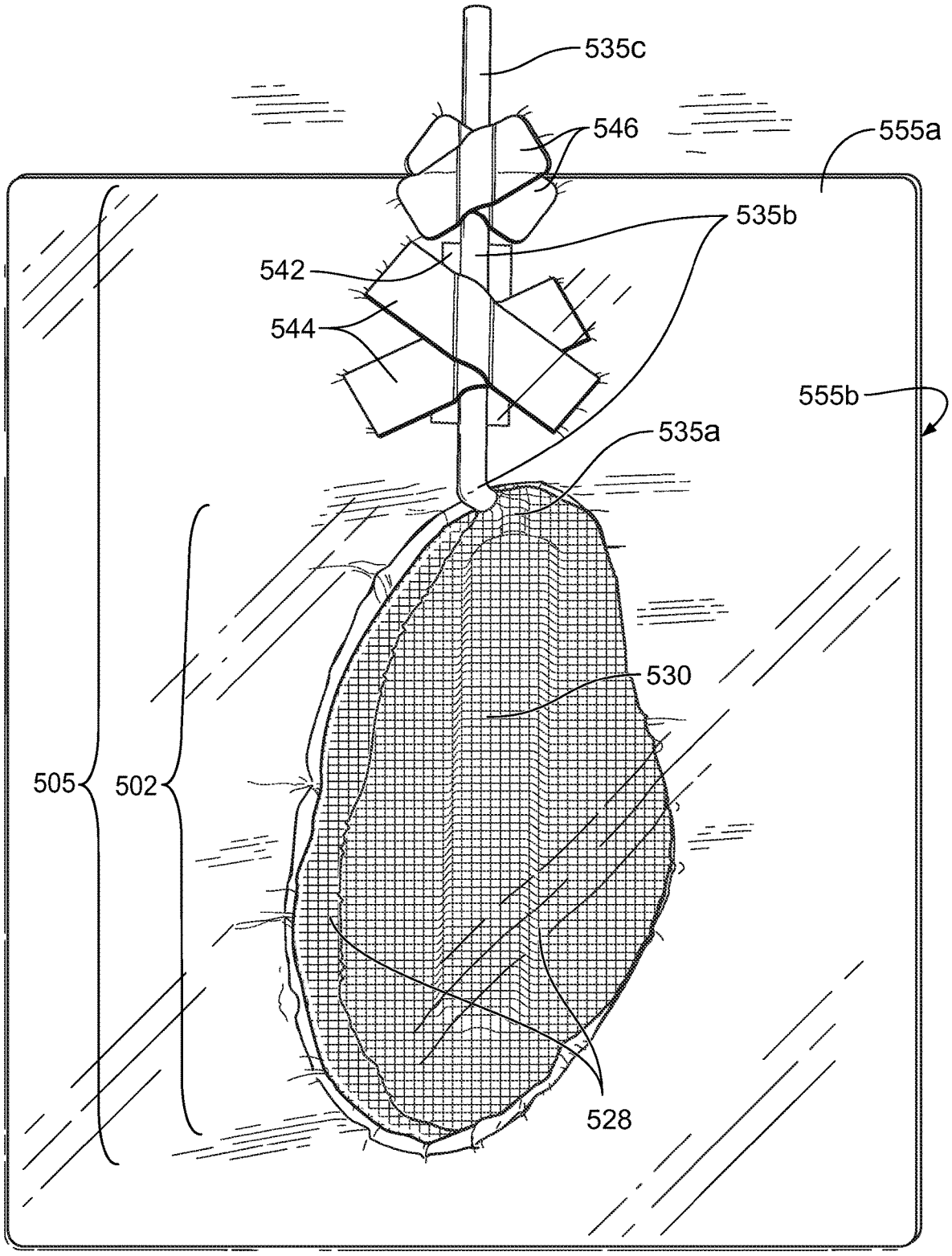

FIG. 5
PRIOR ART

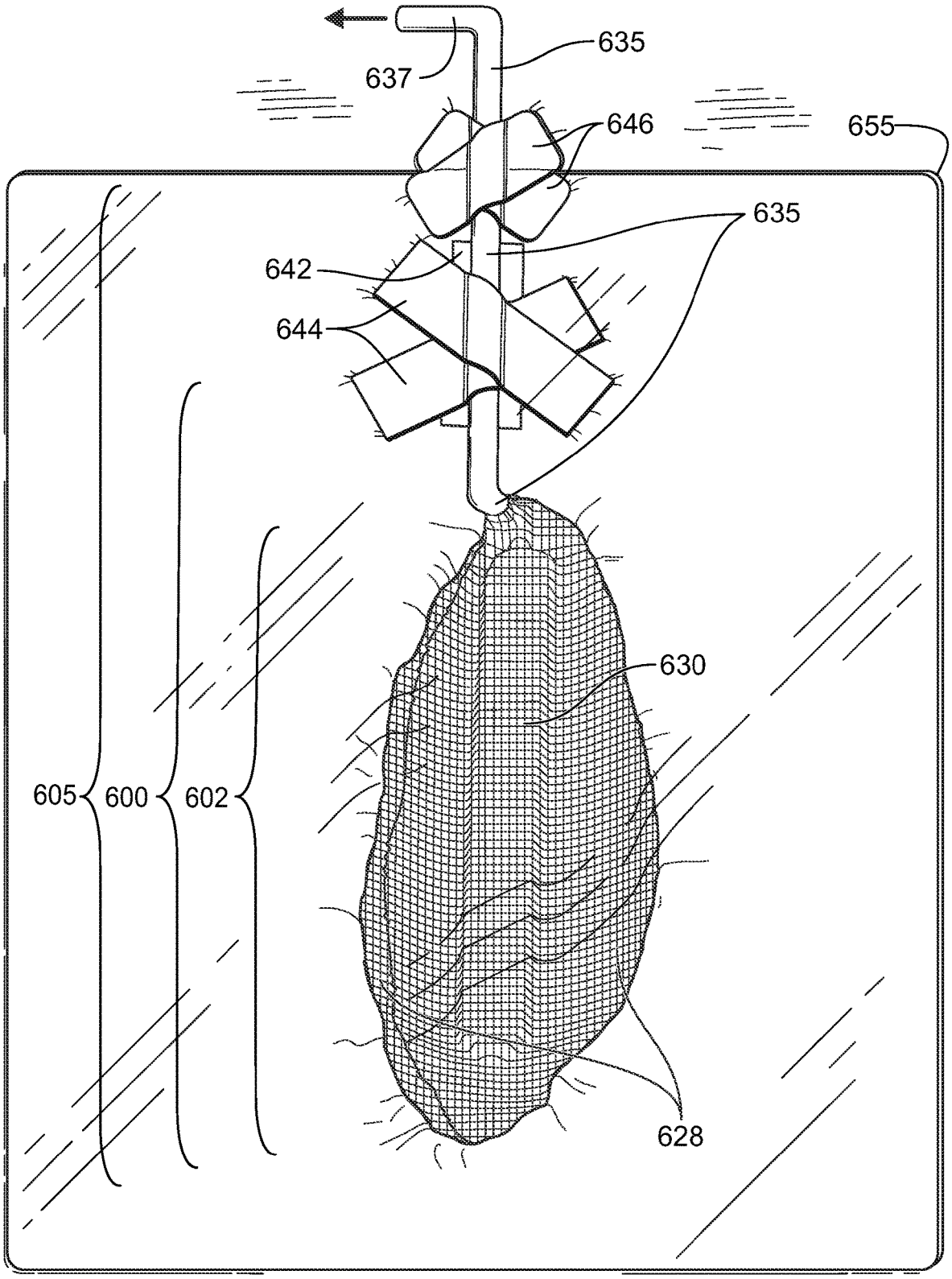

FIG. 6
PRIOR ART

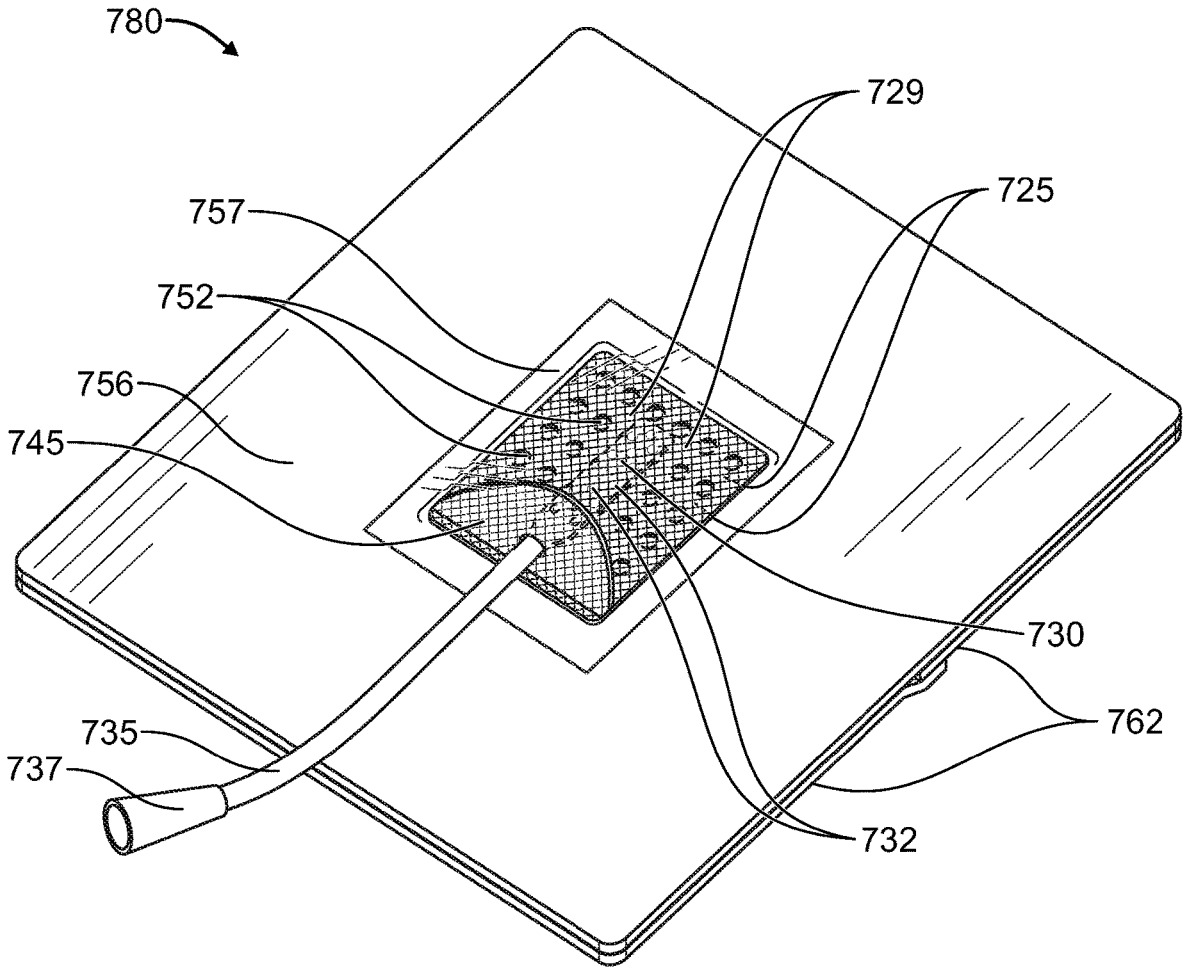

FIG. 7A

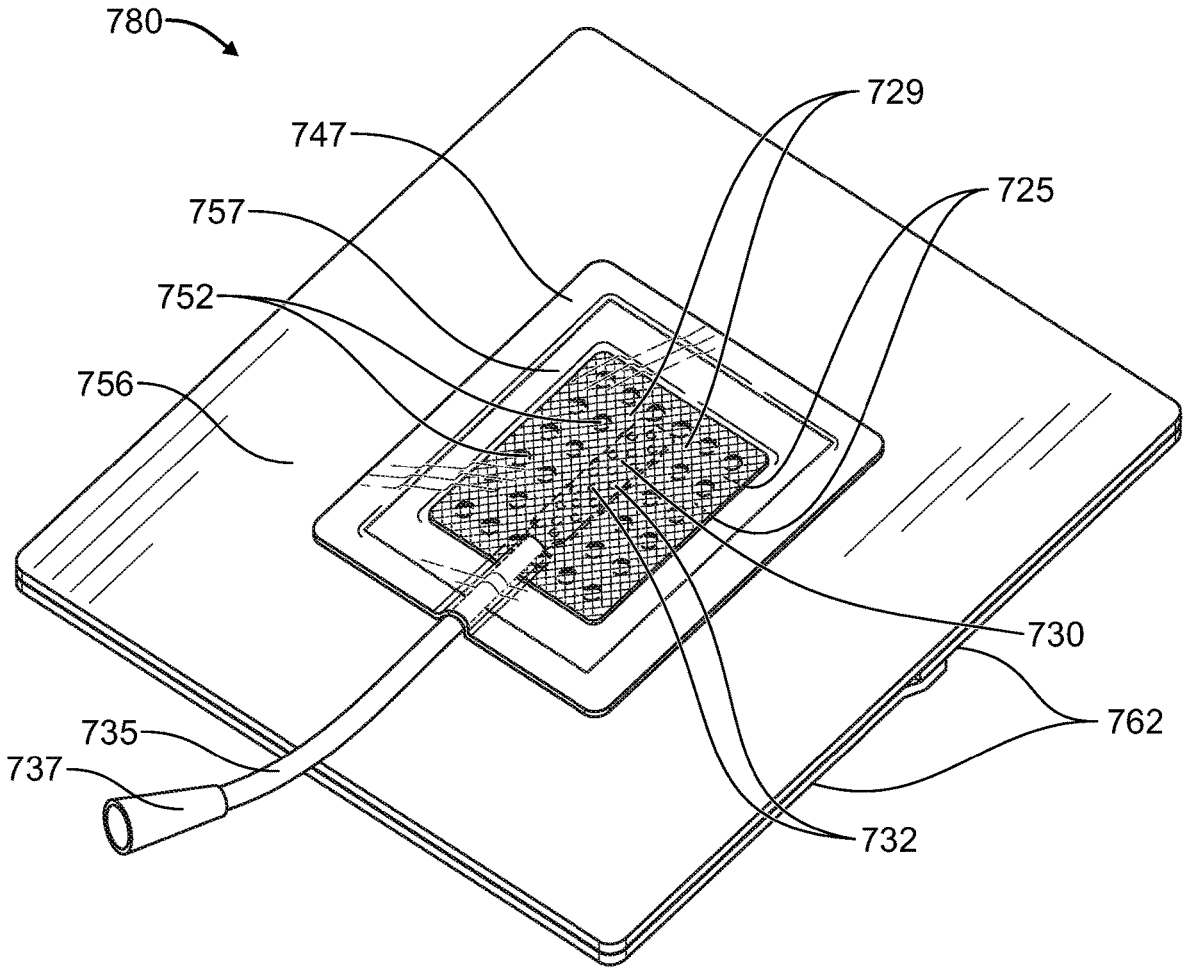

FIG. 7B

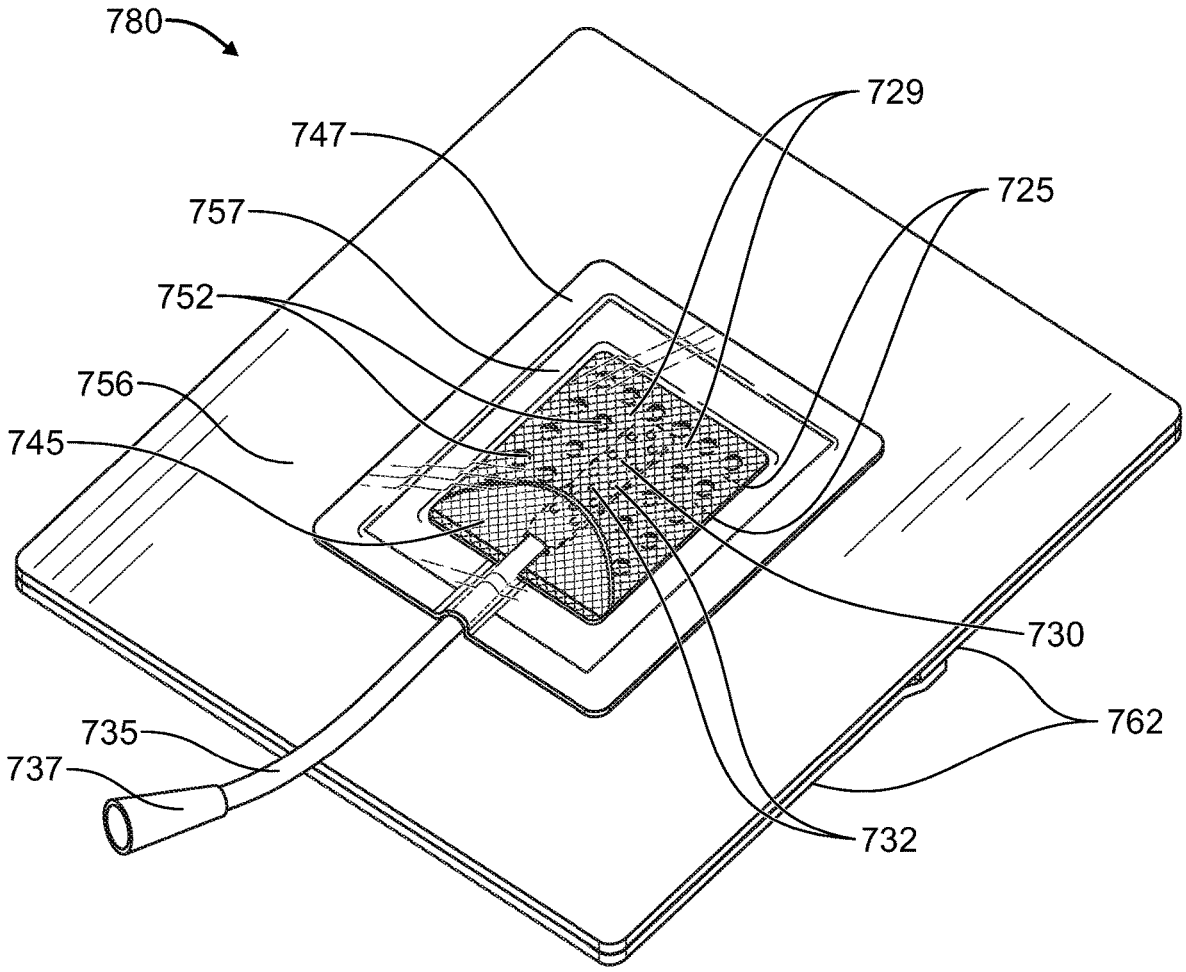

FIG. 7C

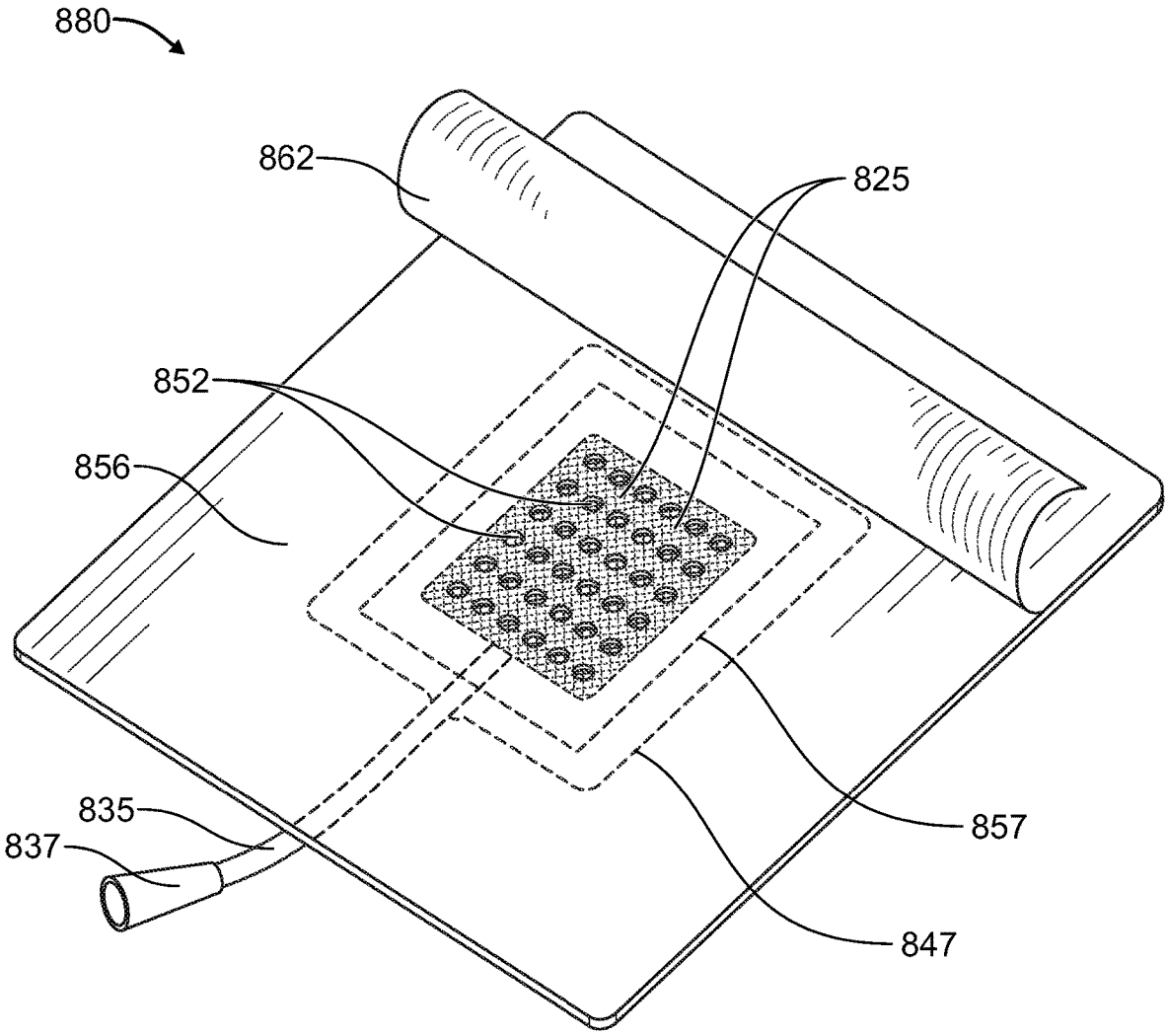

FIG. 8

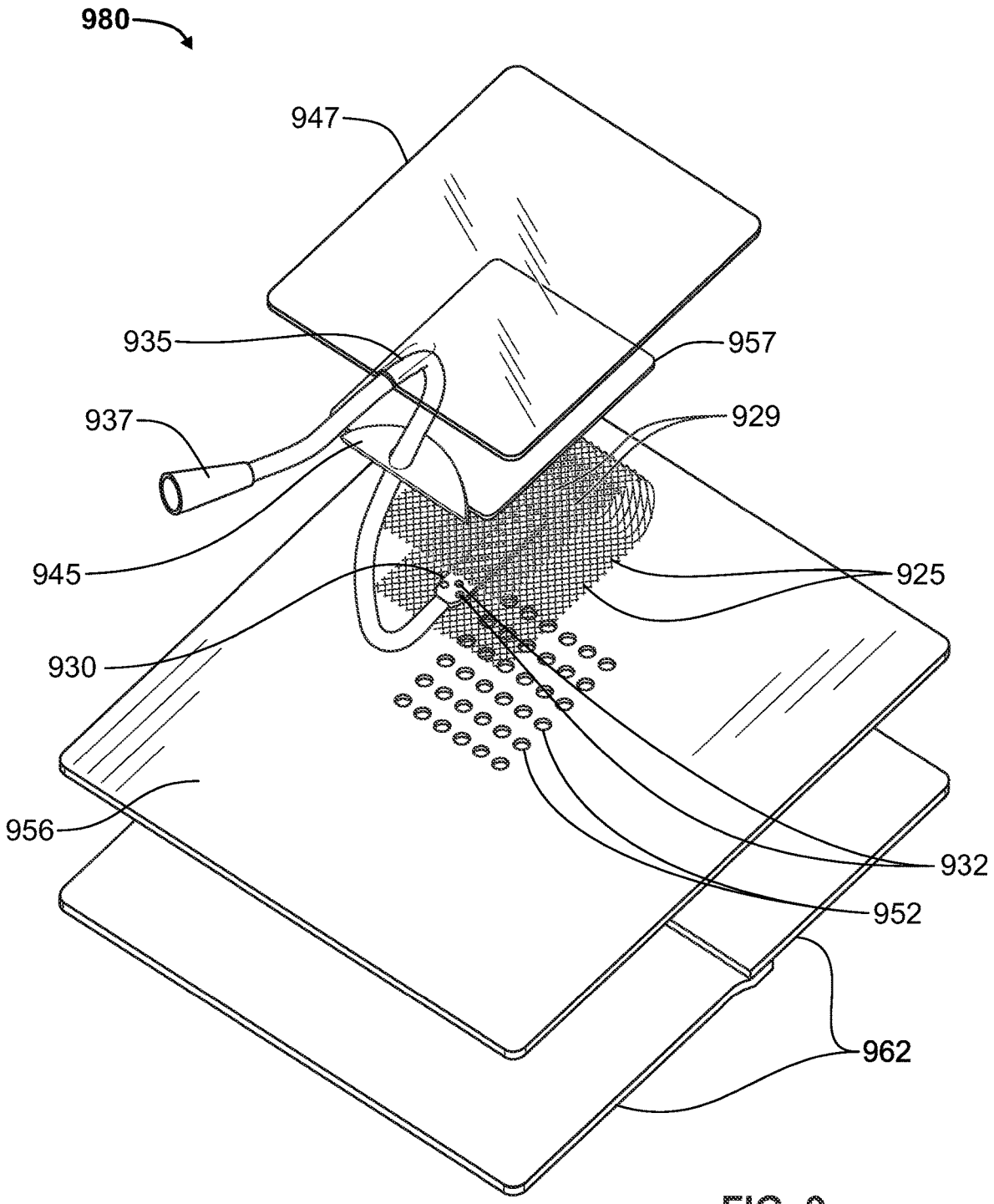

FIG. 9

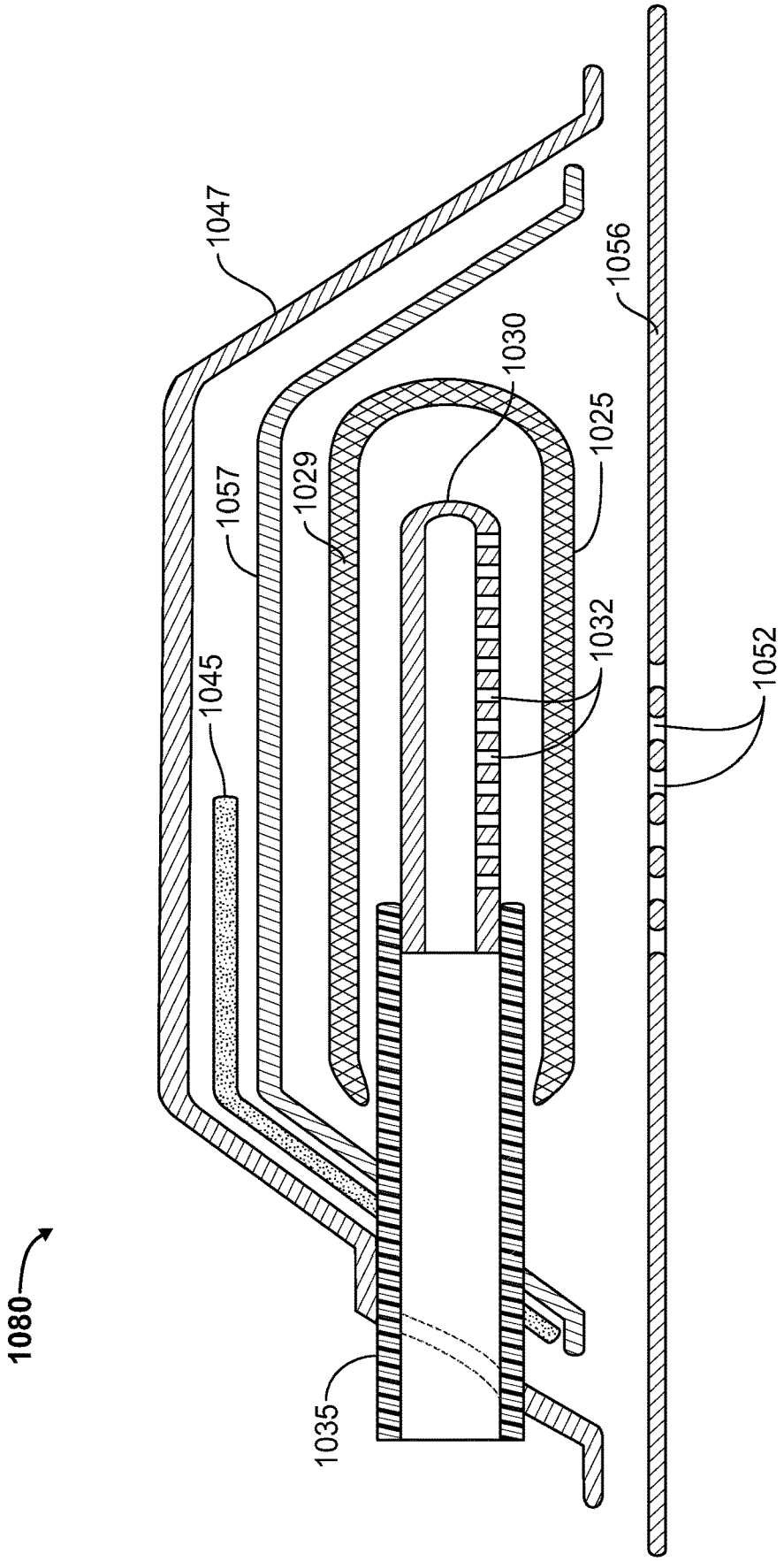

FIG. 10

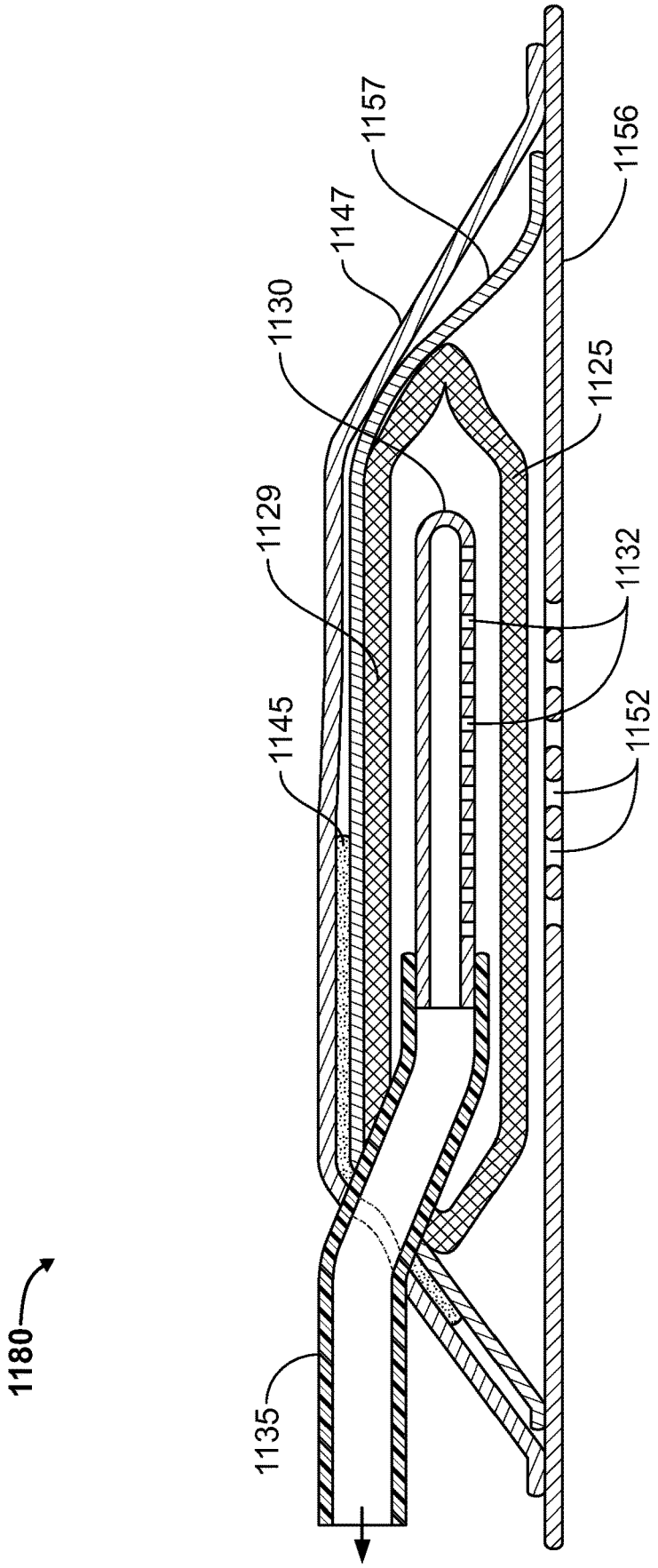

FIG. 11

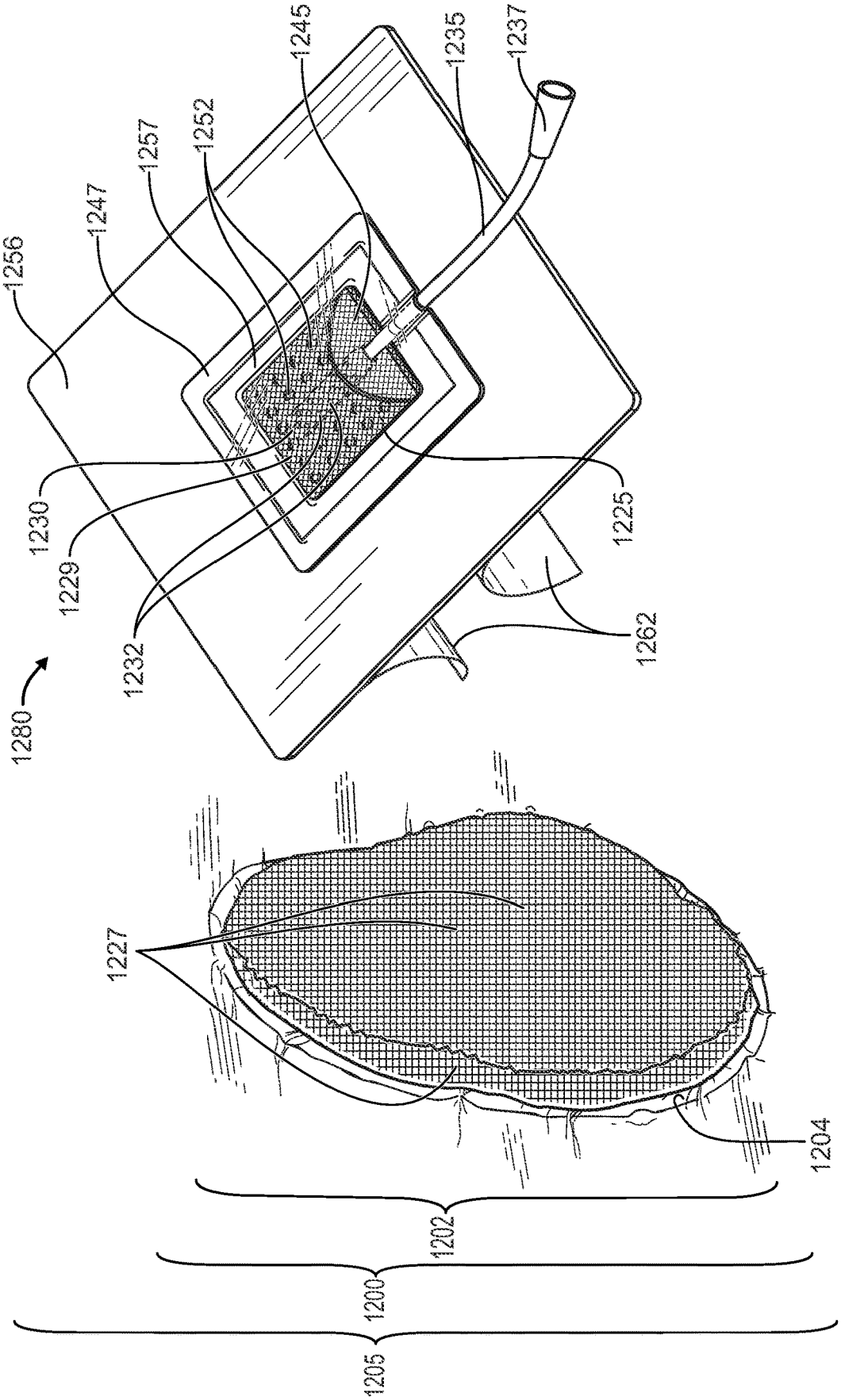
1280
1256
1247
1257
1252
1245
1235
1237
1230
1229
1232
1225
1262
1227
1204
1202
1200
1205

FIG. 12

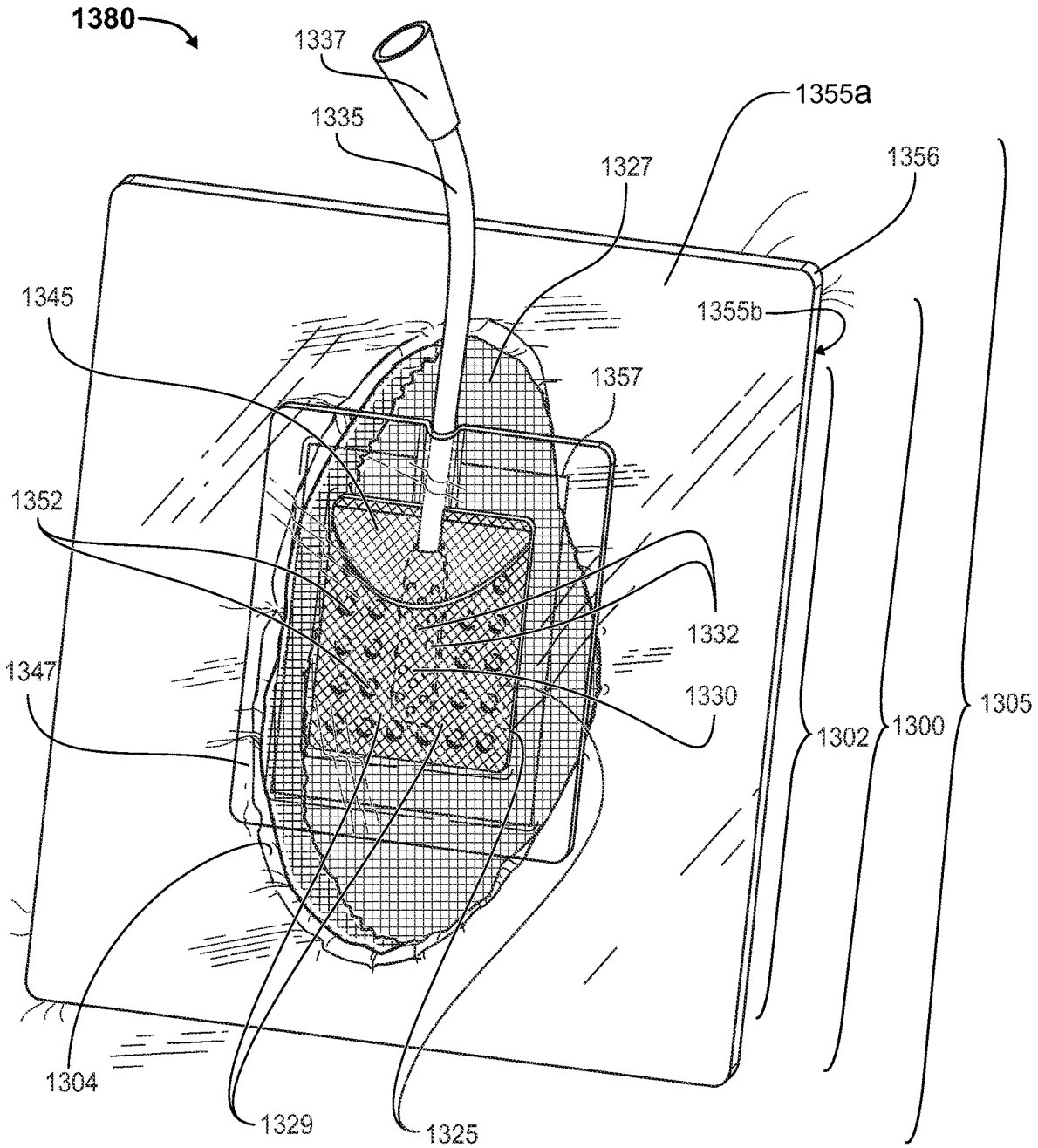
1380
1337
1335
1355a
1327
1356
1345
1355b
1357
1352
1332
1347
1330
1302
1300
1305
1304
1329
1325

FIG. 13

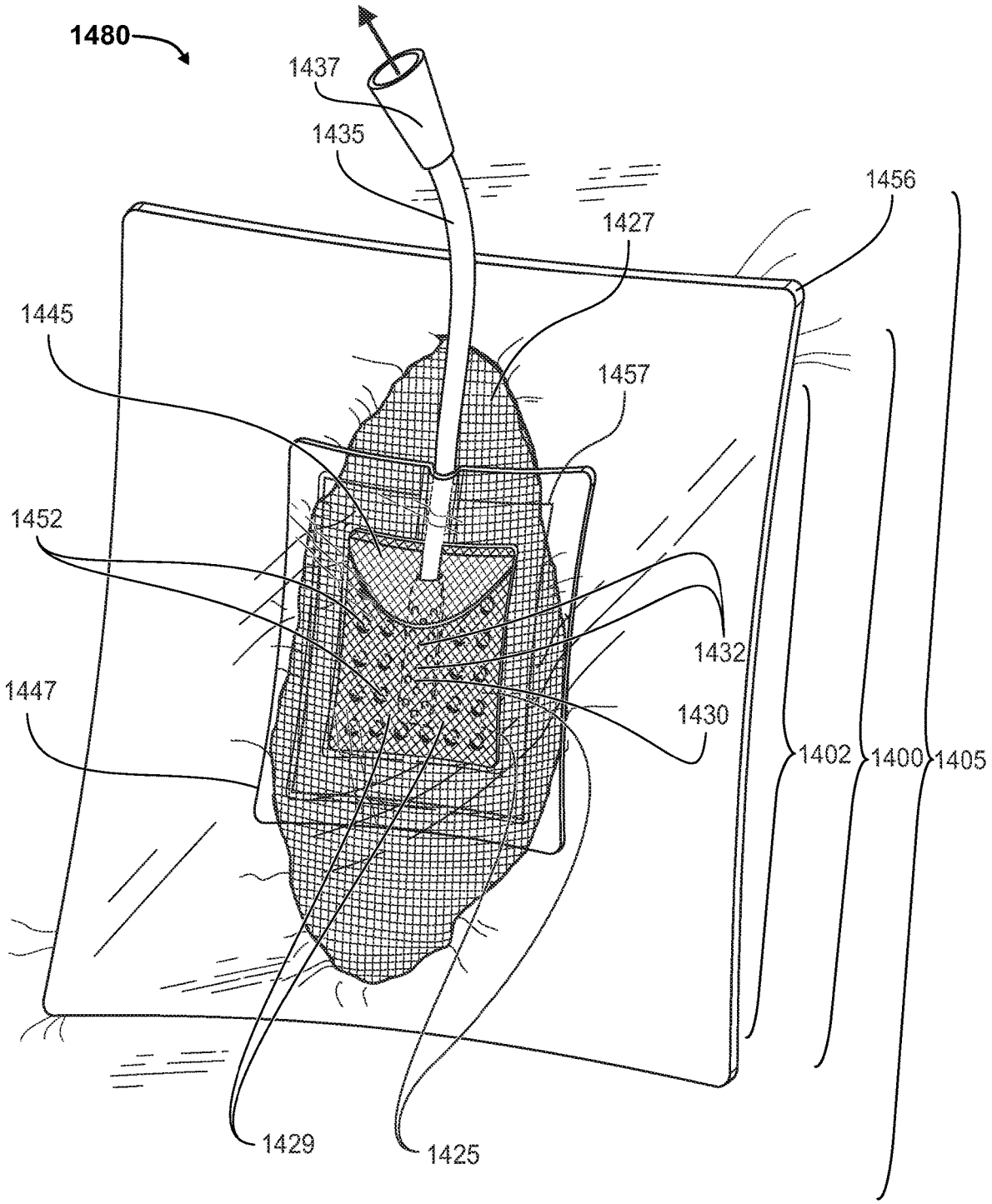
1480
1437
1435
1456
1427
1445
1457
1452
1432
1447
1430
1402
1400
1405
1429
1425

FIG. 14

WOUND DRESSING

CROSS-REFERENCE TO RELATED APPLICATION

This application is a non-provisional application of U.S. Provisional Application No. 61/350,988, filed on Jun. 3, 2010, entitled "Wound Dressing."

FIELD OF TECHNOLOGY

Aspects of the disclosure relate to systems and methods for therapeutic dressing of medical wounds. In particular, the disclosure relates to apparatus and methods for therapeutic dressing of wounds for their treatment by negative pressure.

BACKGROUND

Prior to applying a negative pressure dressing, a wound (or other opened-flesh medical condition) is typically cleansed and debrided. Therapeutic treatment of a wound often also involves packing the wound-bed with sterile material. Such material may include gauze, foam or other suitable fluid-absorbing/transferring materials. Application of negative pressure to the packed wound-bed promotes wound-healing.

The term "negative pressure" as used herein refers to lower than ambient air pressure. Widespread clinical experience sets the range of values of negative pressure utilized in wound treatment. Negative pressure treatment (hereinafter referred to as NPT) of wounds has been practiced for more than a decade.

The clinically demonstrated promotion of wound-healing that may be achieved through NPT requires successful practitioner-preparation of the wound and surrounding site. Conventionally, preparation of a wound for NPT complicates the wound-packing procedure for both practitioner and patient.

In conventional preparation for NPT, a practitioner needs to pause the wound-packing procedure at an intermediate stage, with the base of the prepared wound covered but with the wound-bed only partly packed. An appropriately sized wound-fluid NPT drain is introduced into the partly packed wound-bed.

A typical wound-fluid NPT drain may include a hollow tube-like structure featuring transversely perforated walls. Such perforation provides access to the drain's hollow center, which may or may not be capped on one end. A tube for application of negative pressure and for drainage of exuded wound-fluid typically attaches to, or is integrally continuous with, the other end of the drain. This vacuum/drainage tube exits the wound-bed and extends beyond it.

The NPT drain is associated in situ with the initial packing material within the wound-bed. More specifically, the NPT drain is typically placed upon the gauze or inserted within the foam. Location and orientation of the drain within the confines of the wound-bed may affect the efficiency of drainage and the quality of wound-closing.

To maintain the NPT drain's placement and orientation, anchorage of the exiting vacuum/drainage tube may be required. The exiting tube is preferably anchored in close proximity to the wound. Typically, the vacuum/drainage tube is taped to the patient's perilesional and/or other wound-proximal skin.

Conventionally, maintenance of NPT drain-and-tube emplacement and orientation may complicate the remaining stages of the wound-packing procedure. A practitioner laying the remaining packing material into the wound-bed may need to exercise caution to accommodate the presence of the NPT drain-and-tube. Even with the vacuum/drainage tube skin-anchored close to the wound, manipulations involved in completing the wound-packing procedure may deleteriously shift the NPT drain-and-tube.

The fully-packed wound-bed, with the emplaced NPT drain and the exiting vacuum/drainage tube, is completely draped with a flexible covering. The draping material closely adheres to sufficient skin area surrounding the wound-site to produce a perimeter seal that remains airtight under NPT conditions of negative wound-bed air pressure.

Particular wound-sites featuring high degrees of local moistness and/or contouring, may present challenges to producing effective airtight perimeter sealing. Practitioner-preparation of the wound for NPT requires smoothly adhering the surface-conforming draping material to the wider site's contours, with minimal disturbance of the packing, drain or tube. Such a procedure may be difficult and time-consuming.

The draping must allow for egress of the vacuum/drainage tube from the vicinity of the wound-site. The tube-egress may be sealed at the edge of the draping material by taping both the draping material and the vacuum/drainage tube at the site of tube-egress to the patient's skin. Such additional taping may be painful to the patient.

The end of the vacuum/drainage tube may be configured to connect to tubing leading to a suitable NPT vacuum controller. Wound-fluid exudate is drained from the sealed, packed wound-bed through the tubing, to a collection/disposal vessel associated with the vacuum controller. Prior to its disposal, collected exudate may be monitored as to volume, volume per time, fluid and cellular composition, bacterial count and/or other parameter(s) of clinical interest.

The therapeutic advantages of NPT have been clinically demonstrated for a broad variety of wound types, including but not limited to burns, lacerations, bed sores, etc. Improved patient-outcomes—including acceleration of wound-healing, decrease of infection and of necrosis, and enhancement of wound-closure quality—have been repeatedly noted in clinical studies.

Attainment of the clinical benefits of NPT depends upon successful practitioner-preparation of the wound-bed, of the surrounding perilesional area, and of the wider site. The number and intricacy of conventional NPT-required manipulations may make it difficult for a lone practitioner to efficiently carry out the procedure (while practical and institutional constraints may limit the number of practitioners and aides available); may lead to the need to repeat part or all of the procedure so as to correct earlier errors and/or later shifting of components; may contribute to incomplete success of the procedure, depriving the patient of the full benefit of NPT.

In the treatment of a typical wound, the above steps may be repeatedly applied over several courses of NPT. (As used herein, the term "course of NPT" refers to all NPT sessions performed on a given wound with a given NPT dressing in place; the term "NPT session" refers to any specific length of time over which the NPT vacuum controller applies continuous and/or intermittent negative pressure.) Each course of NPT may include, at the outset, cleansing and assessment of the progressively smaller wound-bed, followed by application of the dressing. Inherent painfulness may attend repeated manipulations of the wound-bed and surrounding wound-site, compounding the difficulties and complications involved in preparation of a wound for NPT by conventional apparatus and methods.

It would be desirable, therefore, to provide apparatus and methods for streamlining and simplifying preparation of a wound-site for NPT.

SUMMARY

Apparatus and methods for streamlining and simplifying preparation of a wound-site for NPT are provided. Such apparatus may include a wound dressing. (The term "wound" as used herein includes surgical and traumatic wounds, as well as other medical conditions for which NPT may be beneficial, such as any burns, pressure sores, diabetic ulcers, open abdominal wounds, and other conditions.)

The following description identifies in more detail some aspects of exemplary structure according to the invention. Certain embodiments of apparatus according to the present invention may incorporate in a single dressing some or all of the following components:

1. A preferably airtight, flexible, contour-conforming draping layer. A wound-facing broad surface of such draping may be capable of suitably adhering even to moist tissue surfaces; the same or another surface of such draping that may serve as a platform for other components. A drape may be selectively transversely perforated for transfer of air and/or fluid between the two surfaces; there may be one or more areas of such perforations across the draping layer.

2. One or more wound-fluid NPT drain(s). An NPT drain may be closely associated with and/or partly surrounded by one or more sets of layers of fluid-absorbing/transferring material(s) such as those suitable for wound-packing. Such sets of drain-associated surrounding material(s) may facilitate air/fluid transfer. Such transfer between an NPT drain and a prepared wound may be through draping layer perforations and via the drain-associated surrounding material(s); the area of a set of drain-associated surrounding material(s) may be nominally centered on an area of the draping layer perforations, facilitating such transfer. An NPT drain of the dressing according to the present invention may have functions and capabilities beyond the air/fluid transfer delineated in this paragraph.

3. One or more single-lumen or multi-lumen vacuum/drainage tube(s). One end of a vacuum/drainage tube may be associated with one or more wound-fluid NPT drains; the other end of a vacuum/drainage tube may be equipped with one or more airtight tube-connecting adapters for connection to an NPT vacuum controller and/or other treatment control-and-monitor equipment.

4. One or more preferably airtight vapor sealant sheet(s). Such sheet (s) may closely overlie and extend beyond each material-surrounded wound-fluid NPT drain. Such vapor sealant sheets may feature tube-exit apertures for the vacuum/drainage tube(s) associated with each NPT drain. The perimeter of each vapor sealant sheet associated with an NPT drain may be sealed to the draping layer in an airtight manner and/or to other such perimeter-sealed vapor sealant sheets. Such vapor sealant sheets may be exclusively contacting only other components of the dressing, requiring no contact of the vapor sealant sheets with patient tissue.

5. One or more tube-anchorage and tube-exit-sealant layer(s) associated with the vapor sealant sheet(s) associated with the NPT drain(s). Such layer(s) may mechanically stabilize the placement and orientation within the dressing of the vacuum/drainage tube(s) and of the wound-fluid NPT drain(s). Such layer(s) may seal the tube-exit of the vacuum/drainage tube(s) at and/or along tube-egress from the interior to the exterior of the dressing.

The dressing, basic components and features of which may be summarized above, may be available in several shapes and sizes to accommodate a range of wound types and dimensions. A dressing may contain multiple NPT drains and/or multiple associated vacuum/drainage tubes. Vacuum/drainage tubes of a dressing may be of single-lumen and/or multi-lumen configurations.

The draping layer of the dressing may be configured with areas of wound-facing tissue-adhesive surface alternating (or otherwise mixed) on a given side of the draping layer with areas of non-wound-facing surface: Areas of non-wound-facing surface of the drape may feature full functional sets of the other components as summarized above, coupled with coterminous areas of reverse-side wound-facing tissue adhering surface; each pair of coterminous oppositely sided surfaces may communicate through draping layer perforations as described above.

The draping layer of the dressing may be packaged with a readily removable backing layer protecting and preserving the wound-facing tissue-adhesive surface(s) of the draping layer. A dressing may be provided in appropriately labeled sterile over-wrapping. The wrapped dressing may be supplied in a kit with suitable materials and apparatus for wound-cleansing and debridement and for initial wound-packing.

The dressing that may be described in summary above may streamline and simplify methods for preparation of a wound for NPT. In preparation for application of a dressing to a wound for which NPT is indicated, the wound-site may undergo standard assessment, and irrigation/cleansing of the bed and of the surrounding perilesional area, together with any needed slough-removal/debridement of the wound.

In preparation for application of a dressing, the wound-bed may be slightly under-packed. It should be noted that the wound-bed should not be overpacked. The precaution of slight wound-bed under-packing may accommodate the contraction of the packed wound-bed upon being subjected to negative pressure. The attendant reduction of wound-bed volume may force some of the packing material of a fully packed wound-bed undergoing NPT out onto and/or against the perilesional area, with possible deleterious effects.

The slightly under-packed, almost completely filled wound-bed would not be sealed or draped prior to application of the dressing.

A dressing (of appropriate size, shape and any other characteristics such as, but not limited to, tube lumen configuration and NPT drain number) may be applied directly to the slightly under-packed, almost completely filled wound-bed and to the surrounding wound-site. The following procedural outline is for a representative dressing containing a single drain-associated area of drain-surrounding fluid-absorbing/transferring material(s); adjustments, mainly of repetition, to the following procedural steps may be needed for application of a more complexly configured dressing.)

1. Removing the dressing from its sterile over-wrapping.

2. Removing the backing layer associated with the wound-facing tissue-adhesive surface of the draping layer of the dressing.

3. Orienting the dressing for suitable directionality of its exiting vacuum/drainage tube(s).

4. Approximately centering the drain-surrounding fluid-absorbing/transferring material(s) on the area of the slightly under-packed, almost completely packed wound-bed. Such positioning may yield overlap of the upper surface of the packing material within the wound-bed with the draping layer perforations. The area of drain-surrounding fluid-

absorbing/transferring material(s) may be nominally centered within the dressing on the area of the drain layer perforations.

5. Applying the dressing to the wound-site. The tissue-adhesive wound-facing surface of the draping layer should be placed directly over and/or upon the uppermost layer of wound-packing material within the slightly under-packed wound-bed. The dressing should preferably be approximately centered (as described in the previous step) on the wound-bed.

6. Adhering the contour-conforming draping layer of the dressing to the tissue of the surrounding wound-site.

7. Connecting a drain-distal terminus of the vacuum/drainage tube to tubing from a suitable NPT vacuum controller and/or to other treatment control-and-monitor equipment that may be set to enhance NPT wound-healing.

The above-outlined steps involved in preparation of wounds for NPT by means of the dressing may enhance wound-healing using NPT. Further, such a dressing according to the invention may mitigate difficulties, complications and pain associated with preparation of a wound for NPT.

Thus, the dressing provides apparatus that may streamline and simplify methods for readily preparing a wound-site for NPT.

BRIEF DESCRIPTION OF THE DRAWINGS

The objects and advantages of the invention will be apparent upon consideration of the following detailed description, taken in conjunction with the accompanying drawings, in which like reference characters refer to like parts throughout, and in which:

FIGS. **1-6** show a representative wound typical of wounds for which NPT may be clinically indicated.

FIG. **1** shows the representative wound at a stage of pre-treatment cleansing prior to wound-packing.

FIG. **2** shows the representative wound with a layer of non-adhering sterile material having been laid upon the base of the wound-bed.

FIG. **3** shows the wound at a typical early stage in conventional procedures for preparation of a wound for NPT, with drain and attached tube in place.

FIG. **4** shows the wound at a subsequent stage of conventional procedures for preparation of a wound for NPT, with wound-packing completed.

FIG. **5** shows the packed wound having been further prepared for NPT by conventional procedures, with the wound and the surrounding wound-site having been covered with an airtight draping material.

FIG. **6** shows the conventionally prepared wound and surrounding wound-site under NPT conditions. The portrayal of the tube-terminus beyond the draping material indicates the functioning of an NPT vacuum controller (not shown).

FIGS. **7**A-C show views from "above" of embodiments of a dressing according to the present invention.

FIG. **8** shows a view from "below" of an embodiment of a dressing according to the present invention.

FIG. **9** shows an exploded, multi-tiered view from "above" of layers of components of an embodiment of the dressing according to the present invention.

FIGS. **10-11** show exploded, cross-sectional schematic views of layers of components of embodiments of the dressing according to the present invention.

FIGS. **12-14** show embodiments of the dressing according to the present invention (as per FIGS. **7-11**) in conjunction with a representative wound (the latter, as per FIGS. **1-2**).

FIG. **12** shows the representative wound prepared beyond the stage of FIG. **2**, having been readied by wound-packing for application of the dressing according to the present invention.

FIG. **13** shows a dressing according to the present invention having been representatively applied to the representative wound and to the surrounding wound-site.

FIG. **14** shows the representative wound (and the surrounding wound-site) and a dressing according to the present invention applied thereto, under NPT conditions.

DETAILED DESCRIPTION OF THE DISCLOSURE

In systems and methods according to the present invention, a dressing may be utilized in preparing a wound for NPT.

The dressing may provide apparatus that may be utilized for preparation of wounds for NPT via a number of steps. By providing apparatus that may reduce the number and complexity of steps involved in wound-preparation for NPT, use of the dressing may streamline and simplify wound preparation for NPT.

Details of systems and methods according to the present invention may be clarified as set forth in the following figures. FIGS. **1-6** portray representative wounds either alone or in association with representative NPT dressings in various stages of conventional preparation or use. FIGS. **7-14** portray representative dressings according to the present invention, either alone or in association with wounds.

FIG. **1** is a perspective view of a representative wound. The wounds represented may be surgical or traumatic wounds, acute or chronic wounds, or other wounds, including but not limited to wounds produced by surgical excision, specific degloving injuries, particular burns, diabetic extremity ulcers, and pressure sores. Such wounds may be on and/or in non-human surfaces. All such wounds are considered for application of the dressing according to the present invention.

The representative wound of FIG. **1** is portrayed as a wound-bed **102** surrounded proximally by an area **100** of perilesional tissue. Considering FIG. **1** as a flat horizontal field, the portrayal is seen by a viewer stationed beyond the field's "FIG." number-bearing edge, that edge of the figure being the edge closest to the viewer. The viewer is taken as facing in the direction of area **100**, lined up approximately with the "FIG." number, and peering down at wound-bed **102** from directly above. In the rendering of FIG. **1**, overhead illumination is taken as being incident upon area **100** and wound-bed **102** from the viewer's right. In this application, wound-figure illustrations and perspective-view illustrations of the present invention may utilize this perspective view.

The terms "right" and "left" as used herein for orientation and to distinguish aspects of designated illustrated features, refer to the right and left, respectively, of the above described viewer. Likewise, the terms "near" and "far" as used herein to distinguish aspects of designated illustrated features, refer to those aspects' relative closeness to the viewer's station beyond the "FIG." number-bearing near edge of each figure. The terms "below" (or "beneath") and "above" as used herein to distinguish aspects of designated illustrated features associated with the wound-bed and/or the wound-dressing, refer to those aspects' being, respectively, vertically proximal to and vertically distant from the wound-base, as per the perspective view utilized and along the line-of-sight of the viewer, along which a displacement from

"below" to "above" would be toward the viewer. Likewise, the terms "lower" (or "down" or "downward") and "upper" (or "up" or "upward") as used herein to distinguish aspects of designated illustrated features associated with the wound-bed and/or the wound-dressing, refer to those aspects' being, respectively, vertically proximal to and vertically distant from the wound-base, as defined for "below" and "above."

In FIG. **1**, wound-bed **102** features a base **106** surrounded and defined by a set of walls **104**. The portrayal of wound-base **106** and wound-walls **104** features texturing typical of exposed subcutaneous tissue. Such choice of tissue and its associated texturing are representative and not limiting; any wound surfaces for which NPT may be clinically indicated are considered.

In FIG. **1**, wound-base **106** is lower than the perilesional skin of proximal area **100** by the depth of wound-walls **104**.

FIG. **1** shows wound-bed **102** at a representative stage of pre-treatment cleansing prior to wound-packing. The representative cleansing of wound-bed **102** in FIG. **1** portrays an area of wound-base **106** having a medicinal salve (or cleansing agent) **114** being applied to it by means of a stick-and-swab **112**. Pre-treatment methods may be utilized in various combinations to achieve the desired preparation of wound-bed **102**. Pre-treatment cleansing may typically involve all surfaces of wound-bed **102**. Area **100** may also be suitably cleansed in preparation for wound treatment.

FIG. **2** is a perspective view showing the representative wound subsequent to the pre-treatment procedures representatively portrayed in FIG. **1**. In FIG. **2**, perilesional area **200** and wound-bed **202** may have been prepared for wound-packing by appropriate pre-treatment procedures. Typically, the wound-bed is clinically assessed before being packed. Preparatory to the scene portrayed in FIG. **2**, an initial layer of dressing material may have been shaped (typically, cut) to closely match the contours of wound-base **106** of FIG. **1**. Usually, the shaped material may have been prepared slightly undersized relative to wound-base **106**, allowing for ease of placement within the wound-bed and for anticipated subsequent reduction of wound-base area through healing. The dressing material may typically have been treated, possibly during manufacture, to be non-adhering to wound surfaces and to have other clinically appropriate characteristics.

FIG. **2** shows gauze **222** having been laid down across much of the wound-base. Gauze **222** is representative of a wound-shaped, slightly under-sized, non-adhering initial dressing material laid into wound-bed **202** prior to wound-packing. Gauze **222** is representative of any such suitable material, including but not limited to knitted fabrics such as Smith and Nephew's ADAPTIC™ dressing and non-woven polymer surfaces such as Boehringer's BIO-DOME™ dressing.

In FIG. **2**, gauze **222** is portrayed as having been inserted within wound-bed **202**, laying upon and across the wound-base with some clearance from wound-walls **204** roundabout the wound-base. Exemplary non-covered wound-base **206** is shown proximal to the left wound-wall **204**.

FIG. **3** is a perspective view of a typical early stage in conventional procedures for preparation of a wound for NPT. On top of non-adhering initial dressing **322**, a wound-packing material **324** is shown in wound-bed **302**. To the left of wound-bed **302**, exiting packing material **324** is shown as continuous with a supplementary section of packing material **326**, perspectively portrayed as suspended above the left side of area **300**.

In FIG. **3**, packing materials **324** and **326** are portrayed as gauze. Alternate conventional procedures of wound-packing preparation for NPT may utilize other varieties of packing material such as various shapeable sponge-like foams, such as V.A.C.® GRANUFOAM™.

FIG. **3** portrays an early stage in conventional procedures for preparation of a wound. A representative conventional NPT drain **330** is shown having been emplaced upon the early layering of packing material **324** within wound-bed **302**. NPT drain **330** typically features a hollow interior surrounded by walls transversely perforated by one or more holes represented by a set of NPT drain holes **332**. Holes **332** provide access from outside NPT drain **330** to the hollow core of NPT drain **330**. NPT drain **330** may be any suitable shape—e.g., cylindrical, flat, flattened cylindrical, etc.

In FIG. **3**, the near terminus of a vacuum/drainage tube **335** is shown associated with and exiting from NPT drain **330**, the hollow core of tube **335** understood to be continuous with the hollow core of drain **330**. Tube **335** is shown extending from area **300** to a region of a wider wound-site **305** where the far tube-terminus is portrayed as located.

In FIG. **3**, NPT drain **330** is representatively portrayed oriented with vacuum/drainage tube **335** exiting up out of wound-bed **302** at far wound-wall **304** to lie along far perilesional area **300**.

The location and orientation of drain **330** within wound-bed **302** may impact the effectiveness of NPT. Any of holes **332** being highly proximal to a section of wound-walls **304** may, under the negative pressure conditions of NPT within wound-bed **302**, damage tissue of wound-walls **304**. Drain **330** drawing exudate preferentially from one side of the wound-bed may thwart promotion of symmetric wound-healing. These and similar considerations underscore the need for fixity of NPT drain location and orientation after emplacement by practitioner-manipulation. Ideally, drain **330** would be fixed in location and orientation by some apparatus directly within the defined borders of wound-bed **302**. In conventional wound-preparation procedures for NPT, such apparatus-placement within wound-bed **302** may, however, interfere with subsequent wound-packing, exudate-drainage and/or wound-healing.

As shown in FIG. **3**, anchoring drainage/vacuum tube **335** to the patient's skin may be the approach used to maintain the location and orientation of NPT drain **330** relative to wound-bed **302**. While high proximity of tube-anchorage to wound-bed **302** may improve drain-fixity, perilesional skin of area **300** proximal to wound-bed **302** may be too frail or sensitive to serve as a tube-anchorage site. In addition, the usual apparatus for tube-anchorage, a set of skin-adhesive (and, possibly, tube-adhesive) strips **344**, typically tape, but which may also be formed from another suitable sealant such as pliable putty, may interfere with perilesional participation in wound-healing. As presented, adhesive strips **344** anchor vacuum/drainage tube **335** onto the patient's skin at a far region of perilesional area **300** that is part of a region of wider wound-site **305**. A layer of skin-protective material **342**, such as pliable putty, laid down upon the patient's skin prior to laying tube **335** across it, is shown running under the section of tube **335** below the set of adhesive strips **344**. Layer **342** and adhesive strips **344** shown are representative of a range of suitable materials including skin-adhesive ostomy strips and surgical tape.

Even with anchorage of tube **335** in proximity to wound-bed **302**, the location and orientation of NPT drain **330** relative to wound-bed **302** may be subject to shifting. Such shifting may result from practitioner-manipulations involved in subsequent steps of conventional procedures for wound-preparation for NPT. Even in circumstances that allow for correction of such shifting within conventional

procedures for wound-preparation for NPT, sub-optimality of care may result. Such corrections may involve adjustment or replacement of components of dressing, drain and/or anchorage, which may contribute to patient discomfort.

FIG. **4** is a perspective view of a typical stage in conventional procedures for preparation of a wound for NPT, subsequent to wound-bed packing and preparatory to wound-site draping. In FIG. **4**'s portrayal of almost fully packed wound-bed **402**, material **428***b* is representative of an uppermost layer of packing material; material **428***a* is representative of lower layers of packing material.

In FIG. **4**'s portrayal of almost completely packed representative wound-bed **402** prior to draping, NPT drain **430** within wound-bed **402** is directly indicated as covered by packing material **428***b*; below layer **428***b*, NPT drain **430** may be covered by layers **428***a*. Proximal to the far end of covered NPT drain **430**, a section of vacuum/drainage tube **435***a* associated with the drain is indicated as covered by material **428***a-b*. A near section of vacuum/drainage tube **435***b*, continuous with the gauze-covered tube section **435***a*, is portrayed exiting from packing material **428***a-b* in the vicinity of far wound-wall **404**. The near section of vacuum/drainage tube **435***b* is portrayed as completing its climb up and out of wound-bed **402** in the vicinity of far wound-wall **404**, to lie upon the surrounding perilesional area (as depicted in FIG. **3** for vacuum/drainage tube **335** exiting wound-bed **302** to lie upon area **300**). Wound-site skin-anchorage of tube-section **435***b* via skin-adhesive strips **444**, typically tape, but which may also be formed from another suitable sealant such as pliable putty, and skin-protective material **442** is as described in FIG. **3** for strips **344** and material **342**, respectively.

FIG. **5** is a perspective view of a typical stage in conventional procedures for preparation of a wound for NPT. The stage portrayed may be subsequent to wound-bed draping and preparatory to reduction of wound-bed ambient air pressure by use of an NPT vacuum controller. The wider wound-site **505**, inclusive of wound-bed **502** and its associated perilesional area, is shown as having been draped with a representative contour-conforming material **555***a-b*. The lower surface of draping material **555***a-b*, designated **555***b*, may typically be skin-adhesive. Draping material **555***a-b* may typically be flexible, facilitating close conforming of **555***a-b* to the underlying contours of site **505**.

Draping material **555***a-b* portrayed in FIG. **5** is typically impermeable to liquids and gases. By conventional practice, practitioner-smoothing of skin-adhesive material **555***a-b* to conform to site **505** contouring, may effect an airtight perimeter seal between surface **555***b* and the patient's skin across draped surfaces of site **505** roundabout wound-bed **502**.

Draping material **555***a-b* may be transparent, as portrayed in FIG. **5**. Visible beneath draping material **555***a-b*, wound-bed **502** is portrayed with drain **530** and its associated section of vacuum/drainage tube **535***a* indicated as present beneath layers of packing material **528**. The section of vacuum/drainage tube **535***b* running from the wound-bed across the patient's skin of wider wound-site **505** is portrayed beneath draping material **555***a-b*. Wound-site skin-anchorage of tube-section **535***b* via skin-adhesive strips **544** and skin-protective material **542** is as described in FIG. **3** for strips **344** and material **342**, respectively. The egress of the section of vacuum/drainage tube **535***c* from the perimeter of the drape is shown as having been sealed by an adhesive material **546**, typically tape.

FIG. **6** is a perspective view of a conventionally prepared representative wound-site **605** under NPT conditions. Beneath contour-conforming draping material **655**, wound-site skin-anchorage of tube **635** via skin-adhesive strips **644** and skin-protective material **642** is portrayed as described in FIG. **3** for strips **344** and material **342**, respectively; airtight sealing via adhesive material **646** of the tube-egress from drape **655** is portrayed as described for adhesive material **546** of FIG. **5**. In FIG. **6**, the terminus of tube **635** shown beyond drape **655**, is designated **637**, and displays an outward-directed arrow.

FIG. **6** portrays conventionally prepared wound-site **605** under NPT conditions of partial vacuum within wound-bed **602**. Those conditions are produced by the NPT vacuum controller acting through tube-terminus **637** upon suitably prepared wound-bed **602** and wound-site **605**. In FIG. **6**, wound-bed **602** is portrayed as contracted, smaller than the same-scale portrayal of wound-bed **502** of FIG. **5**. Perilesional area **600** proximal to wound bed **602** is portray distorted, its edge is drawn inward toward the contracted wound-bed.

In FIG. **6**, draping material **655** above packed wound-bed **602** is shown pulled downward into the wound-bed, pressed against packing material **628**; packing material **628** is shown distorted (relative to the portrayal of packing material **528** of FIG. **5**), compressed within the vacuum-reduced volume of wound-bed **602**.

Under NPT conditions portrayed in FIG. **6**, exudate would be drawn from the wound-base and wound-walls through packing material **628** to NPT drain **630** and out through vacuum/drainage tube **635** toward the NPT vacuum controller.

Pressure-settings and time-duration of NPT treatment (including use of ON/OFF cycling to produce intermittent NPT within a course of treatment) may vary as functions of several parameters. Such parameters may include wound-type, accepted institutional procedures, wound-packing material, vacuum controller, and practitioner training and predilections.

The apparatus of the present invention preferably reduces time and increases efficiency of implementation of NPT. Specifically, certain embodiments of the invention provide a first dressing layer and a second dressing layer. These two layers may preferably trap one or more layers of fluid-absorbing/transferring material in between the two dressing layers.

In one of the layers, perforations may exist that roughly correspond to the location of the fluid-absorbing/transferring material within the layers. A drain for removing fluid may be located in between the fluid-absorbing/transferring material layers, or proximal a single fluid-absorbing/transferring material layer.

In the other dressing layer, an aperture may exist that allows a drainage tube to pass through the other dressing layer. The tube connects to the wound-fluid drain. The structure of such a dressing may preferably promote efficient implementation of NPT on a wound at least because it allows the dressing to be more easily, and more quickly, applied to a patient.

Alternative embodiments of the dressing may include a single perforation in one of the dressing layers and the perimeter of the fluid-absorbing/transferring material affixed to the edges of the perforation. The structure of such an embodiment may also promote efficient NPT on a wound. Specifically, such a structure may promote efficient NPT at least because the structure can be applied in fewer steps than a conventional dressing which, typically, requires application in a component-by-component fashion.

Alternatively, one or more layers of the fluid-absorbing/transferring material may only be fixed to the dressing layer that does not include the perforation. In yet other embodiments, the fluid-absorbing/transferring material may be adhered both to the edges of the perforation and to the dressing layer that does not include the perforation.

FIGS. **7-13** are views of embodiments of a dressing according to the present invention. The dressing according to the present invention, components and functionality of which may be portrayed in FIGS. **7-13**, may be available in several shapes and sizes to accommodate a range of wound types and dimensions; the embodiments in FIGS. **7-13** are representative.

The dressing may be provided in an appropriately labeled sterile over-wrapping. Such over-wrapping may be provided for shipping, storage, protection and/or maintenance of sterile conditions. Such over-wrapping may indicate various characteristics of the components of the over-wrapped dressing as may be useful in selecting a particular dressing for matching to a given wound-type on or in a given wound-site. Additionally, the wrapped or unwrapped dressing may be supplied in (association with) a kit with suitable materials and apparatus for wound-cleansing and debridement and for initial wound-packing. The outer packaging of such kit may provide identification of contents of the kit, including those characteristics of the dressing that may be useful in selecting for matching of dressing to wound. The embodiments of the dressing according to the present invention in FIGS. **7-13** are shown independent of any such kit and without any over-wrap.

FIGS. **7**A-C are perspective views from above of embodiments of a dressing **780** according to the present invention. Perspective views of the dressing in this application maintain the linked set of view, orientation and directionality utilized for portrayal of wounds in FIGS. **1-6**.

In FIGS. **7**A-C, dressing **780** may also incorporate components not typically assembled in conventional NPT wound-preparation procedures. Components of dressing **780** may be suitably rated and/or approved for their use in patient care and/or for their use under NPT conditions of low air pressure.

FIGS. **7**A-C representatively present the components of dressing **780** according to the present invention. As portrayed in FIGS. **7**A-C, these components may include (with select components specifically presented in only two of the three FIGS. **7**A, **7**B and **7**C, to be specified below as such):

1. A wound-fluid NPT drain **730**. Wound-fluid NPT drain **730** of dressing **780** according to the present invention may be a hollow tube-like structure featuring transversely perforated walls, the perforations represented by a set of holes **732**. Holes **732** represent one or more transverse perforations that may provide access, possibly through a wall of drain **730**, to the hollow core of drain **730**. Such perforations **732** may be of a range of suitable sizes and shapes, and may be variously and selectively located along the wall(s) of drain **730**. Drain perforations **732** may be or may include the open terminus of a tube-like drain. In certain embodiments, drain **730** may be shaped as a flattened tube or in any other suitable configuration that allows for draining exudates.

Drain **730** of dressing **780** according to the present invention may be flexible and may be of a variety of materials, shapes, sizes and configurations. Drain **730** may be as structurally straightforward as a section of tube featuring a single hole **732**; drain **730** may be as structurally complex as a multi-part, multi-functional manifold featuring multiple, uniquely shaped and spaced holes **732**, and featuring flow-control modalities (e.g., anti-clogging), sensing capabilities (e.g., pressure-monitoring), signaling functions (e.g., indication of dressing-change time), and/or anti-bacterial or anti-microbial properties.

A dressing **780** according to the present invention may feature more than one wound-fluid NPT drain; each may be described as presented above in the description of wound-fluid NPT drain **730**. The location and orientation of each NPT drain **730** within a dressing **780** may be indicated on the dressing (and on and/or through any packaging over-wrapping of the dressing).

2. A vacuum/drainage tube **735**. Vacuum/drainage tube **735** of dressing **780** according to the present invention may provide a conduit through which low air pressure may be applied (via drain **730**) to a wound-bed and through which wound-fluid exudate may be drawn (via drain **730**) from a wound-bed. One terminus of vacuum/drainage tube **735** may be associated with NPT drain **730**. The association of tube **735** with drain **730** may be by structural attachment to drain **730**. The hollow core of tube **735** may be continuous with the hollow core of drain **730**. The hollow core of drain **730** may or may not be capped on the end of drain **730** opposite its juncture of continuity with tube **735**.

Vacuum/drainage tube **735** of dressing **780** according to the present invention may be available in a variety of materials (such as silicon tubing, plastic tubing or other suitable tubing material), strengths, flexibilities, lengths and carrying capacities. Vacuum/drainage tube **735** of dressing **780** may feature a single lumen of a range of cross-sections or a multiple set of lumens of various ranges of cross-section. Multi-lumen vacuum/drainage tube **735** may be of various configurations including, but not limited to, coaxial lumens and side-by-side lumens. Multi-lumen vacuum/drainage tube **735** may be configured at tube-termini with unique connectors and connections for specific sets of lumens or for each lumen, facilitating multiple uses of tube **735**.

Non-standard uses of vacuum/drainage tube **735** may be facilitated by the availability of multiple lumens. Such uses may or may not be carried out simultaneously with the standard use of at least one lumen of tube **735** for application of negative pressure to a wound-bed and for exudate-drainage from the wound-bed. Such multi-lumen uses include, but are not limited to, measurement via a lumen of ambient pressure within a wound-bed; flushing via a lumen of clogged drain holes **732**; delivery via a lumen of medicinal fluids to a wound-bed as part of a course of treatment; delivery via a lumen of apparatus or agents capable of providing information relative to ambient conditions, such as temperature, within the wound-bed; access via a lumen to a wound-bed by catheter-borne equipment of diagnostic, therapeutic and/or interventional utility; and delivery via a lumen of flushes of surfactant, cleansing and/or irrigating fluids to a wound-site preparatory to wound-dressing changes.

In dressing **780** according to the present invention, the terminus of tube **735** distal to drain **730** may feature a tube-connector adapter **737** that may be available in a variety of sizes and configurations. Adapter **737** may facilitate airtight connection to tubing leading to an NPT vacuum controller as well as connection to other treatment control-and-monitor equipment. Tube-terminus adapter **737** is representative of single and multiple tube-terminus adapters. For a multi-lumen tube **735**, a set of one or more adapters **737** may terminate the drain-distal end of tube **735**, each adapter of the set containing the connection(s) needed for one or more lumens connected to it and each adapter of the set possibly uniquely oriented as per its associated lumen(s).

A dressing **780** according to the present invention may feature more than one vacuum/drainage tube; each may be described as presented above in the description of vacuum/drainage tube **735**. Each such vacuum/drainage tube may be associated with one or more NPT drains; each of the latter may be described as presented above in the description of wound-fluid NPT drain **780**.

3. A set of layering of fluid-absorbing/transferring materials **725** and **729**, which may surround drain **730**, enfolding the drain between a lower layer **725** and an upper layer **729**. As portrayed, fluid-absorbing/transferring layers **725** and **729** may be nominally centered within the larger overall area of dressing **780** according to the present invention; drain **730** may be nominally centered on the area of layers **725** and **729**, from which vacuum/drainage tube **735** may exit. Such portrayed centering is representative and not limiting; the location of drain **730** relative to layers **725** and **729** and of layers **725** and **729** relative to the larger overall area of dressing **780** may be varied to accommodate different shapes and configurations of the dressing.

Fluid-absorbing/transferring layers **725** and **729** of dressing **780** according to the present invention may feature a variety of shapes, areas and thicknesses. Different shapes and configurations of the dressing featuring variously configured fluid-absorbing/transferring layers **725** and **729** associated with variously configured NPT drains **730**, may be optimized for wounds of different types, sizes and/or shapes. Layers **725** and **729** of dressing **780** may be flexible and may be comprised of gauze or other suitable materials. Layer **725** and layer **729** may differ from each other as to compositional materials and as to characteristic shapes, areas and thicknesses. Layers **725** and **729** may be of materials different from that of the packing within the wound-bed. For materials such as foam, layers **725** and **729** may represent the lower and upper segments, respectively, of such materials in which drain **730** is located. Layers **725** and **729** may or may not bear antimicrobial, bacteriostatic, surfactant, cleansing or ameliorative medicinal agents.

Fluid-absorbing/transferring layers **725** and **729** of dressing **780** are representative of one or more sets of such materials, each set containing one or more drains **730** each featuring one or more exiting tubes **735**; the dressing according to the present invention may incorporate multiple drains **730** associated with layers **725** and **729**. Layers **725** and **729** may or may not be structurally integral to drain **730**. The dressing according to the present invention may feature a drain **730** comprised of and built into suitable material layers **725** and **729**; the dressing according to the present invention may feature layers **725** and **729** configured from and linked to the material of drain **730**.

A dressing **780** according to the present invention may feature multiple sets of fluid-absorbing/transferring layers **725** and **729**. Such sets may differ from each other with respect to characteristic shape, area, thickness, orientation and/or compositional material(s), as well as with respect to the number and characteristics of the NPT drains surrounded and/or enfolded thereby and/or comprised thereof.

4. A contour-conforming draping layer **756**. Contour-conforming draping layer **756** of dressing **780** according to the present invention may serve as draping material for a wound-bed. Contour-conforming draping layer **756** may be transparent or translucent, with such transparency/translucency useful in positioning dressing **780** relative to a wound-bed to which it may be applied and, after application of dressing **780**, in visually monitoring the condition of said wound-bed during a course of NPT. Contour-conforming draping layer **756** may be comprised of one or more materials that confer flexibility and airtightness on draping layer **756**; draping layer **756** may be comprised of one or more materials that confer on a surface of the drape the capability of adhering even to moist, contoured surfaces of a patient's body, generally to perilesional skin and other wider wound-site skin. Such transparent/translucent, airtight, flexible, contour-conforming, tissue-adhering materials may include, but are not limited to, such hydrocolloids as ER Squibb's Duoderm® and 3M's Tegaderm™ or any other suitable hydrocolloid material or other suitable material. The composition and geometry of draping layer **756** may allow for repeated applications to and smoothing manipulations upon patient body surfaces, resulting in NPT-suitable tissue-adhesion and airtightness, even on moist contoured surfaces. Such airtight, flexible, contour-conforming, tissue-adhering draping layer **756** may be of suitable composition and geometry to maintain such characteristics under NPT conditions.

Contour-conforming draping layer **756** of dressing **780** according to the present invention may be directly associated with other components of dressing **780**. As portrayed (more explicitly in FIGS. **9-11**, presentations in which emphasize components' relative spatial locations), fluid-absorbing/transferring layers **725** and **729**, and drain **730** that may be surrounded thereby, may be associated with a surface of contour-conforming draping layer **756**. Fluid-absorbing/transferring layer **725**, as the lower of layers **725** and **729**, may be in physical contact with and lie along the surface of draping layer **756** with which layers **725** and **729** are directly associated.

Contour-conforming draping layer **756** of dressing **780** according to the present invention may feature a set of transverse perforations, the perforations represented by a set of holes **752**. Holes **752** represent one or more transverse perforations that may provide access through draping layer **756** from below layer **756** to drain **730** located within fluid-absorbing/transferring layers **725** and **729**. Draping layer perforations **752** may be of a range of individual sizes and shapes, and of suitable overall number and geometric arrangement, to provide such access to various configurations of layers **725** and **729** and of drain **730**. Draping layer perforations **752** may be variously located along the area of draping layer **756**, providing access to layers **725** and **729**. The access provided by draping layer perforations **752** may allow transfer of air and fluid between a packed wound-bed (situated below draping layer **756**) and drain **730** (situated above draping layer **756**).

Draping layer perforation **752** may be a single opening of geometry and area approximating the geometry and area of overlying fluid-absorbing/transferring layer **725**. This may facilitate direct contact of all or most of layer **725** with a packed wound-bed independent of intervening section of draping layer **756**.

In such embodiments where perforation **752** is a single opening of geometry and area approximating the geometry and area of overlying fluid-absorbing/transferring layer(s) **725**, or some other suitable geometry, then the perimeter of fluid-absorbing/transferring layer(s) **725** and/or **729** may be trapped between the draping layer **756** and/or vapor sealant sheet **757**. Alternatively, the perimeter of fluid-absorbing/transferring layer(s) **725** and/or **729** may be affixed to draping layer **756** by adhesive on the draping layer or in some suitable fashion. Alternatively, any suitable portion of fluid-absorbing/transferring layer(s) **725** and/or **729** may be affixed to vapor sealant sheet **757** by adhesive on vapor sealant sheet **757** or in some other suitable fashion.

Contour-conforming draping layer **756** of dressing **780** according to the present invention may allow for flexible, airtight adhesion to it of other components of dressing **780**. One such component may be a vapor sealant sheet **757**.

5. Vapor sealant sheet **757** may overlie all of the area of fluid-absorbing/transferring layer **729**. Vapor sealant sheet(s) **757** may be transparent or translucent, providing a view of overlain layer **729**, with such transparency/translucency useful in positioning dressing **780** relative to a wound-bed to which it may be applied. Vapor sealant sheet **757** may extend beyond the area of layer **729** to provide a perimeter roundabout the area of layer **729**. The perimeter of vapor sealant sheet **757** roundabout layer **729** may flexibly adhere to a surface of draping layer **756** in an airtight fashion. Vapor sealant sheet **757** may be of thickness and of preferably airtight material to serve as an airtight sealing above and roundabout layer **729**. Flexible, transparent/translucent, airtight vapor sealant sheet **757** may be of materials including a suitable hydrocolloid material or other suitable material that is non-hydrocolloid.

Airtight vapor sealant sheet **757** may form an airtight seal roundabout layer **729** by adhering directly to the material(s) of the surface of draping layer **756** and/or to other such perimeter-sealed vapor sealant sheets. Additionally or alternatively, airtight vapor sealant sheet **757** may form an airtight seal roundabout layer **729** by adhering to the material(s) of a surface of draping layer **756** (or to other vapor sealant sheets) by means of one or more sealing agents.

Perimeter-sealed vapor sealant sheet **757** may mechanically maintain the placement and orientation of fluid-absorbing/transferring layers **725** and **729** within the larger area of drape **756**. Within the area of drape **756**, perimeter-sealed vapor sealant sheet **757** may mechanically maintain the placement and orientation of several sets of layers **725** and **729**. Dressing **780** according to the present invention may feature several perimeter-sealed vapor sealant sheets **757**, each overlying one or more sets of layers **725** and **729**.

A vapor sealant sheet **757** may provide an exit for vacuum/drainage tube **735**. Maintenance of the airtight seal provided by vapor sealant sheet **757** notwithstanding the presence of the aperture necessitated by vacuum/drainage tube **735** exiting through sheet **757**, is dealt with below in the description of tube-anchorage and tube-exit-sealant components **745** and **747**.

Contour-conforming draping layer **756** of dressing **780** according to the present invention may feature a variety of shapes, areas and thicknesses to accommodate different types of wounds and NPT conditions. Contour-conforming draping layer **756** may be provided with a set of readily removable backing layer **762**. Backing layer **762** may be associated with and protect and preserve tissue-adhesive surface(s) of draping layer **756** until ready for application to a wound-site; such backing layer may prevent unintentional adhesion and/or contamination of draping layer **756**. Protective backing layer **762** may be comprised of suitable material including, but not limited, to paper and plastic sheeting.

6. A tube-anchorage and tube-exit-sealant component **745** and/or **747**. Tube-anchorage and tube-exit-sealant components **745** and **747** are featured together in FIG. **7**C, in an embodiment of dressing **780** according to the present invention in which the functioning of each of components **745** and **747** may reinforce each other. Tube-anchorage and tube-exit-sealant component **745** is featured without component **747** in the embodiment of dressing **780** according to the present invention presented in FIG. **7**A; tube-anchorage and tube-exit-sealant component **747** is featured without component **745** in the embodiment of dressing **780** according to the present invention presented in FIG. **7**B.

In embodiments of the dressing shown in FIG. **7**A-C, either one or both of tube-anchorage and tube-exit-sealant components may mechanically maintain drain **730**'s placement and orientation within fluid-absorbing/transferring layers **725** and **729**. Either one or both tube-anchorage and tube-exit-sealant components may maintain drain **730**'s placement and orientation preferably by reinforcing the fixation of tube **735** proximal to the tube's (or tubes') exit(s) from sheet **757** overlying layer **729**. Such reinforcement may be achieved by the sealing of such tube-anchoring components to other components of the dressing, requiring substantially no contact of the dressing's tube-anchoring components with a patient's tissues.

As presented in FIG. **7**A, tube-anchorage and tube-exit-sealant component **745** may provide anchorage for vacuum/drainage tube **735** exiting vapor sealant sheet **757**. As portrayed, such tube-anchorage may be provided by component **745** proximally to the exit of tube **735** from sheet **757**, by component **745** sealing around and upon the vicinity of the tube-exit aperture in sheet **757**. Such tube-anchorage sealing may mechanically contribute to tube-fixity and may confer airtightness to the tube-exit. Such mechanical anchorage of tube **735** may also contribute to maintenance of the placement and orientation of NPT drain(s) **730** within dressing **780**. It should be noted that the operation of tube-anchorage and tube-exit-sealant components **745** and **747**, respectively, may be enhanced by the application of a preferably pliable putty. Such putty may be applied about the exit point of tube **735** from one or both of tube-anchorage and tube-exit-sealant components **745** and **747**.

In certain embodiments, there may be no affixing of fluid-absorbing/transferring layer(s) **725** to draping layer **756** and/or vapor sealant sheet **757** by tube-exit-sealant components **745** and **747**. In such embodiments, a seal between tube and vapor sealant sheet **757** may be obtained with a pliable putty, or some other suitable substance, applied at the exit point of tube **735** from vapor sealant sheet.

Tube-anchorage and tube-exit-sealant component **745** may overlie part or all of vapor sealant sheet **757** and may extend beyond sheet **757** in area. Component **745** may be transparent or translucent, providing a view of and through overlain vapor sealant sheet **757**. Additionally or alternatively, the area-footprint of component **745** overlying vapor sealant sheet **757** may be sufficiently smaller than the area of sheet **757** that a view of and through transparent/translucent sheet **757** adequate for purposes of positioning dressing **780** may be obtained without need to see below the area-footprint of component **745**.

Component **745** may be comprised of one or more materials that confer a suitable range of flexibilities, thicknesses, anchorage-strengths, (transparency/translucency) and airtightness-sealing to the component. Such materials include, but are not limited to, ER Squibb's Duoderm® and 3M's Tegaderm™ or any other suitable hydrocolloid material or any other suitable material which may not be a hydrocolloid material. Component **745** may be sealed onto vapor sealant sheet **757** by adhesion of the materials of component **745** and sheet **757**. Additionally or alternatively, component **745** may be sealed onto draping layer **756** by adhering directly to the material(s) of the surface of draping layer **756**. Additionally or alternatively, component **745** may be sealed onto vapor sealant sheet **757** and/or draping layer **756** by means of one or more sealing agents.

As presented in FIG. **7**B, tube-anchorage and tube-exit-sealant component **747** may provide anchorage for vacuum/

drainage tube **735** exiting vapor sealant sheet **757**. As portrayed, such tube-anchorage may be provided by component **747** both proximally to the exit of tube **735** from sheet **757** and along a suitable length of section of tube **735** running over vapor sealant sheet **757** and over draping layer **756**. Tube-anchorage and tube-exit-sealant component **747** may provide such anchorage by overlying (and possibly flexibly sealing to) all of the area of vapor sealant sheet **757** and by extending beyond the area of sheet **757** to provide a perimeter roundabout vapor sealant sheet **757**. The perimeter of component **747** roundabout the edges of vapor sealant sheet **757** may flexibly adhere to and seal a surface of draping layer **756** roundabout vapor sealant sheet **757**. Such perimeter-sealed overlying of vapor sealant **757** may reinforce the airtightness of vapor sealant sheet **757** across its area. Tube-anchorage and tube-exit-sealant component **747** may be transparent or translucent, providing a view of and through overlain vapor sealant sheet(s) **757**.

As presented in FIG. **7**C, tube-anchorage and tube-exit-sealant components **745** and **747** may both be incorporated into dressing **780**, and may both provide anchorage and tube-exit-airtightness for vacuum/drainage tube **735** exiting vapor sealant sheet **757**. As presented in FIG. **7**C, component **745** may be as described above in FIG. **7**A. As presented in FIG. **7**C, component **747** may be as described above in FIG. **7**B, with the additional functional feature that it may also overlie (and possibly seal with) component **745**.

As presented in FIGS. **7**B-C, tube-anchorage and tube-exit-sealant component **747** may conform to the section of underlying tube **735**, extending the area of tube-exit into a channel, the upper surfaces of which may be defined as part of the lower surface of component **747**. The lower surfaces of such tube-exit channel may be defined proximally to the tube-exit aperture in sheet **757** as part of the upper surface of vapor sealant sheet **757** and, beyond the perimeter of **757**, by part of the upper surface of drape **756**. Component **747** may flexibly adhere to the section of tube **735** running within the tube-exit channel and may seal that section of tube with the other surfaces defining the channel. Additionally or alternatively, such channel may be sealed by means of one or more sealing agent(s).

Component **747** may be comprised of one or more materials that confer a suitable range of flexibilities, thicknesses, transparency/translucency, anchorage-strengths, and airtightness-sealing to the component. Such materials include, but are not limited to, Tegaderm, DuoDerm or any other suitable hydrocolloid material or other suitable non-hydrocolloid material. Component **747** may be sealed onto vapor sealant sheet **757**, onto component **745**, onto draping layer **756** and/or onto vacuum/drainage tube **735** by adhesion of the materials of component **745** with the materials of those other components. Additionally or alternatively, component **747** may be sealed to any or all of vapor sealant sheet **757**, component **745**, draping layer **756** and tube **735** by one or more sealing agents.

A dressing **780** according to the present invention may feature a contour-conforming draping layer **756** of dressing **780** may feature, on a given side, both areas of wound-facing surface and areas of non-wound facing surface. Areas of wound-facing surface of such drape layer **756** may be associated with and protected and preserved by sections of backing layer **762**. Preferably coterminous with any or all of those areas on either side of such drape **756**, but on the reverse-side of such drape **756** from the wound-facing tissue-adhesive surfaced areas that may be associated with protective backing layer **762**, areas of non-wound-facing surface of such drape **756** may feature fully assembled, sealed and functional sets of the other non-draping-material components of dressing **780**. Each pair of coterminous surfaces on opposite sides of such drape layer **756** may communicate through one or more sets of draping layer perforations **752** as described above.

FIG. **8** is a perspective view from below of an embodiment of a dressing **880** according to the present invention. Protective backing layer **862** is portrayed partially peeled back from the tissue-adhesive face of draping layer **856** to show transverse draping layer perforations **852** running through layer **856**, such perforations being representatively nominally centered on the area of layer **856**.

On the reverse surface of draping **856**, aspects of components that may be in proximal contact with that surface are shown. On the reverse surface of draping **856**, representatively shaped area of fluid-absorbing/transferring layer **825** is indicated as extensively overlapped by the area of draping layer perforations **852**. Layer **825** is representatively presented as a gauze layer, part of the mesh of which may be directly visible through draping layer perforations **852**. Also indicated on the reverse surface of drape **856** are the draped-sealed perimeter of vapor sealant sheet **857** and the draped-sealed perimeter of tube-anchorage and tube-exit-sealant component **847**. (The embodiment viewed from below in FIG. **8** may correspond to the embodiments viewed from above in FIGS. **7**B-C.)

Indicated as running between sheet **857** and layer **847** along the reverse surface of drape **856** is a section of vacuum/drainage tube **835** proximal to layer **825**. Tube **835** is shown exiting the channel formed by part of the reverse surface of drape **856** and part of component **847**. A terminus of vacuum/drainage tube **835** and its associated tube-terminus adapter **837** are shown beyond the edge of draping sheet **856**.

FIG. **9** is an exploded perspective view from above of an embodiment of a dressing **980** according to the present invention (corresponding to the embodiment in FIG. **7**C). From above, the tiered components presented may be:

1. Tube-terminus adapter **937** that may be connected to a terminus of vacuum/drainage tube **935**.
2. Vacuum/drainage tube **935** that may run partly under tube-anchorage and tube-exit-sealant component **947** (and then may proceed downward to and/or through other, lower components).
3. Tube-anchorage and tube-exit-sealant component **947** that may be above, and may extend in area beyond the areas of, component **945** and component **957**.
4. Tube-anchorage and tube-exit-sealant component **945** (through which tube **935** may run) that may be above component **957**.
5. Vapor sealant sheet **957** (through which tube **935** may run) that may be associated at its tube-exit aperture with tube-anchorage and tube-exit-sealant component **945**; vapor sealant sheet **957** may be above, and may extend in area beyond the area of, component **929**.
6. Fluid-absorbing/transferring layer **929** (through or below which tube **935** may run) that may be above drain **930** and may be continuous with layer **925**.
7. NPT drain **930** that may be attached to or may be integrally continuous with vacuum/drainage tube **935**; drain **930**, which may feature drain perforations **932**, may be above layer **925**.
8. Fluid-absorbing/transferring layer **925** (through or above which tube **935** may run) that may be above, and may overlie perforations **952** of, draping layer **956**.

9. Draping layer **956** that may be below all the above-listed components of dressing **980**. Draping layer **956** may be above, and be as extensive in effective area as, component **962**.

10. Layer **962** that may be backing the tissue-adhesive surface of layer **956**. Protective backing layer **962** may be removed prior to application of dressing **980** to a wound, such that draping layer **956** may be the most wound-proximal component of a dressing **980** applied to a wound.

FIG. **10** and FIG. **11** are exploded, cross-sectional schematic views of embodiments of a dressing according to the present invention.

FIG. **10** schematically portrays in exploded cross-section the components of a dressing **1080** according to the present invention (corresponding to the embodiment in FIG. **9**). In FIG. **10**, draping layer **1056**, with associated perforations **1052**, is portrayed as serving as a platform for the other portrayed components. NPT drain **1030**, with associated perforations **1032**, is portrayed nested between fluid-absorbing/transferring layers **1025** and **1029**; NPT drain **1030** is portrayed associated with vacuum/drainage tube **1035**. Following along drain-associated tube **1035** away from its association with NPT drain **1030**, tube **1035** is portrayed as passing between fluid-absorbing/transferring layers **1025** and **1029**, through vapor sealant sheet **1057**, through tube-anchorage and tube-exit-sealant component **1045**, and through tube-anchorage and tube-exit-sealant component **1047**. Tube-anchorage and tube-exit-sealant component **1047** is portrayed as wrapping around tube **1035**, such wrapping representing the anchorage and airtightness that either or both tube-anchorage and tube-exit-sealant components **1045** and **1047** may provide.

In FIG. **10**, drain-containing fluid-absorbing/transferring layers **1025** and **1029** are portrayed as nested within vapor sealant sheet **1057**. Tube-anchorage and tube-exit-sealant component **1045** is portrayed as overlying sheet **1057** proximal to the exit of tube **1035** from sheet **1057**, in which vicinity component **1045** may both stabilize fixation of tube-position and contribute to airtight sealing of said tube-exit. Drain **1030**, layers **1025** and **1029**, sheet **1057**, and component **1045** are portrayed as nested within the tube-anchorage and tube-exit-sealant component **1047**.

FIG. **11** schematically portrays in exploded cross-section the components of a dressing **1180** according to the present invention (corresponding to the embodiment in FIG. **9**). FIG. **11** may present the components presented in FIG. **10** less vertically separated than in FIG. **10**. In FIG. **11**, draping layer **1156** is portrayed as serving as a platform for the other portrayed components, and as the contact-surface against which some components may be sealed. NPT drain **1130** is portrayed as closely surrounded by fluid-absorbing/transferring layers **1125** and **1129**; NPT drain **1130** is portrayed associated with vacuum/drainage tube **1135**. Following along drain-associated tube **1135** away from its association with NPT drain **1130**, tube **1135** is portrayed as passing between or through fluid-absorbing/transferring layers **1125** and/or **1129**, through vapor sealant sheet **1157**, through tube-anchorage and tube-exit-sealant component **1145**, and through tube-anchorage and tube-exit-sealant component **1147**.

In FIG. **11**, drain-containing fluid-absorbing/transferring layers **1125** and **1129** are portrayed as closely nested within vapor sealant sheet **1157**; layer **1129** is portrayed as closely overlain by vapor sealant sheet **1157**. The edges of vapor sealant sheet **1157** that extend beyond sheet **1157**'s overlying of layer **1129** are portrayed lying along draping layer **1156**; vapor sealant sheet **1157** may form airtight seals along the areas of its contact with the surface of draping layer **1156**. Tube-anchorage and tube-exit-sealant component **1145** is portrayed as closely overlying vapor sealant sheet **1157** proximal to the exit of tube **1135** from vapor sealant sheet **1157**, in which vicinity component tube-anchorage and tube-exit-sealant component **1145** may both stabilize fixation of tube-position (and, thereby, stabilize fixity of drain-position) and contribute to airtight sealing of said tube-exit.

In FIG. **11**, tube-anchorage and tube-exit-sealant component **1145** and vapor sealant sheet **1157** are portrayed as closely overlain by tube-anchorage and tube-exit-sealant component **1147**. The edges of tube-anchorage and tube-exit-sealant component **1147** that extend beyond components **1147**'s overlying of component **1145** and of fluid-absorbing/transferring layer **1129** are portrayed lying along draping layer **1156**; tube-anchorage and tube-exit-sealant component **1147** may form airtight seals along the areas of its contact with the surface of draping layer **1156**.

As per the portrayals in FIG. **11** and the descriptions presented in FIGS. **7-10** of components' features and functions, the tube-exit from the interior to the exterior of dressing **1180** may be sealed by tube-anchorage and tube-exit-sealant component **1145** and/or by tube-anchorage and tube-exit-sealant component **1147** (either or both, possibly, by means of sealing agent(s)); airtight component **1147** may closely overlie component **1145** and vapor sealant sheet **1157**; airtight component **1147** may be sealed at its edges against the surface of draping layer **1156** (possibly by means of sealing agent(s)); airtight vapor sealant sheet **1157** may overlie fluid-absorbing/transferring layers **1125** and **1129**, closely overlying layer **1129**; airtight vapor sealant sheet **1157** may be sealed at its edges against the surface of draping layer **1156** (possibly by means of sealing agent(s)); the airtight material(s) of draping layer **1156** may underlie drain-containing fluid-absorbing/transferring layers **1125** and **1129**, closely underlying layer **1125**. Thus, air/fluid-flow access to drain **1130** from the exterior of dressing **1180** may be obtained only via draping layer **1156**'s perforations **1152** and through vacuum/drainage tube **1135**.

The portrayed drain-distal terminus of vacuum/drainage tube **1135** displays an outward-directed arrow. The arrow may indicate the direction within tube **1135** of outward flow of air and/or fluid. Such air/fluid-flow may originate exterior to dressing **1180** along the wound-facing surface of draping layer **1156**; may traverse draping layer **1156** to the non-wound-facing surface of draping layer **1156** through its associated perforations **1152**; may travel via fluid-absorbing/transferring layers **1125** and **1129** to the interior of drain **1130** through its associated perforations **1132**; and, from the interior of drain **1130**, may travel to the exterior of dressing **1180** via vacuum/drainage tube **1135**. When applied to a wound, the dressing as schematically represented in FIG. **11** as **1180** would have draping layer **1156** overlying and sealing a wound-bed. Flow of air and/or of wound-fluid exudate from the wound-bed may then follow the route outlined above, passing through draping layer perforations **1152** to travel into drain **1130** and then outward through tube **1135**.

Dressing **1180** according to the present invention may feature modalities beyond the standard application of negative pressure to wound-beds and drainage of wound-fluid exudate from wound-beds. Among those modalities may be capabilities of wound-flushing, possibly via multi-lumen tube(s) **1135**. Such capability may allow for reversal of the standard direction of fluid flow. Such capability of reverse-flow may be utilized to selectively deliver medicinal or other fluids to a sealed wound-bed at a pause between NPT

sessions of a course of NPT; or to partially irrigate a sealed wound-bed to wet its packing material and wound-bed surfaces (possibly with surfactants) prior to a wound-dressing change upon the conclusion of a course of NPT.

As reverse-flow modalities may be mediated by vacuum/drainage tube **1135**, they and several other non-standard advantages of use of dressings according to the present invention over conventional apparatus and methods may be addressed in the description of vacuum/drainage tube **735** of FIGS. **7**A-C.

As portrayed in FIG. **11**, fixation of position of vacuum/drainage tube **1135** (and, thereby, fixation of position of NPT drain **1030**) may be stabilized by tube-anchorage and tube-exit-sealant component **1145** and/or tube-anchorage and tube-exit-sealant component **1147**. Those tube-anchorage and tube-exit-sealant components may also contribute to the airtightness of dressing **1180**, particularly at and/or along the tube-exit of vacuum/drainage tube **1135** from the interior to the exterior of dressing **1180**. The functionality of tube-anchorage and tube-exit-sealant component **1145** and tube-anchorage and tube-exit-sealant component **1147** may be attained by the sealing of those components exclusively to other components of dressing **1180**, with no contact with patients' skin or other tissues.

FIGS. **12-14** return to the perspective view utilized in FIGS. **1-9**, linked to the assumed directionality of illumination and the orientation of the viewer given in description of FIG. **1**. FIGS. **12-14** are perspective views from above of embodiments of a dressing according to the present invention (as per FIGS. **7-11**) in conjunction with a representative wound (the latter, as per FIGS. **1-2**).

FIG. **12** is a perspective view from above of an embodiment of a dressing **1280** according to the present invention, in conjunction with a representative wound-bed **1202** that may be ready for application of dressing **1280**. As portrayed, wound-bed **1202** may be proximally surrounded by a perilesional area **1200**; both wound-bed **1202** and surrounding perilesional area may be contained within a wider wound-site **1205**.

In FIG. **12**, wound-bed **1202** is portrayed ready for application of dressing **1280**, such state of readiness attained by preparation of wound-bed **1202** and of an appropriate portion of wider wound-site **1205** beyond wound-bed **1280**. Initial preparation of wound-bed **1202** and of wider wound-site **1205** beyond wound-bed **1280** prior to the stage portrayed in FIG. **12** may be representatively portrayed in FIGS. **1-2** and detailed in the corresponding descriptions of FIGS. **1-2**. In FIG. **12**, wound-bed **1202** is portrayed as having been further readied for application of dressing **1280** by the expedient of wound-packing, with packing material within wound-bed **1202** designated as **1227**.

A precautionary accommodation that may have been made in packing wound-bed **1202** with packing material **1227** as part of preparing wound-bed **1202** for application of dressing **1280**, may have been a slight under-packing of wound-bed **1202**. Such under-packing of prepared wound-bed **1202** is depicted in FIG. **12** by packing material **1227** portrayed as almost but not completely filling wound-bed **1202**. Uppermost edges of wound-walls **1204** of slightly under-packed, almost completely filled wound-bed **1202** are shown as not covered by packing material **1227**. (Wound-walls **1204** may be continuous roundabout the entire inner perimeter of wound-bed **1202**. Given the perspective view utilized, sections of right wound-wall **1204** may be blocked from view by the perilesional upper edge of right wound-wall **1204**.)

In FIG. **12**, packing material **1227** is portrayed as comprised of layers of gauze. The right-most region of packing material **1227** is portrayed as the uppermost layer of packing material **1227** within prepared, slightly under-packed wound-bed **1202**. Depiction of wound-packing material **1227** as gauze is not limiting; dressing **1280** may be applied to and used in treating wound-beds filled or packed with materials other than gauze, e.g. foam or other suitable material.

The portrayed dressing **1280** is representative of a range of such dressings differing in the size, shape, capabilities, characteristics, numbers and/or relative orientations of their constituent components. Such variation may be in any or all of, but not limited to, draping layer **1256**, draping layer perforations **1252**, NPT drain **1230**, drain perforations **1232**, fluid-absorbing/transferring layers **1225** and **1229**, vapor sealant sheet **1257**, tube-anchorage and tube-exit-sealant component **1245**, tube-anchorage and tube-exit-sealant component **1247**, vacuum/drainage tube **1235**, and drain-distal tube-terminus adapter **1237**. Description of the range of such variations in such constituent components of NPT drain **1280** may be addressed, partially and representatively, in the description of constituent components of NPT drain **780** of FIGS. **7**A-C.

One of the sets of choices made in selecting dressing **1280** may have been as to the lumen number and functional capabilities of vacuum/drainage tube **1235**. Linked to that set of choices may have been selection for the number, size, shape, capacity and functional capabilities of NPT drain **1230**, along with the number and characteristics of drain-distal tube-terminus adapter **1237**.

The material of draping layer **1256** well beyond the borders of tube-anchorage and tube-exit-sealant component **1247** (or, for dressings **1280** lacking such tube-anchorage and tube-exit-sealant component **1247**, well beyond the borders of vapor sealant sheet **1257**) may have been selectively trimmed to accommodate the body location and contouring of wider wound-site **1205**. (Such trimming of the material of draping layer **1256** may be carried out with consideration of the area of tissue-adhesive surface of such material required to effect an airtight NPT seal roundabout wound-bed **1202** upon application of dressing **1280** to wound-site **1205**.)

FIG. **12** portrays dressing **1280** with backing layer **1262** protective of the wound-facing tissue-adhesive broad surface of draping layer **1256** having been partly removed. Procedurally, backing layer **1262** may be completely removed from wound-facing tissue-adhesive surface(s) of draping layer **1256** prior to application of dressing **1280** to prepared wound-bed **1202** and to an appropriate portion of wider wound-site **1205** beyond wound-bed **1202**.

Additional steps may be taken before application of the dressing **1280** to wound-bed **1202** and to an appropriate portion of wider wound-site **1205** beyond wound-bed **1202**. The additional steps may include finalization of selection of the positioning and orientation of dressing **1280** relative to wound-bed **1202**. Tissue-adhesive characteristics of the wound-facing surface of draping layer **1256** may allow dressing **1280** to be removed, repositioned and re-applied several times before finalization of application to wound-bed **1202** and to the finalized dressing-covered portion of wider wound-site **1205** beyond wound-bed **1202** for a given course of NPT; tissue-adhesive characteristics of the wound-facing surface of draping layer **1256** may allow dressing **1280** to be removed, repositioned and re-applied to wound-site **1205** between NPT sessions of a given course of NPT.

The position and orientation of an NPT drain **1230** within a dressing **1280** may be labeled through visible/tactile marking(s) that may be readily perceived on or through the uppermost surface of a dressing **1280**. With fluid absorbing/transferring layer **1229** possibly blocking NPT drain **1230** from view through the transparent/translucent overlying layer(s), such indication of position and orientation of an NPT drain **1230** within a dressing **1280** may be useful in positioning and orienting the dressing during its application to wound-site **1205**.

FIG. **13** is a perspective view from above of an embodiment of a dressing **1380** according to the present invention, as representatively applied to a representative wound-bed **1302** and to an appropriate portion of a wider wound-site **1305** beyond wound-bed **1302**. FIG. **13** distinguishes between the lower, wound-facing tissue-adhesive surface of draping layer **1356** (designated as wound-facing surface **1355***b*) and the upper, non-wound-facing surface of draping layer **1356** (designated as non-wound-facing surface **1355***a*). FIG. **13** portrays representative positioning and orientation of dressing **1380** relative to wound-bed **1302** and to the wider wound-site **1305** beyond wound-bed **1302**. The portrayed positioning and orientation of dressing **1380** with respect to relevant features of wound-bed **1305**, display several features of diverse roles and levels of significance relative to the functionality of dressing **1380**:

Extensive contact-area of tissue-adhesive wound-facing surface **1355***b* with the tissue-surface of wound-site **1305** roundabout wound-bed **1302**, inclusive of perilesional area **1300**.

Extensive overlap of the area of draping layer perforations **1352** with the area of packing material **1327** within wound-bed **1302**. (The term "area of draping layer perforations" as used herein refers to the area across the broad surface of the draping layer occupied by the transverse perforations through the draping layer, with inclusion of the areas between individual perforations. In the portrayal in FIG. **13**, the area of draping layer perforations **1352** is depicted as closely bounded from without by the area of fluid-absorbing/transferring layer **1329**.)

Approximate centering of the area of draping layer perforations **1352** on the area of wound-packing material **1327** within wound-bed **1302**.

Approximate orientation of NPT drain **1330** along the long axis of wound-bed **1302**.

Orientation of vacuum/drainage tube **1335** relative to wound-site **1305**.

The extent of contact of tissue-adhesive wound-facing surface **1355***b* with the tissue-surface of wound-site **1305** roundabout wound-bed **1302**, and the extent and geometry of overlap of the area of draping layer perforations **1352** with the area of packing material **1327** within wound-bed **1302**, may be factors to have been taken into consideration in selecting a dressing **1380** of specific characteristics. Relevant characteristics may include the sizes and shapes of draping layer **1356**, of fluid-absorbing/transferring layers **1325** and **1329**, and of the area of draping layer perforations **1352**. As constrained by wound-site **1305**'s contours and proximal body-parts, an extensive and close interface of contact between wound-facing surface **1355***b* and the patient's tissue-surface may contribute to obtaining an NPT-required quality of airtight sealing roundabout wound-bed **1302**. With wound-site **1305**'s local conditions of moistness as a factor that may have to be contended with, other characteristics that may have been selected relative to obtaining a high quality interface of dressing **1380** with wound-site **1305**, may include the tissue-adhesion characteristics of wound-facing surface **1355***b*.

With an appropriately selected dressing **1380** in hand, the practitioner may have taken into consideration in initial positioning and orienting of the dressing for its application to wound-site **1305**, the attainment of extensive contact of tissue-adhesive wound-facing surface **1355***b* with the tissue-surface of wound-site **1305** roundabout wound-bed **1302**. Likewise, in such initial positioning and orienting of the dressing, the practitioner may have considered attainment of an extensive overlap of the area of draping layer perforations **1352** with the area of packing material **1327**. Other considerations for such initial, coarse adjustments of general positioning and orientation may include suitability of the direction of vacuum/drainage tube(s) **1335** and drain-distal tube-terminus adapter(s) **1337**, relative both to proximal body-parts and to the NPT vacuum controller and/or other treatment control-and-monitor equipment.

In making fine adjustments for precise positioning and orientation of dressing **1380** prior to finalizing its application to wound-site **1305**, the practitioner may have been guided by considerations of attainment of an overlap of the area of draping layer perforations **1352** with the area of packing material **1327** within wound-bed **1302**, and of a particular orientation of NPT drain **1330** within that geometry. As portrayed in FIG. **13**, the area of draping layer perforations **1352** may be approximately centered on the area of packing material **1327** within wound-bed **1302**. In addition, FIG. **13**'s portrayal of a representatively applied dressing **1380** shows no overlying of draping layer perforations **1352** upon perilesional area **1300**; the outer edges of the area of draping layer perforations **1352**, as portrayed in FIG. **13**, may be well within wound-walls **1304**, with a perimeter of packing material **1327** visible roundabout the area of draping layer perforations **1352**, showcasing a lateral gap between draping layer perforations **1352** and surrounding perilesional area **1300**.

As per the dressing-internal spatial relationships among components of dressings **980**, **1080** and **1180** portrayed in FIGS. **9**, **10** and **11**, respectively, draping layer perforations **1352** on non-wound-facing surface **1355***a* may be directly overlain by fluid absorbing/transferring layer **1325** that may be directly overlain by NPT drain **1330**; during NPT sessions, negative pressure may be applied to wound-bed **1302** via NPT drain **1330**'s drain perforations **1332**. Thus, NPT negative pressure may be most directly applied to packing material **1327** within wound-bed **1302**, and drainage of wound-fluid exudate may be most directly effected, in the region of overlap of the area of packing material **1327** with the area of draping layer perforations **1352**.

A high degree of overlap of the two areas close to their mutual centers may yield an evenly balanced drainage of wound-fluid exudate from all parts of packing material **1327** within wound-bed **1302** under NPT conditions. Mutual centering of the areas may contribute to an even distribution of contraction of wound-walls **1304** under NPT conditions, which may positively impact rapidity and quality of wound-healing. Minimization of overlying of drain layer perforations **1352** upon perilesional area **1300** may minimize contact of wound-fluid exudate with tissues of perilesional area **1300** during NPT sessions; such contact, particularly under NPT conditions, may be deleterious to tissue health. Thus, the extent and geometry of overlap of the area of draping layer perforations **1352** with the area of packing material **1327** within wound-bed **1302** may impact the effectiveness of exudate-drainage, quality of wound-closure, and health of perilesional area **1300**.

An additional consideration during fine adjustments for precise positioning and orientation of dressing **1380** prior to finalizing its application to wound-site **1305**, particularly for surgical wounds, may have been the orientation of NPT drain **1330** relative to the geometry of wound-bed **1302**. In FIG. **13**, NPT drain **1330** is portrayed as oriented approximately along the long axis of wound-bed **1302**, as delimited by surrounding wound-walls **1304**. Wound-bed healing may naturally tend to preferentially promote wound-closure orthogonal to particular cleavage lines (such as Langer's, Kraissl's or Borges's cleavage lines) that lie along particular orientations in different regions of the body. Particularly in surgical wounds, where incisions may have been made parallel to such cleavage lines to take advantage of the preferential directionality of natural wound-closure in a given region of the body, approximate alignment of the NPT drain **1330** with the wound-axis of wound-bed **1302** may be advantageous to the wound-healing process. (Such orientation of NPT drain **1330** as portrayed in FIG. **13** is representative and not limiting; NPT drain(s) **1330** of dressing **1380** according to the present invention may be associated with a wide range of wound-bed shapes, including those with no discernable long axis, such as circular wounds and various irregular wounds. Orientation and location of NPT drain **1330** within wound-bed **1302** may be constrained by many clinical factors, even in the case of surgical wounds; such factors may include the three-dimensional shape of the volume of wound-bed **1302** and the specifics of the contouring of wider wound-site **1305**.)

In application to wound-site **1305** of dressing **1380** according to the present invention, establishment of the position and orientation of dressing **1380** relative to relevant features of wound-bed **1305**, including the geometry of wound-bed **1302**, may have been straightforward, as may be portrayed in FIG. **13**.

With comprehensive visual knowledge of wound-site **1305** obtained through transparent/translucent tube-anchorage and tube-exit-sealant component(s) **1347** (and/or **1345**), and/or through transparent/translucent vapor sealant sheet **1357**, and through transparent/translucent draping layer **1356**; with visual/tactile marking(s) of the position and orientation of NPT drain(s) **1330** within dressing **1380**, perceivable on or through overlying component(s) **1347** (and/or **1345**) and/or overlying sheet **1357**; with edges of all or any of component(s) **1347** (and/or **1345**), of sheet **1357**, of fluid absorbing/transferring layer **1329**, and of layer **1356**, perceivable relative to geometries of relevant features of wound-site **1305** during application of dressing **1380**, the practitioner may have established a set of position and orientation of dressing **1380** with relative ease and precision. Maintenance of the position and orientation of applied dressing **1380** may be effected by the tissue-adhesion characteristics of wound-facing surface **1355***b*. Establishment and maintenance of mutual positions and orientations of constituent components within applied, positioned and oriented dressing **1380**, may be obtained as consequences of the set of structural functionalities of those components preassembled with fixity of position and of orientation within dressing **1380**.

In FIG. **13**, draping layer **1356** of dressing **1380** may be conformed and adhered to the contours of perilesional area **1300** and of the rest of dressing-covered regions of wound-site **1305**. Practitioner manipulation across non-wound-facing surface **1355***a*, smoothing draping layer **1356** over the underlying contours, may have been readily accomplished and may have been guided and facilitated by the transparency/translucency of draping layer **1356**.

As shown in FIG. **13**, the contact-area of tissue-adhesive wound-facing surface **1355***b* with the tissue-surface of wound-site **1305** roundabout wound-bed **1302**, inclusive of perilesional area **1300**, may be extensive. FIG. **13**'s portrayal of an applied dressing **1380** shows no perilesional area **1300** not overlain by draping layer **1356**; in addition, extensive regions of the wider wound-site **1305** beyond perilesion area **1300** may be overlain, and conformed to, by the material of draping layer **1356**, and adhered to by tissue-adhesive wound-facing surface **1355***b*. The extent and quality of the contact-area of tissue-adhesive wound-facing surface **1355***b* with the tissue surface roundabout wound-bed **1302**, may impact production of effective airtight perimeter sealing of wound-bed **1302** under NPT conditions of low wound-bed air pressure.

FIG. **14** is a perspective view from above of an embodiment of a dressing **1480** (corresponding to the embodiment in FIG. **13**) representatively applied, conformed and adhered to a representative prepared wound-site **1405**, under NPT conditions of low air pressure within wound-bed **1402**. The portrayed tube-terminus adapter **1437** of vacuum/drainage tube **1435** displays an outward-directed arrow. The arrow may indicate airtight connection of tube-terminus adapter **1437** to a functioning NPT vacuum controller (not shown) and/or suitable connections for obtaining wound-bed NPT conditions by mean of other treatment control-and-monitor equipment (not shown); such other treatment control-and-monitor equipment may facilitate also such non-standard functionalities of representative dressing **1480** according to the present invention as may be addressed, partially and representatively, in the description of vacuum/drainage tube **735** of FIGS. **7**A-C.

In FIG. **14**, the outward-directed arrow associated with tube-terminus adapter **1147** may indicate, also, the direction of exudate-flow within vacuum/drainage tube **1435** outward from wound-bed **1402**; such outward flow may be consequent to NPT conditions of partial vacuum obtaining within wound-bed **1402**. Those conditions may be produced by an NPT vacuum controller (or an operational vacuum-functionality of other suitable treatment control-and-monitor equipment) connected to tube-terminus adapter **1437**, acting through vacuum/drainage tube **1435** upon the interior of NPT drain **1430**; through drain perforations **1432**, acting upon fluid-absorbing/transferring layers **1425** and **1429**; through draping layer perforations **1452**, acting upon and within packing material **1427** within wound-bed **1402**.

NPT conditions of partial vacuum obtaining within packing material **1427** may contract packing material **1427** and may subject the wound-base and wound-walls of wound-bed **1402** to the effects of such negative pressure. Such effects may include the drawing out of wound-fluid exudate from the wound-base and wound-walls of wound-bed **1402** into and through packing material **1427**; wound-fluid exudate in packing material **1427** may retrace the path of application of partial vacuum, flowing up and out of wound-bed through vacuum/drainage tube **1435**.

With the contraction of packing material **1427** and the application of partial vacuum to the wound-base and wound-walls of wound-bed **1402**, wound-bed **1402** may be contracted; as portrayed in FIG. **14**, wound-bed **1402** may be smaller than the same-scale portrayal of wound-bed **1302** of FIG. **13**, particularly orthogonal to, and approximately symmetrically medially toward, the long axis of wound-bed **1402**, along which NPT drain **1430** may be centered and oriented. In FIG. **14**, the edges of perilesional area **1400** proximal to wound-bed **1402** are portrayed as pulled inward toward the center of wound-bed **1402**, mostly medially

toward the long axis of wound-bed **1402**; skin-tension lines in perilesional area **1400** proximal to wound-bed **1402** may indicate the mainly medial stretching of the upper edges of the wound-walls toward contracted wound-bed **1402**. Regions of wider wound-site **1405** beyond perilesional area **1400** may, as portrayed in FIG. **14**, be somewhat distorted as consequent to NPT conditions of partial vacuum obtaining within wound-bed **1402**.

Contraction of wound-bed **1402** vertically downward along the viewer's line-of-sight, may also typically occur under NPT conditions of partial vacuum obtaining within wound-bed **1402**. In FIG. **14**, draping layer **1456**, particularly above contracted wound-bed **1402**, may be pulled downward into the depth of wound-bed **1402**, pressed against contracted packing material **1427**; packing material **1427** may be portrayed distorted (relative to the portrayal of packing material **1327** of FIG. **13**), compressed within the vacuum-reduced volume of wound-bed **1402**. Likewise, through a set of distortions of their area-borders (relative to their portrayals in FIG. **13**), FIG. **14** shows the distortions medially inward and vertically downward of tube-anchorage and tube-exit-sealant components **1447** and **1445**, of vapor sealant sheet **1457**, and of fluid-absorbing/transferring layers **1429** and **1425**. Likewise, vacuum/drain tube **1435** proximal to its exit from below tube-anchorage and tube-exit-sealant component **1447**, and following along the tube-exit channel beneath component **1447** in the direction of the viewer's station beyond and approximately in line with the figure's "FIG. **14**," may be distorted downward toward NPT drain **1430**. Depending on the characteristics of flexibility of NPT drain **1430**, NPT drain **1430** may be distorted by NPT conditions of partial vacuum obtaining within wound-bed **1402**.

The wound-base and wound-walls of wound-bed **1402** may be under mechanical strain consequent to NPT conditions of partial vacuum ("NPT negative pressure") obtaining within wound base **1402**. While such strain may be contributory to NPT-enhancement of wound-healing, the intensity of the strain may need to be limited to accommodate the sensitivities and strengths of the tissues of the wound-base and wound-walls of wound-bed **1402**. NPT sessions featuring NPT drain **1430** according to the present invention applied to a prepared wound-site **1405**, may accelerate NPT-enhancement of wound-healing without over-straining wound-walls and wound-base tissues of wound-bed **1402**.

Thus, apparatus and methods that streamline and simplify preparing a wound-site for negative pressure treatment have been provided. Persons skilled in the art will appreciate that the present invention can be practiced by other than the described embodiments, which are presented for purposes of illustration rather than of limitation, and that the present invention is limited only by the claims that follow.

The invention claimed is:

1. A wound dressing comprising:

a wound-fluid drain for use in negative pressure wound treatment ("NPT drain");

a vacuum/drainage tube comprising a terminus associated with the NPT drain, said NPT drain being configured to non-simultaneously withdraw fluid from a wound and deliver fluid to the wound;

fluid-absorbing/transferring layer for distributing negative pressure from the NPT drain, said fluid-absorbing/transferring material being in contact with the NPT drain;

a vapor sealant sheet formed from a hydrocolloid material, the vapor sealant sheet that overlies the fluid-absorbing/transferring layer, said vapor sealant sheet comprising an adhesive located over at least a central zone of a wound-facing surface of the vapor sealant sheet, the adhesive for adhering the vapor sealant sheet to the fluid-absorbing/transferring layer, said adhesive that mechanically maintains the placement and orientation of fluid-absorbing/transferring layer relative to the vapor sealant sheet; and

a tube-anchorage component that is in contact with at least a portion of the vapor sealant sheet and a portion of the fluid-absorbing/transferring layer, the tube-anchorage component for mechanically maintaining placement of the NPT drain relative to the fluid-absorbing/transferring layer.

2. A wound dressing comprising:

a wound-fluid negative pressure treatment ("NPT") drain;

a vacuum/drainage tube comprising a terminus associated with the NPT drain;

fluid-absorbing/transferring layer for distributing negative pressure from the vacuum/drainage tube, said fluid-absorbing/transferring layer being in contact with the vacuum/drainage tube;

a vapor sealant sheet formed from a hydrocolloid material, the vapor sealant sheet that overlies the fluid-absorbing/transferring layer, said vapor sealant sheet comprising an adhesive located over at least a central zone of a wound-facing surface of the vapor sealant sheet, the adhesive for adhering the vapor sealant sheet to the fluid-absorbing/transferring layer, said adhesive that mechanically maintains the placement and orientation of the fluid-absorbing transferring layer relative to the vapor sealant sheet;

a first tube-anchorage component that is in contact with at least a portion of the vapor sealant sheet; and

a second tube-anchorage component, the first and second tube-anchorage components for mechanically maintaining the NPT drain's placement relative to the fluid-absorbing/transferring layer.

3. A wound dressing comprising:

a vacuum/drainage tube comprising a terminus;

a fluid-absorbing/transferring layer for distributing negative pressure from the vacuum/drainage tube, said fluid-absorbing/transferring layer being in contact with the vacuum/drainage tube;

a vapor sealant sheet formed from a hydrocolloid material, the vapor sealant sheet that overlies the fluid-absorbing/transferring layer, said vapor sealant sheet comprising an adhesive located over at least a central zone of a wound-facing surface of the vapor sealant sheet, the adhesive for adhering the vapor sealant sheet to the fluid-absorbing/transferring layer, said adhesive that mechanically maintains the placement and orientation of the fluid-absorbing transferring layer relative to the vapor sealant sheet; and

a tube-exit-sealant component for mechanically maintaining the vacuum/drainage tube's placement relative to the fluid-absorbing/transferring layer.

4. The wound dressing of claim **1** wherein the fluid-absorbing/transferring layer comprises gauze.

5. The wound dressing of claim **1** wherein the fluid-absorbing/transferring layer comprises foam.

6. The wound dressing of claim **1** wherein the fluid-absorbing/transferring layer comprises an upper layer and a lower layer.

7. The wound dressing of claim **6** wherein the NPT drain is enfolded between the lower layer and the upper layer.

8. The wound dressing of claim **2** wherein the vacuum/drainage tube comprises a plurality of lumens.

9. The wound dressing of claim **8** wherein the plurality of lumens comprises at least one lumen configured to deliver fluid to a wound and at least one lumen configured to withdraw fluid from the wound.

10. The wound dressing of claim **8** wherein at least one lumen is configured to convey a medical device.

11. The wound dressing of claim **3** wherein the vacuum/drainage tube terminus is associated with a negative pressure treatment ("NPT") drain.

12. The wound dressing of claim **11** wherein the NPT drain comprises a plurality of NPT drains.

13. The wound dressing of claim **3** wherein the vacuum/drainage tube is further associated with an external vacuum source.

* * * * *