US 20100042021A1

(19) United States

(12) Patent Application Publication

HU et al.

(10) Pub. No.: US 2010/0042021 A1

(43) Pub. Date: Feb. 18, 2010

(54) **DEVICES AND METHODS FOR TREATMENT OF DAMAGED TISSUE**

(75) Inventors: **Dean HU**, San Leandro, CA (US); **Moshe Pinto**, Mountain View, CA (US); **Kenton Fong**, Mountain View, CA (US)

Correspondence Address:
MORRISON & FOERSTER LLP
755 PAGE MILL RD
PALO ALTO, CA 94304-1018 (US)

(73) Assignee: **Spiracur, Inc.**, Redwood City, CA (US)

(21) Appl. No.: **12/372,661**

(22) Filed: **Feb. 17, 2009**

Related U.S. Application Data

(60) Provisional application No. 61/028,835, filed on Feb. 14, 2008.

Publication Classification

(51) **Int. Cl.**
A61H 7/00 (2006.01)

(52) **U.S. Cl.** **601/6**

(57) **ABSTRACT**

Methods and devices for treatment of damaged tissue are disclosed, including treatment of wounds by employing non-electrically powered, reduced pressure therapy devices. Maintenance and control of the sub atmospheric pressure exerted may be provided by such devices while minimizing discomfort to the user. The devices may be configured to be worn inconspicuously underneath clothing.

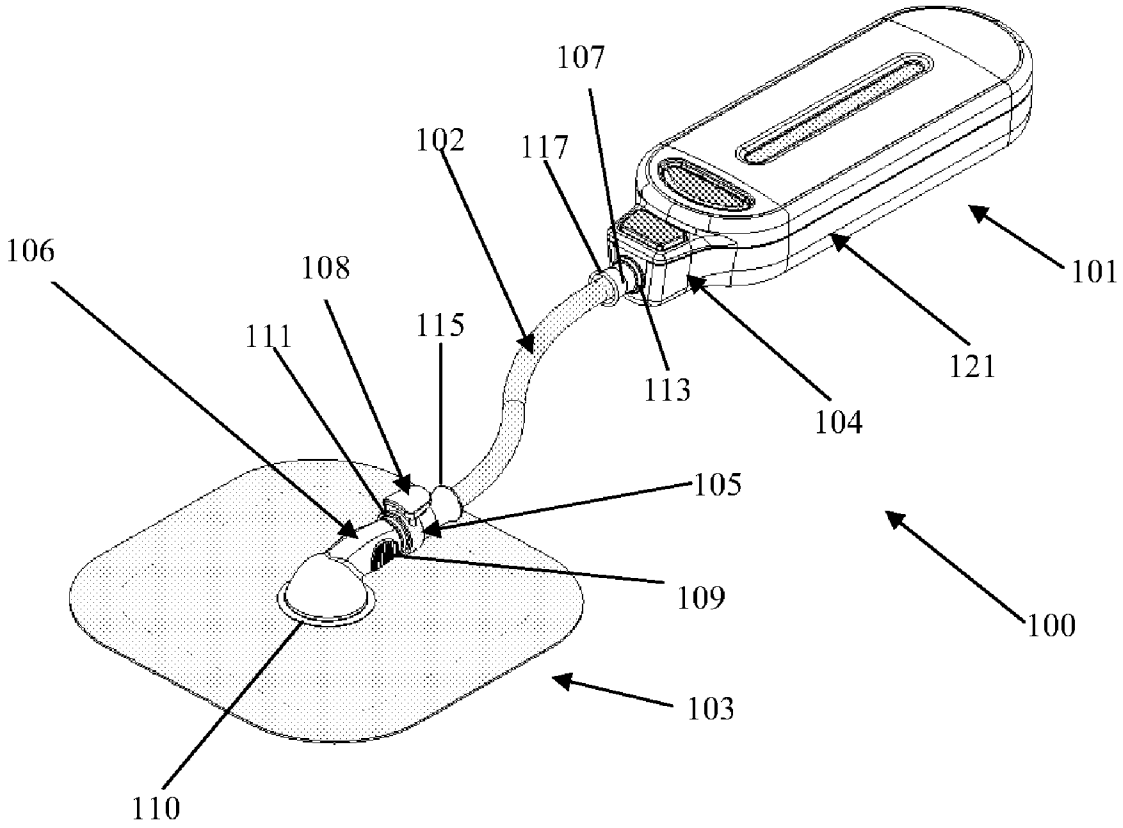

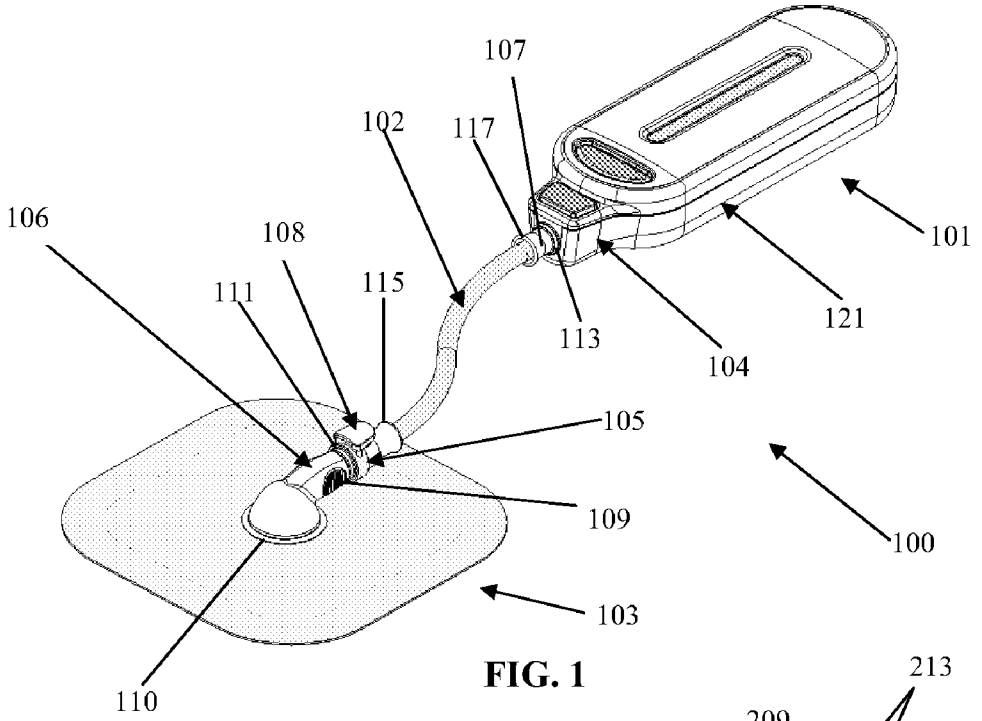
107
102
117
106
108
111
115
101
121
113
104
105
109
100
103
110

FIG. 1

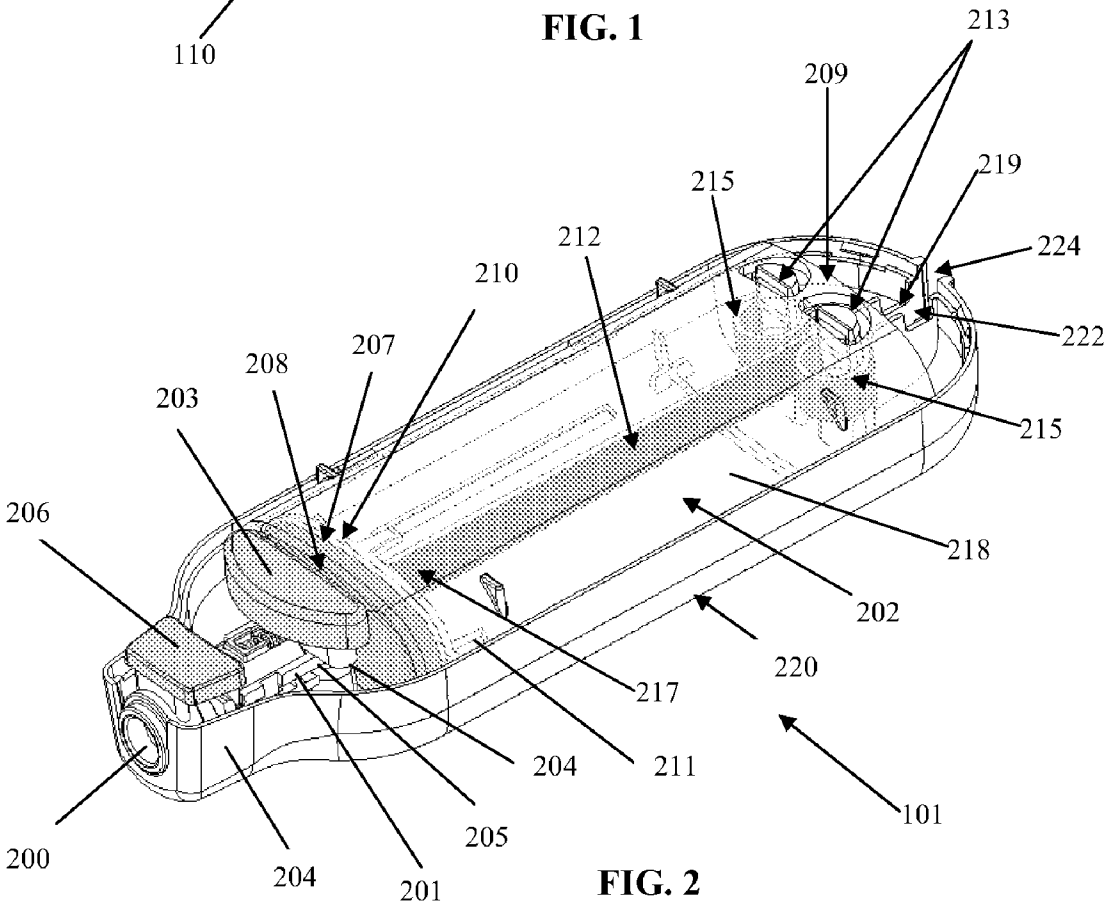
213
209
219
215
224
212
210
222
207
208
203
215
206
218
202
220
217
204
211
101
200
205
204
201

FIG. 2

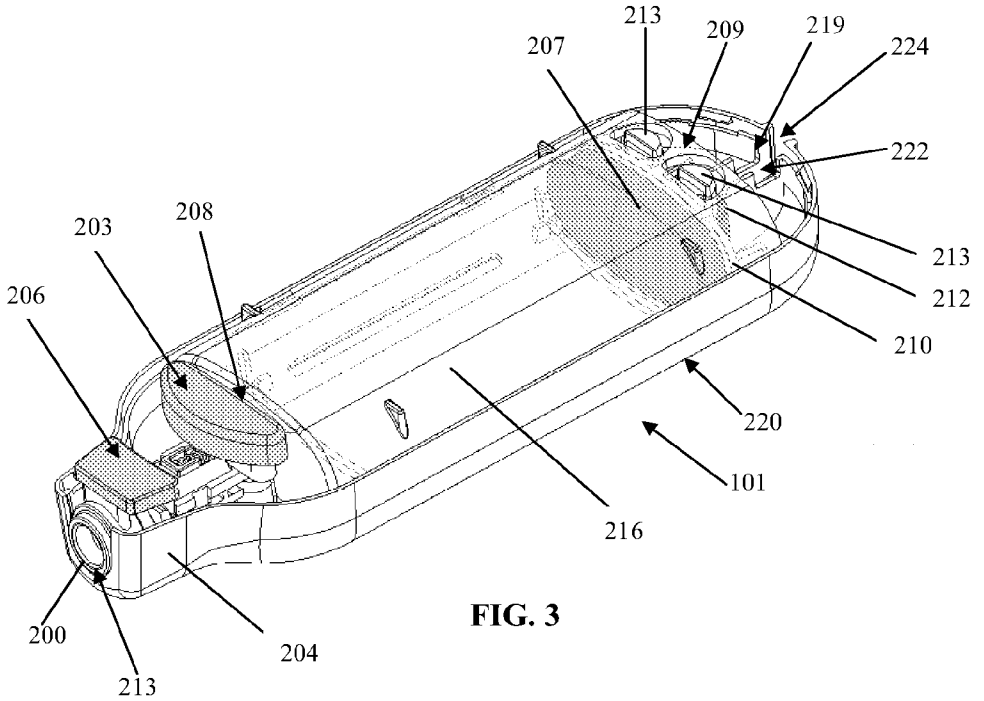
213
209
219
224
207
222
203
208
213
212
206
210
220
101
216
200
204
213

FIG. 3

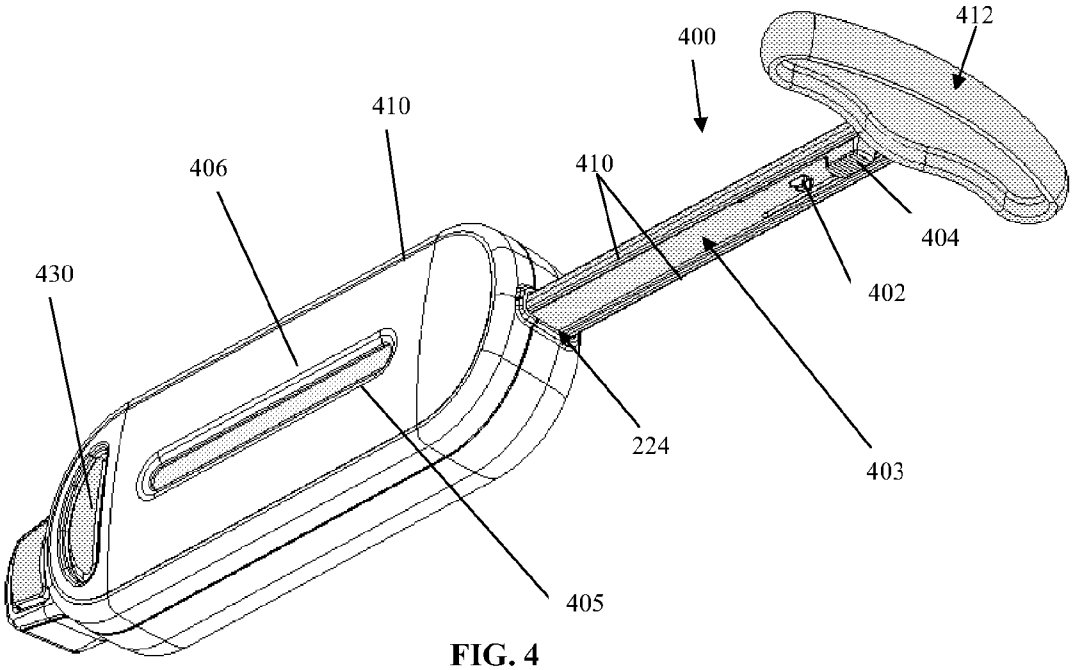
412
400
410
406
410
404
430
402
224
403
405

FIG. 4

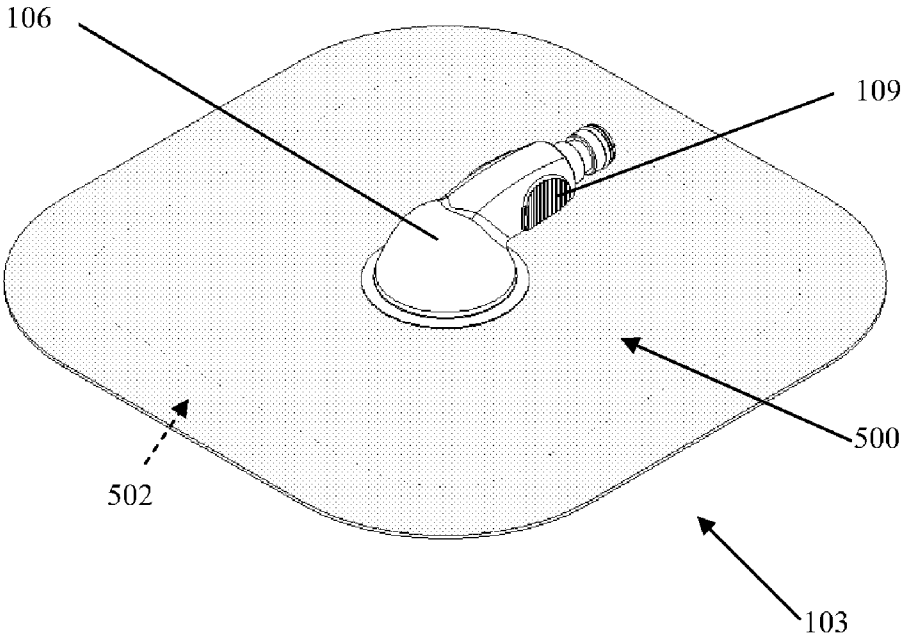

FIG. 5

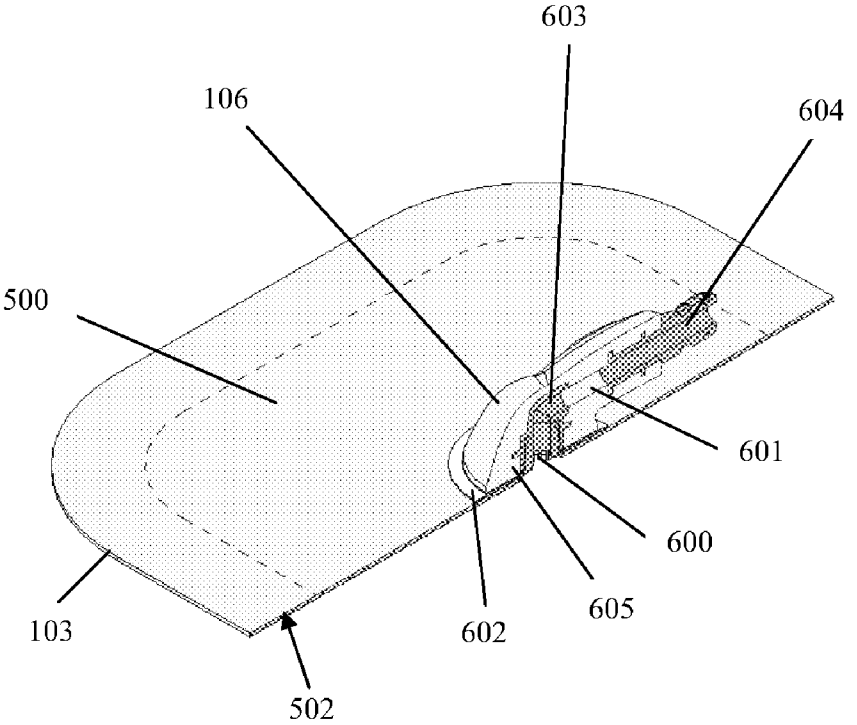

FIG. 6

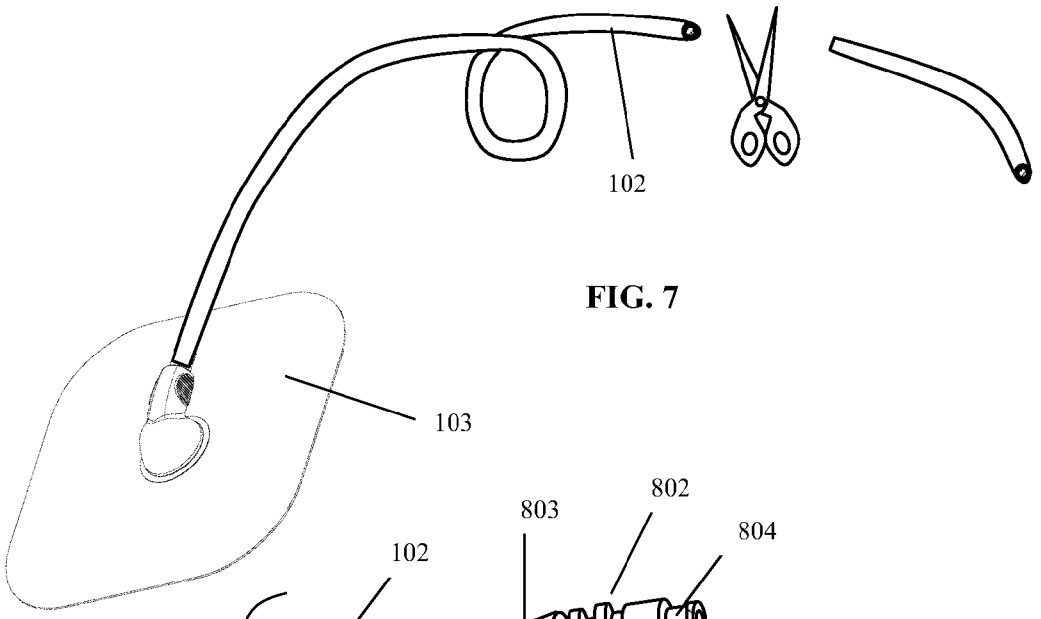

FIG. 7

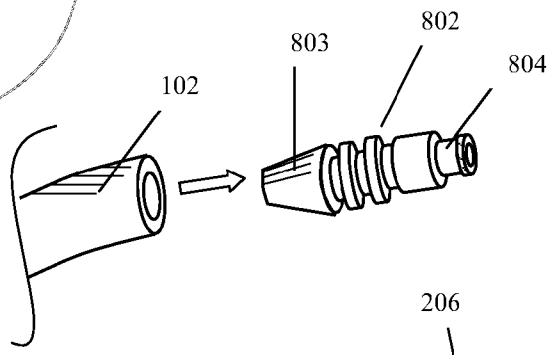

FIG. 8A

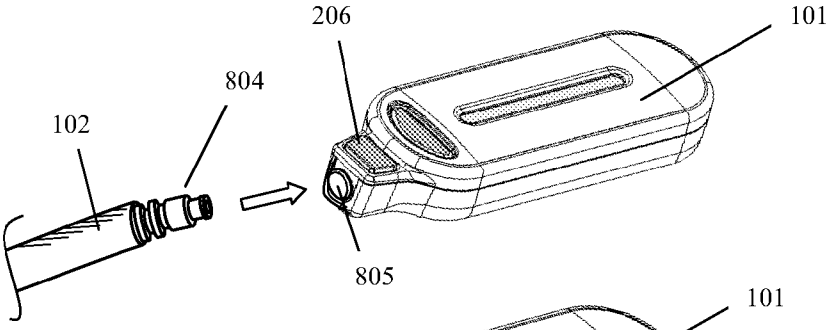

FIG. 8B

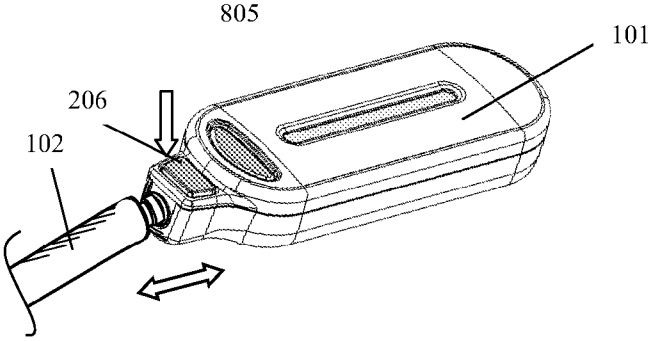

FIG. 8C

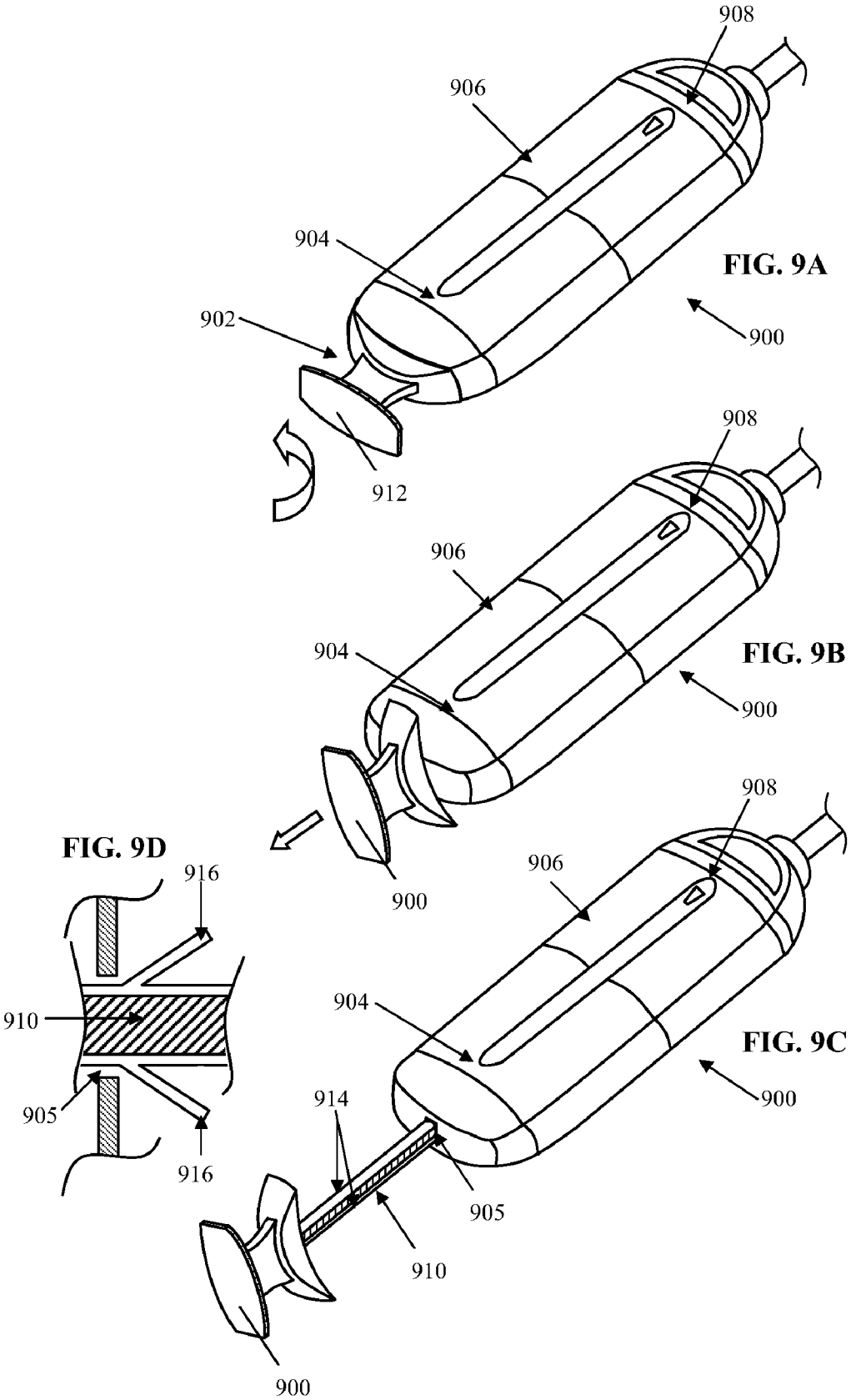
908
906
904
902
900
912
FIG. 9A
908
906
904
900
900
FIG. 9B
908
906
904
900
914
905
910
900
FIG. 9C
FIG. 9D
916
910
905
916

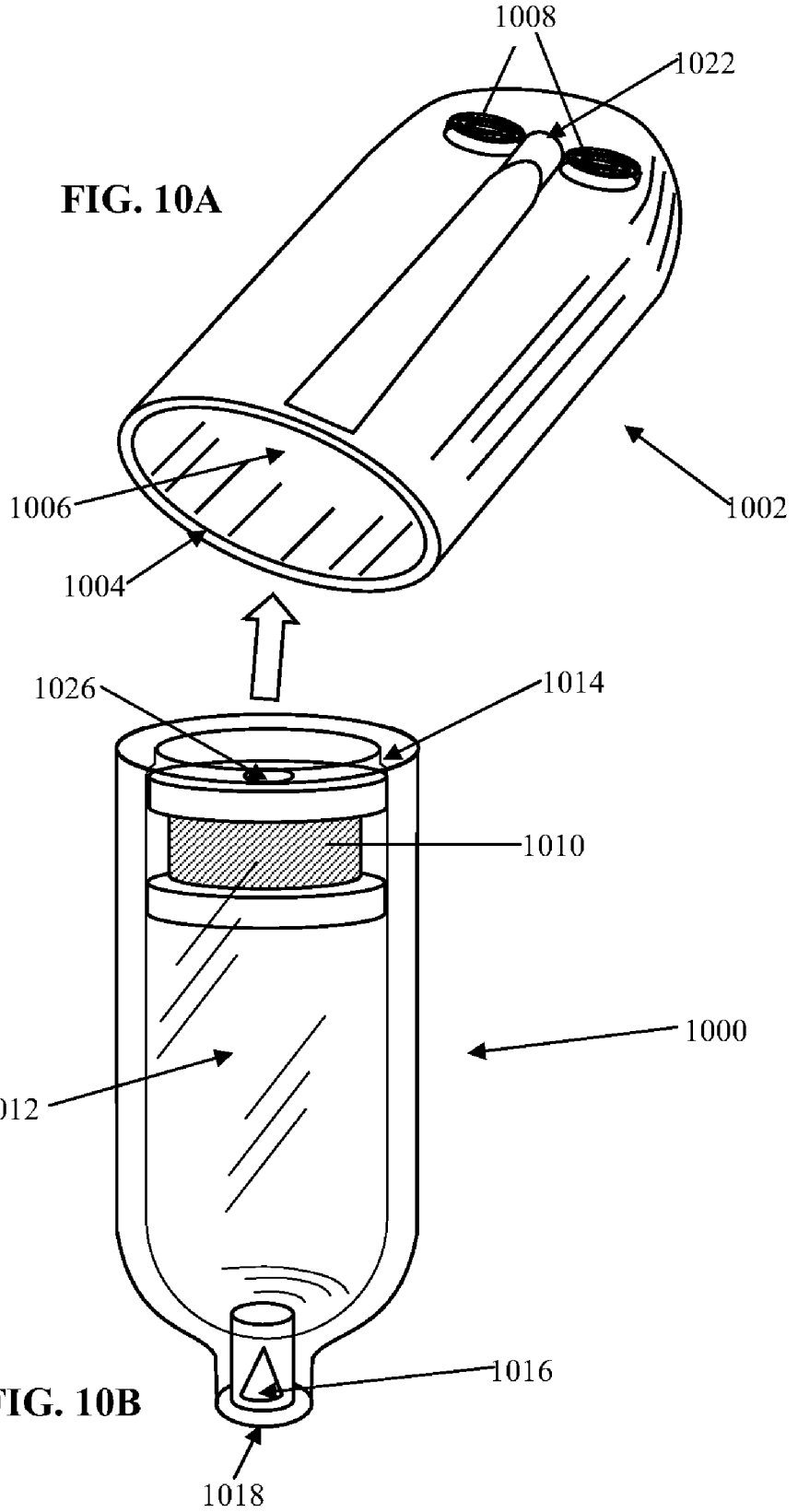

FIG. 10A

FIG. 10B

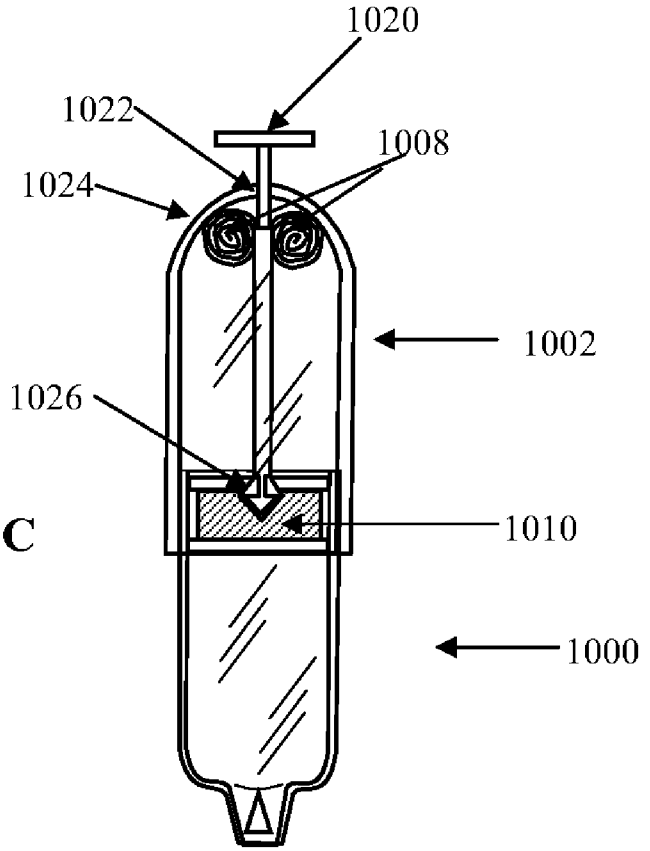

FIG. 10C

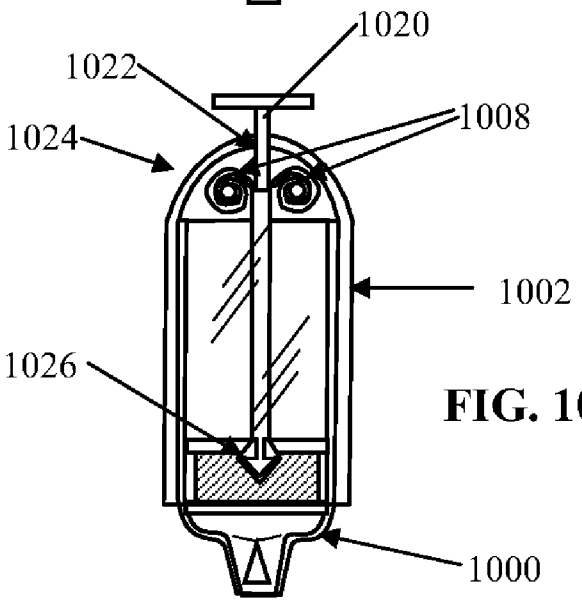

FIG. 10D

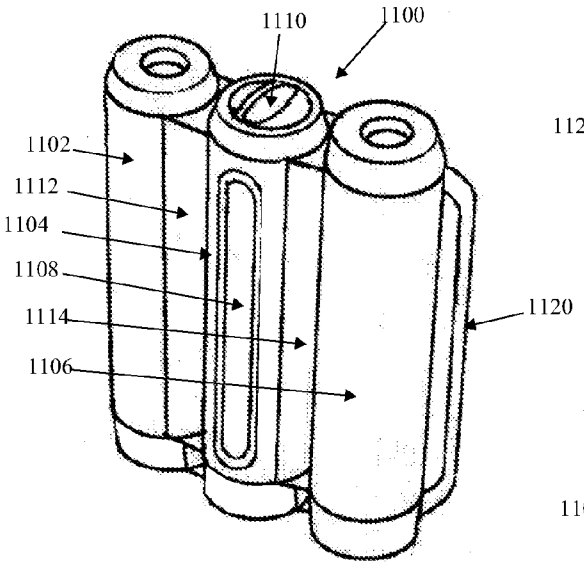

FIG. 11A

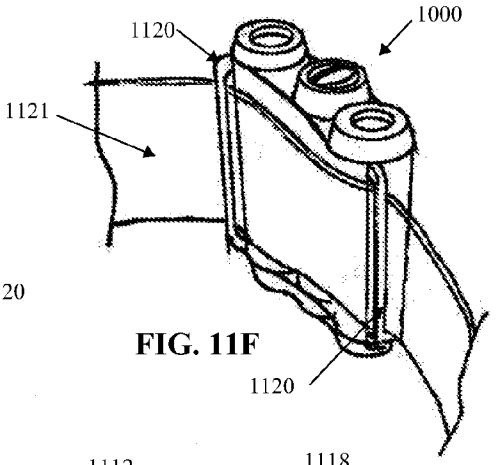

FIG. 11F

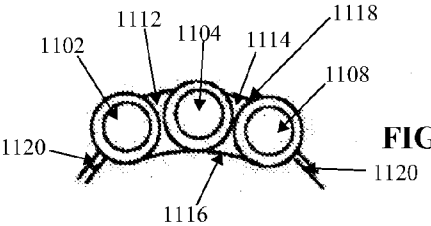

FIG. 11B

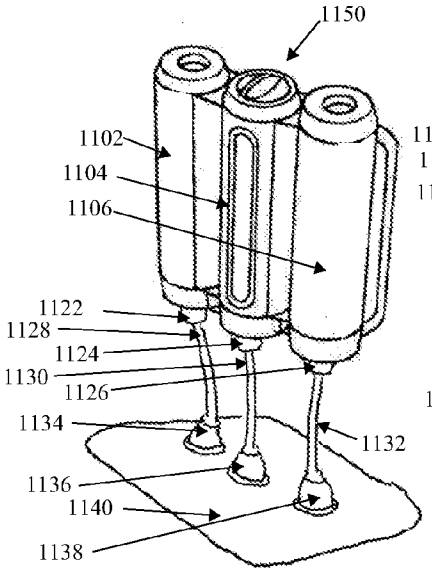

FIG. 11C

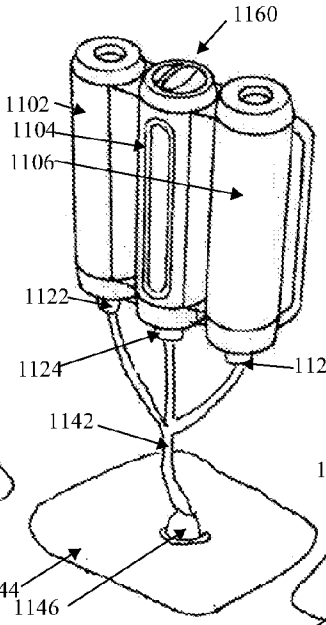

FIG. 11D

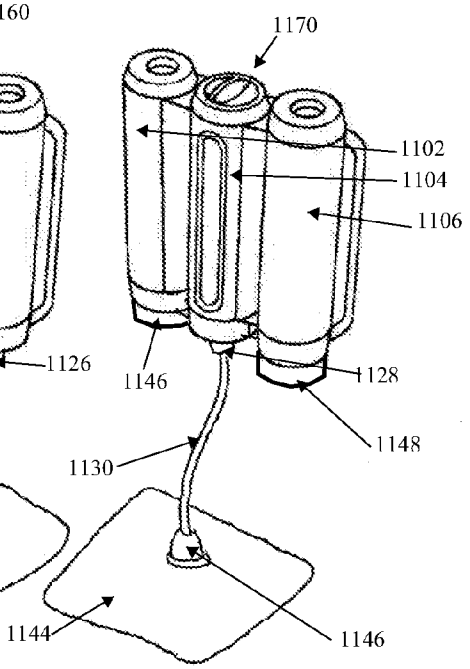

FIG. 11E

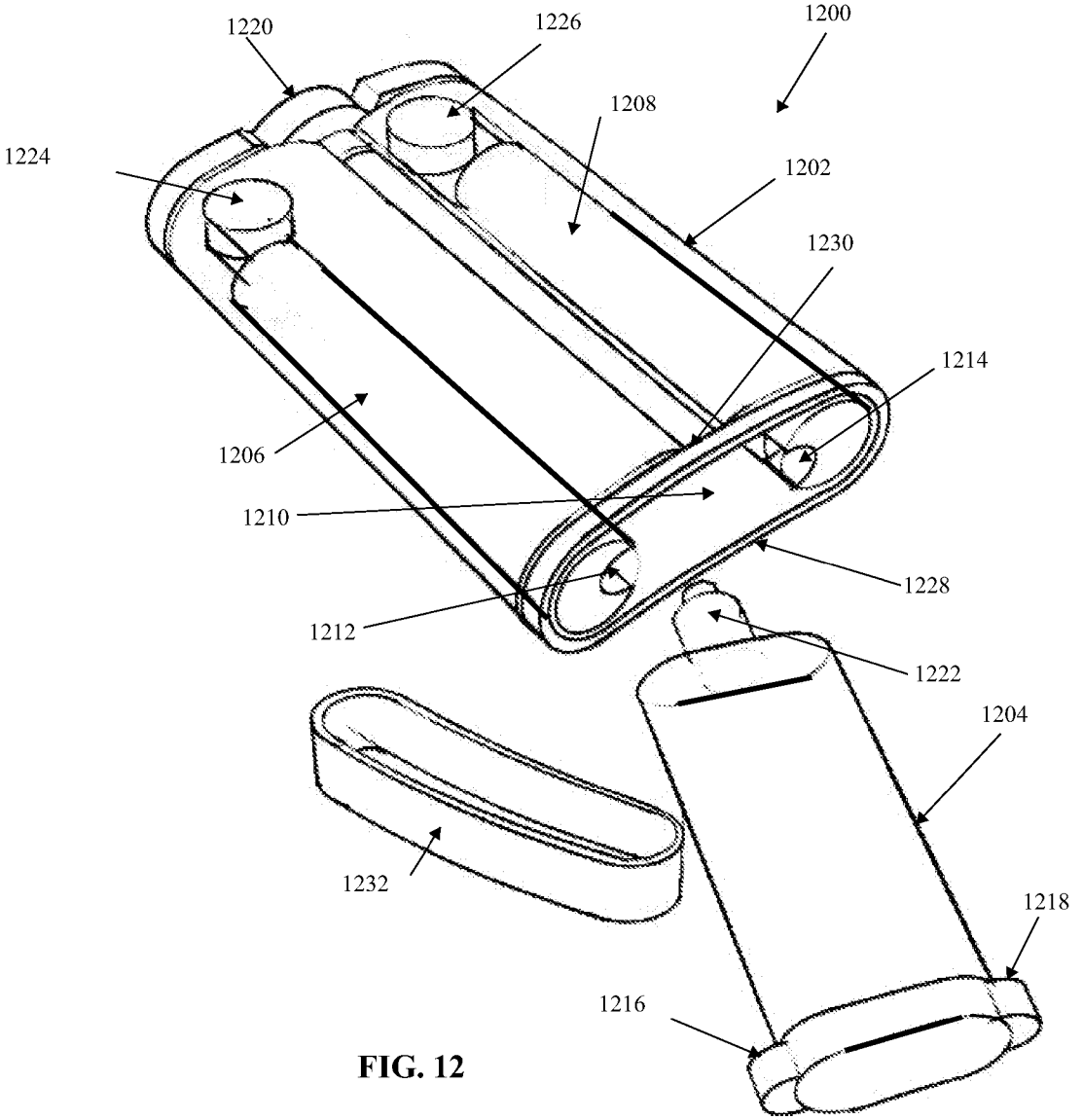
1200
1220
1226
1208
1224
1202
1230
1214
1206
1210
1228
1212
1222
1204
1232
1218
1216

FIG. 12

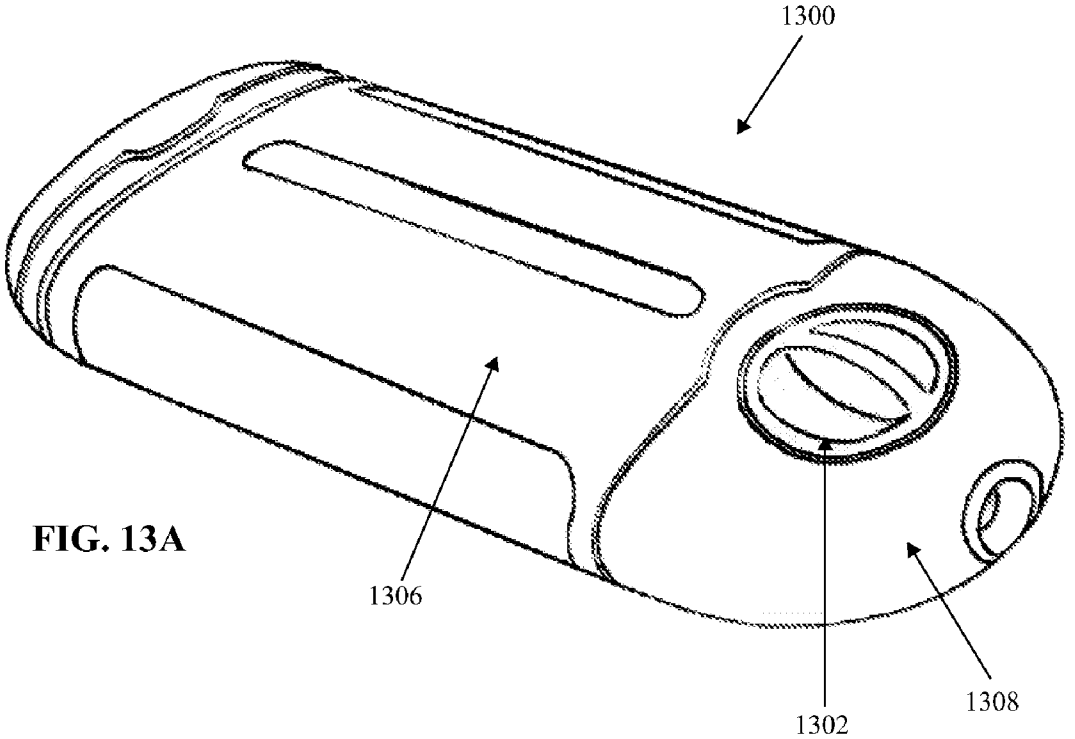

FIG. 13A

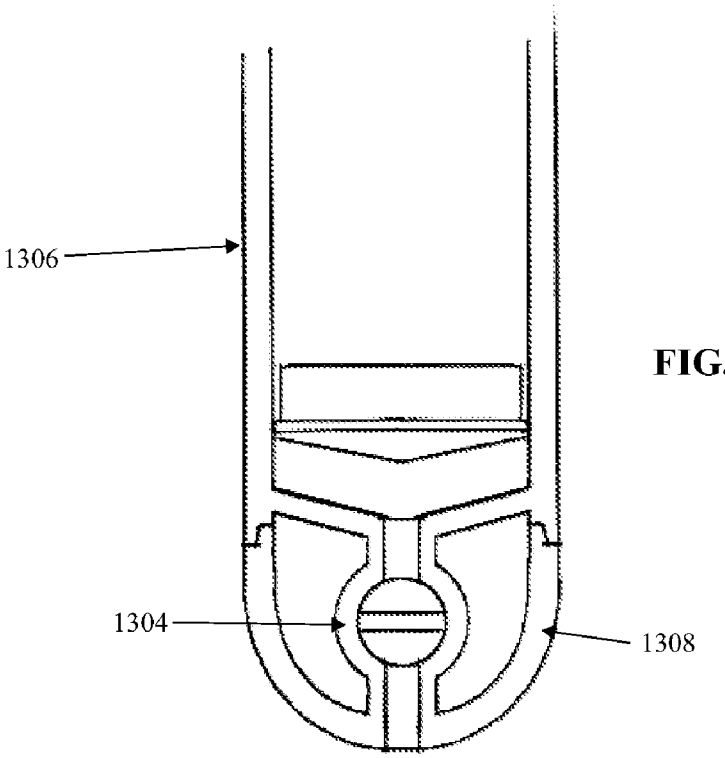

FIG. 13B

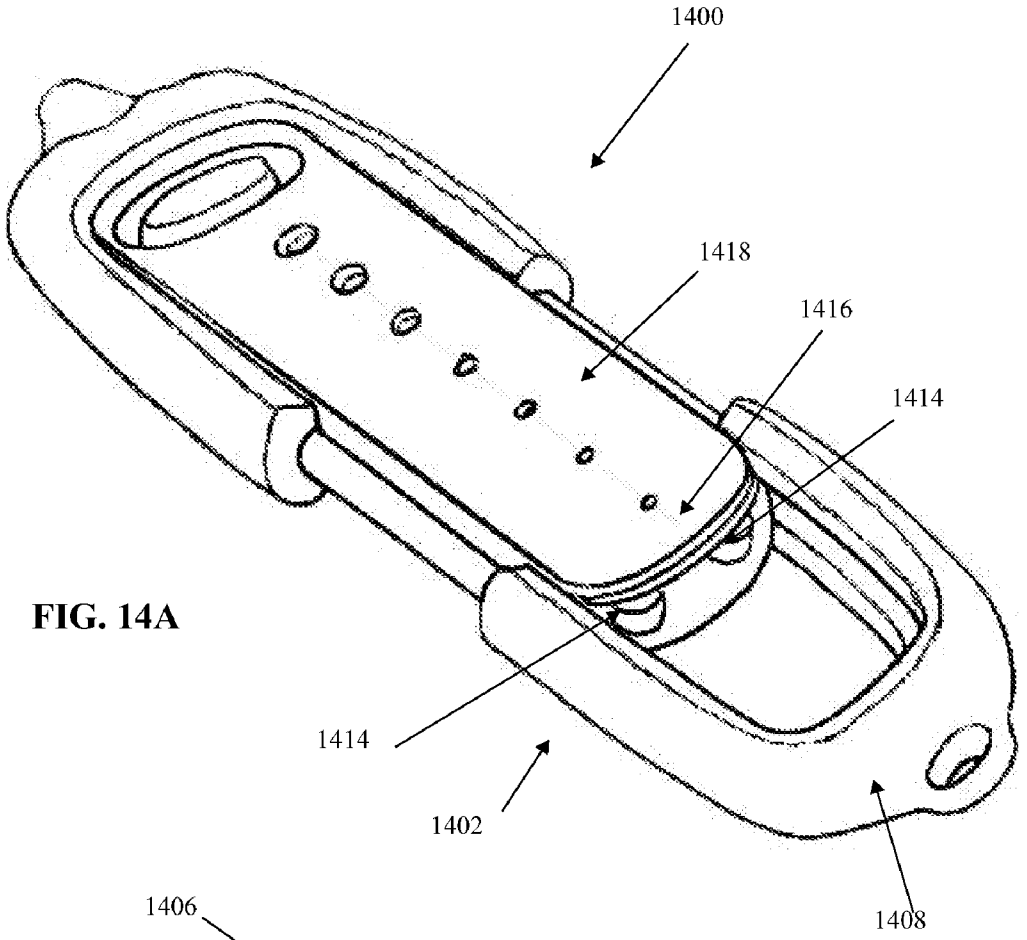

FIG. 14A

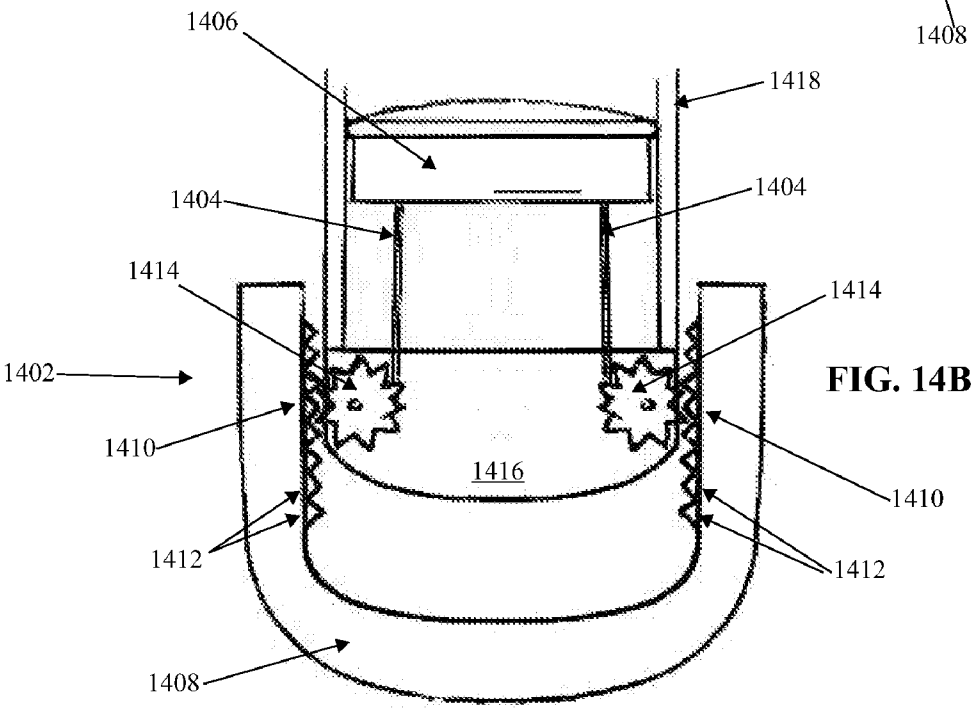

FIG. 14B

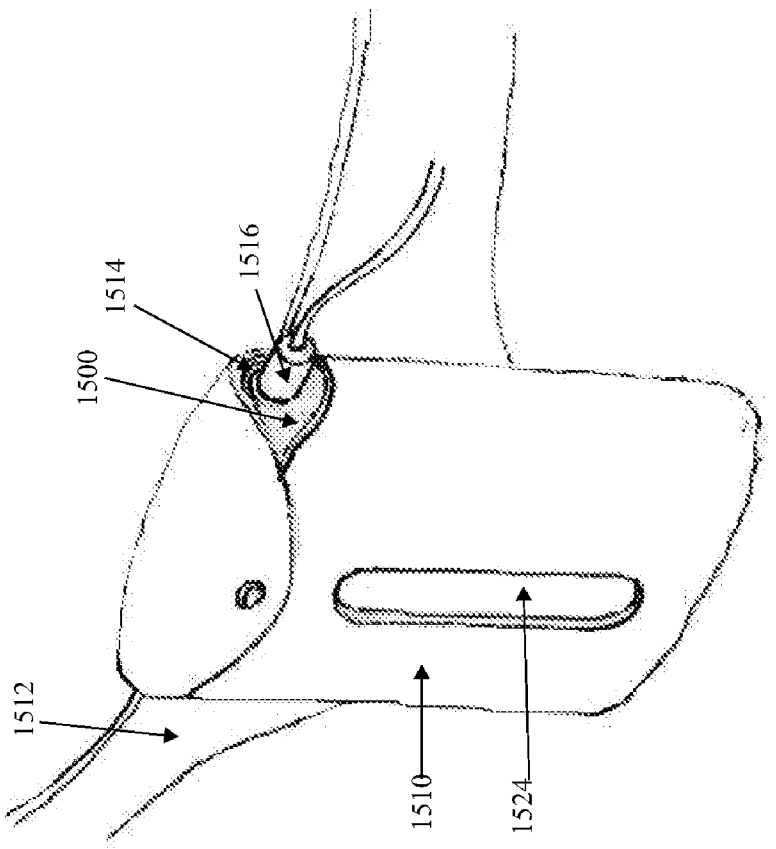

FIG. 15B

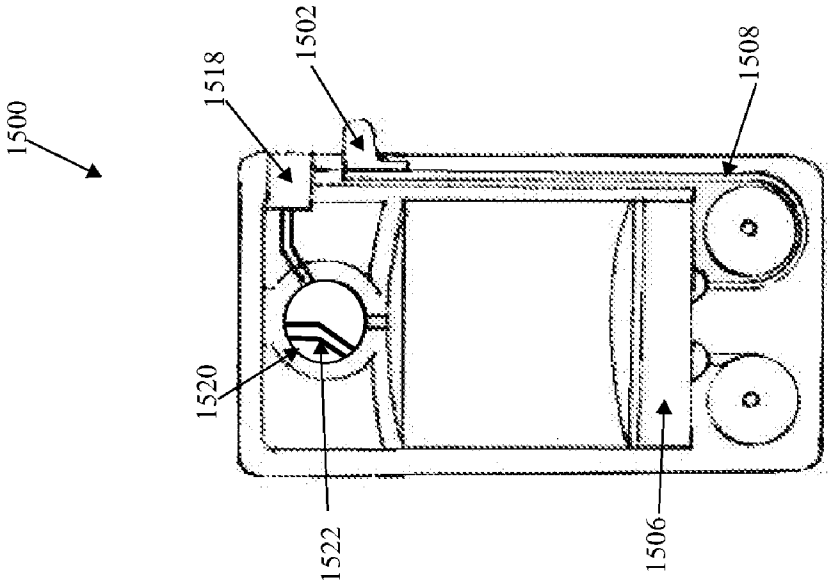

FIG. 15A

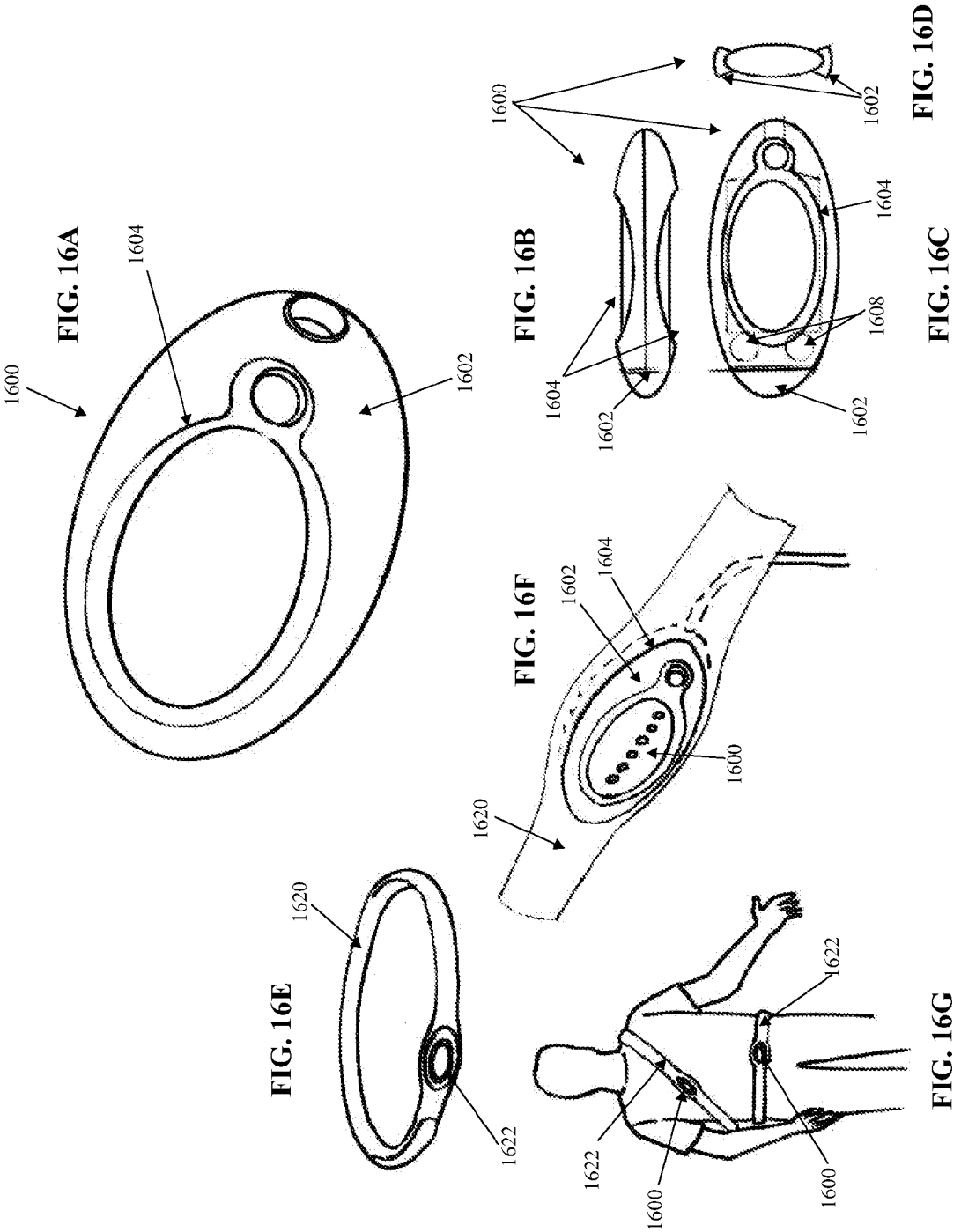

FIG. 16A

FIG. 16B

FIG. 16C

FIG. 16D

FIG. 16E

FIG. 16F

FIG. 16G

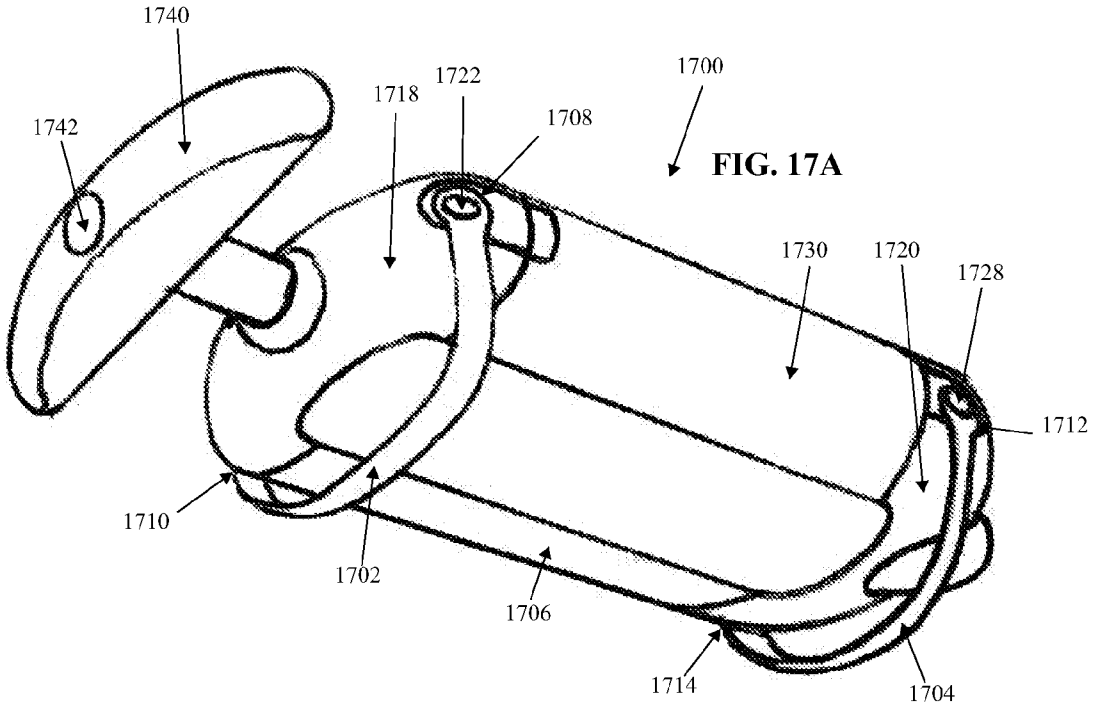

FIG. 17A

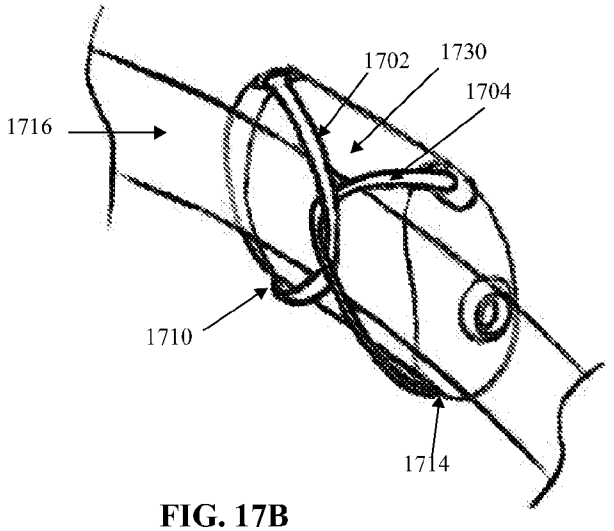

FIG. 17B

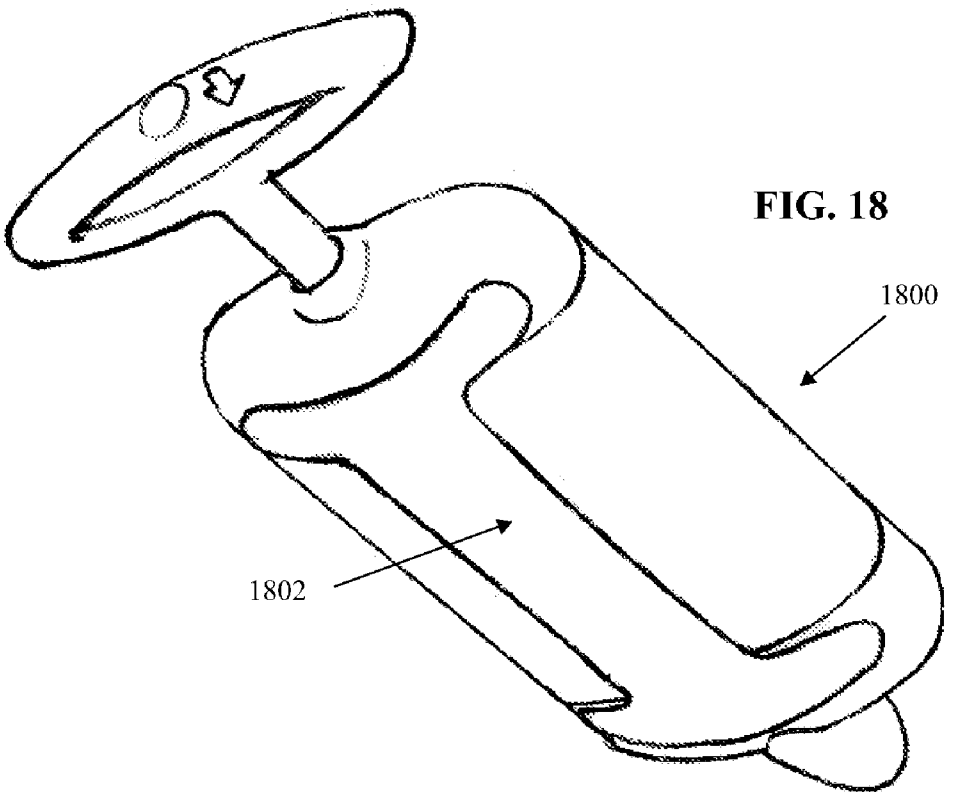

FIG. 18

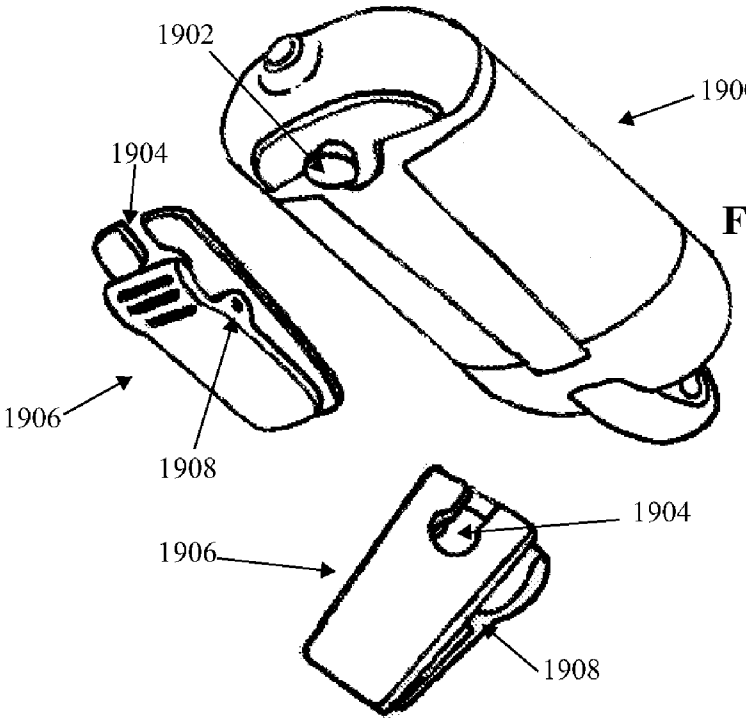

FIG. 19A

FIG. 19B

FIG. 20

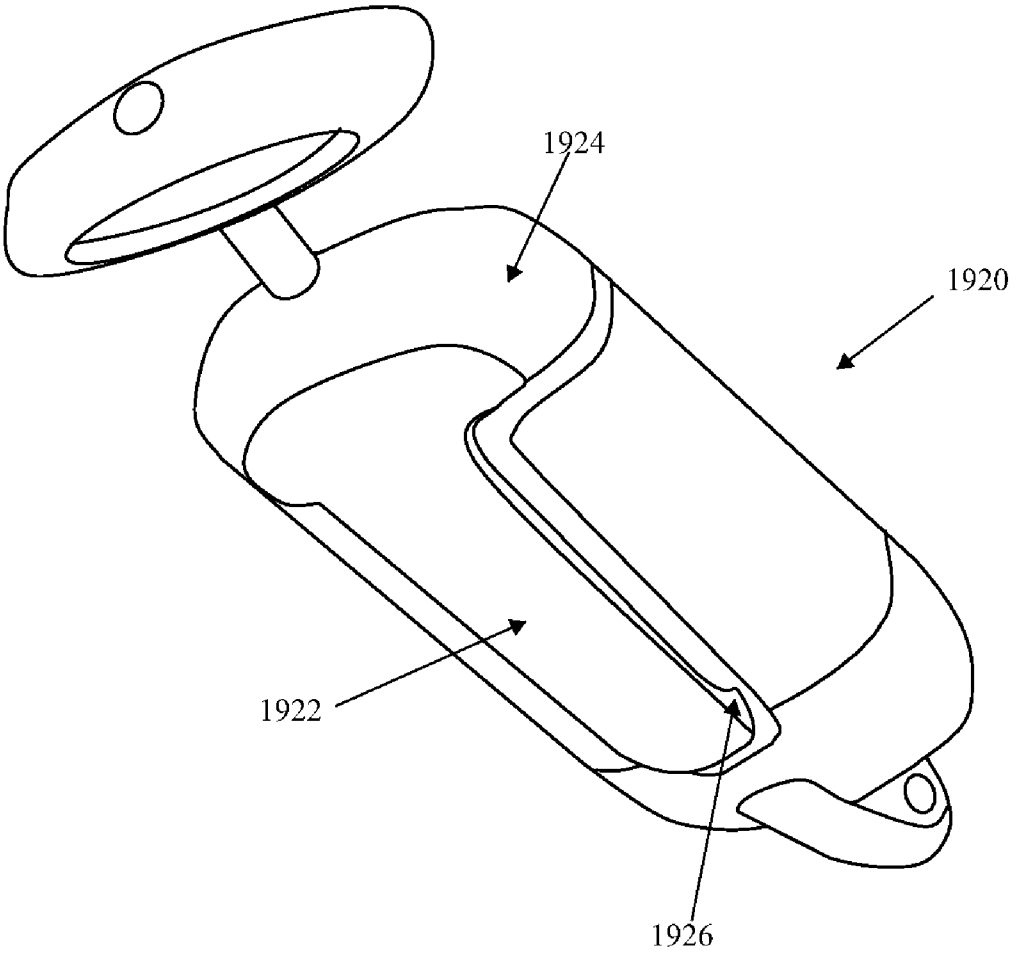

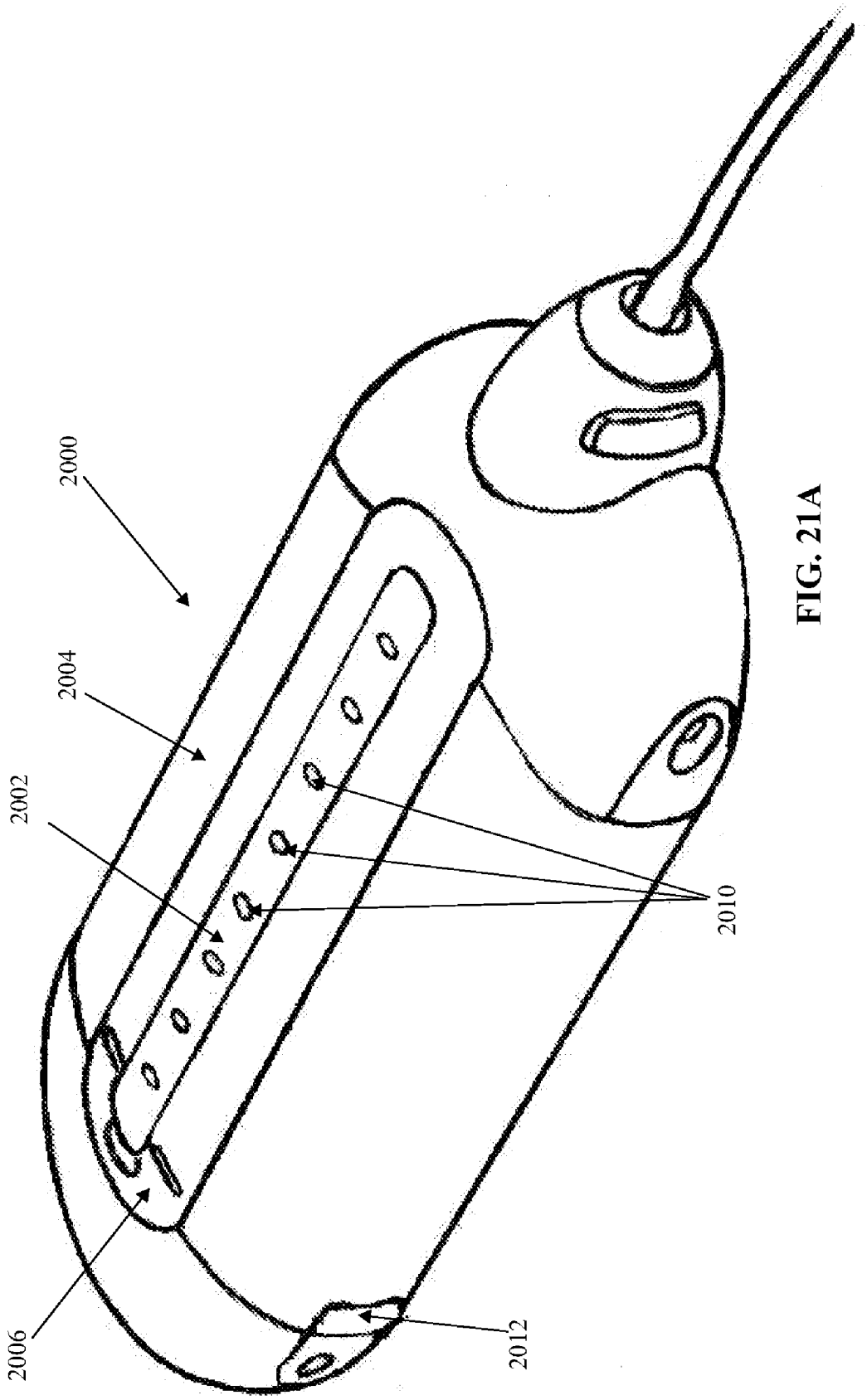

FIG. 21A

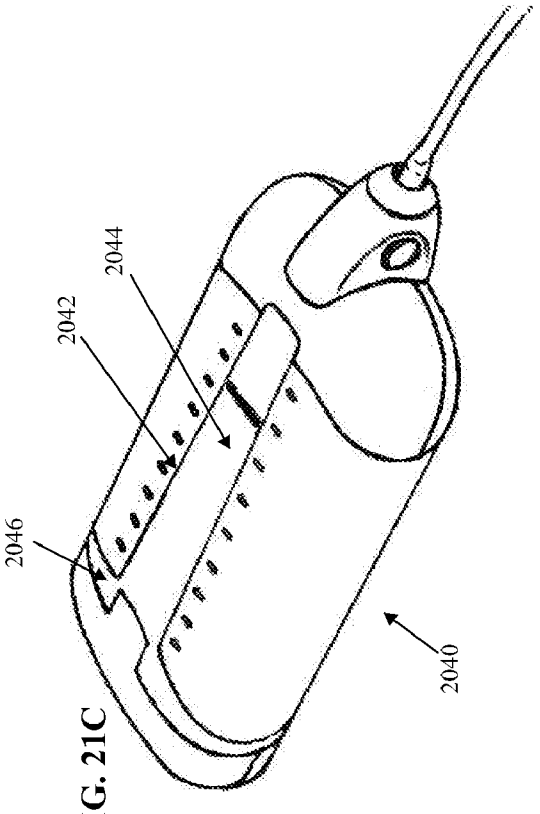

FIG. 21C

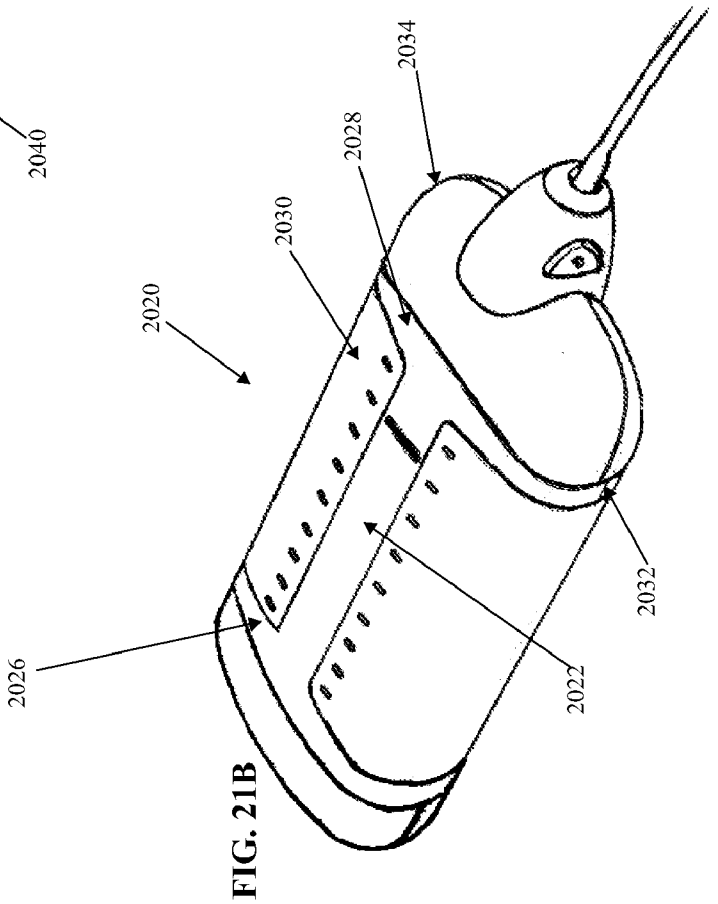

FIG. 21B

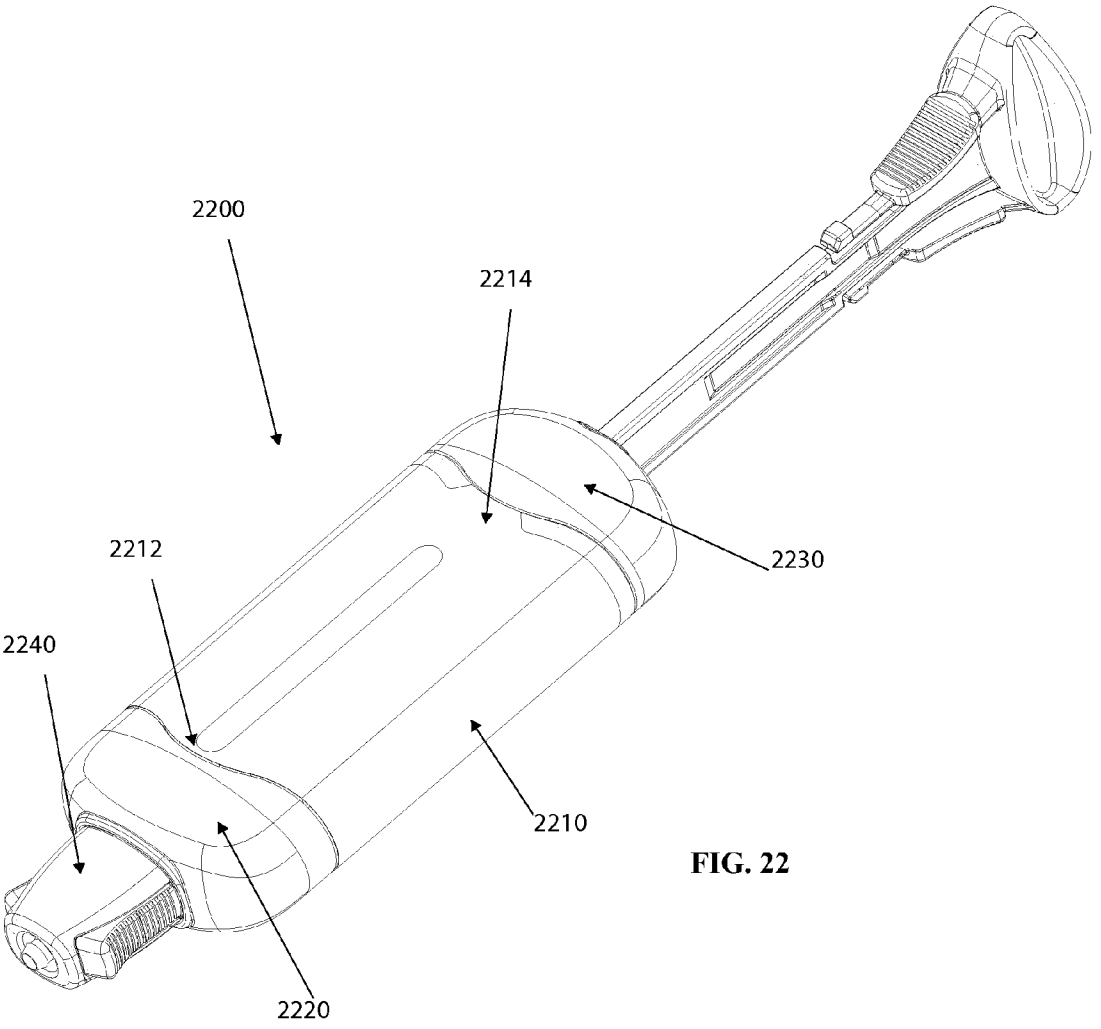

FIG. 22

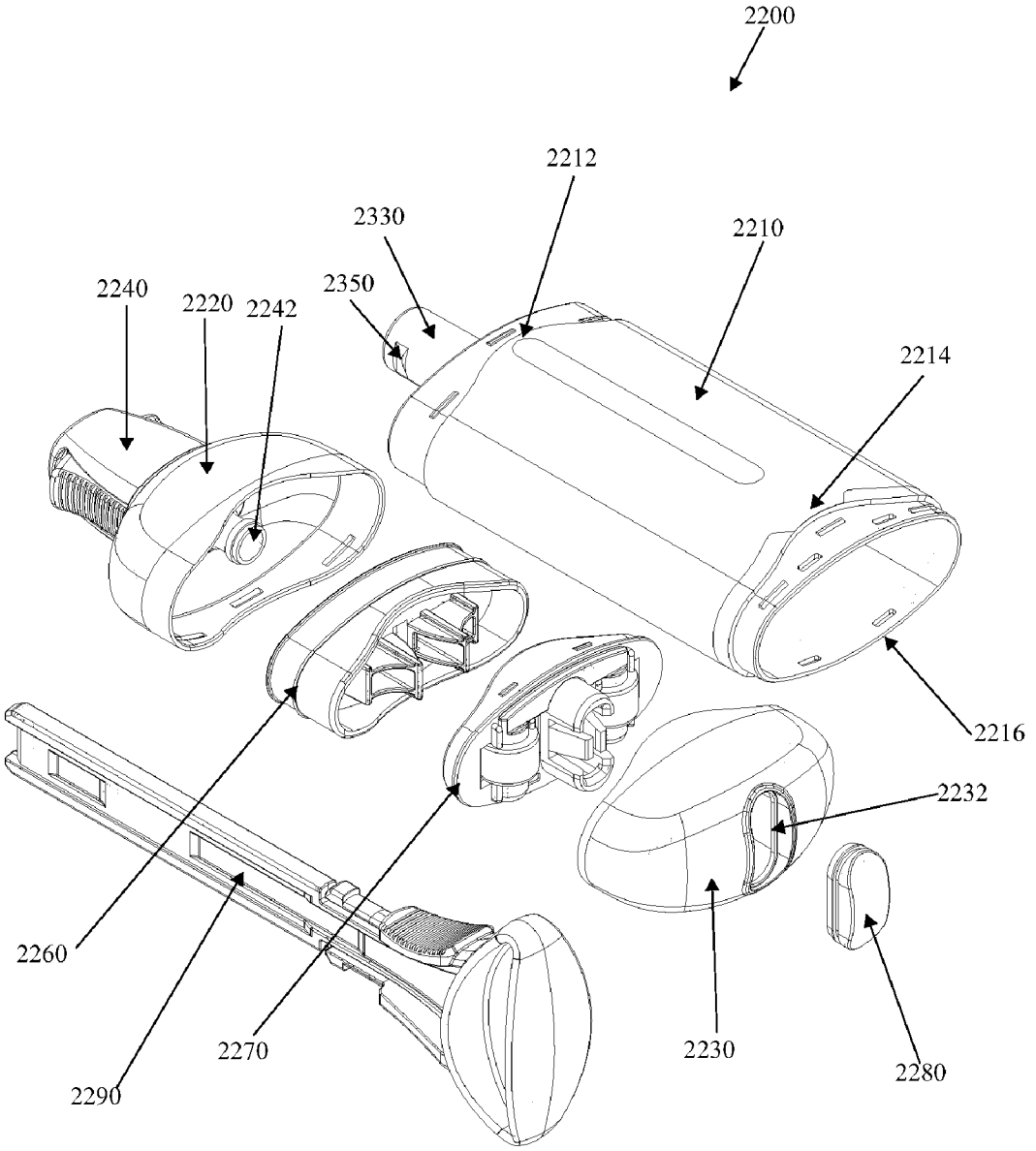
2200
2212
2330
2210
2350
2240
2220
2242
2214
2216
2232
2260
2270
2230
2280
2290

FIG. 23A

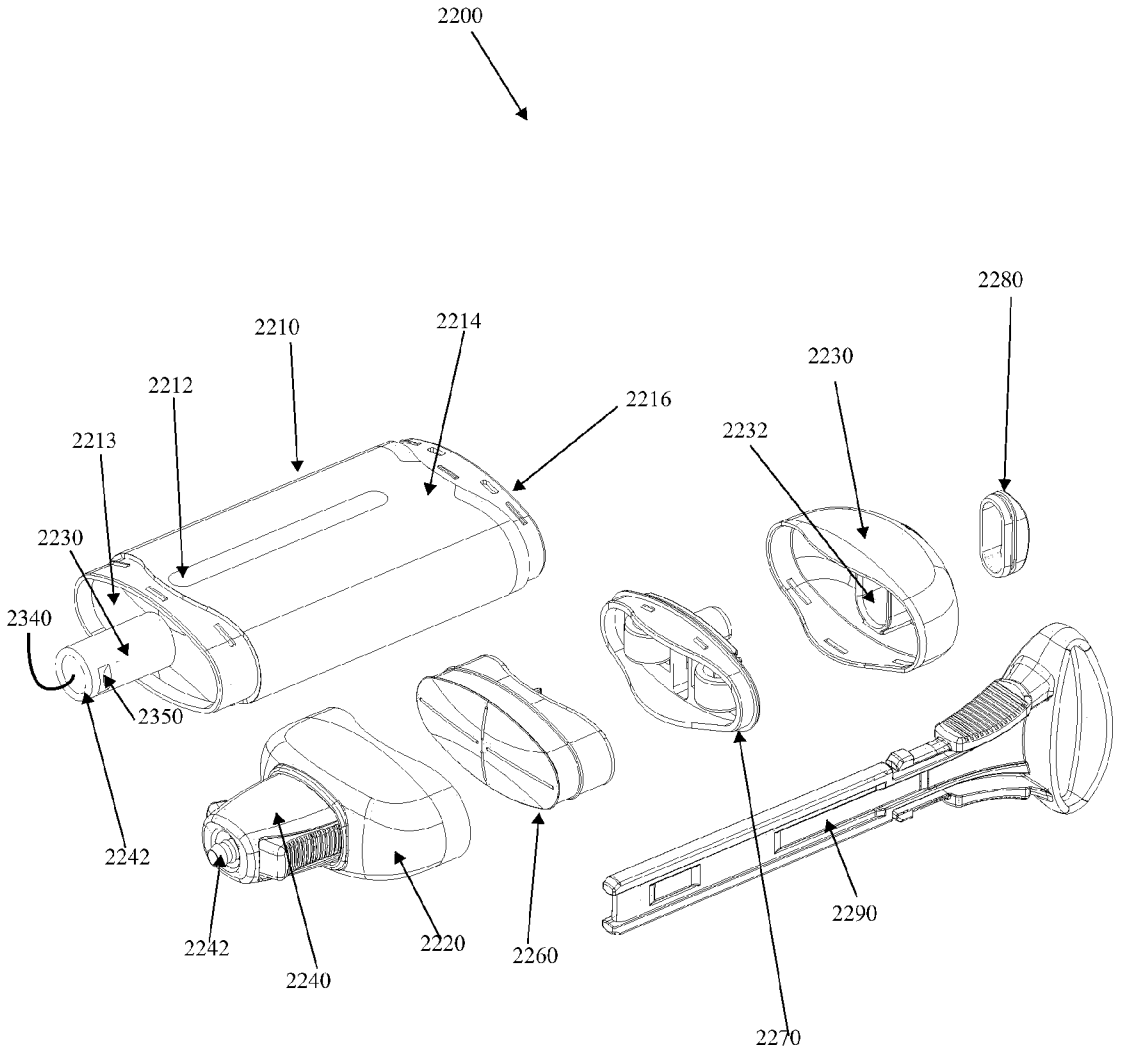
2200
2280
2210
2214
2230
2212
2216
2232
2213
2230
2340
2350
2242
2242
2240
2220
2260
2290
2270

FIG. 23B

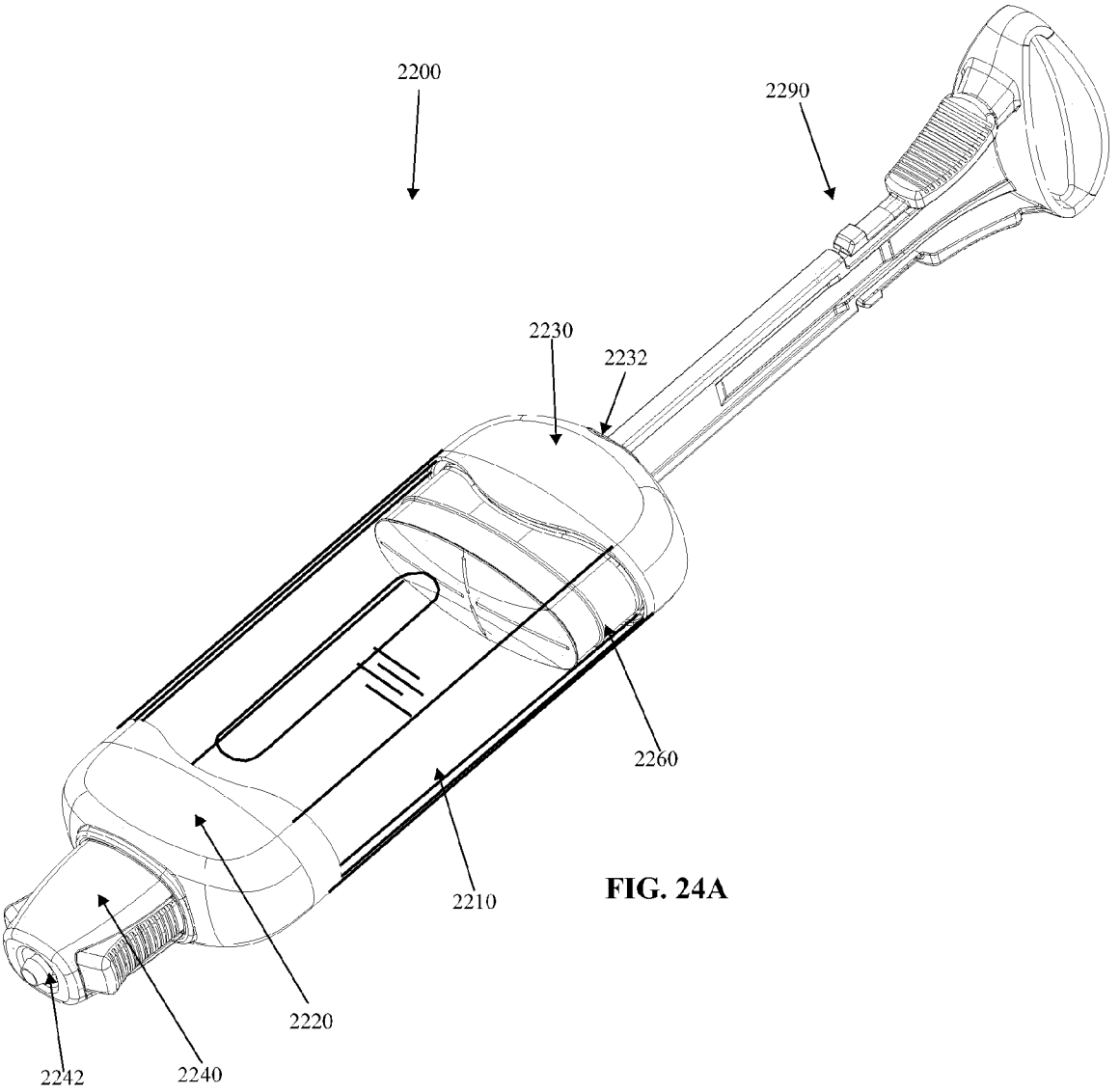

FIG. 24A

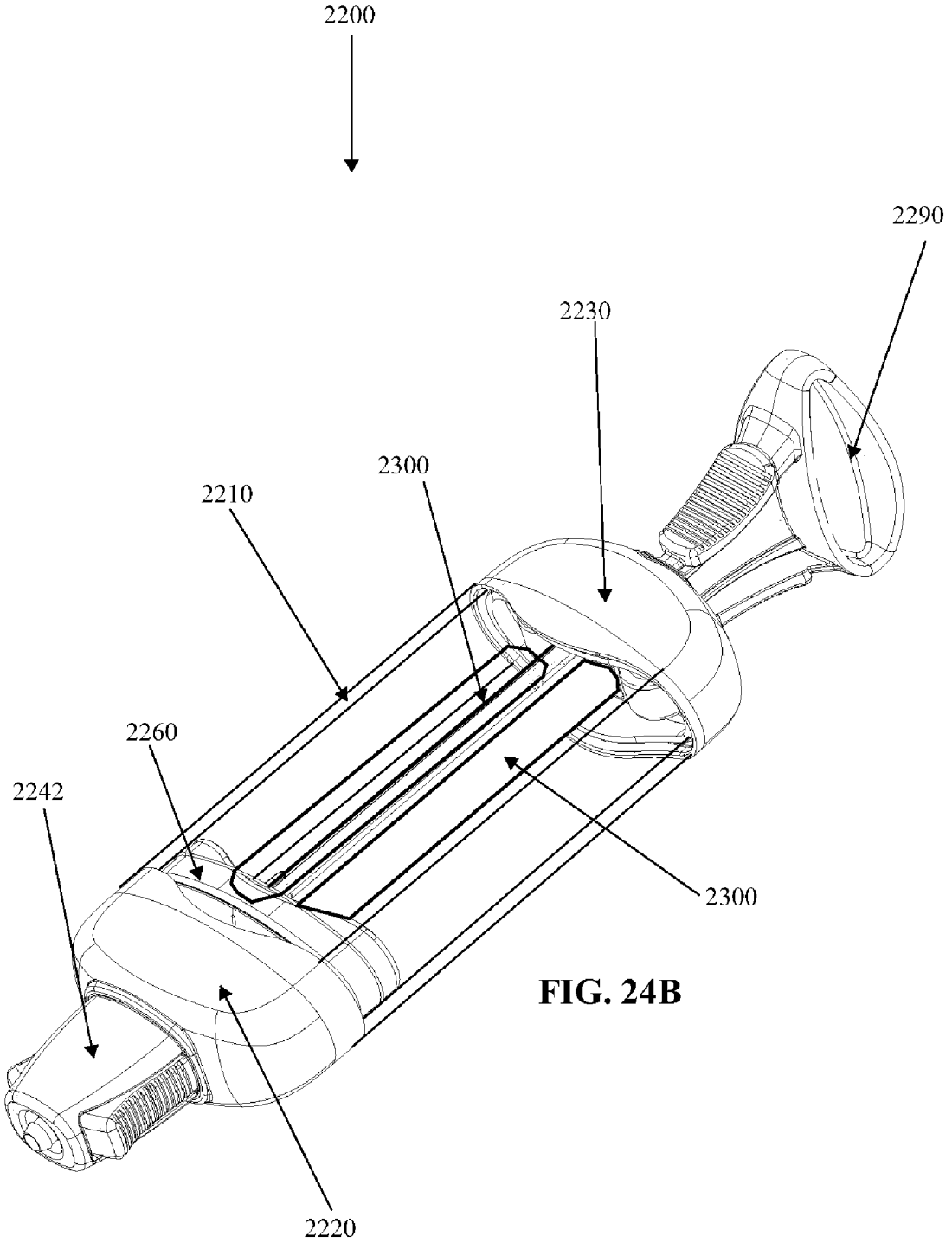

FIG. 24B

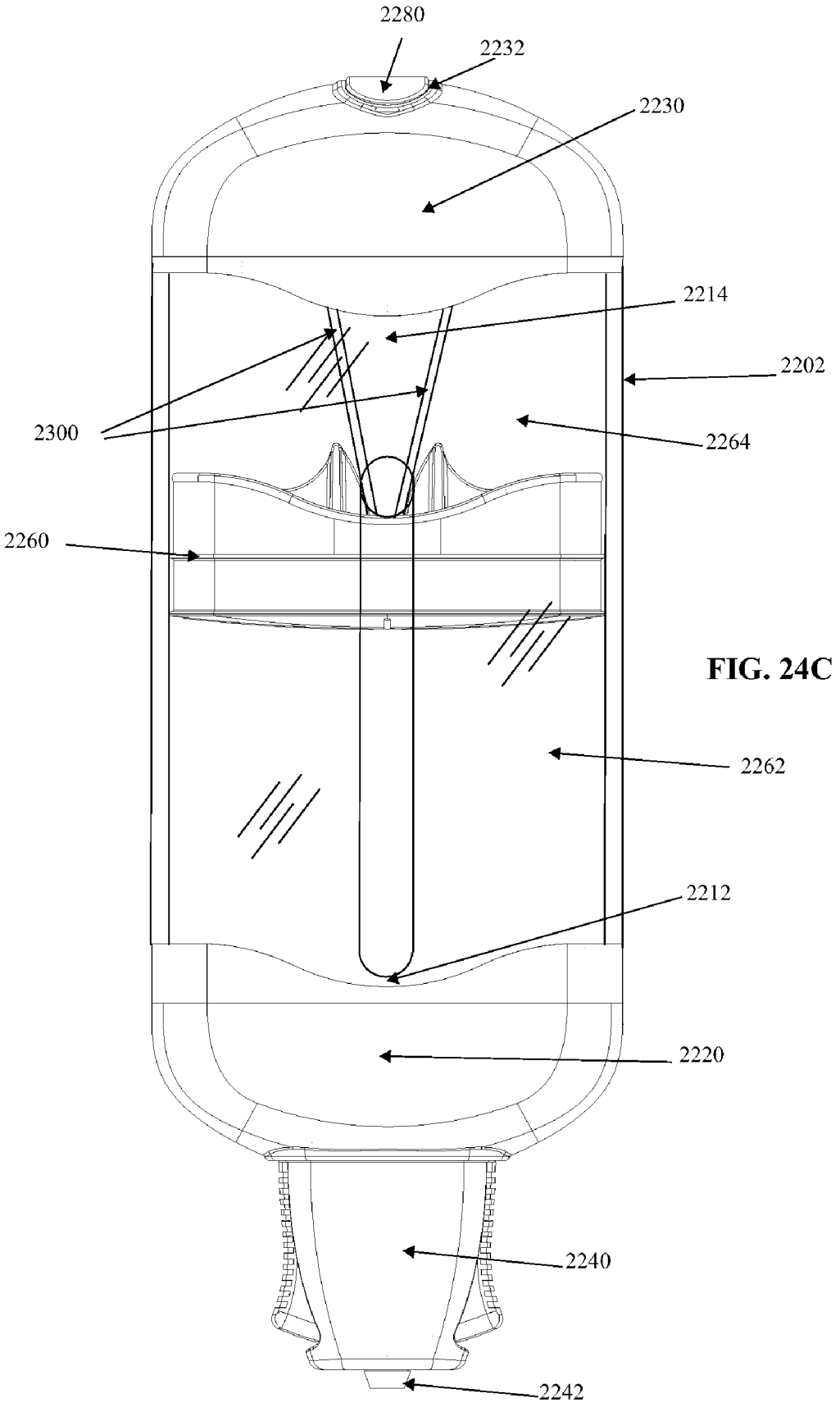
2280
2232
2230
2214
2202
2300
2264
2260
2262
2212
2220
2240
2242

FIG. 24C

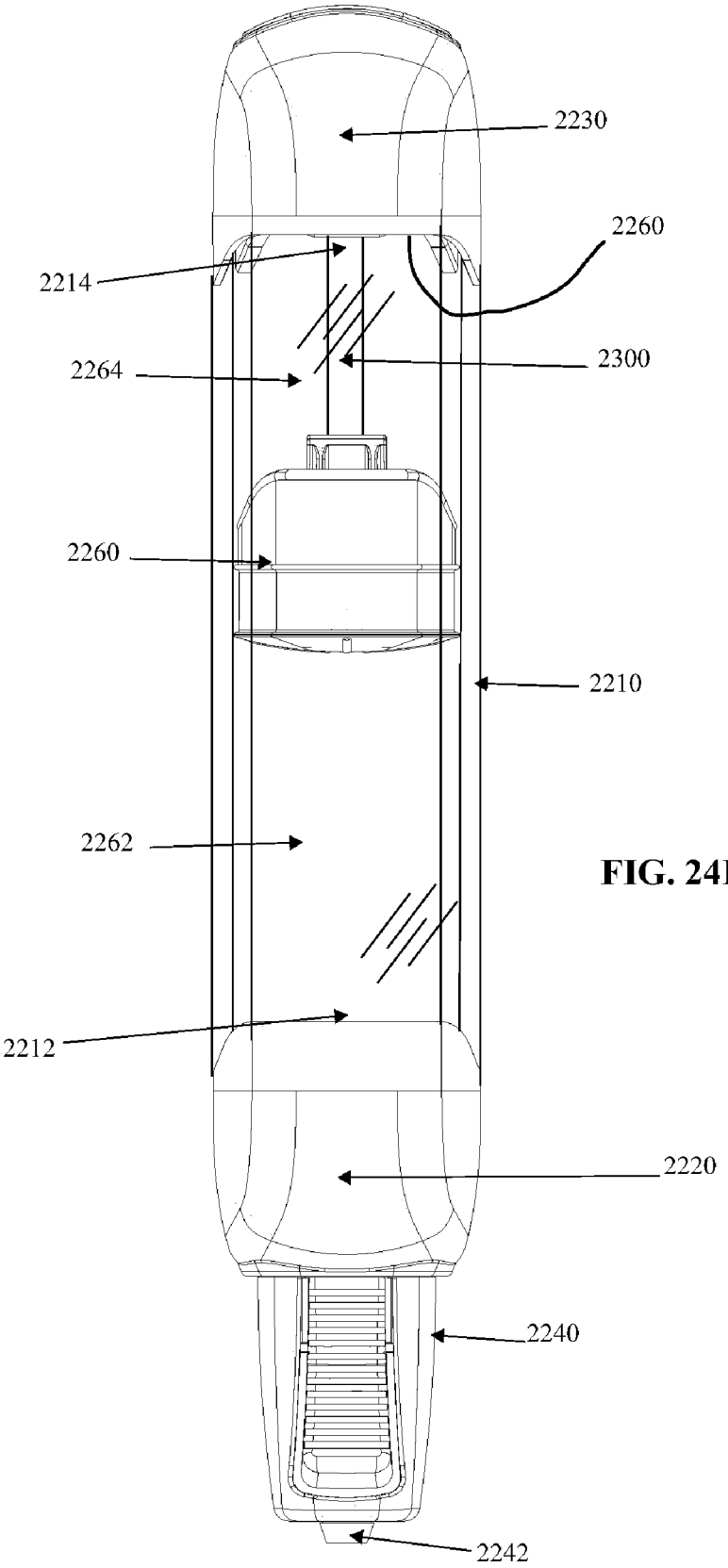

FIG. 24D

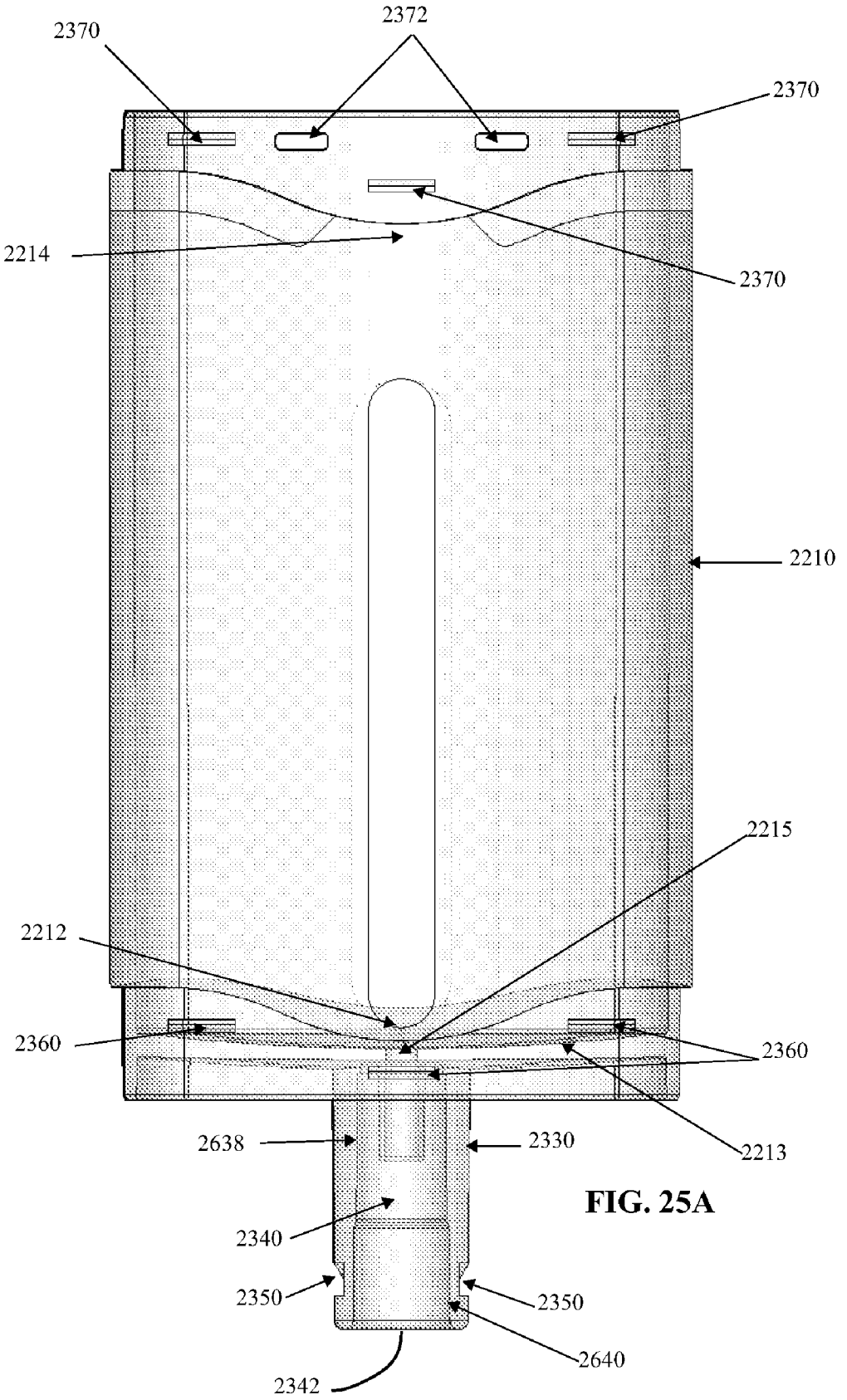
2370
2372
2370
2214
2370
2210
2215
2212
2360
2360
2638
2330
2213
2340
2350
2350
2640
2342

FIG. 25A

FIG. 25B

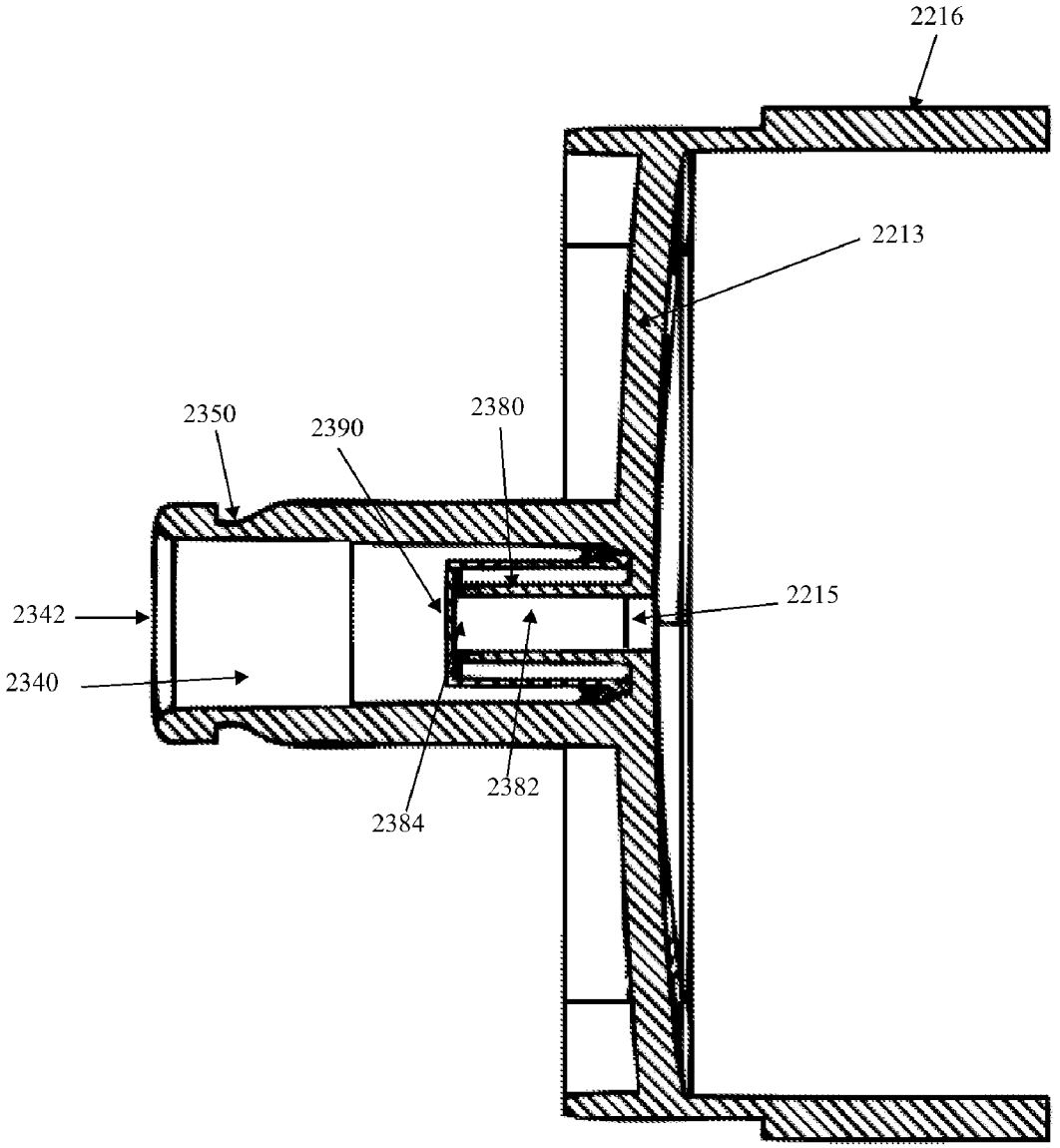

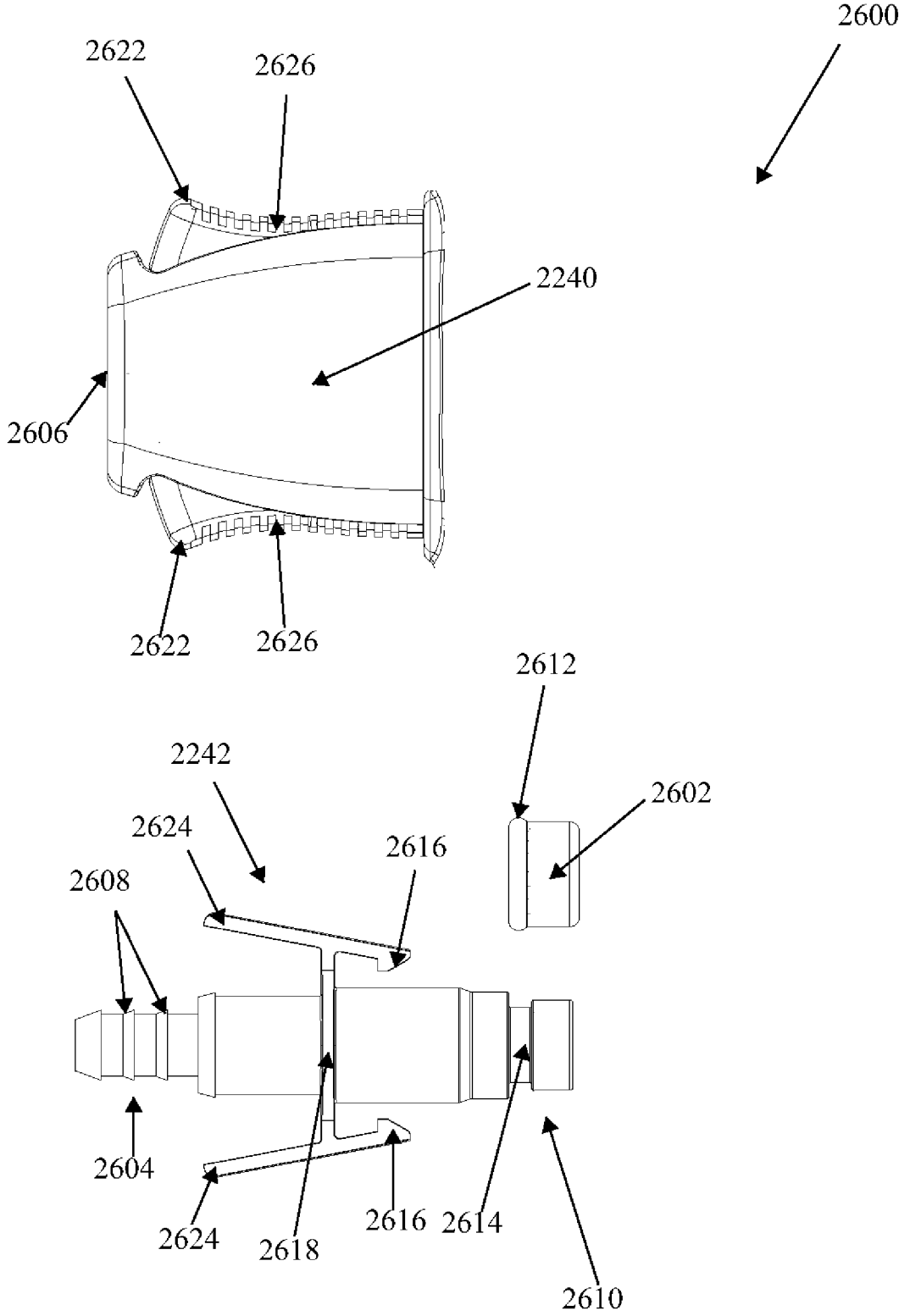
2600
2622
2626
2240
2606
2622
2626
2612
2242
2602
2624
2616
2608
2604
2624
2618
2616
2614
2610

FIG. 26A

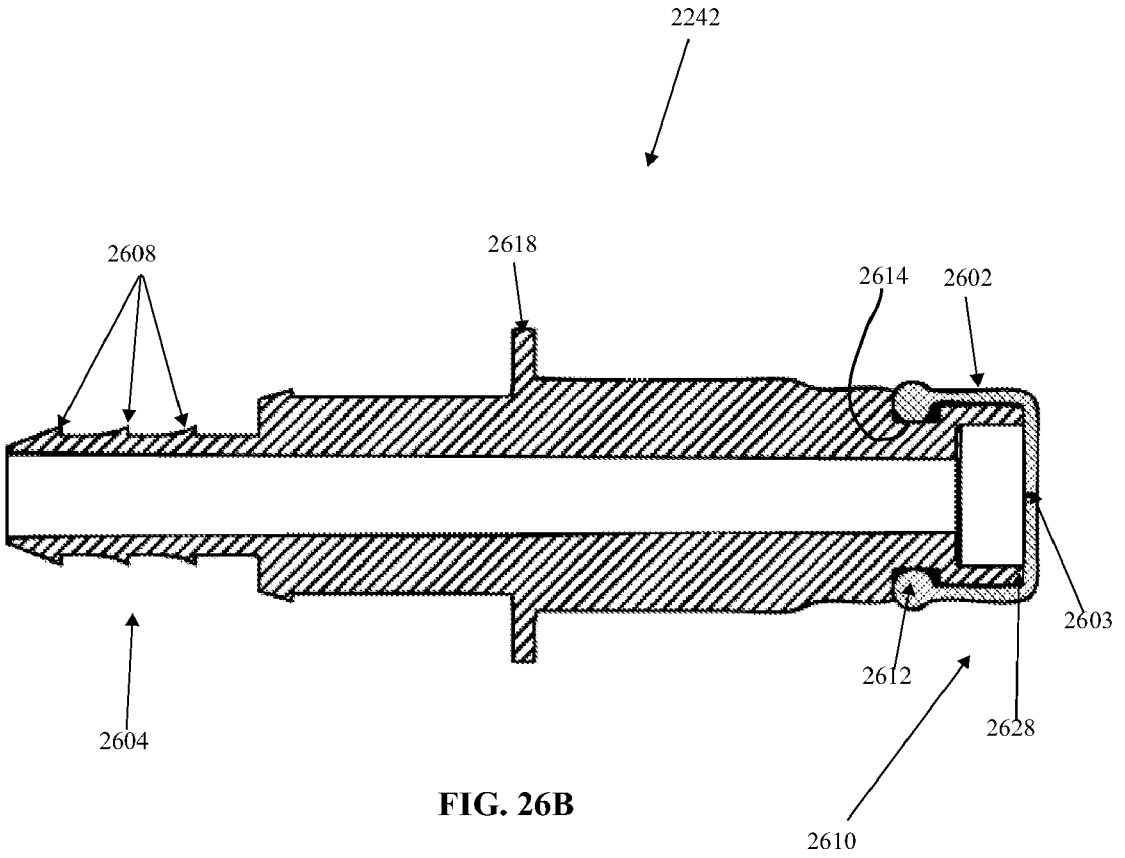

FIG. 26B

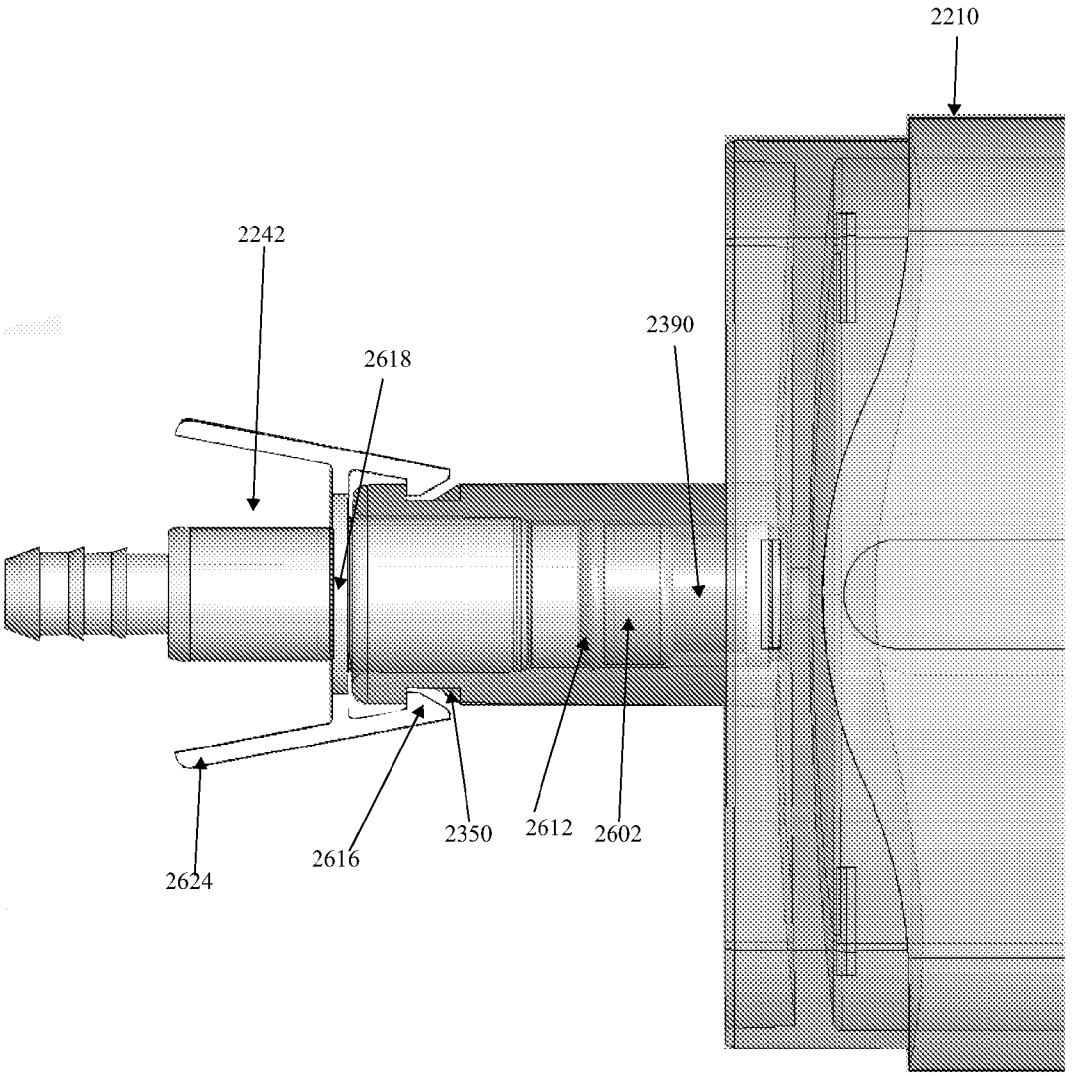

FIG. 27A

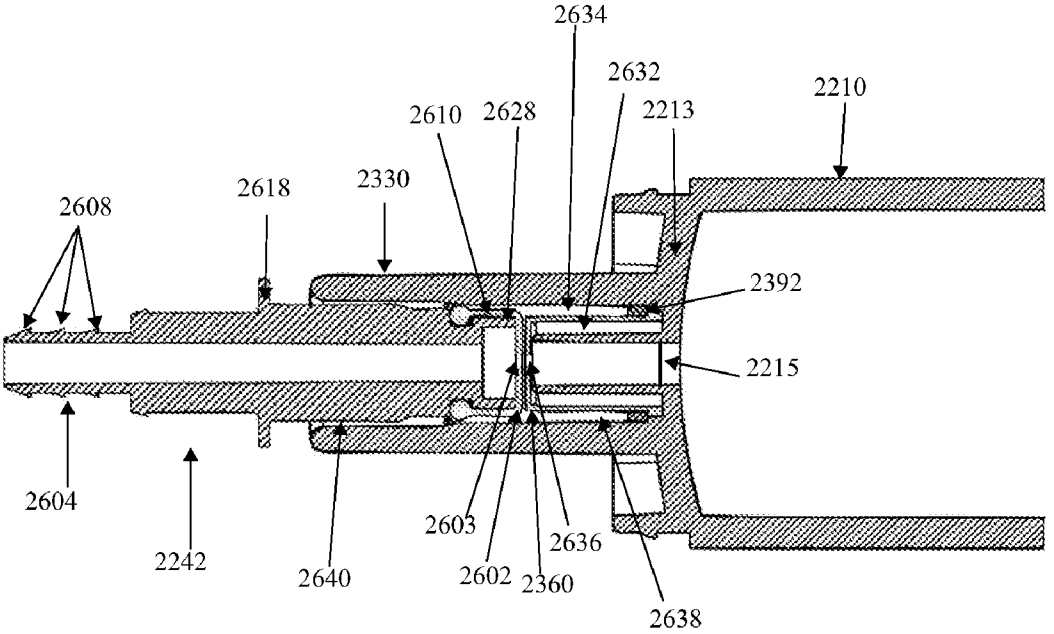

FIG. 27B

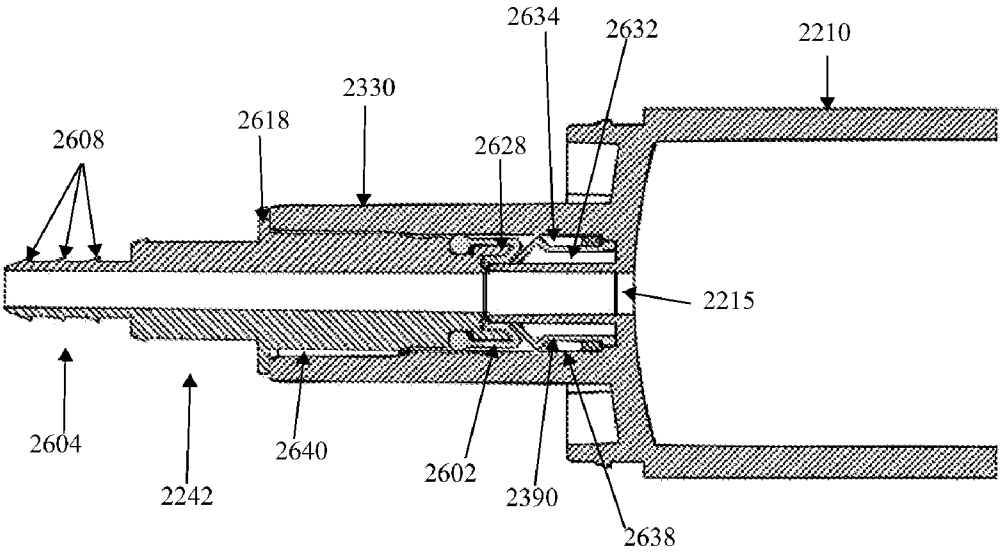

FIG. 27C

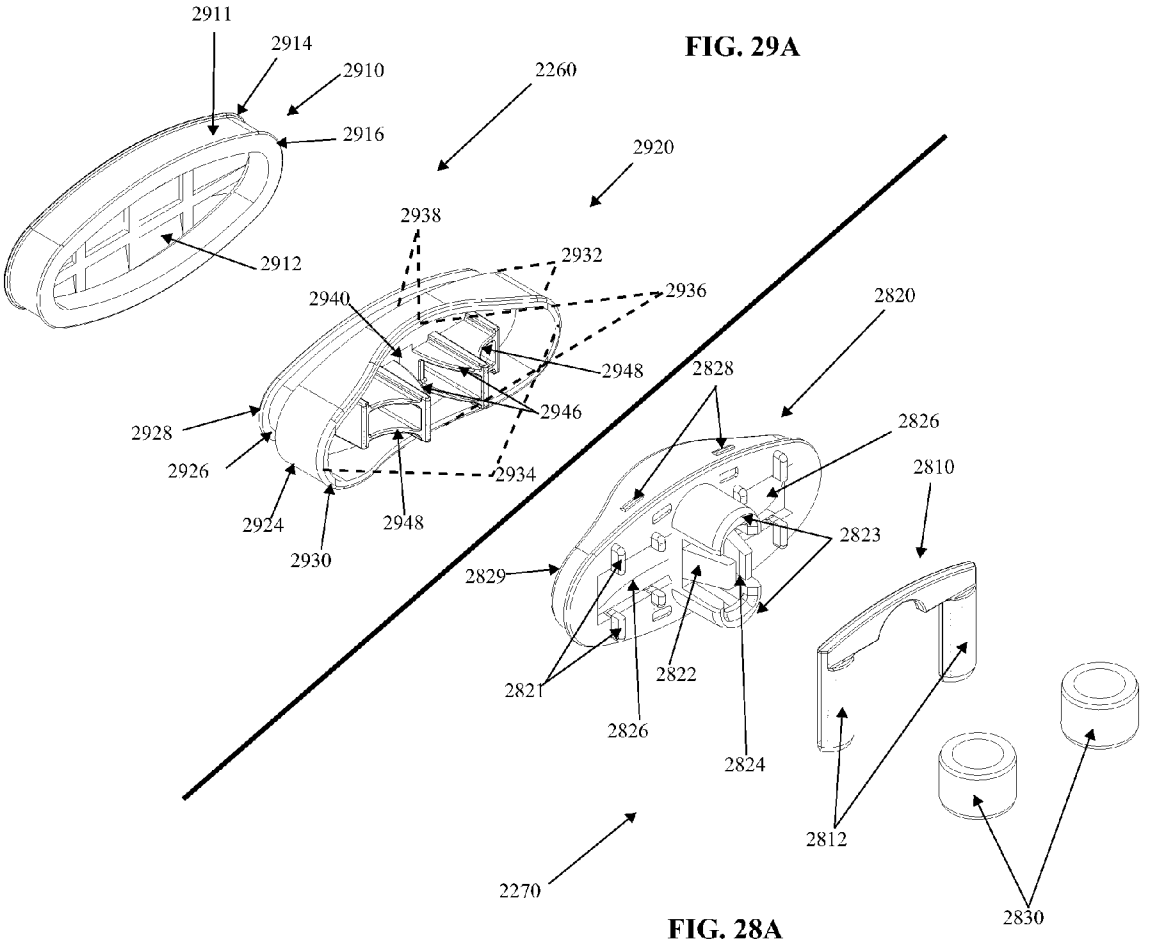

FIG. 29A

FIG. 28A

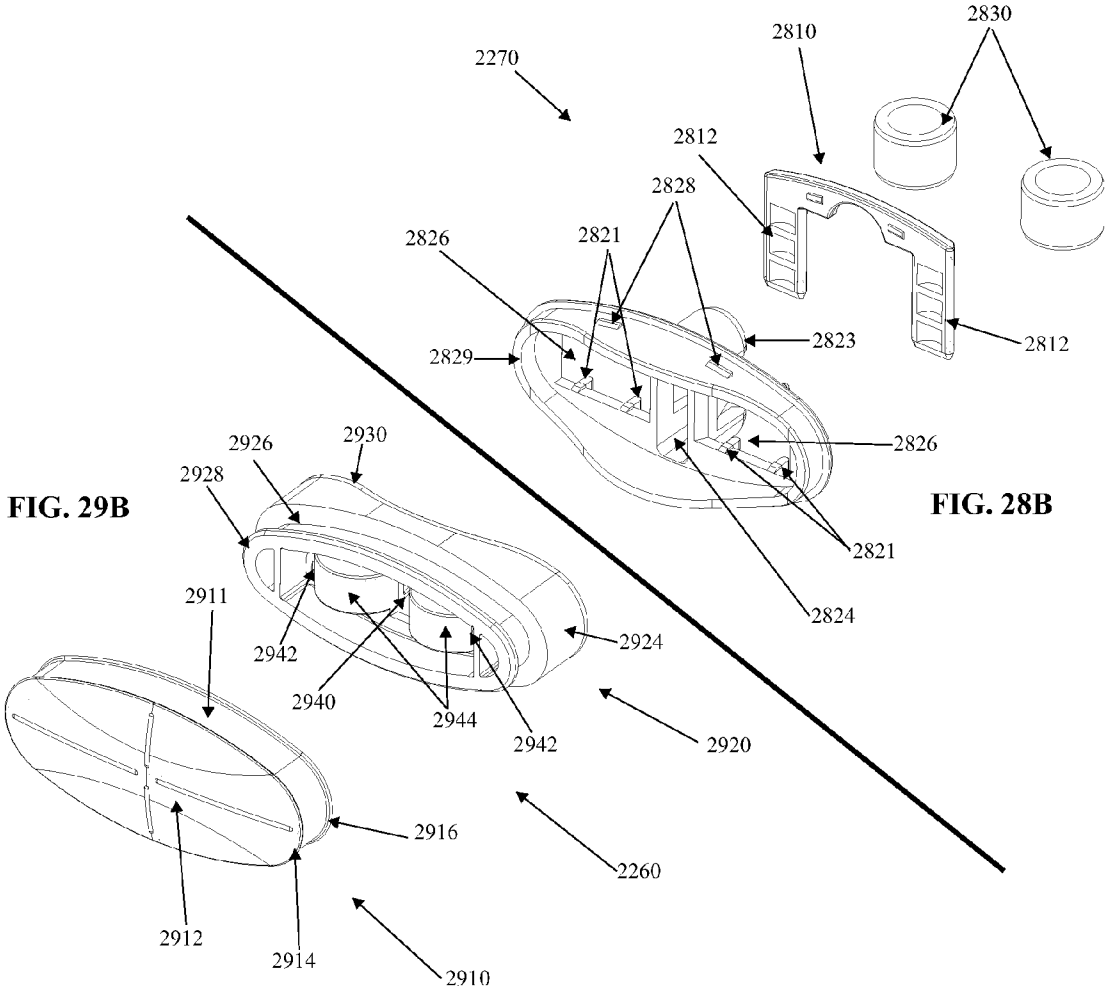

FIG. 29B

FIG. 28B

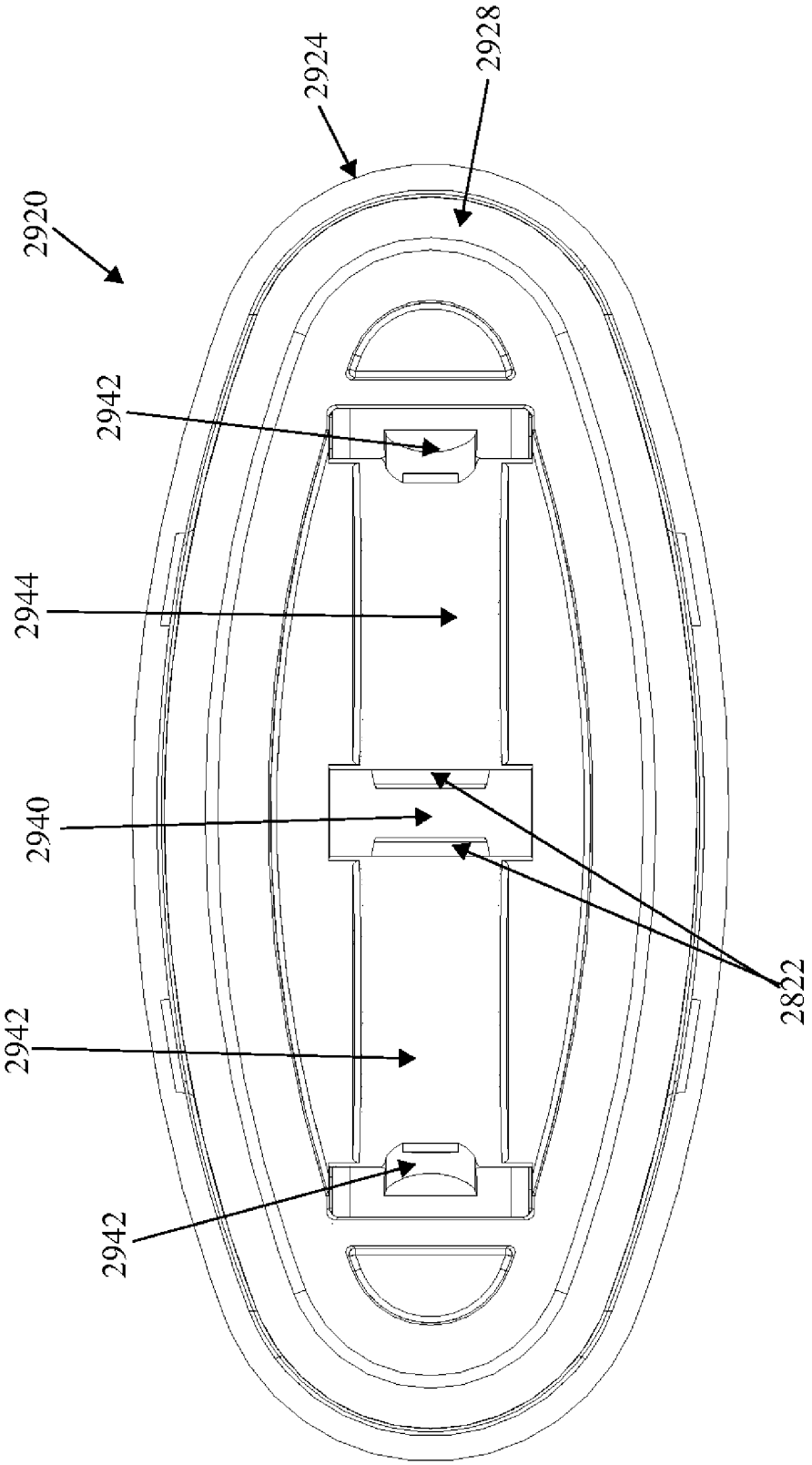

FIG. 29C

FIG. 30

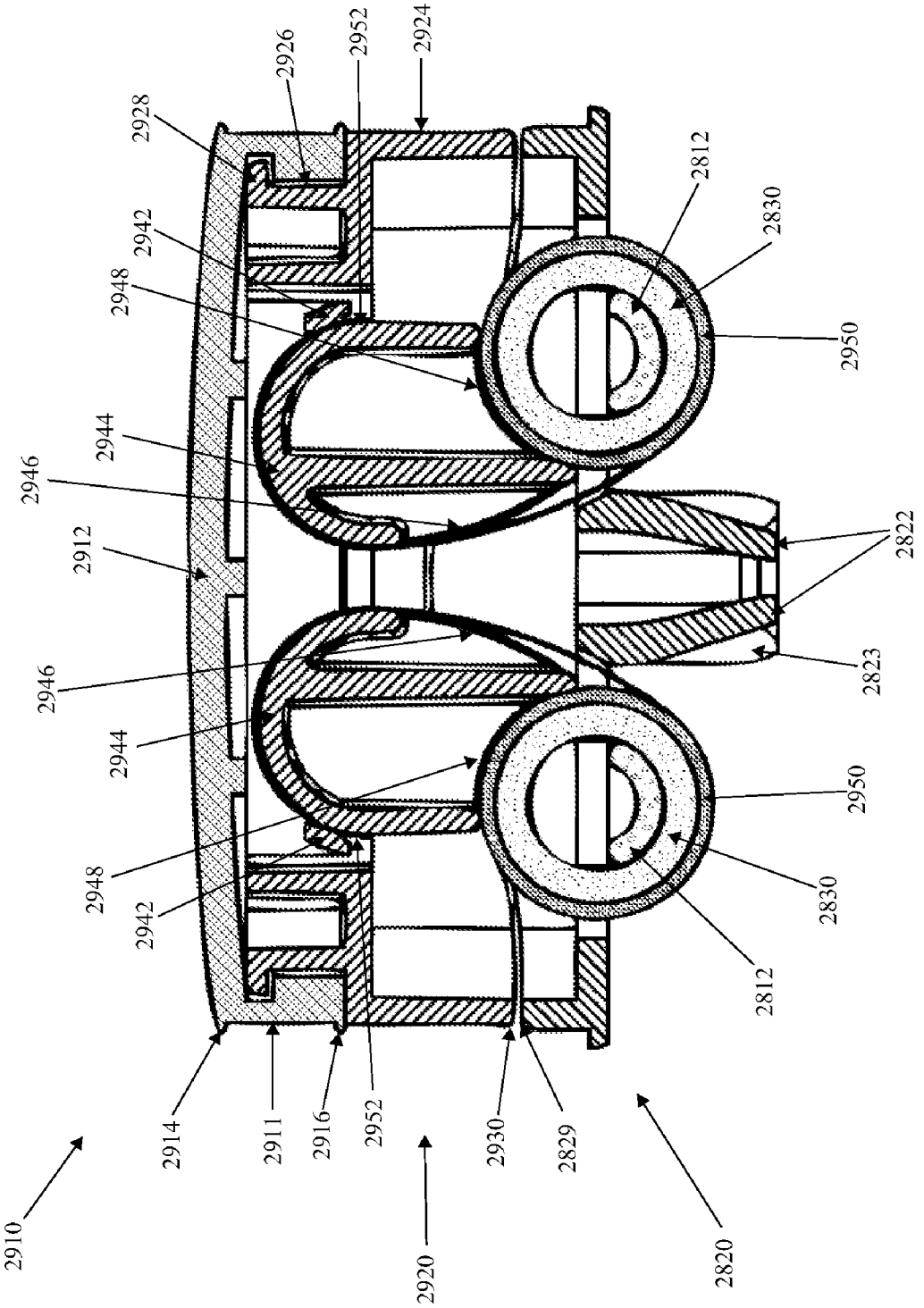
2910
2914
2911
2916
2952
2920
2930
2829
2820
2948
2942
2946
2944
2912
2946
2944
2948
2942
2928
2926
2952
2924
2812
2830
2950
2822
2823
2950
2830
2812

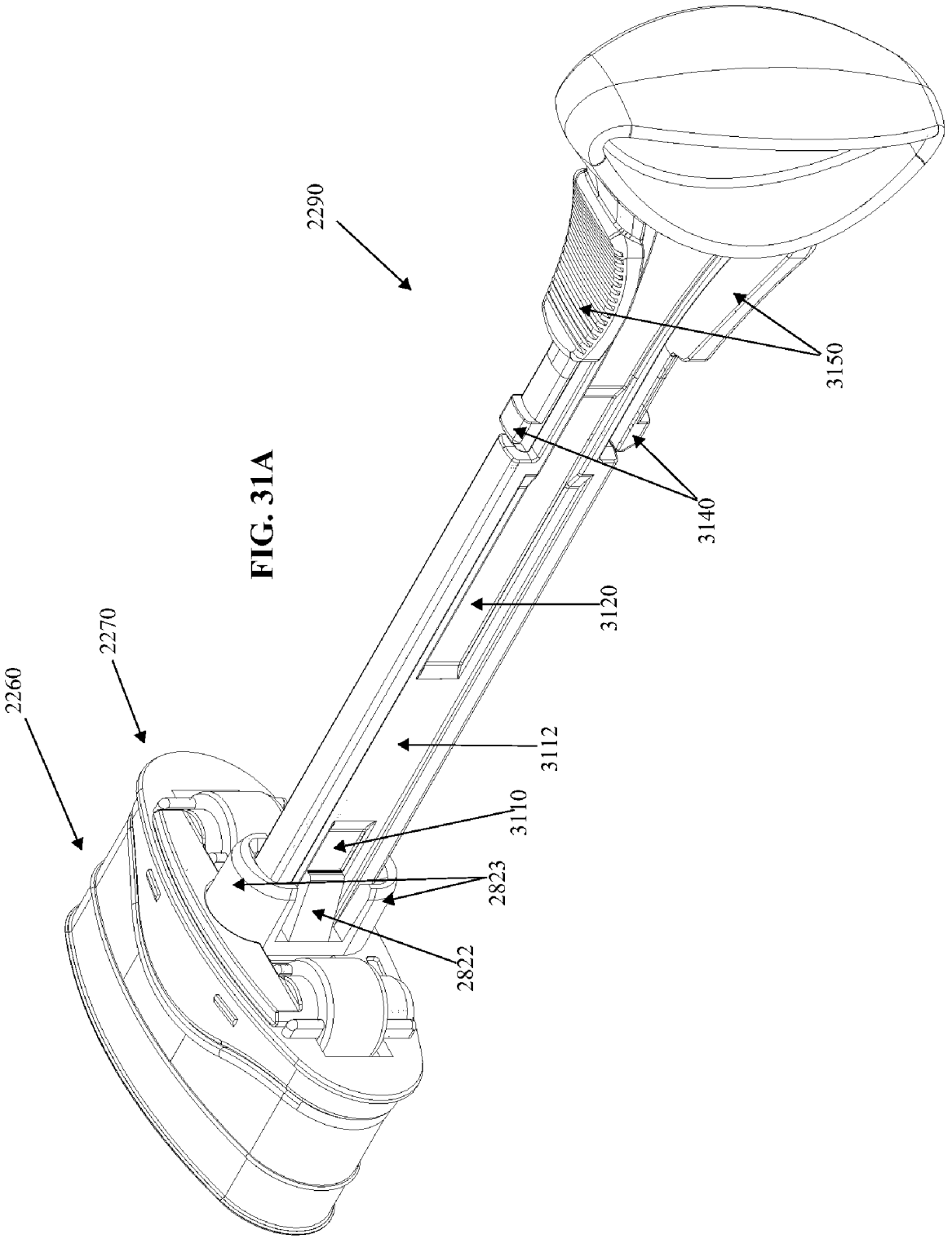

FIG. 31A

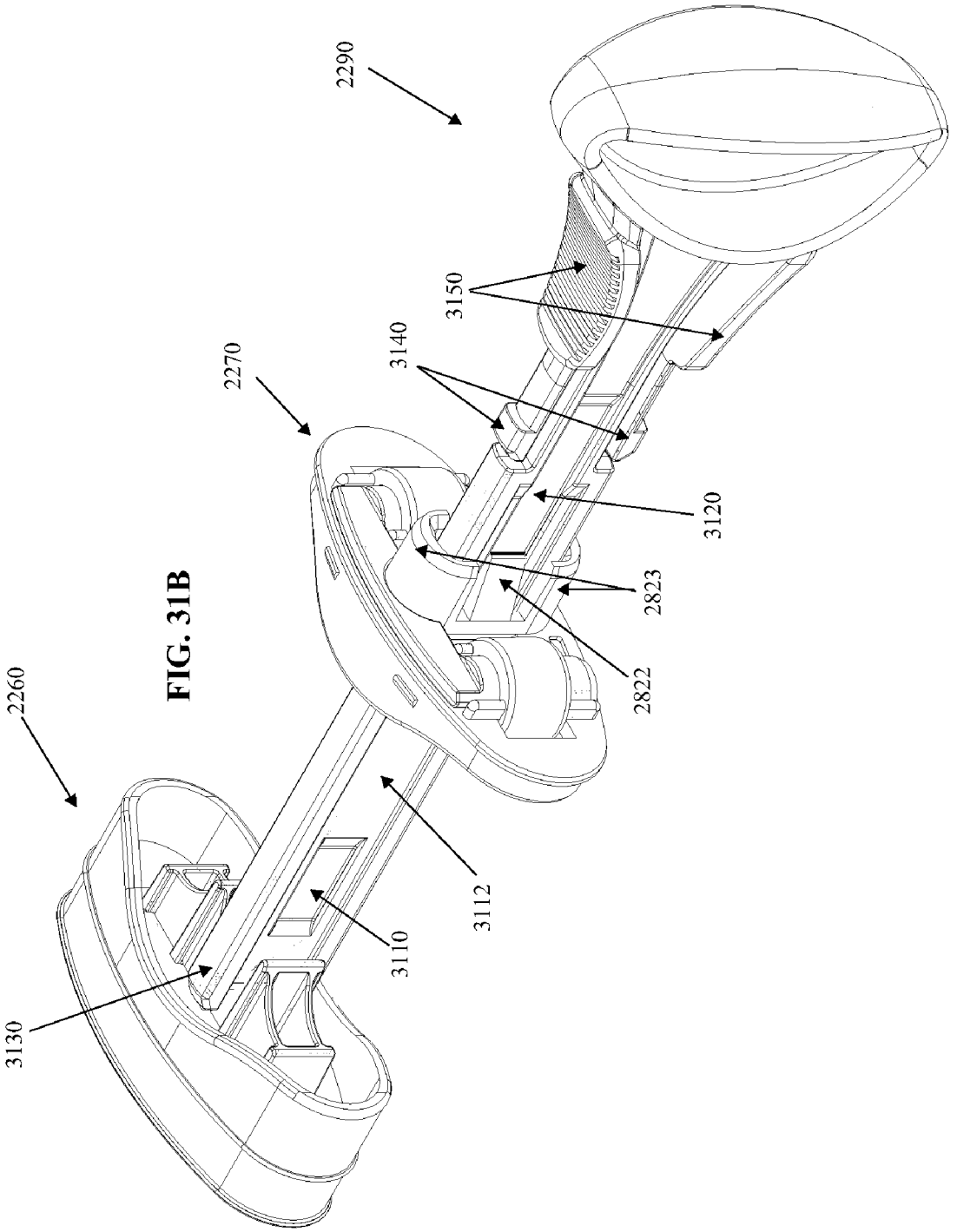

FIG. 31B

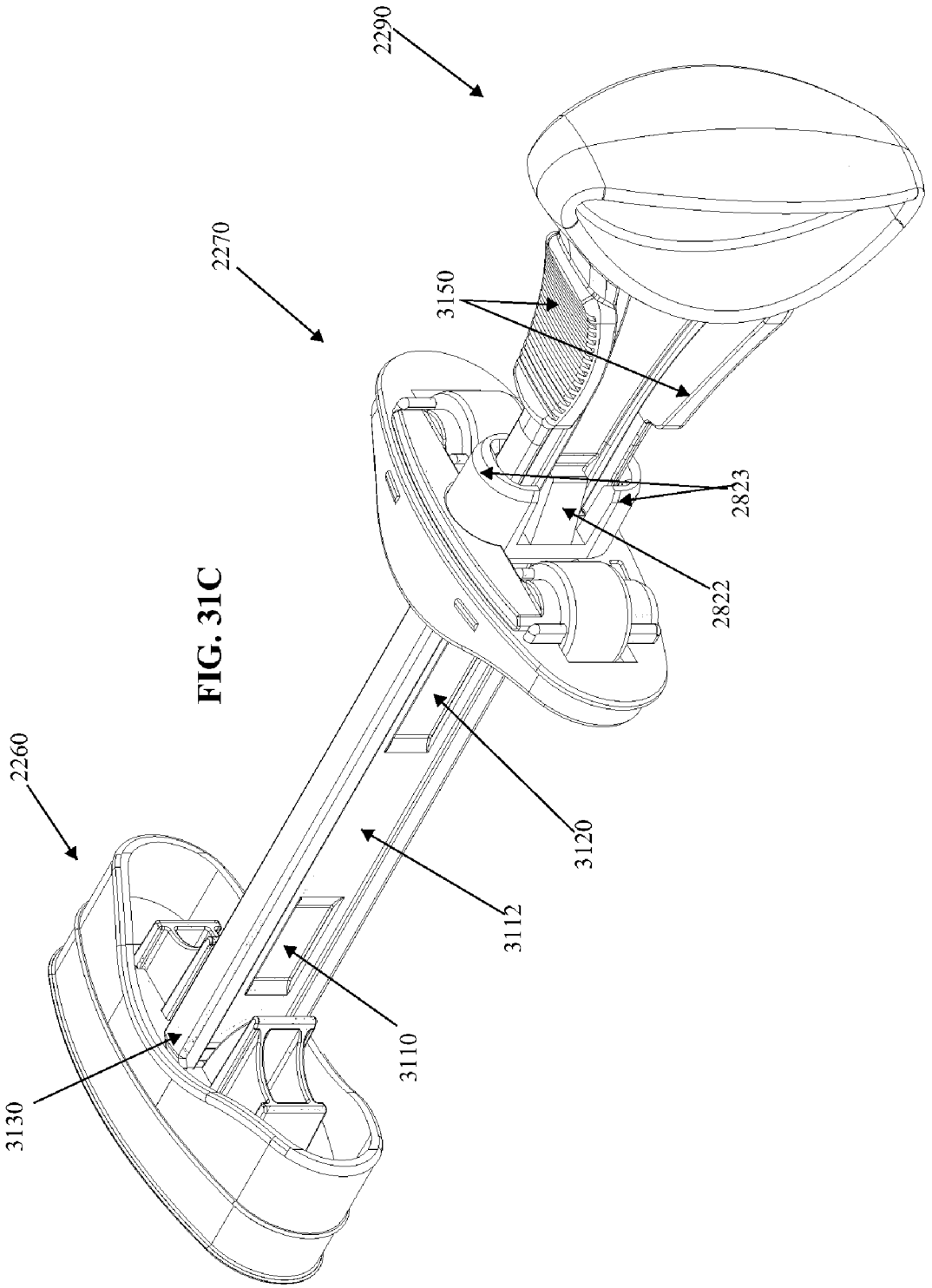

FIG. 31C

DEVICES AND METHODS FOR TREATMENT OF DAMAGED TISSUE

CROSS-REFERENCE TO RELATED APPLICATIONS

[0001] This application claims the benefit of priority to U.S. Provisional Patent Application Ser. No. 61/028,835, entitled "Devices and Methods for Treatment of Damaged Tissue," filed on Feb. 14, 2008, which is hereby incorporated by reference herein in its entirety.

BACKGROUND

[0002] The use of sub-atmospheric pressure to treat wounds can be traced back to ancient civilizations. For example, the ancient Chinese used "Cupping," a technique that creates reduced pressure environment by flaming a glass chamber to draw out bad humors from the body. Modern research has revealed that applying reduced pressure to a damaged tissue may have several beneficial effects: 1) a reduced pressure level may lead to retraction of the damaged tissue edges and thus may reduce the defect size and may expedite healing by facilitating wound contraction; 2) the reduced pressure may provide mechanical stimulation to the damaged tissue which may release growth factors at the wound bed to promote healing; 3) the reduced pressure may create suction in the damaged tissue cavity which may remove necrotic tissue from the damaged tissue cavity and may reduce bacterial load; 4) the application of reduced pressure may increase blood flow to the damaged tissue and, which may expedite healing; and 5) reduced pressure may remove granulation inhibiting metalloproteinase enzymes, which may enhance tissue remodeling and healing.

[0003] In light of the many benefits of reduced pressure tissue therapy, reduced-pressure wound treatment systems and methods are desirable.

BRIEF SUMMARY

[0004] Methods and devices for treatment of damaged tissue are disclosed, including treatment of wounds by employing non-electrically powered reduced pressure therapy devices. Maintenance and control of the sub-atmospheric pressure generated may be provided by such devices while minimizing usage discomfort to the user. In some embodiments, the reduced pressure therapy device comprises a suction apparatus, a sealant layer, a contact matrix and optional extension tubing. The suction apparatus may be a non-electrically powered device, which may be configured to be silent and/or wearable. In some embodiments, the suction apparatus may have a low-profile so that it may be worn inconspicuously under clothing. The sealant layer may create a substantially airtight enclosure over the damaged tissue to provide fluid communication between the suction apparatus and the enclosure containing the damaged tissue. Fluid communication may be provided by a direct connection between the suction apparatus and the sealant layer, or may be provided through extension tubing connecting the suction apparatus and the attachment port. In some embodiments, the sealant layer may be flexible, but in other embodiments the sealant layer may be semi-rigid or rigid. In some examples, a semi-rigid or rigid sealant layer may facilitate handling or application of the sealant layer to a treatment site while reducing or eliminating the risk that the sealant layer may fold and adhere on itself. The extension tubing may be coupled to the sealant layer and/or suction apparatus using a connector or fitting. The connector may optionally comprise a releasable locking mechanism to facilitate attachment and detachment of the extension tubing, and/or to prevent accidental disconnection. For example, the releasable locking mechanism may comprise a release button or other actuator which serves as a locking mechanism which may be manipulated during attachment and/or detachment of the tubing. In other embodiments, the suction apparatus may be connected directly to the sealant layer attachment port, and may comprise a connector with the same or similar connector as the extension tubing, to permit both direct attachment of the suction apparatus and remote attachment using the tubing.

[0005] In some embodiments the therapy device comprises a variable volume chamber configured to generate reduced pressure and to collect any aspirated fluid or materials. The chamber may be actuated using constant force springs which are coupled to a movable portion of the variable volume chamber. By expanding or biasing the variable volume chamber to an increased volume, the volume of air enclosed by the variable volume chamber and the enclosure sealed by the containing the damaged tissue may be expanded, thereby reducing the pressure of the air.

[0006] In some embodiments, the reduced pressure therapy device comprises a non-circular suction chamber design which may provide the therapy device with a low or reduced profile. In some examples, the low profile permits placement of the reduced pressure system on the body near the wound, with or without the use of extension tubing. This ergonomic chamber design coupled with the integrated system configuration may permit discrete wearing of the devices to enhance life quality. In one particular example, the suction apparatus comprises a variable volume chamber with an oval cross-sectional geometry that provides a substantial exudate handling capacity while also providing a low profile. This permits improved mobility, discretion, flexibility, and/or comfort during treatment. The low-profile geometry may also streamline the workflow of using the reduced pressure therapy system by locating the suction apparatus at or adjacent to the treatment site, rather than a remote site, and may also eliminate the use of extension tubing to maintain fluid communication between a treatment site and a separate suction apparatus.

[0007] The sealant layer may also comprise an attachment port to facilitate attachment and/or detachment of the suction apparatus or extension tubing to the sealant layer. In some examples, the attachment port may have a variety of relative configurations and/or relative positions with respect to the sealant layer and the suction apparatus. In some instances, the attachment port may be articulated and/or flexible. For example, an attachment port may be configured with a swivel base, which may permit the attachment port to rotate. An articulated and/or flexible attachment port may also reduce the transmission of torsion or other forces that may be transmitted between the suction apparatus and the sealant layer. The attachment port may be integrally formed with sealant layer at the point of manufacture, or may be provided separately and attached to the sealant layer at the point of use. The latter embodiments may permit clinician flexibility or customization of the relative location of the attachment port with respect to the sealant layer. The attachment port configuration may also provide improved patient comfort as the attachment port design minimizes communication of torsion forces to the wound bed, which may be caused by the suction apparatus movements, while allowing quick integration. Furthermore,

ability to bend and/or rotate allows independent placement of the sealant layer with respect to the attachment port orientation. The flexibility of the attachment port may also reduce the risk of pressure point induced injury. The attachment port may allow for simple snap-in attachment of the vacuum source. The connection of the attachment port nozzle to the dressing interface may have a small footprint and/or a low profile to reduce the possibility of pressure point injury. In some embodiments, the swivel base of the attachment port may have a thin elastomeric base which is integrated into the sealant layer. The swivel base is configured to allow maximal sealant layer moldability while maintaining integration with the more rigid system elements to form a seal around body surfaces. In some embodiments, a reduced pressure therapy device with an attachment port may reduce or eliminate one or more steps that are used to attach the reduced pressure source to the sealant layer and to create fluid communication between the wound and reduced pressure source. Unlike existing reduced pressure therapy systems, the attachment port may be configured to attach the vacuum source without adhesives and/or without cutting the sealant layer.

[0008] In some embodiments, the reduced pressure therapy device may be configured with one or more actuators to facilitate activation of the suction apparatus and/or release of the suction apparatus from the skin or tissue. For example, the suction apparatus may comprise an activation mechanism. In some embodiments, the suction apparatus contains a button or other actuator which initiates the application of reduced pressure at the treatment site. The activation mechanism may be provide with indicia, such as the word "ACTIVATE" or a color green, or any other word or coding with similar meaning, is provided thereon or nearby. Pressing the said button may open a valve and allow fluid communication between the enclosure formed adjacent to the wound bed and the suction chamber, or may unlock a sliding seal to permit movement. More specifically, the activation may cause constant force springs to retract in order to expand the combined volume of the space below the sliding seal and within the wound enclosure. The reduced pressure created therein may exert a force on the sliding seal substantially equal to that of the springs.

[0009] In some embodiments, the reduced pressure therapy device may further comprise an additional button or actuator which is configured to close the valve and/or decouple the suction apparatus from the extension tubing or sealant layer enclosing the wound. Pressing the additional button may allow detachment of the suction apparatus from the attachment port or the extension tubing and activate a one way valve which traps the exudates within the suction chamber or otherwise closes any pathway out of the suction chamber.

[0010] In some embodiments, the therapy device may be primed or charged prior to applying the reduced pressure. In some configurations of the device, the charging and activating method may be performed in a single continuous step. While in other configurations, the charging and the activating method may be performed in distinctly separate steps. In one example, the sliding seal within the suction apparatus may be primed by being positioned at the distal end of the suction apparatus. The positioning of the sliding seal may be performed by any of a variety of priming mechanisms, such as a slider or push rod, for example. In some embodiments, the sliding seal may automatically begin to slide back to generate a pressure differential in the reduced pressure chamber after priming. In other embodiments, the suction apparatus may comprise an activating mechanism which is actuated separately from a priming mechanism to initiate the generation of the pressure differential. In some configurations, the activating mechanism may directly block or restrict movement of the sliding seal, while in other configurations, the activating mechanism may restrict or limit flow of fluid and/or materials into the chamber of the suction apparatus. In one example, the release mechanism may comprise a separate button or lever that is configured to alter communication or flow through a valve coupled to the reduced pressure chamber. The valve may be a blade valve or rotatable valve, for example. Pressing the activation button may lift a blade valve or turn the lever of a rotatable valve to permit fluid flow into the reduced pressure chamber.

[0011] In certain embodiments, the priming mechanism comprises a priming key or tool configured extend the force mechanism or displace the sliding seal into its primed position. In some examples, the priming tool comprises an elongate rigid member that is configured to be positioned in an opening in the body of the suction apparatus and may be used as a lever or push rod to prime the reduced pressure generation mechanism. In some embodiments, the priming tool can be used to mechanically press the sliding seal towards the distal end of the suction apparatus until a latch, embedded within the shaft of the priming tool, locks into place. In some embodiments the priming tool is integrated into the body of the suction apparatus and may also serve as a cap to close the suction apparatus. In some embodiments, the priming tool may be configured to hold and maintain the suction apparatus in a non-charged state. For example, the priming tool may be releasably locked to the body of the suction apparatus to provide safe storage of noncharged suction apparatus, with the locked priming tool preventing or limiting a non-charged spring mechanism from retracting during storage and/or handling. In some instances, without the priming tool in place, retraction from storage and/or handling may occur, due to micro-leaks out of the suction chamber that may cause the springs to lose the energy stored in them, for example. In other embodiments, the priming tool enables re-charging of the spring or other force mechanism that has been depleted or otherwise lost some charge. For example, recharging may be performed when accidental discharge or an undetected leak causes the springs to lose the energy stored in them, or after emptying the collection chamber.

[0012] Provided here is a tissue therapy device for treating a damaged tissue. In one embodiment, the device comprises a sealable wound covering and a reduced pressure generating device. In some embodiments, the reduced pressure generating device may be wearable and configured to substantially maintain its external dimensions over a range of collection volumes. In addition, the reduced pressure generating device may have a non-circular cross-sectional shape. In some embodiments, the reduced pressure generating device may be non-electrically powered. In such an embodiment, the reduced pressure generating device may further comprise an elastic force member. For example, the force member may be a constant force spring. In an embodiment where an elastic force member is used, the reduced pressure generating device may be adapted to be mechanically charged with potential energy. In some embodiments, the reduced pressure generating device may comprise a substantially non-cylindrical shape. In such an embodiment, the device may comprise at least two suction chambers. In some instances, these multiple suction chambers may operate independently. In some embodiments where the reduced pressure generating device

comprises more than one suction chamber, the device may further comprise at least one collection chamber that is separate from the suction chambers.

[0013] Also provided herein is a device for treating a patient. In one embodiment, the device comprises a sealable wound covering and a non-circular reduced pressure generating apparatus. In some embodiments, the sealable wound covering may further comprise a cover and an integrated flexible attachment port, which may be configured to swivel around a swivel axis perpendicular to the cover. In some instances, the attachment port may be configured to permit fluid communication through the sealable wound covering and with the reduced pressure generating apparatus. In some embodiments, the non-circular reduced pressure generating apparatus may further comprise a suction chamber, which may be configured to generate reduced pressure. In addition, the suction chamber may be further configured to self-maintain a constant level of reduced pressure across a volume range. In some embodiments, the reduced pressure generating apparatus may be configured to maintain a constant external configuration over a range of collection chamber volumes. In some embodiments the volume of the suction chamber may be at least 50 cc, but in other embodiments, the volume of the suction chamber may be at least 100 cc. In some further embodiments of the device described herein, the reduced pressure generating apparatus may comprise an elastic force member. In such an embodiment, the reduced pressure generating apparatus may be configured to mechanically recharge the elastic force member. In some embodiments, the reduced pressure generating apparatus may be non-electronically powered.

[0014] Also provided herein is a device for treating a patient. In one embodiment, the device comprises a sealable wound covering and a non-circular reduced pressure generating device. In some embodiments, the sealable wound covering may further comprise an integrated flexible attachment port, which may be configured to provide fluid communication through the wound covering and to seal around a wound to form a wound enclosure. In some embodiments, the attachment port may be configured to swivel substantially parallel to the sealable wound covering. In some embodiments, the non-circular reduced pressure generating device may further comprise an elastic force member and a rigid member configured to charge the elastic force member with potential energy. In such an embodiment, the elastic force member may be a constant force spring. In some embodiments, the reduced pressure generating device may be non-electrically powered. In addition, the reduced pressure generating device may be further configured to maintain a substantially constant pressure level irrespective of the orientation of the reduced pressure generating device with respect to gravity. In some further embodiments, the reduced pressure generating device may be configured to maintain fixed external dimensions irrespective of the suctioned or collected volume in the reduced pressure generating device.

[0015] Further provided herein is a system for treating a patient. In one embodiment, the system provided herein comprises a sealable wound covering and a non-electronically powered reduced pressure generating assembly. In some embodiments, the sealable wound covering may further comprise a sealant layer and a flexible attachment port, which is configured with a lumen that passes through the sealant layer. In some embodiments, the system may further comprise at least one substantially constant force member. In other embodiments, the system may further comprise at least two substantially constant force members. In some instances, at least one force member is elastic. In some examples, at least one elastic force member is a constant force spring. In an embodiment where a constant force member is used, the reduced pressure generating assembly may further comprise an elongate rigid member that is configured to mechanically charge at least one constant force member. In a further embodiment of the reduced pressure generating assembly described herein, the reduced pressure generating assembly comprises a seal assembly, which may be configured to slide in the suction chamber along a movement axis. In such an embodiment, the reduced pressure generating assembly may be configured to maintain a fixed outer dimension along the movement axis independent of suction chamber content. In addition, the reduced pressure generating assembly may be configured to maintain a fixed outer configuration independent of suction chamber content. In an embodiment where a seal assembly is used, the non-planar proximal perimeter of the seal assembly may be a curved non-planar proximal perimeter. The reduced pressure generating assembly may comprise at least one variable force member, and in some further examples, at least one variable force member is configured to offset at least some friction acting on the seal assembly. In further examples, the reduced pressure generating assembly comprises at least one ribbon spring, which may be a substantially constant force ribbon spring or a variable force ribbon spring.

[0016] In a further embodiment of a system for treating a patient where the system comprises a reduced pressure generating assembly, the reduced pressure generating assembly may comprises a first dimension, a second dimension perpendicular to the first dimension, and a third dimension perpendicular to the first and second dimensions. In some instances, the first dimension is the largest dimension of the reduced pressure generating assembly. In other instances, the second dimension is greater than the third dimension. In some embodiments the third dimension may be no greater than about 5 cm, but in other embodiments, the third dimension may be no greater than about 4 cm, about 3 cm, about 2 cm, or about 1 cm. In some embodiments where the reduced pressure generating assembly comprises a suction chamber, the suction chamber may have a volume of about 500 cc or less. In other embodiments, the suction chamber may have a volume of about 250 cc or less. In still other embodiments, the chamber may have a volume of about 100 cc or less. In some embodiments, the reduced pressure generating assembly may be configured to reduce the pressure under the sealable wound covering by at least about 75 mm Hg. In other embodiments, the reduced pressure generating assembly may be configured to reduce the pressure by at least about 100 mm Hg. In still other embodiments, the reduced pressure generating assembly may be configured to reduce the pressure by at least about 125 mm Hg.

[0017] In a further embodiment where the system for treating a patient comprises an elongate rigid member, such elongate rigid member may comprise a releasable locking mechanism. In some instances, the releasable locking mechanism may comprise a latch and a release button couple to the latch. In an embodiment where the system for treating a patient comprises a seal assembly, the seal assembly may comprise at least one curved surface that is configured to push against at least one constant force member. In such an embodiment, the seal assembly may further comprise at least one convex struc-

ture that is different from the above mentioned curved surface. In another embodiment, a system for treating a patient may comprise a sealable wound covering and a non-electrically powered reduced pressure generating assembly, wherein the reduced pressure generating assembly further comprises a valve. In some instances, the valve is configured to control fluid communication with a suction chamber contained in the reduced pressure generating assembly. In some embodiments, the valve may be coupled to a rotatable knob. In yet another embodiment, the system for treating a patient may further comprise a connector tube that is configured to be coupled to the sealable wound covering and to the reduced pressure generating assembly.

[0018] Further provided herein is a system for treatment of a patient, where the system comprises a reduced pressure generating assembly and a sealable wound covering, which further comprises a sealant layer and a flexible attachment port configured with a lumen that passes through the sealant layer. In some embodiments, the reduced pressure generating assembly comprises a removable suction chamber with a longitudinal axis and a non-circular cross-sectional shape transverse to the longitudinal axis and a volume of 150 cc or less. The reduced pressure generating assembly may further comprise a piston assembly that is configured to slide in the suction chamber along the longitudinal axis. In some instances, the piston assembly may have a non-circular cross-sectional shape transverse to the longitudinal axis and a non-planar proximal perimeter. The reduced pressure generating assembly may further comprise at least two substantially constant force spring coils, which are coupled to the piston assembly and configured to reduce pressure in the suction chamber by at least about 50 mm Hg. In some embodiments, the reduced pressure generating assembly may further comprise a priming tool that is configured to push the piston assembly. In some instances, the priming tool may have a locking mechanism. In still other embodiments, the reduced pressure generating assembly may further comprise a connector tube that is configured to releasably attach to the sealable wound covering and to releasably attach to the removable reduced pressure chamber.

[0019] In another embodiment, a method for treating a patient is provide, where the method comprises steps of (a) detaching a non-electrically powered and non-circular reduced pressure generating device from a wound covering, (b) charging the reduced pressure generating device with potential energy without generating a reduced pressure, (c) attaching the recharged reduced pressure generating device to the wound cover, and (d) activating the recharged reduced pressure generating device to generate reduced pressure in an enclosure underneath the wound covering.

[0020] Further provided herein is a method for treating a patient, where the method comprises steps of (a) sealing a wound cover to a body site, and (b) reducing the pressure level at the body site using a vacuum generating device that has an elongate length and a non-circular cross-sectional shape transverse to the elongate length. In some embodiments, the vacuum generating device may be configured to maintain substantially constant reduced pressure level at the wound site without changing its external dimensions and independent of its orientation with respect to the body site. In such an embodiment, the method may further comprise a step of sliding a non-circular seal along a movement axis in a non-circular reduced pressure chamber, wherein the seal and the suction chamber have non-circular configurations transverse to the movement axis.

BRIEF DESCRIPTION OF THE DRAWINGS

[0021] A better understanding of various features and advantages of the embodiments described herein may be obtained by reference to the following detailed description that sets forth illustrative examples and the accompanying drawings of which:

[0022] FIG. **1** is a perspective view of one embodiment of the reduced pressure therapy device comprising a suction apparatus, an extension tube and a sealant layer.

[0023] FIG. **2** is a cut-away perspective view of one embodiment of a suction apparatus of FIG. **1** in a primed configuration.

[0024] FIG. **3** is a cut-away perspective view of one embodiment of a suction apparatus of FIG. **2** in a depleted configuration.

[0025] FIG. **4** is a perspective view of the embodiment of FIGS. **2** and **3** with a priming tool.

[0026] FIG. **5** is a perspective view of a sealant layer with an attachment port.

[0027] FIG. **6** is a cross-sectional perspective view of the sealant layer and the attachment port of FIG. **5**.

[0028] FIG. **7** is a perspective view of an extension tube connected to the sealant layer and attachment port of FIG. **5**.

[0029] FIGS. **8**A to **8**C depict an exemplary method for connecting an extension tube to a suction apparatus.

[0030] FIG. **9**A to **9**D are schematic illustrations of a reduced pressure therapy device in various configurations; FIG. **9**A depicts the device in a primed and locked configuration; FIG. **9**B depicts the device in a primed and unlocked configuration; FIG. **9**C depicts the device in an activated configuration; FIG. **9**D is a cross-sectional view of a portion of the priming tool in FIG. **9**C.

[0031] FIGS. **10**A and **10**B are schematic component views of another embodiment of a reduced pressure therapy device, comprising a housing chamber and a collection chamber, respectively; FIGS. **10**C and **10**D, illustrate the reduced pressure therapy device of FIGS. **10**A and **10**B in non-primed and primed configurations, respectively.

[0032] FIG. **11**A is a perspective view of another embodiment of a reduced pressure therapy device comprising multiple chambers; FIG. **11**B is an end view of the device in FIG. **11**A; FIG. **11**C-**11**E illustrate various embodiments of a reduced pressure therapy device with multiple chambers with respect to a sealant layer. FIG. **11**F is a perspective view of the embodiment from FIG. **11**A with a body strap.

[0033] FIG. **12** is a component view of another embodiment of a reduced pressure therapy device, comprising a collection chamber and a housing.

[0034] FIG. **13**A is a perspective view of another embodiment of a reduced pressure therapy device with a rotary activation interface. FIG. **13**B is a cross-sectional superior view of the device in FIG. **13**A.

[0035] FIG. **14**A is a perspective view of another embodiment of a reduced pressure therapy device with an actuator having a rack and pinion; FIG. **14**B is a cross-sectional view of the device from FIG. **14**A.

[0036] FIG. **15**A is perspective view of another embodiment of a reduced pressure therapy device; FIG. **15**B the device of FIG. **15**A held in a carrying case with an attachment strap.

[0037] FIG. **16**A is a perspective view of another embodiment of a reduced pressure therapy device; FIG. **16**B is a superior view of the device of FIG. **16**A; FIGS. **16**C and **16**D are side and end elevational views, of the device from FIG. **16**A; FIG. **16**E is a perspective view of a device holder; FIG. **16**F is a schematic perspective view of the device holder used with the device; and FIG. **16**G is a schematic illustration of embodiments for wearing or securing the device from FIG. **16**A to a user's body.

[0038] FIGS. **17**A and **17**B are perspective views of exemplary embodiments of an attachment mechanism for the reduced pressure therapy device.

[0039] FIG. **18** is schematically illustrates another embodiment of an attachment mechanism of a reduced pressure therapy device comprising an elastomer strap.

[0040] FIG. **19**A schematically illustrates another embodiment of a reduced pressure therapy device comprising a detachable and rotatable clip; FIG. **19**B is a posterior perspective view of the clip in FIG. **19**A.

[0041] FIG. **20** is a perspective view of another embodiment of a reduced pressure therapy device comprising an integrated clip.

[0042] FIGS. **21**A is a perspective view of a reduced pressure therapy device comprising a viewing window and a vacuum indicator; FIGS. **21**B and **21**C are perspective views of other examples of reduced pressure therapy devices with various window configurations.

[0043] FIG. **22** is perspective view of one embodiment of a suction apparatus.

[0044] FIGS. **23**A and **23**B are posterior and anterior perspective component views of the embodiment from FIG. **22**.

[0045] FIG. **24**A depicts another embodiment of a reduced pressure therapy device comprising a clear collection chamber wherein the device is not primed; FIG. **24**B depicts the device of FIG. **24**A in a primed configuration; FIGS. **24**C and **24**D or superior and side elevational views of the device in FIGS. **24**A and **24**B in an activated and partially expended state.

[0046] FIG. **25**A is a superior elevational view of the suction chamber; FIG. **25**B is a cross-sectional view of the distal end of the suction chamber.

[0047] FIG. **26**A is a component view of a fitting assembly; FIG. **26**B is a cross-sectional view of the fitting of the fitting assembly from FIG. **26**A.

[0048] FIG. **27**A is a schematic cut-away view of one embodiment of a connecting mechanism between a fitting and a suction chamber connector; FIGS. **27**B and **27**C are cross-sectional views of the connecting mechanism from FIG. **27**A.

[0049] FIGS. **28**A and **28**B are posterior and anterior component views of one embodiment of a spring assembly, respectively.

[0050] FIGS. **29**A and **29**B are posterior and anterior perspective component views, respectively, of one embodiment of a piston assembly and spring assembly. FIG. **29**C is a front elevational view of the piston assembly.

[0051] FIG. **30** is a cross sectional view of one embodiment of a piston assembly coupled to a spring assembly.

[0052] FIGS. **31**A to **31**C are schematic perspectives views depicting one example of a priming procedure using a priming tool.

DETAILED DESCRIPTION

[0053] While embodiments have been described and presented herein, those embodiments are provided by way of example only. Variations, changes and substitutions may be made without departing from the invention. It should be noted that various alternatives to the exemplary embodiments described herein may be employed in practicing the invention. For all of the embodiments described herein, the steps of the methods need not to be performed sequentially.

[0054] Modern adaptations of techniques to provide reduced pressure to wounds have been developed recently. There are several commercially available models of these types of reduced pressure dressing systems. These devices may comprise an interface layer that is placed into the wound, an occlusive layer that creates a seal around the wound, connection tubing that is in fluid communication with the interface layer and the wound, a separate exudates collection canister, and an electric pump that provides a source of vacuum. However, the electric pumps are bulky and heavy thereby reducing patients' mobility especially during prolonged treatment periods. These electrical pumps, in operation, can be noisy and conspicuous. Further, the placement of the interface layer, the occlusive layer, and the connection tubing is labor intensive and time consuming increasing patient dependence on health care professionals and further leading to higher health care costs. These systems typically have non-disposable pumps and systemic components that require significant maintenance and servicing and that carry the risk of spreading contamination and infection. Although these systems can be used to treat smaller wounds, they are designed to treat large wounds and are not usually used to treat smaller wounds. Since current systems depend on electrical power for their operation, they further constrain patient movement to areas having electricity or rely on limited battery power where no electricity is available.

[0055] Described herein are devices configured to apply reduced air pressure (i.e., a vacuum) to a treatment site, such as a damaged tissue cavity or other type of wound. In some embodiments, the device may also be used to apply reduced pressure to otherwise undamaged tissue. In one embodiment, the tissue therapy device may comprise a sealant layer and a suction apparatus. The sealant layer may be used to create a seal around an area of tissue requiring therapy. The suction apparatus fluidly communicates with the sealed enclosure formed by the sealant layer and reduces pressure within the enclosure adjacent to the damaged tissue. In some embodiments, the suction apparatus may be non-electrically powered. For example, the suction apparatus may be configured to self-generate reduced pressure, i.e., without requiring a separate power or vacuum source. A reduced pressure therapy device comprising a self-generating reduced pressure mechanism may provide a patient with freedom and mobility without concerns of running out of battery power or having access to an electrical outlet or vacuum generator. The sealant layer and the suction apparatus may be used to form a closed reduced pressure system to resist the backflow of gas into the system.

[0056] The reduced pressure may be self-generated by expanding the volume of air initially located in the sealed enclosure and/or suction apparatus from a smaller volume of the enclosure to a larger volume shared between the sealed enclosure and the suction apparatus. Upon expansion of the air within the sealed enclosure, the density of the air molecules is decreased and the pressure within the sealed enclosure is reduced to a sub-atmospheric level.

[0057] In one embodiment the tissue therapy device comprises a contact layer matrix that is placed into or over the

wound bed or other tissue defect. In some embodiments, the contact layer matrix may be used to distribute the reduced pressure more evenly through the wound bed, and may also provide a scaffold or contact surface which promotes healing. In another embodiment, the damaged tissue cavity, packed with the contact layer matrix, is then placed under a sealant layer to produce a sealed enclosure containing the contact layer and the wound bed. Fluid communication to the interior of enclosure is provided by an attachment port of the sealant layer.

[0058] In some embodiments, the attachment port may comprise a collar with an inlet opening, a soft elastomeric body, and an outlet port. In some examples, the collar may comprise a rigid or flexible material, and the collar may be oriented at any of a variety of angles with respect to the sealant layer, including a perpendicular angle. The outlet port of the attachment port may also be flexible or rigid, and may be oriented at any of a variety of angles with respect to the sealant layer or collar. In some examples, the outlet port may be oriented generally parallel to the plane of the sealant layer, or even below the parallel plane of the sealant layer, depending upon the height of the collar, but in other examples, the outlet port may be bent or angle above the plane of the sealant layer. The various components of the attachment port may or may not be directly connected to one another, and the inlet and the outlet may have some degree of freedom of movement relative to one another.

[0059] In some embodiments of the device, the device may comprise a sealant layer made of a hydrocolloid material or any other material known to those skilled in the art. The hydrocolloid sealant layer may be semi-porous and breathable to absorb moisture from the wound while protecting the skin. In addition, the hydrocolloid sealant layer is typically thicker than other materials such as acrylic adhesives to allow for easier placement with less folding and wrinkling and to seal potential fluid leak paths.

[0060] In one embodiment of the device disclosed herein, the attachment port is directly mounted to a distal portion of the suction apparatus. In other embodiments the attachment port is connected to the suction apparatus via an extension tube. In some embodiments, the extension tube may be adapted to mitigate entanglement. The suction apparatus and the extension tubing may have similar fittings and release buttons to prevent accidental disconnection. In embodiments in which extension tubing is used, the distal end of the extension tubing is connected to the distal end of the suction apparatus with similar fitting.

[0061] Some embodiments of the device disclosed herein comprise a pressure gauge integrated into the attachment port or another component. The mounting of the pressure gauge into the attachment port enables accurate measurement of pressure level within the enclosure adjacent to the wound and formed by the sealant layer. The pressure gauge described herein may less susceptible to incorrect pressure readings that are typically caused by clots in the tubing connecting the reduced pressure source to the wound.

[0062] In some embodiments of the reduced pressure system disclosed herein, the suction apparatus reduces the air pressure within the enclosure adjacent to the damaged tissue by forcefully expanding the volume of air within the enclosure without changing the external dimensions of the reduced pressure generating unit. In other embodiments, the tissue therapy device may self-regulate the pressure to a substantially constant level.

[0063] In one embodiment, the suction apparatus comprises a chamber, a sliding seal, a valve, and an activation system. The suction cartridge may comprise a release button and an activation button in a distal portion. The activation button may be connected to a sliding blade valve which prevents fluid communication from the enclosed area adjacent to the wound to the chamber when in the "off" position. When the activation button is depressed, the sliding blade valve may switch to an "on" position to permit fluid communication from the enclosure to the chamber. The activation button may be spring loaded to be biased to the "off" position but once it is depressed, a spring-loaded latch may engage to remain in the "on" position. The release button may be adapted and configured to allow detachment of any article (e.g., extension tubing or sealant layer attachment port) from the suction apparatus and to terminate fluid communication between the suction chamber and the enclosed area. The release button may engage the interlock segment to pull the latch away from the activation button. If the activation button is in the "on" position, it will revert back to the "off" position by virtue of the spring loading.

[0064] In one embodiment of the reduced pressure system, the suction chamber comprises an ellipsoidal cylinder having a sliding seal concentrically disposed therein. The chamber has a variable effective volume defined by the distance between the distal end of the chamber, which is located adjacent to the opening connected to the sliding blade valve and a current position of the sliding seal. In the primed state, the seal is closest to the distal end of the suction cartridge, and the effective volume of the chamber is zero or nearly zero. The sliding seal may be connected to one or a series of springs which may be used to bias the seal towards an activated state where the effective volume of the chamber is the maximum. The springs may have any of a variety of configurations, including ribbon springs. The ribbon spring may be a substantially constant force spring or a variable force spring. In some examples, a combination of spring types may be used. In still other examples, a single ribbon may be configured with a coil at each end and attached to a slidable seal at a middle region of the single ribbon. In one embodiment of the device, the spring(s) may exert a force of less than 0.5 pounds. In other embodiments of the present invention the constant force spring(s) may exert a force of less than 1 pound. In some embodiments of the reduced pressure system the constant force spring(s) may exert a force of less than 5 pounds. In other embodiments of the device disclosed herein the substantially constant force spring(s) may exert a force of less than 20 pounds. In other examples, the force per square inch exerted across the collection volume of the device may be in the range of about 0.1 psi to about 50 psi, in some examples about 0.5 to about 20 psi, and in other examples about 1.5 psi to about 5 psi. This pressure may be exerted by a single force member or may be the aggregate pressure from two or more force members. The force or pressure may be selected based on the type, size, location, or another suitable characteristic of the wound being treated.

[0065] In some embodiments of the tissue therapy system the suction cartridge is fabricated from a rigid polymer adapted to maintain the external shape of the suction chamber shape under reduced pressure. The suction chamber can be made of any suitable polymer such as, but not limited to polycarbonate, co-polyester, polyethylene, polypropylene, acrylic, ABS, glass, medical-grade polymers, or a combination thereof.

[0066] In other embodiments of the reduced pressure system, the sliding seal is fabricated from a material adapted to create an airtight separation between the portion of the suction apparatus below it and the remainder of the suction apparatus. The material may be elastomeric or non-elastomeric. The sliding seal can be made of materials such as: silicone, fluorosilicone, nitrile, natural rubber, thermoplastic elastomer, thermoplastic urethane, butyl, polyolefin, polyurethane, styrene, polytetrafluoroethylene, any other suitable material, or a combination thereof.

[0067] In some embodiments of the tissue therapy system, the suction cartridge may be coated using a friction mitigating lubricant to reduce movement of the sliding seal due to friction within the suction chamber and to reduce the likelihood of the seal sticking after being in a static position for prolonged periods. The lubricant coating material may be polydimethysiloxane, perfluoropolyether, mineral spirits, synthetic oils, polyxylene, any other suitable lubrication polymer or material, or any combination thereof.

[0068] In one embodiment of the reduced pressure system disclosed herein the suction apparatus springs are placed in a high potential energy extended state prior to activation. In other embodiments of the device, prior to activation, the sliding blade valve is closed and the chamber is completely sealed. In such embodiments, the springs are prevented from retracting because the extremely small volume of air in the chamber resists the expansion that would be caused by the constant force springs' retraction of the sliding seal. The device is ready to be activated once the wound bed is sealed with the sealant layer, and the sealant layer is connected to the suction cartridge either directly or via an extension tube.

[0069] When the tissue therapy system disclosed herein is activated, fluid communication is established between the suction chamber and the sealed wound enclosure. Since there is a finite amount of air within the enclosure (which is initially at atmospheric pressure), upon activation, the constant force springs will retract the sliding seal and expand the effective volume of the suction chamber. As known by the ideal gas law, as a volume of air expands adiabatically, the pressure of the air will be reduced, and subject the sealed wound enclosure to reduced pressure.

[0070] In some embodiments, the tissue therapy system may be used to maintain a substantially constant level of reduced pressure despite the presence of exudates and air leaked into the system. The sliding seal is a mechanical system wherein the seal position is adapted and configured to be in equilibrium based on the traction of the substantially constant force springs, other traction elements in the system, and/or the pressure differential across the chamber seal. Other traction elements in the system may include frictional forces (i.e. static and/or kinetic frictional forces). If the reduced pressure were to recover towards atmospheric within the chamber, the pull of the springs would be greater than the pull due to the pressure differential. This, in turn, will force the springs to retract and cause a simultaneous increase in the volume of the chamber. This increase in volume will result in a reduction of pressure away from atmospheric pressure within the chamber, until a new equilibrium is reached where the pressure differential and the substantially constant spring force reach a new equilibrium. In some embodiments, the walls of the suction chamber are straight thereby ensuring that the level of reduced pressure stays constant regardless of the actual position of the seal within the chamber.

[0071] In some embodiments, the suction apparatus may be configured to generate a reduced pressure which may be generally characterized by the absolute pressure level and/or by a pressure level reduction relative to the atmospheric pressure. In some embodiments, the device is configured to generate a level of reduced pressure between about 0 and about 760 mmHg. In some embodiments, the generated amount of reduced pressure in the enclosure formed by the sealant layer and treatment site is more than about 10 mmHg, about 20 mmHg, about 50 mmHg, about 80 mmHg, about 100 mmHg, about 150 mmHg, about 200 mmHg, about 500 mmHg, about 700 mmHg, or even about 750 mmHg or more. The device may generate an absolute reduced pressure underneath the sealant layer where the reduced pressure is anywhere between about 0 and about 760 mmHg. In some embodiments, the generated level of reduced pressure in the enclosure formed by the sealant layer is less than about 700 mmHg, sometimes less than about 600 mmHg, other times less than about 400 mmHg, or even less than about 250 mmHg, about 125 mmHg, about 75 mmHg, about 50 mmHg, less than about 25 mmHg, or less than about 10 mmHg. In some embodiments, the sealant layer generally follows the perimeter of the area of tissue being treated. The tissue therapy devices may have different collection chamber sizes which allow for treatment of larger, more exudative wounds while maintaining the smallest configuration possible for enhanced usage comfort. This may be particularly advantageous for small wounds or treatment sites, as a smaller reduced pressure source can be partially or fully integrated into the dressing or sealant layer. In some embodiments, the cavity of the suction apparatus is about 50 cc or less in volume, while in other embodiments, the cavity may be about 100 cc in volume. In other embodiments, the collection chamber is less than about 150 cc in volume. In some embodiments, the collection chamber is less than about 200 cc in volume. In other embodiments, the collection chamber is smaller than about 300 cc in volume. In some embodiments, the collection chamber is less than about 500 cc in volume. In other embodiments, the collection chamber is less than about 1000 cc in volume. In other embodiments, the cavity of the suction apparatus may be at least about 50 cc, about 100 cc, about 150 cc, about 200 cc, about 300 cc, about 500 cc or about 1000 cc or more.

[0072] In certain embodiments, the device comprises an elongated rigid member that fits into an opening the proximal end of the suction apparatus and serves as a lever that charges the constant force springs with potential energy by pressing the springs towards the device's distal end until the latch, embedded within said lever, locks into place. In some embodiments, the elongated member is integrated into the suction apparatus body and serves as a cap to the suction apparatus. In some embodiments, the elongated lever enables safe storage of the suction apparatus as it prevents the springs from retracting due to micro-leaks that may cause the springs to lose the energy stored in them. In other embodiments, it enables recharging of the spring mechanism when accidental discharge occurs or an undetected leak is present while the device is in use.

[0073] In some embodiments, the suction apparatus comprises an elongated rigid member adapted and configured to be inserted into a mating opening in the proximal end of the suction generating unit. The elongated rigid member contacts the rigid portion of the chamber seal and thus can be used to mechanically push the seal down the chamber against the constant force springs thereby imparting potential energy into

the constant force springs. This pushing motion is completed with the suction cartridge disconnected from the extension tubing or attachment port, and with the activation button and the sliding blade valve in the off position. Once the sliding seal reaches a point close to maximum spring extension, a latch tab on the elongate rigid member will engage a slot in the suction apparatus body and prevent spring retraction. At this point, the sliding blade valve should be closed by depressing the release button thereby sealing the chamber. The elongate member can then be removed by pressing the latch tab leaving the suction apparatus ready for activation.

[0074] FIG. **1** illustrates one embodiment of a reduced pressure therapy device **100**, comprising a suction apparatus **101**, an extension tube **102**, and a sealant layer **103**. The sealant layer **103** may further comprise an integrated attachment port **106** configured to connect the sealant layer **103** to the extension tube **102** and/or directly to the suction apparatus **101**. In some embodiments, the connector of the extension tube **102** or suction apparatus **101** may be configured to rotate about an axis of attachment port **106**. In some embodiments, the attachment port **106** may be configured to rotate around its base **110** and/or to bend toward and/or away from the sealant layer **103**. For example, the attachment port **106** may be configured to freely rotate about 360 degrees or more, or to provide a limited rotation range less than about 360 degrees, including but not limited to about 315 degrees, about 270 degrees, about 225 degrees, about 180 degrees, about 135 degrees, about 90 degrees, or about 45 degrees, for example. In other embodiments, the tubing connector and/or the connector interface of the attachment may be configured to rotate with respect to the longitudinal lumen axis. The attachment port **106** may have a fixed orientation that is generally parallel to the plane of the sealant layer, but in other configurations, may be angled below the parallel plane or above the parallel plane. In still other examples, the attachment port **106** may be configured to bend or pivot relative to the sealant layer **103**. The range of bending or pivoting may be from about 0 degrees to about 45 degrees or about 90 degrees, from about 0 degrees to 135 degrees or about 180 degrees, or from about −15 degrees or about −30 degrees to about 45 degrees, about 90 degrees, about 135 degrees, about 180 degrees, 195 degrees or about 210 degrees. In certain embodiments, the attachment port **106** may be configured to rotate and pivot.

[0075] The extension tube may be coupled to the attachment port by any of a variety of mechanisms. For example, the attachment port may comprise a resistance or interference fitting which may be inserted into the lumen of the extension tube. The resistance fitting may comprise one or more flanges configured to resist decoupling of extension tube. In other examples, the extension tube may be inserted into the lumen or opening of the attachment port, and the attachment port may comprise a push-in fitting, such as a John Guest fitting (Middlesex, UK). In other embodiments, connectors on both components may be used, including threaded or mechanical interlocking fits. The connectors may be configured to facilitate both coupling and decoupling of the components.

[0076] In the example depicted in FIG. **1**, one end of the extension tube **102** comprises a port connector **105** configured to couple to a connector interface **111** of the attachment port, and the other end may comprise a suction apparatus connector **107** configured to couple to a connector interface **113** of the suction apparatus **101**. In the depicted embodiment, the connector interface **111** of the attachment port **106** and the suction apparatus connector **107** of the extension tube **102** may comprise male-type connectors, while the connector interface **113** of the suction apparatus **101** and the port connector **105** of the extension tube **102** may comprise female-type connectors. The particular male-female configuration described above is merely exemplary, and in other embodiments, the male/female configuration may be reversed, any other type of complementary interface may be used, including interfaces which are non-directional and permit the connector of the extension tube **102** in any direction. These or other complementary configurations may be used to permit both the direct connection of the suction apparatus **101** and the sealant layer **103**, as well as the optional use of the extension tube **102**. In some embodiments, the extension tube(s) and/or the extension tube connector(s) may be configured so that multiple extension tubes may also be joined together, either in a specific order or in any order. The extension tube may also comprise one or more stress-relief or anti-kink structures, e.g. a helical winding or other tubular support, which may resist pinching or other deformations of the tube. In FIG. **1**, for example, the port connector **105** and the suction apparatus connector **107** of the extension tube **102** comprises a flared openings **115** and **117**, respectively, which permit at least some deflection of the tube **102** relative to the connectors **105** and **107** while distributing the bending stress along the length of the flared opening **115** and **117** to resist pinching. In other embodiments, the stress relief structures of the connectors comprise one or more bendable or deformable projections, which may or may not be flared.

[0077] One or more connectors of the extension tube may also comprise a locking mechanism to facilitate decoupling and/or attachment of the extension tube. In some examples, a locking mechanism may resist inadvertent decoupling from the sealant layer and/or suction apparatus. In the example depicted in FIG. **1**, the port connector **105** of the extension tube **102** comprises a locking mechanism with a connector release button **108** configured to resist decoupling until the button **108** is pressed. The connector release button **108** may be coupled to a movable structure that forms an interlocking or resistance fit with a complementary structure or surface on the attachment port **106**. In some embodiments, the connector release button **108** may be spring loaded or otherwise biased, and may or may not provide additional sealing and/or locking force between the connector **105** and the attachment port **106**. In other variations, other locking interfaces, including sliders, levers or knobs, may be used. The attachment port **106** may comprise one or more gripping materials or textured gripping surfaces **109**. The gripping surface **109** on the exterior of the attachment port **106** may facilitate manual connection and disconnection of the connectors on the extension tube **102** or the suction apparatus **101**. The grip surface **109** may comprise one or more flanges or ridges, for example, and/or a high traction material such as rubber or a block copolymer with polystyrene and polybutadiene regions, e.g., KRATON® polymers by Kraton Polymers, LLC (Houston, Tex.). Gripping materials or structures may also be provided on the connectors **105** and **107** and/or the suction apparatus **101**. In FIG. **1**, for example, the suction apparatus **101** comprises a nosepiece **104** having a reduced width relative to the body **121** of the suction apparatus **101**. The nosepiece **104** may facilitate gripping of the suction apparatus **101** when detaching or pulling it apart the extension tube **102** or attachment port **106**.

[0078] In some embodiments, the suction apparatus may comprise a rigid polymer configured to generally maintain its shape under reduced pressure. The suction apparatus can be

made of any suitable polymer such as polycarbonate, copolyester, polyethylene, polypropylene, acrylic, ABS, glass, or any other polymer known to those skilled in the art.

[0079] FIGS. **2** and **3** are detailed views of one embodiment of the suction apparatus **101** in FIG. **1**. The connector interface **113** may comprise a connector **200** which may be coupled to the connector **107** at the proximal end of the extension tube **102**, and/or the connector interface **111** of the attachment port **106** as depicted in FIG. **1**. The suction apparatus **101** may further comprise a sliding seal **207** located inside a suction chamber **202**. FIG. **2** depicts the sliding seal **207** in a distal position near the distal end **208** of the suction chamber **202**, and FIG. **3** depicts the seal **207** in a proximal position near the proximal end **209** of the suction chamber **202**. The sliding seal **207** may be mounted on a seal mount **210** and is configured to traverse between the distal end **208** and proximal end **209** of the chamber **202** while maintaining a substantial airtight seal. The suction chamber **202** may be also be characterized by the portions of the chamber **202** separated by the seal **207**. For example, the suction chamber **202** may comprise a collection chamber **216** located between the distal end **208** of the chamber **202** and the seal **207**, and a working chamber **218** between the proximal end **209** of the suction chamber **202** and the seal **207**. The collection chamber **216** may be configured to generate a reduced pressure and is in fluid communication with the connector **200** to provide reduced pressure under the sealant layer **103**. In the particular embodiment depicted in FIGS. **2** and **3**, the collection of materials suctioned from a wound and the generation of reduced pressure both occur in the collection chamber **216**, but in other embodiments, the collection chamber and reduced pressure generating chamber may be different structures.

[0080] The working chamber **218** of the suction apparatus **101** may contain one or more force or bias members, and may also provide access to the seal **207** to permit priming or charging of the force or bias members. A portion of the force or bias members may be attached or fixed to a portion of working chamber **218**, while another portion is attached to the seal **207**. In the particular embodiment depicted in FIG. **2**, the force member comprises two constant force springs **212** with proximal ends **215** mounted in the working chamber **218** using posts or pins **213**, while their distal ends **217** are attached a seal mount **210** that is coupled to the seal **207**. In some embodiments, the seal **207** and the seal mount **210** may be integrally formed. The sliding seal **207** may mounted on a seal mount **210** by methods such as injection over-mold, adhesive bonding, or mechanical bonding, or by a mechanical resistance or interlocking fit. In other embodiments, the force members may be directly coupled to the seal **207**. The functionality and structure of the seal **207** is described in greater detail below.

[0081] The volumes of the collection chamber **216** and the working chamber **218** may vary, depending upon the position of the seal **207**. In FIG. **2**, where the seal **207** is in an extended position and in a primed configuration, the effective volume of the collection chamber **216** may be about zero or close to zero. In FIG. **3**, wherein the seal **207** is in a retracted position, the effective volume of the collection chamber **216** may be at or near the volume of the suction chamber **202**, notwithstanding the volume taken up by the seal **207**, seal mount **210** and/or the bias members. In other examples, the volume of the collection chamber may be generally based upon the equilibration of the force generated by the bias members and the counteracting force resulting from the reduced pressure generated in the collection chamber **216**. The volume of the working chamber **218** may be inversely related to the volume of the collection chamber **216**. In some instances, the maximum volume of the working chamber **218** may be less than the volume of the suction chamber **202**, which may result from volume displacement by the seal **207** or seal mount **210**, and/or by other structures located within the working chamber **218** or structures which limit the movement range of the working chamber **218**.

[0082] Access to the seal **207** may be achieved through the access opening **224** located about the distal end **209** of the housing **220**. As the sliding seal **207** traverses from the extended position as depicted in FIG. **2** to the retracted position as depicted in FIG. **3**, the interior volume of the collection chamber **216** increases from about zero to about the maximum volume provided in the fully retracted position, the suction apparatus **101** comprises a collection chamber **216** with the maximum effective collecting volume. When the collection chamber **216** is in airtight fluid communication with a sealed wound enclosure and a good dressing seal is obtained within the wound enclosure, expansion of the volume of the collection chamber **216** will reduce the pressure level in the sealed wound enclosure to a point where an equilibrium between the restoring force applied on the sliding seal **207** by the constant force springs **212** and the pressure differential across the sliding seal **207** is reached.

[0083] Some embodiments of the suction apparatus **101** may further comprise a valve **201** which may be configured to selectively permit fluid communication between the connector **200** to a collection chamber **216**. The valve **201** may have any of a variety of configurations, including a rotating cylinder valve or a blade valve, for example. The valve may also be a multi-directional valve, a bi-directional valve or a one-way valve. The configuration of the valve **201** may be controlled by an activation button **203** or other type of actuator (e.g. a knob, switch, lever or slider). In some embodiments, the activation button **203** may comprise a first configuration where the chamber valve **201** closes or blocks fluid communication between the collection chamber **216** and the connector **200**, and a second position where the valve **201** is open or allows passage of air and/or exudates to flow from the connector to the collection chamber **216**. In some further embodiments, some valves may have additional configurations to selectively permit infusion of materials into the suction apparatus **101** and/or into the sealant layer, and/or configurations to selectively permit removal of air and/or materials from the collection chamber.

[0084] In further embodiments, a spring mechanism **204** may bias the valve **201** or its actuator to a closed or open position. For example, the spring mechanism **204** may be configured to bias the valve **201** to a closed position which blocks fluid communication between connector **200** and the collection chamber **216**. When the valve **201** is actuated to open the fluid communication, a latch mechanism **205** or other type of locking mechanism may be used to engage the valve **201** and prevent the spring mechanism **204** from closing the valve **201**. The locking mechanism may also comprise a release mechanism configured to permit selective disconnection or separation of an extension tube or sealant layer. For example, the connector **200** may be configured to prevent or resist disconnection of any components connected to the suction apparatus **101** through the connector **200** until a release button **206** or other actuator is depressed or manipulated. The

release mechanism may comprise one or more displaceable or movable resistance or interlocking structures, for example. In other embodiments, the lock and/or release mechanism may be located on the extension tube or the attachment port of the sealant layer.

[0085] In some embodiments, the release button **206** may comprise a mechanism to control the valve **201**. For example, the release button **206** may be configured to disengage the latch **205** from the valve **201**, which permits the spring mechanism **204** to reposition the valve **201** to the closed position blocks permit fluid communication between the connector **200** and the collection chamber **216**. In other embodiments, the release button **206** may be configured to control a second valve in the fluid communication pathway.

[0086] In some embodiments, the suction apparatus **101** may comprise a suction chamber **202** with a non-circular cross-sectional shape, with respect to a transverse or perpendicular plane to the movement axis of the seal **207**. The non-circular cross-sectional shape may include but is not limited to a generally rectangular or generally ellipsoidal shape, for example. The suction apparatus **101** may comprise a first transverse dimension that is greater than a second transverse dimension, wherein each transverse dimension is transverse to the movement axis of the sliding seal **407**. In some embodiments, the ratio of the first transverse dimension and the second transverse dimension is at least about 1.5, sometimes at least about 2, and other times at least about 3, or about 5 or more.

[0087] To prepare the suction apparatus **101** for generating a reduced pressure level in the sealed wound enclosure, the device is primed, i.e., the sliding seal **207** and the substantially constant force springs **212** may be placed in a distal or extended position within suction chamber **202**. Priming of suction apparatus **101** may be performed using a push mechanism or tool inserted through an opening **224** configured to provide access to the seal **207** or seal mount **210**. Examples of a push mechanism including the priming tool **400** depicted in FIG. **4**, which is described in greater detail below. Referring back to FIG. **2**, the sliding seal **207** is placed at an extended position, with the constant force springs **212** also in an extended state and charged with potential energy. In some embodiments, when the suction apparatus **101** is primed, the blade valve **201** is closed to seal the collection chamber **216**. In these embodiments, retraction of the seal **207** by the constant force springs **212** is resisted or prevented because the small volume of air in the collection chamber **216** resists the expansion that would be caused by the retraction of the constant force springs **212**. The suction apparatus **101** may comprise a locking mechanism to keep the sliding seal **207** in the primed position. In some embodiments, the priming mechanism or tool may also be used to keep the sliding seal **207** in position and resist retraction by the constant force springs **212**

[0088] Once the wound bed is sealed with a sealant layer and the primed therapy device is connected to the suction apparatus, the primed therapy device may be activated to generate reduced pressure in the wound bed. In some embodiments, a user of the therapy device described herein may activate the therapy device by pressing down the activation button **203**. In some examples, prior to activation, the activation button **203** may be biased to the "off" position. Pressing down or otherwise manipulating the activation button causes the valve **201** to open fluid communication between the collection chamber **216** and the sealed enclosure. Once the activation button **203** is pressed down, a spring-loaded latch on the interlock piece may engage to keep the activation button **203** in the "on" position.

[0089] When the reduce pressure therapy device is activated, fluid communication is established between the sealed wound enclosure and the collection chamber **216**. If a sufficient dressing seal is obtained within the sealed enclosure, there should be a finite amount of air and/or exudate within the sealed enclosure which is initially at atmospheric pressure. Upon activation of the suction apparatus **101**, the charged constant force springs **212** that are will then retract the sliding seal **207** and expand the volume of the collection chamber **216**. Movement of the sliding seal **207** will stop at an equilibrium position where the traction force of constant force springs **212** is equal to the pressure differential across the sliding seal **207**.

[0090] As the collection chamber is filled with exudates and/or air from potential air leakage into the sealed wound enclosure or other location in the system, the sliding seal **207** will retract towards the proximal end **209** of the suction chamber **202** until the constant force springs **212** reach a retracted position, as depicted in FIG. **3**. Further retraction may be stopped either by a limit structure (if any) in the suction chamber **202**, or as a result of the decreasing counterbalancing force as the reduced pressure collection chamber **216** returns to atmospheric pressure from increases in the joint volume shared by the wound enclosure and the collection chamber **216**. The therapy device may then be removed from the treatment site, or the suction apparatus **101** may be disconnected from the sealant layer **103**. As mentioned previously, disconnection may be achieved by pressing or actuating the release button **206**. Once the release button **206** is pressed down or actuated, the blade chamber valve **201** will be engaged in its "off" position which will terminate or block any fluid communication between the sealed wound enclosure and the collection chamber **216**. Also, the spring-loaded latch **205** on the interlock piece that forces or maintains the activation button **203** in the "on" position will be pulled away or otherwise manipulated to permit the activation button **203** will revert to its "off" position.

[0091] As depicted in FIG. **4**, some embodiments of the tissue therapy system may comprise a priming tool or rod **400** which may be inserted into the suction apparatus **101**. The rod **400** may be pushed through an opening **224** of the housing **220** to push the sliding seal towards the distal end **208** of the suction chamber **202** and to charge the constant force springs with potential energy. In some embodiments, the suction apparatus **101** may be configured so that the priming tool **400** contacts or engages the seal mount (**210** in FIG. **2**) at or adjacent to where the constant force springs **212** are coupled to the seal mount **210**. In other embodiments, the suction apparatus **101** may be configured such that the priming tool **400** directly pushes against the springs **212**, in addition to or in lieu of pushing against the seal mount **210**. In some embodiments, once the sliding seal is moved to the primed configuration, a locking structure or latch **402** located on the shaft **403** of the priming tool **400** may engage a complementary structure (e.g. slot **219** in FIG. **3**) of the housing **220**. Thus, the priming tool **400** may be used to lock the seal into its primed configuration and resist the constant force springs from retracting and losing its potential energy. The priming tool **400** may also comprise a handle **412** to facilitate gripping and use of the tool **400**.

[0092] In other examples, the priming mechanism may be used without removing the priming tool from the device. In these embodiments, as the seal retracts, the priming tool will extend out of the accessing opening of the housing. In still other examples, a priming mechanism other than a linear push-based mechanism may be used, including but not limited to one or more rotatable knobs that may be used to unwind and extend the substantially constant force springs or other bias members to prime the device. In some other examples, where the force required to overcome the springs and prime the device may be excessive, the priming tool may be threaded and the priming tool opening may be configured with a screw drive coupled to a handle that may provide a mechanical advantage to a user priming the device. In still other examples, embodiments comprising a rotatable knob may comprise a slide-out handle, a swing out handle or an attachable handle to provide the user with greater torque when winding the knob.

[0093] Referring back to FIGS. **2** and **3**, the access opening **224** may be configured to restrict or limit pivoting or angulation of the priming tool **400** during insertion. The housing **220** may also comprise guides **222** that may further restrict or limit the motion of the priming tool **400** during insertion. The priming tool **400** may also comprise guide structures. FIG. **4**, for example, depicts the priming tool **400** with ridges or raised edges **410** which may facilitate tracking of the shaft **403** along the constant force springs **212** as the springs **212** are extended. The distal end of the priming tool **400** and/or the seal mount **210** may be configured with complementary interfaces to resist decoupling as force is being applied using the priming tool **400**.

[0094] In some embodiments, the priming procedure described above may be performed when the suction apparatus disconnected from any other components, e.g., extension tubing, attachment port or sealant layer. After priming the suction apparatus, the suction apparatus is attached to a sealant layer, directly or through extension tubing, the priming tool is removed, and the activation button on the suction apparatus is pressed to apply a reduced pressure within the sealed wound enclosure created by the sealant layer. In other embodiments, this priming process is completed with the activation button in the "off" position. Such design may prevent elevated pressure from being applied onto the damaged tissue inadvertently. A one-way valve in communication with the collection chamber may also be provided to expel air from the collection chamber during the priming procedure. Referring still to FIGS. **3** and **4**, in some embodiments, once the suction apparatus **101** is primed, a latch tab **404** or other actuator on the shaft **403** of the priming tool **400** can be pressed or manipulated to disengage the latch **402** from the interlocking slot **215**, thereby allowing the priming tool **400** to be withdrawn from the suction apparatus **101**. In some embodiments, the priming tool **400** may be left in the suction apparatus to ensure safe storage of the suction apparatus since it prevents the constant force springs from retracting due to micro-leaks. In some examples, the priming procedure may be performed at the point-of-manufacture, while in other examples, the suction apparatus may be provided in an unprimed state and primed at the point-of-use.

[0095] In some embodiments, the seal mount **210** may further comprise stabilizers **211** which prevent or resist excessive angular displacement of the sliding seal **207** with respect to the primary axis of the suction apparatus **101**. The stabilizers **211** may comprise longitudinal extensions or projections from the seal mount **210**. The stabilizers **211** may or may not have an orientation that is generally parallel to the longitudinal movement axis of the seal **207**. Also, a stabilizer **211** may be configured to be in sliding contact with the wall of the suction chamber **202** along its entire length, or may be configured to only partially contact the wall of the suction chamber **202**. For example, a portion of the stabilizer may curve or angle away from wall of the suction chamber. In some embodiments, the interior of the suction apparatus **101** further comprises a friction-reducing lubricant or a lubricous coating. In other examples, the seal and/or seal mount may have a variable thickness along its perimeter or contact with the wall of the suction chamber. In some instances, an increased thickness may increase the stability of the seal along a dimension of the seal. In some examples, the portion of the seal and/or seal mount with the increased thickness may vary depending upon the transverse dimension intersecting a) the portion of the perimeter and b) the central movement axis of the seal and/or seal mount. Other examples of seals and/or seal mounts with a variable thickness are provided in greater detail below.

[0096] FIG. **5** depicts the sealant layer **103** of FIG. **1** without an attached extension tube. The main body **500** of the sealant layer **103** may comprise a substantially flat, flexible material which is configured to form an airtight seal over a portion of tissue to be treated by adhering to the skin circumferentially to the damaged tissue section or wound. In some embodiments, the bottom surface of sealant layer **103** comprises a pressure sensitive adhesive (PSA) layer **502**, including but not limited to any of a variety of silicone PSAs. The main body **500** of the sealant layer **103** may comprise an average thickness between 0.001 and 0.5 inches thick and may or may not be of sufficient thickness to resist wrinkling or inadvertent folding onto itself. As mentioned previously, the attachment port **106** may be configured to swivel about the axis normal to the plane which approximates the surface of sealant layer **103**. In some embodiments, the swivel range may be limited, but in other embodiments, the attachment port **106** is able to swivel **360** degrees or more. In some embodiments, attachment port **106** further comprises gripping surfaces which facilitate connection and disconnection of attachment port **106** to appropriate fittings.

[0097] FIG. **6** depicts a cross sectional view of the sealant layer **103**. In this embodiment, attachment port **106** further comprises a fenestration or opening **600** in the main body **500** of sealant layer **103** which is in fluid communication with a conduit **601** in the attachment port **106**. In some embodiments, the sealant layer **103** further comprises a fixed swivel fitting base **602** which is adhered or attached to the main body **500** of the sealant layer **103**. The attachment port **106** further comprises swivel fitting collar **603** which is mated to swivel fitting base **602** in an airtight manner and allows attachment port **106** to rotate about swivel fitting base **602**. The attachment port **106** may further comprise a connector **604** to facilitate airtight connection to other components, such as the extension tubing or the suction apparatus. In some embodiments, the connector **604** and/or the swivel fitting collar **603** of the attachment port **106** may be coupled to in flexible elastomeric body **605**. The conduit **601** passes through swivel fitting collar **603**, a hollow section of the elastomeric body **605** and the connector **604**. In some embodiments, the swivel fitting collar **603** and connector **604** may comprise a rigid material but the flexible elastomeric body **605** permits relative movement between the collar **603** and the connector **604**.

In some examples, the flexible body **605** may be configured to permit some bending while resisting pinching comprise one or more conduit support structures to resist pinching of the flexible body that may result in blockage of conduit **601**.

[0098] In some embodiments, the device may be used for the treatment of lower extremity wounds. The suction apparatus may be configured with a low profile with respect to its placement against the skin or body of a patient, e.g. the suction apparatus has a first outer dimension that is smaller than that is perpendicular to the surface that facilitates its placement on the leg or thigh underneath a normal pant leg, that low profile is achieved through non circular suction chamber design which lowers the apparatus' profile while enabling the suction chamber to handle large amounts of exudates. In some embodiments of the device it comprises an attachment mechanism configured to attach the device to the user's limb or torso, or to a belt or other article of clothing. In some embodiments of the device the attachment mechanism is a fabric leg strip with adjustable self gripping fasteners. The fabric leg strip can be constructed from cotton or foam or any other material known to those skilled in the art. In other embodiments of the device the attachment mechanism is a flexible pocket adapted to contain the suction apparatus and attach to the body.

[0099] As mentioned previously, the reduced pressure therapy device may be used with an extension tube, and in some examples, the extension tube may be custom sized. The desired length of the extension tube **102** may be determined either by assessing the distance to the suction apparatus placement location using the extension tube. As illustrated in FIG. **7**, an extension tube **102** may be first attached to a sealant layer **103** before cutting, but in other examples, the extension tube **102** may be attached or unattached to the sealant layer and/or suction apparatus when cut. Also, the sealant layer and suction apparatus may or may not be applied to the treatment site or placement location when assessing the extension tube length. Once the desired length of the extension tube is determined, the extension tube **102** may be cut to remove a proximal tubing segment. As shown in FIGS. **8**A to **8**C, the extension tube **102** may be connected to the suction apparatus **101** using a connector **802**. A first end **803** of the connector **802** may be configured for coupling or insertion into a bare end of the extension tube, and in some examples, may comprise one or more tapered structures **810**, flanges **812** and/or barbs to facilitate coupling and/or to resist decoupling. A second end **804** of the connector **802** may be configured to connect to the complementary connector **805** of the suction apparatus **101**. In other embodiments, a connector is not required and the bare end or cut end of the extension tube may be directly coupled to the suction apparatus **101**. In still other examples, both ends of the extension tube may be pre-attached with connectors and a middle section of the extension tube may be cut out and the two remaining sections can be joined together using a connector where both ends are configured to attach to bare tubing.

[0100] Although the reduced pressure therapy device depicted in FIGS. **1** to **4** comprises a suction apparatus **101** with separate "activation" and "release" actuators, in other embodiments, a single actuator with an "activation" and a "release" position may be provided. In still other embodiments, no actuators may be provided. In some of the latter embodiments, the suction apparatus may begin to generate reduced pressure once the force from the priming tool is no longer applied. In other examples, the suction apparatus may be configured with activation and/or release mechanisms that may open or close a valve from the coupling or decoupling of the extension tube. For example, the suction apparatus may comprise a slit valve which opens when the extension tube or a connector is inserted into it.

[0101] FIGS. **9**A to **9**D illustrate another embodiment of a reduced pressure therapy device **900** with a priming tool **902**. FIGS. **9**A and **9**B depict the priming tool **902** engaged in two positions: a primed position and an activated position, respectively. To initially prime the reduced pressure therapy device **900**, a user may insert and push the priming tool **902** into an opening **905** in the body **906** of the device **900**. As the priming tool **900** contacts the seal mount of the sliding seal, the sliding seal is displaced towards the distal end **908** of the device **900**, which extends the constant force springs attached to the seal mount and thus impart potential energy into the springs. In some examples, the opening **905** and/or the body **906** of the device **900** is configured to facilitate the contact or engagement of the tool **902** to the seal or seal mount. For example, the opening **908** may be configured with a complementary cross-sectional shape to the shaft **910** of the tool **902**, and/or the body **906** of the device **900** may be configured with a passageway in communication with the opening **905**, such that translational or angular displacement of the tool **902** is reduced. In some examples, the tool may also be configured to track along the edges and/or surfaces of the internal springs to facilitate contact or engagement to the seal or seal mount. For example, the shaft **910** of the tool **902** may be configured with one or more projecting edges **914**. The edges **914** may be configured to track along the edge(s) of the internal springs. The distal end of the tool **902** may be configured with a structure complementary to a structure on the seal or seal mount which may reduce the risk of decoupling between the tool **902** as force is exerted by the user and/or by the springs.

[0102] In FIG. **9**A, the priming tool **902** has pushed the sliding seal (not shown) from the proximal end **905** towards the distal end **908** of the device **900**. The device **900** and the priming tool **902** may also be configured to releasably lock the tool **902** and/or the sliding seal in its primed position. In some examples, a device **900** with a locking mechanism permits priming without requiring that the device **900** be attached to the sealant layer, or that the operator continue to exert force using the tool **902** until it is ready for activation. Any of a variety of locking structures or locking mechanisms may be provided, including but not limited to interlocking fits or resistance fits between the device **900** and the tool **902**. For example, the handle **912** of the tool **902** may be configured with a locking flange (not shown) that may engage the opening **905** of the device **900** to resist displacement of the tool **902** away or out of the body **906**. Upon rotation, the flange may be disengaged to permit passage of the flange out of the opening **905**, along with the shaft **910** of the tool **902**. In the particular embodiment depicted in FIG. **9**B, the priming tool **902** may be configured so it may be rotated between a locked and an unlocked configuration, but in other examples, a movable latch, locking pin or other interfering mechanism may be used instead of a locking flange. As shown in FIGS. **9**B and **9**C, once in the unlocked position, the tool **902** may be removed to permit activation of the device **900**, or the force of the springs or bias mechanisms may push the tool **902** out of the device **900** without requiring the user to pull the tool **902**.

[0103] In some embodiments, the reduced pressure therapy device may be configured to permit repriming of the device by re-actuating the tool. In other embodiments, the tool may be

configured to permit limited repriming of the device, or no repriming of the device. As depicted in FIGS. **9**C and **9**D, for example, the tool **902** may be configured with one or more projections **916** on the shaft **910**. When the device **900** is activated, the internal springs may begin to bias the seal back to a proximal position. In some instances, where a large volume of air exists under the sealant layer, or the device **900** is improperly connected to the sealant layer, and/or the sealant layer is improperly applied to a treatment site, air may be immediately drawn into the device **900**, such that the tool **902** quickly extends back out of the opening **905**. The projections **916** may be configured to resist further retraction of the seal by the spring, while also remaining partially inserted into the opening **905**. In some instances, this may be used by the user as an indicator to recheck the connections or sealant layer seal. After correcting or addressing the cause of an air leak, if any, the user may push the tool **902** back into the body to re-prime the seal and then to regenerate the reduced pressure. In some examples, re-priming of the device using the tool may be repeated until the desired sealant layer seal is achieved. Once achieved, the tool **902** may be separated from the body **906** of the device by exerting a pulling and/or twisting force to deform the projections **916** to allow removal of the tool **902**. The increased force required to remove the tool **902** may reduce the risk of inadvertent removal of the tool **902**. Once removed, the projections **916** may resist reinsertion of the tool **902** back into the device **900**. In some examples, limiting re-use of the device may reduce the risk of contamination that may be associated with aspiration of wound material into the device.

[0104] In some embodiments, the suction apparatus may comprise a separate or separatable collection chamber which may be coupled or contained within a housing. The housing may be configured to interface with the collection chamber and self-generate a reduced pressure level within the collection chamber. In some embodiments, the housing further comprises at least one force member that is configured to couple to the seal or seal mount located in the collection chamber. In some embodiments, a priming tool may be used to facilitate the coupling of the collection chamber and the housing and/or to prime the seal. In some embodiments, the collection chamber of the suction apparatus may be separated from the housing, disposed and a new collection chamber may be coupled to the housing. In other embodiments, the collection chamber may be separated from the housing, emptied and/or cleaned, and then re-coupled with the housing. During long-term use of the reduced pressure therapy device, the housing may also be replaced due to wear and tear of the housing or the force member(s).

[0105] FIGS. **10**A and **10**B illustrate one another embodiment of a reduced pressure therapy device, comprising a housing **1002** and a collection chamber **1000**. The housing **1002** may comprising a housing opening **1004**, a housing cavity **1006**, and at least one force member, e.g., a pair of constant force springs **1008**, located in the housing cavity **1006**, which may be configured to coupled to a seal **1010** located in a slidable arrangement in the collection cavity **1012** of the collection chamber **1000**. The springs **1008** may access the seal **1010** through a proximal opening **1014** of the chamber **1000**. The seal **1008** may comprise a seal interface **1026** that is configured to accept either the distal end(s) of the spring(s), and/or the distal end of a priming tool. The collection cavity **1012** may comprise a flange or lip **1014** to resist separation of the seal **1010** from the cavity **1012**. In some variations, a one-way valve **1016** may be provided about the inlet **1018** of the collection cavity **1010**. In some embodiments, the springs may be configured to attach to the seal as the collection chamber is inserted into the housing. For example, the distal ends of the springs may be configured to form a threaded fit with the seal by rotating the housing with respect to the collection chamber. In other embodiments, the distal ends of the spring may be coupled to the seal using the priming tool, in addition to the use of the priming tool to prime the suction apparatus.

[0106] FIGS. **10**C to **10**D illustrate one example using the housing **1002** and collection chamber **1000** of FIGS. **10**A and **10**B. A priming tool **1020** is inserted into the housing **1002** through an opening **1022** at the proximal end **1024** of the housing **1002**. The tool **1020** may be used to push or extend the spring(s) **1008** or other bias member(s) located in the housing **1002** into an extended configuration. The collection chamber **1000** and the housing **1002** are then coupled together to engage the springs **1008** to the seal interface **1026** of seal **1010** while the springs **1008** are in the extended configuration. The engagement may be achieved by an interlocking interfit or other type of complementary interfit. With the tool **1020** still in place, the collection chamber **1000** is then further pushed into the housing **1002**, which pushes the seal **1010** into a distal position in the collection cavity **1008**, as illustrated in FIG. **10**D. The springs **1008** and the seal **1010** are then primed and may be activated by removal of the priming tool **1020**.

[0107] Once the collection chamber **1000** is filled with exudates from the damaged tissue and/or the potential energy in the springs **1008** is exhausted, the collection chamber **1000** may then be separated from the housing **1002** by decoupling the springs **1008** from the seal **1010**. In some examples, the airtight separation provided by the seal **1010** protects the housing **1002** from contamination and permits reuse of the housing **1002** with a new collection chamber. In other examples, the housing **1002** and/or the collection chamber **1000** may be reused, regardless of the sterility or contamination state.

[0108] In some embodiments the reduced pressure therapy device comprises a plurality of suction and/or collection chambers. In one embodiment, the multiple chambers may be disposed side by side, or end-to-end, or a combination thereof. In some embodiments, a suction chamber may also serve as a collection chamber. The chambers may have an elongate configuration and any of a variety of axial cross-sectional shape, including but not limited to circular shapes. The plurality of chambers may be arranged such that the average perpendicular dimension (e.g. thickness) of the device with respect to the body surface of the patient where the device is worn is smaller than either of the other orthogonal dimensions of the device (e.g. width, length or diameter). The plurality of chambers may be rigidly or flexibly coupled to each other. In some embodiments, the multiple chambers may be configured to form a generally concave surface, which may conform to a surface of the body site to which the device will be attached. In some embodiments, the concave surface substantially conforms to an arc with a radius that is between about 1 cm and about 1000 cm, sometimes between about 5 cm and about 800 cm, sometimes between 10 cm and about 500 cm, and sometimes between about 50 cm and about 250 cm. The radius of such concave surface may be selected in part on the local topology of the body site to which the tissue therapy will be attached. A multi-chamber reduced pressure

therapy device may be used to provide a low-profile device while also providing a large reduced pressure chamber volume and/or exudate handling capacity.

[0109] FIGS. **11**A and **11**B illustrate one example of the reduced pressure therapy device **1100** comprising multiple chambers **1102**, **1104** and **1106**. Although the depicted example comprises three chambers **1102**, **1104** and **1106**, in other examples, a fewer or a greater number of chambers may be provided. The chambers may or may not have the same size or shape or feature set. For example, suction chamber **1104** may comprise a viewing window **1108** and an actuating knob **1110** which is configured to actuate reduced pressure generation in all three chambers **1102**, **1104** and **1106**. In some examples, two or more chambers, or all of the chambers may be configured to be independently actuatable and/or configured identically. The number of chambers may be in the range of about two chambers to about ten chambers or more, but other examples may be in the range of about three chambers to about six chambers. As illustrated in FIG. **11**B, the suction chambers **1102**, **1104** and **1106** may be arranged to have a generally concave configuration along at least one dimension or surface of the device **1100**, but in the same or a different embodiment, at least one dimension or surface may have a generally planar configuration or a convex configuration. Alternatively, the device may have a variable configuration where at least the chambers **1102**, **1104** and **1106** are flexibly connected or articulated. As depicted in FIG. **11**B, the interconnecting structures **1112** and **1114** of the device **1100** may be sized and shaped to provide at least one generally smooth surface **1116**, which may be the surface of the device **1100** configured to be placed against the body site of a patient. In other examples, the upper surface **1118** of the device **1100** may or may not also be smooth. The example depicted in FIGS. **11**A and **11**B may further comprise at least one attachment structure or mechanism, such as a strap or belt loop **1120** to facilitate wearing of the device with a strap or band **1121**, for example, as shown in FIG. **11**F. In other examples, the device may comprise a different attachment structure such as a hook, or one or more straps or belts may be integrally formed with the device. The strap or belt may be similar to belts used with a variety of clothing, but may also be configured for attaching the device to a patient's limb or the patient's abdomen or torso. In the example shown in FIGS. **11**A to **11**F, the loop **1120** has a width that is less than the corresponding dimension of the chambers **1102**, **1104** and **1106** and is configured to accept straps or belts of similar width or less, but in other examples, the loop width may be larger than the corresponding chamber dimensions and/or may be open loops. In some further examples, the loops or other attachment mechanism may be articulated or reconfigurable so that the relative orientation of the chambers **1102**, **1104** and **1106** to the loops or attachment mechanism may be changed, e.g. rotated. The strap or belt may comprise an attachment mechanism, such as a clip, buckle or hook and loop structures, and may be elastic or inelastic. The width of strap or belt may be in the range of about 1 cm to about 40 cm or more, in some examples about 2 cm to about 30 cm, or in other examples about 5 cm to about 20 cm. The loops may comprise a rigid or a flexible material, and may have a fixed or an articulated attachment to the device.

[0110] In some embodiments that comprise multiple chambers, two or more chambers may function independently, or may be in fluid communication with each other in a parallel or serial arrangement. FIGS. **11**C and **11**D illustrate two embodiments of a reduced pressure therapy system **1150** and **1160** wherein each chamber **1102**, **1104** and **1106** has it own inlet **1122**, **1124** and **1126**, respectively. In FIG. **11**C, each inlet **1122**, **1124** and **1126** of the system **1150** may be attached to a separate connector tube **1128**, **1130** and **1132**, which are each connectable to a separate attachment ports **1134**, **1136** and **1138** of the sealant layer **1140**. In some examples, a sealant layer **1140** with multiple attachment ports or sites may be useful for treating septated or multi-cavity wounds, or treatment sites with multiple tracts. In FIG. **11**D, a branching extension tube **1142** maybe a reduced pressure therapy device **1160** and a sealant layer **1144** where the device **1150** has a different number of inlets than the number of attachment ports on the sealant layer. FIG. **11**D depicts an example of the three inlets **1120**, **1122** and **1124** of the device **1160** are connected using a branching extension tube **1142** to a single attachment port **1146** of a sealant layer **1144**. In other examples, only the reduced pressure therapy device may have a fewer number of inlets as than the number of attachment ports on the sealant layer. In still other examples, the multiple suction chambers need not be used simultaneously. As illustrated in FIG. **11**E, the suction chambers **1102**, **1104** and **1106** of the system **1170** may be used sequentially, where the connector tube **1128** is detached from an expended chamber and reattached to different chamber. Protective removable caps **1146** and **1148** may be used with the inlets **1120** and **1124** of chambers **1102** and **1106** not currently connected to a connector tube. In other embodiments, the device may comprise a multi-port valve which may be used to change the communication between an inlet and a suction chamber, so that separate inlets for each chamber are not required.

[0111] As mentioned previously, a reduced pressure therapy device comprising a plurality of chambers may have chambers with different features and/or functions, including devices with both suction chambers and collection chambers. As depicted in FIG. **12**, in some embodiments, the reduced pressure therapy device **1200** may comprise a housing **1202** and a collection chamber **1204**. The housing **1202** may comprise one or more suction chambers **1206** and **1208**. In this particular example, the housing **1200** comprises two suction chambers **1206** and **1208** which are located to each side of the housing **1202** and with a collection cavity **1210** between the suction chamber **1204** and **1206** configured to receive the collection chamber **1204**. The collection cavity **1210** may also be configured to align any openings **1212** and **1214** or channels of the collection chamber **1202** with corresponding openings **1216** and **1218** or channels of the suction chambers **1204** and **1206**. In this particular embodiment, the housing **1202** comprises a housing inlet **1220** which may be in fluid communication with a collection inlet **1222** of the collection chamber **1202** when the collection chamber **1202** is inserted into the housing **1200**. Each suction chamber **1206** and **1208** may comprise one or more force members, e.g. constant force springs **1224** and **1226** coupled to a movable seal (not shown). In use, the collection chamber **1204** is in fluid communication with the sealed wound enclosure and may be replaced or emptied when it is filled up by exudates from the damaged tissue or when the potential energy of the force members is depleted. The device **1200** may also comprise at least one smooth concave surface **1228** that is designed to conform to the contours of the body site to which the device is secured. The opposing surface **1230** of the device **1200** may or may not have a convex surface, as depicted in FIG. **12**. The device **1200** may also comprise a cap or cover **1232**, which may be

useful to protect dirt entry into the housing **1200**, and/or to secure the collection cavity **1202** to the housing **1200**. The cover **1222** and housing **1202** may or may not be configured to form an airtight seal. In other examples, the collection chamber **1204** may be configured with an integrated cap or cover. The collection chamber **1204** may be configured to be secured to the housing **1200** by a resistance interfit or a mechanical interlock, for example. In use, because the collection chamber **1202** does not contain the priming and activating mechanism, e.g., constant force springs and a priming tool, the device **1200** may be easier to replace and/or clean. Once the collection chamber **1202** is filled up with exudates, the user can replace the filled collection chamber **1220** by inserting a new chamber into the housing chamber **1210** and repeating the priming and activating steps as described elsewhere. In use, the device **1200** may be oriented so that the housing inlet **1220** is located inferiorly relative to the rest of the device **1200**. In this orientation, any exudate aspirated into the collection chamber is less likely to reach the openings **1216** and **1218** of the collection chamber **1204** and fill the suction chambers **1206** and **1208** with exudate. In some examples, filter structures may be provided in the suction chambers **1206** and **1208** and/or the collection chamber **1204** to resist or block entry of non-gaseous material into the suction chambers **1206** and **1208**.

[0112] In some embodiments, the reduce pressure therapy device **1300** may comprise a multi-position actuator, such as a slider or rotary control knob **1302**, as illustrated in FIGS. **13**A and **13**B. In some embodiments, the rotary knob **1302** may be coupled to a valve **1304** which may be configured with at least two positions: an "open" position and a "closed" position. The device **1300** may be primed by changing the knob **1302** to the "open" position which permits fluid communication through the control valve **1304** to expel any air out of the collection chamber **1306** during priming. When the knob **1302** is placed at a "closed" position, the fluid communication is blocked to resist inflow of air or other materials into the collection chamber **1306**. The device **1300** may then be attached to a sealant layer and the activated by turning the knob **1302** to permit transmission of the reduced pressure in the collection chamber **1306**. In some examples, a low-profile knob may reduce the risk or avoid an inadvertent activation and/or release of the device compared to devices comprising push buttons. As mentioned elsewhere, the knob and its associated mechanism may also be configured with additional positions or states. For example, the knob may also have a separate priming position which permits the air or gas in the chamber **1304** of the device **1300** to be expelled during the priming procedure without causing pressure buildup. In other examples, however, a continuous one-way valve may be provided to vent any pressure buildup in the collection chamber. In some other examples, the knob and/or the valve mechanism may be configured to be single-use, which may reduce the risk of re-using a non-sterile device. In still other examples, the device may be configured to be primed when the device chamber is not attached to the knob housing **1308** and therefore does not require any passageway to expel the gas. Besides changing the fluid communication, the knob mechanism may also be configured to provide release position which permits detachment of the device chamber **1304** and the knob housing **1306**.

[0113] As depicted in FIGS. **14**A and **14**B, in some embodiments, the therapy device **1400** may comprises a rack and pinion mechanism **1402** configured to charge the constant force springs **1404** and to position the sliding seal **1406**. In this depicted embodiment, the device **1400** comprises a recharging handle **1408**, providing two sets of rails **1410** with rack teeth **1412**. Two sets of pinions **1414** are mounted near the proximal end **1416** of the suction apparatus body **1418**. The number of rails and pinions in any particular example may vary, depending upon the number of springs. The pinions **1414** are coupled to the constant force springs **1404** which are connected to a sliding seal **1408**. The circular motion of the pinions **1414** will drive the motion of the springs **1404** to charge the springs **1404** with potential energy.

[0114] The rack and pinion charging mechanism **1402** may be provided in addition to or in lieu of a priming tool charging mechanism. In some examples, when an inadequate seal or connection is made and air enters the closed system, the recharging handle **1410** may be pulled away from the proximal end **1416** of the suction apparatus **1418** and then pushed back towards the proximal end **1416** to recharge the springs **1404**. In some examples, the rails and the pinions may be configured to engage in only one direction and not the other, to permit repeat manipulation of the charging mechanism **1402** to increase the magnitude of charging. A device configured with one-way movement of the rack and pinion mechanism may also permit retraction of the seal and springs without requiring that the rack and pinion handle correspondingly retract. Once the device **1400** is re-charged and the dressing seal and/or connections are rechecked, the device **1400** may be reactivated to generate a reduced pressure.

[0115] FIGS. **15**A and **15**B depict another embodiment of a reduced pressure therapy device **1500**, comprising a slidable lever **1502** that is provided on the body **1504**. The slidable lever **1502** is coupled to the sliding seal **1506** using a flexible element **1508** that is configured with sufficient column strength to push the seal **1506** when the flexible element **1508** is pushed using the lever **1502**, yet sufficiently flexible bend along the passageway containing the element **1508**. The flexible element **1508** permits the lever **1502** to move in a different direction than the seal **1506**, which may or may not permit more compact device designs. In alternate embodiments, the flexible element may be configured to pull, rather than push, the seal to a primed position using a slidable lever. In some examples, both a priming tool mechanism and the slidable lever mechanism may be provided for priming the device. As the seal **1506** moves in response to suction of air or exudates, the flexible element **1508** will in turn cause movement of the lever **1502**. In some examples, the position of the lever **1502** may be used as an indicator of the remaining potential energy in the device **1500**, and in some instances, indicia on the body **1404** near the path of the lever **1502** may be provided to indicate the remaining energy or fill capacity.

[0116] In other embodiments, the reduced pressure tissue therapy device may be configured as a portable device that may be carried by the patient or carried the patient's ambulation assistance device (e.g., wheelchair or walker). In other embodiments, the tissue therapy device is designed such that it may be secured to the patient (e.g. limb or torso). The tissue therapy device may be attached to the patient by any suitable means for securing the device to the patient known to those skilled in the art. In some embodiments, the device may be secured through the use of adhesive tape. In other embodiments, the device may be secured to the patient through the use of a strap, a hook-and-loop fasteners such as VELCRO®, an elastic band, a cuff, an adhesive bandage, or any other suitable mechanisms for securing the device. In other

embodiments, the device comprises a detachable clip. In yet other embodiments, the device further comprises a holster or other type of pocket structure to hold the suction apparatus.

[0117] As illustrated in FIG. **15**B, the reduced pressure therapy device **1500** may be kept in a pouch **1510** or other holder that can be further attached to a belt or a wrap **1512**, for example. The pouch **1510** may comprise an opening **1514** through which an extension tube **1516** of the device **1500** can extend. The pouch **1510** may also comprise a viewing opening or window **1524** which have a pouch location that corresponds to a viewing window of the device **1500**, for example. As may be seen in FIGS. **15**A and **15**B, the suction inlet **1518** need not be coaxial with the movement axis of the seal **1506**. Furthermore, the control valve **1520** of the device **1500** may also comprise a non-linear valve conduit **1522** that need not pass through the rotation axis (if any) of the valve **1520**.

[0118] In some embodiments, the tissue therapy device may be held or encased in soft or resilient materials, e.g., a dense foam. In some instances, use of foams or other soft or resilient materials may increase comfort during use, and may reduce the risk of injury to the device or the user when the device is accidentally bumped, or from pressure points that may occur with long-term use. FIGS. **16**A to **16**E illustrate one example of such a device **1600**. In some examples, the soft covering **1602** is integrally formed with the device **1600**, while in other embodiments, the device **1600** may be removable and re-encased in the soft casing **1602**. In some examples, the device **1600** and the soft casing **1602** may have different outer shapes or colors, which may permit changing of ornamentation to mask the nature of the device **1600**, which may improve patient confidence using the device in public and/or patient compliance with the device **1600**. In another example, an oval casing may be configured to engage a box-like device to eliminate any corners. Moreover, the greater surface area of such casing may reduce the risk of causing focal pressure points or regions as a result of securing the tissue therapy device directly to a user's body. To reduce potential bulkiness, the casing **1602** need not fully encase the device **1600** and may have one or more openings **1604**. Openings **1606** may also be provided to access to chamber windows or actuators of the device **1600**, or to remove a collection chamber from the device **1600**. The device **1600** may also comprise an internal frame **1608** to support components of the device **1600** such as the valve or spring posts (not shown) for example.

[0119] In one further embodiment, the encased therapy device **1600** may be configured to attach to a strap **1620** which may permit the encased device **1600** to snap into a cavity **1622** of the strap. Alternatively, zippers or other fastener mechanisms may be used to secure the device **1600** into the cavity **1622**. In some examples, a soft casing **1602** is not used or provided, and the materials about the cavity **1622**, if not at least a portion or all of the strap, comprises soft materials. The strap may comprise a closed loop of elastic material, or may comprise an open loop with a buckle, clasp or other fastening mechanism that may be used to close the loop. As depicted in FIG. **16**E, the strap **1620** may be worn in a variety of ways to secure the device to the user, including the waist or across the torso. In still other embodiments, the device is not secured against the user and may be carried as a loose shoulder strap.

[0120] FIGS. **17**A and **17**B illustrate another example of an attaching mechanism for a suction apparatus **1700**, comprising at least one elastomeric band **1702** and **1704** attached to the body **1706** of the suction apparatus **1700**. Bands of various sizes, i.e., length, width, thicknesses, cross-sectional shapes and a variety of materials can be included in the therapy device kit to suit different needs. For example, larger bands may be provided for attachment around the limbs or torso. These larger bands may be removed by the user and replaced with shorter bands provided for attachment to a belt, strap or sash. The ends **1708**, **1710**, **1712** and **1714** of the bands **1702** and **1704** may be configured to be releasably attachable to the body **1706** of the device **1700**, which may permit crossing or interlocking of the bands **1702** and **1704**, as shown in FIG. **17**B. In some instances, as illustrated in FIG. **17**B, the two elastomer bands **1702** and **1704** may be crossed over when coupled to the body **1704** of the device **1700** for use with a belt or wrap **1716** that can be worn by the user. In FIGS. **17**A and **17**B, while each end **1708**, **1710**, **1712** and **1714** of their respective bands **1702** and **1704** are be coupled to attachment sites **1722** and **1728** on the same end cap structure **1718** and **1720** of the body **1704**, in other examples, at least one band may have ends coupled to different end cap structures. The attachment sites **1722**, **1724**, **1726** and **1728** are located on the sides of the end cap structures **1718** and **1720**, but in other embodiments may be located on the end surfaces or the top or bottom surfaces of the end cap structures or the collection chamber **1730**. In some instances, it may be beneficial to use at least one band **1702** and **1704** to keep attach the end cap structures **1718** and **1720** together when the when the collecting chamber **1730** is removed from the device **1700**.

[0121] Although the bands **1702** and **1704** in the embodiment illustrated in FIGS. **17**A and **17**B have a generally elongate configuration, other configurations are also contemplated, including I-shaped, H-shaped or X-shaped bands. In some examples, a single band structure may be coupled to more than two or even all of the attachment sites. In FIG. **18**A, for example, the device **1800** comprises a H-shaped strap **1802**. In some examples, a H-shaped strap **1802** may result in less interference with the surface **1804** of the device **1800**, which may facilitate the application of adhesive labels, writing or other indicia onto the device **1800**. In some examples, this strap configuration may permit multiple ways for a belt or a wrap to pass through the strap and may provide flexibility to the user on how to wear or secure the device. Referring back to FIG. **17**, the body **1704** of device **1700** may have fewer or a greater number of attachment sites **1722**, **1724**, **1726** and **1728** than four, and not every attachment site needs to be used. In other embodiments, multiple attachment structures or openings may be provided on the band so that the cross-sectional area between the band and the body of the device can be adjusted. In still other embodiments, the attachment sites on the body of the device may be configured to slide, rotate and/or pivot. The structure of bands may be uniform or non-uniform along any dimension of the bands, e.g. a band may have a greater width in a central segment of the band compared to the end segments.

[0122] In yet another embodiment of a reduced pressure therapy device **1900** in FIG. **19**A, the device **1900** comprises an attachment site with a mounting post or stud **1902** that may be coupled to slotted opening **1904** of the a clip **1906**, as shown in FIG. **19**B. Referring back to FIG. **19**A, in certain embodiments, the clip **1906** and the post **1902** are configured to permit rotation of the device **1900** with respect to the clip **1906**. The clip attachment site may be located anywhere on the body of the device. In other examples, the clip mechanism may be releasably attached to the device **1900** using any of a variety of other interfaces, including but not limited to where

the attachment site on the body of the device comprises an opening, recess or groove and the clip comprises a complementary post or other structure configured to couple to the opening, recess or groove. The clip may have any of a variety of lengths or widths, and in some examples, multiple clips with different configurations may be in a kit containing the device. Although the clip **1904** in FIG. **19**A is articulated with a spring biased pivot mechanism **1908**, in some the clip may have a generally fixed configuration and comprise a rigid or semi-rigid material. Also, in other embodiments, the clip structure may be integrally formed with the body of the device. In FIG. **20**, for example, the reduced pressure therapy device **1920** comprises an integrally formed, unarticulated clip **1922** that is attached to one of the end caps **1924** of the device **1920**. The distal end **1926** of the clip **1922** may have an increased thickness, which may resist inadvertent separation of the clip **1922** from the belt or strap to which it may be clipped.

[0123] Referring back to FIG. **17**A, in some examples, the device **1700** may comprise a priming tool **1740** with a locking actuator **1742**. The actuator **1742** may be configured deform or displace a locking structure of the tool **1740** or to otherwise unlock the tool **1740** to permit its movement. The unlocked movement may include axial and/or rotational displacement. The locking actuator **1742** may be configured to resist, for example, inadvertent activation of the device **1700** or withdrawal of the priming tool **1740**.

[0124] In some embodiments, the suction apparatus may comprise a window or viewing region which permits visual assessment of the pressure level and/or the exudates without removal or opening of the device. FIG. **21**A illustrates one example of a non-circular suction device **2000** comprising a longitudinally oriented window **2002** located on a surface **2004** of the device **2000**. The non-circular seal may be viewable through the window **2002** and the seal may comprise seal indicia which may be viewed with respect to body indicia or window indicia **2010** to assess the position of the seal and/or the remaining amount of potential energy remaining in the device **2000**. An exudate volume scale or set of indicia may also be provided about the window. In some examples, by tilting the device and utilizing gravity, the amount of exudate contained in the device **2000** may be assessed using the volume scale. In some further examples, more than one window region may be provided. Referring still to the device **2000** in FIG. **21**A, a proximal window **2012** may be provided along a different circumferential region from the first window **2002** with respect to the longitudinal movement axis of the seal **2006**. When the seal **2006** is in a proximal region, indicia or a different surface of the seal **2006** not visible when the seal **2006** is distal to the proximal region may be visible at the proximal window **2012**, and may be used to indicate that the potential energy in the device **2000** has been depleted, that the device has not been charged, and/or that the device has failed. In other examples, a distal window (not shown) may also be provided to indicate that the device has been primed. The region of the seal configured to be visible at the distal window may or may not be circumferentially aligned with the proximal window of the device (if any). In some examples, the proximal window and/or the distal window has a dimension as measured along the movement axis of the seal that is less than the dimension of the seal along the movement axis if the seal. In some specific examples, the dimension of the proximal and distal window as measured along the movement axis is 50% or less than the dimension of the seal along the movement axis if the seal.

[0125] Although the window(s) of the reduced pressure therapy device may be circular, ovoid, square, rectangular or otherwise polygonal (with sharp angles or rounded angles), and each window may be limited to one surface of the device, in other examples, the windows may have any of a variety of shapes and may span two or more surfaces of the device. In FIG. **21**B, for example, the device **2020** comprises a window **2022** with a longitudinal region **2024** that is contiguous with a transverse proximal region **2026** and a transverse distal region **2028**. As illustrated in FIG. **21**B, the proximal and distal regions **2026** and **2028** may be configured to span a superior surface **2030** of the device **2020** as well as the side surfaces **2032** and **2034**. The longitudinally configured portions of the windows need not have a uniform width, and the proximal and distal regions of the window (if any) need not have the same configuration. FIG. **21**C, for example, depicts a device **2040** comprising a window **2042** with a longitudinal region **2044** that tapers distally and also comprises a proximal region **2046** but not a distal region.

[0126] In some embodiments, a method of applying reduced pressure therapy to an area of damaged tissue is provided, comprising: affixing a sealant layer around an area of tissue to be treated; creating a sealed enclosure around the area of the tissue with the sealant layer; priming a suction apparatus by positioning a reciprocating member contained in the suction apparatus to an extended position where the effective collecting volume of the suction apparatus is about zero; creating a fluid communication between the sealed enclosure and the suction apparatus; and activating the suction apparatus by drawing back the reciprocating member to a retracted position thereby forcefully expanding the volume of the air originally located within the sealed wound enclosure and generating a reduced pressure level within the sealed enclosure.

[0127] Another embodiment of a suction apparatus **2200** is illustrated in FIGS. **22**, **23**A and **23**B. Suction apparatus **2200** comprises a suction chamber **2210** having a distal end **2212** and a proximal end **2214**, a front cap **2220** and a rear cap **2230**. The front cap **2220** and the rear cap **2230** may be configured to be detachably secured to the distal end **2212** and the proximal end **2214** of the suction chamber **2210**, respectively. The proximal end **2212** and/or the distal end **2214** of the suction chamber **2210** may also comprise notches **2360** and **2370**, respectively, which may be configured to facilitate coupling to the rear cap **2230** and/or front cap **2220** of the device **2200**, respectively. Notches **2372** or apertures may also be provided for attaching the spring assembly **2270** to the suction chamber **2210**. A fitting housing **2240** may be coupled to the front cap **2220**, enclosing a fitting **2242** that may be configured to connect the suction chamber **2210** with another component of the therapy system (e.g., an extension tube or an attachment port on a sealant layer). The suction chamber may be fabricated from a rigid polymer adapted to maintain the external shape of the suction chamber shape under reduced pressure. In some embodiments, the entire body of the suction chamber may be transparent, thereby permitting visual inspection the quantity and quality of wound exudates contained therein. In other embodiments, the suction chamber may comprise a non-transparent body but with an inspection window.

[0128] As mentioned above, the fitting housing **2240** may be configured to removably detach from to the front cap **2220**,

while in other examples, the fitting housing may be integrally formed with the front cap **2220** or otherwise configured not to be detached once joined. A piston assembly may be movably located within the suction chamber **2210**. The piston assembly **2260** may be coupled to a spring assembly secured to the rear cap **2230** of the suction apparatus **2200**. In other embodiments, the spring assembly **2270** may also be secured about the proximal opening **2216** of the suction chamber **2210**. An opening **2232** may be provided in the rear cap **2230** to permit insertion of a priming tool **2290** which is configured to prime the suction apparatus **2200**. Once the suction apparatus **2200** is primed and activated, the priming tool **2290** may be removed, and the opening **2232** on the rear cap **2230** may be closed by a rear cap seal **2280**. The rear cap seal **2280** may be any type of seal that may prevent entry of undesired contaminants or other environmental agents (e.g. water during showering) into the suction chamber **2210**. In other examples, the rear cap seal may be attached to the rear cap by a tether. In still other examples, the rear cap seal may be configured with a passageway or slit and comprises a deformable material that permits insertion and/or removal of the priming tool and reseals upon removal of the priming tool. In the latter embodiments, the rear cap seal need not be removed before priming or inserted back into the opening after removal of the priming tool.

[0129] FIG. **24**A is a perspective view of the embodiment of the suction apparatus **2200** in a configuration before priming and comprising a collection chamber **2210** made of a translucent or optically clear material, with the piston assembly **2260** in a proximal position and the priming tool **2290** inserted into the opening **2232** of the rear cap **2230** but not yet displacing the piston assembly **2260**. To prime the suction apparatus **2200**, the priming tool **2290** may by further inserted through the opening **2232** of the rear cap **2230** to push the piston assembly **2260** into the suction chamber **2210**. Depending upon the particular configuration, the priming tool may be pushed until the piston assembly contacts the distal end wall until it is adjacent the distal end wall of the suction chamber, until the springs are maximally extended, and/or mechanical interference between the priming tool and the rear cap resist further insertion. FIG. **24**B depicts the suction apparatus **2200** in the primed configuration. The priming tool **2290** has pushed the piston assembly **2260** into a distal position and has extended the springs **2300** coupling the piston assembly **2260** to the spring assembly **2270** and generated potential energy within the springs **2300**. Upon removal of the priming tool **2290**, the springs **2300** are able to exert a proximal directed force onto the piston assembly **2260**, which is capable of generating reduced pressure in the suction chamber **2210** and transmitting the reduced pressure to a sealed wound enclosure coupled to the device **2200**. FIGS. **24**C and **24**D are superior and side elevational views of the device from FIG. **24**A in an activated state and with the springs **2300** having partially expended the potential energy from the fully primed configuration. As can be seen when the piston assembly **2260** is in a partially expended position, the suction chamber **2210** may be subdivided by the piston assembly **2260** into a collection chamber **2262** and a working chamber **2264**, where the collection chamber **2262** is the space between the piston assembly **2260** and the distal end wall **2213** of the suction chamber **2210**, and the working chamber **2264** is the space between the proximal end **2214** of the suction chamber **2210** and the piston assembly **2260** which contain the springs **2300**. When the suction apparatus is in the primed configuration, the volume of the collection chamber may be about zero, or sometimes less than about 5 cc. In some instances, upon activation of the primed device, the collection chamber may increase in volume up to about 3%, sometimes about 5% and other times about 10% or even about 20% until the force exerted by the springs **2300** is counterbalanced by the force generated by the reduced pressure in the collection chamber **2310**.

[0130] FIG. **25**A provides a detailed superior view of the suction chamber **2210** and FIG. **25**B provides a cross-sectional view of the distal portion of the suction chamber **2210** from FIG. **25**A. As may be seen in the perspective views in FIGS. **22** to **24**B, the suction chamber **2210**, may comprise a non-circular cross-sectional shape with respect to a transverse plane to the movement axis of the piston assembly, which in some configurations lies between the distal end **2212** and proximal end **2214** of the suction chamber **2210**. In other examples, the cross-sectional shape of the suction chamber may have any of a variety of other types of geometric configurations (e.g., cylindrical, rectangular, etc.). As mentioned previously, the distal end wall **2213** of the suction chamber **2210** may further comprise a distal opening to permit communication with the suction chamber. The distal end wall **2213** of the suction chamber **2210** may further comprise a conduit **2330** or other extension structure. The conduit **2330** comprises a conduit lumen **2340** with a conduit opening **2342** which are in fluid communication with the collection chamber **2310** of the suction chamber via the distal opening **2215** of the distal end wall **2213**. The conduit **2330** may comprise any of a variety of notches **2350**, grooves or flanges, which may facilitate attachment of the conduit **2330** to one or more components associated with the fitting housing **2240**.

[0131] Although a user-controlled valve may be provided in some embodiments to open or close fluid communication with the suction chamber, in some examples, the fluid communication may be controlled automatically by the coupling and/or decoupling of the device components. For example, the conduit **2330** of the device **2200** may also comprise an inner conduit **2380** located in the main conduit lumen **2340**, the inner conduit **2380** comprising an inner conduit lumen **2382** and an inner conduit opening **2384**. Referring to FIG. **25**B, a chamber slit seal **2390** may be located about the inner conduit opening **2384**. In its base configuration, the chamber slit seal **2390** may be configured with a normally closed configuration to block fluid communication through the conduit **2330**. In some examples, a chamber slit seal **2390** may be opened by inserting a structure through the seal to deform it and maintain the patency of the opening formed in the seal. As will be explained in greater detail below, in other examples, such as the slit seal **2390** in FIG. **25**B, the slit seal **2390** may be configured to be pushed over, around, and/or down toward the base of the inner conduit **2380** when a complementary structure is inserted into the main conduit lumen **2340**.

[0132] FIG. **26**A is a top component view of a fitting assembly **2600**, comprising the fitting housing **2240**, a fitting **2242** and a fitting slit seal **2602**. As mentioned previously, the fitting housing **2240** may be configured to permanently or detachably couple to the front cap **2220** of the device **2200**, or may be integrally formed with the front cap. In the embodiment shown in FIG. **26**A, fitting **2610** comprises a connector section **2604** that is accessible through an opening **2606** in the fitting housing **2240** and permits a complementary fit with the connector of another component. For example, connector section **2604** may be coupled to a connector of an extension

tube or the attachment port of a sealing layer with a snap fit or an interference fit. In the specific example in FIG. **26**A, the connector section **2604** comprises multiple flanges **2608** which may be used to provide a resistance fit with tubing, but may also be used with a complementary connector to form a complementary interfit.

[0133] Referring to FIGS. **26**A and **26**B, the fitting **2242** may also comprise a chamber connector **2610** with a fitting slit seal **2602**. When the device is assembles, the chamber connector **2610** may be located within the front cap **2220** of the device **2200**, but the particular location may vary with the particular embodiment. The fitting slit seal **2602** may comprise a distal ring **2612** with an inner profile configured to engage a groove **2614** on the chamber connector **2610** of the fitting **2242**. The outer profile of the seal **2602** and/or the distal ring **2612** may be configured to seal against the inner surface main conduit lumen **2340**. The fitting slit seal **2602** may also comprise a slit that provides a deformable passageway through the seal **2602**. Thus, in some embodiments, the fitting slit seal **2602** may be configured to both form an airtight seal between the chamber connector **2610** and the conduit lumen **2340** of the suction chamber **2210** and also to control fluid communication through the fitting assembly **2600**. FIG. **26**B illustrates a side cross sectional view of fitting **2610** coupled to the fitting slit seal **2612** at the fitting's proximal end.

[0134] Referring back to FIG. **26**A, fitting assembly **2600** may also comprise an interlocking structure that comprises at least one resilient tab **2616** that is disposed on and project outwardly from a base member **2618** coupled or integrally formed with the fitting **2242**. When the fitting assembly **2600** is coupled to the suction chamber **2210**, the tabs **2616** are configured to engage complementary recesses (**2350** in FIGS. **25**A and **25**B) on the conduit **2330** of the suction chamber **2210**. An interlocking mechanism may resist or prevents inadvertent decoupling of the fitting **2242** from the suction chamber **2210**. The fitting housing **2240** may further comprise one or more release structures or buttons **2622** that are coupled to or interface with the levers **2624** of the projecting tabs **2618**. Depressing the buttons **2622** will release the interlocking mechanism by displacing the tabs **2616** from the notches **2350** on the suction chamber **2210** and permit decoupling of the fitting **2242** and fitting housing **2240** from the front cap **2220** and the suction chamber conduit **2330**. The release buttons **2622** may comprise one or more textured gripping surfaces **2626** that may facilitate manual connection or disconnection of the fitting **2242**.

[0135] FIG. **27**A is a schematic superior cut-away view of the suction chamber **2210** and the fitting **2242** of the fitting assembly **2600** when the fitting **2242** is fully inserted into the conduit **2330**. As illustrated, the tabs **2616** projecting from the base member **2618** of the fitting **2242** form an interfit with the notches **2350** on the surface of the suction chamber conduit **2330**. FIGS. **27**B and **27**C are side cross sectional views of a portion of the suction chamber **2210** and the fitting **2242**, before and after the fitting **2242** has been fully seated into the conduit **2330**. FIGS. **27**B and **27**C further illustrate the connecting mechanism between chamber slit seal **2390** on the inner conduit **2380** and fitting slit seal **2602** of the fitting **2242**. In FIG. **27**B, when fitting **2242** is inserted into the conduit **2330**, the fitting slit seal **2602** initially contacts chamber slit seal **2390**, which is mounted on a seal base **2392**. As illustrated in FIG. **27**C, further insertion causes the edge **2628** of the chamber connector **2610** to exert a force along the perimeter **2660** of the chamber slit seal **2390**. An inner gap **2632** and/or an outer gap **2634** about the chamber slit seal **2390** provide space for the chamber slit seal **2390** to deform or compress away from the edge **2628** of the chamber connector **2610**. This results in the enlargement of the opening or slit **2636** of the chamber slit seal **2390** as it is pushed proximally away from the inner conduit opening **2384**. In some examples, the inner and outer gaps **2632** **2634** may also reduce the frictional resistance of the chamber slit seal **2390** against the inner conduit **2380** or the surface of the conduit lumen **2340**, respectively. As the fitting **2242** is further inserted into the conduit lumen **2340**, the exposed inner conduit **2380** penetrates through the slit **2603** of the fitting slit seal **2602**, thereby opening fluid communication from the suction chamber **2210**, through the distal opening **2215** of the suction chamber **2210**, through the inner conduit **2380** and through the fitting **2242**. In the embodiment depicted in FIGS. **27**A to **27**C, the tabs **2616** and the notches **2350** of the locking mechanism may be used to provide rotational alignment of the between the fitting slit seal **2602** and the chamber slit seal **2390**, if needed. This may be useful where the slits of the seals **2602** and **2390** are single linear slits. In other configurations where the slits are multiple radial slits, rotational alignment may or may not affect the patency of the fluid communication.

[0136] When fitting **2242** is decoupled from the suction chamber conduit **2330**, of the withdrawal of the inner conduit **2380** from the fitting slit seal **2602** results in closure of the fluid passageways to the sealed wound and may limit air entry into the wound during decoupling. As the fitting **2242** is further separated, the edge **2628** of the chamber connector **2610** is withdrawn and the chamber slit seal **2380** is able to elastically revert back to a closed position to seal the suction chamber **2210**. In some embodiments, chamber slit seal **2380** is able to elastically revert back to a closed position with the aid of a coaxially mounted coil spring. Although both seals **2602** and **2390** are closed, the outer surface of the fitting slit seal **2602** continues to form a seal with the conduit lumen **2340** until further separation occurs. As may be seen in FIGS. **2527**B and **27**C, the conduit lumen **2340** of suction chamber **2210** has a non-uniform diameter along it longitudinal length, and may comprise a proximal segment **2638** having a reduced diameter relative to the distal segment **2640**. The transition in diameter between the proximal and distal segments **2638** and **2640** may be gradual or stepped. The conduit lumen **2340**, for example, comprises at least one step transition region **2642** between the segments **2638** and **2640**. In some examples, step transition region may provide different tactile feedback compared to gradual transitions.

[0137] The slit seal may be fluid impervious and may be fabricated from any of suitable resilient materials, such as, but not limited to, synthetic elastomer, silicone rubber, or natural rubber. The seal material may be compatible with wound exudates that may be collected by the suction chamber during a reduced pressure treatment. The seal material may be sterilized by treatment of radiation, steam, ethylene oxide or other suitable techniques known to those skilled in the art.

[0138] Turning to FIGS. **28**A and **28**B now, the spring assembly **2270**, which is mounted at the proximal end of the suction chamber and covered by the chamber rear cap, comprises a spring carrier **2820** and a U-shaped spring retainer **2810** containing two bushings **2830** mounted on the two vertical rails **2812** of the spring retainer **2810**. Two substantially constant force springs (not shown in this figure) may each comprise a coiled body coupled to and wrapped around

bushing **2830** and a free end distally extended and attached to the piston assembly. The springs may or may not be constant force springs. The spring attachment mechanism will be discussed in greater detail below. The spring carrier **2820** comprises a central opening **2824** and two side openings **2826**. The central opening **2824** is configured to permit passage of the priming tool to access and displace the piston assembly. The side openings **2826** are configured to house the bushings **2830** and the springs when the spring retainer **2810** is coupled to the spring carrier **2820**. As shown in this figure, multiple ridges **2821** may be located adjacent the side openings **2826** to limit the movement of the bushings **2830** and springs coiled around bushings **2830**, thereby reducing deflections or deformations of the springs during operation of the suction apparatus. The spring carrier **2820** may also comprise resilient tabs **2822** that may slidably engage one or more grooves on the priming tool shaft, which may reduce angular deviations of the priming tool with respect to the longitudinal movement axis of the seal. The spring carrier **2820** may also comprises two interlocking structures **2823** configured to releasably lock the priming tool in place after the suction apparatus is primed. The interlocking mechanism will be described in detail later. Fixation structures **2828** may be provided to form a snapfit or other type of interfit with complementary structures on the suction chamber.

[0139] FIGS. **29**A and **29**B are component views of the piston assembly **2260** that comprises a piston seal **2910** and a piston **2920**. The piston assembly **2260** may be configured to traverse between the distal end and the proximal end of the suction chamber while maintaining a substantially airtight seal. As mentioned previously, the piston assembly **2260** provides an airtight separation the suction chamber between a collection chamber and a working chamber. In the depicted embodiment, the piston seal **2910** has a non-circular, elliptical cross-sectional shape with respect to its movement axis in the suction chamber, but in other embodiments, other shapes as described herein may be used. The piston seal **2910** may comprise a side wall **2911** and a distal end wall **2912**. The side wall **2911** of the piston seal **2910** further comprises a distal perimeter ridge **2914** and a proximal perimeter ridge **2916**, the dimensions of which may be larger than that of the side wall **2911** of piston seal **2910**. The ridges **2914** and **2916** may be configured to be in a sliding contact with the interior surface of the suction chamber. They may provide a sealed contact while limiting sliding friction. The exterior surfaces of the piston seal and/or the interior surfaces of the suction chamber may comprise a friction-reducing lubricant or a lubricious coating material.

[0140] The piston seal **2910** may be detachably coupled to the piston **2920** or in some embodiments, the piston seal **2910** and the piston **2910** may be integrally formed. In the depicted embodiment, the piston **2920** may comprise an elliptical frame with a side wall **2924**. The distal portion of side wall **2920** may comprise a recess **2926** and a raised edge or flange **2928** configured form a complementary interfit with the piston seal **2910**. The proximal perimeter edge **2930** of side wall **2922** may have a complementary shape to the distal edge **2829** of the spring carrier **2820**. In the depicted embodiment, both the proximal edge **2930** of the piston side wall **2922** and the distal perimeter edge **2829** of the spring carrier have a curved, non-planar configuration. As mentioned previously, the seal and/or seal mount (e.g. piston **2920**) may have a variable longitudinal length along its perimeter. In some instances, an increased longitudinal dimension may provide additional stability to the seal along a dimension of the seal. In some examples, the side length along a section of the perimeter of the piston **2920** may be related to the transverse dimension intersecting a) that side length of the perimeter and b) the central movement axis of the seal and/or piston. In the example in FIG. **29**A, the lateral longitudinal surface of the piston **2920** may have a longitudinal length **2932**, based upon the increased width **2934** of the piston **2920** relative to the height **2936** of the suction chamber **2210** (corresponding to the increased width and reduced height of the suction chamber **2210**). In comparison, the superior longitudinal surface of the piston **2920** may have a longitudinal length **2938** that is smaller than the longitudinal length **2932** of the lateral longitudinal surface from the reduced height **2936** of the piston **2920**.

[0141] Referring to FIGS. **29**A, **29**B and **30**, the piston **2920** may also comprise a central opening **2940** which may be aligned with the central opening **2824** of spring carrier **2820**. The piston central opening **2940** may be configured to provide passage of the distal ends of the constant force springs. FIG. **29**C provides a frontal elevational view of the piston **2920**. The distal regions **2952** of the constant force springs **2950** (depicted only in FIG. **30**) may extend through the central opening **2940** and are coupled to a pair of spring retaining structures **2930** disposed on the front surface of piston **2920**. In this particular embodiment, the retaining structures **2930** are configured to be inserted into apertures provided on the springs and may or may not maintain their coupling using residual spring force that may be present in the springs in the retracted configuration. The retaining structure and the springs may have any of a variety of other coupling configurations, however (e.g. the retaining structures may comprise posts which block displacement of T-shaped spring ends). Between the central opening **2940** and the retaining structures **2942** are curved support surfaces **2944** which are configured to push against the springs. In some examples, the length of the curved support surfaces **2944** between the central opening **2940** and the retaining structures **2930** may be at least one or one and a half times the width of the springs, while in other examples may be two or three times or four times the width of the springs. In some examples, the curved support surfaces **2944** provide a substantial surface area to distribute the pushing forces and may reduce the risk of damage to the springs. Referring back to FIG. **29**A, the piston **2920** may further comprise convex supports **2946** adjacent to the central opening **2940**, which may also support the springs as the springs converge into the central opening **2940**. The convex supports **2946** may have a curved length of at least about the width of the springs, but in other examples may be at least two or three times the width of the springs. Referring to FIGS. **29**A and **30**, the convex supports **2926** may also comprise a concave region **2948**, which may accommodate the coils of the spring and the spring carriers **2830** when the piston assembly **2260** is in a retracted configuration. Although the piston assembly **2260** and the spring assembly **2270** depicted in FIGS. **28**A to **29**B utilized two springs, in other examples, one spring, three springs, four springs, or five or more springs may be used. The number of springs, the type of springs, and the width and length of the springs may be varied, and in other examples, non-spring bias members may be used (e.g. sealed pneumatic shocks).

[0142] FIGS. **31**A to **31**C schematically illustrate one example of a priming procedure of the suction apparatus **2200** with a priming tool **2290** from FIGS. **23**A and **23**B, where the

springs have not been shown to better illustrate the interactions between the piston assembly **2260**, spring assembly **2270** and the priming tool **2290**. The priming tool **2290** comprises a tool shaft **3100** with a distal recess **3110** and a proximal recess **3120** on each side of the shaft **3100**. Located between the recesses **3110** and **3120** is a non-recessed portion of the shaft **3100**. The distal end **3130** of the priming tool **2290** is has a cross sectional shape and size that is able to pass through the central opening **2824** of the spring assembly **2270** to contact the piston **2920** of the piston assembly **2260**. During the priming procedure, the priming tool **2290** may be pushed against the piston **2920** but is not configured to couple or attach to the piston **2920**. In other embodiments, however, the distal end **3130** of the priming tool **2290** and the piston **2920** may be configured to form a complementary interlocking fit or interference fit. Before priming, the springs will pull and maintain the piston assembly **2260** into a proximal or retracted position against the spring assembly **2270**. As the priming tool **2290** is inserted into the suction apparatus, the resilient tabs **2822** on the spring assembly **2270** will slidably engage the distal recess **3110** on the tool shaft **3100**. As the priming tool **2290** is further inserted, the user may receive tactile feedback of increased resistance as the tabs **2822** are resiliently displaced out of the distal recesses **3110**. Further insertion may provide additional tactile feedback from increased frictional resistance by the tabs **2822** against the non-recessed portion **3112** of the shaft **3100**. As the priming tool **2290** is further inserted, the piston assembly **2260** is separated from the spring assembly **2270** and the constant force springs or bias members attaching the assemblies **2260** and **2270** will elongate and generate potential energy. As piston assembly **2260** is further displaced distally, the tabs **2822** will then engage the proximal recess **3120** on the prime tool shaft **3100**. The position and length of the of the non-recessed portion **3112** and the recesses **3110** and **3120** of the shaft **3100** may be configured to provide the user with tactile feedback indication, or may be provided to resist ejection of the priming tool **2290** out of the suction apparatus. For example, if the wound or fluid communication to the wound is incompletely sealed, or if there is an excessive volume of air or exudates the wound, upon activation of the suction apparatus, the piston assembly **2260** may retract suddenly. The non-recessed portion **3112** of the priming tool **2290** may provide at least partial retention of the tool **2290** so that the user can reprime the suction apparatus. The recesses **3110** and **3120** may be configured with ramped proximal and distal surfaces movement of the tabs **2822** in and out of the recesses **3110** and **3120**.

[0143] Upon full priming of the suction apparatus, latches **3140** located on the prime tool shaft **3110** may engage the interlocking structures **2823** on the spring assembly **2270** to locks the priming tool **2290** into place, as depicted in FIG. **31**C. The priming tool **2290** may be left in the locked configuration in the suction apparatus, and may even be stored and/or distributed in a primed poison. The locking mechanism also permits the suction apparatus to be primed without requiring that the suction apparatus be already coupled to the sealant layer. Thus, the user need not be concerned about uncoupling the suction apparatus or unsealing the sealant layer during the priming procedure, and may handle or orient the suction apparatus in any manner, e.g. abutting the connector surface of the suction apparatus against a table or wall to provide leverage when pushing the priming tool.

[0144] To activate the primed suction apparatus, the user may depress the release buttons **3150** located at the proximal end of the prime tool **2290**. Pressing the release buttons **3150** disengage the latches disengages latches **3140** from the interlocking structures **2823**, thereby permitting the removal of the priming tool **2290** out of the suction chamber. The release buttons **3150** may also comprise one or more textured gripping structures or materials to facilitate latch release. Although the embodiment depicts in FIGS. **31**A to **31**C comprises a priming tool **2290** with two latches **3140** and two release buttons **3150**, in other embodiments, a different number latches and/or buttons may be provided, or a different configuration of a locking mechanism may be provided (e.g. a locking pin that may be inserted and removed by the user).

[0145] As described previously, once the priming tool **2290** is proximally withdrawn, the piston assembly will be retracted by the charged constant force springs. Such movement will expand the combined volume of the space below the piston assembly and the sealed wound enclosure, and reduce the pressure level therein. Where there has been an inadvertent leak in the system or excessive air or exudates in the wound, the priming tool **2290** may be used to reprime the device. In these embodiments, the method for using the suction apparatus may further comprise resealing the wound and/or reseating one or more connectors of the reduced pressure therapy device, and repositioning the slidable seal or piston assembly to the extended or primed position and reactivating the device.

[0146] In some embodiments, the method of treating an area of damaged tissue may comprise affixing a sealant layer around an area of tissue to be treated; creating a sealed enclosure around the area of the tissue with the sealant layer, inserting a collection chamber into a housing chamber and priming the collection chamber; creating a fluid communication between the collection chamber and the sealed wound enclosure; activating the collection chamber to create a reduced pressure level within the sealed wound enclosure; if the collection chamber is filled up with wound exudates, terminating the fluid communication between the collection chamber and the wound seal and releasing the collection chamber from the wound site; withdrawing the collection chamber from the housing chamber and replacing it with a new collection chamber; and repeating the steps as appropriate to continue a reduced pressure treatment.

[0147] Although the embodiments herein have been described in relation to certain examples, various additional embodiments and alterations to the described examples are contemplated within the scope of the invention. Thus, no part of the foregoing description should be interpreted to limit the scope of the invention as set forth in the following claims. For all of the embodiments described above, the steps of the methods need not be performed sequentially. Accordingly, it is not intended that the invention be limited, except as by the appended claims.

What is claimed:

1. A system for treatment of a patient, comprising:

a. a sealable wound covering comprising a sealant layer and a flexible attachment port configured with a lumen that passes through the sealant layer;

b. a reduced pressure generating assembly, comprising:

i. a removable suction chamber with a longitudinal axis and a non-circular cross-sectional shape transverse to the longitudinal axis and a volume of 150 cc or less;

ii. a piston assembly configured to slide in the suction chamber along the longitudinal axis and having a non-circular cross-sectional shape transverse to the longitudinal axis and a non-planar proximal perimeter;

iii. at least two substantially constant force spring coils coupled to the piston assembly and configured to reduce pressure in the suction chamber by at least 50 mmHg;

iv. a priming tool configured to push the piston assembly and comprising a locking mechanism and

v. a connector tube configured to releasably attach to the sealable wound covering and to releasably attach to the removable suction chamber.

2. A system for treatment of a patient, comprising:

a. a sealable wound covering comprising a sealant layer and a flexible attachment port configured with a lumen that passes through the sealant layer;

b. a non-electrically powered reduced pressure generating assembly configured to couple to the attachment port and comprising a suction chamber with a non-circular cross-sectional shape.

3. The system of claim **2**, wherein the reduced pressure generating assembly comprises at least one substantially constant force member.

4. The system of claim **2**, wherein the reduced pressure generating assembly comprises at least two substantially constant force members.

5. The system of claim **3**, wherein the reduced pressure generating assembly comprises an elongate rigid member configured to mechanically charge at least one constant force member with potential energy.

6. The system of claim **3**, wherein at least one force member is elastic.

7. The system of claim **6**, wherein at least one elastic force member is a constant force spring.

8. The system of claim **3**, wherein the reduced pressure generating assembly further comprises a seal assembly configured to slide in the suction chamber along a movement axis.

9. The system of claim **2**, wherein the reduced pressure generating assembly comprises at least one ribbon spring.

10. The system of claim **9**, wherein at least one ribbon spring is a substantially constant force ribbon spring.

11. The system of claim **8**, wherein the reduced pressure generating assembly comprises at least one variable force member.

12. The system of claim **11**, wherein at least one variable force member is configured to offset at least some friction acting on the seal assembly.

13. The system of claim **8**, wherein the reduced pressure generating assembly is configured to maintain a fixed outer dimension along the movement axis independent of suction chamber content.

14. The system of claim **8**, where the reduced pressure generating assembly has a fixed outer configuration independent of suction chamber content.

15. The system of claim **8**, wherein the non-planar proximal perimeter is a curved non-planar proximal perimeter.

16. The system of claim **2**, wherein the reduced pressure generating assembly comprises a first dimension, a second dimension perpendicular to the first dimension, and a third dimension perpendicular to the first and second dimensions, and wherein the first dimension is the largest dimension of the reduced pressure generating assembly and wherein the third dimension is no greater than about 5 cm.

17. The system of claim **16**, wherein the second dimension is greater than the third dimension.

18. The system of claim **16**, wherein the third dimension is no greater than about 4 cm.

19. The system of claim **16**, wherein the third dimension is no greater than about 3 cm.

20. The system of claim **16**, wherein the third dimension is no greater than about 2 cm.

21. The system of claim **16**, wherein the third dimension is no greater than about 1 cm.

22. The system of claim **16**, wherein the suction chamber has a volume of about 500 cc or less.

23. The system of claim **16**, wherein the suction chamber has a volume of about 250 cc or less.

24. The system of claim **16**, wherein the suction chamber has a volume of about 100 cc or less.

25. The system of claim **4**, wherein the reduced pressure generating assembly is configured to reduced pressure by at least −75 mmHg.

26. The system of claim **4**, wherein the reduced pressure generating assembly is configured to reduced pressure by at least −100 mmHg.

27. The system of claim **4**, wherein the reduced pressure generating assembly is configured to reduced pressure by at least −125 mmHg.

28. The system of claim **5**, wherein the elongate rigid member comprises a releasable locking mechanism.

29. The system of claim **28**, wherein the releasable locking mechanism comprises a latch and a release button coupled to the latch.

30. The system of claim **8**, wherein the seal assembly comprises at least one curved surface configured to push against at least one constant force member.

31. The system of claim **30**, wherein the seal assembly comprises at least one convex structure different from the at least one curved surface.

32. The system of claim **2**, wherein the suction generating assembly further comprises a valve configured to control fluid communication with the suction chamber.

33. The system of claim **32**, wherein the valve is coupled to a rotatable knob.

34. The system of claim **2**, further comprising a connector tube configured to be coupled the sealable wound covering and the suction generating assembly.

35. A tissue therapy device, comprising:

a. a sealable wound covering;

b. a wearable suction generating device configured to substantially maintain its external dimensions over a range of collection volumes and having a non-circular cross-sectional shape.

36. The device of claim **35**, wherein the reduced pressure generating device is non-electrically powered.

37. The device of claim **36**, wherein the reduced pressure generating device comprises an elastic force member.

38. The device of claim **37**, wherein the force member is a constant force spring.

39. The device of claim **38**, wherein the reduced pressure generating device is adapted to be mechanically charged with potential energy.

40. The device of claim **35**, wherein the reduced pressure generating device has a substantially non-cylindrical shape.

41. The device of claim **36**, wherein the reduced pressure generating device comprises at least two suction chambers.

42. The device of claim **41**, wherein the reduced pressure generating device comprises at least two independent suction chambers.

43. The device of claim **41**, wherein the reduced pressure generating device further comprises at one collection chamber separate from the suction chambers.

44. A device for treatment of patient comprising:

a. a sealable wound covering comprising a cover and an integrated flexible attachment port configured to swivel around a swivel axis perpendicular to the cover.

b. a non-circular reduced pressure generating apparatus wherein the suction chamber is configured to generate reduced pressure and to collect exudates and to self-maintain a substantially constant level of reduced pressure across a volume range.

45. The device of claim **44**, wherein the volume range is at least 50 cc.

46. The device of claim **44**, wherein the volume range is at least 100 cc.

47. The device of claim **44**, wherein the reduced pressure generating apparatus comprises an elastic force member.

48. The device of claim **47**, wherein the reduced pressure generating apparatus is configured to mechanically recharge the elastic force member.

49. The device of claim **44**, wherein the reduced pressure generating unit is non-electrically powered.

50. The device of claim **44**, wherein the attachment port is configured to permit fluid communication between the through the sealable wound covering and with the reduced pressure generating apparatus.

51. The device of claim **44**, wherein the reduced pressure generating apparatus is configured to maintain a constant external configuration over a range of suction chamber volumes.

52. A system for treatment of patient comprising:

a. A sealable wound covering comprising an integrated flexible attachment port configured to provide fluid communication through the wound covering and to seal around a wound to form a wound enclosure; and

b. A non-circular reduced pressure generating device wherein said device comprises an elastic force member and a rigid member configured to charge said elastic force member with potential energy.

53. The system of claim **52**, wherein the attachment port is configured to swivel substantially parallel to the sealable wound covering.

54. The system of claim **52**, wherein the elastic force member is a constant force spring.

55. The system of claim **52**, wherein the reduced pressure generating device is non-electrically powered.

56. The system of claim **54**, wherein the reduced pressure generating device is configured to maintain a substantially constant pressure level irrespective of the orientation of the reduced pressure generating device with respect to gravity.

57. The system of claim **54**, wherein the reduced pressure generating device is configured to maintain fixed external dimensions irrespective of the suctioned volume in the reduced pressure generating device.

58. A method for treating a patient comprising of the following steps:

a. detaching a non-electrically powered and non-circular reduced pressure generating device from a wound covering;

b. charging the reduced pressure generating device with potential energy without generating a reduced pressure;

c. attaching the recharged reduced pressure generating device to said wound cover;

d. activating the recharged reduced pressure generating device to generate reduced pressure in an enclosure underneath the wound covering

59. A method for treating a patient comprising:

a. sealing a wound cover to a body site;

b. reducing the pressure level at said body site using a reduced pressure generating device having an elongate length and a non-circular cross-sectional shape transverse to the elongate length, the reduced pressure generating device configured adapted to substantially maintain substantially constant reduced pressure level at said wound site without changing its external dimensions and independent of its orientation with respect the body site.

60. The method of claim **59**, further comprising sliding a non-circular seal along a movement axis in a non-circular suction chamber, wherein the seal and the suction chamber have non-circular configurations transverse to the movement axis.

* * * * *