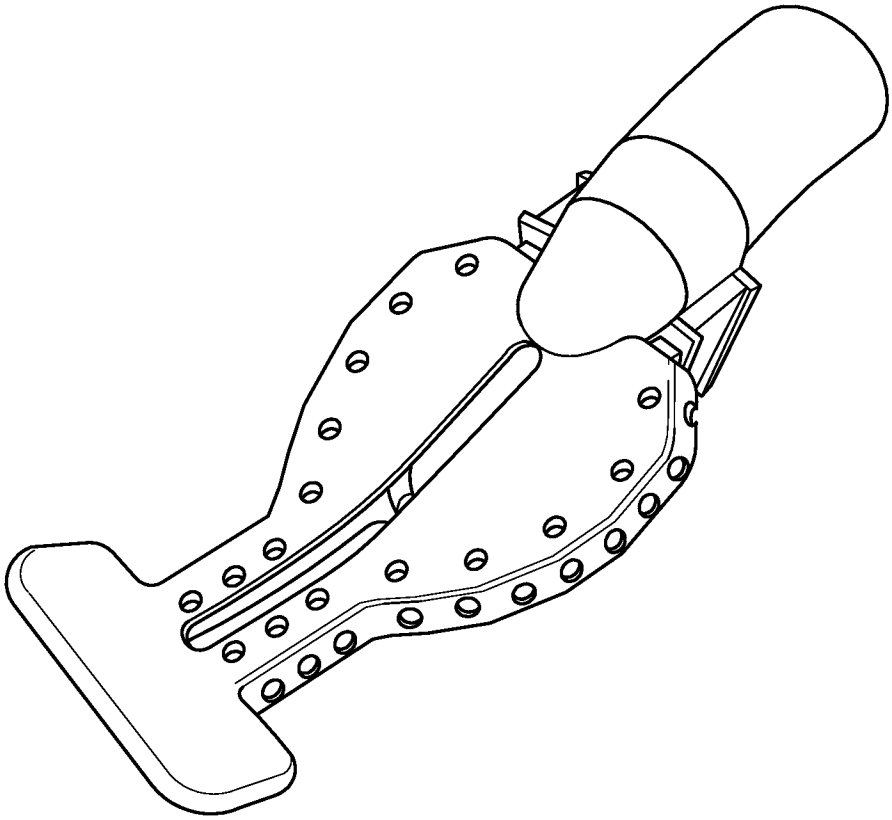

FIG. 1A

EX1015
Petitioner Ascentcare ('970 Patent)

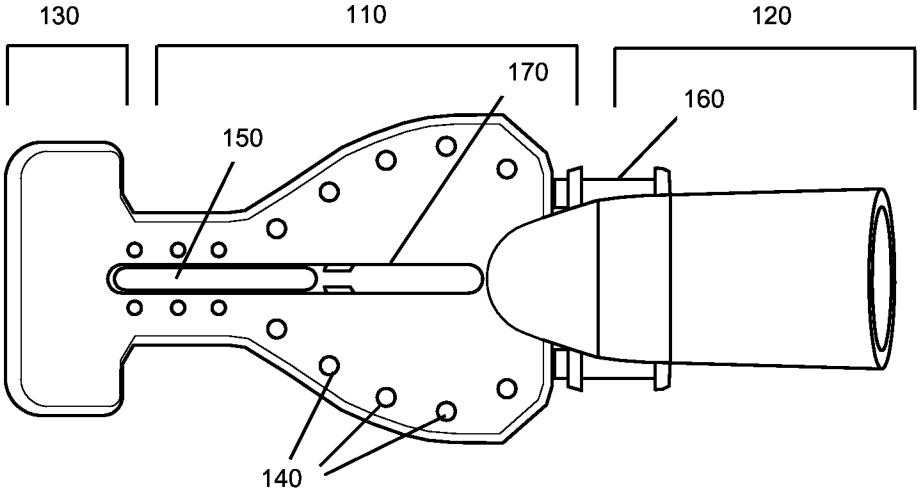

FIG. 1B

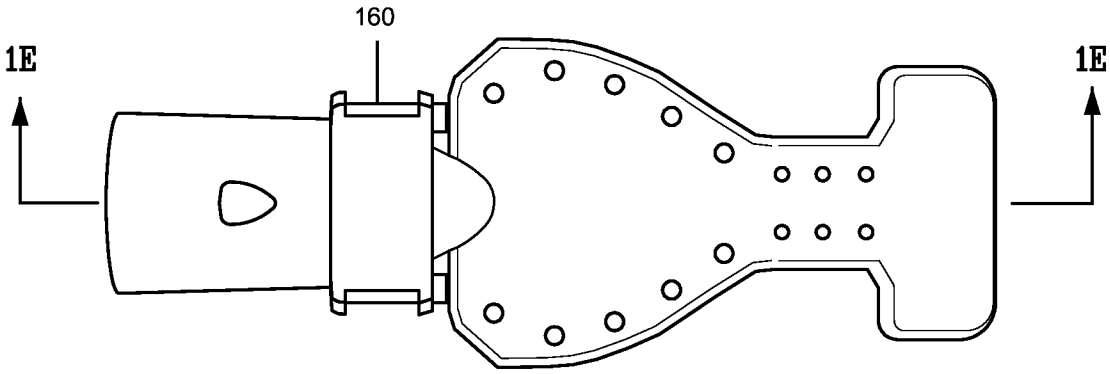

FIG. 1C

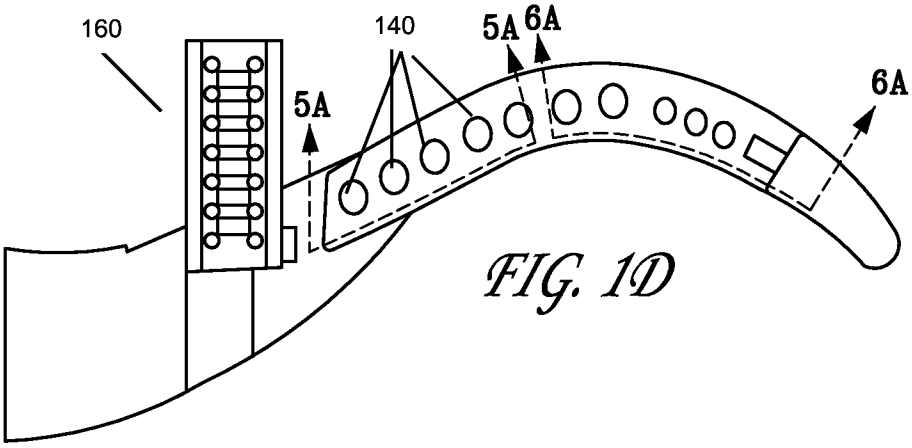

FIG. 1D

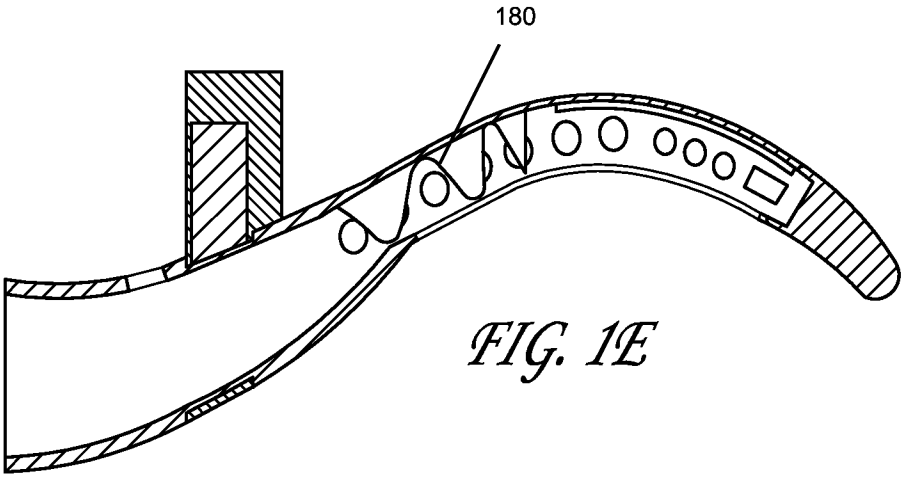

FIG. 1E

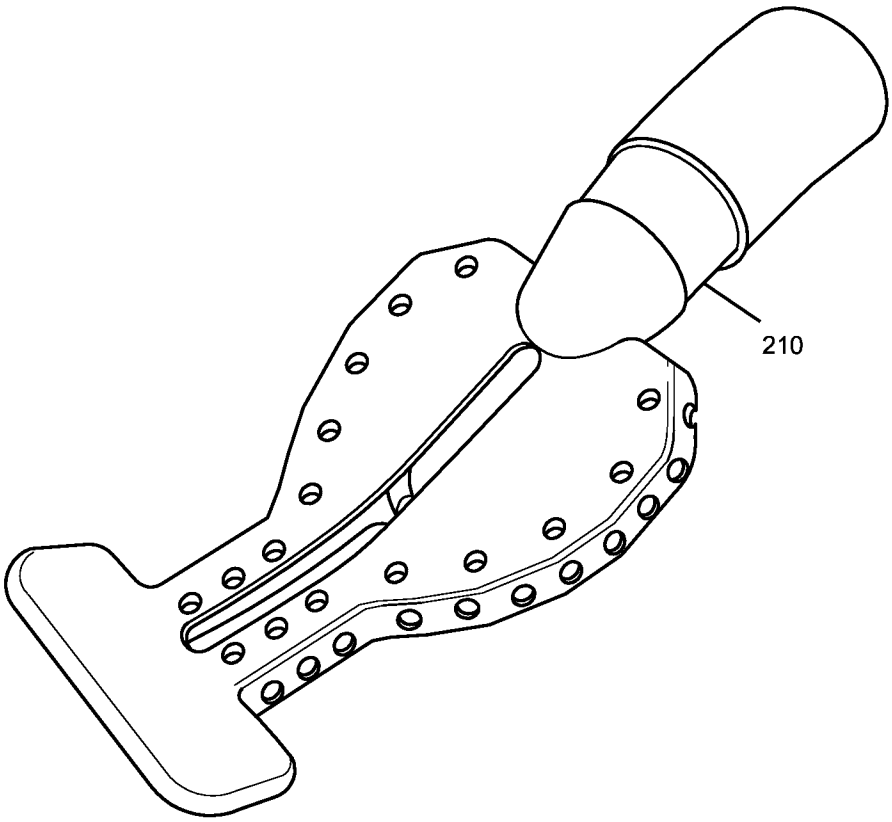

FIG. 2A

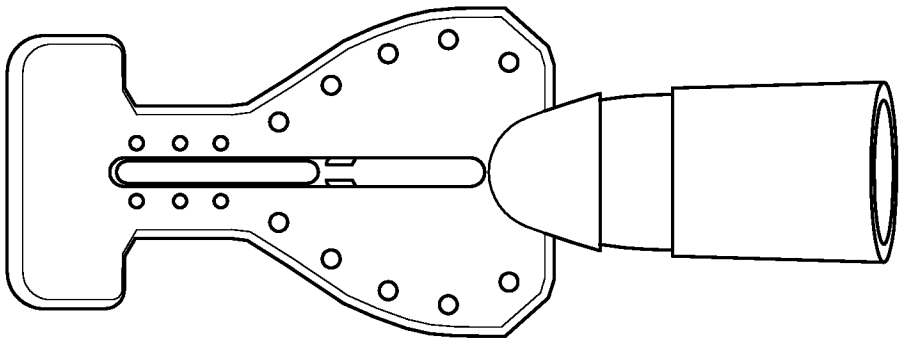

FIG. 2B

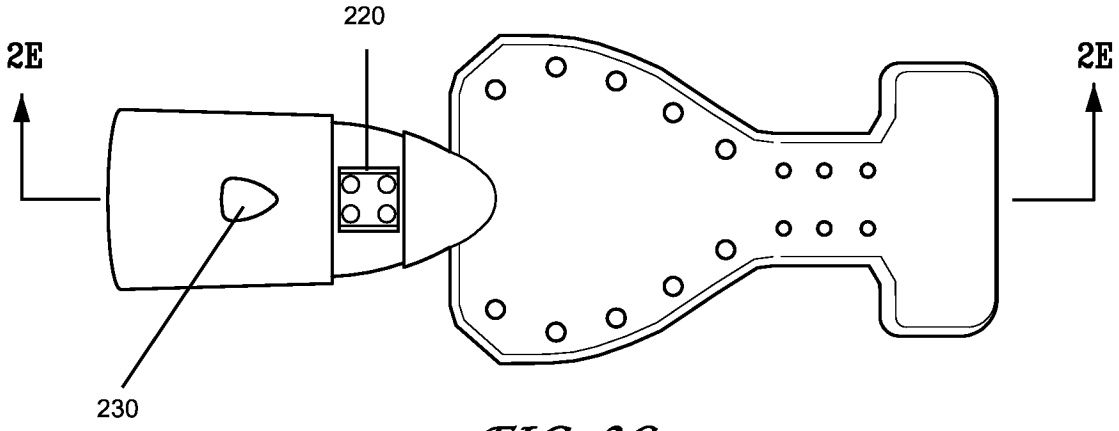

FIG. 2C

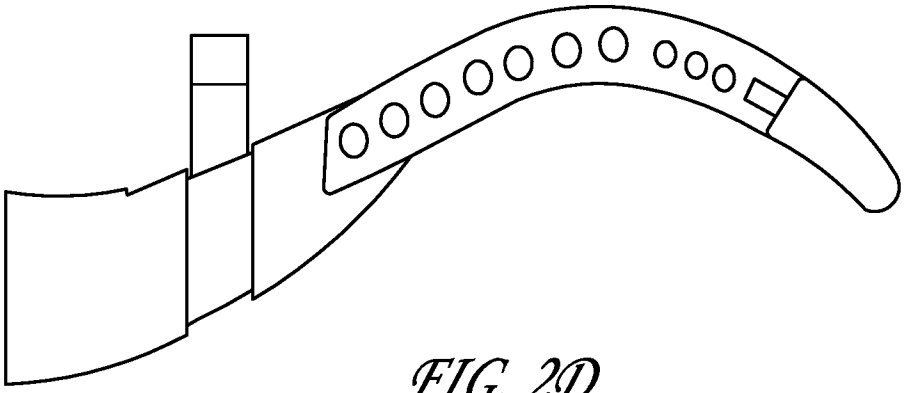

FIG. 2D

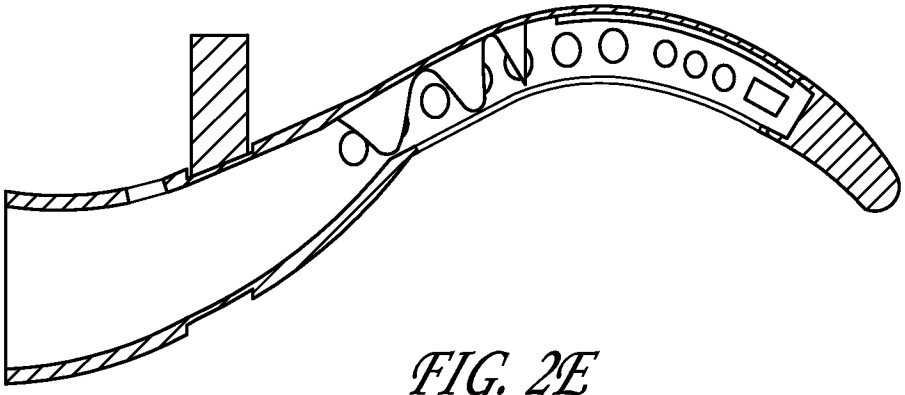

FIG. 2E

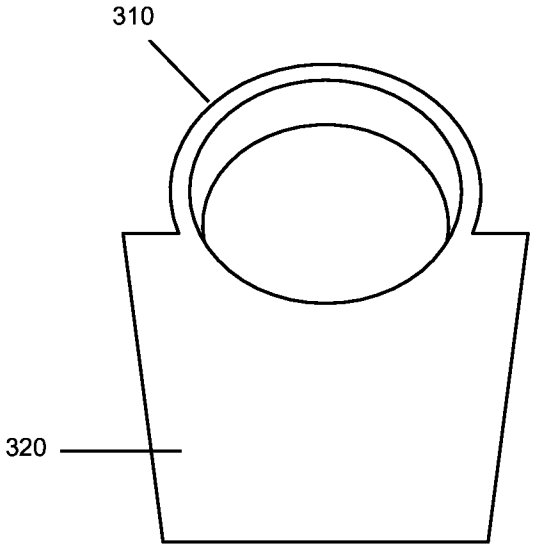

FIG. 3A

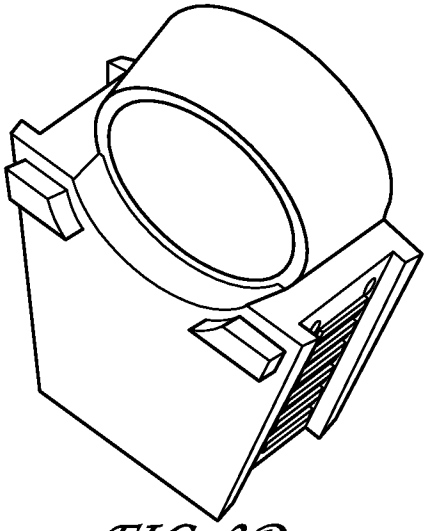

FIG. 3D

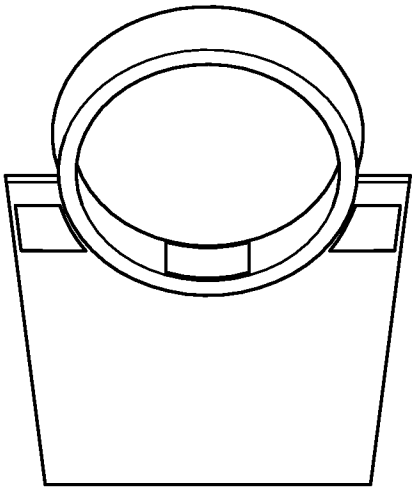

FIG. 3B

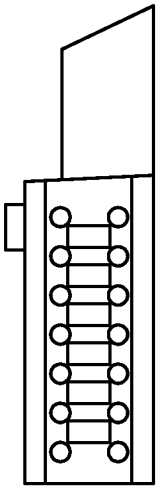

FIG. 3E

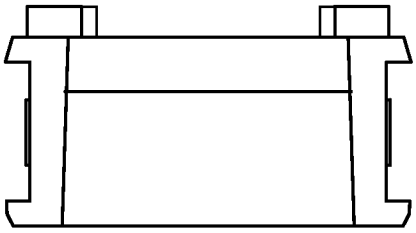

FIG. 3C

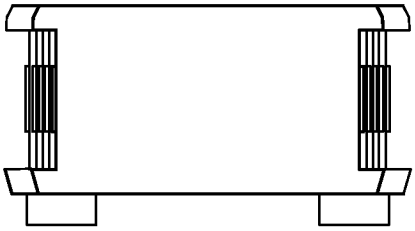

FIG. 3F

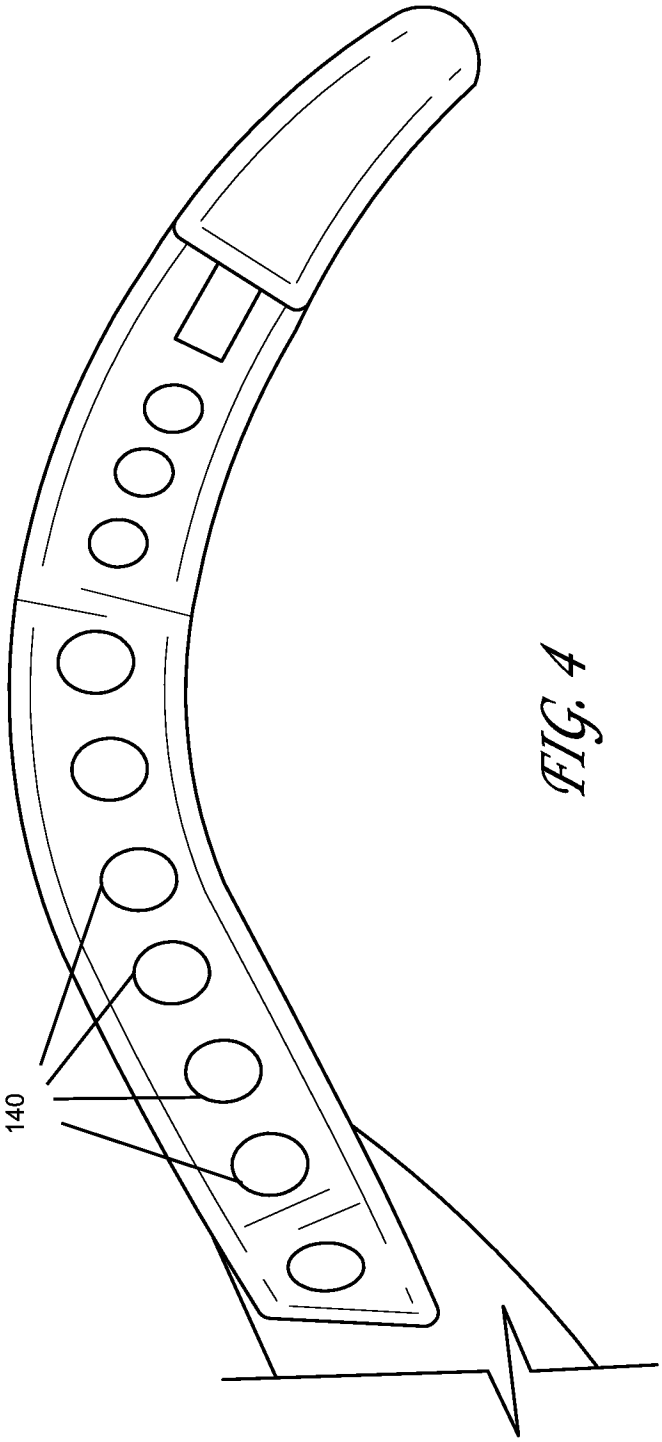

FIG. 4

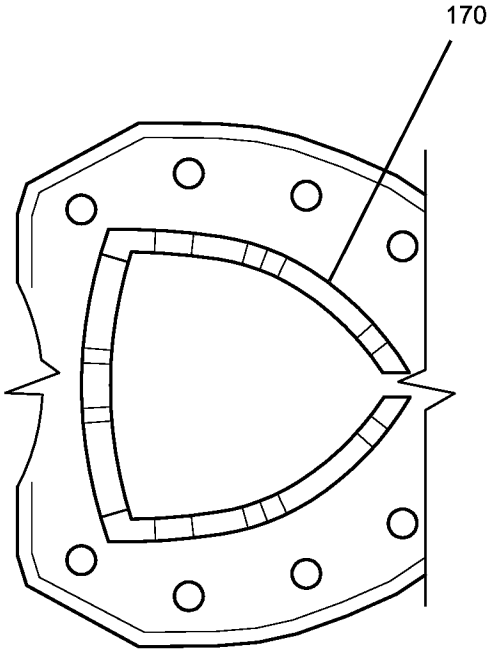

FIG. 5

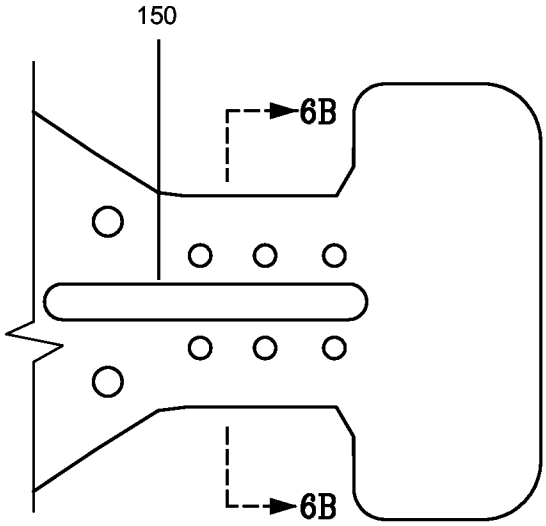

FIG. 6A

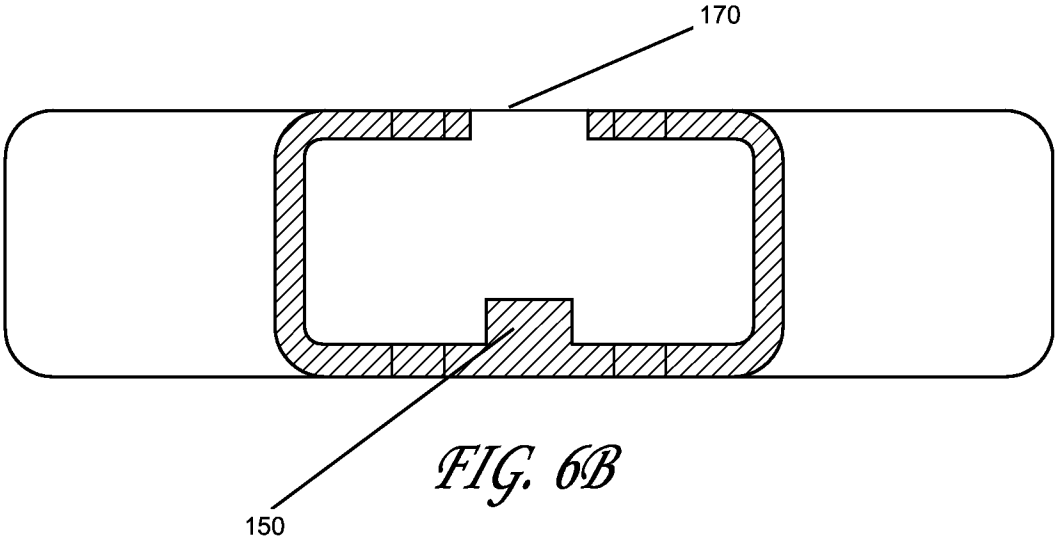

FIG. 6B

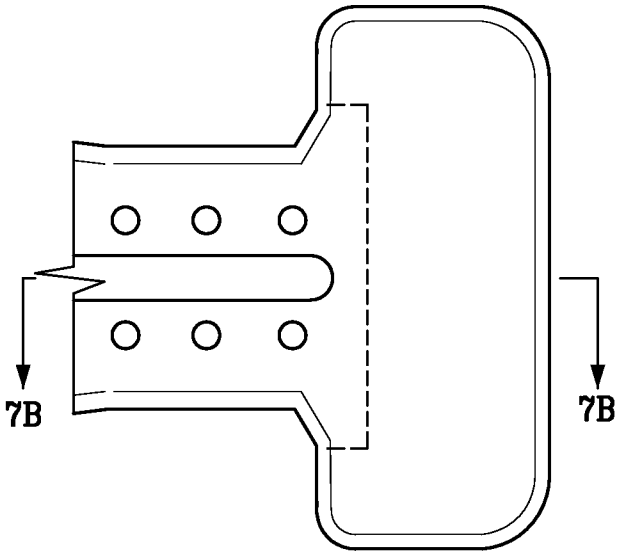

FIG. 7A

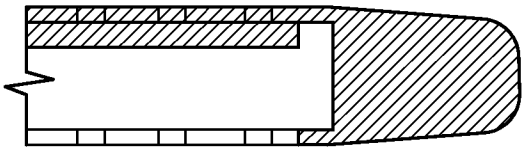

FIG. 7B

INTRAORAL DENTAL SUCTION AND ISOLATION SYSTEM

CROSS-REFERENCE TO RELATED APPLICATIONS

[0001] The present application claims the priority benefit of U.S. provisional patent application number 61/734,939 filed December 7, 2012, the disclosure of which is incorporated herein by reference.

BACKGROUND OF THE INVENTION

1. Field of the Invention

[0002] The present invention generally relates to the field of dental mouthpieces. More specifically, the present invention relates to intraoral dental suction and isolation mouthpieces.

2. Description of Related Art

[0003] Various mouthpieces are currently used by dental health professionals, dental hygienists, and dental assistants in the field of dentistry. In the past, a dental patient has been treated by a traditional two-person team that comprises a dental professional and a dental assistant. Further, dental treatment may be provided by the team using many different types of dental equipment and materials. Such dental equipment and materials may include such items as an intraoral mirror, a bite block, a slow speed suction ejector, a high speed suction ejector, gauzes, cotton rolls, and dry angles. Each item of dental equipment may be used for different purposes, though some may be used in combination for some types of dental services. As such, a dental professional seeking to provide such dental services may need to use multiple items of such dental equipment. An important role of the dental assistant is therefore to assist the dental professional in coordinating the use of these multiple items of different

equipment and materials.

[0004] There is, therefore, a need in the art for improved systems and methods of providing dental services in a more efficient, comfortable, and safe manner to the dental patient.

SUMMARY OF THE CLAIMED INVENTION

[0005] Embodiments of the present invention may include a mouthpiece that may be attached to a high-suction dental adapter for the purpose of assisting the dental staff during dental procedures through chair-side, hands-free suction, and isolation. Such a mouthpiece may comprise a main body portion, a cheek retractor portion, and a suction connector portion. In some embodiments, the main body portion, cheek retractor portion, and suction connector portion (and sub-portions thereof) may be molded in one piece, preferably by injection molding. In an exemplary embodiment, the mouthpiece may be made of a material that is flexible, translucent, conducive to injection molding, high heat-resistant, and autoclavable. Such a material may include silicone. Because the mouthpiece may be made of a high heat-resistant and autoclavable material, such a mouthpiece may be reusable.

[0006] The main body portion may comprise an enclosed pocket made up of an anterior wall, a posterior wall, and a side wall in between the anterior and posterior walls. The side wall may be perforated with a plurality of perforations. Such perforations may constitute a mesh. Additional perforations may be located on the anterior and posterior walls. The main body portion may further include a slit along a longitudinal, central axis on the anterior wall. Such openings (*e.g.*, perforations and slit) allow for suction of air, fluids, and small debris from the patient's mouth, through the openings into the interior portion, and into the suction connector portion towards a suction source. Because the mouthpiece is made of a flexible and resilient material (*e.g.*, silicone), the mouthpiece may be bent when placed in a patient's mouth to conform to the shape of the mouth. When properly positioned, the suction connector portion may protrude from one side of the patient's mouth, while the main body lies against the back of the patient's mouth, and the cheek retractor presses against the patient's cheek on the opposite side of the patient's mouth.

[0007] The main body may further include an protruding bridge structure on the interior surface of the posterior wall. Such a bridge structure may protrude from the

interior surface in a wave shape with crests and troughs. The crests provide a plurality of contact points with the anterior wall to keep the anterior wall separated from the posterior wall during suction. Meanwhile, the troughs provide gaps that allow for suction of air, fluids, and small debris through the bridge structure.

BRIEF DESCRIPTION OF THE FIGURES

[0008] FIG. 1A is a perspective view of an exemplary mouthpiece with a detachable mouth prop.

[0009] FIG. 1B is a top view of the exemplary mouthpiece and detachable mouth prop of FIG. 1A.

[0010] FIG. 1C is a bottom view of the exemplary mouthpiece and detachable mouth prop of FIG. 1A.

[0011] FIG. 1D is a side view of the exemplary mouthpiece and detachable mouth prop of FIG. 1A.

[0012] FIG. 1E is a cross-sectional view of the exemplary mouthpiece and detachable mouth prop of FIG. 1A.

[0013] FIG. 2A is a perspective view of the exemplary mouthpiece of FIG. 1A where the detachable mouth prop has been detached.

[0014] FIG. 2B is a top view of the exemplary mouthpiece of FIG. 2A.

[0015] FIG. 2C is a bottom view of the exemplary mouthpiece of FIG. 2A.

[0016] FIG. 2D is a side view of the exemplary mouthpiece of FIG. 2A.

[0017] FIG. 2E is a cross-sectional view of the exemplary mouthpiece of FIG. 2A.

[0018] FIG. 3A is a front view of an exemplary mouth prop.

[0019] FIG. 3B is a back view of the exemplary mouth prop of FIG. 3A.

[0020] FIG. 3C is a bottom view of the exemplary mouth prop of FIG. 3A.

[0021] FIG. 3D is a perspective view of the exemplary mouth prop of FIG. 3A .

[0022] FIG. 3E is a side view of the exemplary mouth prop of FIG. 3A.

[0023] FIG. 3F is a top view of the exemplary mouth prop of FIG. 3A.

[0024] FIG. 4 is a close-up view of exemplary mesh sides in an exemplary mouthpiece.

[0025] FIG. 5 is a close-up view of an internal bridge in an exemplary mouthpiece.

[0026] FIG. 6A is a close-up view of an exemplary reinforcing bar in an

exemplary mouthpiece.

[0027] FIG. 6B is a cross-sectional view of the exemplary reinforcing bar of FIG. 6A.

[0028] FIG. 7A is a close-up view of an exemplary cheek retractor portion in an exemplary mouthpiece.

[0029] FIG. 7B is a cross-sectional view of the exemplary cheek retractor portion of FIG. 7A.

DETAILED DESCRIPTION

[0030] Embodiments of the present invention provide for a mouthpiece comprising a main body portion, a cheek retractor portion, and a suction connector portion. In some embodiments, the main body portion, cheek retractor portion, and suction connector portion (and sub-portions thereof) may be molded as one-piece, preferably by injection molding. In an exemplary embodiment, the mouthpiece may be made of a material that is flexible, translucent, conducive to injection molding, high heat-resistant, and autoclavable. Such a material may include silicone. Because the mouthpiece may be made of a high heat-resistant and autoclavable material, such a mouthpiece may be reusable.

[0031] FIGs. 1A-E are different views of an exemplary mouthpiece with an attachable mouth prop 160, while FIGs. 2A-E are different views of the exemplary mouthpiece of FIG. 1A where the attachable mouth prop 160 has been detached. Such a mouthpiece may include a main body portion 110, a suction connector portion 120, and a cheek retractor portion 130.

[0032] The main body portion 110 may include mesh or perforations140, a stability bar 150, an open slit 170, and an internal bridge 180. The main body potion 110 may connect to a suction connector portion 120 on one end and a cheek retractor portion 130 at the other end. Such a cheek retractor portion 130 may be configured to press against and retract a patient's cheek away from the patient's teeth. When placed in a patient's mouth, the suction connector portion 120 may protrude from one side of the patient's mouth, while the main body portion 110 lies against the back of the patient's mouth, and the cheek retractor portion 130 retracts the patient's cheek on the opposite side of the patient's mouth. The flexibility of the material used to form the mouthpiece allows for some bending when placed in the patient's mouth. The material is, however, resilient enough that the cheek retractor portion presses against the inside of the patient's cheek with such pressure being sufficient to move the cheek away from the patient's teeth.

[0033] An exemplary main body portion 110, when placed in a mouth, may include an anterior wall facing the front of the mouth (*e.g.*, the side with slit 170) and a posterior wall facing the back of the mouth. The two walls may connect at a superior wall and an inferior wall forming a body that is at least partially enclosed.
Superior may be used herein to refer to the side that rests against a roof of a patient's mouth when placed therein, and inferior may be used to refer to the side that rests against the floor of the patient's mouth. The superior and inferior sides may be formed identically, which may allow for the mouthpiece to change orientation such that the superior side may appear as the inferior side and vice versa, in the new orientation. When in use, the respective sides of the main body portion 110 may serve to protect and separate the top of the mouth and the bottom of the mouth/tongue. In addition, the main body portion 110 may also serve to protect the back of the mouth (*e.g.*, throat and airway) from falling debris.

[0034] Much of the main body portion 110 of the mouthpiece may be shaped as a straight-line arrowhead or shield whose base generally conforms to the intraoral shape of a patient's mouth. Differently-sized mouthpieces may be provided for differently-sized mouths of adults and children. Part of the base side of the arrowhead may be formed with thicker walls than the rest of the main body. Such thickening may provide additional stability.

[0035] In addition, the main body portion 110 of the mouthpiece may include a plurality of holes 140 distributed along the superior and inferior sides of the anterior and posterior walls to assist in suctioning of water, saliva and debris from the oral cavity. In some embodiments, a set of holes may also form a mesh along the walls of the superior and inferior edges. FIG. 4 is a close-up view of an exemplary mesh wall in an exemplary mouthpiece.

[0036] At the narrow end of the arrowhead that connects to the cheek retractor portion 130, the main body portion 110 may include a rectangular portion. Narrower than the base of the arrowhead, the rectangle may additionally include a reinforcing bar (or stability bar) 150 (described in further detail below) and may be at least partially

crossed by a slit 170 (described in further detail below) into the interior of the pocket of the main body portion 110.

[0037] Stability bar 150 may be a protrusion or otherwise a thickened area that reinforces the stability of the rectangular portion and assist in shaping this region to the intraoral posterior shape of a patient's mouth. FIG. 6A is a close-up view of an exemplary stability bar 150 of an exemplary mouthpiece. FIG. 6B is a cross-sectional view of the exemplary reinforcing bar in the cheek retractor connector portion of FIG. 6A.

[0038] In some embodiments, the internal, rectangular-shaped reinforcing or stability bar 150 may be located distally to the internal wavelike bridge structure 180 and attached to both the interior side of the posterior surface of the main body and the rectangular portion. Such a stability bar 150 may be located in the area where a positioned mouthpiece begins to wrap from the lingual side of the most posterior mandibular tooth, around the distal side of the most posterior tooth, and to anterior side of the most posterior mandibular tooth, thereby assisting in shaping the mouthpiece to the general intraoral shape of a patient's mouth.

[0039] Various embodiments of the mouthpiece may further include a longitudinal, open slit 170 extending over approximately two-thirds of the main body on the anterior surface. Running along the center of the main body across the rectangle and most of the arrowhead, such a slit 170 may assist in capture and suction of water, saliva and debris, as well as assisting in cleaning and maintenance.

[0040] Additionally, the main body of the mouthpiece may include a bridge structure 180 on an interior surface to ensure that the anterior and posterior surfaces remain separated during suction. FIG. 1E is a cross-sectional view of the mouthpiece in which the bridge structure 180 is illustrated. FIG. 5 is a close-up view of the bridge structure 180 without the surrounding walls of the main body portion. Such a bridge structure 180 may be formed as an wave-like protrusion that generally corresponds to the distance between the anterior and posterior walls extending substantially (*e.g.*, within 1 mm) the full distance at its crest and substantially flush to the surface at its

trough. In some embodiments, the bridge structure 180 may be centrally-located in the main body portion 110 of the mouthpiece. The gaps (or troughs) between the waves of the bridge structure 180 assist in the suction-driven transfer of water and saliva to the suction connector portion 120 and ultimately, into a central suction vacuum. In some embodiments, the bridge structure 180 may follow the shape of a logo (e.g., an arrowhead or shield).

[0041] The suction connector portion 120 may be oval-shaped and also attached to the main body portion 110. The suction connector portion 120 may be formed with thicker walls than the main body portion 110 and configured to attach to a high-suction vacuum adapter and to assist in transferring water, saliva, and debris from the oral cavity to the external adapter for removal. The suction connector portion 120 may also include an internal stop to assist in sliding the mouthpiece onto the adapter to a desired depth. The suction connector portion 120 may additionally have an external, concave, notched region 210 that corresponds to a removable strap such that when the strap is in place, the external walls of the strap and the rest of the connector portion may be flush.

[0042] The cheek retractor portion 130 is illustrated as a hammerhead distal region, which may be attached to the main body portion 110. FIG. 7A is a close-up view of an exemplary cheek retractor portion 130 in an exemplary mouthpiece. FIG. 7B is a cross-sectional view of the exemplary cheek retractor portion 130 of FIG. 7A.

[0043] The mouthpiece may be used with a mouth prop 160, as illustrated in FIGs. 1 (with a mouth prop 160) and FIGs. 2 (illustrated without the mouth prop 160). FIGs. 3A-E provide different close-up views of an exemplary mouth prop 160. The removable strap 310 may be attached to mouth prop 160, which may be used to prop open a patient's mouth and teeth. In this regard, the suction connector portion 120 may additionally have an external plug 220 (FIG. 2C) protruding from the posterior side of the suction connector portion 120. Such a plug 220 may correspond to and serve to connect with an opening in the mouth prop 160. The mouth prop 160 may be reinforced by the presence of the plug 220 in the opening, thereby resulting in a more crush-resistant, nearly incompressible, and stable mouth prop 160. In some embodiments, the

suction connector portion 120 may further have a cutout 230 (*e.g.,* which may be shaped as a logo) providing extra interlocking with a corresponding protrusion (*e.g.*, which may also be shaped as a logo) on an external high-suction vacuum adapter.

[0044] The mouth prop 160 may be made of thickened silicone material injection molded in a single piece with an elastic strap corresponding to the circumference of the suction connector portion. The mouth prop 160 has an internal, rectangular-shaped female slot designed to fit snugly with the external, rectangular-shaped male plug 220 of the suction connector portion 120 of the mouthpiece. Mouth props may be made in different sizes for differently sized mouths. Because the mouth prop and mouthpiece are detachable from each other, different sizes of each may be mixed and matched as needed for a particular patient's mouth.

[0045] The mouthpiece as described herein may be used with a one-piece, autoclavable, high-suction vacuum adapter. Such a high-suction vacuum body adapter may be made of a single homogenous material. Having a single lever design, such a vacuum adapter may function in the same manner as all the current high-suction vacuum evacuators and saliva ejectors in controlling the removal of water, saliva, and debris from the oral cavity to the outside vacuum source. The single lever may be designed to control the removal of water, saliva, and debris from the at least partially enclosed so main body through a single, large evacuation conduit within the suction connector portion.

[0046] While various embodiments have been described above, it should be understood that they have been presented by way of example only, and not limitation. The descriptions are not intended to limit the scope of the invention to the particular forms set forth herein. Thus, the breadth and scope of a preferred embodiment should not be limited by any of the above-described exemplary embodiments. It should be understood that the above description is illustrative and not restrictive. To the contrary, the present descriptions are intended to cover such alternatives, modifications, and equivalents as may be included within the spirit and scope of the invention as defined by the appended claims and otherwise appreciated by one of ordinary skill in the art.

The scope of the invention should, therefore, be determined not with reference to the above description, but instead should be determined with reference to the appended claims along with their full scope of equivalents.

CLAIMS

WHAT IS CLAIMED IS:

1. A dental mouthpiece composed of a material, the dental mouthpiece comprising:

a main body portion comprising a defined pocket having an anterior wall, a posterior wall, and a side wall in between the anterior wall and the posterior wall, wherein the anterior wall, the posterior wall, and the side wall define an interior portion of the defined pocket;

a cheek retractor portion configured to press against a cheek of a patient when placed in a mouth of the patient, wherein resilience of the material causes the cheek retractor portion to retract a cheek of the patient away from the teeth of the patient; and

a suction connector portion for connecting the interior portion of the main body to a vacuum suction source.

2. The mouthpiece of claim 1, wherein the side wall includes a plurality of perforations.

3. The mouthpiece of claim 1, wherein the anterior wall and the posterior wall each includes a plurality of perforations.

4. The mouthpiece of claim 1, wherein the anterior wall further includes a slit along a central axis.

5. The mouthpiece of claim 1, further comprising a stability bar protruding from an interior surface of the posterior wall, wherein a thickness of the stability bar increases resilience of the cheek retractor portion during bending.

6. The mouthpiece of claim 1, wherein the main body portion, the cheek retractor portion, and the suction connector portion are formed by injection-molded as one piece.

7. The mouthpiece of claim 1, wherein the material used in the injection-molding is a flexible, translucent, high heat-resistant, autoclavable silicone-based material.

8. The mouthpiece of claim 1, further comprising a bridge structure protruding from an interior surface of the posterior wall, the protruding bridge structure comprising a plurality of spaced contact points that keep the anterior wall separated from the posterior wall during suction.

9. The mouthpiece of claim 8, wherein the bridge structure protrudes from the interior surface of the posterior wall in a wave shape, and wherein the contact points are at crests of the wave shape.

10. The mouthpiece of claim 9, wherein troughs of the wave shape are configured to allow suction through the bridge structure.

11. The mouthpiece of claim 1, wherein the suction connector portion comprises an internal stop to assist in positioning of a vacuum suction source or a vacuum adaptor.

12. The mouthpiece of claim 1, further comprising a detachable mouth prop.

13. The mouthpiece of claim 12, wherein the detachable mouth prop comprises a strap configured to fit around the suction connector portion, wherein an external surface of the suction connector portion comprises a notch region corresponding to the strap, and wherein an external surface of the strap is substantially flush with a remaining external surface of the suction connector portion when the strap sits in the notch region.

14. The mouthpiece of claim 13, wherein the strap is injection-molded in a single piece with the mouth prop.

15. The mouthpiece of claim 1, wherein the suction connector portion further comprises an external plug protrusion corresponding to an opening in a mouth prop associated with the strap.

16. The mouthpiece of claim 15, wherein the plug protrusion fits into the opening to provide additional crush-resistance and decreased compressibility during biting by the patient.

17. The mouthpiece of claim 1, wherein the suction connector portion comprises a cutout corresponding to a protrusion on a vacuum adapter for an interlocking fit.

18. The mouthpiece of claim 1, wherein the anterior wall and the posterior wall have different thicknesses.

ABSTRACT

A dental mouthpiece is provided that may be attached to a high-suction dental adapter for the purpose of assisting the dental staff during dental procedures through chair-side, hands-free suction, and isolation. Such a mouthpiece may comprise a main body portion, a cheek retractor portion, and a suction connector portion. In some embodiments, the main body portion, cheek retractor portion, and suction connector portion (and sub-portions thereof) may be molded in one piece, preferably by injection molding. In an exemplary embodiment, the mouthpiece may be made of a material that is flexible, translucent, conducive to injection molding, high heat-resistant, and autoclavable. Such a material may include silicone. Because the mouthpiece may be made of a high heat-resistant and autoclavable material, such a mouthpiece may be reusable.

Application Data Sheet 37 CFR 1.76	Attorney Docket Number	INCEPT-001
	Application Number	
Title of Invention	INTRAORAL DENTAL SUCTION AND ISOLATION SYSTEM	

The application data sheet is part of the provisional or nonprovisional application for which it is being submitted. The following form contains the bibliographic data arranged in a format specified by the United States Patent and Trademark Office as outlined in 37 CFR 1.76.
This document may be completed electronically and submitted to the Office in electronic format using the Electronic Filing System (EFS) or the document may be printed and included in a paper filed application.

Secrecy Order 37 CFR 5.2

☐ Portions or all of the application associated with this Application Data Sheet may fall under a Secrecy Order pursuant to 37 CFR 5.2(Paper filers only. Applications that fall under Secrecy Order may not be filed electronically.)

Inventor Information:

Inventor 1 Remove

Legal Name

Prefix	Given Name	Middle Name	Family Name	Suffix
	Thien		Nguyen	

Residence Information (Select One) ◉ US Residency ◯ Non US Residency ◯ Active US Military Service

City	Santa Ana	State/Province	CA	Country of Residence	US

Mailing Address of Inventor:

Address 1	1828 W. Deerefield Road		
Address 2			
City	Santa Ana	State/Province	CA
Postal Code	92704	Country i	US

Inventor 2 Remove

Legal Name

Prefix	Given Name	Middle Name	Family Name	Suffix
	Tam Thanh		Pham	

Residence Information (Select One) ◉ US Residency ◯ Non US Residency ◯ Active US Military Service

City	San Francisco	State/Province	CA	Country of Residence	US

Mailing Address of Inventor:

Address 1	1828 W. Deerefield Road		
Address 2			
City	Santa Ana	State/Province	CA
Postal Code	92704	Country i	US

All Inventors Must Be Listed - Additional Inventor Information blocks may be generated within this form by selecting the **Add** button. Add

Correspondence Information:

Enter either Customer Number or complete the Correspondence Information section below.
For further information see 37 CFR 1.33(a).

Application Data Sheet 37 CFR 1.76	Attorney Docket Number	INCEPT-001
	Application Number	
Title of Invention	INTRAORAL DENTAL SUCTION AND ISOLATION SYSTEM	

☐ **An Address is being provided for the correspondence Information of this application.**			
Customer Number	28661		
Email Address		Add Email	Remove Email

Application Information:

Title of the Invention	INTRAORAL DENTAL SUCTION AND ISOLATION SYSTEM		
Attorney Docket Number	INCEPT-001	**Small Entity Status Claimed**	☒
Application Type			
Subject Matter			
Total Number of Drawing Sheets (if any)	11	**Suggested Figure for Publication (if any)**	

Publication Information:

☐ Request Early Publication (Fee required at time of Request 37 CFR 1.219)

☐ **Request Not to Publish.** I hereby request that the attached application not be published under 35 U.S.C. 122(b) and certify that the invention disclosed in the attached application **has not and will not** be the subject of an application filed in another country, or under a multilateral international agreement, that requires publication at eighteen months after filing.

Representative Information:

Representative information should be provided for all practitioners having a power of attorney in the application. Providing this information in the Application Data Sheet does not constitute a power of attorney in the application (see 37 CFR 1.32).
Either enter Customer Number or complete the Representative Name section below. If both sections are completed the customer Number will be used for the Representative Information during processing.

Please Select One:	◉ Customer Number	○ US Patent Practitioner	○ Limited Recognition (37 CFR 11.9)
Customer Number	28661		

Additional Representative Information blocks may be generated within this form by selecting the **Add** button.

Domestic Benefit/National Stage Information:

This section allows for the applicant to either claim benefit under 35 U.S.C. 119(e), 120, 121, or 365(c) or indicate National Stage entry from a PCT application. Providing this information in the application data sheet constitutes the specific reference required by 35 U.S.C. 119(e) or 120, and 37 CFR 1.78.

Prior Application Status	Pending		Remove
Application Number	Continuity Type	Prior Application Number	Filing Date (YYYY-MM-DD)
	Claims benefit of provisional	61734939	2012-12-07

Additional Domestic Benefit/National Stage Data may be generated within this form by selecting the **Add** button.

Application Data Sheet 37 CFR 1.76	Attorney Docket Number	INCEPT-001
	Application Number	
Title of Invention	INTRAORAL DENTAL SUCTION AND ISOLATION SYSTEM	

Foreign Priority Information:

This section allows for the applicant to claim priority to a foreign application. Providing this information in the application data sheet constitutes the claim for priority as required by 35 U.S.C. 119(b) and 37 CFR 1.55(d). When priority is claimed to a foreign application that is eligible for retrieval under the priority document exchange program (PDX) the information will be used by the Office to automatically attempt retrieval pursuant to 37 CFR 1.55(h)(1) and (2). Under the PDX program, applicant bears the ultimate responsibility for ensuring that a copy of the foreign application is received by the Office from the participating foreign intellectual property office, or a certified copy of the foreign priority application is filed, within the time period specified in 37 CFR 1.55(g)(1).

Remove

Application Number	Country i	Filing Date (YYYY-MM-DD)	Access Code (if applicable)

Additional Foreign Priority Data may be generated within this form by selecting the **Add** button.

Statement under 37 CFR 1.55 or 1.78 for AIA (First Inventor to File) Transition Applications

☐ This application (1) claims priority to or the benefit of an application filed before March 16, 2013 and (2) also contains, or contained at any time, a claim to a claimed invention that has an effective filing date on or after March 16, 2013.
NOTE: By providing this statement under 37 CFR 1.55 or 1.78, this application, with a filing date on or after March 16, 2013, will be examined under the first inventor to file provisions of the AIA.

Authorization to Permit Access:

☐ Authorization to Permit Access to the Instant Application by the Participating Offices

Application Data Sheet 37 CFR 1.76	Attorney Docket Number	INCEPT-001
	Application Number	
Title of Invention	INTRAORAL DENTAL SUCTION AND ISOLATION SYSTEM	

If checked, the undersigned hereby grants the USPTO authority to provide the European Patent Office (EPO), the Japan Patent Office (JPO), the Korean Intellectual Property Office (KIPO), the World Intellectual Property Office (WIPO), and any other intellectual property offices in which a foreign application claiming priority to the instant patent application is filed access to the instant patent application. See 37 CFR 1.14(c) and (h). This box should not be checked if the applicant does not wish the EPO, JPO, KIPO, WIPO, or other intellectual property office in which a foreign application claiming priority to the instant patent application is filed to have access to the instant patent application.

In accordance with 37 CFR 1.14(h)(3), access will be provided to a copy of the instant patent application with respect to: 1) the instant patent application-as-filed; 2) any foreign application to which the instant patent application claims priority under 35 U.S.C. 119(a)-(d) if a copy of the foreign application that satisfies the certified copy requirement of 37 CFR 1.55 has been filed in the instant patent application; and 3) any U.S. application-as-filed from which benefit is sought in the instant patent application.

In accordance with 37 CFR 1.14(c), access may be provided to information concerning the date of filing this Authorization.

Applicant Information:

Providing assignment information in this section does not substitute for compliance with any requirement of part 3 of Title 37 of CFR to have an assignment recorded by the Office.

Applicant 1

If the applicant is the inventor (or the remaining joint inventor or inventors under 37 CFR 1.45), this section should not be completed. The information to be provided in this section is the name and address of the legal representative who is the applicant under 37 CFR 1.43; or the name and address of the assignee, person to whom the inventor is under an obligation to assign the invention, or person who otherwise shows sufficient proprietary interest in the matter who is the applicant under 37 CFR 1.46. If the applicant is an applicant under 37 CFR 1.46 (assignee, person to whom the inventor is obligated to assign, or person who otherwise shows sufficient proprietary interest) together with one or more joint inventors, then the joint inventor or inventors who are also the applicant should be identified in this section.

Clear

- (●) Assignee
- ( ) Legal Representative under 35 U.S.C. 117
- ( ) Joint Inventor
- ( ) Person to whom the inventor is obligated to assign.
- ( ) Person who shows sufficient proprietary interest

If applicant is the legal representative, indicate the authority to file the patent application, the inventor is:

Name of the Deceased or Legally Incapacitated Inventor :

If the Applicant is an Organization check here. ☒

Organization Name	Incept Incorporated		
Mailing Address Information:			
Address 1	1828 W. Deerefield Road		
Address 2			
City	Santa Ana	**State/Province**	CA
Country i	US	Postal Code	92704
Phone Number		Fax Number	

Application Data Sheet 37 CFR 1.76	Attorney Docket Number	INCEPT-001
	Application Number	
Title of Invention	INTRAORAL DENTAL SUCTION AND ISOLATION SYSTEM	

Email Address	

Additional Applicant Data may be generated within this form by selecting the Add button.

Assignee Information including Non-Applicant Assignee Information:

Providing assignment information in this section does not subsitute for compliance with any requirement of part 3 of Title 37 of CFR to have an assignment recorded by the Office.

Assignee 1

Complete this section if assignee information, including non-applicant assignee information, is desired to be included on the patent application publication . An assignee-applicant identified in the "Applicant Information" section will appear on the patent application publication as an applicant. For an assignee-applicant, complete this section only if identification as an assignee is also desired on the patent application publication.

If the Assignee or Non-Applicant Assignee is an Organization check here ☐

Prefix	**Given Name**	Middle Name	**Family Name**	Suffix

Mailing Address Information For Assignee including Non-Applicant Assignee:

Address 1			
Address 2			
City		**State/Province**	
Country i		Postal Code	
Phone Number		Fax Number	
Email Address			

Additional Assignee or Non-Applicant Assignee Data may be generated within this form by selecting the Add button.

Signature:

NOTE: This form must be signed in accordance with 37 CFR 1.33. See 37 CFR 1.4 for signature requirements and certifications

Signature	/Tam Thanh Pham/				
First Name	Tam Thanh	Last Name	Pham	Registration Number	50565

Additional Signature may be generated within this form by selecting the Add button.

Electronic Patent Application Fee Transmittal

Application Number:	
Filing Date:	
Title of Invention:	INTRAORAL DENTAL SUCTION AND ISOLATION SYSTEM
First Named Inventor/Applicant Name:	Thien Nguyen
Filer:	TamThanh Thi Pham/Adriena Garcia
Attorney Docket Number:	INCEPT-001

Filed as Small Entity

Utility under 35 USC 111(a) Filing Fees

Description	Fee Code	Quantity	Amount	Sub-Total in USD($)
Basic Filing:				
Utility filing Fee (Electronic filing)	4011	1	70	70
Utility Search Fee	2111	1	300	300
Utility Examination Fee	2311	1	360	360
Pages:				
Claims:				
Miscellaneous-Filing:				
Petition:				
Patent-Appeals-and-Interference:				

Description	Fee Code	Quantity	Amount	Sub-Total in USD($)
Post-Allowance-and-Post-Issuance:				
Extension-of-Time:				
Miscellaneous:				
			Total in USD ($)	**730**

Electronic Acknowledgement Receipt

EFS ID:	17590510
Application Number:	14100323
International Application Number:	
Confirmation Number:	5734
Title of Invention:	INTRAORAL DENTAL SUCTION AND ISOLATION SYSTEM
First Named Inventor/Applicant Name:	Thien Nguyen
Customer Number:	28661
Filer:	TamThanh Thi Pham/Adriena Garcia
Filer Authorized By:	TamThanh Thi Pham
Attorney Docket Number:	INCEPT-001
Receipt Date:	09-DEC-2013
Filing Date:	
Time Stamp:	14:19:10
Application Type:	Utility under 35 USC 111(a)

Payment information:

Submitted with Payment	yes
Payment Type	Deposit Account
Payment was successfully received in RAM	$730
RAM confirmation Number	607
Deposit Account	500612
Authorized User	

The Director of the USPTO is hereby authorized to charge indicated fees and credit any overpayment as follows:

Charge any Additional Fees required under 37 C.F.R. Section 1.16 (National application filing, search, and examination fees)

Charge any Additional Fees required under 37 C.F.R. Section 1.17 (Patent application and reexamination processing fees)

Charge any Additional Fees required under 37 C.F.R. Section 1.19 (Document supply fees)

Charge any Additional Fees required under 37 C.F.R. Section 1.20 (Post Issuance fees)

Charge any Additional Fees required under 37 C.F.R. Section 1.21 (Miscellaneous fees and charges)

File Listing:

Document Number	Document Description	File Name	File Size(Bytes)/ Message Digest	Multi Part /.zip	Pages (if appl.)
1	Drawings-only black and white line drawings	INCEPT-001_Figures_12-6-13.pdf	183297 1366af89f6d6128252ff45aef5dddb97e26b6ea0	no	11
Warnings:					
Information:					
2		INCEPT-001_Specification_12-6-13.pdf	128401 79ca4dd304541ab07f5d3e175c7f6ce8779b45ef	yes	16
	Multipart Description/PDF files in .zip description				
	Document Description		**Start**	**End**	
	Specification		1	11	
	Claims		12	15	
	Abstract		16	16	
Warnings:					
Information:					
3	Application Data Sheet	WebADS.pdf	103814 fc43a50e269b83d52fa59fc21b77c537f4e45128	no	5
Warnings:					
Information:					
4	Fee Worksheet (SB06)	fee-info.pdf	32616 7758ad552581d7a6f197d5e2fefe58d497b3a73c	no	2
Warnings:					
Information:					
		Total Files Size (in bytes):	448128		

This Acknowledgement Receipt evidences receipt on the noted date by the USPTO of the indicated documents, characterized by the applicant, and including page counts, where applicable. It serves as evidence of receipt similar to a Post Card, as described in MPEP 503.

New Applications Under 35 U.S.C. 111
If a new application is being filed and the application includes the necessary components for a filing date (see 37 CFR 1.53(b)-(d) and MPEP 506), a Filing Receipt (37 CFR 1.54) will be issued in due course and the date shown on this Acknowledgement Receipt will establish the filing date of the application.

National Stage of an International Application under 35 U.S.C. 371
If a timely submission to enter the national stage of an international application is compliant with the conditions of 35 U.S.C. 371 and other applicable requirements a Form PCT/DO/EO/903 indicating acceptance of the application as a national stage submission under 35 U.S.C. 371 will be issued in addition to the Filing Receipt, in due course.

New International Application Filed with the USPTO as a Receiving Office
If a new international application is being filed and the international application includes the necessary components for an international filing date (see PCT Article 11 and MPEP 1810), a Notification of the International Application Number and of the International Filing Date (Form PCT/RO/105) will be issued in due course, subject to prescriptions concerning national security, and the date shown on this Acknowledgement Receipt will establish the international filing date of the application.

Document code: WFEE

United States Patent and Trademark Office
Sales Receipt for Accounting Date: 12/19/2013

CCETIN SALE #00000008 Mailroom Dt: 12/09/2013 500612 14100323
01 FC : 2051 70.00 DA

UNITED STATES PATENT AND TRADEMARK OFFICE

UNITED STATES DEPARTMENT OF COMMERCE
United States Patent and Trademark Office
Address: COMMISSIONER FOR PATENTS
P.O. Box 1450
Alexandria, Virginia 22313-1450
www.uspto.gov

APPLICATION NUMBER	FILING OR 371(C) DATE	FIRST NAMED APPLICANT	ATTY. DOCKET NO./TITLE
14/100,323	12/09/2013	Thien Nguyen	INCEP-001

CONFIRMATION NO. 5734

28661
Lewis Roca Rothgerber LLP
2440 W. El Camino Real, 6th Floor
Mountain View, CA 94040

NOTICE

OC000000065653310

Date Mailed: 12/30/2013

INFORMATIONAL NOTICE TO APPLICANT

Applicant is notified that the above-identified application contains the deficiencies noted below. No period for reply is set forth in this notice for correction of these deficiencies. However, if a deficiency relates to the inventor's oath or declaration, the applicant must file an oath or declaration in compliance with 37 CFR 1.63, or a substitute statement in compliance with 37 CFR 1.64, executed by or with respect to each actual inventor no later than the expiration of the time period set in the "Notice of Allowability" to avoid abandonment. See 37 CFR 1.53(f).

The item(s) indicated below are also required and should be submitted with any reply to this notice to avoid further processing delays.

- A properly executed inventor's oath or declaration has not been received for the following inventor(s):
  Thien Nguyen
  Tam Thanh Pham

PATENT APPLICATION FEE DETERMINATION RECORD

Substitute for Form PTO-875

Application or Docket Number
14/100,323

APPLICATION AS FILED - PART I

FOR	(Column 1) NUMBER FILED	(Column 2) NUMBER EXTRA	SMALL ENTITY RATE($)	SMALL ENTITY FEE($)	OR	OTHER THAN SMALL ENTITY RATE($)	OTHER THAN SMALL ENTITY FEE($)
BASIC FEE (37 CFR 1.16(a), (b), or (c))	N/A	N/A	N/A	70		N/A	
SEARCH FEE (37 CFR 1.16(k), (i), or (m))	N/A	N/A	N/A	300		N/A	
EXAMINATION FEE (37 CFR 1.16(o), (p), or (q))	N/A	N/A	N/A	360		N/A	
TOTAL CLAIMS (37 CFR 1.16(i))	18 minus 20 =	*	x 40 =	0.00	OR		
INDEPENDENT CLAIMS (37 CFR 1.16(h))	1 minus 3 =	*	x 210 =	0.00			
APPLICATION SIZE FEE (37 CFR 1.16(s))	If the specification and drawings exceed 100 sheets of paper, the application size fee due is $310 ($155 for small entity) for each additional 50 sheets or fraction thereof. See 35 U.S.C. 41(a)(1)(G) and 37 CFR 1.16(s).			0.00			
MULTIPLE DEPENDENT CLAIM PRESENT (37 CFR 1.16(j))				0.00			
* If the difference in column 1 is less than zero, enter "0" in column 2.			TOTAL	730		TOTAL	

APPLICATION AS AMENDED - PART II

		(Column 1) CLAIMS REMAINING AFTER AMENDMENT		(Column 2) HIGHEST NUMBER PREVIOUSLY PAID FOR	(Column 3) PRESENT EXTRA	SMALL ENTITY RATE($)	SMALL ENTITY ADDITIONAL FEE($)	OR	OTHER THAN SMALL ENTITY RATE($)	OTHER THAN SMALL ENTITY ADDITIONAL FEE($)
AMENDMENT A	Total (37 CFR 1.16(i))	*	Minus	**	=	x =		OR	x =	
AMENDMENT A	Independent (37 CFR 1.16(h))	*	Minus	***	=	x =		OR	x =	
AMENDMENT A	Application Size Fee (37 CFR 1.16(s))									
AMENDMENT A	FIRST PRESENTATION OF MULTIPLE DEPENDENT CLAIM (37 CFR 1.16(j))							OR		
						TOTAL ADD'L FEE		OR	TOTAL ADD'L FEE	

		(Column 1) CLAIMS REMAINING AFTER AMENDMENT		(Column 2) HIGHEST NUMBER PREVIOUSLY PAID FOR	(Column 3) PRESENT EXTRA	RATE($)	ADDITIONAL FEE($)		RATE($)	ADDITIONAL FEE($)
AMENDMENT B	Total (37 CFR 1.16(i))	*	Minus	**	=	x =		OR	x =	
AMENDMENT B	Independent (37 CFR 1.16(h))	*	Minus	***	=	x =		OR	x =	
AMENDMENT B	Application Size Fee (37 CFR 1.16(s))									
AMENDMENT B	FIRST PRESENTATION OF MULTIPLE DEPENDENT CLAIM (37 CFR 1.16(j))							OR		
						TOTAL ADD'L FEE		OR	TOTAL ADD'L FEE	

* If the entry in column 1 is less than the entry in column 2, write "0" in column 3.
** If the "Highest Number Previously Paid For" IN THIS SPACE is less than 20, enter "20".
*** If the "Highest Number Previously Paid For" IN THIS SPACE is less than 3, enter "3".
The "Highest Number Previously Paid For" (Total or Independent) is the highest found in the appropriate box in column 1.

UNITED STATES PATENT AND TRADEMARK OFFICE

UNITED STATES DEPARTMENT OF COMMERCE
United States Patent and Trademark Office
Address: COMMISSIONER FOR PATENTS
P.O. Box 1450
Alexandria, Virginia 22313-1450
www.uspto.gov

APPLICATION NUMBER	FILING or 371(c) DATE	GRP ART UNIT	FIL FEE REC'D	ATTY.DOCKET.NO	TOT CLAIMS	IND CLAIMS
14/100,323	12/09/2013	3732	800	INCEP-001	18	1

CONFIRMATION NO. 5734

28661
Lewis Roca Rothgerber LLP
2440 W. El Camino Real, 6th Floor
Mountain View, CA 94040

FILING RECEIPT

OC000000065653309

Date Mailed: 12/30/2013

Receipt is acknowledged of this non-provisional patent application. The application will be taken up for examination in due course. Applicant will be notified as to the results of the examination. Any correspondence concerning the application must include the following identification information: the U.S. APPLICATION NUMBER, FILING DATE, NAME OF APPLICANT, and TITLE OF INVENTION. Fees transmitted by check or draft are subject to collection. Please verify the accuracy of the data presented on this receipt. **If an error is noted on this Filing Receipt, please submit a written request for a Filing Receipt Correction. Please provide a copy of this Filing Receipt with the changes noted thereon. If you received a "Notice to File Missing Parts" for this application, please submit any corrections to this Filing Receipt with your reply to the Notice. When the USPTO processes the reply to the Notice, the USPTO will generate another Filing Receipt incorporating the requested corrections**

Inventor(s)

Thien Nguyen, Santa Ana, CA;
Tam Thanh Pham, San Francisco, CA;

Applicant(s)

Incept Incorporated, Santa Ana, CA

Assignment For Published Patent Application

Incept Incorporated, Santa Ana, CA

Power of Attorney: None

Domestic Priority data as claimed by applicant

This appln claims benefit of 61/734,939 12/07/2012

Foreign Applications for which priority is claimed (You may be eligible to benefit from the **Patent Prosecution Highway** program at the USPTO. Please see http://www.uspto.gov for more information.) - None.
Foreign application information must be provided in an Application Data Sheet in order to constitute a claim to foreign priority. See 37 CFR 1.55 and 1.76.

If Required, Foreign Filing License Granted: 12/19/2013

The country code and number of your priority application, to be used for filing abroad under the Paris Convention, is **US 14/100,323**

Projected Publication Date: 06/12/2014

Non-Publication Request: No

Early Publication Request: No
**** SMALL ENTITY ****

Title

INTRAORAL DENTAL SUCTION AND ISOLATION SYSTEM

Preliminary Class

433

Statement under 37 CFR 1.55 or 1.78 for AIA (First Inventor to File) Transition Applications: No

PROTECTING YOUR INVENTION OUTSIDE THE UNITED STATES

Since the rights granted by a U.S. patent extend only throughout the territory of the United States and have no effect in a foreign country, an inventor who wishes patent protection in another country must apply for a patent in a specific country or in regional patent offices. Applicants may wish to consider the filing of an international application under the Patent Cooperation Treaty (PCT). An international (PCT) application generally has the same effect as a regular national patent application in each PCT-member country. The PCT process **simplifies** the filing of patent applications on the same invention in member countries, but **does not result** in a grant of "an international patent" and does not eliminate the need of applicants to file additional documents and fees in countries where patent protection is desired.

Almost every country has its own patent law, and a person desiring a patent in a particular country must make an application for patent in that country in accordance with its particular laws. Since the laws of many countries differ in various respects from the patent law of the United States, applicants are advised to seek guidance from specific foreign countries to ensure that patent rights are not lost prematurely.

Applicants also are advised that in the case of inventions made in the United States, the Director of the USPTO must issue a license before applicants can apply for a patent in a foreign country. The filing of a U.S. patent application serves as a request for a foreign filing license. The application's filing receipt contains further information and guidance as to the status of applicant's license for foreign filing.

Applicants may wish to consult the USPTO booklet, "General Information Concerning Patents" (specifically, the section entitled "Treaties and Foreign Patents") for more information on timeframes and deadlines for filing foreign patent applications. The guide is available either by contacting the USPTO Contact Center at 800-786-9199, or it can be viewed on the USPTO website at http://www.uspto.gov/web/offices/pac/doc/general/index.html.

For information on preventing theft of your intellectual property (patents, trademarks and copyrights), you may wish to consult the U.S. Government website, http://www.stopfakes.gov. Part of a Department of Commerce initiative, this website includes self-help "toolkits" giving innovators guidance on how to protect intellectual property in specific countries such as China, Korea and Mexico. For questions regarding patent enforcement issues, applicants may call the U.S. Government hotline at 1-866-999-HALT (1-866-999-4258).

LICENSE FOR FOREIGN FILING UNDER

Title 35, United States Code, Section 184

Title 37, Code of Federal Regulations, 5.11 & 5.15

GRANTED

The applicant has been granted a license under 35 U.S.C. 184, if the phrase "IF REQUIRED, FOREIGN FILING LICENSE GRANTED" followed by a date appears on this form. Such licenses are issued in all applications where the conditions for issuance of a license have been met, regardless of whether or not a license may be required as set forth in 37 CFR 5.15. The scope and limitations of this license are set forth in 37 CFR 5.15(a) unless an earlier license has been issued under 37 CFR 5.15(b). The license is subject to revocation upon written notification. The date indicated is the effective date of the license, unless an earlier license of similar scope has been granted under 37 CFR 5.13 or 5.14.

This license is to be retained by the licensee and may be used at any time on or after the effective date thereof unless it is revoked. This license is automatically transferred to any related applications(s) filed under 37 CFR 1.53(d). This license is not retroactive.

The grant of a license does not in any way lessen the responsibility of a licensee for the security of the subject matter as imposed by any Government contract or the provisions of existing laws relating to espionage and the national security or the export of technical data. Licensees should apprise themselves of current regulations especially with respect to certain countries, of other agencies, particularly the Office of Defense Trade Controls, Department of State (with respect to Arms, Munitions and Implements of War (22 CFR 121-128)); the Bureau of Industry and Security, Department of Commerce (15 CFR parts 730-774); the Office of Foreign AssetsControl, Department of Treasury (31 CFR Parts 500+) and the Department of Energy.

NOT GRANTED

No license under 35 U.S.C. 184 has been granted at this time, if the phrase "IF REQUIRED, FOREIGN FILING LICENSE GRANTED" DOES NOT appear on this form. Applicant may still petition for a license under 37 CFR 5.12, if a license is desired before the expiration of 6 months from the filing date of the application. If 6 months has lapsed from the filing date of this application and the licensee has not received any indication of a secrecy order under 35 U.S.C. 181, the licensee may foreign file the application pursuant to 37 CFR 5.15(b).

SelectUSA

The United States represents the largest, most dynamic marketplace in the world and is an unparalleled location for business investment, innovation, and commercialization of new technologies. The U.S. offers tremendous resources and advantages for those who invest and manufacture goods here. Through SelectUSA, our nation works to promote and facilitate business investment. SelectUSA provides information assistance to the international investor community; serves as an ombudsman for existing and potential investors; advocates on behalf of U.S. cities, states, and regions competing for global investment; and counsels U.S. economic development organizations on investment attraction best practices. To learn more about why the United States is the best country in the world to develop technology, manufacture products, deliver services, and grow your business, visit http://www.SelectUSA.gov or call +1-202-482-6800.

PLUS Search Results for S/N 14100323, Searched Thu May 01 11:26:46 EDT 2014

The Patent Linguistics Utility System (PLUS) is a USPTO automated search system for U.S. Patents from 1971 to the present PLUS is a query-by-example search system which produces a list of patents that are most closely related linguistically to the application searched. This search was prepared by the staff of the Scientific and Technical Information Center, SIRA.

5974616 74
20090126742 74
4468197 71
4806100 71
5022417 71
4559013 70
5488947 70
5807100 70
5846082 70
6079411 70
20080044797 70
6467476 66
5791896 62
20040241610 62
5876201 61
5885078 61
6414139 61
8043091 61
8043091 61
8366442 61
8435034 61
20070190492 61
20080064006 61
20090202961 61
20100119989 61
20100209877 61
20110033823 61
6244866 58
4344182 58
4866750 58
5458486 58
5702249 58
5887754 58
5947727 58
6379155 58
6390819 58
6652276 58
6655960 58
20030082495 58
20040033468 58
20120237902 58
20130218530 58
6109266 57
5323787 57
5860754 57
5967784 57
6015425 57
3577855 57
3669101 57
4064628 57

UNITED STATES PATENT AND TRADEMARK OFFICE

UNITED STATES DEPARTMENT OF COMMERCE
United States Patent and Trademark Office
Address: COMMISSIONER FOR PATENTS
P.O. Box 1450
Alexandria, Virginia 22313-1450
www.uspto.gov

APPLICATION NO.	FILING DATE	FIRST NAMED INVENTOR	ATTORNEY DOCKET NO.	CONFIRMATION NO.
14/100,323	12/09/2013	Thien Nguyen	INCEP-001	5734

28661 7590 05/06/2014
Lewis Roca Rothgerber LLP
2440 W. El Camino Real, 6th Floor
Mountain View, CA 94040

EXAMINER
MAI, HAO D

ART UNIT	PAPER NUMBER
3732	

MAIL DATE	DELIVERY MODE
05/06/2014	PAPER

Please find below and/or attached an Office communication concerning this application or proceeding.

The time period for reply, if any, is set in the attached communication.

Office Action Summary	Application No. 14/100,323	Applicant(s) NGUYEN ET AL.	
	Examiner HAO D. MAI	Art Unit 3732	AIA (First Inventor to File) Status No

-- The MAILING DATE of this communication appears on the cover sheet with the correspondence address --

Period for Reply

A SHORTENED STATUTORY PERIOD FOR REPLY IS SET TO EXPIRE 3 MONTHS FROM THE MAILING DATE OF THIS COMMUNICATION.

- Extensions of time may be available under the provisions of 37 CFR 1.136(a). In no event, however, may a reply be timely filed after SIX (6) MONTHS from the mailing date of this communication.
- If NO period for reply is specified above, the maximum statutory period will apply and will expire SIX (6) MONTHS from the mailing date of this communication.
- Failure to reply within the set or extended period for reply will, by statute, cause the application to become ABANDONED (35 U.S.C. § 133). Any reply received by the Office later than three months after the mailing date of this communication, even if timely filed, may reduce any earned patent term adjustment. See 37 CFR 1.704(b).

Status

1)☒ Responsive to communication(s) filed on *12/09/2013*.

☐ A declaration(s)/affidavit(s) under **37 CFR 1.130(b)** was/were filed on _____.

2a)☐ This action is **FINAL**. 2b)☒ This action is non-final.

3)☐ An election was made by the applicant in response to a restriction requirement set forth during the interview on _____; the restriction requirement and election have been incorporated into this action.

4)☐ Since this application is in condition for allowance except for formal matters, prosecution as to the merits is closed in accordance with the practice under *Ex parte Quayle*, 1935 C.D. 11, 453 O.G. 213.

Disposition of Claims*

5)☒ Claim(s) *1-18* is/are pending in the application.

5a) Of the above claim(s) _____ is/are withdrawn from consideration.

6)☐ Claim(s) _____ is/are allowed.

7)☒ Claim(s) *1-18* is/are rejected.

8)☐ Claim(s) _____ is/are objected to.

9)☐ Claim(s) _____ are subject to restriction and/or election requirement.

* If any claims have been determined allowable, you may be eligible to benefit from the **Patent Prosecution Highway** program at a participating intellectual property office for the corresponding application. For more information, please see http://www.uspto.gov/patents/init_events/pph/index.jsp or send an inquiry to PPHfeedback@uspto.gov.

Application Papers

10)☒ The specification is objected to by the Examiner.

11)☒ The drawing(s) filed on *12/09/2013* is/are: a)☐ accepted or b)☒ objected to by the Examiner.

Applicant may not request that any objection to the drawing(s) be held in abeyance. See 37 CFR 1.85(a).

Replacement drawing sheet(s) including the correction is required if the drawing(s) is objected to. See 37 CFR 1.121(d).

Priority under 35 U.S.C. § 119

12)☐ Acknowledgment is made of a claim for foreign priority under 35 U.S.C. § 119(a)-(d) or (f).

Certified copies:

a)☐ All b)☐ Some** c)☐ None of the:

1.☐ Certified copies of the priority documents have been received.

2.☐ Certified copies of the priority documents have been received in Application No. _____.

3.☐ Copies of the certified copies of the priority documents have been received in this National Stage application from the International Bureau (PCT Rule 17.2(a)).

** See the attached detailed Office action for a list of the certified copies not received.

Attachment(s)

1) ☒ Notice of References Cited (PTO-892)

2) ☐ Information Disclosure Statement(s) (PTO/SB/08a and/or PTO/SB/08b) Paper No(s)/Mail Date _____.

3) ☐ Interview Summary (PTO-413) Paper No(s)/Mail Date. _____ .

4) ☐ Other: _____.

DETAILED ACTION

Drawings

1. The drawings are objected to as failing to comply with 37 CFR 1.84(p)(5) because they do not include the following reference sign(s) mentioned in the description: “strap 310" (Specification, paragraph 43).

2. The drawings are objected to under 37 CFR 1.83(a). The drawings must show every feature of the invention specified in the claims. Therefore, the claimed “a strap configured to fit around the suction connector portion, … wherein an external surface of the strap is substantially flush with a remaining external surface of the suction connector portion when the strap sits in the notch region” (claim 13) must be shown or the feature(s) canceled from the claim(s). No new matter should be entered.

3. Corrected drawing sheets in compliance with 37 CFR 1.121(d) are required in reply to the Office action to avoid abandonment of the application. Any amended replacement drawing sheet should include all of the figures appearing on the immediate prior version of the sheet, even if only one figure is being amended. The figure or figure number of an amended drawing should not be labeled as “amended.” If a drawing figure is to be canceled, the appropriate figure must be removed from the replacement sheet, and where necessary, the remaining figures must be renumbered and appropriate changes made to the brief description of the several views of the drawings for consistency. Additional replacement sheets may be necessary to show the renumbering of the remaining figures. Each drawing sheet submitted after the filing date of an application must be labeled in the top margin as either “Replacement Sheet” or “New Sheet” pursuant to 37 CFR 1.121(d). If the changes are not accepted by the examiner, the applicant will be notified and informed of any required corrective action in the next Office action. The objection to the drawings will not be held in abeyance.

Specification

4. Applicant is reminded of the proper language and format for an abstract of the disclosure.

> The abstract should be in narrative form and generally limited to a single paragraph on a separate sheet within the range of 50 to 150 words. It is important that the abstract not exceed 150 words in length since the space provided for the abstract on the computer tape used by the printer is limited. The form and legal phraseology often used in patent claims, such as "means" and "said," should be avoided. The abstract should describe the disclosure sufficiently to assist readers in deciding whether there is a need for consulting the full patent text for details.
>
> The language should be clear and concise and should not repeat information given in the title. It should avoid using phrases which can be implied, such as, "The disclosure concerns," "The disclosure defined by this invention," "The disclosure describes," etc.

5. The abstract of the disclosure is objected to because it currently contains legal phraseologies, e.g. “comprising”. Correction is required. See MPEP § 608.01(b).

Claim Rejections - 35 USC § 112

6. The following is a quotation of the second paragraph of 35 U.S.C. 112:

> The specification shall conclude with one or more claims particularly pointing out and distinctly claiming the subject matter which the applicant regards as his invention.

7. Claims 7 and 13-16 are rejected under 35 U.S.C. 112, second paragraph, as being indefinite for failing to particularly point out and distinctly claim the subject matter which applicant regards as the invention.

- Claim 7 recites the limitation “the injection-molding” which lacks antecedent basis. Note that claim 7 is dependent on claim 1 which does not define such injection-molding.
- Claim 13 recites “...mouth prop comprises a strap...", and claim 14 recites "the strap is injection-molded in a single piece with the mouth prop". It is not clear whether the strap is a different element from the mouth prop or the strap itself is the mouth prop.
- Claim 15 recites “the strap” (line 3), which lacks antecedent basis. Claim 16 is dependent on claim 15 and therefore is rejected herein under this same issue.

Claim Rejections - 35 USC § 102

8. The following is a quotation of the appropriate paragraphs of 35 U.S.C. 102 that form the basis for the rejections under this section made in this Office action:

> A person shall be entitled to a paten unless – (b) the invention was patented or described in a printed publication in this or a foreign country or in public use or on sale in this country, more than one year prior to the date of application for patent in the United States.

9. **Claim 1-6, 8, 11-12, and 17-18, are rejected under 35 U.S.C. 102(b) as anticipated by Rhoades (4,802,851).**

Regarding claim 1, Rhoades discloses a dental mouthpiece 50 composed of a material (column 6 lines 21-27), the dental mouthpiece 50 comprising: a main body portion 50 comprising a defined pocket (i.e. interior of 50) having an anterior wall 52, a posterior wall 52, and a side wall 58, 60 in between the anterior wall and the posterior wall 52, wherein the anterior wall, the posterior wall, and the side wall define an interior portion of the defined pocket (Figs. 1-2). The mouthpiece 50 further comprises a cheek retractor portion, i.e. side scallops 56, capable of pressing against a cheek of a patient when placed in a mouth of the patient. Note that Rhoades discloses the mouthpiece 50 being formed of resilient elastomeric material (column 6 lines 21-27); therefore there is a resilience of such material which is capable of causing the cheek retractor portion (side scallops 56) to retract a cheek of the patient away from the teeth of the patient. Note a suction connector portion 62 capable of connecting the interior portion of the main body to a vacuum suction source (Fig. 1; column 3 lines 35-37, 48-50).

As to claims 2-3, the side, anterior, and posterior walls, are shown having a plurality of perforations 54. Note that Fig. 1 shows two angled phantom lines, the outside of which form is considered to be portions of the side wall. There are some perforations 54 shown disposed outside of the angled phantom lines; such perforations 54 are therefore considered to be disposed on the side wall. Furthermore, note embodiment of Fig. 4 showing an alternative

side/end wall which include perforations 84 (Fig. 4). **As to claim 4**, either a groove between two scallops 56 on the anterior wall, or one of the perforation formed within such groove, is considered to be the claimed slit formed along a central axis of the anterior wall. **As to claim 5**, note that stability bar (stud 140; Fig. 11; column 5 line 13-15) protruding from an interior surface of the posterior, wherein the thickness of the stability bar is capable increases resilience of the cheek retractor portion.

As to claim 6, note that the claim language "by injection-molded" is a product-by-process recitation in a product claim. Even though product-by-process recitation is limited by and defined by the recited process, determination of patentability is based on the product itself. The patentability of a product does not depend on its method of production. If the product in the product-by-process claim is the same as or obvious from a product of the prior art, the claim is unpatentable even though the prior product was made by a different process. *In re Thorpe,* 777 F.2d 695, 227 USPQ 964 (Fed. Cir. 1985). In this case, Rhoades discloses the end product and the structures thereof as claimed as detailed above; the device shown comprised of the main body, cheek retractor portion, and suction connection portion, all of which are essential portions forming the device as one piece. The burden is shifted to applicant to show an unobvious difference between Rhoades' device and the invention that would have resulted from the injection molding process.

As to claim 8, note that the studs 140 are alternatively considered to be equivalent to the claimed bridge structure protruding from an interior surface of the posterior wall having a plurality of contact points (i.e. pair of studs 140 are spaced apart), capable of keeping the anterior and posterior walls separated during suction. **As to claim 11**, the suction connector portion 62 is shown having an internal stop 74 capable of assisting in positioning of a vacuum suction source (Fig. 1). **As to claim 12**, note the optional detachable mouth prop 82 (Fig. 3).

As to claim 17, note the cutout (i.e. hollow interior and exterior periphery) at the suction connector portion 62, which corresponds to the vacuum adapter 70 for an interlocking fit (Fig. 1). **As to claim 18**, the scallops 56 formed thereon the anterior and posterior walls make the walls having different thicknesses (Fig. 1).

Claim Rejections - 35 USC § 103

10. The following is a quotation of 35 U.S.C. 103(a) which forms the basis for all obviousness rejections set forth in this Office action:

> (a) A patent may not be obtained though the invention is not identically disclosed or described as set forth in section 102 of this title, if the differences between the subject matter sought to be patented and the prior art are such that the subject matter as a whole would have been obvious at the time the invention was made to a person having ordinary skill in the art to which said subject matter pertains. Patentability shall not be negatived by the manner in which the invention was made.

11. **Claim 7 is rejected under 35 U.S.C. 103(a) as being unpatentable over Rhoades in view of Sclafani (5,890,899).** Rhoades discloses the invention substantially as claimed including the material used to form the device being flexible, translucent, high heat-resistant, as evidenced by disclosure of sterilization for reuse (column 5 lines 20-21; column 6 lines 21-27). However, Rhoades fails to disclose the material being silicone-base. Sclafani discloses a dental suction isolator device formed of silicone-based material (Figs. 1-9, column 8 lines 10-15). It would have been obvious to one having ordinary skill in the art at the time the invention was made to make Rhoades' device from silicone-based material as taught by Sclafani to be a known alternative suitable known material while yielding the same and/or predictable results.

12. **Claims 8-10 are rejected under 35 U.S.C. 103(a) as being unpatentable over Rhoades in view of Black (2009/0274991).** Rhoades discloses the invention substantially as claimed except for wave-shaped bridge structure. Black et al. discloses an intraoral suction device comprising a wave-shaped bridge structure 48c having formed therein the interior wall of

the device 40 (Fig. 3B; paragraph 80). Note that the troughs between bridges/transverse walls 48c allow for communication with the suction source. It would have been obvious to one having ordinary skill in the art at the time the invention was made to modify Rhoades by forming such bridge/transverse walls therein the interior of the intraoral device as taught by Black et al. in order to reinforce the device while still allowing effective suction.

Conclusion

13. The prior art made of record and not relied upon is considered pertinent to applicant's disclosure. Any inquiry concerning this communication or earlier communications from the examiner should be directed to Examiner Hao D. Mai whose telephone number is (571) 270-3002. The examiner can normally be reached on Monday-Friday 8:00AM – 4:30PM. If attempts to reach the examiner by telephone are unsuccessful, please contact the examiner's supervisor, Cris Rodriguez, at (571) 272-4964. The fax phone number for the organization where this application or proceeding is assigned is 571-273-8300.

14. Information regarding the status of an application may be obtained from the Patent Application Information Retrieval (PAIR) system. Status information for published applications may be obtained from either Private PAIR or Public PAIR. Status information for unpublished applications is available through Private PAIR only. For more information about the PAIR system, see http://pair-direct.uspto.gov. Should you have questions on access to the Private PAIR system, contact the Electronic Business Center (EBC) at 866-217-9197 (toll-free). If you would like assistance from a USPTO Customer Service Representative or access to the automated information system, call 800-786-9199 (IN USA OR CANADA) or 571-272-1000.

/Hao D Mai/
Examiner, Art Unit 3732

Notice of References Cited	Application/Control No. 14/100,323	Applicant(s)/Patent Under Reexamination NGUYEN ET AL.	
	Examiner HAO D. MAI	Art Unit 3732	Page 1 of 2

U.S. PATENT DOCUMENTS

*		Document Number Country Code-Number-Kind Code	Date MM-YYYY	Name	Classification
*	A	US-3,090,122 A	05-1963	ERICKSON NORMAN R	433/93
*	B	US-3,802,081 A	04-1974	Rogers, Winston L.	433/93
*	C	US-3,877,691 A	04-1975	Foster, Beatrice D.	5/600
*	D	US-4,017,975 A	04-1977	Johnson, Wesley Grant	433/94
*	E	US-4,192,071 A	03-1980	Erickson, Norman	433/93
*	F	US-4,718,662 A	01-1988	North, Richard B.	482/11
*	G	US-4,802,851 A	02-1989	Rhoades, Clark J.	433/93
*	H	US-5,078,602 A	01-1992	Honoshofsky, Geraldine	433/91
*	I	US-5,890,899 A	04-1999	Sclafani, Adam	433/140
*	J	US-D495,799 S	09-2004	Hirsch et al.	D24/152
*	K	US-6,974,321 B2	12-2005	Hirsch et al.	433/93
*	L	US-7,293,990 B2	11-2007	Hirsch et al.	433/93
*	M	US-2008/0166684 A1	07-2008	Kanas, David C.	433/93

FOREIGN PATENT DOCUMENTS

*		Document Number Country Code-Number-Kind Code	Date MM-YYYY	Country	Name	Classification
	N					
	O					
	P					
	Q					
	R					
	S					
	T					

NON-PATENT DOCUMENTS

*		Include as applicable: Author, Title Date, Publisher, Edition or Volume, Pertinent Pages)
	U	
	V	
	W	
	X	

*A copy of this reference is not being furnished with this Office action. (See MPEP § 707.05(a).)
Dates in MM-YYYY format are publication dates. Classifications may be US or foreign.

Notice of References Cited	Application/Control No. 14/100,323	Applicant(s)/Patent Under Reexamination NGUYEN ET AL.	
	Examiner HAO D. MAI	Art Unit 3732	Page 2 of 2

U.S. PATENT DOCUMENTS

*		Document Number Country Code-Number-Kind Code	Date MM-YYYY	Name	Classification
*	A	US-2008/0318183 A1	12-2008	Suzman, Colin	433/93
*	B	US-2009/0123886 A1	05-2009	Vaska, Matthias	433/27
*	C	US-7,611,354 B2	11-2009	Hirsch, James A.	433/93
*	D	US-2009/0274991 A1	11-2009	Black et al.	433/93
*	E	US-7,748,981 B2	07-2010	Hirsch et al.	433/93
*	F	US-2011/0311942 A1	12-2011	Black et al.	433/93
	G	US-			
	H	US-			
	I	US-			
	J	US-			
	K	US-			
	L	US-			
	M	US-			

FOREIGN PATENT DOCUMENTS

*		Document Number Country Code-Number-Kind Code	Date MM-YYYY	Country	Name	Classification
	N					
	O					
	P					
	Q					
	R					
	S					
	T					

NON-PATENT DOCUMENTS

*		Include as applicable: Author, Title Date, Publisher, Edition or Volume, Pertinent Pages)
	U	
	V	
	W	
	X	

*A copy of this reference is not being furnished with this Office action. (See MPEP § 707.05(a).)
Dates in MM-YYYY format are publication dates. Classifications may be US or foreign.

Index of Claims	Application/Control No.	Applicant(s)/Patent Under Reexamination
	14100323	NGUYEN ET AL.
	Examiner	**Art Unit**
	HAO D MAI	3732

✓	Rejected	-	Cancelled	N	Non-Elected	A	Appeal
=	Allowed	÷	Restricted	I	Interference	O	Objected

☐ Claims renumbered in the same order as presented by applicant ☐ CPA ☐ T.D. ☐ R.1.47

CLAIM		DATE								
Final	Original	05/05/2014								
	1	✓								
	2	✓								
	3	✓								
	4	✓								
	5	✓								
	6	✓								
	7	✓								
	8	✓								
	9	✓								
	10	✓								
	11	✓								
	12	✓								
	13	✓								
	14	✓								
	15	✓								
	16	✓								
	17	✓								
	18	✓								

Search Notes	Application/Control No.	Applicant(s)/Patent Under Reexamination
	14100323	NGUYEN ET AL.
	Examiner	**Art Unit**
	HAO D MAI	3732

CPC- SEARCHED

Symbol	Date	Examiner

CPC COMBINATION SETS - SEARCHED

Symbol	Date	Examiner

US CLASSIFICATION SEARCHED

Class	Subclass	Date	Examiner
433	91-96, 140, 229	05/05/2014	HDM

SEARCH NOTES

Search Notes	Date	Examiner
Inventor Search	05/05/2014	HDM
Plus Search	05/05/2014	HDM

INTERFERENCE SEARCH

US Class/ CPC Symbol	US Subclass / CPC Group	Date	Examiner

UNITED STATES PATENT AND TRADEMARK OFFICE

UNITED STATES DEPARTMENT OF COMMERCE
United States Patent and Trademark Office
Address: COMMISSIONER FOR PATENTS
P.O. Box 1450
Alexandria, Virginia 22313-1450
www.uspto.gov

BIB DATA SHEET

CONFIRMATION NO. 5734

SERIAL NUMBER	FILING or 371(c) DATE	CLASS	GROUP ART UNIT	ATTORNEY DOCKET NO.
14/100,323	12/09/2013 **RULE**	433	3732	INCEP-001

APPLICANTS
Incept Incorporated, Santa Ana, CA, Assignee (with 37 CFR 1.172 Interest);

INVENTORS
Thien Nguyen, Santa Ana, CA;
Tam Thanh Pham, San Francisco, CA;

**** CONTINUING DATA ***************************
This appln claims benefit of 61/734,939 12/07/2012

**** FOREIGN APPLICATIONS ***************************

**** IF REQUIRED, FOREIGN FILING LICENSE GRANTED **** ** SMALL ENTITY **
12/19/2013

Foreign Priority claimed	☐ Yes ☑ No		STATE OR COUNTRY	SHEETS DRAWINGS	TOTAL CLAIMS	INDEPENDENT CLAIMS
35 USC 119(a-d) conditions met	☐ Yes ☐ No	☐ Met after Allowance				
Verified and Acknowledged	/HAO D MAI/ Examiner's Signature	/HDM/ Initials	CA	11	18	1

ADDRESS
Lewis Roca Rothgerber LLP
2440 W. El Camino Real, 6th Floor
Mountain View, CA 94040
UNITED STATES

TITLE
INTRAORAL DENTAL SUCTION AND ISOLATION SYSTEM

FILING FEE RECEIVED		
800	FEES: Authority has been given in Paper No._____ to charge/credit DEPOSIT ACCOUNT No._____ for following:	☐ All Fees ☐ 1.16 Fees (Filing) ☐ 1.17 Fees (Processing Ext. of time) ☐ 1.18 Fees (Issue) ☐ Other _____ ☐ Credit

Substitute for Form 1449/PTO				Complete if Known	
INFORMATION DISCLOSURE STATEMENT BY APPLICANT (use as many sheets as necessary)				Application Number	14/100,323
				Filing Date	December 9, 2013
				First Named Inventor:	Thien Nguyen
				Art Unit	3732
				Examiner Name	Hao D. Mai
Sheet	1	**of**	1	Attorney Docket Number	INCEP-001

U.S. PATENT DOCUMENTS

Examiner Initials*	Cite No.[1]	Document Number Number-Kind Code[2] (If known)		Publication Date MM-DD-YYYY	Name of Patentee or Applicant of Cited Document	Pages, Columns, Lines, Where Relevant Passages or Relevant Figures Appear
		US-	D497,426	10/19/2004	Hirsch et al.	
		US-	D615,203	5/4/2010	Hirsch et al.	
		US-	D696,779	12/31/2013	Hirsch et al.	
		US-	6,022,214	2/8/2000	Hirsch et al.	
		US-	6,338,627	1/15/2002	Hirsch et al.	
		US-	6,575,746	6/10/2003	Hirsch et al.	
		US-	6,908,308	6/21/2005	Hirsch et al.	
		US-	7,287,981	10/30/2007	Hirsch	
		US-	8,057,227	11/15/2011	Hirsch et al.	
		US-	8,057,228	11/15/2011	Hirsch et al.	
		US-	8,075,310	12/13/2011	Hirsch et al.	
		US-	8,297,973	10/30/2012	Hirsch et al.	
		US-	8,529,256	9/10/2013	Hirsch et al.	
		US-	2011/0207076	8/25/2011	Hirsch et al.	
		US-				
		US-				
		US-				
		US-				
		US-				
		US-				
		US-				
		US-				
		US-				
		US-				
		US-				
		US-				
		US-				
		US-				
		US-				
		US-				

Examiner Signature		Date Considered	

*EXAMINER: Initial if reference considered, whether or not citation is in conformance with MPEP 609; Draw line through citation if not in conformance and not considered. Include copy of this form with next communication to applicant. [1]Applicant's unique citation designation number (optional). [2]See Kinds Codes of USPTO Patent Documents at www.uspto.gov or MPEP 901.04. [3]Enter Office that issued the document, by the two-letter code (WIPO Standard ST.3). [4]For Japanese patent documents, the indication of the year of reign of the Emperor must precede the serial number of the patent document. [5]Kind of document by the appropriate symbols as indicated on the document under WIPO Standard ST. 16 if possible. [6]Applicant is to place a check mark here if English language translation is attached.

This collection of information is required by 37 CFR 1.97 and 1.98. The information is required to obtain or retain a benefit by the public which is to file (and by the USPTO to process) an application. Confidentiality is governed by 35 U.S.C. 122 and 37 CFR 1.14. This collection is estimated to take 2 hours to complete including gathering, preparing, and submitting the completed application form to the USPTO. Time will vary depending upon the individual case. Any comments on the amount of time you require to complete this form and/or suggestions for reducing this burden, should be sent to the Chief Information Officer, U.S. Patent and Trademark Office, P.O. Box 1450, Alexandria, VA 22313-1450. DO NOT SENT FEES OR COMPLETED FORMS TO THIS ADDRESS.

SEND TO: Commissioner for Patents, P.O. Box 1450, Alexandria, Virginia 22313-1450.

If you need assistance in completing the form, call 1-800-PTO-9199 (1-800-786-9199) and select option 2.

Based on Form PTO/SB/08A (08-03)

Electronic Patent Application Fee Transmittal

Application Number:	14100323
Filing Date:	09-Dec-2013
Title of Invention:	INTRAORAL DENTAL SUCTION AND ISOLATION SYSTEM
First Named Inventor/Applicant Name:	Thien Nguyen
Filer:	TamThanh Thi Pham/Lea Fong
Attorney Docket Number:	INCEP-001

Filed as Small Entity

Utility under 35 USC 111(a) Filing Fees

Description	Fee Code	Quantity	Amount	Sub-Total in USD($)
Basic Filing:				
Pages:				
Claims:				
Miscellaneous-Filing:				
Petition:				
Patent-Appeals-and-Interference:				
Post-Allowance-and-Post-Issuance:				
Extension-of-Time:				

Description	Fee Code	Quantity	Amount	Sub-Total in USD($)
Miscellaneous:				
Submission- Information Disclosure Stmt	2806	1	90	90
		Total in USD ($)		**90**

Electronic Acknowledgement Receipt

EFS ID:	18996119
Application Number:	14100323
International Application Number:	
Confirmation Number:	5734
Title of Invention:	INTRAORAL DENTAL SUCTION AND ISOLATION SYSTEM
First Named Inventor/Applicant Name:	Thien Nguyen
Customer Number:	28661
Filer:	TamThanh Thi Pham/Lea Fong
Filer Authorized By:	TamThanh Thi Pham
Attorney Docket Number:	INCEP-001
Receipt Date:	13-MAY-2014
Filing Date:	09-DEC-2013
Time Stamp:	09:21:31
Application Type:	Utility under 35 USC 111(a)

Payment information:

Submitted with Payment	yes
Payment Type	Deposit Account
Payment was successfully received in RAM	$90
RAM confirmation Number	10725
Deposit Account	500612
Authorized User	

The Director of the USPTO is hereby authorized to charge indicated fees and credit any overpayment as follows:

Charge any Additional Fees required under 37 C.F.R. Section 1.16 (National application filing, search, and examination fees)

Charge any Additional Fees required under 37 C.F.R. Section 1.17 (Patent application and reexamination processing fees)

Charge any Additional Fees required under 37 C.F.R. Section 1.19 (Document supply fees)

Charge any Additional Fees required under 37 C.F.R. Section 1.20 (Post Issuance fees)

Charge any Additional Fees required under 37 C.F.R. Section 1.21 (Miscellaneous fees and charges)

File Listing:

Document Number	Document Description	File Name	File Size(Bytes)/ Message Digest	Multi Part /.zip	Pages (if appl.)
1	Transmittal Letter	INCEP-001_IDS_Statement_5-12-14.pdf	19480 2b4a60e76be14411234fda32d2d8365e9a61ee79	no	2
Warnings:					
Information:					
2	Transmittal Letter	INCEP-001_IDS_List_of_Copending_Apps_5-12-14.pdf	19956 5839ed13c23c590932d98eac488ce97d9c54a6d0	no	2
Warnings:					
Information:					
3	Information Disclosure Statement (IDS) Form (SB08)	INCEP-001_IDS_1449_5-12-14.pdf	42279 ca5bf2ba4d7dac5ac6d3904d38c94a593f0c9914	no	1
Warnings:					
Information:					
This is not an USPTO supplied IDS fillable form					
4	Fee Worksheet (SB06)	fee-info.pdf	30017 0ea653c5dd3ce0eb9fab10f83e0d2c58c3782026	no	2
Warnings:					
Information:					
			Total Files Size (in bytes):	111732	

This Acknowledgement Receipt evidences receipt on the noted date by the USPTO of the indicated documents, characterized by the applicant, and including page counts, where applicable. It serves as evidence of receipt similar to a Post Card, as described in MPEP 503.

<u>New Applications Under 35 U.S.C. 111</u>
If a new application is being filed and the application includes the necessary components for a filing date (see 37 CFR 1.53(b)-(d) and MPEP 506), a Filing Receipt (37 CFR 1.54) will be issued in due course and the date shown on this Acknowledgement Receipt will establish the filing date of the application.

<u>National Stage of an International Application under 35 U.S.C. 371</u>
If a timely submission to enter the national stage of an international application is compliant with the conditions of 35 U.S.C. 371 and other applicable requirements a Form PCT/DO/EO/903 indicating acceptance of the application as a national stage submission under 35 U.S.C. 371 will be issued in addition to the Filing Receipt, in due course.

<u>New International Application Filed with the USPTO as a Receiving Office</u>
If a new international application is being filed and the international application includes the necessary components for an international filing date (see PCT Article 11 and MPEP 1810), a Notification of the International Application Number and of the International Filing Date (Form PCT/RO/105) will be issued in due course, subject to prescriptions concerning national security, and the date shown on this Acknowledgement Receipt will establish the international filing date of the application.

IN THE UNITED STATES PATENT AND TRADEMARK OFFICE

Group Art Unit: 3732 Examiner: Hao D. Mai

Serial No.: 14/100,323 Filed: December 9, 2013

In re Application of: Thien Nguyen

Confirmation No.: 5734 Customer No.: 28661

Title: INTRAORAL DENTAL SUCTION AND ISOLATION SYSTEM

INFORMATION DISCLOSURE STATEMENT
Under 37 C.F.R. § 1.56, and 1.97-1.98

SIR:

Pursuant to the provisions of 37 C.F.R. §§ 1.56 and 1.97-98 of the Rules of Practice in Patent Cases, enclosed herewith is form PTO-SB-08, listing several references. The Examiner is requested to make these references of official record in the application.

The references cited may be material to examination of the application and are submitted in compliance with the Applicants' duty of disclosure as defined by 37 C.F.R. § 1.56.

No representation is made or intended as to the completeness of this list, nor is the inclusion of any reference on this list an admission that it is prior art or pertinent to this application.

The Commissioner is hereby authorized to charge any necessary fee to Account Number 50-0612.

Respectfully submitted,
LEWIS ROCA ROTHGERBER LLP

Dated: May 12, 2014

/Tam Thanh Pham/
Tam Thanh Pham (50,565)
LEWIS ROCA ROTHGERBER LLP
2440 W. El Camino Real, 6th Floor
Mountain View, California 94040
TEL (650) 391-1380
ipdockets@lrrlaw.com

IN THE UNITED STATES PATENT AND TRADEMARK OFFICE

Group Art Unit: 3732 Examiner: Hao D. Mai

Serial No.: 14/100,323 Filed: December 9, 2013

In re Application of: Thien Nguyen

Confirmation No.: 5734 Customer No.: 28661

Title: INTRAORAL DENTAL SUCTION AND ISOLATION SYSTEM

List of Co-Pending Patents or Patent Applications That May Be Directed Towards Similar Subject Matter

Examiner's Initials	Application Number	Docket Number	First-Named Inventor	Title	Filing Date
	14/228,046	INCEP-001COA	Thien Nguyen	INTRAORAL DEVICE WITH MESH	March 27, 2014
	14/228,050	INCEP-001COB	Thien Nguyen	INTRAORAL DEVICE WITH BRIDGE	March 27, 2014
	14/228,054	INCEP-001COC	Thien Nguyen	INTRAORAL DEVICE WITH STABILITY START	March 27, 2014
	14/228,057	INCEP-001COD	Thien Nguyen	INTRAORAL DEVICE WITH SLIT	March 27, 2014
	14/228,061	INCEP-001COE	Thien Nguyen	INTRAORAL DEVICE WITH DETACHABLE MOUTH PROP	March 27, 2014
Examiner's Signature:					Date:

The Commissioner is hereby authorized to charge any necessary fee to Account Number 50-0612.

Respectfully submitted,
LEWIS ROCA ROTHGERBER LLP

Dated: May 12, 2014

/Tam Thanh Pham/

Tam Thanh Pham (50,565)
LEWIS ROCA ROTHGERBER LLP
2440 W. El Camino Real, 6th Floor
Mountain View, California 94040
TEL (650) 391-1380
ipdockets@lrrlaw.com

UNITED STATES PATENT AND TRADEMARK OFFICE

UNITED STATES DEPARTMENT OF COMMERCE
United States Patent and Trademark Office
Address: COMMISSIONER FOR PATENTS
P.O. Box 1450
Alexandria, Virginia 22313-1450
www.uspto.gov

APPLICATION NO.	FILING DATE	FIRST NAMED INVENTOR	ATTORNEY DOCKET NO.	CONFIRMATION NO.
14/100,323	12/09/2013	Thien Nguyen	INCEP-001	5734

28661 7590 05/16/2014
Lewis Roca Rothgerber LLP
2440 W. El Camino Real, 6th Floor
Mountain View, CA 94040

EXAMINER
MAI, HAO D

ART UNIT	PAPER NUMBER
3732	

MAIL DATE	DELIVERY MODE
05/16/2014	PAPER

Please find below and/or attached an Office communication concerning this application or proceeding.

The time period for reply, if any, is set in the attached communication.

Applicant-Initiated Interview Summary	Application No.	Applicant(s)	
	14/100,323	NGUYEN ET AL.	
	Examiner	Art Unit	
	HAO D. MAI	3732	

All participants (applicant, applicant's representative, PTO personnel):

(1) *Hao D. Mai*. (3)_____.

(2) *Tam Pham*. (4)_____.

Date of Interview: *14 May 2014*.

Type: ☒ Telephonic ☐ Video Conference
☐ Personal [copy given to: ☐ applicant ☐ applicant's representative]

Exhibit shown or demonstration conducted: ☐ Yes ☒ No.
If Yes, brief description: _____.

Issues Discussed ☐101 ☐112 ☒102 ☐103 ☐Others
(For each of the checked box(es) above, please describe below the issue and detailed description of the discussion)

Claim(s) discussed: *1*.

Identification of prior art discussed: *Rhoades*.

Substance of Interview
(For each issue discussed, provide a detailed description and indicate if agreement was reached. Some topics may include: identification or clarification of a reference or a portion thereof, claim interpretation, proposed amendments, arguments of any applied references etc...)

Applicant discussed proposed claim language (attached herein). However, the examiner maintains that such proposed claim language "configured to protect a back of a mouth of a patient when postioned to rest against a roof of the mouth and against a bottom of the mouth…" is functional or intended use claim language and would NOT overcome the current ground(s) of rejection under Rhoades because Rhoades' device is CAPABLE of performing such proposed claimed function(s). See MPEP 2114 and 2173.05 (g). In re Schreiber, 128 F.3d 1473, 1477-78, 44 USPQ2d 1429, 1431-32 (Fed. Cir. 1997) and Ex parte Masham, 2 USPQ2d 1647 (Bd. Pat. App. & Inter. 1987). Applicant was suggest to recite structural limitations that would clearly distinguish the invention from Rhoades .

Applicant recordation instructions: The formal written reply to the last Office action must include the substance of the interview. (See MPEP section 713.04). If a reply to the last Office action has already been filed, applicant is given a non-extendable period of the longer of one month or thirty days from this interview date, or the mailing date of this interview summary form, whichever is later, to file a statement of the substance of the interview

Examiner recordation instructions: Examiners must summarize the substance of any interview of record. A complete and proper recordation of the substance of an interview should include the items listed in MPEP 713.04 for complete and proper recordation including the identification of the general thrust of each argument or issue discussed, a general indication of any other pertinent matters discussed regarding patentability and the general results or outcome of the interview, to include an indication as to whether or not agreement was reached on the issues raised.

☒ Attachment

/HAO D MAI/
Examiner, Art Unit 3732

Summary of Record of Interview Requirements

Manual of Patent Examining Procedure (MPEP), Section 713.04, Substance of Interview Must be Made of Record
A complete written statement as to the substance of any face-to-face, video conference, or telephone interview with regard to an application must be made of record in the application whether or not an agreement with the examiner was reached at the interview.

Title 37 Code of Federal Regulations (CFR) § 1.133 Interviews
Paragraph (b)

In every instance where reconsideration is requested in view of an interview with an examiner, a complete written statement of the reasons presented at the interview as warranting favorable action must be filed by the applicant. An interview does not remove the necessity for reply to Office action as specified in §§ 1.111, 1.135. (35 U.S.C. 132)

37 CFR §1.2 Business to be transacted in writing.
All business with the Patent or Trademark Office should be transacted in writing. The personal attendance of applicants or their attorneys or agents at the Patent and Trademark Office is unnecessary. The action of the Patent and Trademark Office will be based exclusively on the written record in the Office. No attention will be paid to any alleged oral promise, stipulation, or understanding in relation to which there is disagreement or doubt.

The action of the Patent and Trademark Office cannot be based exclusively on the written record in the Office if that record is itself incomplete through the failure to record the substance of interviews.

It is the responsibility of the applicant or the attorney or agent to make the substance of an interview of record in the application file, unless the examiner indicates he or she will do so. It is the examiner's responsibility to see that such a record is made and to correct material inaccuracies which bear directly on the question of patentability.

Examiners must complete an Interview Summary Form for each interview held where a matter of substance has been discussed during the interview by checking the appropriate boxes and filling in the blanks. Discussions regarding only procedural matters, directed solely to restriction requirements for which interview recordation is otherwise provided for in Section 812.01 of the Manual of Patent Examining Procedure, or pointing out typographical errors or unreadable script in Office actions or the like, are excluded from the interview recordation procedures below. Where the substance of an interview is completely recorded in an Examiners Amendment, no separate Interview Summary Record is required.

The Interview Summary Form shall be given an appropriate Paper No., placed in the right hand portion of the file, and listed on the "Contents" section of the file wrapper. In a personal interview, a duplicate of the Form is given to the applicant (or attorney or agent) at the conclusion of the interview. In the case of a telephone or video-conference interview, the copy is mailed to the applicant's correspondence address either with or prior to the next official communication. If additional correspondence from the examiner is not likely before an allowance or if other circumstances dictate, the Form should be mailed promptly after the interview rather than with the next official communication.

The Form provides for recordation of the following information:
- Application Number (Series Code and Serial Number)
- Name of applicant
- Name of examiner
- Date of interview
- Type of interview (telephonic, video-conference, or personal)
- Name of participant(s) (applicant, attorney or agent, examiner, other PTO personnel, etc.)
- An indication whether or not an exhibit was shown or a demonstration conducted
- An identification of the specific prior art discussed
- An indication whether an agreement was reached and if so, a description of the general nature of the agreement (may be by attachment of a copy of amendments or claims agreed as being allowable). Note: Agreement as to allowability is tentative and does not restrict further action by the examiner to the contrary.
- The signature of the examiner who conducted the interview (if Form is not an attachment to a signed Office action)

It is desirable that the examiner orally remind the applicant of his or her obligation to record the substance of the interview of each case. It should be noted, however, that the Interview Summary Form will not normally be considered a complete and proper recordation of the interview unless it includes, or is supplemented by the applicant or the examiner to include, all of the applicable items required below concerning the substance of the interview.

A complete and proper recordation of the substance of any interview should include at least the following applicable items:
1) A brief description of the nature of any exhibit shown or any demonstration conducted,
2) an identification of the claims discussed,
3) an identification of the specific prior art discussed,
4) an identification of the principal proposed amendments of a substantive nature discussed, unless these are already described on the Interview Summary Form completed by the Examiner,
5) a brief identification of the general thrust of the principal arguments presented to the examiner,
   (The identification of arguments need not be lengthy or elaborate. A verbatim or highly detailed description of the arguments is not required. The identification of the arguments is sufficient if the general nature or thrust of the principal arguments made to the examiner can be understood in the context of the application file. Of course, the applicant may desire to emphasize and fully describe those arguments which he or she feels were or might be persuasive to the examiner.)
6) a general indication of any other pertinent matters discussed, and
7) if appropriate, the general results or outcome of the interview unless already described in the Interview Summary Form completed by the examiner.

Examiners are expected to carefully review the applicant's record of the substance of an interview. If the record is not complete and accurate, the examiner will give the applicant an extendable one month time period to correct the record.

Examiner to Check for Accuracy

If the claims are allowable for other reasons of record, the examiner should send a letter setting forth the examiner's version of the statement attributed to him or her. If the record is complete and accurate, the examiner should place the indication, "Interview Record OK" on the paper recording the substance of the interview along with the date and the examiner's initials.

Proposed claim language for interview discussion purpose only
DO NOT ENTER /HDM/ 05/14/2014

IN THE UNITED STATES PATENT AND TRADEMARK OFFICE

APPLICANT(S):	Nguyen et al.
APPLICATION NO.:	14/100,323
FILING DATE:	December 9, 2013
TITLE:	Intraoral Dental Suction and Isolation System
ART UNIT:	3732
CONFIRM. NO.:	5734
ATTY.DKT.NO.:	INCEP-001

Interview: Wednesday, May 14, 2014 11 AM Pacific/2 PM Eastern

AGENDA FOR INTERVIEW

Examiner Mai:

This is an agenda for an Examiner Interview scheduled for May 14, 2014. We would like to discuss the following topics:

A proposed amendment independent claim 1 as follows:

> 1. (currently amended) A dental mouthpiece composed of a material, the dental mouthpiece comprising:
>
> a main body portion <u>configured to protect a back of a mouth of a patient when positioned to rest against a roof of the mouth and against a bottom of the mouth, the main body portion</u> comprising a defined pocket having an anterior wall, a posterior wall, and a side wall in between the anterior wall and the posterior wall, wherein the anterior wall, the posterior wall, and the side wall define an interior portion of the defined pocket;
>
> a cheek retractor portion configured to press against a cheek of [[a]] <u>the</u> patient when placed in [[a]] <u>the</u> mouth of the patient, wherein resilience of the material causes the cheek retractor portion to retract a cheek of the patient away from the teeth of the patient; and
>
> a suction connector portion for connecting the interior portion of the main body to a vacuum suction source.

Support in the specification provides:

> Superior may be used herein to refer to the side that rests against a roof of a patient's mouth when placed therein, and inferior may be used to refer to the side that rests against the floor of the patient's mouth.
> …
> When in use, the respective sides of the main body portion 110 may serve to protect and separate the top of the mouth and the bottom of the mouth/tongue. In addition, the main body portion 110 may also serve to protect the back of the mouth (*e.g.*, throat and airway) from falling debris.

Specification, [0033]. In addition, FIG. 1B is provided below for reference.

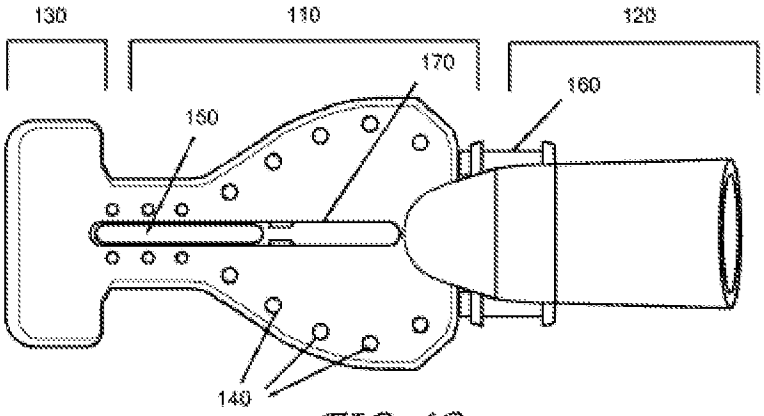

FIG. 1B

Such a mouthpiece is configured to be positioned in the mouth such that one side of the main body 110 rests against a roof of the mouth and the other side rests against the bottom of the mouth. (The cheek retractor portion 130 presses against a cheek, and the suction connector portion 120 may extend out of the side of the mouth opposite the cheek.)

As such, the main body portion 110 acts as a barrier to protect the back of the mouth (including throat and airway) from debris from the front of the mouth. A portion capable of acting as such a barrier is absent from the cited prior art references.

The Applicants thank the Examiner for granting the Interview. The Examiner is invited to contact the Applicants' undersigned representative with any questions.

Respectfully submitted,
Nguyen et al.

May 12, 2014

By: /Tam Thanh Pham/

Tam Thanh Pham, Reg. No. 50,565
Lewis Roca Rothgerber *LLP*
2440 W. El Camino Real, 6th Floor
Mountain View, CA
(T) 650.391.1386
(F) 650.391.1395
DocketsIP@lrrlaw.com

PTO/AIA/80 (07-12)
Approved for use through 11/30/2014. OMB 0651-0035
U.S. Patent and Trademark Office; U.S DEPARTMENT OF COMMERCE
Under the Paperwork Reduction Act of 1995, no persons are required to respond to a collection of information unless it displays a valid OMB control number.

POWER OF ATTORNEY TO PROSECUTE APPLICATIONS BEFORE THE USPTO

I hereby revoke all previous powers of attorney given in the application identified in the attached statement under 37 CFR 3.73(c).

I hereby appoint:

[■] Practitioners associated with Customer Number: 28661

OR

[ ] Practitioner(s) named below (if more than ten patent practitioners are to be named, then a customer number must be used):

Name	Registration Number	Name	Registration Number

As attorney(s) or agent(s) to represent the undersigned before the United States Patent and Trademark Office (USPTO) in connection with any and all patent applications assigned only to the undersigned according to the USPTO assignment records or assignments documents attached to this form in accordance with 37 CFR 3.73(c).

Please change the correspondence address for the application identified in the attached statement under 37 CFR 3.73(c) to:

[■] The address associated with Customer Number: 28661

OR

[ ]	Firm or Individual Name			
	Address			
	City		State	Zip
	Country			
	Telephone		Email	

Assignee Name and Address: Incept, inc.
92 Corporate Park
Suite C #818
Irvine, California 92606

A copy of this form, together with a statement under 37 CFR 3.73(c) (Form PTO/AIA/96 or equivalent) is required to be Filed in each application in which this form is used. The statement under 37 CFR 3.73(c) may be completed by one of The practitioners appointed in this form, and must identify the application in which this Power of Attorney is to be filed.

SIGNATURE of Assignee of Record

The individual whose signature and title is supplied below is authorized to act on behalf of the assignee

Signature	[signature]	Date	5/14/14
Name	Thien Nguyen	Telephone	714-312-9959
Title			

This collection of information is required by 37 CFR 1.31, 1.32 and 1.33. The information is required to obtain or retain a benefit by the public which is to file (and by the USPTO to process) an application. Confidentiality is governed by 35 U.S.C. 122 and 37 CFR 1.11 and 1.14. This collection is estimated to take 3 minutes to complete, including gathering, preparing, and submitting the completed application form to the USPTO. Time will vary depending upon the individual case. Any comments on the amount of time you require to complete this form and/or suggestions for reducing this burden, should be sent to the Chief Information Officer, U.S. Patent and Trademark Office, U.S. Department of Commerce, P.O. Box 1450, Alexandria, VA 22313-1450. DO NOT SEND FEES OR COMPLETED FORMS TO THIS ADDRESS. **SEND TO: Commissioner for Patents, P.O. Box 1450, Alexandria, VA 22313-1450.**

If you need assistance in completing the form, call 1-800-PTO-9199 and select option 2.

PTO/AIA/96 (08-12)
Approved for use through 01/31/2013. OMB 0651-0031
U.S. Patent and Trademark Office; U.S. DEPARTMENT OF COMMERCE
Under the Paperwork Reduction Act of 1995, no persons are required to respond to a collection of information unless it displays a valid OMB control number.

STATEMENT UNDER 37 CFR 3.73(c)

Applicant/Patent Owner: Thien Nguyen

Application No./Patent No.: 14/100,323 Filed/Issue Date: December 9, 2013

Titled: Intraoral Dental Suction and Isolation System

Incept, Inc., a Corporation

(Name of Assignee) (Type of Assignee, e.g., corporation, partnership, university, government agency, etc.)

states that, for the patent application/patent identified above, it is (choose **one** of options 1, 2, 3 or 4 below):

1. ☑ The assignee of the entire right, title, and interest.

2. ☐ An assignee of less than the entire right, title, and interest (check applicable box):

☐ The extent (by percentage) of its ownership interest is _____%. Additional Statement(s) by the owners holding the balance of the interest must be submitted to account for 100% of the ownership interest.

☐ There are unspecified percentages of ownership. The other parties, including inventors, who together own the entire right, title and interest are:

Additional Statement(s) by the owner(s) holding the balance of the interest must be submitted to account for the entire right, title, and interest.

3. ☐ The assignee of an undivided interest in the entirety (a complete assignment from one of the joint inventors was made). The other parties, including inventors, who together own the entire right, title, and interest are:

Additional Statement(s) by the owner(s) holding the balance of the interest must be submitted to account for the entire right, title, and interest.

4. ☐ The recipient, via a court proceeding or the like (*e.g.*, bankruptcy, probate), of an undivided interest in the entirety (a complete transfer of ownership interest was made). The certified document(s) showing the transfer is attached.

The interest identified in option 1, 2 or 3 above (not option 4) is evidenced by either (choose **one** of options A or B below):

A. ☑ An assignment from the inventor(s) of the patent application/patent identified above. The assignment was recorded in the United States Patent and Trademark Office at Reel 031909, Frame 0322, or for which a copy thereof is attached.

B. ☐ A chain of title from the inventor(s), of the patent application/patent identified above, to the current assignee as follows:

1. From: _____ To: _____

The document was recorded in the United States Patent and Trademark Office at

Reel _____, Frame _____, or for which a copy thereof is attached.

2. From: _____ To: _____

The document was recorded in the United States Patent and Trademark Office at

Reel _____, Frame _____, or for which a copy thereof is attached.

This collection of information is required by 37 CFR 3.73(b). The information is required to obtain or retain a benefit by the public which is to file (and by the USPTO to process) an application. Confidentiality is governed by 35 U.S.C. 122 and 37 CFR 1.11 and 1.14. This collection is estimated to take 12 minutes to complete, including gathering, preparing, and submitting the completed application form to the USPTO. Time will vary depending upon the individual case. Any comments on the amount of time you require to complete this form and/or suggestions for reducing this burden, should be sent to the Chief Information Officer, U.S. Patent and Trademark Office, U.S. Department of Commerce, P.O. Box 1450, Alexandria, VA 22313-1450. DO NOT SEND FEES OR COMPLETED FORMS TO THIS ADDRESS. **SEND TO: Commissioner for Patents, P.O. Box 1450, Alexandria, VA 22313-1450**.

If you need assistance in completing the form, call 1-800-PTO-9199 and select option 2.

Under the Paperwork Reduction Act of 1995, no persons are required to respond to a collection of information unless it displays a valid OMB control number.

STATEMENT UNDER 37 CFR 3.73(c)

3. From: _____ To: _____

The document was recorded in the United States Patent and Trademark Office at

Reel _____, Frame _____, or for which a copy thereof is attached.

4. From: _____ To: _____

The document was recorded in the United States Patent and Trademark Office at

Reel _____, Frame _____, or for which a copy thereof is attached.

5. From: _____ To: _____

The document was recorded in the United States Patent and Trademark Office at

Reel _____, Frame _____, or for which a copy thereof is attached.

6. From: _____ To: _____

The document was recorded in the United States Patent and Trademark Office at

Reel _____, Frame _____, or for which a copy thereof is attached.

☐ Additional documents in the chain of title are listed on a supplemental sheet(s).

☑ As required by 37 CFR 3.73(c)(1)(i), the documentary evidence of the chain of title from the original owner to the assignee was, or concurrently is being, submitted for recordation pursuant to 37 CFR 3.11.

[NOTE: A separate copy (i.e., a true copy of the original assignment document(s)) must be submitted to Assignment Division in accordance with 37 CFR Part 3, to record the assignment in the records of the USPTO. See MPEP 302.08]

The undersigned (whose title is supplied below) is authorized to act on behalf of the assignee.

/Tam Thanh Pham/	May 19, 2014
Signature	Date
Tam Thanh Pham	50565
Printed or Typed Name	Title or Registration Number

Electronic Acknowledgement Receipt

EFS ID:	19071482
Application Number:	14100323
International Application Number:	
Confirmation Number:	5734
Title of Invention:	INTRAORAL DENTAL SUCTION AND ISOLATION SYSTEM
First Named Inventor/Applicant Name:	Thien Nguyen
Customer Number:	28661
Filer:	TamThanh Thi Pham/Adriena Garcia
Filer Authorized By:	TamThanh Thi Pham
Attorney Docket Number:	INCEP-001
Receipt Date:	19-MAY-2014
Filing Date:	09-DEC-2013
Time Stamp:	19:44:05
Application Type:	Utility under 35 USC 111(a)

Payment information:

Submitted with Payment	no

File Listing:

Document Number	Document Description	File Name	File Size(Bytes)/ Message Digest	Multi Part /.zip	Pages (if appl.)
1	Oath or Declaration filed	INCEP-001_Declaration-Nguyen.pdf	240154 13d3e44ba325737d25e5836004e8c505652f1b59	no	2

Warnings:

Information:

2	Oath or Declaration filed	INCEP-001_Declaration-Pham.pdf	46300 6fa3c1df4f54e80396687e9bb6a3db9a3e3fc146	no	2
Warnings:					
Information:					
3	Power of Attorney	INCEP-001_POA_5-19-14.pdf	310914 b33ecc89de1186978e887d4a9fb6c5890baa03be	no	3
Warnings:					
Information:					
			Total Files Size (in bytes):	597368	

This Acknowledgement Receipt evidences receipt on the noted date by the USPTO of the indicated documents, characterized by the applicant, and including page counts, where applicable. It serves as evidence of receipt similar to a Post Card, as described in MPEP 503.

<u>New Applications Under 35 U.S.C. 111</u>
If a new application is being filed and the application includes the necessary components for a filing date (see 37 CFR 1.53(b)-(d) and MPEP 506), a Filing Receipt (37 CFR 1.54) will be issued in due course and the date shown on this Acknowledgement Receipt will establish the filing date of the application.

<u>National Stage of an International Application under 35 U.S.C. 371</u>
If a timely submission to enter the national stage of an international application is compliant with the conditions of 35 U.S.C. 371 and other applicable requirements a Form PCT/DO/EO/903 indicating acceptance of the application as a national stage submission under 35 U.S.C. 371 will be issued in addition to the Filing Receipt, in due course.

<u>New International Application Filed with the USPTO as a Receiving Office</u>
If a new international application is being filed and the international application includes the necessary components for an international filing date (see PCT Article 11 and MPEP 1810), a Notification of the International Application Number and of the International Filing Date (Form PCT/RO/105) will be issued in due course, subject to prescriptions concerning national security, and the date shown on this Acknowledgement Receipt will establish the international filing date of the application.

DECLARATION FOR PATENT APPLICATION

As a below named inventor, I hereby declare that:

My residence, post office address and citizenship are as stated below next to my name.

I believe I am an original inventor of the subject matter which is claimed and for which a patent is sought on the invention entitled **Intraoral Dental Suction and Isolation System** the specification of which was filed **December 9, 2013** and assigned U.S. patent application **14/100,323**.

I hereby state that the above-identified application was made or authorized to be made by me.

I hereby declare that all statements made herein of my own knowledge are true and that all statements made on information and belief are believed to be true; and further that these statements were made with the knowledge that willful false statements and the like so made are punishable by fine or imprisonment, or both, under Section 1001 of Title 18 of the United States Code and that such willful false statements may jeopardize the validity of the application or any patent issued thereon.

Full name of inventor: **Thien Nguyen**

Citizenship: U.S. CITIZEN

Inventor's signature: _____
(Permanent ink only)

Dated (optional): _____
(Date)

Mailing Address: **92 Corporate Park**
Suite C, #818
Irvine, California 92606

Residence: Santa Ana, California
(Japan: *prefecture, city, village, city ward, etc.*; US: *city and state)*

37 CFR §1.56 Duty to disclose information material to patentability.

(a) A patent by its very nature is affected with a public interest. The public interest is best served, and the most effective patent examination occurs when, at the time an application is being examined, the Office is aware of and evaluates the teachings of all information material to patentability. Each individual associated with the filing and prosecution of a patent application has a duty of candor and good faith in dealing with the Office, which includes a duty to disclose to the Office all information known to that individual to be material to patentability as defined in this section. The duty to disclose information exists with respect to each pending claim until the claim is cancelled or withdrawn from consideration, or the application becomes abandoned. Information material to the patentability of a claim that is cancelled or withdrawn from consideration need not be submitted if the information is not material to the patentability of any claim remaining under consideration in the application. There is no duty to submit information which is not material to the patentability of any existing claim. The duty to disclose all information known to be material to patentability is deemed to be satisfied if all information known to be material to patentability of any claim issued in a patent was cited by the Office or submitted to the Office in the manner prescribed by §§ 1.97(b)(d) and 1.98. However, no patent will be granted on an application in connection with which fraud on the Office was practiced or attempted or the duty of disclosure was violated through bad faith or intentional misconduct. The Office encourages applicants to carefully examine:

(1) Prior art cited in search reports of a foreign patent office in a counterpart application, and

(2) The closest information over which individuals associated with the filing or prosecution of a patent application believe any pending claim patentably defines, to make sure that any material information contained therein is disclosed to the Office.

(b) Under this section, information is material to patentability when it is not cumulative to information already of record or being made of record in the application, and

(1) It establishes, by itself or in combination with other information, a *prima facie* case of unpatentability of a claim; or

(2) It refutes, or is inconsistent with, a position the applicant takes in:

(i) Opposing an argument of unpatentability relied on by the Office, or

(ii) Asserting an argument of patentability. A *prima facie* case of unpatentability is established when the information compels a conclusion that a claim is unpatentable under the preponderance of evidence, burden of proof standard, giving each term in the claim its broadest reasonable construction consistent with the specification, and before any consideration is given to evidence which may be submitted in an attempt to establish a contrary conclusion of patentability.

(c) Individuals associated with the filing or prosecution of a patent application within the meaning of this section are:

(1) Each inventor named in the application;

(2) Each attorney or agent who prepares or prosecutes the application; and

(3) Every other person who is substantively involved in the preparation or prosecution of the application and who is associated with the inventor, with the assignee or with anyone to whom there is an obligation to assign the application.

(d) Individuals other than the attorney, agent or inventor may comply with this section by disclosing information to the attorney, agent, or inventor.

(e) In any continuation-in-part application, the duty under this section includes the duty to disclose to the Office all information known to the person to be material to patentability, as defined in paragraph (b) of this section, which became available between the filing date of the prior application and the national or PCT international filing date of the continuation-in-part application.

DECLARATION FOR PATENT APPLICATION

As a below named inventor, I hereby declare that:

My residence, post office address and citizenship are as stated below next to my name.

I believe I am an original inventor of the subject matter which is claimed and for which a patent is sought on the invention entitled **Intraoral Dental Suction and Isolation System** the specification of which was filed **December 9, 2013** and assigned U.S. patent application **14/100,323**.

I hereby state that the above-identified application was made or authorized to be made by me.

I hereby declare that all statements made herein of my own knowledge are true and that all statements made on information and belief are believed to be true; and further that these statements were made with the knowledge that willful false statements and the like so made are punishable by fine or imprisonment, or both, under Section 1001 of Title 18 of the United States Code and that such willful false statements may jeopardize the validity of the application or any patent issued thereon.

Full name of inventor: **Tam Thanh Pham**

Citizenship: USA

Inventor's signature: _____

(Permanent ink only)

Dated (optional): May 19, 2014

(Date)

Mailing Address: **92 Corporate Park**
Suite C, #818
Irvine, California 92606

Residence: San Francisco, California

(Japan: *prefecture, city, village, city ward, etc.*; US: *city and state)*

37 CFR §1.56 Duty to disclose information material to patentability.

(a) A patent by its very nature is affected with a public interest. The public interest is best served, and the most effective patent examination occurs when, at the time an application is being examined, the Office is aware of and evaluates the teachings of all information material to patentability. Each individual associated with the filing and prosecution of a patent application has a duty of candor and good faith in dealing with the Office, which includes a duty to disclose to the Office all information known to that individual to be material to patentability as defined in this section. The duty to disclose information exists with respect to each pending claim until the claim is cancelled or withdrawn from consideration, or the application becomes abandoned. Information material to the patentability of a claim that is cancelled or withdrawn from consideration need not be submitted if the information is not material to the patentability of any claim remaining under consideration in the application. There is no duty to submit information which is not material to the patentability of any existing claim. The duty to disclose all information known to be material to patentability is deemed to be satisfied if all information known to be material to patentability of any claim issued in a patent was cited by the Office or submitted to the Office in the manner prescribed by §§ 1.97(b)(d) and 1.98. However, no patent will be granted on an application in connection with which fraud on the Office was practiced or attempted or the duty of disclosure was violated through bad faith or intentional misconduct. The Office encourages applicants to carefully examine:

(1) Prior art cited in search reports of a foreign patent office in a counterpart application, and

(2) The closest information over which individuals associated with the filing or prosecution of a patent application believe any pending claim patentably defines, to make sure that any material information contained therein is disclosed to the Office.

(b) Under this section, information is material to patentability when it is not cumulative to information already of record or being made of record in the application, and

(1) It establishes, by itself or in combination with other information, a *prima facie* case of unpatentability of a claim; or

(2) It refutes, or is inconsistent with, a position the applicant takes in:

(i) Opposing an argument of unpatentability relied on by the Office, or

(ii) Asserting an argument of patentability. A *prima facie* case of unpatentability is established when the information compels a conclusion that a claim is unpatentable under the preponderance of evidence, burden of proof standard, giving each term in the claim its broadest reasonable construction consistent with the specification, and before any consideration is given to evidence which may be submitted in an attempt to establish a contrary conclusion of patentability.

(c) Individuals associated with the filing or prosecution of a patent application within the meaning of this section are:

(1) Each inventor named in the application;

(2) Each attorney or agent who prepares or prosecutes the application; and

(3) Every other person who is substantively involved in the preparation or prosecution of the application and who is associated with the inventor, with the assignee or with anyone to whom there is an obligation to assign the application.

(d) Individuals other than the attorney, agent or inventor may comply with this section by disclosing information to the attorney, agent, or inventor.

(e) In any continuation-in-part application, the duty under this section includes the duty to disclose to the Office all information known to the person to be material to patentability, as defined in paragraph (b) of this section, which became available between the filing date of the prior application and the national or PCT international filing date of the continuation-in-part application.

IN THE UNITED STATES PATENT AND TRADEMARK OFFICE

APPLICANT(S):	Nguyen et al.
APPLICATION NO.:	14/100,323
FILING DATE:	December 9, 2013
TITLE:	Intraoral Dental Suction and Isolation System
ART UNIT:	3732
CONFIRM. NO.:	5734
ATTY.DKT.NO.:	INCEP-001

MAIL STOP AMENDMENT
COMMISSIONER FOR PATENTS
P.O. BOX 1450
ALEXANDRIA, VA 22313-1450

AMENDMENT A

Examiner Mai:

In response to the office action dated May 6, 2014 (*Office Action*), please enter the following **amendments** to the **specification** and **claims**, which commence on **pages two** and **three** , respectively. The Applicants' **remarks** and **conclusion** appear beginning on **pages six** and **thirteen**, respectively.

IN THE SPECIFICATION

PLEASE AMEND THE ABSTRACT AS FOLLOWS:

A dental mouthpiece is provided that may be attached to a high-suction dental adapter for the purpose of assisting the dental staff during dental procedures through chair-side, hands-free suction, and isolation. Such a mouthpiece may ~~comprise~~ include a main body portion, a cheek retractor portion, and a suction connector portion. In some embodiments, the main body portion, cheek retractor portion, and suction connector portion (and sub-portions thereof) may be molded in one piece, preferably by injection molding. In an exemplary embodiment, the mouthpiece may be made of a material that is flexible, translucent, conducive to injection molding, high heat-resistant, and autoclavable. Such a material may include silicone. Because the mouthpiece may be made of a high heat-resistant and autoclavable material, such a mouthpiece may be reusable.

IN THE CLAIMS

PLEASE AMEND THE CLAIMS AS FOLLOWS:

1. (currently amended) A dental mouthpiece composed of a bendable material, the dental mouthpiece formed in a curve and comprising:

a main body portion at a central part of the curve and comprising a defined pocket having an anterior wall inside the curve, a posterior wall outside the curve, and a side wall in between the anterior wall and the posterior wall, wherein the anterior wall, the posterior wall, and the side wall define an interior portion of the defined pocket;

a cheek retractor portion ~~configured to press against a cheek of a patient~~ connected to the main body portion and having a surface that applies pressure when ~~placed in a mouth of the patient, wherein~~ the dental mouthpiece is bent, wherein the pressure is based on resilience of the bendable material ~~causes the cheek retractor portion to retract a cheek of the patient away from the teeth of the patient~~; and

a suction connector portion for connecting the interior portion of the main body portion to a vacuum suction source, wherein the suction connector portion is connected to the main body portion on an end opposite the cheek retractor.

2. (original) The mouthpiece of claim 1, wherein the side wall includes a plurality of perforations.

3. (original) The mouthpiece of claim 1, wherein the anterior wall and the posterior wall each includes a plurality of perforations.

4. (original) The mouthpiece of claim 1, wherein the anterior wall further includes a slit along a central axis.

5. (currently amended) The mouthpiece of claim 1, further comprising a stability bar protruding from an interior surface of the posterior wall, wherein a thickness of the stability bar ~~increases~~ corresponds to the resilience [[of]] by which the cheek retractor portion applies pressure during bending of the dental mouthpiece.

6. (currently amended) The mouthpiece of claim 1, wherein the main body portion, the cheek retractor portion, and the suction connector portion are ~~formed by~~ injection-molded as one piece.

7. (currently amended) The mouthpiece of claim 1, wherein the material ~~used in the injection-molding~~ is a flexible, translucent, high heat-resistant, autoclavable silicone-based material.

8. (original) The mouthpiece of claim 1, further comprising a bridge structure protruding from an interior surface of the posterior wall, the protruding bridge structure comprising a plurality of spaced contact points that keep the anterior wall separated from the posterior wall during suction.

9. (original) The mouthpiece of claim 8, wherein the bridge structure protrudes from the interior surface of the posterior wall in a wave shape, and wherein the contact points are at crests of the wave shape.

10. (currently amended) The mouthpiece of claim 9, wherein troughs of the wave shape ~~are configured to~~ allow suction through the bridge structure.

11. (currently amended) The mouthpiece of claim 1, wherein the suction connector portion comprises an internal stop to assist in positioning of [[a]] the vacuum suction source or a vacuum adaptor.

12. (original) The mouthpiece of claim 1, further comprising a detachable mouth prop.

13. (original) The mouthpiece of claim 12, wherein the detachable mouth prop comprises a strap configured to fit around the suction connector portion, wherein an external surface of the suction connector portion comprises a notch region corresponding to the strap, and wherein an external surface of the strap is substantially flush with a remaining external surface of the suction connector portion when the strap sits in the notch region.

14. (currently amended) The mouthpiece of claim 13, wherein the strap [[is]] and other portions of the mouth prop are injection-molded [[in]] as a single piece ~~with the mouth prop~~.

15. (currently amended) The mouthpiece of claim 12, wherein the suction connector portion further comprises an external plug protrusion corresponding to an opening in [[a]] the mouth prop ~~associated with the strap~~.

16. (currently amended) The mouthpiece of claim 15, wherein the plug protrusion fits into the opening to provide additional crush-resistance and decreased compressibility ~~during biting by the patient~~.

17. (original) The mouthpiece of claim 1, wherein the suction connector portion comprises a cutout corresponding to a protrusion on a vacuum adapter for an interlocking fit.

18. (original) The mouthpiece of claim 1, wherein the anterior wall and the posterior wall have different thicknesses.

19. (new) The mouthpiece of claim 1, wherein the main body portion comprises:

a base portion connected to the suction connector portion at a first end,

a cheek retractor connector portion connected to a second end of the base portion, the second end opposite the first end of the base portion, wherein the cheek retractor connector portion is narrower than the base portion, and the cheek retractor connects to main body portion at the cheek retractor connector portion.

20. (new) The mouthpiece of claim 1, wherein one or more of the walls is a protective wall, and wherein debris external to mouthpiece is subject to being caught by suction and/or by the protective wall.

REMARKS

Interview Summary

On May 14 and 20, the Applicants' representative and Examiner Mai discussed the cited prior art references and the differences from the claimed invention, as well as possible amendments to highlight such differences.

The Applicants' representative and the Examiner agreed that the structure of the disclosed mouthpiece could be distinguished from the prior art references (*e.g.*, *Rhoades*). The Applicants agreed to submit amendments to highlight the structural elements thereof. The Examiner further advised that the Applicants describe the structure of the claimed mouthpiece without reference to the mouth of a patient.

The Applicants hereby submit amendments and remarks in accordance with the discussion and the Examiner's advice. The Applicants thank the Examiner for her time and courtesy in the *Interview*. The Applicants further invite the Examiner to contact Applicants' undersigned representative with any questions.

Drawing Objections

The Examiner makes a first drawing objection, because they do not include the reference sign "strap 310." *Office Action*, 2. The Applicants direct the Examiner's attention to FIG. 3A, which is provided here for reference.

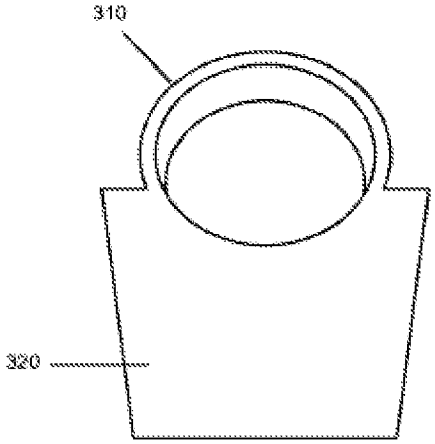

FIG. 3A

As can be seen in FIG. 3A, the reference number 310 is associated with a strap. The description "strap 310" should therefore be understood as referring to the strap structure illustrated and labeled "310" in FIG. 3A. Because the description has a corresponding illustration, the Applicants respectfully requests the first drawing objection be withdrawn.

The Examiner makes a second drawing objection based on a purported failure to illustrate the claimed 'strap configured to fit around the suction connector portion…wherein an external surface of the strap is substantially flush with a remaining external surface of the suction connection portion when the strap sits in the notch region.' *Office Action*, 2. The Applicants directs the Examiner attention to FIG. 3A (provided above), as well as the following figures.

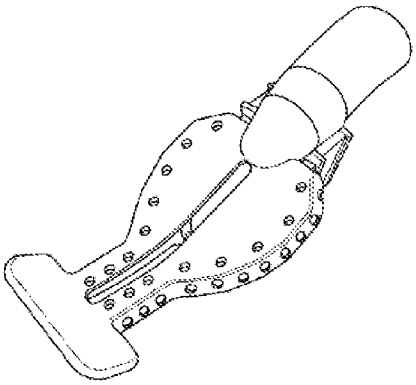

FIG. 1A

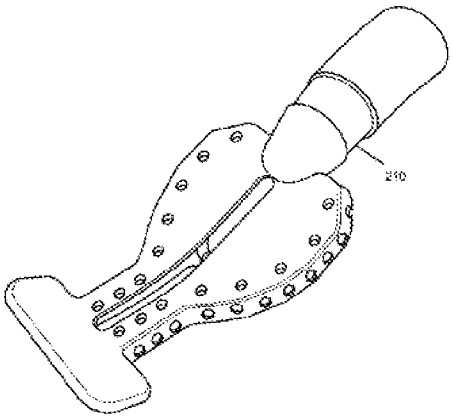

FIG. 2A

"FIG. 1A is a perspective view of an exemplary mouthpiece with a detachable mouth prop," "FIG. 2A is a perspective view of the exemplary mouthpiece of FIG. 1A where the detachable

mouth prop has been detached," and "FIGs. 3A-E provide different close-up views of an exemplary mouth prop 160. The **removable strap 310** may be attached to mouth prop 160." *Specification*, [0008]; [0013], [0043].

As illustrated in FIG. 3A, the mouth prop includes strap 310. Further, FIG. 2A illustrates a notch region 210 having a depth that substantially corresponds to the thickness of the strap, such that when the strap sits in the notch region as illustrated in FIG. 1A, the surfaces are substantially flush. Based on the foregoing, the Applicants respectfully request that the second drawing objection be withdrawn.

Amendment to the Specification

The Examiner objects to the use of the term "comprise" in the Abstract. *Office Action*, 3. The Applicants have amended the abstract to replace "comprise" with the less legalistic "include." As such, the Applicants submit that the objection to the specification has been overcome.

Rejection under 35 U.S.C. § 112 , ¶ 2

The Examiner rejects claims 7 and 13-16 for indefiniteness. *Office Action*, 3. Specifically, claim 7 is rejected based on lack of antecedent basis for "the injection-molding." *Id.* The Applicants have amended claim 7 to remove "the," thereby rendering the rejection of claim 7 moot.

The Examiner rejects claims 13 and 14 for purported lack of clarity as to "whether the strap is a different element from the mouth prop or the strap itself is the mouth prop." *Office Action*, 3. The Applicants submit that the strap is a portion of the mouth prop, as consistent with claim 13. In that regard, claim 14 has been amended to clarify that the strap and "other portions" of the mouth prop are injection-molded as one piece. As such, the Applicants submit the Section 112 rejections thereof are overcome.

Claims 15 and 16 are rejected for lack of antecedent basis with respect to 'the strap.' *Office Action*, 3. The dependency of claim 15 has been amended to remove the reference to 'the strap,' thereby rendering the rejection moot. As claim 16 is dependent on claim 15, the rejection is likewise rendered moot for the same reasons.

Based on the foregoing, the Applicants submit the Section 112 rejections have been overcome.

Rejection under 35 U.S.C. §§ 102, 103

The Examiner stated that claims 1-6, 8, 11, 12, 17, and 18 are anticipated by U.S. patent application number 4,802,851 (hereinafter *Rhoades*). *Office Action*, 4. Claim 7 is rejected as obvious over *Rhoades* in view of U.S. patent number 5,890,899 (hereinafter *Sclafani*). *Office Action*, 6. Claims 8-10 is rejected as obvious over *Rhoades* in view of U.S. patent number 2009/0274991 (hereinafter *Black*). *Office Action*, 6. The Applicants respectfully traverse the rejections.

"Because the hallmark of anticipation is prior invention, the prior art reference—in order to anticipate under 35 U.S.C. § 102—must not only disclose all elements of the claim within the four corners of the document, but must also disclose those elements 'arranged as in the claim.'" *Net MoneyIN, Inc. v. VeriSign, Inc.*, 545 F.3d 1359, 1370 (Fed. Cir. 2008) (citations omitted). To support a conclusion that the claim would have been obvious requires that "**all** the claimed elements were known in the prior art and that one skilled in the art could have combined the elements as claimed." MPEP 2143.02 (citing *KSR v. Teleflex*, 127 S.Ct. 1727, 1739 (2007)). *Rhoades*—individually or in any combination with *Sclafani* or *Black*—fail to teach at least the claimed 'dental mouthpiece composed of a bendable material, the dental mouthpiece formed in a curve and comprising: a main body portion at a central part of the curve and comprising a defined pocket having an anterior wall inside the curve, a posterior wall outside the curve, and a side wall in between the anterior wall and the posterior wall, wherein the anterior wall, the posterior wall, and the side wall define an interior portion of the defined pocket.'

FIGs. 1B and 1D are provided below for reference:

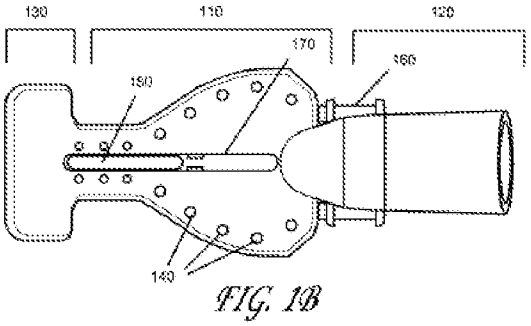

FIG. 1B

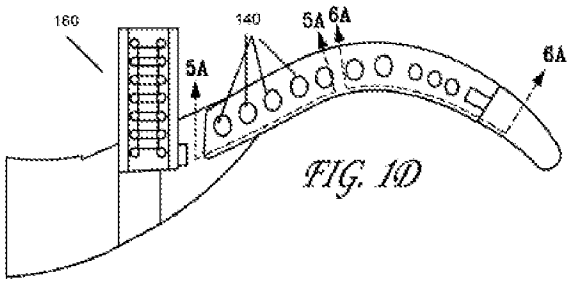

FIG. 1D

As illustrated and described, the mouthpiece has a curved shape. The main body portion 110 is located at a central portion of the curve and include several walls that define a pocket that has an interior portion.

By contrast, *Rhoades* has a wholly different structure, as illustrated in FIG. 7 provided below.

FIG. 7

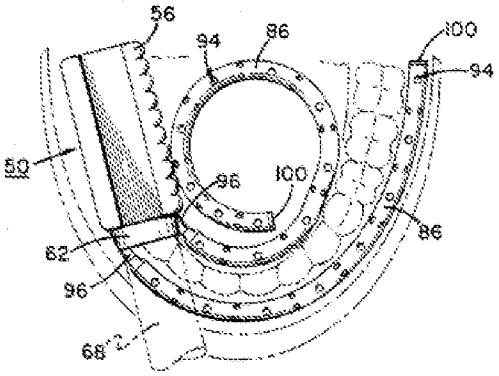

Rhoades merely describes"[a] combination jaw rest and ejector having a generally hollow wedge-shaped body with upper and lower channels in which a patient's teeth rest and which holds open the patient's mouth." *Rhoades*, Abstract.

As can be seen in FIG. 7, the "combination jaw rest and ejector" of *Rhoades* is structurally distinguishable from the claimed mouthpiece. For one thing, the "combination jaw rest and ejector" of *Rhoades* is "wedge-shaped" and lacks the claimed curve. As such, the component purported to teach the claimed 'main body portion' cannot be at a central part of the curve with an anterior wall inside the curve and a posterior wall outside the curve. *Rhoades* therefore cannot anticipate all the limitations of claim 1, thereby failing to anticipate the claims that are dependent therefrom.

Sclafani and *Black* cannot cure *Rhoades*'s failure to teach each any every element recited in the independent claims. *Sclafani* was cited merely to teach the claimed 'silicone-based' material recited in dependent claim 7. *Office Action*, 6. In that regard, *Sclafani* lacks any teaching would teach the claim limitations of independent claim 1 that are missing from *Rhoades*.

Likewise, *Black* was merely relied upon to teach the claimed 'bridge structure' recited in dependent claims 8-10. *Black*, like *Sclafani*, lacks any teaching that would teach the claim limitations of independent claim 1 that are missing from *Rhoades*.

Rhoades—individually or in any combination with *Sclafani* or *Black*—therefore fail to disclose all the elements of the independent claims. Further, because each of the dependent claims incorporates by reference all the limitations of the independent claim from which it depends, the dependent claims are allowable for at least the same reasons.

CONCLUSION

The Applicants have evidenced the failure of *Rhoades*—individually or in any combination with *Sclafani* or *Black*—to disclose all the limitations of the independent claims, including at least the claimed 'dental mouthpiece composed of a bendable material, the dental mouthpiece formed in a curve and comprising: a main body portion at a central part of the curve and comprising a defined pocket having an anterior wall inside the curve, a posterior wall outside the curve, and a side wall in between the anterior wall and the posterior wall, wherein the anterior wall, the posterior wall, and the side wall define an interior portion of the defined pocket.'

Any claim dependent upon one of the aforementioned independent claims—either directly or via an intermediate dependent claim—is allowable for at least the same reasons as the claim from which it depends.

As all rejections have been overcome, the Applicants contend the present application is in condition for allowance. The Examiner is invited to contact the Applicants' undersigned representative with any questions concerning the present amendment.

Respectfully submitted,
Nguyen et al.

May 21, 2014

By: /Tam Thanh Pham/

Tam Thanh Pham, Reg. No. 50,565
Lewis Roca Rothgerber *LLP*
2440 W. El Camino Real, 6th Floor
Mountain View, CA 94040
(T) 650.391.1386
(F) 650.391.1395
DocketsIP@lrlaw.com

Electronic Acknowledgement Receipt

EFS ID:	19098414
Application Number:	14100323
International Application Number:	
Confirmation Number:	5734
Title of Invention:	INTRAORAL DENTAL SUCTION AND ISOLATION SYSTEM
First Named Inventor/Applicant Name:	Thien Nguyen
Customer Number:	28661
Filer:	TamThanh Thi Pham/Adriena Garcia
Filer Authorized By:	TamThanh Thi Pham
Attorney Docket Number:	INCEP-001
Receipt Date:	21-MAY-2014
Filing Date:	09-DEC-2013
Time Stamp:	22:23:30
Application Type:	Utility under 35 USC 111(a)

Payment information:

Submitted with Payment	no

File Listing:

Document Number	Document Description	File Name	File Size(Bytes)/ Message Digest	Multi Part /.zip	Pages (if appl.)
1		INCEP-001_Amendment-5-21-14.pdf	216933 846a871b727ae904292dc7844f3c32e627be7283	yes	13

	Multipart Description/PDF files in .zip description		
	Document Description	**Start**	**End**
	Amendment/Req. Reconsideration-After Non-Final Reject	1	1
	Specification	2	2
	Claims	3	6
	Applicant summary of interview with examiner	7	7
	Applicant Arguments/Remarks Made in an Amendment	8	13

Warnings:

Information:

Total Files Size (in bytes):	216933

This Acknowledgement Receipt evidences receipt on the noted date by the USPTO of the indicated documents, characterized by the applicant, and including page counts, where applicable. It serves as evidence of receipt similar to a Post Card, as described in MPEP 503.

<u>New Applications Under 35 U.S.C. 111</u>
If a new application is being filed and the application includes the necessary components for a filing date (see 37 CFR 1.53(b)-(d) and MPEP 506), a Filing Receipt (37 CFR 1.54) will be issued in due course and the date shown on this Acknowledgement Receipt will establish the filing date of the application.

<u>National Stage of an International Application under 35 U.S.C. 371</u>
If a timely submission to enter the national stage of an international application is compliant with the conditions of 35 U.S.C. 371 and other applicable requirements a Form PCT/DO/EO/903 indicating acceptance of the application as a national stage submission under 35 U.S.C. 371 will be issued in addition to the Filing Receipt, in due course.

<u>New International Application Filed with the USPTO as a Receiving Office</u>
If a new international application is being filed and the international application includes the necessary components for an international filing date (see PCT Article 11 and MPEP 1810), a Notification of the International Application Number and of the International Filing Date (Form PCT/RO/105) will be issued in due course, subject to prescriptions concerning national security, and the date shown on this Acknowledgement Receipt will establish the international filing date of the application.

PTO/SB/06 (09-11)
Approved for use through 1/31/2014. OMB 0651-0032
U.S. Patent and Trademark Office; U.S. DEPARTMENT OF COMMERCE
Under the Paperwork Reduction Act of 1995, no persons are required to respond to a collection of information unless it displays a valid OMB control number.

PATENT APPLICATION FEE DETERMINATION RECORD

Substitute for Form PTO-875

Application or Docket Number	Filing Date	
14/100,323	12/09/2013	☐ To be Mailed

ENTITY: ☐ LARGE ☒ SMALL ☐ MICRO

APPLICATION AS FILED – PART I

FOR	(Column 1) NUMBER FILED	(Column 2) NUMBER EXTRA	RATE ($)	FEE ($)
☐ BASIC FEE (37 CFR 1.16(a), (b), or (c))	N/A	N/A	N/A	
☐ SEARCH FEE (37 CFR 1.16(k), (i), or (m))	N/A	N/A	N/A	
☐ EXAMINATION FEE (37 CFR 1.16(o), (p), or (q))	N/A	N/A	N/A	
TOTAL CLAIMS (37 CFR 1.16(i))	minus 20 =	*	x $ =	
INDEPENDENT CLAIMS (37 CFR 1.16(h))	minus 3 =	*	x $ =	
☐ APPLICATION SIZE FEE (37 CFR 1.16(s))	If the specification and drawings exceed 100 sheets of paper, the application size fee due is $310 ($155 for small entity) for each additional 50 sheets or fraction thereof. See 35 U.S.C. 41(a)(1)(G) and 37 CFR 1.16(s).			
☐ MULTIPLE DEPENDENT CLAIM PRESENT (37 CFR 1.16(j))				
* If the difference in column 1 is less than zero, enter "0" in column 2.			TOTAL	

APPLICATION AS AMENDED – PART II

AMENDMENT

05/21/2014	(Column 1) CLAIMS REMAINING AFTER AMENDMENT		(Column 2) HIGHEST NUMBER PREVIOUSLY PAID FOR	(Column 3) PRESENT EXTRA	RATE ($)	ADDITIONAL FEE ($)
Total (37 CFR 1.16(i))	* 20	Minus	** 20	= 0	x $40 =	0
Independent (37 CFR 1.16(h))	* 1	Minus	***3	= 0	x $210 =	0
☐ Application Size Fee (37 CFR 1.16(s))						
☐ FIRST PRESENTATION OF MULTIPLE DEPENDENT CLAIM (37 CFR 1.16(j))						
					TOTAL ADD'L FEE	0

AMENDMENT

	(Column 1) CLAIMS REMAINING AFTER AMENDMENT		(Column 2) HIGHEST NUMBER PREVIOUSLY PAID FOR	(Column 3) PRESENT EXTRA	RATE ($)	ADDITIONAL FEE ($)
Total (37 CFR 1.16(i))	*	Minus	**	=	x $ =	
Independent (37 CFR 1.16(h))	*	Minus	***	=	x $ =	
☐ Application Size Fee (37 CFR 1.16(s))						
☐ FIRST PRESENTATION OF MULTIPLE DEPENDENT CLAIM (37 CFR 1.16(j))						
					TOTAL ADD'L FEE	

* If the entry in column 1 is less than the entry in column 2, write "0" in column 3.
** If the "Highest Number Previously Paid For" IN THIS SPACE is less than 20, enter "20".
*** If the "Highest Number Previously Paid For" IN THIS SPACE is less than 3, enter "3".
The "Highest Number Previously Paid For" (Total or Independent) is the highest number found in the appropriate box in column 1.

LIE
/TRINA STEPTOE/

This collection of information is required by 37 CFR 1.16. The information is required to obtain or retain a benefit by the public which is to file (and by the USPTO to process) an application. Confidentiality is governed by 35 U.S.C. 122 and 37 CFR 1.14. This collection is estimated to take 12 minutes to complete, including gathering, preparing, and submitting the completed application form to the USPTO. Time will vary depending upon the individual case. Any comments on the amount of time you require to complete this form and/or suggestions for reducing this burden, should be sent to the Chief Information Officer, U.S. Patent and Trademark Office, U.S. Department of Commerce, P.O. Box 1450, Alexandria, VA 22313-1450. DO NOT SEND FEES OR COMPLETED FORMS TO THIS ADDRESS. **SEND TO: Commissioner for Patents, P.O. Box 1450, Alexandria, VA 22313-1450.**
If you need assistance in completing the form, call 1-800-PTO-9199 and select option 2.

UNITED STATES PATENT AND TRADEMARK OFFICE

UNITED STATES DEPARTMENT OF COMMERCE
United States Patent and Trademark Office
Address: COMMISSIONER FOR PATENTS
P.O. Box 1450
Alexandria, Virginia 22313-1450
www.uspto.gov

APPLICATION NUMBER	FILING OR 371(C) DATE	FIRST NAMED APPLICANT	ATTY. DOCKET NO./TITLE
14/100,323	12/09/2013	Thien Nguyen	INCEP-001

CONFIRMATION NO. 5734

POA ACCEPTANCE LETTER

28661
Lewis Roca Rothgerber LLP
2440 W. El Camino Real, 6th Floor
Mountain View, CA 94040

OC000000068602423

Date Mailed: 05/27/2014

NOTICE OF ACCEPTANCE OF POWER OF ATTORNEY

This is in response to the Power of Attorney filed 05/19/2014.

The Power of Attorney in this application is accepted. Correspondence in this application will be mailed to the above address as provided by 37 CFR 1.33.

/hchristian/

Office of Data Management, Application Assistance Unit (571) 272-4000, or (571) 272-4200, or 1-888-786-0101

UNITED STATES PATENT AND TRADEMARK OFFICE

UNITED STATES DEPARTMENT OF COMMERCE
United States Patent and Trademark Office
Address: COMMISSIONER FOR PATENTS
P.O. Box 1450
Alexandria, Virginia 22313-1450
www.uspto.gov

APPLICATION NUMBER	FILING OR 371(C) DATE	FIRST NAMED APPLICANT	ATTY. DOCKET NO./TITLE
14/100,323	12/09/2013	Thien Nguyen	INCEP-001

CONFIRMATION NO. 5734

PUBLICATION NOTICE

OC000000068981037

28661
Lewis Roca Rothgerber LLP
4300 Bohannon Drive
Suite 230
Menlo Park, CA 94025

Title:INTRAORAL DENTAL SUCTION AND ISOLATION SYSTEM

Publication No.US-2014-0162209-A1
Publication Date:06/12/2014

NOTICE OF PUBLICATION OF APPLICATION

The above-identified application will be electronically published as a patent application publication pursuant to 37 CFR 1.211, et seq. The patent application publication number and publication date are set forth above.

The publication may be accessed through the USPTO's publically available Searchable Databases via the Internet at www.uspto.gov. The direct link to access the publication is currently http://www.uspto.gov/patft/.

The publication process established by the Office does not provide for mailing a copy of the publication to applicant. A copy of the publication may be obtained from the Office upon payment of the appropriate fee set forth in 37 CFR 1.19(a)(1). Orders for copies of patent application publications are handled by the USPTO's Office of Public Records. The Office of Public Records can be reached by telephone at (703) 308-9726 or (800) 972-6382, by facsimile at (703) 305-8759, by mail addressed to the United States Patent and Trademark Office, Office of Public Records, Alexandria, VA 22313-1450 or via the Internet.

In addition, information on the status of the application, including the mailing date of Office actions and the dates of receipt of correspondence filed in the Office, may also be accessed via the Internet through the Patent Electronic Business Center at www.uspto.gov using the public side of the Patent Application Information and Retrieval (PAIR) system. The direct link to access this status information is currently http://pair.uspto.gov/. Prior to publication, such status information is confidential and may only be obtained by applicant using the private side of PAIR.

Further assistance in electronically accessing the publication, or about PAIR, is available by calling the Patent Electronic Business Center at 1-866-217-9197.

Office of Data Managment, Application Assistance Unit (571) 272-4000, or (571) 272-4200, or 1-888-786-0101

Substitute for Form 1449/PTO				Complete if Known	
INFORMATION DISCLOSURE STATEMENT BY APPLICANT (use as many sheets as necessary)				Application Number	14/100,323
				Filing Date	December 9, 2013
				First Named Inventor:	Thien Nguyen
				Art Unit	3732
				Examiner Name	Hao D. Mai
Sheet	1	**of**	1	Attorney Docket Number	INCEP-001

U.S. PATENT DOCUMENTS

Examiner Initials*	Cite No.[1]	Document Number Number-Kind Code[2] (If known)		Publication Date MM-DD-YYYY	Name of Patentee or Applicant of Cited Document	Pages, Columns, Lines, Where Relevant Passages or Relevant Figures Appear
		US-	2014/0212837	7/31/2014	Nguyen	
		US-	2014/0212838	7/31/2014	Nguyen	
		US-	2014/0212839	7/31/2014	Nguyen	
		US-	2014/0212840	7/31/2014	Nguyen	
		US-	2014/0212841	7/31/2014	Nguyen	
		US-				
		US-				
		US-				
		US-				
		US-				
		US-				
		US-				

FOREIGN PATENT DOCUMENTS

Examiner Initials*	Cite No.[1]	Foreign Patent Document Country Code[3] Number[4] Kind Code[5] (if known)	Publication Date MM-DD-YYYY	Name of Patentee or Applicant of Cited Document	Pages, Columns, Lines, Where Relevant Passages or Relevant Figures Appear	T[6]

Examiner Signature		Date Considered	

*EXAMINER: Initial if reference considered, whether or not citation is in conformance with MPEP 609; Draw line through citation if not in conformance and not considered. Include copy of this form with next communication to applicant. [1]Applicant's unique citation designation number (optional). [2]See Kinds Codes of USPTO Patent Documents at www.uspto.gov or MPEP 901.04. [3]Enter Office that issued the document, by the two-letter code (WIPO Standard ST.3). [4]For Japanese patent documents, the indication of the year of reign of the Emperor must precede the serial number of the patent document. [5]Kind of document by the appropriate symbols as indicated on the document under WIPO Standard ST. 16 if possible. [6]Applicant is to place a check mark here if English language translation is attached.

This collection of information is required by 37 CFR 1.97 and 1.98. The information is required to obtain or retain a benefit by the public which is to file (and by the USPTO to process) an application. Confidentiality is governed by 35 U.S.C. 122 and 37 CFR 1.14. This collection is estimated to take 2 hours to complete including gathering, preparing, and submitting the completed application form to the USPTO. Time will vary depending upon the individual case. Any comments on the amount of time you require to complete this form and/or suggestions for reducing this burden, should be sent to the Chief Information Officer, U.S. Patent and Trademark Office, P.O. Box 1450, Alexandria, VA 22313-1450. DO NOT SENT FEES OR COMPLETED FORMS TO THIS ADDRESS.

SEND TO: Commissioner for Patents, P.O. Box 1450, Alexandria, Virginia 22313-1450.

If you need assistance in completing the form, call 1-800-PTO-9199 (1-800-786-9199) and select option 2.

Based on Form PTO/SB/08A (08-03)

Electronic Acknowledgement Receipt

EFS ID:	20016029
Application Number:	14100323
International Application Number:	
Confirmation Number:	5734
Title of Invention:	INTRAORAL DENTAL SUCTION AND ISOLATION SYSTEM
First Named Inventor/Applicant Name:	Thien Nguyen
Customer Number:	28661
Filer:	Stephanie Simone Buntin/Lea Fong
Filer Authorized By:	Stephanie Simone Buntin
Attorney Docket Number:	INCEP-001
Receipt Date:	05-SEP-2014
Filing Date:	09-DEC-2013
Time Stamp:	17:46:34
Application Type:	Utility under 35 USC 111(a)

Payment information:

Submitted with Payment	no

File Listing:

Document Number	Document Description	File Name	File Size(Bytes)/ Message Digest	Multi Part /.zip	Pages (if appl.)
1	Transmittal Letter	INCEP-001_IDS_Statement_9-2-14.pdf	19345 05805c44d494cf13e36e32014cac2852d7df2441	no	2

Warnings:

Information:

2	Information Disclosure Statement (IDS) Form (SB08)	INCEP-001_IDS_1449_9-2-14.pdf	54033 1bf29c9e5245f1ec7e92448443f1e7aa22730322	no	1

Warnings:

Information:

This is not an USPTO supplied IDS fillable form

Total Files Size (in bytes):	73378

This Acknowledgement Receipt evidences receipt on the noted date by the USPTO of the indicated documents, characterized by the applicant, and including page counts, where applicable. It serves as evidence of receipt similar to a Post Card, as described in MPEP 503.

New Applications Under 35 U.S.C. 111
If a new application is being filed and the application includes the necessary components for a filing date (see 37 CFR 1.53(b)-(d) and MPEP 506), a Filing Receipt (37 CFR 1.54) will be issued in due course and the date shown on this Acknowledgement Receipt will establish the filing date of the application.

National Stage of an International Application under 35 U.S.C. 371
If a timely submission to enter the national stage of an international application is compliant with the conditions of 35 U.S.C. 371 and other applicable requirements a Form PCT/DO/EO/903 indicating acceptance of the application as a national stage submission under 35 U.S.C. 371 will be issued in addition to the Filing Receipt, in due course.

New International Application Filed with the USPTO as a Receiving Office
If a new international application is being filed and the international application includes the necessary components for an international filing date (see PCT Article 11 and MPEP 1810), a Notification of the International Application Number and of the International Filing Date (Form PCT/RO/105) will be issued in due course, subject to prescriptions concerning national security, and the date shown on this Acknowledgement Receipt will establish the international filing date of the application.

IN THE UNITED STATES PATENT AND TRADEMARK OFFICE

Group Art Unit: 3732 Examiner: Thien Nguyen

Serial No.: 14/100,323 Filed: December 9, 2013

In re Application of: Hao D. Mai

Confirmation No.: 5734 Customer No.: 28661

Title: INTRAORAL DENTAL SUCTION AND ISOLATION SYSTEM

SUPPLEMENTAL INFORMATION DISCLOSURE STATEMENT
Under 37 C.F.R. § 1.56, and 1.97-1.98

SIR:

Pursuant to the provisions of 37 C.F.R. §§ 1.56 and 1.97-98 of the Rules of Practice in Patent Cases, enclosed herewith is form PTO-SB-08, listing several references. The Examiner is requested to make these references of official record in the application.

The references cited may be material to examination of the application and are submitted in compliance with the Applicants' duty of disclosure as defined by 37 C.F.R. § 1.56.

No representation is made or intended as to the completeness of this list, nor is the inclusion of any reference on this list an admission that it is prior art or pertinent to this application.

The Commissioner is hereby authorized to charge any necessary fee to Account Number 50-0612.

Respectfully submitted,
LEWIS ROCA ROTHGERBER LLP

Dated: September 2, 2014

/Stephanie S. Buntin/
Stephanie S. Buntin (69,614)
LEWIS ROCA ROTHGERBER LLP
4300 Bohannon Drive, Suite 230
Menlo Park, CA 94025
TEL (650) 391-1380
ipdockets@lrrlaw.com

UNITED STATES PATENT AND TRADEMARK OFFICE

UNITED STATES DEPARTMENT OF COMMERCE
United States Patent and Trademark Office
Address: COMMISSIONER FOR PATENTS
P.O. Box 1450
Alexandria, Virginia 22313-1450
www.uspto.gov

APPLICATION NO.	FILING DATE	FIRST NAMED INVENTOR	ATTORNEY DOCKET NO.	CONFIRMATION NO.
14/100,323	12/09/2013	Thien Nguyen	INCEP-001	5734

28661 7590 10/24/2014
Lewis Roca Rothgerber LLP
4300 Bohannon Drive
Suite 230
Menlo Park, CA 94025

EXAMINER
MAI, HAO D

ART UNIT	PAPER NUMBER
3732	

NOTIFICATION DATE	DELIVERY MODE
10/24/2014	ELECTRONIC

Please find below and/or attached an Office communication concerning this application or proceeding.

The time period for reply, if any, is set in the attached communication.

Notice of the Office communication was sent electronically on above-indicated "Notification Date" to the following e-mail address(es):

ipdockets@lrrlaw.com

Office Action Summary	Application No. 14/100,323	Applicant(s) NGUYEN ET AL.	
	Examiner HAO D. MAI	Art Unit 3732	AIA (First Inventor to File) Status No

-- The MAILING DATE of this communication appears on the cover sheet with the correspondence address --

Period for Reply

A SHORTENED STATUTORY PERIOD FOR REPLY IS SET TO EXPIRE 3 MONTHS FROM THE MAILING DATE OF THIS COMMUNICATION.

- Extensions of time may be available under the provisions of 37 CFR 1.136(a). In no event, however, may a reply be timely filed after SIX (6) MONTHS from the mailing date of this communication.
- If NO period for reply is specified above, the maximum statutory period will apply and will expire SIX (6) MONTHS from the mailing date of this communication.
- Failure to reply within the set or extended period for reply will, by statute, cause the application to become ABANDONED (35 U.S.C. § 133). Any reply received by the Office later than three months after the mailing date of this communication, even if timely filed, may reduce any earned patent term adjustment. See 37 CFR 1.704(b).

Status

1)☒ Responsive to communication(s) filed on *09/05/2014*.

☐ A declaration(s)/affidavit(s) under **37 CFR 1.130(b)** was/were filed on _____.

2a)☒ This action is **FINAL**. 2b)☐ This action is non-final.

3)☐ An election was made by the applicant in response to a restriction requirement set forth during the interview on _____; the restriction requirement and election have been incorporated into this action.

4)☐ Since this application is in condition for allowance except for formal matters, prosecution as to the merits is closed in accordance with the practice under *Ex parte Quayle*, 1935 C.D. 11, 453 O.G. 213.

Disposition of Claims*

5)☒ Claim(s) *1-18* is/are pending in the application.

5a) Of the above claim(s) _____ is/are withdrawn from consideration.

6)☐ Claim(s) _____ is/are allowed.

7)☒ Claim(s) *1-8,11,12 and 15-18* is/are rejected.

8)☒ Claim(s) *9,10,13 and 14* is/are objected to.

9)☐ Claim(s) _____ are subject to restriction and/or election requirement.

* If any claims have been determined allowable, you may be eligible to benefit from the **Patent Prosecution Highway** program at a participating intellectual property office for the corresponding application. For more information, please see http://www.uspto.gov/patents/init_events/pph/index.jsp or send an inquiry to PPHfeedback@uspto.gov.

Application Papers

10)☐ The specification is objected to by the Examiner.

11)☐ The drawing(s) filed on _____ is/are: a)☐ accepted or b)☐ objected to by the Examiner.

Applicant may not request that any objection to the drawing(s) be held in abeyance. See 37 CFR 1.85(a).

Replacement drawing sheet(s) including the correction is required if the drawing(s) is objected to. See 37 CFR 1.121(d).

Priority under 35 U.S.C. § 119

12)☐ Acknowledgment is made of a claim for foreign priority under 35 U.S.C. § 119(a)-(d) or (f).

Certified copies:

a)☐ All b)☐ Some** c)☐ None of the:

1.☐ Certified copies of the priority documents have been received.

2.☐ Certified copies of the priority documents have been received in Application No. _____.

3.☐ Copies of the certified copies of the priority documents have been received in this National Stage application from the International Bureau (PCT Rule 17.2(a)).

** See the attached detailed Office action for a list of the certified copies not received.

Attachment(s)

1) ☒ Notice of References Cited (PTO-892)

2) ☒ Information Disclosure Statement(s) (PTO/SB/08a and/or PTO/SB/08b) Paper No(s)/Mail Date *09/05/2014, 05/13/2014, 05/13/2014*.

3) ☐ Interview Summary (PTO-413) Paper No(s)/Mail Date. _____ .

4) ☐ Other: _____.

DETAILED ACTION

1. The present application is being examined under the pre-AIA first to invent provisions.

Claim Rejections - 35 USC § 112

2. The following is a quotation of the first paragraph of 35 U.S.C. 112(a):

> (a) IN GENERAL.—The specification shall contain a written description of the invention, and of the manner and process of making and using it, in such full, clear, concise, and exact terms as to enable any person skilled in the art to which it pertains, or with which it is most nearly connected, to make and use the same, and shall set forth the best mode contemplated by the inventor or joint inventor of carrying out the invention.

The following is a quotation of the first paragraph of pre-AIA 35 U.S.C. 112:

> The specification shall contain a written description of the invention, and of the manner and process of making and using it, in such full, clear, concise, and exact terms as to enable any person skilled in the art to which it pertains, or with which it is most nearly connected, to make and use the same, and shall set forth the best mode contemplated by the inventor of carrying out his invention.

3. Claim 5 is rejected under 35 U.S.C. 112(a) or 35 U.S.C. 112 (pre-AIA), first paragraph, as failing to comply with the written description requirement. The claim(s) contains subject matter which was not described in the specification in such a way as to reasonably convey to one skilled in the relevant art that the inventor or a joint inventor, or for pre-AIA the inventor(s), at the time the application was filed, had possession of the claimed invention.

The originally filed specification fails to provide support for "the stability bar <u>corresponds to the resilience</u> by which the cheek retractor portion applies pressure during bending of the dental mouthpiece" as recited in claim 5. Such limitation is therefore considered to be new matter.

Claim Rejections - 35 USC § 102

4. The following is a quotation of the appropriate paragraphs of pre-AIA 35 U.S.C. 102 that form the basis for the rejections under this section made in this Office action:

> A person shall be entitled to a paten unless –
> (b) the invention was patented or described in a printed publication in this or a foreign country or in public use or on sale in this country, more than one year prior to the date of application for patent in the United States.

5. **Claim 1-8, 11-12, and 17-18, are rejected under** pre-AIA **35 U.S.C. 102(b) as anticipated by Hirsch et al. (2006/0063129 A1).**

Regarding claim 1, Hirsch et al. discloses a dental mouthpiece 20 composed of a bendable (i.e. flexible) material (Figs. 1-4; paragraph 49). The dental mouthpiece 20 is formed in a curve and comprising: a main body 50 portion at a central part of the curve and comprising a defined pocket (best pointed to by reference numeral 34 or the fluid evacuation channels formed within cavity of mouthpiece 20 as shown in Figure 2). The pocket has an anterior wall inside the curve, a posterior wall outside the curve, and a side wall 54/56n between the anterior wall and the posterior wall, wherein the anterior wall, the posterior wall, and the side wall define an interior portion of the defined pocket (Figs. 1-4). There is further a cheek retractor portion 52 capable of pressing against a cheek of a patient connected to the main body portion and having a surface that is capable of applying pressure when placed in a mouth of the patient (Figs. 1-4; paragraph 51). Since the dental mouthpiece is disclosed to be formed of flexible material (paragraph 49), when the dental mouthpiece 20 is bent, the pressure is based on resilience of the bendable material. The mouthpiece 20 further comprises and a suction connector portion 62 (shown in Fig. 2) for connecting the interior portion of the main body portion to a vacuum suction source 110, wherein the suction connector portion is connected to the main body portion on an end opposite the cheek retractor (Figs. 1-2).

As to claims 2-3, Figure 3 shows plurality of perforation 60 on the anterior/inner curve wall, and Figure 4 shows a plurality of perforations 60 on the posterior/outer curve wall (Figs. 3-4), also note various perforations 58A and/or 68A on the side wall (Figs. 9-10). **As to claim 4**, Figure 2 shows the anterior/inner curve wall includes a slit 58 along a central axis (Fig. 2). **As**

to claim 5, note the stability bar 82 on the interior surface of the posterior wall (Fig. 8A). **As to claim 6**, the main body portion 50, the check retractor portion 52 and the suction connector portion 62 are shown as injection-molded as one piece (Fig. 2). **As to claim 7**, the device is disclosed to be formed of a flexible, translucent, high heat-resistant, autoclavable sliicone-based material of Pebax (paragraph 49, 78). **As to claim 8**, the device comprises various bridge structures (i.e. bridges between evacuation troughs/channels best shown by dash lines and pointed to by reference numerals 60 in Figure 2; bridge 72 shown in Figure 2; bridge extension between reference numerals 80 and 82 in Figure 8A) which protrude from an interior surface of the posterior wall and capable of providing a plurality of spaced contact points that keep the anterior wall separated from the posterior wall during suction **As to claim 11,** the suction connector portion 62 is shown being a channel, thereby having an internal stop (i.e. bridge or shoulder forming channel 62) capable of assisting in positioning the vacuum suction source or a vacuum adaptor. **As to claim 12**, there is further a detachable mouth prop 26 (Figs. 1-2; paragraph 51). **As to claim 17**, the suction connector portion 62 comprises a cutout 62 corresponding to a protrusion 24 on a vacuum adapter for an interlocking fit, there is further a detachable mouth prop 26 (Figs. 1-2; paragraph 51). **As to claim 18**, Figures 8A-8B and 12 show the anterior wall 60 and the posterior wall 56 having different thicknesses.

6. **Claims 1-6, 8, 12, and 15-18, are rejected under** pre-AIA **35 U.S.C. 102(b) as being anticipated by Black et al. (2009/0274991 A1).**

Regarding claim 1, Black et al. discloses a dental mouthpiece 40 composed of a bendable (i.e. flexible) material (Figs. 1-2; paragraph 81). The dental mouthpiece 40 is formed in a curve and comprising: a main body 40 portion at a central part of the curve and comprising a defined pocket, i.e. hollow lumen 41 (Fig. 3A-3B; paragraph 85). The pocket 41 has an

anterior wall 48b inside the curve, a posterior wall 48a outside the curve, and a side wall (peripheral side wall shown in Figures 1 and 6A-6C) between the anterior wall and the posterior wall, wherein the anterior wall, the posterior wall, and the side wall define an interior portion of the defined pocket 41. There is further a cheek retractor portion 240b capable of pressing against a cheek of a patient connected to the main body portion and having a surface that is capable of applying pressure when placed in a mouth of the patient (Fig. 4C, 13, 27A-27B). Since the dental mouthpiece is disclosed to be formed of flexible material when the dental mouthpiece is bent, the pressure is based on resilience of the bendable material. The mouthpiece further comprises and a suction connector portion 46 (shown in Fig. 3A) for connecting the interior portion of the main body portion to a vacuum suction source, wherein the suction connector portion is connected to the main body portion on an end opposite the cheek retractor (Fig. 3A).

As to claims 2-3, Figure 4C shows plurality of perforation on the anterior/inner curve wall, and Figure 4 shows a plurality of perforations on the posterior/outer curve wall; also note perforations 62 on the side wall (Fig. 6A). **As to claim 4**, the anterior/inner curve wall includes various slits along a central axis (e.g. slit 49 in Fig. 3B, slits between 248 and 240e in Figs. 4A-4B, slits 243 in Fig. 4C, slit 641 in Fig. 26A, all of which are considered to be extending along a central axis). **As to claim 5**, note the stability bars 48c (Fig. 3B) or 348c (Fig. 23A) protruding from an interior surface of the posterior wall (Fig. 3B). **As to claim 6**, the main body portion 40, the check retractor portion 40b, and the suction connector portion 46 are shown as injection-molded as one piece (Fig. 3A, paragraph 79). **As to claim 8**, the stability bars 48c (Fig. 3B) or 348c (Fig. 23A) are considered to be equivalent to the claimed bridge. **As to claim 12**, there is further a detachable mouth prop 10 (Fig. 3A). **As to claims 15-16**, the suction connector portion 46 is an external plug protrusion corresponding to opening 12 in the mouth prop 10 (Fig.

2A), wherein the plug protrusion 46 fits into the opening 12, capable of providing additional crush-resistance and decreased compressibility. **As to claim 17**, the suction connector portion 46 comprises a cutout 47 corresponding to a protrusion 30 on a vacuum adapter for an interlocking fit (Figs. 1-3A). **As to claim 18**, Fig. 24C shows anterior/upper wall and the posterior/lower wall having different thicknesses.

Allowable Subject Matter

7. Claims 9-10 and 13-14 are objected to as being dependent upon a rejected base claim, but would be allowable if rewritten in independent form including all of the limitations of the base claim and any intervening claims.

8. The following is an examiner's statement of reasons for allowance: the prior arts fail to disclose or reasonably teach of a mouthpiece holding comprising, inter alia: a bridge structure protruding from an interior surface of the posterior wall in a wave shape, wherein the contact points are at crests of the wave shape (claim 9); or the detachable mouth prop comprises a strap configured to fit around the suction connector portion, wherein an eternal surface of the suction connector portion comprises a notch region corresponding to the strap, and wherein external surface of the strap is substantially flush with a remaining external surface of the suction connector portion when the strap sits in the notch region (claim 12), in combination with the elements and their arrangements as set forth in the claims.

Response to Arguments

9. Applicant's arguments with respect to the amendments made to the claims have been fully considered and are persuasive as having overcome the previous ground(s) of rejection

under Rhoades. However, upon further consideration, a new ground(s) of rejection is made in view of Hirsch et al. and Black et al. as detailed above.

Conclusion

10. Applicant's amendment necessitated the new ground(s) of rejection presented in this Office action. Accordingly, **THIS ACTION IS MADE FINAL**. See MPEP § 706.07(a). Applicant is reminded of the extension of time policy as set forth in 37 CFR 1.136(a).

11. A shortened statutory period for reply to this final action is set to expire THREE MONTHS from the mailing date of this action. In the event a first reply is filed within TWO MONTHS of the mailing date of this final action and the advisory action is not mailed until after the end of the THREE-MONTH shortened statutory period, then the shortened statutory period will expire on the date the advisory action is mailed, and any extension fee pursuant to 37 CFR 1.136(a) will be calculated from the mailing date of the advisory action. In no event, however, will the statutory period for reply expire later than SIX MONTHS from the date of this final action.

12. The prior art made of record and not relied upon is considered pertinent to applicant's disclosure. Any inquiry concerning this communication or earlier communications from the examiner should be directed to Examiner Hao D. Mai whose telephone number is (571) 270-3002. The examiner can normally be reached on Monday-Friday 8:00AM – 4:30PM. If attempts to reach the examiner by telephone are unsuccessful, please contact the examiner's supervisor, Cris Rodriguez, at (571) 272-4964. The fax phone number for the organization where this application or proceeding is assigned is 571-273-8300.

13. Information regarding the status of an application may be obtained from the Patent Application Information Retrieval (PAIR) system. Status information for published

applications may be obtained from either Private PAIR or Public PAIR. Status information for unpublished applications is available through Private PAIR only. For more information about the PAIR system, see http://pair-direct.uspto.gov. Should you have questions on access to the Private PAIR system, contact the Electronic Business Center (EBC) at 866-217-9197 (toll-free). If you would like assistance from a USPTO Customer Service Representative or access to the automated information system, call 800-786-9199 (IN USA OR CANADA) or 571-272-1000.

/Hao D Mai/
Examiner, Art Unit 3732

/Cris L. Rodriguez/
Supervisory Patent Examiner, Art Unit 3732

Notice of References Cited	Application/Control No. 14/100,323	Applicant(s)/Patent Under Reexamination NGUYEN ET AL.	
	Examiner HAO D. MAI	Art Unit 3732	Page 1 of 1

U.S. PATENT DOCUMENTS

*		Document Number Country Code-Number-Kind Code	Date MM-YYYY	Name	Classification
*	A	US-2,937,445 A	05-1960	ERICKSON NORMAN R	433/93
*	B	US-3,768,477 A	10-1973	Anders et al.	433/91
*	C	US-3,924,333 A	12-1975	Erickson, Norman	433/93
*	D	US-4,024,642 A	05-1977	Zorovich, Dan	433/93
*	E	US-6,213,772 B1	04-2001	Costello, William J.	433/93
*	F	US-2006/0063129 A1	03-2006	Hirsch, James A.	433/093
*	G	US-2008/0318183 A1	12-2008	Suzman, Colin	433/93
*	H	US-8,029,280 B2	10-2011	Black et al.	433/93
	I	US-			
	J	US-			
	K	US-			
	L	US-			
	M	US-			

FOREIGN PATENT DOCUMENTS

*		Document Number Country Code-Number-Kind Code	Date MM-YYYY	Country	Name	Classification
	N					
	O					
	P					
	Q					
	R					
	S					
	T					

NON-PATENT DOCUMENTS

*		Include as applicable: Author, Title Date, Publisher, Edition or Volume, Pertinent Pages)
	U	
	V	
	W	
	X	

*A copy of this reference is not being furnished with this Office action. (See MPEP § 707.05(a).)
Dates in MM-YYYY format are publication dates. Classifications may be US or foreign.

Search Notes	Application/Control No.	Applicant(s)/Patent Under Reexamination
	14100323	NGUYEN ET AL.
	Examiner	**Art Unit**
	HAO D MAI	3732

CPC- SEARCHED

Symbol	Date	Examiner

CPC COMBINATION SETS - SEARCHED

Symbol	Date	Examiner

US CLASSIFICATION SEARCHED

Class	Subclass	Date	Examiner
433	91-96, 140, 229	05/05/2014	HDM
	Update Search	10/20/2014	HDM

SEARCH NOTES

Search Notes	Date	Examiner
Inventor Search	05/05/2014	HDM
Plus Search	05/05/2014	HDM
Update Search	10/20/2014	HDM

INTERFERENCE SEARCH

US Class/ CPC Symbol	US Subclass / CPC Group	Date	Examiner

Index of Claims	Application/Control No.	Applicant(s)/Patent Under Reexamination
	14100323	NGUYEN ET AL.
	Examiner	**Art Unit**
	HAO D MAI	3732

✓	Rejected	-	Cancelled	N	Non-Elected	A	Appeal
=	Allowed	÷	Restricted	I	Interference	O	Objected

☐ Claims renumbered in the same order as presented by applicant ☐ CPA ☐ T.D. ☐ R.1.47

CLAIM		DATE								
Final	Original	05/05/2014	10/20/2014							
	1	✓	✓							
	2	✓	✓							
	3	✓	✓							
	4	✓	✓							
	5	✓	✓							
	6	✓	✓							
	7	✓	✓							
	8	✓	✓							
	9	✓	O							
	10	✓	O							
	11	✓	✓							
	12	✓	✓							
	13	✓	O							
	14	✓	O							
	15	✓	✓							
	16	✓	✓							
	17	✓	✓							
	18	✓	✓							

PATENT
Docket No.: INCEP-001

IN THE UNITED STATES PATENT AND TRADEMARK OFFICE

Group Art Unit: 3732 Examiner: Hao D. Mai

Serial No.: 14/100,323 Filed: December 9, 2013

In re Application of: Thien Nguyen

Confirmation No.: 5734 Customer No.: 28661

Title: INTRAORAL DENTAL SUCTION AND ISOLATION SYSTEM

List of Co-Pending Patents or Patent Applications That May Be Directed Towards Similar Subject Matter

Examiner's Initials	Application Number	Docket Number	First-Named Inventor	Title	Filing Date
	14/228,046	INCEP-001COA	Thien Nguyen	INTRAORAL DEVICE WITH MESH	March 27, 2014
	14/228,050	INCEP-001COB	Thien Nguyen	INTRAORAL DEVICE WITH BRIDGE	March 27, 2014
	14/228,054	INCEP-001COC	Thien Nguyen	INTRAORAL DEVICE WITH STABILITY START	March 27, 2014
	14/228,057	INCEP-001COD	Thien Nguyen	INTRAORAL DEVICE WITH SLIT	March 27, 2014
	14/228,061	INCEP-001COE	Thien Nguyen	INTRAORAL DEVICE WITH DETACHABLE MOUTH PROP	March 27, 2014
Examiner's Signature:	/Hao D. Mai/				Date: 10/20/2014

ALL REFERENCES CONSIDERED EXCEPT WHERE LINED THROUGH. /H.D.M

Substitute for Form 1449/PTO

INFORMATION DISCLOSURE STATEMENT BY APPLICANT

(use as many sheets as necessary)

Complete if Known	
Application Number	14/100,323
Filing Date	December 9, 2013
First Named Inventor:	Thien Nguyen
Art Unit	3732
Examiner Name	Hao D. Mai
Attorney Docket Number	INCEP-001

Sheet	1	of	1

U.S. PATENT DOCUMENTS

Examiner Initials*	Cite No.[1]	Document Number Number-Kind Code[2] (If known)		Publication Date MM-DD-YYYY	Name of Patentee or Applicant of Cited Document	Pages, Columns, Lines, Where Relevant Passages or Relevant Figures Appear
		US-	2014/0212837	7/31/2014	Nguyen	
		US-	2014/0212838	7/31/2014	Nguyen	
		US-	2014/0212839	7/31/2014	Nguyen	
		US-	2014/0212840	7/31/2014	Nguyen	
		US-	2014/0212841	7/31/2014	Nguyen	
		US-				
		US-				
		US-				
		US-				
		US-				
		US-				
		US-				

FOREIGN PATENT DOCUMENTS

Examiner Initials*	Cite No.[1]	Foreign Patent Document Country Code[3] Number[4] Kind Code[5] (if known)	Publication Date MM-DD-YYYY	Name of Patentee or Applicant of Cited Document	Pages, Columns, Lines, Where Relevant Passages or Relevant Figures Appear	T[6]

Examiner Signature	/Hao D. Mai/	Date Considered	10/20/2014

*EXAMINER: Initial if reference considered, whether or not citation is in conformance with MPEP 609; Draw line through citation if not in conformance and not considered. Include copy of this form with next communication to applicant. [1]Applicant's unique citation designation number (optional). [2]See Kinds Codes of USPTO Patent Documents at www.uspto.gov or MPEP 901.04. [3]Enter Office that issued the document, by the two-letter code (WIPO Standard ST.3). [4]For Japanese patent documents, the indication of the year of reign of the Emperor must precede the serial number of the patent document. [5]Kind of document by the appropriate symbols as indicated on the document under WIPO Standard ST. 16 if possible. [6]Applicant is to place a check mark here if English language translation is attached.

This collection of information is required by 37 CFR 1.97 and 1.98. The information is required to obtain or retain a benefit by the public which is to file (and by the USPTO to process) an application. Confidentiality is governed by 35 U.S.C. 122 and 37 CFR 1.14. This collection is estimated to take 2 hours to complete including gathering, preparing, and submitting the completed application form to the USPTO. Time will vary depending upon the individual case. Any comments on the amount of time you require to complete this form and/or suggestions for reducing this burden, should be sent to the Chief Information Officer, U.S. Patent and Trademark Office, P.O. Box 1450, Alexandria, VA 22313-1450. DO NOT SENT FEES OR COMPLETED FORMS TO THIS ADDRESS.

SEND TO: Commissioner for Patents, P.O. Box 1450, Alexandria, Virginia 22313-1450.

If you need assistance in completing the form, call 1-800-PTO-9199 (1-800-786-9199) and select option 2.

Based on Form PTO/SB/08A (08-03)

ALL REFERENCES CONSIDERED EXCEPT WHERE LINED THROUGH. /H.D.M./

EAST Search History

EAST Search History (Prior Art)

Ref #	Hits	Search Query	DBs	Default Operator	Plurals	Time Stamp
S26	47	hirsch.in. and intraoral	US-PGPUB; USPAT; USOCR; FPRS; EPO; JPO	ADJ	ON	2014/10/15 12:51
S27	14	hirsch.in. and intraoral	US-PGPUB	ADJ	ON	2014/10/15 12:51
S28	18	hirsch.in. and intraoral	USPAT	ADJ	ON	2014/10/15 12:51
S29	48	("1122086" | "2510125" | "2937445" | "3090122" | "3396468" | "3881254" | "4017975" | "4167814" | "4259067" | "4495945" | "4592344" | "4643172" | "4802851" | "4865545" | "4975057" | "4992046" | "4996976" | "5009595" | "5071347" | "5078602" | "5127411" | "5152686" | "5232362" | "5281134" | "5462435" | "5513986" | "5516286" | "5588836" | "5762496" | "5769635" | "5873718" | "6022214" | "6213772" | "6338627" | "6575746" | "6908308" | "6974321" | "7293990").PN. OR ("7748981").URPN.	US-PGPUB; USPAT; USOCR	ADJ	ON	2014/10/15 13:48
S30	36	("3090122").URPN.	USPAT	ADJ	ON	2014/10/15 13:49
S31	168	(bite or biteblock or intraoral or mouth or mouthpiece) same ((strap or opening or ring) with flush$3 with (groove or recess))	US-PGPUB; USPAT; USOCR; FPRS; EPO; JPO; DERWENT; IBM_TDB	ADJ	ON	2014/10/15 13:59
S32	1	(12/284900).APP.	USPAT; USOCR	ADJ	ON	2014/10/20 07:32
S33	47	("20040033468" | "20060063129" | "20070231773" | "20070259307" | "20080318183" | "2111859" | "2937445" | "3090122" | "4024642" | "4167814" | "4259067" | "4425911" | "4583527" | "4802851" | "4906188" | "4975057" | "5152686" | "5232362" | "5366489" | "5438976" | "5496363" | "5513986" | "5516286" | "5588836" | "5725370" | "5762496" | "5873718" | "5924866" | "6022214" | "6149430" | "6213772" | "6244866" | "6338627" | "6379147" | "6575746" | "6634884" | "6652276" | "6655960" | "6939134" | "6974321" | "6981870" | "7293990").PN. OR ("8029280").URPN.	US-PGPUB; USPAT; USOCR	ADJ	ON	2014/10/20 07:32

S34	18	(bite or biteblock or intraoral or mouth or mouthpiece) same (snap with flush$3 with (groove or recess))	US-PGPUB; USPAT; USOCR; FPRS; EPO; JPO; DERWENT; IBM_TDB	ADJ	ON	2014/10/20 07:37
S35	7	"433".clas. and (snap with flush$3 with (groove or recess))	US-PGPUB; USPAT; USOCR; FPRS; EPO; JPO; DERWENT; IBM_TDB	ADJ	ON	2014/10/20 07:38
S36	208	"433".clas. and (flush$3 with (groove or recess))	US-PGPUB; USPAT; USOCR; FPRS; EPO; JPO; DERWENT; IBM_TDB	ADJ	ON	2014/10/20 07:39
S37	17	"433".clas. and ((flush$3 with (groove or recess)) same (handle or handpiece))	US-PGPUB; USPAT; USOCR; FPRS; EPO; JPO; DERWENT; IBM_TDB	ADJ	ON	2014/10/20 07:39
S38	65	"433".clas. and (flush$3 with (groove or recess)) and (handle or handpiece)	US-PGPUB; USPAT; USOCR; FPRS; EPO; JPO; DERWENT; IBM_TDB	ADJ	ON	2014/10/20 07:40
S39	71	"433".clas. and (flush$3 with (groove or recess or notch)) and (handle or handpiece)	US-PGPUB; USPAT; USOCR; FPRS; EPO; JPO; DERWENT; IBM_TDB	ADJ	ON	2014/10/20 07:43
S40	224	"433".clas. and (flush$3 with (groove or recess or notch))	US-PGPUB; USPAT; USOCR; FPRS; EPO; JPO; DERWENT; IBM_TDB	ADJ	ON	2014/10/20 07:43
S41	14	"433".clas. and (flush$3 with (groove or recess or notch) with (ring or strap))	US-PGPUB; USPAT; USOCR; FPRS; EPO; JPO; DERWENT; IBM_TDB	ADJ	ON	2014/10/20 07:44
S42	1	("20140162209").PN.	US-PGPUB; USPAT; USOCR; FPRS; EPO; JPO	OR	OFF	2014/10/20 09:44

S43	54	(US-20080053434-$ or US-20080166684-$ or US-20080318183-$ or US-20090123886-$ or US-20110311942-$ or US-20060063129-$ or US-20090274991-$ or US-20010008752-$ or US-20140162209-$ or US-20140212841-$).did. or (US-3090122-$ or US-3802081-$ or US-3924333-$ or US-4053984-$ or US-4192071-$ or US-4215984-$ or US-4259067-$ or US-5078602-$ or US-5094616-$ or US-5152686-$ or US-5232362-$ or US-5516286-$ or US-6974321-$ or US-7293990-$ or US-7611354-$ or US-7748981-$ or US-8029280-$ or US-8057228-$ or US-3171203-$ or US-6022214-$ or US-1122086-$ or US-4802851-$ or US-4017975-$ or US-4167814-$ or US-5513986-$ or US-5890899-$).did. or (US-6575746-$ or US-D495799-$ or US-6267591-$ or US-6338627-$ or US-6908308-$ or US-3768477-$ or US-8297973-$ or US-3877691-$ or US-4718662-$ or US-6213772-$ or US-3396468-$ or US-2111859-$ or US-2937445-$ or US-4024642-$ or US-4425911-$ or US-6652276-$).did. or (US-2937445-$ or US-2250285-$).did.	US-PGPUB; USPAT; USOCR	ADJ	ON	2014/10/20 09:54
S44	10	S43 and transparent	US-PGPUB; USPAT; USOCR; FPRS; EPO; JPO	ADJ	ON	2014/10/20 09:54

10/20/2014 10:26:48 AM
C:\Users\hmai1\Documents\EAST\Workspaces\14100323.wsp

Substitute for Form 1449/PTO

INFORMATION DISCLOSURE STATEMENT BY APPLICANT

(use as many sheets as necessary)

Complete if Known	
Application Number	14/100,323
Filing Date	December 9, 2013
First Named Inventor:	Thien Nguyen
Art Unit	3732
Examiner Name	Hao D. Mai
Attorney Docket Number	INCEP-001

Sheet	1	of	1

U.S. PATENT DOCUMENTS

Examiner Initials*	Cite No.[1]	Document Number Number-Kind Code[2] (If known)		Publication Date MM-DD-YYYY	Name of Patentee or Applicant of Cited Document	Pages, Columns, Lines, Where Relevant Passages or Relevant Figures Appear
		US-	D497,426	10/19/2004	Hirsch et al.	
		US-	D615,203	5/4/2010	Hirsch et al.	
		US-	D696,779	12/31/2013	Hirsch et al.	
		US-	6,022,214	2/8/2000	Hirsch et al.	
		US-	6,338,627	1/15/2002	Hirsch et al.	
		US-	6,575,746	6/10/2003	Hirsch et al.	
		US-	6,908,308	6/21/2005	Hirsch et al.	
		US-	7,287,981	10/30/2007	Hirsch	
		US-	8,057,227	11/15/2011	Hirsch et al.	
		US-	8,057,228	11/15/2011	Hirsch et al.	
		US-	8,075,310	12/13/2011	Hirsch et al.	
		US-	8,297,973	10/30/2012	Hirsch et al.	
		US-	8,529,256	9/10/2013	Hirsch et al.	
		US-	2011/0207076	8/25/2011	Hirsch et al.	
		US-				
		US-				
		US-				
		US-				
		US-				
		US-				
		US-				
		US-				
		US-				
		US-				
		US-				
		US-				
		US-				
		US-				
		US-				
		US-				

Examiner Signature	/Hao D. Mai/	Date Considered	10/20/2014

*EXAMINER: Initial if reference considered, whether or not citation is in conformance with MPEP 609; Draw line through citation if not in conformance and not considered. Include copy of this form with next communication to applicant. [1]Applicant's unique citation designation number (optional). [2]See Kinds Codes of USPTO Patent Documents at www.uspto.gov or MPEP 901.04. [3]Enter Office that issued the document, by the two-letter code (WIPO Standard ST.3). [4]For Japanese patent documents, the indication of the year of reign of the Emperor must precede the serial number of the patent document. [5]Kind of document by the appropriate symbols as indicated on the document under WIPO Standard ST. 16 if possible. [6]Applicant is to place a check mark here if English language translation is attached.

This collection of information is required by 37 CFR 1.97 and 1.98. The information is required to obtain or retain a benefit by the public which is to file (and by the USPTO to process) an application. Confidentiality is governed by 35 U.S.C. 122 and 37 CFR 1.14. This collection is estimated to take 2 hours to complete including gathering, preparing, and submitting the completed application form to the USPTO. Time will vary depending upon the individual case. Any comments on the amount of time you require to complete this form and/or suggestions for reducing this burden, should be sent to the Chief Information Officer, U.S. Patent and Trademark Office, P.O. Box 1450, Alexandria, VA 22313-1450. DO NOT SENT FEES OR COMPLETED FORMS TO THIS ADDRESS.
SEND TO: Commissioner for Patents, P.O. Box 1450, Alexandria, Virginia 22313-1450.
If you need assistance in completing the form, call 1-800-PTO-9199 (1-800-786-9199) and select option 2.

Based on Form PTO/SB/08A (08-03)

ALL REFERENCES CONSIDERED EXCEPT WHERE LINED THROUGH. /H.D.M./

IN THE UNITED STATES PATENT AND TRADEMARK OFFICE

APPLICANT(S):	Thien Nguyen et al.
APPLICATION NO.:	14/100,323
FILING DATE:	December 9, 2013
TITLE:	Intraoral Dental Suction and Isolation System
ART UNIT:	3732
EXAMINER:	Hao D. Mai
CONFIRM. NO.:	5734
ATTY.DKT.NO.:	INCEP-001

MAIL STOP AF
COMMISSIONER FOR PATENTS
P.O. BOX 1450
ALEXANDRIA, VA 22313-1450

AMENDMENT B

Examiner Mai:

In response to the office action dated October 24, 2014 (*Office Action*), please enter the following **amendments** to the **claims**, which commence on **page two**. The Applicants' **remarks** and **conclusion** appear beginning on **pages eight** and **nine**, respectively.

IN THE CLAIMS

PLEASE AMEND THE CLAIMS AS FOLLOWS:

1. (currently amended) A dental mouthpiece composed of a bendable material, the dental mouthpiece formed in a curve and comprising:

a main body portion at a central part of the curve and comprising a defined pocket having an anterior wall inside the curve, a posterior wall outside the curve, and a side wall in between the anterior wall and the posterior wall, wherein the anterior wall, the posterior wall, and the side wall define an interior portion of the defined pocket<u>, wherein the posterior wall comprises a bridge structure protruding from an interior surface of the posterior wall, the protruding bridge structure comprising a plurality of spaced contact points that keep the anterior wall separated from the posterior wall during suction, wherein the spaced contact points are at crests of the bridge structure, and wherein a plurality of troughs between the spaced contact points allow for suction through the bridge structure</u>;

a cheek retractor portion connected to the main body portion and having a surface that applies pressure when the dental mouthpiece is bent, wherein the pressure is based on resilience of the bendable material; and

a suction connector portion for connecting the interior portion of the main body portion to a vacuum suction source, wherein the suction connector portion is connected to the main body portion on an end opposite the cheek retractor.

2. (original) The mouthpiece of claim 1, wherein the side wall includes a plurality of perforations.

3. (original) The mouthpiece of claim 1, wherein the anterior wall and the posterior wall each includes a plurality of perforations.

4. (original) The mouthpiece of claim 1, wherein the anterior wall further includes a slit along a central axis.

5. (currently amended) The mouthpiece of claim 1, further comprising a stability bar protruding from an interior surface of the posterior wall, wherein a thickness of the stability bar ~~corresponds to the resilience by which the cheek retractor portion applies pressure~~ reinforces stability during bending of the dental mouthpiece.

6. (previously presented) The mouthpiece of claim 1, wherein the main body portion, the cheek retractor portion, and the suction connector portion are injection-molded as one piece.

7. (previously presented) The mouthpiece of claim 1, wherein the material is a flexible, translucent, high heat-resistant, autoclavable silicone-based material.

8. – 10. (cancelled)

11. (previously presented) The mouthpiece of claim 1, wherein the suction connector portion comprises an internal stop to assist in positioning of the vacuum suction source or a vacuum adaptor.

12. (original) The mouthpiece of claim 1, further comprising a detachable mouth prop.

13. (original) The mouthpiece of claim 12, wherein the detachable mouth prop comprises a strap configured to fit around the suction connector portion, wherein an external surface of the suction connector portion comprises a notch region corresponding to the strap, and wherein an external surface of the strap is substantially flush with a remaining external surface of the suction connector portion when the strap sits in the notch region.

14. (previously presented) The mouthpiece of claim 13, wherein the strap and other portions of the mouth prop are injection-molded as a single piece.

15. (previously presented) The mouthpiece of claim 12, wherein the suction connector portion further comprises an external plug protrusion corresponding to an opening in the mouth prop.

16. (previously presented) The mouthpiece of claim 15, wherein the plug protrusion fits into the opening to provide additional crush-resistance and decreased compressibility.

17. (original) The mouthpiece of claim 1, wherein the suction connector portion comprises a cutout corresponding to a protrusion on a vacuum adapter for an interlocking fit.

18. (original) The mouthpiece of claim 1, wherein the anterior wall and the posterior wall have different thicknesses.

19. (previously presented) The mouthpiece of claim 1, wherein the main body portion comprises:

a base portion connected to the suction connector portion at a first end,

a cheek retractor connector portion connected to a second end of the base portion, the second end opposite the first end of the base portion, wherein the cheek retractor connector portion is narrower than the base portion, and the cheek retractor connects to main body portion at the cheek retractor connector portion.

20. (previously presented) The mouthpiece of claim 1, wherein one or more of the walls is a protective wall, and wherein debris external to mouthpiece is subject to being caught by suction and/or by the protective wall.

21. (new) A dental mouthpiece composed of a bendable material, the dental mouthpiece formed in a curve and comprising:

a main body portion at a central part of the curve and comprising a defined pocket having an anterior wall inside the curve, a posterior wall outside the curve, and a side wall in between the anterior wall and the posterior wall, wherein the anterior wall, the posterior wall, and the side wall define an interior portion of the defined pocket;

a cheek retractor portion connected to the main body portion and having a surface that applies pressure when the dental mouthpiece is bent, wherein the pressure is based on resilience of the bendable material;

a suction connector portion for connecting the interior portion of the main body portion to a vacuum suction source, wherein the suction connector portion is connected to the main body portion on an end opposite the cheek retractor; and

a detachable mouth prop comprising a strap configured to fit around the suction connector portion, wherein an external surface of the suction connector portion comprises a notch region corresponding to the strap, and wherein an external surface of the strap is substantially flush with a remaining external surface of the suction connector portion when the strap sits in the notch region.

22. (new) The mouthpiece of claim 22, wherein the side wall includes a plurality of perforations.

23. (new) The mouthpiece of claim 22, wherein the anterior wall and the posterior wall each includes a plurality of perforations.

24. (new) The mouthpiece of claim 22, wherein the anterior wall further includes a slit along a central axis.

25. (new) The mouthpiece of claim 22, further comprising a stability bar protruding from an interior surface of the posterior wall, wherein a thickness of the stability bar reinforces stability during bending of the dental mouthpiece.

26. (new) The mouthpiece of claim 22, wherein the main body portion, the cheek retractor portion, and the suction connector portion are injection-molded as one piece.

27. (new) The mouthpiece of claim 22, wherein the material is an autoclavable silicone-based material.

28. (new) The mouthpiece of claim 22, further comprising a bridge structure protruding from an interior surface of the posterior wall, the protruding bridge structure comprising a plurality of spaced contact points that keep the anterior wall separated from the posterior wall during suction.

29. (new) The mouthpiece of claim 28, wherein the bridge structure protrudes from the interior surface of the posterior wall in a wave shape, and wherein the contact points are at crests of the wave shape.

30. (new) The mouthpiece of claim 29, wherein troughs of the wave shape allow suction through the bridge structure.

31. (new) The mouthpiece of claim 22, wherein the suction connector portion comprises an internal stop to assist in positioning of the vacuum suction source or a vacuum adaptor.

32. (new) The mouthpiece of claim 22, wherein the strap and other portions of the mouth prop are injection-molded as a single piece.

33. (new) The mouthpiece of claim 22, wherein the suction connector portion further comprises an external plug protrusion corresponding to an opening in the mouth prop.

34. (new) The mouthpiece of claim 33, wherein the plug protrusion fits into the opening to provide additional crush-resistance and decreased compressibility.

35. (new) The mouthpiece of claim 22, wherein the suction connector portion comprises a cutout corresponding to a protrusion on a vacuum adapter for an interlocking fit.

36. (new) The mouthpiece of claim 22, wherein the anterior wall and the posterior wall have different thicknesses.

37. (new) The mouthpiece of claim 22, wherein the main body portion comprises:

a base portion connected to the suction connector portion at a first end,

a cheek retractor connector portion connected to a second end of the base portion, the second end opposite the first end of the base portion, wherein the cheek retractor connector portion is narrower than the base portion, and the cheek retractor connects to main body portion at the cheek retractor connector portion.

38. (new) The mouthpiece of claim 22, wherein one or more of the walls is a protective wall, and wherein debris external to mouthpiece is subject to being caught by suction and/or by the protective wall.

REMARKS

Allowable Subject Matter

The Examiner indicates that claims 9-10 and 13-14 would be allowable if rewritten in independent form including all the limitations of the base claim and any intervening claims. *Office Action*, 6. The Applicants have incorporated the limitations of claims 9-10 into independent claim 1 and have rewritten claim 13 in independent form as claim 21. As such, all independent claims now recite subject matter identified as allowable by the Examiner. As all other claims are dependent from a respective independent claims, they are also allowable for at least the same reasons.

Rejection under 35 U.S.C. § 112 , ¶ 1

The Examiner rejects claim 5 for lack of written description. *Office Action*, 2. The Applicants have amended claim 5 to adhere more closely to the specification and therefore submit the Section 112 rejection has been overcome.

CONCLUSION

The Applicants have incorporated subject matter that the Examiner has identified as allowable into the independent claims. As such, the independent claims are now allowable. Any claim dependent upon one of the aforementioned independent claims—either directly or via an intermediate dependent claim—is allowable for at least the same reasons as the claim from which it depends.

The Applicants therefore contend the present application is in condition for allowance. The Examiner is invited to contact the Applicants' undersigned representative with any questions concerning the present amendment.

The Director is authorized to charge any fees associated with or required by this filing to Deposit Account No. 500612, including any extension of time fees required for replying to the Office Action up to the current date.

Respectfully submitted,
Thien Nguyen et al.

October 24, 2014

By: /Tam Thanh Pham/

Tam Thanh Pham, Reg. No. 50,565
Lewis Roca Rothgerber *LLP*
4300 Bohannon Drive, Suite 230
Menlo Park, CA 94025
(T) 650.391.1386
(F) 650.391.1395
ipdockets@lrrlaw.com

Doc Code: A.NE.AFCP
Document Description: After Final Consideration Pilot Program Request

PTO/SB/434 (05-13)

CERTIFICATION AND REQUEST FOR CONSIDERATION UNDER THE AFTER FINAL CONSIDERATION PILOT PROGRAM 2.0

Practitioner Docket No.:	Application No.:	Filing Date:
INCEP-001	14/100,323	December 9, 2013
First Named Inventor:	Title:	
Thien Nguyen	INTRAORAL DENTAL SUCTION AND ISOLATION SYSTEM	

APPLICANT HEREBY CERTIFIES THE FOLLOWING AND REQUESTS CONSIDERATION UNDER THE AFTER FINAL CONSIDERATION PILOT PROGRAM 2.0 (AFCP 2.0) OF THE ACCOMPANYING RESPONSE UNDER 37 CFR 1.116.

1. The above-identified application is (i) an original utility, plant, or design nonprovisional application filed under 35 U.S.C. 111(a) [a continuing application (*e.g.*, a continuation or divisional application) is filed under 35 U.S.C. 111(a) and is eligible under (i)], or (ii) an international application that has entered the national stage in compliance with 35 U.S.C. 371(c).
2. The above-identified application contains an outstanding final rejection.
3. Submitted herewith is a response under 37 CFR 1.116 to the outstanding final rejection. The response includes an amendment to at least one independent claim, and the amendment does not broaden the scope of the independent claim in any aspect.
4. This certification and request for consideration under AFCP 2.0 is the only AFCP 2.0 certification and request filed in response to the outstanding final rejection.
5. Applicant is willing and available to participate in any interview requested by the examiner concerning the present response.
6. This certification and request is being filed electronically using the Office's electronic filing system (EFS-Web).
7. Any fees that would be necessary consistent with current practice concerning responses after final rejection under 37 CFR 1.116, *e.g.*, extension of time fees, are being concurrently filed herewith. [There is no additional fee required to request consideration under AFCP 2.0.]
8. By filing this certification and request, applicant acknowledges the following:
   - Reissue applications and reexamination proceedings are not eligible to participate in AFCP 2.0.
   - The examiner will verify that the AFCP 2.0 submission is compliant, *i.e.*, that the requirements of the program have been met (see items 1 to 7 above). For compliant submissions:
     - The examiner will review the response under 37 CFR 1.116 to determine if additional search and/or consideration (i) is necessitated by the amendment and (ii) could be completed within the time allotted under AFCP 2.0. If additional search and/or consideration is required but cannot be completed within the allotted time, the examiner will process the submission consistent with current practice concerning responses after final rejection under 37 CFR 1.116, *e.g.*, by mailing an advisory action.
     - If the examiner determines that the amendment does not necessitate additional search and/or consideration, or if the examiner determines that additional search and/or consideration is required and could be completed within the allotted time, then the examiner will consider whether the amendment places the application in condition for allowance (after completing the additional search and/or consideration, if required). If the examiner determines that the amendment does not place the application in condition for allowance, then the examiner will contact the applicant and request an interview.
       - The interview will be conducted by the examiner, and if the examiner does not have negotiation authority, a primary examiner and/or supervisory patent examiner will also participate.
       - If the applicant declines the interview, or if the interview cannot be scheduled within ten (10) calendar days from the date that the examiner first contacts the applicant, then the examiner will proceed consistent with current practice concerning responses after final rejection under 37 CFR 1.116.

Signature	Date
/Tam Thahn Pham/	October 24, 2014
Name (Print/Typed) Tam Thanh Pham	Practitioner Registration No. 50565

***Note**: This form must be signed in accordance with 37 CFR 1.33. See 37 CFR 1.4(d) for signature requirements and certifications. Submit multiple forms if more than one signature is required, see below*.*

[✓] * Total of 1 forms are submitted.

Privacy Act Statement

The **Privacy Act of 1974 (P.L. 93-579)** requires that you be given certain information in connection with your submission of the attached form related to a patent application or patent. Accordingly, pursuant to the requirements of the Act, please be advised that: (1) the general authority for the collection of this information is 35 U.S.C. 2(b)(2); (2) furnishing of the information solicited is voluntary; and (3) the principal purpose for which the information is used by the U.S. Patent and Trademark Office is to process and/or examine your submission related to a patent application or patent. If you do not furnish the requested information, the U.S. Patent and Trademark Office may not be able to process and/or examine your submission, which may result in termination of proceedings or abandonment of the application or expiration of the patent.

The information provided by you in this form will be subject to the following routine uses:

1. The information on this form will be treated confidentially to the extent allowed under the Freedom of Information Act (5 U.S.C. 552) and the Privacy Act (5 U.S.C 552a). Records from this system of records may be disclosed to the Department of Justice to determine whether disclosure of these records is required by the Freedom of Information Act.
2. A record from this system of records may be disclosed, as a routine use, in the course of presenting evidence to a court, magistrate, or administrative tribunal, including disclosures to opposing counsel in the course of settlement negotiations.
3. A record in this system of records may be disclosed, as a routine use, to a Member of Congress submitting a request involving an individual, to whom the record pertains, when the individual has requested assistance from the Member with respect to the subject matter of the record.
4. A record in this system of records may be disclosed, as a routine use, to a contractor of the Agency having need for the information in order to perform a contract. Recipients of information shall be required to comply with the requirements of the Privacy Act of 1974, as amended, pursuant to 5 U.S.C. 552a(m).
5. A record related to an International Application filed under the Patent Cooperation Treaty in this system of records may be disclosed, as a routine use, to the International Bureau of the World Intellectual Property Organization, pursuant to the Patent Cooperation Treaty.
6. A record in this system of records may be disclosed, as a routine use, to another federal agency for purposes of National Security review (35 U.S.C. 181) and for review pursuant to the Atomic Energy Act (42 U.S.C. 218(c)).
7. A record from this system of records may be disclosed, as a routine use, to the Administrator, General Services, or his/her designee, during an inspection of records conducted by GSA as part of that agency's responsibility to recommend improvements in records management practices and programs, under authority of 44 U.S.C. 2904 and 2906. Such disclosure shall be made in accordance with the GSA regulations governing inspection of records for this purpose, and any other relevant (*i.e.*, GSA or Commerce) directive. Such disclosure shall not be used to make determinations about individuals.
8. A record from this system of records may be disclosed, as a routine use, to the public after either publication of the application pursuant to 35 U.S.C. 122(b) or issuance of a patent pursuant to 35 U.S.C. 151. Further, a record may be disclosed, subject to the limitations of 37 CFR 1.14, as a routine use, to the public if the record was filed in an application which became abandoned or in which the proceedings were terminated and which application is referenced by either a published application, an application open to public inspection or an issued patent.
9. A record from this system of records may be disclosed, as a routine use, to a Federal, State, or local law enforcement agency, if the USPTO becomes aware of a violation or potential violation of law or regulation.

Electronic Patent Application Fee Transmittal

Application Number:	14100323
Filing Date:	09-Dec-2013
Title of Invention:	INTRAORAL DENTAL SUCTION AND ISOLATION SYSTEM
First Named Inventor/Applicant Name:	Thien Nguyen
Filer:	TamThanh Thi Pham/Nicole Villanueva
Attorney Docket Number:	INCEP-001

Filed as Small Entity

Utility under 35 USC 111(a) Filing Fees

Description	Fee Code	Quantity	Amount	Sub-Total in USD($)
Basic Filing:				
Pages:				
Claims:				
Claims in excess of 20	2202	15	40	600
Miscellaneous-Filing:				
Petition:				
Patent-Appeals-and-Interference:				
Post-Allowance-and-Post-Issuance:				
Extension-of-Time:				

Description	Fee Code	Quantity	Amount	Sub-Total in USD($)
Miscellaneous:				
			Total in USD ($)	**600**

Electronic Acknowledgement Receipt

EFS ID:	20514628
Application Number:	14100323
International Application Number:	
Confirmation Number:	5734
Title of Invention:	INTRAORAL DENTAL SUCTION AND ISOLATION SYSTEM
First Named Inventor/Applicant Name:	Thien Nguyen
Customer Number:	28661
Filer:	TamThanh Thi Pham/Nicole Villanueva
Filer Authorized By:	TamThanh Thi Pham
Attorney Docket Number:	INCEP-001
Receipt Date:	24-OCT-2014
Filing Date:	09-DEC-2013
Time Stamp:	17:23:42
Application Type:	Utility under 35 USC 111(a)

Payment information:

Submitted with Payment	yes
Payment Type	Deposit Account
Payment was successfully received in RAM	$600
RAM confirmation Number	3856
Deposit Account	500612
Authorized User	

The Director of the USPTO is hereby authorized to charge indicated fees and credit any overpayment as follows:

Charge any Additional Fees required under 37 C.F.R. Section 1.16 (National application filing, search, and examination fees)

Charge any Additional Fees required under 37 C.F.R. Section 1.17 (Patent application and reexamination processing fees)

Charge any Additional Fees required under 37 C.F.R. Section 1.19 (Document supply fees)

Charge any Additional Fees required under 37 C.F.R. Section 1.20 (Post Issuance fees)

Charge any Additional Fees required under 37 C.F.R. Section 1.21 (Miscellaneous fees and charges)

File Listing:

Document Number	Document Description	File Name	File Size(Bytes)/ Message Digest	Multi Part /.zip	Pages (if appl.)
1		INCEP-001_Amendment_B_10-24-14.pdf	117605 c0674c4fbc34f9624df86da28fdfa354430e0610	yes	9
	Multipart Description/PDF files in .zip description				
	Document Description		**Start**	**End**	
	Response After Final Action		1	1	
	Claims		2	7	
	Applicant Arguments/Remarks Made in an Amendment		8	9	
Warnings:					
Information:					
2	After Final Consideration Program Request	INCEP-001_AFCP_10-24-14.pdf	155957 4c9ef80bc87240857bd45a2fe9e56704745d63d5	no	2
Warnings:					
Information:					
3	Fee Worksheet (SB06)	fee-info.pdf	29975 b2bf47169fdb49c90474c7bad62b91dd23b76fae	no	2
Warnings:					
Information:					
		Total Files Size (in bytes):	303537		

This Acknowledgement Receipt evidences receipt on the noted date by the USPTO of the indicated documents, characterized by the applicant, and including page counts, where applicable. It serves as evidence of receipt similar to a Post Card, as described in MPEP 503.

New Applications Under 35 U.S.C. 111
If a new application is being filed and the application includes the necessary components for a filing date (see 37 CFR 1.53(b)-(d) and MPEP 506), a Filing Receipt (37 CFR 1.54) will be issued in due course and the date shown on this Acknowledgement Receipt will establish the filing date of the application.

National Stage of an International Application under 35 U.S.C. 371
If a timely submission to enter the national stage of an international application is compliant with the conditions of 35 U.S.C. 371 and other applicable requirements a Form PCT/DO/EO/903 indicating acceptance of the application as a national stage submission under 35 U.S.C. 371 will be issued in addition to the Filing Receipt, in due course.

New International Application Filed with the USPTO as a Receiving Office
If a new international application is being filed and the international application includes the necessary components for an international filing date (see PCT Article 11 and MPEP 1810), a Notification of the International Application Number and of the International Filing Date (Form PCT/RO/105) will be issued in due course, subject to prescriptions concerning national security, and the date shown on this Acknowledgement Receipt will establish the international filing date of the application.

PTO/SB/06 (09-11)
Approved for use through 1/31/2014. OMB 0651-0032
U.S. Patent and Trademark Office; U.S. DEPARTMENT OF COMMERCE
Under the Paperwork Reduction Act of 1995, no persons are required to respond to a collection of information unless it displays a valid OMB control number.

PATENT APPLICATION FEE DETERMINATION RECORD

Substitute for Form PTO-875

Application or Docket Number	Filing Date	
14/100,323	12/09/2013	☐ To be Mailed

ENTITY: ☐ LARGE ☒ SMALL ☐ MICRO

APPLICATION AS FILED – PART I

FOR	(Column 1) NUMBER FILED	(Column 2) NUMBER EXTRA	RATE ($)	FEE ($)
☐ BASIC FEE (37 CFR 1.16(a), (b), or (c))	N/A	N/A	N/A	
☐ SEARCH FEE (37 CFR 1.16(k), (i), or (m))	N/A	N/A	N/A	
☐ EXAMINATION FEE (37 CFR 1.16(o), (p), or (q))	N/A	N/A	N/A	
TOTAL CLAIMS (37 CFR 1.16(i))	minus 20 =	*	x $ =	
INDEPENDENT CLAIMS (37 CFR 1.16(h))	minus 3 =	*	x $ =	
☐ APPLICATION SIZE FEE (37 CFR 1.16(s))	If the specification and drawings exceed 100 sheets of paper, the application size fee due is $310 ($155 for small entity) for each additional 50 sheets or fraction thereof. See 35 U.S.C. 41(a)(1)(G) and 37 CFR 1.16(s).			
☐ MULTIPLE DEPENDENT CLAIM PRESENT (37 CFR 1.16(j))				
* If the difference in column 1 is less than zero, enter "0" in column 2.			TOTAL	

APPLICATION AS AMENDED – PART II

AMENDMENT

10/24/2014	(Column 1) CLAIMS REMAINING AFTER AMENDMENT		(Column 2) HIGHEST NUMBER PREVIOUSLY PAID FOR	(Column 3) PRESENT EXTRA	RATE ($)	ADDITIONAL FEE ($)
Total (37 CFR 1.16(i))	* 35	Minus	** 20	= 15	x $40 =	600
Independent (37 CFR 1.16(h))	* 2	Minus	***3	= 0	x $210 =	0
☐ Application Size Fee (37 CFR 1.16(s))						
☐ FIRST PRESENTATION OF MULTIPLE DEPENDENT CLAIM (37 CFR 1.16(j))						
					TOTAL ADD'L FEE	**600**

AMENDMENT

	(Column 1) CLAIMS REMAINING AFTER AMENDMENT		(Column 2) HIGHEST NUMBER PREVIOUSLY PAID FOR	(Column 3) PRESENT EXTRA	RATE ($)	ADDITIONAL FEE ($)
Total (37 CFR 1.16(i))	*	Minus	**	=	x $ =	
Independent (37 CFR 1.16(h))	*	Minus	***	=	x $ =	
☐ Application Size Fee (37 CFR 1.16(s))						
☐ FIRST PRESENTATION OF MULTIPLE DEPENDENT CLAIM (37 CFR 1.16(j))						
					TOTAL ADD'L FEE	

* If the entry in column 1 is less than the entry in column 2, write "0" in column 3.

** If the "Highest Number Previously Paid For" IN THIS SPACE is less than 20, enter "20".

*** If the "Highest Number Previously Paid For" IN THIS SPACE is less than 3, enter "3".

The "Highest Number Previously Paid For" (Total or Independent) is the highest number found in the appropriate box in column 1.

LIE
/ANGELONA JONES/

This collection of information is required by 37 CFR 1.16. The information is required to obtain or retain a benefit by the public which is to file (and by the USPTO to process) an application. Confidentiality is governed by 35 U.S.C. 122 and 37 CFR 1.14. This collection is estimated to take 12 minutes to complete, including gathering, preparing, and submitting the completed application form to the USPTO. Time will vary depending upon the individual case. Any comments on the amount of time you require to complete this form and/or suggestions for reducing this burden, should be sent to the Chief Information Officer, U.S. Patent and Trademark Office, U.S. Department of Commerce, P.O. Box 1450, Alexandria, VA 22313-1450. DO NOT SEND FEES OR COMPLETED FORMS TO THIS ADDRESS. **SEND TO: Commissioner for Patents, P.O. Box 1450, Alexandria, VA 22313-1450.**

If you need assistance in completing the form, call 1-800-PTO-9199 and select option 2.

UNITED STATES PATENT AND TRADEMARK OFFICE

UNITED STATES DEPARTMENT OF COMMERCE
United States Patent and Trademark Office
Address: COMMISSIONER FOR PATENTS
P.O. Box 1450
Alexandria, Virginia 22313-1450
www.uspto.gov

NOTICE OF ALLOWANCE AND FEE(S) DUE

28661 7590 11/07/2014
Lewis Roca Rothgerber LLP
4300 Bohannon Drive
Suite 230
Menlo Park, CA 94025

EXAMINER
MAI, HAO D

ART UNIT	PAPER NUMBER
3732	

DATE MAILED: 11/07/2014

APPLICATION NO.	FILING DATE	FIRST NAMED INVENTOR	ATTORNEY DOCKET NO.	CONFIRMATION NO.
14/100,323	12/09/2013	Thien Nguyen	INCEP-001	5734

TITLE OF INVENTION: INTRAORAL DENTAL SUCTION AND ISOLATION SYSTEM

APPLN. TYPE	ENTITY STATUS	ISSUE FEE DUE	PUBLICATION FEE DUE	PREV. PAID ISSUE FEE	TOTAL FEE(S) DUE	DATE DUE
nonprovisional	SMALL	$480	$0	$0	$480	02/09/2015

THE APPLICATION IDENTIFIED ABOVE HAS BEEN EXAMINED AND IS ALLOWED FOR ISSUANCE AS A PATENT. PROSECUTION ON THE MERITS IS CLOSED. THIS NOTICE OF ALLOWANCE IS NOT A GRANT OF PATENT RIGHTS. THIS APPLICATION IS SUBJECT TO WITHDRAWAL FROM ISSUE AT THE INITIATIVE OF THE OFFICE OR UPON PETITION BY THE APPLICANT. SEE 37 CFR 1.313 AND MPEP 1308.

THE ISSUE FEE AND PUBLICATION FEE (IF REQUIRED) MUST BE PAID WITHIN THREE MONTHS FROM THE MAILING DATE OF THIS NOTICE OR THIS APPLICATION SHALL BE REGARDED AS ABANDONED. THIS STATUTORY PERIOD CANNOT BE EXTENDED. SEE 35 U.S.C. 151. THE ISSUE FEE DUE INDICATED ABOVE DOES NOT REFLECT A CREDIT FOR ANY PREVIOUSLY PAID ISSUE FEE IN THIS APPLICATION. IF AN ISSUE FEE HAS PREVIOUSLY BEEN PAID IN THIS APPLICATION (AS SHOWN ABOVE), THE RETURN OF PART B OF THIS FORM WILL BE CONSIDERED A REQUEST TO REAPPLY THE PREVIOUSLY PAID ISSUE FEE TOWARD THE ISSUE FEE NOW DUE.

HOW TO REPLY TO THIS NOTICE:

I. Review the ENTITY STATUS shown above. If the ENTITY STATUS is shown as SMALL or MICRO, verify whether entitlement to that entity status still applies.

If the ENTITY STATUS is the same as shown above, pay the TOTAL FEE(S) DUE shown above.

If the ENTITY STATUS is changed from that shown above, on PART B - FEE(S) TRANSMITTAL, complete section number 5 titled "Change in Entity Status (from status indicated above)".

For purposes of this notice, small entity fees are 1/2 the amount of undiscounted fees, and micro entity fees are 1/2 the amount of small entity fees.

II. PART B - FEE(S) TRANSMITTAL, or its equivalent, must be completed and returned to the United States Patent and Trademark Office (USPTO) with your ISSUE FEE and PUBLICATION FEE (if required). If you are charging the fee(s) to your deposit account, section "4b" of Part B - Fee(s) Transmittal should be completed and an extra copy of the form should be submitted. If an equivalent of Part B is filed, a request to reapply a previously paid issue fee must be clearly made, and delays in processing may occur due to the difficulty in recognizing the paper as an equivalent of Part B.

III. All communications regarding this application must give the application number. Please direct all communications prior to issuance to Mail Stop ISSUE FEE unless advised to the contrary.

IMPORTANT REMINDER: Utility patents issuing on applications filed on or after Dec. 12, 1980 may require payment of maintenance fees. It is patentee's responsibility to ensure timely payment of maintenance fees when due.

PART B - FEE(S) TRANSMITTAL

Complete and send this form, together with applicable fee(s), to: Mail **Mail Stop ISSUE FEE**
Commissioner for Patents
P.O. Box 1450
Alexandria, Virginia 22313-1450
or Fax (571)-273-2885

INSTRUCTIONS: This form should be used for transmitting the ISSUE FEE and PUBLICATION FEE (if required). Blocks 1 through 5 should be completed where appropriate. All further correspondence including the Patent, advance orders and notification of maintenance fees will be mailed to the current correspondence address as indicated unless corrected below or directed otherwise in Block 1, by (a) specifying a new correspondence address; and/or (b) indicating a separate "FEE ADDRESS" for maintenance fee notifications.

CURRENT CORRESPONDENCE ADDRESS (Note: Use Block 1 for any change of address)

28661 7590 11/07/2014
Lewis Roca Rothgerber LLP
4300 Bohannon Drive
Suite 230
Menlo Park, CA 94025

Note: A certificate of mailing can only be used for domestic mailings of the Fee(s) Transmittal. This certificate cannot be used for any other accompanying papers. Each additional paper, such as an assignment or formal drawing, must have its own certificate of mailing or transmission.

Certificate of Mailing or Transmission
I hereby certify that this Fee(s) Transmittal is being deposited with the United States Postal Service with sufficient postage for first class mail in an envelope addressed to the Mail Stop ISSUE FEE address above, or being facsimile transmitted to the USPTO (571) 273-2885, on the date indicated below.

(Depositor's name)
(Signature)
(Date)

APPLICATION NO.	FILING DATE	FIRST NAMED INVENTOR	ATTORNEY DOCKET NO.	CONFIRMATION NO.
14/100,323	12/09/2013	Thien Nguyen	INCEP-001	5734

TITLE OF INVENTION: INTRAORAL DENTAL SUCTION AND ISOLATION SYSTEM

APPLN. TYPE	ENTITY STATUS	ISSUE FEE DUE	PUBLICATION FEE DUE	PREV. PAID ISSUE FEE	TOTAL FEE(S) DUE	DATE DUE
nonprovisional	SMALL	$480	$0	$0	$480	02/09/2015

EXAMINER	ART UNIT	CLASS-SUBCLASS
MAI, HAO D	3732	433-093000

1. Change of correspondence address or indication of "Fee Address" (37 CFR 1.363).
❑ Change of correspondence address (or Change of Correspondence Address form PTO/SB/122) attached.
❑ "Fee Address" indication (or "Fee Address" Indication form PTO/SB/47; Rev 03-02 or more recent) attached. **Use of a Customer Number is required.**

2. For printing on the patent front page, list
(1) The names of up to 3 registered patent attorneys or agents OR, alternatively,
(2) The name of a single firm (having as a member a registered attorney or agent) and the names of up to 2 registered patent attorneys or agents. If no name is listed, no name will be printed.
1_____
2_____
3_____

3. ASSIGNEE NAME AND RESIDENCE DATA TO BE PRINTED ON THE PATENT (print or type)
PLEASE NOTE: Unless an assignee is identified below, no assignee data will appear on the patent. If an assignee is identified below, the document has been filed for recordation as set forth in 37 CFR 3.11. Completion of this form is NOT a substitute for filing an assignment.
(A) NAME OF ASSIGNEE (B) RESIDENCE: (CITY and STATE OR COUNTRY)

Please check the appropriate assignee category or categories (will not be printed on the patent) : ❑ Individual ❑ Corporation or other private group entity ❑ Government

4a. The following fee(s) are submitted:
❑ Issue Fee
❑ Publication Fee (No small entity discount permitted)
❑ Advance Order - # of Copies _____

4b. Payment of Fee(s): **(Please first reapply any previously paid issue fee shown above)**
❑ A check is enclosed.
❑ Payment by credit card. Form PTO-2038 is attached.
❑ The Director is hereby authorized to charge the required fee(s), any deficiency, or credits any overpayment, to Deposit Account Number _____ (enclose an extra copy of this form).

5. **Change in Entity Status** (from status indicated above)
❑ Applicant certifying micro entity status. See 37 CFR 1.29 — NOTE: Absent a valid certification of Micro Entity Status (see forms PTO/SB/15A and 15B), issue fee payment in the micro entity amount will not be accepted at the risk of application abandonment.
❑ Applicant asserting small entity status. See 37 CFR 1.27 — NOTE: If the application was previously under micro entity status, checking this box will be taken to be a notification of loss of entitlement to micro entity status.
❑ Applicant changing to regular undiscounted fee status. — NOTE: Checking this box will be taken to be a notification of loss of entitlement to small or micro entity status, as applicable.

NOTE: This form must be signed in accordance with 37 CFR 1.31 and 1.33. See 37 CFR 1.4 for signature requirements and certifications.

Authorized Signature _____ Date _____

Typed or printed name _____ Registration No. _____

PTOL-85 Part B (10-13) Approved for use through 10/31/2013. OMB 0651-0033 U.S. Patent and Trademark Office; U.S. DEPARTMENT OF COMMERCE

UNITED STATES PATENT AND TRADEMARK OFFICE

UNITED STATES DEPARTMENT OF COMMERCE
United States Patent and Trademark Office
Address: COMMISSIONER FOR PATENTS
P.O. Box 1450
Alexandria, Virginia 22313-1450
www.uspto.gov

APPLICATION NO.	FILING DATE	FIRST NAMED INVENTOR	ATTORNEY DOCKET NO.	CONFIRMATION NO.
14/100,323	12/09/2013	Thien Nguyen	INCEP-001	5734

28661 7590 11/07/2014
Lewis Roca Rothgerber LLP
4300 Bohannon Drive
Suite 230
Menlo Park, CA 94025

EXAMINER
MAI, HAO D

ART UNIT	PAPER NUMBER
3732	

DATE MAILED: 11/07/2014

Determination of Patent Term Adjustment under 35 U.S.C. 154 (b)
(Applications filed on or after May 29, 2000)

The Office has discontinued providing a Patent Term Adjustment (PTA) calculation with the Notice of Allowance.

Section 1(h)(2) of the AIA Technical Corrections Act amended 35 U.S.C. 154(b)(3)(B)(i) to eliminate the requirement that the Office provide a patent term adjustment determination with the notice of allowance. See Revisions to Patent Term Adjustment, 78 Fed. Reg. 19416, 19417 (Apr. 1, 2013). Therefore, the Office is no longer providing an initial patent term adjustment determination with the notice of allowance. The Office will continue to provide a patent term adjustment determination with the Issue Notification Letter that is mailed to applicant approximately three weeks prior to the issue date of the patent, and will include the patent term adjustment on the patent. Any request for reconsideration of the patent term adjustment determination (or reinstatement of patent term adjustment) should follow the process outlined in 37 CFR 1.705.

Any questions regarding the Patent Term Extension or Adjustment determination should be directed to the Office of Patent Legal Administration at (571)-272-7702. Questions relating to issue and publication fee payments should be directed to the Customer Service Center of the Office of Patent Publication at 1-(888)-786-0101 or (571)-272-4200.

OMB Clearance and PRA Burden Statement for PTOL-85 Part B

The Paperwork Reduction Act (PRA) of 1995 requires Federal agencies to obtain Office of Management and Budget approval before requesting most types of information from the public. When OMB approves an agency request to collect information from the public, OMB (i) provides a valid OMB Control Number and expiration date for the agency to display on the instrument that will be used to collect the information and (ii) requires the agency to inform the public about the OMB Control Number's legal significance in accordance with 5 CFR 1320.5(b).

The information collected by PTOL-85 Part B is required by 37 CFR 1.311. The information is required to obtain or retain a benefit by the public which is to file (and by the USPTO to process) an application. Confidentiality is governed by 35 U.S.C. 122 and 37 CFR 1.14. This collection is estimated to take 12 minutes to complete, including gathering, preparing, and submitting the completed application form to the USPTO. Time will vary depending upon the individual case. Any comments on the amount of time you require to complete this form and/or suggestions for reducing this burden, should be sent to the Chief Information Officer, U.S. Patent and Trademark Office, U.S. Department of Commerce, P.O. Box 1450, Alexandria, Virginia 22313-1450. DO NOT SEND FEES OR COMPLETED FORMS TO THIS ADDRESS. SEND TO: Commissioner for Patents, P.O. Box 1450, Alexandria, Virginia 22313-1450. Under the Paperwork Reduction Act of 1995, no persons are required to respond to a collection of information unless it displays a valid OMB control number.

Privacy Act Statement

The Privacy Act of 1974 (P.L. 93-579) requires that you be given certain information in connection with your submission of the attached form related to a patent application or patent. Accordingly, pursuant to the requirements of the Act, please be advised that: (1) the general authority for the collection of this information is 35 U.S.C. 2(b)(2); (2) furnishing of the information solicited is voluntary; and (3) the principal purpose for which the information is used by the U.S. Patent and Trademark Office is to process and/or examine your submission related to a patent application or patent. If you do not furnish the requested information, the U.S. Patent and Trademark Office may not be able to process and/or examine your submission, which may result in termination of proceedings or abandonment of the application or expiration of the patent.

The information provided by you in this form will be subject to the following routine uses:

1. The information on this form will be treated confidentially to the extent allowed under the Freedom of Information Act (5 U.S.C. 552) and the Privacy Act (5 U.S.C 552a). Records from this system of records may be disclosed to the Department of Justice to determine whether disclosure of these records is required by the Freedom of Information Act.
2. A record from this system of records may be disclosed, as a routine use, in the course of presenting evidence to a court, magistrate, or administrative tribunal, including disclosures to opposing counsel in the course of settlement negotiations.
3. A record in this system of records may be disclosed, as a routine use, to a Member of Congress submitting a request involving an individual, to whom the record pertains, when the individual has requested assistance from the Member with respect to the subject matter of the record.
4. A record in this system of records may be disclosed, as a routine use, to a contractor of the Agency having need for the information in order to perform a contract. Recipients of information shall be required to comply with the requirements of the Privacy Act of 1974, as amended, pursuant to 5 U.S.C. 552a(m).
5. A record related to an International Application filed under the Patent Cooperation Treaty in this system of records may be disclosed, as a routine use, to the International Bureau of the World Intellectual Property Organization, pursuant to the Patent Cooperation Treaty.
6. A record in this system of records may be disclosed, as a routine use, to another federal agency for purposes of National Security review (35 U.S.C. 181) and for review pursuant to the Atomic Energy Act (42 U.S.C. 218(c)).
7. A record from this system of records may be disclosed, as a routine use, to the Administrator, General Services, or his/her designee, during an inspection of records conducted by GSA as part of that agency's responsibility to recommend improvements in records management practices and programs, under authority of 44 U.S.C. 2904 and 2906. Such disclosure shall be made in accordance with the GSA regulations governing inspection of records for this purpose, and any other relevant (i.e., GSA or Commerce) directive. Such disclosure shall not be used to make determinations about individuals.
8. A record from this system of records may be disclosed, as a routine use, to the public after either publication of the application pursuant to 35 U.S.C. 122(b) or issuance of a patent pursuant to 35 U.S.C. 151. Further, a record may be disclosed, subject to the limitations of 37 CFR 1.14, as a routine use, to the public if the record was filed in an application which became abandoned or in which the proceedings were terminated and which application is referenced by either a published application, an application open to public inspection or an issued patent.
9. A record from this system of records may be disclosed, as a routine use, to a Federal, State, or local law enforcement agency, if the USPTO becomes aware of a violation or potential violation of law or regulation.

Notice of Allowability	Application No. 14/100,323	Applicant(s) NGUYEN ET AL.	
	Examiner HAO D. MAI	Art Unit 3732	AIA (First Inventor to File) Status No

-- The MAILING DATE of this communication appears on the cover sheet with the correspondence address--

All claims being allowable, PROSECUTION ON THE MERITS IS (OR REMAINS) CLOSED in this application. If not included herewith (or previously mailed), a Notice of Allowance (PTOL-85) or other appropriate communication will be mailed in due course. **THIS NOTICE OF ALLOWABILITY IS NOT A GRANT OF PATENT RIGHTS.** This application is subject to withdrawal from issue at the initiative of the Office or upon petition by the applicant. See 37 CFR 1.313 and MPEP 1308.

1. ☒ This communication is responsive to *10/24/2014*.
   ☐ A declaration(s)/affidavit(s) under **37 CFR 1.130(b)** was/were filed on_____.
2. ☐ An election was made by the applicant in response to a restriction requirement set forth during the interview on _____; the restriction requirement and election have been incorporated into this action.
3. ☒ The allowed claim(s) is/are *1-7 and 11-38*. As a result of the allowed claim(s), you may be eligible to benefit from the **Patent Prosecution Highway** program at a participating intellectual property office for the corresponding application. For more information, please see http://www.uspto.gov/patents/init_events/pph/index.jsp or send an inquiry to PPHfeedback@uspto.gov .
4. ☐ Acknowledgment is made of a claim for foreign priority under 35 U.S.C. § 119(a)-(d) or (f).

   Certified copies:

   a) ☐ All b) ☐ Some *c) ☐ None of the:
   1. ☐ Certified copies of the priority documents have been received.
   2. ☐ Certified copies of the priority documents have been received in Application No. _____ .
   3. ☐ Copies of the certified copies of the priority documents have been received in this national stage application from the International Bureau (PCT Rule 17.2(a)).

   * Certified copies not received: _____.

Applicant has THREE MONTHS FROM THE "MAILING DATE" of this communication to file a reply complying with the requirements noted below. Failure to timely comply will result in ABANDONMENT of this application.
THIS THREE-MONTH PERIOD IS NOT EXTENDABLE.

5. ☐ CORRECTED DRAWINGS (as "replacement sheets") must be submitted.
   ☐ including changes required by the attached Examiner's Amendment / Comment or in the Office action of Paper No./Mail Date _____.

   Identifying indicia such as the application number (see 37 CFR 1.84(c)) should be written on the drawings in the front (not the back) of each sheet. Replacement sheet(s) should be labeled as such in the header according to 37 CFR 1.121(d).
6. ☐ DEPOSIT OF and/or INFORMATION about the deposit of BIOLOGICAL MATERIAL must be submitted. Note the attached Examiner's comment regarding REQUIREMENT FOR THE DEPOSIT OF BIOLOGICAL MATERIAL.

Attachment(s)

1. ☐ Notice of References Cited (PTO-892)
2. ☐ Information Disclosure Statements (PTO/SB/08), Paper No./Mail Date _____
3. ☐ Examiner's Comment Regarding Requirement for Deposit of Biological Material
4. ☒ Interview Summary (PTO-413), Paper No./Mail Date *attached* .
5. ☒ Examiner's Amendment/Comment
6. ☐ Examiner's Statement of Reasons for Allowance
7. ☐ Other _____.

/HAO D MAI/
Examiner, Art Unit 3732

EXAMINER'S AMENDMENT

1. An examiner's amendment to the record appears below. Should the changes and/or additions be unacceptable to applicant, an amendment may be filed as provided by 37 CFR 1.312. To ensure consideration of such an amendment, it MUST be submitted no later than the payment of the issue fee.

Authorization for this examiner's amendment was given in a telephone interview with Attorney Tam Pham on 10/31/2014.

The application has been amended as follows: the amendment to the claims is attached herein.

2. Any inquiry concerning this communication or earlier communications from the examiner should be directed to HAO D. MAI whose telephone number is (571)270-3002. The examiner can normally be reached on Monday-Friday. If attempts to reach the examiner by telephone are unsuccessful, the examiner's supervisor, Cris Rodriguez can be reached on (571) 272-4964. The fax phone number for the organization where this application or proceeding is assigned is 571-273-8300.

3. Information regarding the status of an application may be obtained from the Patent Application Information Retrieval (PAIR) system. Status information for published applications may be obtained from either Private PAIR or Public PAIR. Status information for unpublished applications is available through Private PAIR only. For more information about the PAIR system, see http://pair-direct.uspto.gov. Should you have questions on access to the Private PAIR system, contact the Electronic Business Center (EBC) at 866-217-9197 (toll-free). If you

would like assistance from a USPTO Customer Service Representative or access to the automated information system, call 800-786-9199 (IN USA OR CANADA) or 571-272-1000.

/Hao D Mai/
Examiner, Art Unit 3732

/Cris L. Rodriguez/
Supervisory Patent Examiner, Art Unit 3732

Examiner-Initiated Interview Summary	Application No.	Applicant(s)	
	14/100,323	NGUYEN ET AL.	
	Examiner	Art Unit	
	HAO D. MAI	3732	

All participants (applicant, applicant's representative, PTO personnel):

(1) *Hao D. Mai*. (3)_____.

(2) *Tam Pham*. (4)_____.

Date of Interview: *31 October 2014*.

Type: ☒ Telephonic ☐ Video Conference
☐ Personal [copy given to: ☐ applicant ☐ applicant's representative]

Exhibit shown or demonstration conducted: ☐ Yes ☒ No.
If Yes, brief description: _____.

Issues Discussed ☐101 ☐112 ☒102 ☒103 ☐Others
(For each of the checked box(es) above, please describe below the issue and detailed description of the discussion)

Claim(s) discussed: *1 and 21-38*.

Identification of prior art discussed: *Hirsch, Black*.

Substance of Interview
(For each issue discussed, provide a detailed description and indicate if agreement was reached. Some topics may include: identification or clarification of a reference or a portion thereof, claim interpretation, proposed amendments, arguments of any applied references etc...)

Proposed examiner's amendment to include the claim language "wave shape" in claim 1 and to correct claim dependency of claims 22-38 were dicussed and authorized by Applicant's counsel.

Applicant recordation instructions: It is not necessary for applicant to provide a separate record of the substance of interview.

Examiner recordation instructions: Examiners must summarize the substance of any interview of record. A complete and proper recordation of the substance of an interview should include the items listed in MPEP 713.04 for complete and proper recordation including the identification of the general thrust of each argument or issue discussed, a general indication of any other pertinent matters discussed regarding patentability and the general results or outcome of the interview, to include an indication as to whether or not agreement was reached on the issues raised.

☐ Attachment

/HAO D MAI/ Examiner, Art Unit 3732	

IN THE CLAIMS

PLEASE AMEND THE CLAIMS AS FOLLOWS:

1. (currently amended) A dental mouthpiece composed of a bendable material, the dental mouthpiece formed in a curve and comprising:

a main body portion at a central part of the curve and comprising a defined pocket having an anterior wall inside the curve, a posterior wall outside the curve, and a side wall in between the anterior wall and the posterior wall, wherein the anterior wall, the posterior wall, and the side wall define an interior portion of the defined pocket, wherein the posterior wall comprises a bridge structure protruding from an interior surface of the posterior wall <u>in a wave shape</u>, the protruding bridge structure comprising a plurality of spaced contact points that keep the anterior wall separated from the posterior wall during suction, wherein the spaced contact points are at crests of the <u>wave shape</u> ~~bridge structure~~, and wherein a plurality of troughs <u>of the wave shape</u> between the spaced contact points allow for suction through the bridge structure;

a cheek retractor portion connected to the main body portion and having a surface that applies pressure when the dental mouthpiece is bent, wherein the pressure is based on resilience of the bendable material; and

a suction connector portion for connecting the interior portion of the main body portion to a vacuum suction source, wherein the suction connector portion is connected to the main body portion on an end opposite the cheek retractor.

2. (original) The mouthpiece of claim 1, wherein the side wall includes a plurality of perforations.

3. (original) The mouthpiece of claim 1, wherein the anterior wall and the posterior wall each includes a plurality of perforations.

4. (original) The mouthpiece of claim 1, wherein the anterior wall further includes a slit along a central axis.

5. (previously presented) The mouthpiece of claim 1, further comprising a stability bar protruding from an interior surface of the posterior wall, wherein a thickness of the stability bar reinforces stability during bending of the dental mouthpiece.

6. (previously presented) The mouthpiece of claim 1, wherein the main body portion, the cheek retractor portion, and the suction connector portion are injection-molded as one piece.

7. (previously presented) The mouthpiece of claim 1, wherein the material is a flexible, translucent, high heat-resistant, autoclavable silicone-based material.

8. – 10. (cancelled)

11. (previously presented) The mouthpiece of claim 1, wherein the suction connector portion comprises an internal stop to assist in positioning of the vacuum suction source or a vacuum adaptor.

12. (original) The mouthpiece of claim 1, further comprising a detachable mouth prop.

13. (original) The mouthpiece of claim 12, wherein the detachable mouth prop comprises a strap configured to fit around the suction connector portion, wherein an external surface of the suction connector portion comprises a notch region corresponding to the strap, and wherein an external surface of the strap is substantially flush with a remaining external surface of the suction connector portion when the strap sits in the notch region.

14. (previously presented) The mouthpiece of claim 13, wherein the strap and other portions of the mouth prop are injection-molded as a single piece.

15. (previously presented) The mouthpiece of claim 12, wherein the suction connector portion further comprises an external plug protrusion corresponding to an opening in the mouth prop.

16. (previously presented) The mouthpiece of claim 15, wherein the plug protrusion fits into the opening to provide additional crush-resistance and decreased compressibility.

17. (original) The mouthpiece of claim 1, wherein the suction connector portion comprises a cutout corresponding to a protrusion on a vacuum adapter for an interlocking fit.

18. (original) The mouthpiece of claim 1, wherein the anterior wall and the posterior wall have different thicknesses.

19. (previously presented) The mouthpiece of claim 1, wherein the main body portion comprises:

a base portion connected to the suction connector portion at a first end,

a cheek retractor connector portion connected to a second end of the base portion, the second end opposite the first end of the base portion, wherein the cheek retractor connector portion is narrower than the base portion, and the cheek retractor connects to main body portion at the cheek retractor connector portion.

20. (previously presented) The mouthpiece of claim 1, wherein one or more of the walls is a protective wall, and wherein debris external to mouthpiece is subject to being caught by suction and/or by the protective wall.

21. (previously presented) A dental mouthpiece composed of a bendable material, the dental mouthpiece formed in a curve and comprising:

a main body portion at a central part of the curve and comprising a defined pocket having an anterior wall inside the curve, a posterior wall outside the curve, and a side wall in between the anterior wall and the posterior wall, wherein the anterior wall, the posterior wall, and the side wall define an interior portion of the defined pocket;

a cheek retractor portion connected to the main body portion and having a surface that applies pressure when the dental mouthpiece is bent, wherein the pressure is based on resilience of the bendable material;

a suction connector portion for connecting the interior portion of the main body portion to a vacuum suction source, wherein the suction connector portion is connected to the main body portion on an end opposite the cheek retractor; and

a detachable mouth prop comprising a strap configured to fit around the suction connector portion, wherein an external surface of the suction connector portion comprises a notch region corresponding to the strap, and wherein an external surface of the strap is substantially flush with a remaining external surface of the suction connector portion when the strap sits in the notch region.

22. (currently amended) The mouthpiece of claim [22] 21, wherein the side wall includes a plurality of perforations.

23. (currently amended) The mouthpiece of claim [22] 21, wherein the anterior wall and the posterior wall each includes a plurality of perforations.

24. (currently amended) The mouthpiece of claim [22] 21, wherein the anterior wall further includes a slit along a central axis.

25. (currently amended) The mouthpiece of claim [22] 21, further comprising a stability bar protruding from an interior surface of the posterior wall, wherein a thickness of the stability bar reinforces stability during bending of the dental mouthpiece.

26. (currently amended) The mouthpiece of claim [22] 21, wherein the main body portion, the cheek retractor portion, and the suction connector portion are injection-molded as one piece.

27. (currently amended) The mouthpiece of claim [22] 21, wherein the material is an autoclavable silicone-based material.

28. (currently amended) The mouthpiece of claim [22] 21, further comprising a bridge structure protruding from an interior surface of the posterior wall, the protruding bridge structure comprising a plurality of spaced contact points that keep the anterior wall separated from the posterior wall during suction.

29. (previously presented) The mouthpiece of claim 28, wherein the bridge structure protrudes from the interior surface of the posterior wall in a wave shape, and wherein the contact points are at crests of the wave shape.

30. (previously presented) The mouthpiece of claim 29, wherein troughs of the wave shape allow suction through the bridge structure.

31. (currently amended) The mouthpiece of claim [22] 21, wherein the suction connector portion comprises an internal stop to assist in positioning of the vacuum suction source or a vacuum adaptor.

32. (currently amended) The mouthpiece of claim [22] 21, wherein the strap and other portions of the mouth prop are injection-molded as a single piece.

33. (currently amended) The mouthpiece of claim [22] 21, wherein the suction connector portion further comprises an external plug protrusion corresponding to an opening in the mouth prop.

34. (previously presented) The mouthpiece of claim 33, wherein the plug protrusion fits into the opening to provide additional crush-resistance and decreased compressibility.

35. (currently amended) The mouthpiece of claim [22] 21, wherein the suction connector portion comprises a cutout corresponding to a protrusion on a vacuum adapter for an interlocking fit.

36. (currently amended) The mouthpiece of claim [22] 21, wherein the anterior wall and the posterior wall have different thicknesses.

37. (currently amended) The mouthpiece of claim [22] 21, wherein the main body portion comprises:

a base portion connected to the suction connector portion at a first end,

a cheek retractor connector portion connected to a second end of the base portion, the second end opposite the first end of the base portion, wherein the cheek retractor connector portion is narrower than the base portion, and the cheek retractor connects to main body portion at the cheek retractor connector portion.

38. (currently amended) The mouthpiece of claim [22] 21, wherein one or more of the walls is a protective wall, and wherein debris external to mouthpiece is subject to being caught by suction and/or by the protective wall.

EAST Search History

EAST Search History (Prior Art)

Ref #	Hits	Search Query	DBs	Default Operator	Plurals	Time Stamp
S45	5	((14/228046) or (14/228050) or (14/228054) or (14/228057) or (14/228061)).APP.	US-PGPUB; USPAT; USOCR; FPRS; EPO; JPO	OR	OFF	2014/10/20 10:35
S46	5	(("20140212837") or ("20140212838") or ("20140212839") or ("20140212840") or ("20140212841")).PN.	US-PGPUB; USPAT; USOCR; FPRS; EPO; JPO	OR	OFF	2014/10/20 10:37
S47	645	433/91-92.ccls.	US-PGPUB; USPAT; USOCR; FPRS; EPO; JPO	ADJ	ON	2014/11/03 06:02
S48	33	433/91-92.ccls. and (wave or bridge)	US-PGPUB; USPAT; USOCR; FPRS; EPO; JPO	ADJ	ON	2014/11/03 06:02
S49	67	433/91-92.ccls. and (flush$3)	US-PGPUB; USPAT; USOCR; FPRS; EPO; JPO	ADJ	ON	2014/11/03 06:05
S50	9	433/91-92.ccls. and (flush$3 with surface)	US-PGPUB; USPAT; USOCR; FPRS; EPO; JPO	ADJ	ON	2014/11/03 06:06
S51	368	433/140.ccls.	US-PGPUB; USPAT; USOCR; FPRS; EPO; JPO	ADJ	ON	2014/11/03 06:07

EAST Search History (Interference)

Ref #	Hits	Search Query	DBs	Default Operator	Plurals	Time Stamp
S52	5	433/91-93,136,140.ccls.	UPAD	ADJ	ON	2014/11/03 06:11
S53	0	433/91-93,136,140.ccls. and (curv$5 cheek bridge wave).clm.	US-PGPUB; USPAT; UPAD	WITH	ON	2014/11/03 06:18
S54	0	433/91-93,136,140.ccls. and (curv$5 cheek bridge).clm.	US-PGPUB; USPAT; UPAD	WITH	ON	2014/11/03 06:18
S55	19	433/91-93,136,140.ccls. and (curv$5 cheek).clm.	US-PGPUB; USPAT; UPAD	WITH	ON	2014/11/03 06:18
S56	0	(retractor curv$5 cheek bridge wave).clm.	US-PGPUB; USPAT; UPAD	WITH	ON	2014/11/03 06:19
S57	0	433/91-93,136,140.ccls. and (curv$5 mouth notch strap flush$3).clm.	US-PGPUB; USPAT; UPAD	WITH	ON	2014/11/03 06:19
S58	0	433/91-93,136,140.ccls. and (curv$5 mouth flush$3).clm.	US-PGPUB; USPAT; UPAD	WITH	ON	2014/11/03 06:19

S59	0	433/91-93,136,140.ccls. and (curv$5 flush$3).clm.	US-PGPUB; USPAT; UPAD	WITH	ON	2014/11/03 06:19
S60	0	(retractor suction curv$5 mouth notch strap flush$3).clm.	US-PGPUB; USPAT; UPAD	WITH	ON	2014/11/03 06:19
S61	0	(curv$5 mouth notch strap flush$3).clm.	US-PGPUB; USPAT; UPAD	WITH	ON	2014/11/03 06:19
S62	0	(curv$5 mouth retractor flush$3).clm.	US-PGPUB; USPAT; UPAD	WITH	ON	2014/11/03 06:19

11/3/2014 6:39:19 AM
C:\Users\hmai1\Documents\EAST\Workspaces\14100323.wsp

Index of Claims	Application/Control No.	Applicant(s)/Patent Under Reexamination
	14100323	NGUYEN ET AL.
	Examiner	**Art Unit**
	HAO D MAI	3732

✓	Rejected	-	Cancelled	N	Non-Elected	A	Appeal
=	Allowed	÷	Restricted	I	Interference	O	Objected

☐ Claims renumbered in the same order as presented by applicant ☐ CPA ☐ T.D. ☐ R.1.47

CLAIM		DATE								
Final	Original	05/05/2014	10/20/2014	11/03/2014						
1	1	✓	✓	=						
2	2	✓	✓	=						
3	3	✓	✓	=						
4	4	✓	✓	=						
5	5	✓	✓	=						
6	6	✓	✓	=						
7	7	✓	✓	=						
	8	✓	✓	-						
	9	✓	O	-						
	10	✓	O	-						
8	11	✓	✓	=						
9	12	✓	✓	=						
10	13	✓	O	=						
11	14	✓	O	=						
12	15	✓	✓	=						
13	16	✓	✓	=						
14	17	✓	✓	=						
15	18	✓	✓	=						
16	19			=						
17	20			=						
18	21			=						
19	22			=						
20	23			=						
21	24			=						
22	25			=						
23	26			=						
24	27			=						
25	28			=						
26	29			=						
27	30			=						
28	31			=						
29	32			=						
30	33			=						
31	34			=						
32	35			=						
33	36			=						

Index of Claims	Application/Control No.	Applicant(s)/Patent Under Reexamination
	14100323	NGUYEN ET AL.
	Examiner	**Art Unit**
	HAO D MAI	3732

✓	Rejected	-	Cancelled	N	Non-Elected	A	Appeal
=	Allowed	÷	Restricted	I	Interference	O	Objected

☐ Claims renumbered in the same order as presented by applicant ☐ CPA ☐ T.D. ☐ R.1.47

CLAIM		DATE								
Final	Original	05/05/2014	10/20/2014	11/03/2014						
34	37			=						
35	38			=						

Search Notes	Application/Control No.	Applicant(s)/Patent Under Reexamination
	14100323	NGUYEN ET AL.
	Examiner	**Art Unit**
	HAO D MAI	3732

CPC- SEARCHED

Symbol	Date	Examiner

CPC COMBINATION SETS - SEARCHED

Symbol	Date	Examiner

US CLASSIFICATION SEARCHED

Class	Subclass	Date	Examiner
433	91-96, 140	05/05/2014	HDM
433	136	10/20/2014	HDM
	Updated Search	10/20/2014	HDM

SEARCH NOTES

Search Notes	Date	Examiner
Inventor Search	05/05/2014	HDM
Plus Search	05/05/2014	HDM
Update Search	10/20/2014	HDM
Interference Text Search	11/03/2014	HDM

INTERFERENCE SEARCH

US Class/ CPC Symbol	US Subclass / CPC Group	Date	Examiner
433	91-96, 136, 140	11/03/2014	HDM

Issue Classification	Application/Control No.	Applicant(s)/Patent Under Reexamination
	14100323	NGUYEN ET AL.
	Examiner	**Art Unit**
	HAO D MAI	3732

CPC

Symbol					Type	Version
A61C		17	/	04	F	2013-01-01
A61C		17	/	0208	I	2013-01-01
A61C		17	/	043	I	2013-01-01
			/			
			/			
			/			
			/			
			/			
			/			
			/			
			/			
			/			
			/			
			/			
			/			

CPC Combination Sets

Symbol					Type	Set	Ranking	Version
			/					
			/					

/HAO D MAI/ Examiner.Art Unit 3732 (Assistant Examiner)	11/03/2014 (Date)	**Total Claims Allowed:** 35	
/CRIS L RODRIGUEZ/ Supervisory Patent Examiner.Art Unit 3732 (Primary Examiner)	11/03/2014 (Date)	O.G. Print Claim(s) 1	O.G. Print Figure 1A

Issue Classification	Application/Control No.	Applicant(s)/Patent Under Reexamination
	14100323	NGUYEN ET AL.
	Examiner	**Art Unit**
	HAO D MAI	3732

US ORIGINAL CLASSIFICATION		INTERNATIONAL CLASSIFICATION	
CLASS	SUBCLASS	CLAIMED	NON-CLAIMED
433	93	A 6 1 C 17 / 06 (2006.01.01)	

CROSS REFERENCE(S)					
CLASS	SUBCLASS (ONE SUBCLASS PER BLOCK)				
433	136	140			

/HAO D MAI/ Examiner.Art Unit 3732 (Assistant Examiner)	11/03/2014 (Date)	**Total Claims Allowed:** 35	
/CRIS L RODRIGUEZ/ Supervisory Patent Examiner.Art Unit 3732 (Primary Examiner)	11/03/2014 (Date)	O.G. Print Claim(s) 1	O.G. Print Figure 1A

Issue Classification	Application/Control No.	Applicant(s)/Patent Under Reexamination
	14100323	NGUYEN ET AL.
	Examiner	**Art Unit**
	HAO D MAI	3732

☐ Claims renumbered in the same order as presented by applicant ☐ CPA ☐ T.D. ☐ R.1.47

Final	Original	Final	Original	Final	Original	Final	Original	Final	Original	Final	Original	Final	Original	Final	Original
1	1	14	17	30	33										
2	2	15	18	31	34										
3	3	16	19	32	35										
4	4	17	20	33	36										
5	5	18	21	34	37										
6	6	19	22	35	38										
7	7	20	23												
	8	21	24												
	9	22	25												
	10	23	26												
8	11	14	27												
9	12	25	28												
10	13	26	29												
11	14	27	30												
12	15	28	31												
13	16	29	32												

/HAO D MAI/ Examiner.Art Unit 3732 (Assistant Examiner)	11/03/2014 (Date)	**Total Claims Allowed:** 35	
/CRIS L RODRIGUEZ/ Supervisory Patent Examiner.Art Unit 3732 (Primary Examiner)	11/03/2014 (Date)	O.G. Print Claim(s) 1	O.G. Print Figure 1A

OK TO ENTER: /H.D.M./ 10/28/2014

IN THE UNITED STATES PATENT AND TRADEMARK OFFICE

APPLICANT(S):	Thien Nguyen et al.
APPLICATION NO.:	14/100,323
FILING DATE:	December 9, 2013
TITLE:	Intraoral Dental Suction and Isolation System
ART UNIT:	3732
EXAMINER:	Hao D. Mai
CONFIRM. NO.:	5734
ATTY.DKT.NO.:	INCEP-001

MAIL STOP AF
COMMISSIONER FOR PATENTS
P.O. BOX 1450
ALEXANDRIA, VA 22313-1450

AMENDMENT B

Examiner Mai:

In response to the office action dated October 24, 2014 (*Office Action*), please enter the following **amendments** to the **claims**, which commence on **page two**. The Applicants' **remarks** and **conclusion** appear beginning on **pages eight** and **nine**, respectively.

PART B - FEE(S) TRANSMITTAL

Complete and send this form, together with applicable fee(s), to: Mail **Mail Stop ISSUE FEE**
Commissioner for Patents
P.O. Box 1450
Alexandria, Virginia 22313-1450
or Fax (571) 273-2885

INSTRUCTIONS: This form should be used for transmitting the ISSUE FEE and PUBLICATION FEE (if required). Blocks 1 through 5 should be completed where appropriate. All further correspondence including the Patent, advance orders and notification of maintenance fees will be mailed to the current correspondence address as indicated unless corrected below or directed otherwise in Block 1, by (a) specifying a new correspondence address; and/or (b) indicating a separate "FEE ADDRESS" for maintenance fee notifications.

CURRENT CORRESPONDENCE ADDRESS (Note: Use Block 1 for any change of address)

28661 7590
LEWIS ROCA ROTHGERBER LLP
4300 Bohannon Drive, Suite 230
Menlo Park, CA 94025

Note: A certificate of mailing can only be used for domestic mailings of the Fee(s) Transmittal. This certificate cannot be used for any other accompanying papers. Each additional paper, such as an assignment or formal drawing, must have its own certificate of mailing or transmission.

Certificate of Mailing or Transmission

I hereby certify that this Fee(s) Transmittal is being deposited with the United States Postal Service with sufficient postage for first class mail in an envelope addressed to the Mail Stop ISSUE FEE address above, or being facsimile transmitted to the USPTO (571) 273-2885, on the date indicated below.

(Depositor's name)
(Signature)
(Date)

APPLICATION NO.	FILING DATE	FIRST NAMED INVENTOR	ATTORNEY DOCKET NO.	CONFIRMATION NO.
14/100,323	12/09/2013	Thien Nguyen	INCEP-001	5734

TITLE OF INVENTION:

INTRAORAL DENTAL SUCTION AND ISOLATION SYSTEM

APPLN. TYPE	SMALL ENTITY	ISSUE FEE	PUBLICATION FEE	TOTAL FEE(S) DUE	DATE DUE
nonprovisional	YES	$480	$0	$480	02/09/2015

EXAMINER	ART UNIT	CLASS-SUBCLASS

1. Change of correspondence address or indication of "Fee Address" (37 CFR 1.363).

☐ Change of correspondence address (or Change of Correspondence Address form PTO/SB/122) attached.

☐ "Fee Address" indication (or "Fee Address" Indication form PTO/SB/47; Rev 03-02 or more recent) attached. **Use of a Customer Number is required.**

2. For printing on the patent front page, list

(1) the names of up to 3 registered patent attorneys or agents OR, alternatively,

(2) the name of a single firm (having as a member a registered attorney or agent) and the names of up to 2 registered patent attorneys or agents. If no name is listed, no name will be printed.

1 Lewis Roca Rothgerber LLP
2
3

3. ASSIGNEE NAME AND RESIDENCE DATA TO BE PRINTED ON THE PATENT (print or type)

PLEASE NOTE: Unless an assignee is identified below, no assignee data will appear on the patent. If an assignee is identified below, the document has been filed for recordation as set forth in 37 CFR 3.11. Completion of this form is NOT a substitute for filing an assignment.

(A) NAME OF ASSIGNEE: Incept, Inc.

(B) RESIDENCE: (CITY and STATE OR COUNTRY): Irvine, California

Please check the appropriate assignee category or categories (will not be printed on the patent) : ☐ Individual ☑ Corporation or other private group entity ☐ Government

4a. The following fee(s) are enclosed:

☑ Issue Fee
☐ Publication Fee (No small entity discount permitted)
☐ Advance Order - # of Copies

4b. Payment of Fee(s):

☐ A check in the amount of the fee(s) is enclosed.
☐ Payment by credit card. Form PTO-2038 is attached.
☑ The Director is hereby authorized by charge the required fee(s), or credit any overpayment, to Deposit Account Number 50-0612.

5. **Change in Entity Status** (from status indicated above)

☐ a. Applicant claims SMALL ENTITY status. See 37 CFR 1.27.
☐ b. Applicant is no longer claiming SMALL ENTITY status. See 37 CFR 1.27(g)(2).

The Director of the USPTO is requested to apply the Issue Fee and Publication Fee (if any) or to re-apply any previously paid issue fee to the application identified above.
NOTE: The Issue Fee and Publication Fee (if required) will not be accepted from anyone other than the applicant; a registered attorney or agent; or the assignee or other party in interest as shown by the records of the United States Patent and Trademark Office.

Authorized Signature /Tam Thanh Pham/ Date November 11, 2014

Typed or printed name Tam Thanh Pham Registration No. 50565

This collection of information is required by 37 CFR 1.311. The information is required to obtain or retain a benefit by the public which is to file (and by the USPTO to process) an application. Confidentiality is governed by 35 U.S.C. 122 and 37 CFR 1.14. This collection is estimated to take 12 minutes to complete, including gathering, preparing, and submitting the completed application form to the USPTO. Time will vary depending upon the individual case. Any comments on the amount of time you require to complete this form and/or suggestions for reducing this burden, should be sent to the Chief Information Officer, U.S. Patent and Trademark Office, U.S. Department of Commerce, P.O. Box 1450, Alexandria, Virginia 22313-1450. DO NOT SEND FEES OR COMPLETED FORMS TO THIS ADDRESS. SEND TO: Commissioner for Patents, P.O. Box 1450, Alexandria, Virginia 22313-1450.

Under the Paperwork Reduction Act of 1995, no persons are required to respond to a collection of information unless it displays a valid OMB control number.

Privacy Act Statement

The Privacy Act of 1974 (P.L. 93-579) requires that you be given certain information in connection with your submission of the attached form related to a patent application or patent. Accordingly, pursuant to the requirements of the Act, please be advised that: (1) the general authority for the collection of this information is 35 U.S.C. 2(b)(2); (2) furnishing of the information solicited is voluntary; and (3) the principal purpose for which the information is used by the U.S. Patent and Trademark Office is to process and/or examine your submission related to a patent application or patent. If you do not furnish the requested information, the U.S. Patent and Trademark Office may not be able to process and/or examine your submission, which may result in termination of proceedings or abandonment of the application or expiration of the patent.

The information provided by you in this form will be subject to the following routine uses:

1. The information on this form will be treated confidentially to the extent allowed under the Freedom of Information Act (5 U.S.C. 552) and the Privacy Act (5 U.S.C 552a). Records from this system of records may be disclosed to the Department of Justice to determine whether disclosure of these records is required by the Freedom of Information Act.
2. A record from this system of records may be disclosed, as a routine use, in the course of presenting evidence to a court, magistrate, or administrative tribunal, including disclosures to opposing counsel in the course of settlement negotiations.
3. A record in this system of records may be disclosed, as a routine use, to a Member of Congress submitting a request involving an individual, to whom the record pertains, when the individual has requested assistance from the Member with respect to the subject matter of the record.
4. A record in this system of records may be disclosed, as a routine use, to a contractor of the Agency having need for the information in order to perform a contract. Recipients of information shall be required to comply with the requirements of the Privacy Act of 1974, as amended, pursuant to 5 U.S.C. 552a(m).
5. A record related to an International Application filed under the Patent Cooperation Treaty in this system of records may be disclosed, as a routine use, to the International Bureau of the World Intellectual Property Organization, pursuant to the Patent Cooperation Treaty.
6. A record in this system of records may be disclosed, as a routine use, to another federal agency for purposes of National Security review (35 U.S.C. 181) and for review pursuant to the Atomic Energy Act (42 U.S.C. 218(c)).
7. A record from this system of records may be disclosed, as a routine use, to the Administrator, General Services, or his/her designee, during an inspection of records conducted by GSA as part of that agency's responsibility to recommend improvements in records management practices and programs, under authority of 44 U.S.C. 2904 and 2906. Such disclosure shall be made in accordance with the GSA regulations governing inspection of records for this purpose, and any other relevant (i.e., GSA or Commerce) directive. Such disclosure shall not be used to make determinations about individuals.
8. A record from this system of records may be disclosed, as a routine use, to the public after either publication of the application pursuant to 35 U.S.C. 122(b) or issuance of a patent pursuant to 35 U.S.C. 151. Further, a record may be disclosed, subject to the limitations of 37 CFR 1.14, as a routine use, to the public if the record was filed in an application which became abandoned or in which the proceedings were terminated and which application is referenced by either a published application, an application open to public inspection or an issued patent.
9. A record from this system of records may be disclosed, as a routine use, to a Federal, State, or local law enforcement agency, if the USPTO becomes aware of a violation or potential violation of law or regulation.

Electronic Patent Application Fee Transmittal

Application Number:	14100323
Filing Date:	09-Dec-2013
Title of Invention:	INTRAORAL DENTAL SUCTION AND ISOLATION SYSTEM
First Named Inventor/Applicant Name:	Thien Nguyen
Filer:	TamThanh Thi Pham/Nicole Villanueva
Attorney Docket Number:	INCEP-001

Filed as Small Entity

Utility under 35 USC 111(a) Filing Fees

Description	Fee Code	Quantity	Amount	Sub-Total in USD($)
Basic Filing:				
Pages:				
Claims:				
Miscellaneous-Filing:				
Petition:				
Patent-Appeals-and-Interference:				
Post-Allowance-and-Post-Issuance:				
Utility Appl Issue Fee	2501	1	480	480
Extension-of-Time:				

Description	Fee Code	Quantity	Amount	Sub-Total in USD($)
Miscellaneous:				
			Total in USD ($)	**480**

Electronic Acknowledgement Receipt

EFS ID:	20668033
Application Number:	14100323
International Application Number:	
Confirmation Number:	5734
Title of Invention:	INTRAORAL DENTAL SUCTION AND ISOLATION SYSTEM
First Named Inventor/Applicant Name:	Thien Nguyen
Customer Number:	28661
Filer:	TamThanh Thi Pham/Nicole Villanueva
Filer Authorized By:	TamThanh Thi Pham
Attorney Docket Number:	INCEP-001
Receipt Date:	11-NOV-2014
Filing Date:	09-DEC-2013
Time Stamp:	19:53:43
Application Type:	Utility under 35 USC 111(a)

Payment information:

Submitted with Payment	yes
Payment Type	Deposit Account
Payment was successfully received in RAM	$480
RAM confirmation Number	14471
Deposit Account	500612
Authorized User	

The Director of the USPTO is hereby authorized to charge indicated fees and credit any overpayment as follows:

Charge any Additional Fees required under 37 C.F.R. Section 1.16 (National application filing, search, and examination fees)

Charge any Additional Fees required under 37 C.F.R. Section 1.17 (Patent application and reexamination processing fees)

Charge any Additional Fees required under 37 C.F.R. Section 1.19 (Document supply fees)

Charge any Additional Fees required under 37 C.F.R. Section 1.20 (Post Issuance fees)

Charge any Additional Fees required under 37 C.F.R. Section 1.21 (Miscellaneous fees and charges)

File Listing:

Document Number	Document Description	File Name	File Size(Bytes)/ Message Digest	Multi Part /.zip	Pages (if appl.)
1	Issue Fee Payment (PTO-85B)	INCEP-001_Issue_Fee_11-11-14.pdf	136844 1f7c272faaf8eaab86dee887c315d089bde6e31e	no	2
Warnings:					
Information:					
2	Fee Worksheet (SB06)	fee-info.pdf	30046 68cd3fc41262b0efb3e3e4367db2ddd1db848df0	no	2
Warnings:					
Information:					
		Total Files Size (in bytes):	166890		

This Acknowledgement Receipt evidences receipt on the noted date by the USPTO of the indicated documents, characterized by the applicant, and including page counts, where applicable. It serves as evidence of receipt similar to a Post Card, as described in MPEP 503.

New Applications Under 35 U.S.C. 111
If a new application is being filed and the application includes the necessary components for a filing date (see 37 CFR 1.53(b)-(d) and MPEP 506), a Filing Receipt (37 CFR 1.54) will be issued in due course and the date shown on this Acknowledgement Receipt will establish the filing date of the application.

National Stage of an International Application under 35 U.S.C. 371
If a timely submission to enter the national stage of an international application is compliant with the conditions of 35 U.S.C. 371 and other applicable requirements a Form PCT/DO/EO/903 indicating acceptance of the application as a national stage submission under 35 U.S.C. 371 will be issued in addition to the Filing Receipt, in due course.

New International Application Filed with the USPTO as a Receiving Office
If a new international application is being filed and the international application includes the necessary components for an international filing date (see PCT Article 11 and MPEP 1810), a Notification of the International Application Number and of the International Filing Date (Form PCT/RO/105) will be issued in due course, subject to prescriptions concerning national security, and the date shown on this Acknowledgement Receipt will establish the international filing date of the application.

UNITED STATES PATENT AND TRADEMARK OFFICE

UNITED STATES DEPARTMENT OF COMMERCE
United States Patent and Trademark Office
Address: COMMISSIONER FOR PATENTS
P.O. Box 1450
Alexandria, Virginia 22313-1450
www.uspto.gov

APPLICATION NO.	ISSUE DATE	PATENT NO.	ATTORNEY DOCKET NO.	CONFIRMATION NO.
14/100,323	12/16/2014	8911232	INCEP-001	5734

28661 7590 11/25/2014
Lewis Roca Rothgerber LLP
4300 Bohannon Drive
Suite 230
Menlo Park, CA 94025

ISSUE NOTIFICATION

The projected patent number and issue date are specified above.

Determination of Patent Term Adjustment under 35 U.S.C. 154 (b)
(application filed on or after May 29, 2000)

The Patent Term Adjustment is 0 day(s). Any patent to issue from the above-identified application will include an indication of the adjustment on the front page.

If a Continued Prosecution Application (CPA) was filed in the above-identified application, the filing date that determines Patent Term Adjustment is the filing date of the most recent CPA.

Applicant will be able to obtain more detailed information by accessing the Patent Application Information Retrieval (PAIR) WEB site (http://pair.uspto.gov).

Any questions regarding the Patent Term Extension or Adjustment determination should be directed to the Office of Patent Legal Administration at (571)-272-7702. Questions relating to issue and publication fee payments should be directed to the Application Assistance Unit (AAU) of the Office of Data Management (ODM) at (571)-272-4200.

APPLICANT(s) (Please see PAIR WEB site http://pair.uspto.gov for additional applicants):

Incept Incorporated, Santa Ana, CA, Assignee (with 37 CFR 1.172 Interest);
Thien Nguyen, Santa Ana, CA;
Tam Thanh Pham, San Francisco, CA;

The United States represents the largest, most dynamic marketplace in the world and is an unparalleled location for business investment, innovation, and commercialization of new technologies. The USA offers tremendous resources and advantages for those who invest and manufacture goods here. Through SelectUSA, our nation works to encourage and facilitate business investment. To learn more about why the USA is the best country in the world to develop technology, manufacture products, and grow your business, visit SelectUSA.gov.

PTO/AIA/80 (07-12)
Approved for use through 11/30/2014. OMB 0651-0035
U.S. Patent and Trademark Office; U.S DEPARTMENT OF COMMERCE
Under the Paperwork Reduction Act of 1995, no persons are required to respond to a collection of information unless it displays a valid OMB control number.

POWER OF ATTORNEY TO PROSECUTE APPLICATIONS BEFORE THE USPTO

I hereby revoke all previous powers of attorney given in the application identified in the attached statement under 37 CFR 3.73(c).

I hereby appoint:

[■] Practitioners associated with Customer Number: 138718

OR

[ ] Practitioner(s) named below (if more than ten patent practitioners are to be named, then a customer number must be used):

Name	Registration Number	Name	Registration Number

As attorney(s) or agent(s) to represent the undersigned before the United States Patent and Trademark Office (USPTO) in connection with any and all patent applications assigned only to the undersigned according to the USPTO assignment records or assignments documents attached to this form in accordance with 37 CFR 3.73(c).

Please change the correspondence address for the application identified in the attached statement under 37 CFR 3.73(c) to:

[■] The address associated with Customer Number: 138718

OR

Firm or Individual Name			
Address			
City		State	Zip
Country			
Telephone		Email	

Assignee Name and Address: Incept, Inc.
92 Corporate Park, Suite C #818
Irvine, CA 92606

A copy of this form, together with a statement under 37 CFR 3.73(c) (Form PTO/AIA/96 or equivalent) is required to be Filed in each application in which this form is used. The statement under 37 CFR 3.73(c) may be completed by one of The practitioners appointed in this form, and must identify the application in which this Power of Attorney is to be filed.

SIGNATURE of Assignee of Record

The individual whose signature and title is supplied below is authorized to act on behalf of the assignee

Signature		Date	2/11/2016
Name	Thien Nguyen	Telephone	949-825-5989
Title	CEO		

This collection of information is required by 37 CFR 1.31, 1.32 and 1.33. The information is required to obtain or retain a benefit by the public which is to file (and by the USPTO to process) an application. Confidentiality is governed by 35 U.S.C. 122 and 37 CFR 1.11 and 1.14. This collection is estimated to take 3 minutes to complete, including gathering, preparing, and submitting the completed application form to the USPTO. Time will vary depending upon the individual case. Any comments on the amount of time you require to complete this form and/or suggestions for reducing this burden, should be sent to the Chief Information Officer, U.S. Patent and Trademark Office, U.S. Department of Commerce, P.O. Box 1450, Alexandria, VA 22313-1450. DO NOT SEND FEES OR COMPLETED FORMS TO THIS ADDRESS. **SEND TO: Commissioner for Patents, P.O. Box 1450, Alexandria, VA 22313-1450.**

If you need assistance in completing the form, call 1-800-PTO-9199 and select option 2.

Privacy Act Statement

The **Privacy Act of 1974 (P.L. 93-579)** requires that you be given certain information in connection with your submission of the attached form related to a patent application or patent. Accordingly, pursuant to the requirements of the Act, please be advised that: (1) the general authority for the collection of this information is 35 U.S.C. 2(b)(2); (2) furnishing of the information solicited is voluntary; and (3) the principal purpose for which the information is used by the U.S. Patent and Trademark Office is to process and/or examine your submission related to a patent application or patent. If you do not furnish the requested information, the U.S. Patent and Trademark Office may not be able to process and/or examine your submission, which may result in termination of proceedings or abandonment of the application or expiration of the patent.

The information provided by you in this form will be subject to the following routine uses:

1. The information on this form will be treated confidentially to the extent allowed under the Freedom of Information Act (5 U.S.C. 552) and the Privacy Act (5 U.S.C 552a). Records from this system of records may be disclosed to the Department of Justice to determine whether disclosure of these records is required by the Freedom of Information Act.
2. A record from this system of records may be disclosed, as a routine use, in the course of presenting evidence to a court, magistrate, or administrative tribunal, including disclosures to opposing counsel in the course of settlement negotiations.
3. A record in this system of records may be disclosed, as a routine use, to a Member of Congress submitting a request involving an individual, to whom the record pertains, when the individual has requested assistance from the Member with respect to the subject matter of the record.
4. A record in this system of records may be disclosed, as a routine use, to a contractor of the Agency having need for the information in order to perform a contract. Recipients of information shall be required to comply with the requirements of the Privacy Act of 1974, as amended, pursuant to 5 U.S.C. 552a(m).
5. A record related to an International Application filed under the Patent Cooperation Treaty in this system of records may be disclosed, as a routine use, to the International Bureau of the World Intellectual Property Organization, pursuant to the Patent Cooperation Treaty.
6. A record in this system of records may be disclosed, as a routine use, to another federal agency for purposes of National Security review (35 U.S.C. 181) and for review pursuant to the Atomic Energy Act (42 U.S.C. 218(c)).
7. A record from this system of records may be disclosed, as a routine use, to the Administrator, General Services, or his/her designee, during an inspection of records conducted by GSA as part of that agency's responsibility to recommend improvements in records management practices and programs, under authority of 44 U.S.C. 2904 and 2906. Such disclosure shall be made in accordance with the GSA regulations governing inspection of records for this purpose, and any other relevant (*i.e.*, GSA or Commerce) directive. Such disclosure shall not be used to make determinations about individuals.
8. A record from this system of records may be disclosed, as a routine use, to the public after either publication of the application pursuant to 35 U.S.C. 122(b) or issuance of a patent pursuant to 35 U.S.C. 151. Further, a record may be disclosed, subject to the limitations of 37 CFR 1.14, as a routine use, to the public if the record was filed in an application which became abandoned or in which the proceedings were terminated and which application is referenced by either a published application, an application open to public inspection or an issued patent.
9. A record from this system of records may be disclosed, as a routine use, to a Federal, State, or local law enforcement agency, if the USPTO becomes aware of a violation or potential violation of law or regulation.

PTO/AIA/96 (08-12)
Approved for use through 01/31/2013. OMB 0651-0031
U.S. Patent and Trademark Office; U.S. DEPARTMENT OF COMMERCE
Under the Paperwork Reduction Act of 1995, no persons are required to respond to a collection of information unless it displays a valid OMB control number.

STATEMENT UNDER 37 CFR 3.73(c)

Applicant/Patent Owner: Incept, Inc.

Application No./Patent No.: 8,911,232 Filed/Issue Date: December 16, 2014

Titled: Intraoral Dental Suction and Isolation System

_____, a _____

(Name of Assignee) (Type of Assignee, e.g., corporation, partnership, university, government agency, etc.)

states that, for the patent application/patent identified above, it is (choose **one** of options 1, 2, 3 or 4 below):

1. ☑ The assignee of the entire right, title, and interest.

2. ☐ An assignee of less than the entire right, title, and interest (check applicable box):

   ☐ The extent (by percentage) of its ownership interest is _____%. Additional Statement(s) by the owners holding the balance of the interest must be submitted to account for 100% of the ownership interest.

   ☐ There are unspecified percentages of ownership. The other parties, including inventors, who together own the entire right, title and interest are:

   Additional Statement(s) by the owner(s) holding the balance of the interest must be submitted to account for the entire right, title, and interest.

3. ☐ The assignee of an undivided interest in the entirety (a complete assignment from one of the joint inventors was made). The other parties, including inventors, who together own the entire right, title, and interest are:

   Additional Statement(s) by the owner(s) holding the balance of the interest must be submitted to account for the entire right, title, and interest.

4. ☐ The recipient, via a court proceeding or the like (*e.g.*, bankruptcy, probate), of an undivided interest in the entirety (a complete transfer of ownership interest was made). The certified document(s) showing the transfer is attached.

The interest identified in option 1, 2 or 3 above (not option 4) is evidenced by either (choose **one** of options A or B below):

A. ☑ An assignment from the inventor(s) of the patent application/patent identified above. The assignment was recorded in the United States Patent and Trademark Office at Reel 031909, Frame 0322, or for which a copy thereof is attached.

B. ☐ A chain of title from the inventor(s), of the patent application/patent identified above, to the current assignee as follows:

   1. From: _____ To: _____

      The document was recorded in the United States Patent and Trademark Office at

      Reel _____, Frame _____, or for which a copy thereof is attached.

   2. From: _____ To: _____

      The document was recorded in the United States Patent and Trademark Office at

      Reel _____, Frame _____, or for which a copy thereof is attached.

This collection of information is required by 37 CFR 3.73(b). The information is required to obtain or retain a benefit by the public which is to file (and by the USPTO to process) an application. Confidentiality is governed by 35 U.S.C. 122 and 37 CFR 1.11 and 1.14. This collection is estimated to take 12 minutes to complete, including gathering, preparing, and submitting the completed application form to the USPTO. Time will vary depending upon the individual case. Any comments on the amount of time you require to complete this form and/or suggestions for reducing this burden, should be sent to the Chief Information Officer, U.S. Patent and Trademark Office, U.S. Department of Commerce, P.O. Box 1450, Alexandria, VA 22313-1450. DO NOT SEND FEES OR COMPLETED FORMS TO THIS ADDRESS. **SEND TO: Commissioner for Patents, P.O. Box 1450, Alexandria, VA 22313-1450.**

If you need assistance in completing the form, call 1-800-PTO-9199 and select option 2.

Under the Paperwork Reduction Act of 1995, no persons are required to respond to a collection of information unless it displays a valid OMB control number.

STATEMENT UNDER 37 CFR 3.73(c)

3. From: _____ To: _____

The document was recorded in the United States Patent and Trademark Office at

Reel _____, Frame _____, or for which a copy thereof is attached.

4. From: _____ To: _____

The document was recorded in the United States Patent and Trademark Office at

Reel _____, Frame _____, or for which a copy thereof is attached.

5. From: _____ To: _____

The document was recorded in the United States Patent and Trademark Office at

Reel _____, Frame _____, or for which a copy thereof is attached.

6. From: _____ To: _____

The document was recorded in the United States Patent and Trademark Office at

Reel _____, Frame _____, or for which a copy thereof is attached.

☐ Additional documents in the chain of title are listed on a supplemental sheet(s).

☐ As required by 37 CFR 3.73(c)(1)(i), the documentary evidence of the chain of title from the original owner to the assignee was, or concurrently is being, submitted for recordation pursuant to 37 CFR 3.11.

[NOTE: A separate copy (i.e., a true copy of the original assignment document(s)) must be submitted to Assignment Division in accordance with 37 CFR Part 3, to record the assignment in the records of the USPTO. See MPEP 302.08]

The undersigned (whose title is supplied below) is authorized to act on behalf of the assignee.

/Tam Thanh Pham/	February 11, 2016
Signature	Date
Tam Thanh Pham	50,565
Printed or Typed Name	Title or Registration Number

Privacy Act Statement

The **Privacy Act of 1974 (P.L. 93-579)** requires that you be given certain information in connection with your submission of the attached form related to a patent application or patent. Accordingly, pursuant to the requirements of the Act, please be advised that: (1) the general authority for the collection of this information is 35 U.S.C. 2(b)(2); (2) furnishing of the information solicited is voluntary; and (3) the principal purpose for which the information is used by the U.S. Patent and Trademark Office is to process and/or examine your submission related to a patent application or patent. If you do not furnish the requested information, the U.S. Patent and Trademark Office may not be able to process and/or examine your submission, which may result in termination of proceedings or abandonment of the application or expiration of the patent.

The information provided by you in this form will be subject to the following routine uses:

1. The information on this form will be treated confidentially to the extent allowed under the Freedom of Information Act (5 U.S.C. 552) and the Privacy Act (5 U.S.C 552a). Records from this system of records may be disclosed to the Department of Justice to determine whether disclosure of these records is required by the Freedom of Information Act.
2. A record from this system of records may be disclosed, as a routine use, in the course of presenting evidence to a court, magistrate, or administrative tribunal, including disclosures to opposing counsel in the course of settlement negotiations.
3. A record in this system of records may be disclosed, as a routine use, to a Member of Congress submitting a request involving an individual, to whom the record pertains, when the individual has requested assistance from the Member with respect to the subject matter of the record.
4. A record in this system of records may be disclosed, as a routine use, to a contractor of the Agency having need for the information in order to perform a contract. Recipients of information shall be required to comply with the requirements of the Privacy Act of 1974, as amended, pursuant to 5 U.S.C. 552a(m).
5. A record related to an International Application filed under the Patent Cooperation Treaty in this system of records may be disclosed, as a routine use, to the International Bureau of the World Intellectual Property Organization, pursuant to the Patent Cooperation Treaty.
6. A record in this system of records may be disclosed, as a routine use, to another federal agency for purposes of National Security review (35 U.S.C. 181) and for review pursuant to the Atomic Energy Act (42 U.S.C. 218(c)).
7. A record from this system of records may be disclosed, as a routine use, to the Administrator, General Services, or his/her designee, during an inspection of records conducted by GSA as part of that agency's responsibility to recommend improvements in records management practices and programs, under authority of 44 U.S.C. 2904 and 2906. Such disclosure shall be made in accordance with the GSA regulations governing inspection of records for this purpose, and any other relevant (*i.e.*, GSA or Commerce) directive. Such disclosure shall not be used to make determinations about individuals.
8. A record from this system of records may be disclosed, as a routine use, to the public after either publication of the application pursuant to 35 U.S.C. 122(b) or issuance of a patent pursuant to 35 U.S.C. 151. Further, a record may be disclosed, subject to the limitations of 37 CFR 1.14, as a routine use, to the public if the record was filed in an application which became abandoned or in which the proceedings were terminated and which application is referenced by either a published application, an application open to public inspection or an issued patent.
9. A record from this system of records may be disclosed, as a routine use, to a Federal, State, or local law enforcement agency, if the USPTO becomes aware of a violation or potential violation of law or regulation.

Electronic Acknowledgement Receipt

EFS ID:	24894819
Application Number:	14100323
International Application Number:	
Confirmation Number:	5734
Title of Invention:	INTRAORAL DENTAL SUCTION AND ISOLATION SYSTEM
First Named Inventor/Applicant Name:	Thien Nguyen
Customer Number:	28661
Filer:	TamThanh Thi Pham
Filer Authorized By:	
Attorney Docket Number:	INCEP-001
Receipt Date:	11-FEB-2016
Filing Date:	09-DEC-2013
Time Stamp:	17:49:14
Application Type:	Utility under 35 USC 111(a)

Payment information:

Submitted with Payment	no

File Listing:

Document Number	Document Description	File Name	File Size(Bytes)/ Message Digest	Multi Part /.zip	Pages (if appl.)
1	Power of Attorney	INCEPT_POA.pdf	89110 2fe57627077dc0e78ae26d7b46cb17a358db6dab	no	2

Warnings:

Information:

2	Assignee showing of ownership per 37 CFR 3.73	INCEP-001_373C.pdf	740873 0a1fa3d3efae85107d71a1b7490a863ae3829d3e	no	3

Warnings:

Information:

Total Files Size (in bytes):	829983

This Acknowledgement Receipt evidences receipt on the noted date by the USPTO of the indicated documents, characterized by the applicant, and including page counts, where applicable. It serves as evidence of receipt similar to a Post Card, as described in MPEP 503.

<u>New Applications Under 35 U.S.C. 111</u>
If a new application is being filed and the application includes the necessary components for a filing date (see 37 CFR 1.53(b)-(d) and MPEP 506), a Filing Receipt (37 CFR 1.54) will be issued in due course and the date shown on this Acknowledgement Receipt will establish the filing date of the application.

<u>National Stage of an International Application under 35 U.S.C. 371</u>
If a timely submission to enter the national stage of an international application is compliant with the conditions of 35 U.S.C. 371 and other applicable requirements a Form PCT/DO/EO/903 indicating acceptance of the application as a national stage submission under 35 U.S.C. 371 will be issued in addition to the Filing Receipt, in due course.

<u>New International Application Filed with the USPTO as a Receiving Office</u>
If a new international application is being filed and the international application includes the necessary components for an international filing date (see PCT Article 11 and MPEP 1810), a Notification of the International Application Number and of the International Filing Date (Form PCT/RO/105) will be issued in due course, subject to prescriptions concerning national security, and the date shown on this Acknowledgement Receipt will establish the international filing date of the application.

UNITED STATES PATENT AND TRADEMARK OFFICE

UNITED STATES DEPARTMENT OF COMMERCE
United States Patent and Trademark Office
Address: COMMISSIONER FOR PATENTS
P.O. Box 1450
Alexandria, Virginia 22313-1450
www.uspto.gov

APPLICATION NUMBER	FILING OR 371(C) DATE	FIRST NAMED APPLICANT	ATTY. DOCKET NO./TITLE
14/100,323	12/09/2013	Thien Nguyen	INCEP-001

CONFIRMATION NO. 5734

POWER OF ATTORNEY NOTICE

28661
Lewis Roca Rothgerber Christie LLP
4300 Bohannon Drive
Suite 230
Menlo Park, CA 94025

OC000000080888719

Date Mailed: 02/25/2016

NOTICE REGARDING CHANGE OF POWER OF ATTORNEY

This is in response to the Power of Attorney filed 02/11/2016.

- The Power of Attorney to you in this application has been revoked by the assignee who has intervened as provided by 37 CFR 3.71. Future correspondence will be mailed to the new address of record(37 CFR 1.33).

Questions about the contents of this notice and the requirements it sets forth should be directed to the Office of Data Management, Application Assistance Unit, at **(571) 272-4000** or **(571) 272-4200** or **1-888-786-0101**.

/zabraha/

UNITED STATES PATENT AND TRADEMARK OFFICE

UNITED STATES DEPARTMENT OF COMMERCE
United States Patent and Trademark Office
Address: COMMISSIONER FOR PATENTS
P.O. Box 1450
Alexandria, Virginia 22313-1450
www.uspto.gov

APPLICATION NUMBER	FILING OR 371(C) DATE	FIRST NAMED APPLICANT	ATTY. DOCKET NO./TITLE
14/100,323	12/09/2013	Thien Nguyen	INCEP-001

CONFIRMATION NO. 5734

POA ACCEPTANCE LETTER

138718
Polsinelli LLP
3 Embarcadero Center
Suite 1350
San Francisco, CA 94111

OC000000080888746

Date Mailed: 02/25/2016

NOTICE OF ACCEPTANCE OF POWER OF ATTORNEY

This is in response to the Power of Attorney filed 02/11/2016.

The Power of Attorney in this application is accepted. Correspondence in this application will be mailed to the above address as provided by 37 CFR 1.33.

Questions about the contents of this notice and the requirements it sets forth should be directed to the Office of Data Management, Application Assistance Unit, at **(571) 272-4000** or **(571) 272-4200** or **1-888-786-0101**.

/zabraha/

PTO/SB/39 (11-15)
Approved for use through 07/31/2016. OMB 0651-0031
U.S. Patent and Trademark Office; U.S. DEPARTMENT OF COMMERCE
Under the Paperwork Reduction Act of 1995, no persons are required to respond to a collection of information unless it displays a valid OMB control number

AUTHORIZATION OR RESCISSION OF AUTHORIZATION TO PERMIT ACCESS TO APPLICATION-AS-FILED BY PARTICIPATING OFFICES

Send completed form to: Commissioner for Patents
P.O. Box 1450, Alexandria, VA 22313-1450

Application Number (if known): 14/100,323	Filing Date: 12-09-2013
First Named Inventor: Thien Nguyen	Attorney Docket Number: INCEP-001
Title (Required) INTRAORAL DENTAL SUCTION AND ISOLATION SYSTEM	

Check either box 1 or 2 below, but **not** both:

1. ☒ By checking this box, the undersigned hereby **grants the USPTO authority** to provide the European Patent Office (EPO), the Japan Patent Office (JPO), the Korean Intellectual Property Office (KIPO), the State Intellectual Property Office of the People's Republic of China (SIPO), the World Intellectual Property Organization(WIPO), and any other foreign intellectual property office participating with the USPTO in a bilateral or multilateral priority document exchange agreement in which a foreign application claiming priority to the instant patent application is filed, access to: (1) the instant patent application-as-filed and its related bibliographic data, (2) any foreign or domestic application to which priority or benefit is claimed by the instant application and its related bibliographic data, and (3) the date of filing of this Authorization. See 37 CFR 1.14(h)(1).

2. ☐ By checking this box, the undersigned hereby **rescinds the previous authority granted to the USPTO** to provide the EPO, JPO, KIPO, SIPO, WIPO or any other foreign intellectual property office participating with the USPTO in a bilateral or multilateral priority document exchange agreement access to the documents and information identified in paragraph 1 above.

This rescission of the previous authorization will not be effective unless and until an appropriate USPTO official recognizes and acts on the rescission.

However, once the application has published or is otherwise publicly available, the USPTO may provide access to the application in accordance with 37 CFR 1.14.

NOTE: This form must be signed by an authorized party in accordance with 37 CFR 1.14(c). Please see 37 CFR 1.4(d) for the form of the signature. If necessary, submit multiple forms for more than one signature, see below.*

Signature /Tam Thanh Pham/	Date July 27, 2016
Name (Print/Typed) Tam Thanh Pham	Practitioner Registration Number (if applicable) 50565
Name of Assignee (if applicable)	Title (if applicable)

☐ *Total of 1 forms are submitted.

This collection of information is required by 37 CFR 1.14(h). The information is required to obtain or retain a benefit by the public which is to file (and by the USPTO to process) an application. Confidentiality is governed by 35 U.S.C. 122 and 37 CFR 1.11 and 1.14. This collection is estimated to take 6 minutes to complete, including gathering, preparing, and submitting the completed application form to the USPTO. Time will vary depending upon the individual case. Any comments on the amount of time you require to complete this form and/or suggestions for reducing this burden, should be sent to the Chief Information Officer, U.S. Patent and Trademark Office, U.S. Department of Commerce, P.O. Box 1450, Alexandria, VA 22313-1450. DO NOT SEND FEES OR COMPLETED FORMS TO THIS ADDRESS. **SEND TO: Commissioner for Patents, P.O. Box 1450, Alexandria, VA 22313-1450.**

If you need assistance in completing the form, call 1-800-PTO-9199 and select option 2.

Privacy Act Statement

The **Privacy Act of 1974 (P.L. 93-579)** requires that you be given certain information in connection with your submission of the attached form related to a patent application or patent. Accordingly, pursuant to the requirements of the Act, please be advised that: (1) the general authority for the collection of this information is 35 U.S.C. 2(b)(2); (2) furnishing of the information solicited is voluntary; and (3) the principal purpose for which the information is used by the U.S. Patent and Trademark Office is to process and/or examine your submission related to a patent application or patent. If you do not furnish the requested information, the U.S. Patent and Trademark Office may not be able to process and/or examine your submission, which may result in termination of proceedings or abandonment of the application or expiration of the patent.

The information provided by you in this form will be subject to the following routine uses:

1. The information on this form will be treated confidentially to the extent allowed under the Freedom of Information Act (5 U.S.C. 552) and the Privacy Act (5 U.S.C 552a). Records from this system of records may be disclosed to the Department of Justice to determine whether disclosure of these records is required by the Freedom of Information Act.
2. A record from this system of records may be disclosed, as a routine use, in the course of presenting evidence to a court, magistrate, or administrative tribunal, including disclosures to opposing counsel in the course of settlement negotiations.
3. A record in this system of records may be disclosed, as a routine use, to a Member of Congress submitting a request involving an individual, to whom the record pertains, when the individual has requested assistance from the Member with respect to the subject matter of the record.
4. A record in this system of records may be disclosed, as a routine use, to a contractor of the Agency having need for the information in order to perform a contract. Recipients of information shall be required to comply with the requirements of the Privacy Act of 1974, as amended, pursuant to 5 U.S.C. 552a(m).
5. A record related to an International Application filed under the Patent Cooperation Treaty in this system of records may be disclosed, as a routine use, to the International Bureau of the World Intellectual Property Organization, pursuant to the Patent Cooperation Treaty.
6. A record in this system of records may be disclosed, as a routine use, to another federal agency for purposes of National Security review (35 U.S.C. 181) and for review pursuant to the Atomic Energy Act (42 U.S.C. 218(c)).
7. A record from this system of records may be disclosed, as a routine use, to the Administrator, General Services, or his/her designee, during an inspection of records conducted by GSA as part of that agency's responsibility to recommend improvements in records management practices and programs, under authority of 44 U.S.C. 2904 and 2906. Such disclosure shall be made in accordance with the GSA regulations governing inspection of records for this purpose, and any other relevant (*i.e.*, GSA or Commerce) directive. Such disclosure shall not be used to make determinations about individuals.
8. A record from this system of records may be disclosed, as a routine use, to the public after either publication of the application pursuant to 35 U.S.C. 122(b) or issuance of a patent pursuant to 35 U.S.C. 151. Further, a record may be disclosed, subject to the limitations of 37 CFR 1.14, as a routine use, to the public if the record was filed in an application which became abandoned or in which the proceedings were terminated and which application is referenced by either a published application, an application open to public inspection or an issued patent.
9. A record from this system of records may be disclosed, as a routine use, to a Federal, State, or local law enforcement agency, if the USPTO becomes aware of a violation or potential violation of law or regulation.

Electronic Acknowledgement Receipt

EFS ID:	26475472
Application Number:	14100323
International Application Number:	
Confirmation Number:	5734
Title of Invention:	INTRAORAL DENTAL SUCTION AND ISOLATION SYSTEM
First Named Inventor/Applicant Name:	Thien Nguyen
Customer Number:	138718
Filer:	TamThanh Thi Pham/Cheri Houle
Filer Authorized By:	TamThanh Thi Pham
Attorney Docket Number:	INCEP-001
Receipt Date:	27-JUL-2016
Filing Date:	09-DEC-2013
Time Stamp:	18:02:49
Application Type:	Utility under 35 USC 111(a)

Payment information:

Submitted with Payment	no

File Listing:

Document Number	Document Description	File Name	File Size(Bytes)/ Message Digest	Multi Part /.zip	Pages (if appl.)
1	Auth or Resc of Auth to Access Appl by DAS/PDX Office	INCEP-001_AUTH_ACCESS_7-27-16.pdf	114686 0dea5ae4635147aa9065e7b5eeafa1f586fd223f	no	2

Warnings:

Information:	
Total Files Size (in bytes):	114686

This Acknowledgement Receipt evidences receipt on the noted date by the USPTO of the indicated documents, characterized by the applicant, and including page counts, where applicable. It serves as evidence of receipt similar to a Post Card, as described in MPEP 503.

New Applications Under 35 U.S.C. 111
If a new application is being filed and the application includes the necessary components for a filing date (see 37 CFR 1.53(b)-(d) and MPEP 506), a Filing Receipt (37 CFR 1.54) will be issued in due course and the date shown on this Acknowledgement Receipt will establish the filing date of the application.

National Stage of an International Application under 35 U.S.C. 371
If a timely submission to enter the national stage of an international application is compliant with the conditions of 35 U.S.C. 371 and other applicable requirements a Form PCT/DO/EO/903 indicating acceptance of the application as a national stage submission under 35 U.S.C. 371 will be issued in addition to the Filing Receipt, in due course.

New International Application Filed with the USPTO as a Receiving Office
If a new international application is being filed and the international application includes the necessary components for an international filing date (see PCT Article 11 and MPEP 1810), a Notification of the International Application Number and of the International Filing Date (Form PCT/RO/105) will be issued in due course, subject to prescriptions concerning national security, and the date shown on this Acknowledgement Receipt will establish the international filing date of the application.

UNITED STATES PATENT AND TRADEMARK OFFICE

UNITED STATES DEPARTMENT OF COMMERCE
United States Patent and Trademark Office
Address: COMMISSIONER FOR PATENTS
P.O. Box 1450
Alexandria, Virginia 22313-1450
www.uspto.gov

APPLICATION NUMBER	FILING or 371(c) DATE	GRP ART UNIT	FIL FEE REC'D	ATTY.DOCKET.NO	TOT CLAIMS	IND CLAIMS
14/100,323	12/09/2013	3732	1400	INCEP-001	18	1

CONFIRMATION NO. 5734

UPDATED FILING RECEIPT

OC000000084711389

138718
Polsinelli LLP
3 Embarcadero Center
Suite 1350
San Francisco, CA 94111

Date Mailed: 07/29/2016

Receipt is acknowledged of this non-provisional patent application. The application will be taken up for examination in due course. Applicant will be notified as to the results of the examination. Any correspondence concerning the application must include the following identification information: the U.S. APPLICATION NUMBER, FILING DATE, NAME OF APPLICANT, and TITLE OF INVENTION. Fees transmitted by check or draft are subject to collection. Please verify the accuracy of the data presented on this receipt. **If an error is noted on this Filing Receipt, please submit a written request for a Filing Receipt Correction. Please provide a copy of this Filing Receipt with the changes noted thereon. If you received a "Notice to File Missing Parts" for this application, please submit any corrections to this Filing Receipt with your reply to the Notice. When the USPTO processes the reply to the Notice, the USPTO will generate another Filing Receipt incorporating the requested corrections**

Inventor(s)

Thien Nguyen, Santa Ana, CA;
Tam Thanh Pham, San Francisco, CA;

Applicant(s)

Incept Incorporated, Santa Ana, CA;

Assignment For Published Patent Application

Incept Incorporated, Santa Ana, CA

Power of Attorney: The patent practitioners associated with Customer Number 138718

Domestic Priority data as claimed by applicant

This appln claims benefit of 61/734,939 12/07/2012

Foreign Applications for which priority is claimed (You may be eligible to benefit from the **Patent Prosecution Highway** program at the USPTO. Please see http://www.uspto.gov for more information.) - None.
Foreign application information must be provided in an Application Data Sheet in order to constitute a claim to foreign priority. See 37 CFR 1.55 and 1.76.

Permission to Access Application via Priority Document Exchange: Yes

Permission to Access Search Results: No

Applicant may provide or rescind an authorization for access using Form PTO/SB/39 or Form PTO/SB/69 as appropriate.

If Required, Foreign Filing License Granted:

The country code and number of your priority application, to be used for filing abroad under the Paris Convention, is **US 14/100,323**

Projected Publication Date: Not Applicable

Non-Publication Request: No

Early Publication Request: No
**** SMALL ENTITY ****
Title

INTRAORAL DENTAL SUCTION AND ISOLATION SYSTEM

Preliminary Class

433

Statement under 37 CFR 1.55 or 1.78 for AIA (First Inventor to File) Transition Applications: No

PROTECTING YOUR INVENTION OUTSIDE THE UNITED STATES

Since the rights granted by a U.S. patent extend only throughout the territory of the United States and have no effect in a foreign country, an inventor who wishes patent protection in another country must apply for a patent in a specific country or in regional patent offices. Applicants may wish to consider the filing of an international application under the Patent Cooperation Treaty (PCT). An international (PCT) application generally has the same effect as a regular national patent application in each PCT-member country. The PCT process **simplifies** the filing of patent applications on the same invention in member countries, but **does not result** in a grant of "an international patent" and does not eliminate the need of applicants to file additional documents and fees in countries where patent protection is desired.

Almost every country has its own patent law, and a person desiring a patent in a particular country must make an application for patent in that country in accordance with its particular laws. Since the laws of many countries differ in various respects from the patent law of the United States, applicants are advised to seek guidance from specific foreign countries to ensure that patent rights are not lost prematurely.

Applicants also are advised that in the case of inventions made in the United States, the Director of the USPTO must issue a license before applicants can apply for a patent in a foreign country. The filing of a U.S. patent application serves as a request for a foreign filing license. The application's filing receipt contains further information and guidance as to the status of applicant's license for foreign filing.

Applicants may wish to consult the USPTO booklet, "General Information Concerning Patents" (specifically, the section entitled "Treaties and Foreign Patents") for more information on timeframes and deadlines for filing foreign patent applications. The guide is available either by contacting the USPTO Contact Center at 800-786-9199, or it can be viewed on the USPTO website at http://www.uspto.gov/web/offices/pac/doc/general/index.html.

For information on preventing theft of your intellectual property (patents, trademarks and copyrights), you may wish to consult the U.S. Government website, http://www.stopfakes.gov. Part of a Department of Commerce initiative, this website includes self-help "toolkits" giving innovators guidance on how to protect intellectual property in specific countries such as China, Korea and Mexico. For questions regarding patent enforcement issues, applicants may call the U.S. Government hotline at 1-866-999-HALT (1-866-999-4258).

LICENSE FOR FOREIGN FILING UNDER

Title 35, United States Code, Section 184

Title 37, Code of Federal Regulations, 5.11 & 5.15

GRANTED

The applicant has been granted a license under 35 U.S.C. 184, if the phrase "IF REQUIRED, FOREIGN FILING LICENSE GRANTED" followed by a date appears on this form. Such licenses are issued in all applications where the conditions for issuance of a license have been met, regardless of whether or not a license may be required as set forth in 37 CFR 5.15. The scope and limitations of this license are set forth in 37 CFR 5.15(a) unless an earlier license has been issued under 37 CFR 5.15(b). The license is subject to revocation upon written notification. The date indicated is the effective date of the license, unless an earlier license of similar scope has been granted under 37 CFR 5.13 or 5.14.

This license is to be retained by the licensee and may be used at any time on or after the effective date thereof unless it is revoked. This license is automatically transferred to any related applications(s) filed under 37 CFR 1.53(d). This license is not retroactive.

The grant of a license does not in any way lessen the responsibility of a licensee for the security of the subject matter as imposed by any Government contract or the provisions of existing laws relating to espionage and the national security or the export of technical data. Licensees should apprise themselves of current regulations especially with respect to certain countries, of other agencies, particularly the Office of Defense Trade Controls, Department of State (with respect to Arms, Munitions and Implements of War (22 CFR 121-128)); the Bureau of Industry and Security, Department of Commerce (15 CFR parts 730-774); the Office of Foreign AssetsControl, Department of Treasury (31 CFR Parts 500+) and the Department of Energy.

NOT GRANTED

No license under 35 U.S.C. 184 has been granted at this time, if the phrase "IF REQUIRED, FOREIGN FILING LICENSE GRANTED" DOES NOT appear on this form. Applicant may still petition for a license under 37 CFR 5.12, if a license is desired before the expiration of 6 months from the filing date of the application. If 6 months has lapsed from the filing date of this application and the licensee has not received any indication of a secrecy order under 35 U.S.C. 181, the licensee may foreign file the application pursuant to 37 CFR 5.15(b).

SelectUSA

The United States represents the largest, most dynamic marketplace in the world and is an unparalleled location for business investment, innovation, and commercialization of new technologies. The U.S. offers tremendous resources and advantages for those who invest and manufacture goods here. Through SelectUSA, our nation works to promote and facilitate business investment. SelectUSA provides information assistance to the international investor community; serves as an ombudsman for existing and potential investors; advocates on behalf of U.S. cities, states, and regions competing for global investment; and counsels U.S. economic development organizations on investment attraction best practices. To learn more about why the United States is the best country in the world to develop technology, manufacture products, deliver services, and grow your business, visit http://www.SelectUSA.gov or call +1-202-482-6800.

UNITED STATES PATENT AND TRADEMARK OFFICE

UNITED STATES DEPARTMENT OF COMMERCE
United States Patent and Trademark Office
Address: COMMISSIONER FOR PATENTS
P.O. Box 1450
Alexandria, Virginia 22313-1450
www.uspto.gov

APPLICATION NUMBER	FILING OR 371(C) DATE	FIRST NAMED APPLICANT	ATTY. DOCKET NO./TITLE
14/100,323	12/09/2013	Thien Nguyen	INCEP-001

CONFIRMATION NO. 5734

138718
Polsinelli LLP
3 Embarcadero Center
Suite 1350
San Francisco, CA 94111

OC000000084711390

Date Mailed: 07/29/2016

NOTICE OF ACCEPTANCE OF AUTHORIZATION TO PERMIT ACCESS TO APPLICATION VIA PRIORITY DOCUMENT EXCHANGE

This is in response to the applicant's authorization to permit access to the application-as-filed by participating offices under 37 CFR 1.14(h)(1) submitted on 07/27/2016.

The authorization to permit access to the application under 37 CFR 1.14(h)(1) is accepted.

Questions about the contents of this notice and the requirements it sets forth should be directed to the Office of Data Management, Application Assistance Unit, at **(571) 272-4000** or **(571) 272-4200** or **1-888-786-0101**.

/hnguyen/

IN THE UNITED STATES PATENT AND TRADEMARK OFFICE

APPLICANT(S):	Thien Nguyen et al.
APPLICATION NO.:	14/100,323
PATENT NO.:	8,911,232
FILING DATE:	December 9, 2013
TITLE:	Intraoral Dental Suction and Isolation System
ART UNIT:	3732
EXAMINER:	Hao D. Mai
CONFIRM NO.:	5734
ATTY.DKT.NO.:	INCEP-001

REQUEST FOR CERTIFICATE OF CORRECTION
PURSUANT TO 37 CFR § 1.322

Via EFS-Web
Attn: Certificate of Correction Branch
Commissioner for Patents
P.O. Box 1450
Alexandria VA 22313-1450

Commissioner:

A Certificate of Correction for the above-referenced U.S. Patent is sought herein pursuant to 35 U.S.C. § 255. This petition is presented in accordance with 37 C.F.R. § 1.323.

The Applicant respectfully request the following correction be entered:

In Figure 5, reference 170 should be changed to 180.

The correction is consistent with at least FIG. 1E, as well as descriptions of FIG. 5 and the bridge structure 180. *See e.g.*,'232, 4:41-44 (stating *inter alia* that "FIG. 5 is a close-up view of the bridge structure 180"). As such, no new matter is added.

The Applicant's representative respectfully requests that a Certificate of Correction be issued for the above-referenced application. Submitted herewith is Form PTO/SB/44 and the requisite fee of $100 under 37 C.F.R. § 1.20(a). No other fees are believed to be due in connection with the filing of this paper, however, should any fees be deemed necessary, the Commissioner is hereby authorized to deduct any such fees from Deposit Account No. 50-1662 referencing the above docket number.

If the Examiner should have any questions, please contact the undersigned attorney.

Dated: July 11, 2017

Respectfully submitted,

/Stephanie T. Vu/

Stephanie T. Vu, Registration No. 73063
Attorney for Applicant(s)
USPTO Customer No. 138718

POLSINELLI LLP
3 Embarcadero Center, Suite 2400
San Francisco, CA 94111
uspt@polsinelli.com
Tel: (415) 248-2116
Fax: (415) 520-0486

PTO/SB/44 (09-07)
Approved for use through 01/31/2020. OMB 0651-0033
U.S. Patent and Trademark Office; U.S. DEPARTMENT OF COMMERCE
Under the Paperwork Reduction Act of 1995, no persons are required to respond to a collection of information unless it displays a valid OMB control number.
(Also Form PTO-1050)

UNITED STATES PATENT AND TRADEMARK OFFICE
CERTIFICATE OF CORRECTION

PATENT NO. : 8,911,232 B2

APPLICATION NO.: 14/100,323

ISSUE DATE : December 16, 2014

INVENTOR(S) : Thien Nguyen, et al.

It is certified that an error appears or errors appear in the above-identified patent and that said Letters Patent is hereby corrected as shown below:

- In Figure 5, reference 170 should be changed to 180.

MAILING ADDRESS OF SENDER (Please do not use Customer Number below):
Stephanie T Vu, POLSINELLI PC, 3 Embarcadero Center, Suite 2400, San Francisco, CA 94111

This collection of information is required by 37 CFR 1.322, 1.323, and 1.324. The information is required to obtain or retain a benefit by the public which is to file (and by the USPTO to process) an application. Confidentiality is governed by 35 U.S.C. 122 and 37 CFR 1.14. This collection is estimated to take 1.0 hour to complete, including gathering, preparing, and submitting the completed application form to the USPTO. Time will vary depending upon the individual case. Any comments on the amount of time you require to complete this form and/or suggestions for reducing this burden, should be sent to the Chief Information Officer, U.S. Patent and Trademark Office, U.S. Department of Commerce, P.O. Box 1450, Alexandria, VA 22313-1450. DO NOT SEND FEES OR COMPLETED FORMS TO THIS ADDRESS. **SEND TO: Attention Certificate of Corrections Branch, Commissioner for Patents, P.O. Box 1450, Alexandria, VA 22313-1450.**

If you need assistance in completing the form, call 1-800-PTO-9199 and select option 2.

Privacy Act Statement

The **Privacy Act of 1974 (P.L. 93-579)** requires that you be given certain information in connection with your submission of the attached form related to a patent application or patent. Accordingly, pursuant to the requirements of the Act, please be advised that: (1) the general authority for the collection of this information is 35 U.S.C. 2(b)(2); (2) furnishing of the information solicited is voluntary; and (3) the principal purpose for which the information is used by the U.S. Patent and Trademark Office is to process and/or examine your submission related to a patent application or patent. If you do not furnish the requested information, the U.S. Patent and Trademark Office may not be able to process and/or examine your submission, which may result in termination of proceedings or abandonment of the application or expiration of the patent.

The information provided by you in this form will be subject to the following routine uses:

1. The information on this form will be treated confidentially to the extent allowed under the Freedom of Information Act (5 U.S.C. 552) and the Privacy Act (5 U.S.C 552a). Records from this system of records may be disclosed to the Department of Justice to determine whether disclosure of these records is required by the Freedom of Information Act.
2. A record from this system of records may be disclosed, as a routine use, in the course of presenting evidence to a court, magistrate, or administrative tribunal, including disclosures to opposing counsel in the course of settlement negotiations.
3. A record in this system of records may be disclosed, as a routine use, to a Member of Congress submitting a request involving an individual, to whom the record pertains, when the individual has requested assistance from the Member with respect to the subject matter of the record.
4. A record in this system of records may be disclosed, as a routine use, to a contractor of the Agency having need for the information in order to perform a contract. Recipients of information shall be required to comply with the requirements of the Privacy Act of 1974, as amended, pursuant to 5 U.S.C. 552a(m).
5. A record related to an International Application filed under the Patent Cooperation Treaty in this system of records may be disclosed, as a routine use, to the International Bureau of the World Intellectual Property Organization, pursuant to the Patent Cooperation Treaty.
6. A record in this system of records may be disclosed, as a routine use, to another federal agency for purposes of National Security review (35 U.S.C. 181) and for review pursuant to the Atomic Energy Act (42 U.S.C. 218(c)).
7. A record from this system of records may be disclosed, as a routine use, to the Administrator, General Services, or his/her designee, during an inspection of records conducted by GSA as part of that agency's responsibility to recommend improvements in records management practices and programs, under authority of 44 U.S.C. 2904 and 2906. Such disclosure shall be made in accordance with the GSA regulations governing inspection of records for this purpose, and any other relevant (*i.e.*, GSA or Commerce) directive. Such disclosure shall not be used to make determinations about individuals.
8. A record from this system of records may be disclosed, as a routine use, to the public after either publication of the application pursuant to 35 U.S.C. 122(b) or issuance of a patent pursuant to 35 U.S.C. 151. Further, a record may be disclosed, subject to the limitations of 37 CFR 1.14, as a routine use, to the public if the record was filed in an application which became abandoned or in which the proceedings were terminated and which application is referenced by either a published application, an application open to public inspection or an issued patent.
9. A record from this system of records may be disclosed, as a routine use, to a Federal, State, or local law enforcement agency, if the USPTO becomes aware of a violation or potential violation of law or regulation.

Electronic Patent Application Fee Transmittal

Application Number:	14100323
Filing Date:	09-Dec-2013
Title of Invention:	INTRAORAL DENTAL SUCTION AND ISOLATION SYSTEM
First Named Inventor/Applicant Name:	Thien Nguyen
Filer:	Stephanie Thien Vu/Kristine Goodman
Attorney Docket Number:	INCEP-001

Filed as Large Entity

Filing Fees for Utility under 35 USC 111(a)

Description	Fee Code	Quantity	Amount	Sub-Total in USD($)
Basic Filing:				
Pages:				
Claims:				
Miscellaneous-Filing:				
Petition:				
Patent-Appeals-and-Interference:				
Post-Allowance-and-Post-Issuance:				
Certificate of correction	1811	1	100	100

Description	Fee Code	Quantity	Amount	Sub-Total in USD($)
Extension-of-Time:				
Miscellaneous:				
			Total in USD ($)	**100**

Electronic Acknowledgement Receipt

EFS ID:	29743326
Application Number:	14100323
International Application Number:	
Confirmation Number:	5734
Title of Invention:	INTRAORAL DENTAL SUCTION AND ISOLATION SYSTEM
First Named Inventor/Applicant Name:	Thien Nguyen
Customer Number:	138718
Filer:	Stephanie Thien Vu/Kristine Goodman
Filer Authorized By:	Stephanie Thien Vu
Attorney Docket Number:	INCEP-001
Receipt Date:	11-JUL-2017
Filing Date:	09-DEC-2013
Time Stamp:	11:06:36
Application Type:	Utility under 35 USC 111(a)

Payment information:

Submitted with Payment	yes
Payment Type	DA
Payment was successfully received in RAM	$100
RAM confirmation Number	071117INTEFSW00010527501662
Deposit Account	
Authorized User	

The Director of the USPTO is hereby authorized to charge indicated fees and credit any overpayment as follows:

File Listing:

Document Number	Document Description	File Name	File Size(Bytes)/ Message Digest	Multi Part /.zip	Pages (if appl.)
1	Request for Certificate of Correction	RequestForCertofCorrection.pdf	135646 8a4d9e16ba9e9bcadb71497fa106f0bda2c4ed31	no	2
Warnings:					
Information:					
2	Request for Certificate of Correction	CertificateofCorrection.pdf	150156 d80f3b047e2d261719e3d02a39c89f9a0cfa51ae	no	2
Warnings:					
Information:					
3	Fee Worksheet (SB06)	fee-info.pdf	30237 63978da6a34b122761b17b0484da9ad8d617c0f1	no	2
Warnings:					
Information:					
		Total Files Size (in bytes):	316039		

This Acknowledgement Receipt evidences receipt on the noted date by the USPTO of the indicated documents, characterized by the applicant, and including page counts, where applicable. It serves as evidence of receipt similar to a Post Card, as described in MPEP 503.

New Applications Under 35 U.S.C. 111
If a new application is being filed and the application includes the necessary components for a filing date (see 37 CFR 1.53(b)-(d) and MPEP 506), a Filing Receipt (37 CFR 1.54) will be issued in due course and the date shown on this Acknowledgement Receipt will establish the filing date of the application.
National Stage of an International Application under 35 U.S.C. 371
If a timely submission to enter the national stage of an international application is compliant with the conditions of 35 U.S.C. 371 and other applicable requirements a Form PCT/DO/EO/903 indicating acceptance of the application as a national stage submission under 35 U.S.C. 371 will be issued in addition to the Filing Receipt, in due course.
New International Application Filed with the USPTO as a Receiving Office
If a new international application is being filed and the international application includes the necessary components for an international filing date (see PCT Article 11 and MPEP 1810), a Notification of the International Application Number and of the International Filing Date (Form PCT/RO/105) will be issued in due course, subject to prescriptions concerning national security, and the date shown on this Acknowledgement Receipt will establish the international filing date of the application.

UNITED STATES PATENT AND TRADEMARK OFFICE

UNITED STATES DEPARTMENT OF COMMERCE
United States Patent and Trademark Office
Address: COMMISSIONER FOR PATENTS
P.O. Box 1450
Alexandria, Virginia 22313-1450
www.uspto.gov

APPLICATION NO.	FILING DATE	FIRST NAMED INVENTOR	ATTORNEY DOCKET NO.	CONFIRMATION NO.
14/100,323	12/09/2013	Thien Nguyen	INCEP-001	5734

138718 7590 07/24/2017
Polsinelli LLP
3 Embarcadero Center
Suite 2400
San Francisco, CA 94111

EXAMINER
MAI, HAO D

ART UNIT	PAPER NUMBER
3732	

NOTIFICATION DATE	DELIVERY MODE
07/24/2017	ELECTRONIC

Please find below and/or attached an Office communication concerning this application or proceeding.

The time period for reply, if any, is set in the attached communication.

Notice of the Office communication was sent electronically on above-indicated "Notification Date" to the following e-mail address(es):

uspt@polsinelli.com
sfpatent@polsinelli.com

UNITED STATES PATENT AND TRADEMARK OFFICE

Commissioner for Patents
United States Patent and Trademark Office
P.O. Box 1450
Alexandria, VA 22313-1450
www.uspto.gov

Patent No. 8911232
Issued Date: 16 December, 2014
Appl. No: 14/100,323
Filed.: 09 December 2013

PART (A) RESPONSE FOR CERTIFICATES OF CORRECTION

This is a decision on the Certificate of Correction request filed 11 July 2017.

The request for issuance of Certificate of Correction for the above-identified correction(s) under the provisions of 37 CFR 1.322 and/or 1.323 is hereby:

(Check one)
☐ Approved ☐ Approved in Part ☒ Denied

Comments: The correction involves a reference numeral in Figure 5. However, there is not associated drawing correction submitted by applicant with the request. The Office does not make drawing corrections.

PART (B) PETITION UNDER 37 CFR 1.324 OR 37 CFR 1.48

☐ This is a decision on the petition filed to correct inventorship under 37 CFR 1.324.

☐ This is a decision on the request under 37 CFR 1.48, petition filed . In view of the fact that the patent has already issued, the request under 37 CFR 1.48 has been treated as a petition to correct inventorship under 37 CFR 1.324.

The petition is hereby: ☐ Granted ☐ Dismissed

Comment:

The patented filed is being forwarded to Certificate of Corrections Branch for issuance of a certificate naming only the actual inventor or inventors.

/Cris L. Rodriguez/
Supervisory Patent Examiner, Art Unit 3732
Technology Center 3700
Phone: 571-272-0000

Certificates of Correction Branch email: CustomerServiceCoC@uspto.gov CoC Central Phone Number: (703) 756-1814

IN THE UNITED STATES PATENT AND TRADEMARK OFFICE

APPLICANT(S):	Thien Nguyen et al.
APPLICATION NO.:	14/100,323
PATENT NO.:	8,911,232
FILING DATE:	December 9, 2013
TITLE:	Intraoral Dental Suction and Isolation System
ART UNIT:	3732
EXAMINER:	Hao D. Mai
CONFIRM NO.:	5734
ATTY.DKT.NO.:	INCEP-001

REQUEST FOR CERTIFICATE OF CORRECTION
PURSUANT TO 37 CFR § 1.322

Via EFS-Web
Attn: Certificate of Correction Branch
Commissioner for Patents
P.O. Box 1450
Alexandria VA 22313-1450

Commissioner:

A Certificate of Correction for the above-referenced U.S. Patent is sought herein pursuant to 35 U.S.C. § 255. This petition is presented in accordance with 37 C.F.R. § 1.323.

The Applicant respectfully requests the following correction be entered:

In Figure 5, reference 170 should be changed to 180.

Submitted herewith is replacement drawing sheet 1/1 showing Figure 5. The replacement drawing sheet is labeled as "Replacement Sheet" in compliance with 37 C.F.R. § 1.121(d). No new matter is added.

The correction is consistent with at least FIG. 1E, as well as descriptions of FIG. 5 and the bridge structure 180. *See e.g.*,'323, 4:41-44 (stating *inter alia* that "FIG. 5 is a close-up view of the bridge structure 180"). As such, no new matter is added.

The Applicant's representative respectfully requests that a Certificate of Correction be issued for the above-referenced application. Submitted herewith is Form PTO/SB/44 and the requisite fee of $150 under 37 C.F.R. § 1.20(a). No other fees are believed to be due in connection with the filing of this paper, however, should any fees be deemed necessary, the Commissioner is hereby authorized to deduct any such fees from Deposit Account No. 50-1662 referencing the above docket number.

If the Examiner should have any questions, please contact the undersigned attorney.

Dated: August 9, 2018

Respectfully submitted,

/Stephanie T. Vu/

Stephanie T. Vu, Registration No. 73063
Attorney for Applicant(s)
USPTO Customer No. 138718

POLSINELLI LLP
3 Embarcadero Center, Suite 2400
San Francisco, CA 94111
uspt@polsinelli.com
Tel: (415) 248-2116
Fax: (415) 520-0486

PTO/SB/44 (09-07)
Approved for use through 01/31/2020. OMB 0651-0033
U.S. Patent and Trademark Office; U.S. DEPARTMENT OF COMMERCE
Under the Paperwork Reduction Act of 1995, no persons are required to respond to a collection of information unless it displays a valid OMB control number.
(Also Form PTO-1050)

UNITED STATES PATENT AND TRADEMARK OFFICE
CERTIFICATE OF CORRECTION

PATENT NO. : 8,911,232 B2

APPLICATION NO.: 14/100,323

ISSUE DATE : December 16, 2014

INVENTOR(S) : Thien Nguyen, et al.

It is certified that an error appears or errors appear in the above-identified patent and that said Letters Patent is hereby corrected as shown below:

- In the drawings, Sheet 9, Figure 5, the reference numeral 170 should be changed to 180:

MAILING ADDRESS OF SENDER (Please do not use Customer Number below):
Tam Thanh Pham, POLSINELLI PC, 3 Embarcadero Center, Suite 2400, San Francisco, CA 94111

This collection of information is required by 37 CFR 1.322, 1.323, and 1.324. The information is required to obtain or retain a benefit by the public which is to file (and by the USPTO to process) an application. Confidentiality is governed by 35 U.S.C. 122 and 37 CFR 1.14. This collection is estimated to take 1.0 hour to complete, including gathering, preparing, and submitting the completed application form to the USPTO. Time will vary depending upon the individual case. Any comments on the amount of time you require to complete this form and/or suggestions for reducing this burden, should be sent to the Chief Information Officer, U.S. Patent and Trademark Office, U.S. Department of Commerce, P.O. Box 1450, Alexandria, VA 22313-1450. DO NOT SEND FEES OR COMPLETED FORMS TO THIS ADDRESS. **SEND TO: Attention Certificate of Corrections Branch, Commissioner for Patents, P.O. Box 1450, Alexandria, VA 22313-1450.**

If you need assistance in completing the form, call 1-800-PTO-9199 and select option 2.

Under the Paperwork Reduction Act of 1995, no persons are required to respond to a collection of information unless it displays a valid OMB control number.

UNITED STATES PATENT AND TRADEMARK OFFICE
CERTIFICATE OF CORRECTION

PATENT NO. : 8,911,232 B2

APPLICATION NO.: 14/100,323

ISSUE DATE : December 16, 2014

INVENTOR(S) : Thien Nguyen, et al.

It is certified that an error appears or errors appear in the above-identified patent and that said Letters Patent is hereby corrected as shown below:

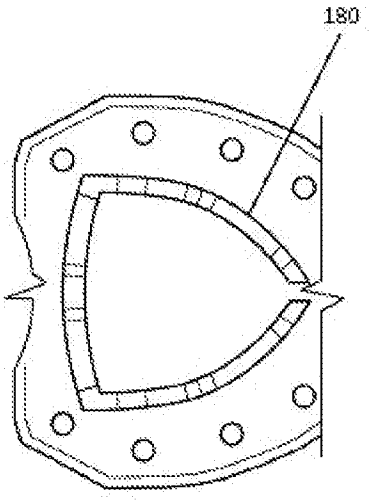

FIG. 5

MAILING ADDRESS OF SENDER (Please do not use Customer Number below):
Tam Thanh Pham, POLSINELLI PC, 3 Embarcadero Center, Suite 2400, San Francisco, CA 94111

This collection of information is required by 37 CFR 1.322, 1.323, and 1.324. The information is required to obtain or retain a benefit by the public which is to file (and by the USPTO to process) an application. Confidentiality is governed by 35 U.S.C. 122 and 37 CFR 1.14. This collection is estimated to take 1.0 hour to complete, including gathering, preparing, and submitting the completed application form to the USPTO. Time will vary depending upon the individual case. Any comments on the amount of time you require to complete this form and/or suggestions for reducing this burden, should be sent to the Chief Information Officer, U.S. Patent and Trademark Office, U.S. Department of Commerce, P.O. Box 1450, Alexandria, VA 22313-1450. DO NOT SEND FEES OR COMPLETED FORMS TO THIS ADDRESS. **SEND TO: Attention Certificate of Corrections Branch, Commissioner for Patents, P.O. Box 1450, Alexandria, VA 22313-1450.**

If you need assistance in completing the form, call 1-800-PTO-9199 and select option 2.

Privacy Act Statement

The **Privacy Act of 1974 (P.L. 93-579)** requires that you be given certain information in connection with your submission of the attached form related to a patent application or patent. Accordingly, pursuant to the requirements of the Act, please be advised that: (1) the general authority for the collection of this information is 35 U.S.C. 2(b)(2); (2) furnishing of the information solicited is voluntary; and (3) the principal purpose for which the information is used by the U.S. Patent and Trademark Office is to process and/or examine your submission related to a patent application or patent. If you do not furnish the requested information, the U.S. Patent and Trademark Office may not be able to process and/or examine your submission, which may result in termination of proceedings or abandonment of the application or expiration of the patent.

The information provided by you in this form will be subject to the following routine uses:

1. The information on this form will be treated confidentially to the extent allowed under the Freedom of Information Act (5 U.S.C. 552) and the Privacy Act (5 U.S.C 552a). Records from this system of records may be disclosed to the Department of Justice to determine whether disclosure of these records is required by the Freedom of Information Act.
2. A record from this system of records may be disclosed, as a routine use, in the course of presenting evidence to a court, magistrate, or administrative tribunal, including disclosures to opposing counsel in the course of settlement negotiations.
3. A record in this system of records may be disclosed, as a routine use, to a Member of Congress submitting a request involving an individual, to whom the record pertains, when the individual has requested assistance from the Member with respect to the subject matter of the record.
4. A record in this system of records may be disclosed, as a routine use, to a contractor of the Agency having need for the information in order to perform a contract. Recipients of information shall be required to comply with the requirements of the Privacy Act of 1974, as amended, pursuant to 5 U.S.C. 552a(m).
5. A record related to an International Application filed under the Patent Cooperation Treaty in this system of records may be disclosed, as a routine use, to the International Bureau of the World Intellectual Property Organization, pursuant to the Patent Cooperation Treaty.
6. A record in this system of records may be disclosed, as a routine use, to another federal agency for purposes of National Security review (35 U.S.C. 181) and for review pursuant to the Atomic Energy Act (42 U.S.C. 218(c)).
7. A record from this system of records may be disclosed, as a routine use, to the Administrator, General Services, or his/her designee, during an inspection of records conducted by GSA as part of that agency's responsibility to recommend improvements in records management practices and programs, under authority of 44 U.S.C. 2904 and 2906. Such disclosure shall be made in accordance with the GSA regulations governing inspection of records for this purpose, and any other relevant (*i.e.*, GSA or Commerce) directive. Such disclosure shall not be used to make determinations about individuals.
8. A record from this system of records may be disclosed, as a routine use, to the public after either publication of the application pursuant to 35 U.S.C. 122(b) or issuance of a patent pursuant to 35 U.S.C. 151. Further, a record may be disclosed, subject to the limitations of 37 CFR 1.14, as a routine use, to the public if the record was filed in an application which became abandoned or in which the proceedings were terminated and which application is referenced by either a published application, an application open to public inspection or an issued patent.
9. A record from this system of records may be disclosed, as a routine use, to a Federal, State, or local law enforcement agency, if the USPTO becomes aware of a violation or potential violation of law or regulation.

REPLACEMENT SHEET

1/1

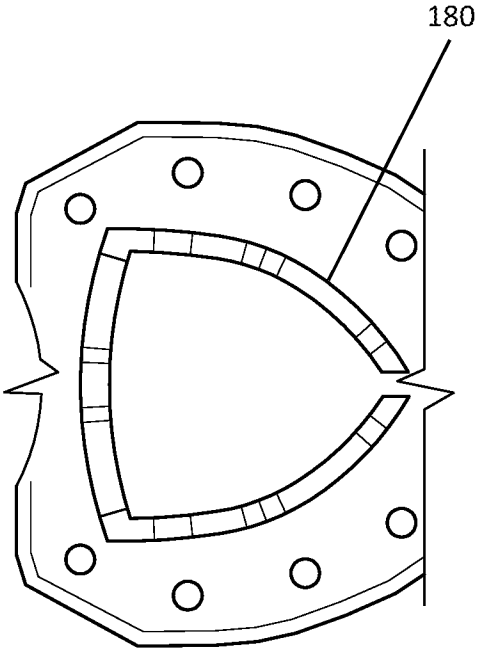

FIG. 5

Electronic Patent Application Fee Transmittal

Application Number:	14100323
Filing Date:	09-Dec-2013
Title of Invention:	INTRAORAL DENTAL SUCTION AND ISOLATION SYSTEM
First Named Inventor/Applicant Name:	Thien Nguyen
Filer:	Stephanie Thien Vu/Kristine Goodman
Attorney Docket Number:	INCEP-001

Filed as Small Entity

Filing Fees for Utility under 35 USC 111(a)

Description	Fee Code	Quantity	Amount	Sub-Total in USD($)
Basic Filing:				
Pages:				
Claims:				
Miscellaneous-Filing:				
Petition:				
Patent-Appeals-and-Interference:				
Post-Allowance-and-Post-Issuance:				
CERTIFICATE OF CORRECTION	2811	1	150	150

Description	Fee Code	Quantity	Amount	Sub-Total in USD($)
Extension-of-Time:				
Miscellaneous:				
			Total in USD ($)	**150**

Electronic Acknowledgement Receipt

EFS ID:	33421454
Application Number:	14100323
International Application Number:	
Confirmation Number:	5734
Title of Invention:	INTRAORAL DENTAL SUCTION AND ISOLATION SYSTEM
First Named Inventor/Applicant Name:	Thien Nguyen
Customer Number:	138718
Filer:	Stephanie Thien Vu/Kristine Goodman
Filer Authorized By:	Stephanie Thien Vu
Attorney Docket Number:	INCEP-001
Receipt Date:	09-AUG-2018
Filing Date:	09-DEC-2013
Time Stamp:	12:59:33
Application Type:	Utility under 35 USC 111(a)

Payment information:

Submitted with Payment	yes
Payment Type	DA
Payment was successfully received in RAM	$150
RAM confirmation Number	080918INTEFSW00013625501662
Deposit Account	
Authorized User	

The Director of the USPTO is hereby authorized to charge indicated fees and credit any overpayment as follows:

File Listing:

Document Number	Document Description	File Name	File Size(Bytes)/ Message Digest	Multi Part /.zip	Pages (if appl.)
1	Request for Certificate of Correction	RequestCertofCorrection.pdf	82184 b0ec01e393bf5f632186be0c1b0c234c37c59f2f	no	2
Warnings:					
Information:					
2	Request for Certificate of Correction	CertificateOfCorrection_Incep-001.pdf	1734668 5231094f46134281985d7abb188eb9b2a77aafda	no	3
Warnings:					
Information:					
3	Drawings-only black and white line drawings	ReplacementSheetFig5.pdf	68390 aa79d811d9539cd8475505f1ab3ad3a83aee564f	no	1
Warnings:					
Information:					
4	Fee Worksheet (SB06)	fee-info.pdf	30261 00dfd08c12b23421db964729aca725978b4e6f44	no	2
Warnings:					
Information:					
			Total Files Size (in bytes):	1915503	

This Acknowledgement Receipt evidences receipt on the noted date by the USPTO of the indicated documents, characterized by the applicant, and including page counts, where applicable. It serves as evidence of receipt similar to a Post Card, as described in MPEP 503.

New Applications Under 35 U.S.C. 111
If a new application is being filed and the application includes the necessary components for a filing date (see 37 CFR 1.53(b)-(d) and MPEP 506), a Filing Receipt (37 CFR 1.54) will be issued in due course and the date shown on this Acknowledgement Receipt will establish the filing date of the application.
National Stage of an International Application under 35 U.S.C. 371
If a timely submission to enter the national stage of an international application is compliant with the conditions of 35 U.S.C. 371 and other applicable requirements a Form PCT/DO/EO/903 indicating acceptance of the application as a national stage submission under 35 U.S.C. 371 will be issued in addition to the Filing Receipt, in due course.
New International Application Filed with the USPTO as a Receiving Office
If a new international application is being filed and the international application includes the necessary components for an international filing date (see PCT Article 11 and MPEP 1810), a Notification of the International Application Number and of the International Filing Date (Form PCT/RO/105) will be issued in due course, subject to prescriptions concerning national security, and the date shown on this Acknowledgement Receipt will establish the international filing date of the application.

UNITED STATES PATENT AND TRADEMARK OFFICE

UNITED STATES DEPARTMENT OF COMMERCE
United States Patent and Trademark Office
Address: COMMISSIONER FOR PATENTS
P.O. Box 1450
Alexandria, Virginia 22313-1450
www.uspto.gov

APPLICATION NO.	FILING DATE	FIRST NAMED INVENTOR	ATTORNEY DOCKET NO.	CONFIRMATION NO.
14/100,323	12/09/2013	Thien Nguyen	INCEP-001	5734

138718 7590 08/29/2018
Polsinelli LLP
3 Embarcadero Center
Suite 2400
San Francisco, CA 94111
UNITED STATES OF AMERICA

EXAMINER
MAI, HAO D

ART UNIT	PAPER NUMBER
3732	

NOTIFICATION DATE	DELIVERY MODE
08/29/2018	ELECTRONIC

Please find below and/or attached an Office communication concerning this application or proceeding.

The time period for reply, if any, is set in the attached communication.

Notice of the Office communication was sent electronically on above-indicated "Notification Date" to the following e-mail address(es):

uspt@polsinelli.com
sfpatent@polsinelli.com

UNITED STATES PATENT AND TRADEMARK OFFICE

Commissioner for Patents
United States Patent and Trademark Office
P.O. Box 1450
Alexandria, VA 22313-1450
www.uspto.gov

Patent No. 8,911,232
Issued Date: 16 December, 2014
Appl. No: 14/100,323
Filed.: 09 December 2013

PART (A) RESPONSE FOR CERTIFICATES OF CORRECTION

This is a decision on the Certificate of Correction request filed 09 August 2018.

The request for issuance of Certificate of Correction for the above-identified correction(s) under the provisions of 37 CFR 1.322 and/or 1.323 is hereby:

(Check one)
☒ Approved ☐ Approved in Part ☐ Denied

Comments:

PART (B) PETITION UNDER 37 CFR 1.324 OR 37 CFR 1.48

☐ This is a decision on the petition filed to correct inventorship under 37 CFR 1.324.

☐ This is a decision on the request under 37 CFR 1.48, petition filed . In view of the fact that the patent has already issued, the request under 37 CFR 1.48 has been treated as a petition to correct inventorship under 37 CFR 1.324.

The petition is hereby: ☐ Granted ☐ Dismissed

Comment:

The patented filed is being forwarded to Certificate of Corrections Branch for issuance of a certificate naming only the actual inventor or inventors.

/Cris L. Rodriguez/
Supervisory Patent Examiner, Art Unit 3732
Technology Center 3700
Phone: 571-272-0000

Certificates of Correction Branch email: CustomerServiceCoC@uspto.gov CoC Central Phone Number: (703) 756-1814

UNITED STATES PATENT AND TRADEMARK OFFICE

CERTIFICATE OF CORRECTION

PATENT NO. : 8,911,232 B2
APPLICATION NO. : 14/100323
DATED : December 16, 2014
INVENTOR(S) : Thien Nguyen et al.

It is certified that error appears in the above-identified patent and that said Letters Patent is hereby corrected as shown below:

In the Drawings

Sheet 9, Figure 5, the reference numeral 170 should be changed to 180 as shown on the attached sheet.

Signed and Sealed this
Twenty-third Day of October, 2018

Andrei Iancu
Director of the United States Patent and Trademark Office

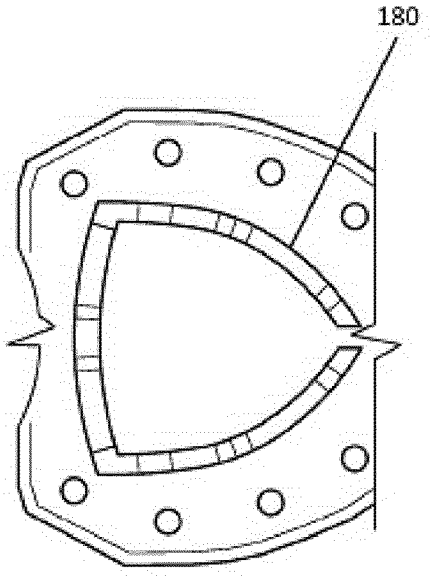

FIG. 5