UNITED STATES PATENT AND TRADEMARK OFFICE

BEFORE THE PATENT TRIAL AND APPEAL BOARD

ASCENTCARE DENTAL PRODUCTS, INC.
Petitioner

v.

SOLMETEX, LLC
Patent Owner

Patent No. 11,589,969
Issue Date: February 28, 2023
Title: INTRAORAL DEVICE WITH MESH

Inter Partes Review No. IPR2025-01020

PETITION FOR *INTER PARTES* REVIEW OF
U.S. PATENT NO. 11,589,969
UNDER 35 U.S.C. §§ 311-319 AND 37 C.F.R. § 42

Solmetex Ex. 2022
Ascentcare Dental Products v. Solmetex - IPR2025-01057

TABLE OF CONTENTS

I. FORMALITIES 13

A. Mandatory notices (37 C.F.R. § 42.8(a)(1)) 13

1. Real Party in Interest (37 C.F.R. § 42.8(b)(1)) 13

2. Designation of Lead and Backup Counsel (37 C.F.R. § 42.8(b)(3)) 13

3. Notice of Service 13

4. Related Proceedings 14

B. Grounds for Standing 14

C. Procedural Statements 14

II. INTRODUCTION 14

III. STATEMENT OF THE PRECISE RELIEF REQUESTED AND THE REASONS THEREFOR (37 C.F.R. § 42.22(a) 18

IV. U.S. PATENT NO. 11,589,969 (THE '969 PATENT) (EX1001) 20

A. Specification and Claims 20

B. Prosecution History of the '969 Patent 23

V. A PERSON HAVING ORDINARY SKILL IN THE ART 28

VI. CLAIM CONSTRUCTION UNDER 37 C.F.R. § 42.104(b)(3) 29

VII. BACKGROUND OF DENTAL MOUTHPIECES AND THE PRIOR ART RELIED UPON IN THIS PETITION 30

A. Dental Isolation Mouthpieces 30

B. Prior Art Patents and Printed Publications Relied Upon 31

1. Black 31

2. Park 32

3. Baughan 34

4. Johnson 34

Solmetex Ex. 2022
Ascentcare Dental Products v. Solmetex - IPR2025-01057

5. Hirsch 35

VIII. DISCRETION UNDER § 325(d) and § 314 35

IX. GROUNDS FOR UNPATENTABILITY 36

A. Ground 1: Claim 19 is anticipated under 35 U.S.C. § 102(b) by Black or rendered obvious under 35 U.S.C. § 103 by Black 36

1. Independent Claim 19 36

B. Ground 2: Claims 1-4, 6-9, 11-12, 14, and 16-19 are obvious under 35 U.S.C. § 103 by Park in view of Baughan 50

1. Independent Claim 1 50

2. Claim 2 67

3. Claim 3 67

4. Claim 4 67

5. Claim 6 67

6. Claim 7 68

7. Claim 8 68

8. Claim 9 68

9. Claim 11 69

10. Claim 12 69

11. Claim 13 69

12. Claim 14 69

13. Claim 16 70

14. Claim 17 71

15. Claim 18 71

16. Claim 19 71

C. Ground 3: Claim 10 is further obvious under 35 U.S.C. § 103 by Park in view of Baughan, Johnson, and Hirsch 72

1. Claim 10 72

D. Ground 4: Claims 13 and 15 are obvious under 35 U.S.C. § 103 by Park in view of Baughan, Johnson, and Black 74

1. Claim 13 74

2. Claim 15 75

E. Ground 5: Claim 19 is further obvious under 35 U.S.C. § 103 by Black in view of Hirsch 76

1. Claim 19 76

X. CONCLUSION 77

TABLE OF AUTHORITIES

Cases **Page(s)**

Boston Scientific Scimed, Inc. v. Cordis Corp.,
554 F.3d 982 (Fed. Cir. 2009); EX1003, ¶¶ 95-96 .....38, 41, 44

Phillips v. AWH Corp.,
415 F.3d 1303 (Fed. Cir. 2005) (en banc).....25

Pitney Bowes, Inc. v. Hewlett-Packard Co.,
182 F.3d 1298 (Fed. Cir. 1999).....32

Rowe v. Dror,
112 F.3d 473 (Fed. Cir. 1997).....32

Solmetex, LLC v. Ascentcare Dental Products, Inc.,
Case No. 1:24-cv-00954 (W.D. Mich).....10, 73

Statutes

35 U.S.C. § 102.....14

35 U.S.C. § 102(b) 15, 16, 32

35 U.S.C. § 103..... *passim*

35 U.S.C. §§ 311-319 10

35 U.S.C. § 314(a) 14

Other Authorities

37 C.F.R. § 42.....10

37 C.F.R. § 42.8.....74

37 C.F.R. § 42.8(a)(1).....9

37 C.F.R. § 42.8(b)(1).....9

37 C.F.R. § 42.8(b)(3).....9

37 C.F.R. § 42.10(b) 10

37 C.F.R. § 42.22(a).....14

37 C.F.R. § 42.63(e).....10

Solmetex Ex. 2022
Ascentcare Dental Products v. Solmetex - IPR2025-01057

37 C.F.R. § 42.104(b)(3).....25

37 C.F.R. § 42.106(a).....10

83 FR 51340 § 42.100(b).....25

MPEP 2111.02(II).....32, 35, 36

MPEP 2144.04(IV)(A).....45

MPEP 2144.04(IV)(A)-(B).....38, 39

MPEP 2144.04(V)(B).....58, 61

EXHIBIT INDEX

Ex #	Exhibit
1001	U.S. Patent No. 11,589,969 ("the '969 Patent")
1002	Prosecution History of the '969 Patent (part 1)
1003	Expert Declaration of Dr. Brian P. Black
1004	*Curriculum Vitae* for Dr. Brian P. Black
1005	U.S. Patent No. 8,029,280 to Black ("Black")
1006	Korean Patent No. 10-1082826 ("Park")
1007	U.S. Patent No. 3,101,543 ("Baughan")
1008	U.S. Patent No. 4,017,975 ("Johnson")
1009	Solmetex's Complaint for Patent Infringement against Ascentcare (ECF No. 1), filed September 16, 2024
1010	Service of Summons and Complaint upon Ascentcare (ECF No. 8), served December 10, 2024.
1011	Solmetex Infringement Contentions
1012	U.S. Patent Application No. 2003/0134253 ("Hirsch")
1013	Korean Patent No. 10-0654392
1014	U.S. Patent No. 8,911,232
1015	Prosecution History of U.S. Patent No. 8,911,232
1016	U.S. Patent No. 4,024,642
1017	U.S. Patent No. 1,731,322
1018	U.S. Patent No. 6,575,746
1019	U.S. Patent No. 9,532,858
1020	Prosecution History of the '969 Patent (part 2)
1021	Prosecution History of the '969 Patent (part 3)

LISTING OF CLAIMS

U.S. Patent No. 11,589,969 (Claims 1-4 and 6-19)

Claim Designation	Claim Language
Independent Claim 1 Preamble/ Limitation 1(a)	1. A dental mouthpiece comprising:
Limitation 1(b)	a main body portion, configured as a pocket having a plurality of perforations in communication with an interior open space,
Limitation 1(c)	the pocket having a first end that is narrower than a second end, the pocket is defined by:
Limitation 1(d)	a first wall having a shape defined by an exterior edge, wherein the first wall includes an opening to the interior open space of the pocket,
Limitation 1(e)	a second wall having a shape corresponding to the defined shape of the first wall, wherein an exterior edge of the second wall shape corresponds to the exterior edge of the first wall, and
Limitation 1(f)	a side wall connecting the exterior edge of the first wall to the corresponding edge of the second wall;
Limitation 1(g)	the second wall comprising a bridge structure that includes a plurality of protrusions integral with and protruding from an interior surface of the second wall and extending a span between the first wall and the second wall, wherein the bridge structure is not attached to the first wall,
Limitation 1(h)	wherein the plurality of protrusions of the bridge structure protrude from the interior surface of the second wall in a wave shape comprising one or more crests and one or more troughs and wherein the span between the first and the second wall is less than a width of the first and the second wall,
Limitation 1(i)	wherein a shape of the interior open space of the pocket spans between the defined shape of the first wall and the corresponding shape of the second wall, and
Limitation 1(j)	the pocket including a transition portion at the first end and that flexibly connects to a cheek retractor, wherein the plurality of

	perforations comprise one or more perforations at the transition portion.
Claim 2	2. The dental mouthpiece of claim 1, wherein the plurality of perforations are spaced to comprise a mesh.
Claim 3	3. The dental mouthpiece of claim 1, wherein the plurality of perforations further comprise one or more perforations in the second wall.
Claim 4	4. The dental mouthpiece of claim 3, wherein the one or more perforations on the second wall are spaced to comprise a mesh.
Claim 6	6. The dental mouthpiece of claim 1, further comprising a suction connector that connects to the interior open space of the pocket, the suction connector configured to connect to a vacuum source that provides suction of fluids through one or more of the plurality of the perforations of the pocket into the interior open space of the pocket towards the suction connector.
Claim 7	7. The dental mouthpiece of claim 1, wherein the plurality of protrusions of the bridge structure collectively provide spaced contact points that keep the first wall separated from the second wall during suction.
Claim 8	8. The dental mouthpiece of claim 7, wherein spaces between the plurality of protrusions of the bridge structure allow fluids within the interior open space of the pocket to be drawn therethrough towards a vacuum source that provides suction.
Claim 9	9. The dental mouthpiece of claim 1, wherein the cheek retractor has a surface that applies pressure when the dental mouthpiece is bent, wherein the pressure is based on resilience of a material from which the cheek retractor is formed.
Claim 10	10. The dental mouthpiece of claim 9, further comprising a stability bar protruding from the interior surface of the second wall along a longitudinal axis of the main body and extending through at least part of the cheek retractor, wherein a thickness of the stability bar corresponds to resilience by which the cheek retractor portion applies pressure during bending.
Claim 11	11. The dental mouthpiece of claim 1, wherein the main body portion is formed by injection-molding as one piece.
Claim 12	12. The dental mouthpiece of claim 1, wherein a material from which the main body is formed is a flexible, translucent, high heat-resistant, autoclavable silicone-based material.

Claim 13	13. The dental mouthpiece of claim 1, wherein the first wall of the main body portion and the second wall of the main body portion have different thicknesses.
Claim 14	14. The dental mouthpiece of claim 1, further comprising a mouth prop, the mouth prop is injection-molded in one piece.
Claim 15	15. The dental mouthpiece of claim 14 wherein the mouth prop comprises a bite block portion that includes an opening corresponding to a plug connected to the main body.
Independent Claim 16 Preamble/ Limitation 16(a)	16. A dental mouthpiece comprising:
Limitation 16(b)	a cheek retractor;
Limitation 16(c)	a main body portion having a first end connected to the cheek retractor, the main body portion configured as a pocket having a plurality of perforations in communication with an interior open space, the pocket is defined by:
Limitation 16(d)	a first wall having a shape defined by an exterior edge, wherein the first wall includes an opening to the interior open space of the pocket,
Limitation 16(e)	a second wall having a shape corresponding to the defined shape of the first wall, wherein an exterior edge of the second wall shape corresponds to the exterior edge of the first wall, and
Limitation 16(f)	a side wall connecting the exterior edge of the first wall to the corresponding edge of the second wall;
Limitation 16(g)	the second wall comprising a bridge structure that includes a plurality of protrusions integral with and protruding from an interior surface of the second wall and extending a span between the first wall and the second wall, wherein the bridge structure is not attached to the first wall, wherein the plurality of protrusions of the bridge structure protrude from the interior surface of the second wall in a wave shape comprising one or more crests and one or more troughs;
Limitation 16(h)	the pocket including a transition portion at the first end that flexibly connects to the cheek retractor;

Limitation 16(i)	a suction connector portion connected to a second end of the main body portion, the suction connector configured to connect a vacuum source to the interior open space of the pocket within the main body portion.
Claim 17	17. The dental mouthpiece of claim 16, wherein the plurality of perforations further comprise one or more perforations in the first wall.
Claim 18	18. The dental mouthpiece of claim 17, wherein the one or more perforations on the first wall are spaced to comprise a mesh.
Independent Claim 19 Preamble/ Limitation 19(a)	19. A dental mouthpiece comprising:
Limitation 19(b)	a main body portion configured as a pocket at least partially enclosing an interior space, the pocket defined by:
Limitation 19(c)	a first wall that includes one or more perforations in communication with the interior space of the pocket, the first wall having a shape defined by one or more edges along one or more sides;
Limitation 19(d)	a second wall having a shape that corresponds to the shape of the first wall, the shape of the second wall defined by one or more corresponding edges along one or more corresponding sides,
Limitation 19(e)	wherein the second wall includes a bridge structure that includes a plurality of protrusions integral with and protruding from an interior surface of the second wall within the interior space of the pocket, wherein the protrusions of the bridge structure protrude from the interior surface of the second wall toward the first wall in a wave shape comprising one or more crests and one or more troughs, and
Limitation 19(f)	a connecting wall that connects the one or more edges of the first wall to the one or more corresponding edges of the second wall across a span between the first wall and the second wall;
Limitation 19(g)	a suction connector portion connected to a first end of the main body portion, the suction connector configured to connect a vacuum source to the interior space of the pocket; and

Limitation 19(h)	a cheek retractor connected to a second end of the main body portion, wherein the second end is opposite the first end of the main body portion.

I. FORMALITIES

A. Mandatory notices (37 C.F.R. § 42.8(a)(1))

1. Real Party in Interest (37 C.F.R. § 42.8(b)(1))

Petitioner Ascentcare Dental Products, Inc. ("Ascentcare") is the real party-in-interest in this petition. Ascentcare is the defendant in the related proceeding identified in Section 1(A)(4).

2. Designation of Lead and Backup Counsel (37 C.F.R. § 42.8(b)(3))

Lead Counsel	First Backup Counsel
Nathan Sportel Reg. No. 67,980 Miller Johnson 45 Ottawa Ave. SW, Suite 1100 Grand Rapids, MI 49503 (616) 831-1793 Tel (616) 831-1701 Fax sporteln@millerjohnson.com	Brandon Griffith Reg. No. 74,934 Miller Johnson 500 Woodward Ave., Suite 2800 Detroit, MI 49503 (313) 672-6932 Tel (313) 672-6951 Fax griffithb@millerjohnson.com
	Backup Counsel
	Jacob Cowdrey Reg. No. 81,803 Miller Johnson 45 Ottawa Ave. SW, Suite 1100 Grand Rapids, MI 49503 (616) 831-1864 Tel (616) 831-1701 Fax cowdreyj@millerjohnson.com

3. Notice of Service

Please direct all correspondence to lead counsel at the above address. Petitioner also consents to email service at the above email addresses for lead and back-up counsel.

4. Related Proceedings

U.S. Patent No. 11,589,969 is presently asserted in *Solmetex, LLC v. Ascentcare Dental Products, Inc.*, Case No. 1:24-cv-00954 (W.D. Mich). The Complaint (EX1009) was served on December 10, 2024 (EX1010). Thus, this Petition is filed within one year after Ascentcare was served with a complaint for infringement. Ascentcare has not filed a separate civil action challenging the validity of the '969 Patent.

B. Grounds for Standing

Petitioner hereby certifies the '969 Patent is available for *inter partes* review, and Petitioner is not barred from requesting an *inter partes* review challenging the patent claims on the Grounds identified in the petition.

C. Procedural Statements

This Petition is filed in accordance with 37 C.F.R. § 42.106(a). A Power of Attorney (37 C.F.R. § 42.10(b) and Exhibit List (37 C.F.R. § 42.63(e)) are filed concurrently with this Petition. The fee is being paid via Deposit Acct. No. 50-0223. The United States Patent and Trademark Office is authorized to charge any fee deficiencies, or credit any overpayment, to Deposit Acct. No. 50-0223.

II. INTRODUCTION

Pursuant to 35 U.S.C. §§ 311-319 and 37 C.F.R. § 42, the undersigned, on behalf of and representing Ascentcare, petitions for *inter partes* review of claims 1-4 and 6-19 of U.S. Patent No. 11,589,969, entitled "Intraoral Device with Mesh"

("the ""969 Patent"), issued to Thien Nguyen and assigned to Solmetex, LLC ("Solmetex"). EX1001.

The '969 Patent discloses an enclosed dental mouthpiece with sidewalls. EX1001, FIG. 1A, 3:44-49; EX1003, ¶¶ 2, 26-40. The mouthpiece depicted and described by the '969 Patent follows the same general shape of prior art isolation mouthpieces known for decades. *See* EX1005, FIG. 4C; EX1005, FIG. 2; EX1012, FIG. 19A; EX1013, FIG. 1; EX1016, FIG. 2.

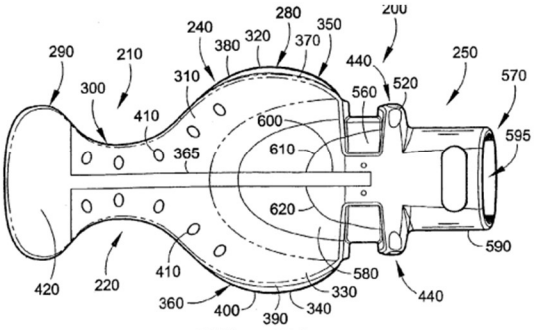

FIG. 19A

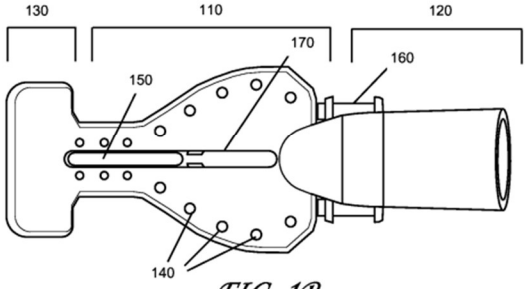

FIG. 1B

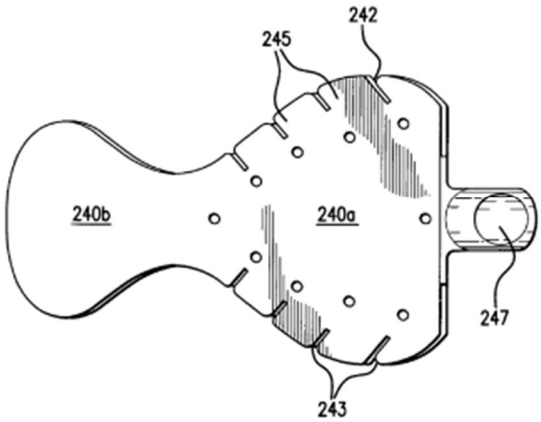

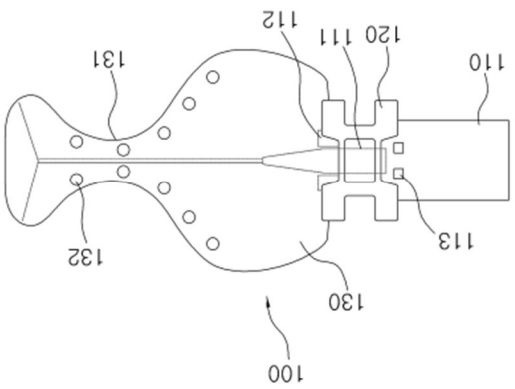

Originally, Patent Owner was content claiming a dental mouthpiece with enclosing sidewalls connecting an anterior wall to a posterior wall, as clearly shown

in FIG. 1A (and all other figures in the specification). EX1014, claim 1; EX1002, pp. 19 and 77.

However, through an aggressive continuation application practice aimed at Petitioner's product, Patent Owner sought exceedingly broad patent protection. Currently, Patent Owner has filed at least *seventeen* continuation applications stemming from the parent application. The '969 Patent resulted from one such continuation application.

Prosecution of the '969 Patent lasted almost 9 years, and the prosecution history demonstrates a conspicuous and dramatic shift in claim scope only one month after Petitioner released a very different product that, like much of the prior art predating the '969 Patent, lacks enclosing sidewalls that connect a posterior wall to an anterior wall. EX1020, pp. 326-329. Unsurprisingly, the '969 Patent and all of its subsequent continuation applications are no longer limited to claims having "sidewalls." Rather, they include a "connecting wall," which, according to Patent Owner, can be any structure that connects anterior and posterior walls. EX1011, p. 7. Notably, almost all prior art dental isolation mouthpiece discloses a connecting wall that satisfies Patent Owner's new interpretation of the '969 Patent's claim language. EX1005, FIGs. 1, 4C, 13; EX1012, FIG. 18B; EX1013, FIG. 1.

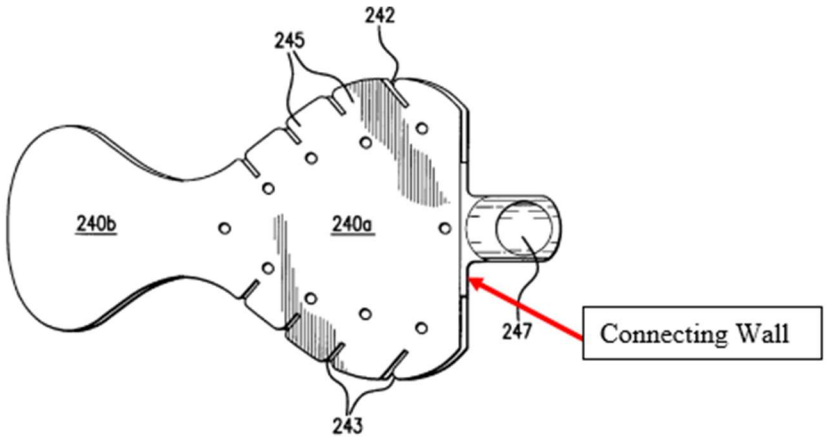

FIG.4C

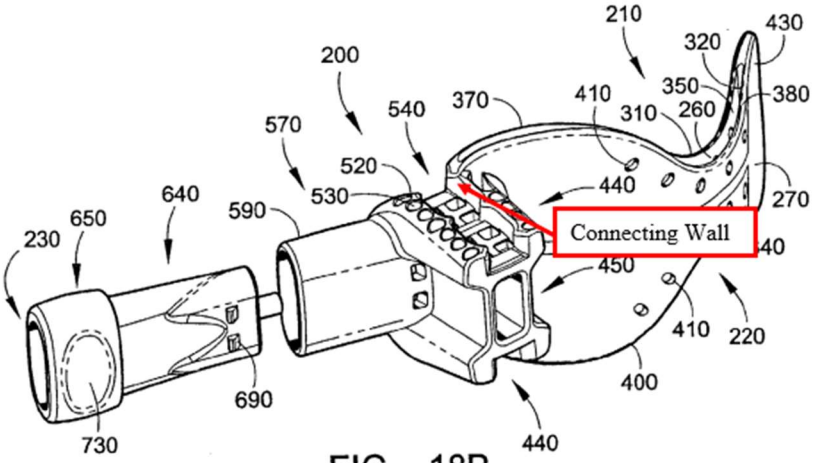

FIG. 18B

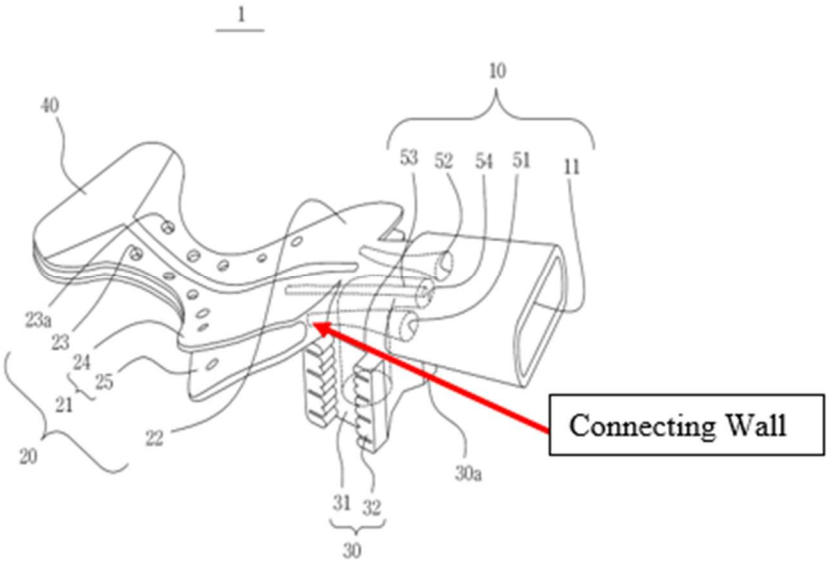

Understandably, in view of Patent Owner's very specific and nuanced arguments illustrating the importance of enclosing sidewalls, the Examiner does not appear to have appreciated the impact of Patent Owner's broadening effort. EX1002, pp. 377-379. To this end, Patent Owner went to great lengths explaining and showing what they believed they invented, unsurprisingly coloring the Examiner's understanding. In taking these new positions, Patent Owner completely disregarded the prosecution history of the parent application and statements it previously made to the Examiner.

These attempts to broaden claim scope resulted in the Examiner allowing claims that recaptured claim scope that Patent Owner willingly surrendered in view of the prior art during prosecution. Therefore, the claims of the '969 Patent are invalid for overbreadth.

A petition for *inter partes* review must demonstrate "a reasonable likelihood that the petitioner would prevail with respect to at least one of the claims challenged in the petition." 35 U.S.C. § 314(a). The Petition meets this threshold.

III. STATEMENT OF THE PRECISE RELIEF REQUESTED AND THE REASONS THEREFOR (37 C.F.R. § 42.22(a)

Petitioner respectfully requests a final written decision that claims 1-4, and 6-19 of the '969 Patent are unpatentable under 35 U.S.C. § 102 or § 103. Claims 1, 16 and 19 are independent.

Petitioner requests *inter partes* review of the '969 Patent based on the following references, all of which were filed, issued, or published prior to December 7, 2012[1], which is the earliest priority date of the '969 Patent. The prior art relevant to this Petition includes: U.S. Patent No. 8,029,280 to Black ("Black"), filed on Sept. 26, 2008 and issued on October 4, 2011, Korean Patent No. KR10-1082826 to Park ("Park"), filed on January 20, 2010, and issued on November 11, 2011, U.S. Patent No. 3,101,543 to Baughan ("Baughan"), filed on May 15, 1961 and issued on August 27, 1963, U.S. Patent No. 4,017,975 to Johnson ("Johnson"), filed on March 22, 1976 and issued on April 19, 1977, and U.S. Patent Application Publication No. 2003/0134253 to Hirsch ("Hirsch"), filed on February 27, 2003 and published on July 17, 2003. Black, Park, Baughan, Johnson, and Hirsch are all prior art under 35 U.S.C. § 102(b).

This Petition further relies upon the Declaration of Dr. Brian Black ("Black Decl." (EX1003); Black CV (EX1004)), which is relevant to the skill, knowledge, and expertise of a person having ordinary skill in the art ("PHOSITA") at the time

[1] Petitioner does not concede that all claim limitations are entitled to this priority date because the provisional application does not support all claim limitations. Nevertheless, all of the prior art relied upon in the Petition was published more than one year before the provisional application filing date. So, for the purposes of the Petition, it is irrelevant whether the provisional application supports all claim limitations.

of the invention and how that person would have understood and applied the prior art. The statutory grounds on which the challenge is based on:

(1) Claim 19 is anticipated or obvious under 35 U.S.C. § 102(b) or 35 U.S.C. § 103 by Black.

(2) Claims 1-4, 6-9, 11-12, 14, and 16-19 are obvious under 35 U.S.C. § 103 in view of Park, Baughan, and Johnson.

(3) Claim 10 is obvious under 35 U.S.C. § 103 in view of Park, Baughan, and Johnson and Hirsch.

(4) Claims 13 and 15 are obvious under 35 U.S.C. § 103 in view of Park, Baughan, and Johnson and Black.

(5) Claim 19 is obvious under 35 U.S.C. § 103 in view of Black and Hirsch.

IV. U.S. PATENT NO. 11,589,969 (THE '969 PATENT) (EX1001)

A. Specification and Claims

The '969 Patent describes a dental isolation mouthpiece with the same basic structure of conventional isolation mouthpieces. *E.g.* EX1005, FIG. 18; EX1012, FIG. 19A; EX1013, FIG. 2; EX1006, FIG. 2; EX1016, FIG. 2 (among others).

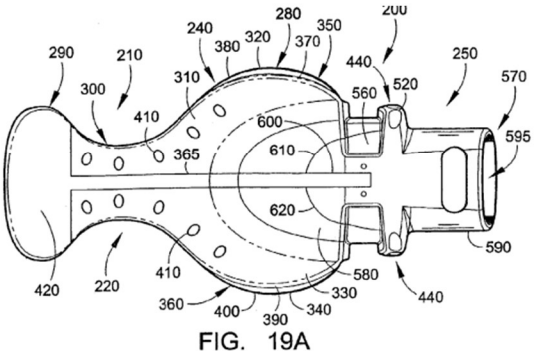

FIG. 19A

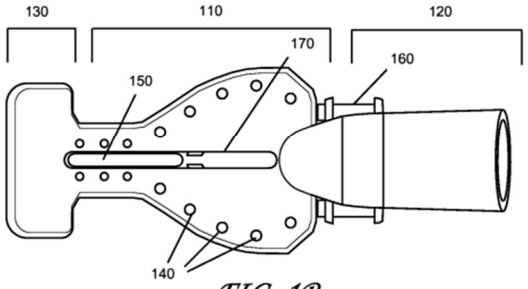

FIG. 1B

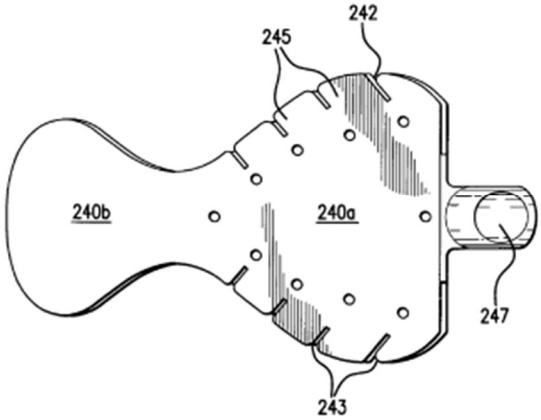

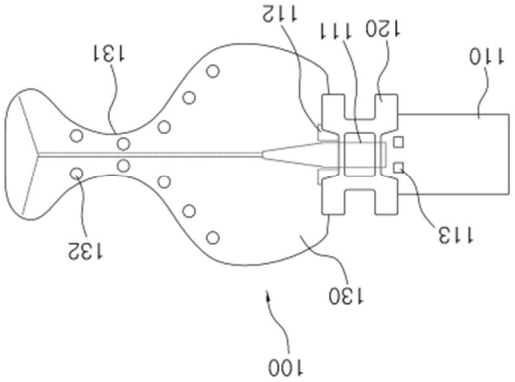

A mouthpiece having a suction connector, a bite block, a wider tongue retractor, a narrow isthmus, and a cheek retractor was well-established before the priority date of the ’969 Patent. *Id.*

Exactly like the prior art, the ’969 Patent describes a dental mouthpiece that attaches to a suction adapter and assists in removing fluids and debris from a patient's oral cavity during dental procedures. EX1001, Abstract. The mouthpiece has a main body portion 110, a cheek retractor portion 130, and a suction connector portion 120. EX1001, 3:23-25.

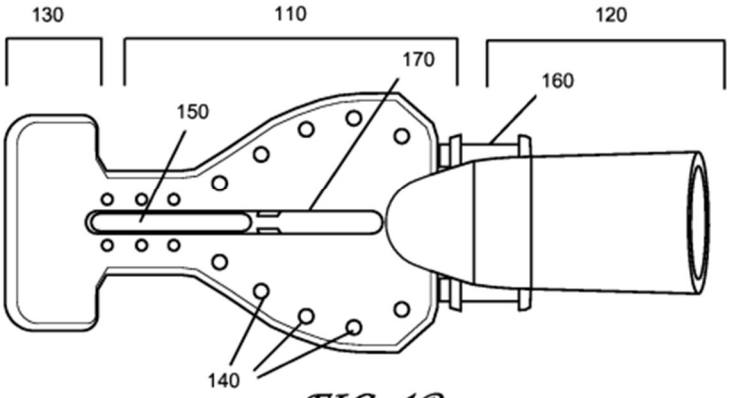

FIG. 1B

The main body portion is configured as a "pocket" with perforations 140 that communicate with an interior space within the pocket. EX1001, 4:4-19. The pocket is formed by an anterior wall, a posterior wall, and superior and inferior sidewalls, each connected to both the anterior and posterior walls, thereby enclosing the pocket. EX1001, 3:44-62. The posterior wall includes a bridge structure having spaced-apart protrusions formed in a "wave shape." EX1001, 4:46-65.

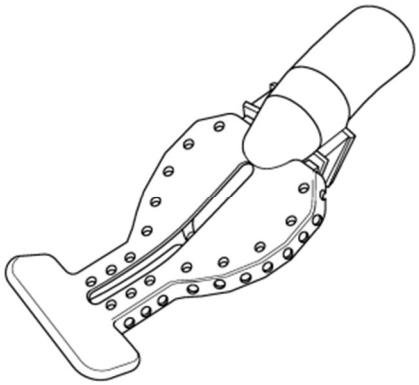

FIG. 1A

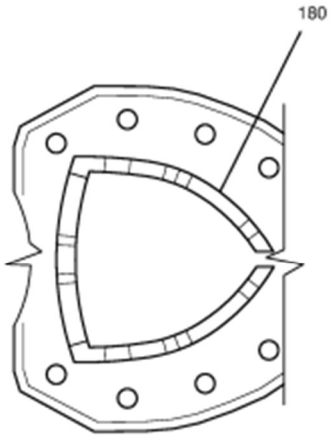

FIG. 5

The bridge structure keeps the anterior and posterior walls separated during suction and allows fluids to pass between the protrusions. *Id.*

B. **Prosecution History of the ’969 Patent**

The ’969 Patent was filed on March 27, 2014 and is a continuation of U.S. Patent No. 8,911,232. EX1002, pp. 3, 40. The ’969 Patent, despite being filed in 2014, did not issue until 2023 (just under 9 years of prosecution). EX1001, (45). The ’969 Patent claims a priority date of December 7, 2012, which was the filing date of a provisional application. EX1002, p. 3.

U.S. 8,911,232 (“the ’232 Patent”) includes claims reciting a dental mouthpiece having a pocket defined by an anterior wall, a posterior wall, and a sidewall. EX1014; claim 1. Notably, originally-presented claims of the application that resulted in the ‘232 Patent recited “a main body portion comprising a defined pocket having an anterior wall, a posterior wall, and a side wall in between the anterior wall and the posterior wall, wherein the anterior wall, the posterior wall, and the side wall define an interior portion of the defined pocket.” EX1015, p. 24.

During prosecution of the ’232 Patent, the Examiner cited Black as a secondary reference to teach “a bridge structure protruding from an interior surface of the posterior wall, the protruding structure comprising a plurality of spaced contact points that keep the anterior wall separated from the posterior wall during

suction." EX1015, pp. 51-52. Specifically, the Examiner pointed to transverse walls 48c shown in FIG. 3b of Black. *Id.*

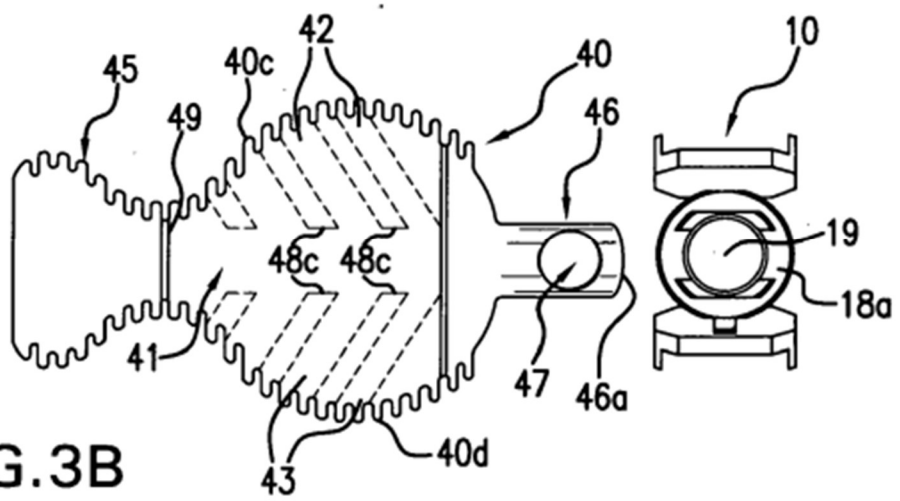

FIG.3B

In the first Office Action, the Examiner said, "Black et al. discloses an intraoral suction device comprising a wave-shaped bridge structure 48c having formed therein the interior wall of the device 40 (FIG. 3B; paragraph 80). Note that the troughs between bridges/transverse walls 48c allow for communication with the suction source." *Id.* In response to the First Office Action, Patent Owner focused its arguments on the primary reference, and only said this about Black: "Likewise, *Black* was merely relied upon to teach the claimed 'bridge structure' recited in dependent claims 8-10. *Black*... lacks any teaching that would teach the claim limitations of independent claim 1 that are missing from [primary reference]." EX1015, pp. 91-93. In other words, Patent Owner did not expressly disagree with the Examiner's rejection of dependent claims 8-10, did not argue that the Examiner

erred in suggesting that Black teaches a bridge structure, or in any way argue against this interpretation of Black or the conclusion that Black taught a bridge structure.

In the Second Office Action, the Examiner again cited Black, but noted that claim 9, which recited that contact points of the bridge structure formed a wave shape with contact points at crests of the wave shape, was now allowable over Black (and the primary reference). EX1015, pp. 109-111. The Examiner provided no reason why this limitation was allowable now but not in the First Office Action. Importantly, however, the Examiner found that Black taught "a bridge structure protruding from an interior surface of the posterior wall, the protruding bridge structure comprising a plurality of spaced contact points that keep the anterior wall separated from the posterior wall during suction." EX1015, p. 110. Patent Owner accepted the allowable subject matter of claim 9 and received an allowance. EX1015, pp. 130, 140.

After obtaining an allowance that resulted in the '232 Patent, Patent Owner filed a continuation application, which became the '969 Patent, seeking broader protection. EX1002, p. 19. The original independent claim presented during prosecution of the '969 Patent recited very few claim limitations and all were directed to the main body portion of the mouthpiece. *Id*. Importantly, one of those limitations was "a side wall connecting an edge of the anterior wall to an edge of the posterior wall, and wherein at least part of the side wall comprises a plurality of

perforations." *Id.* These claims faced the same prior art rejections (with Black notably absent) as the '232 Patent. EX1002, pp. 184-186. After the Patent Owner overcame those rejections, the Examiner again cited Black in the Second Office Action. EX1002, pp. 245-246. Despite citing Black against other claims, the Examiner did not cite Black against the claimed "bridge structure" of dependent claim 9, likely because this version of dependent claim 9 specifically recited that the bridge structure protruding from an interior surface of the posterior wall is also *unattached* to the anterior wall. Black, on the other hand, specifically teaches that transverse walls 48c connect to *both* the anterior and the posterior layers 48a, 48b. EX1002, pp. 225, 247; EX1005, 5:24-28.

Patent Owner attempted to overcome Black by amending the independent claims to include limitations directed to the detachable mouth prop. EX1002, p. 277. Nevertheless, the Examiner again found these limitations met mostly by Black. EX1002, p. 350. Thereafter, Patent Owner abandoned those claims and went to great lengths to show and describe what was meant by the claimed sidewall, and then Patent Owner argued that Black lacked any such sidewall. EX1002, pp. 376-378. These arguments over Black are particularly problematic in light of Patent Owner's assertion that the claimed "connecting wall" reads on something Black (and many other prior art references) clearly discloses — namely a connecting wall formed at

the first end of the mouthpiece near the suction connector. EX1011; *e.g.,* EX1005, FIG. 4C.

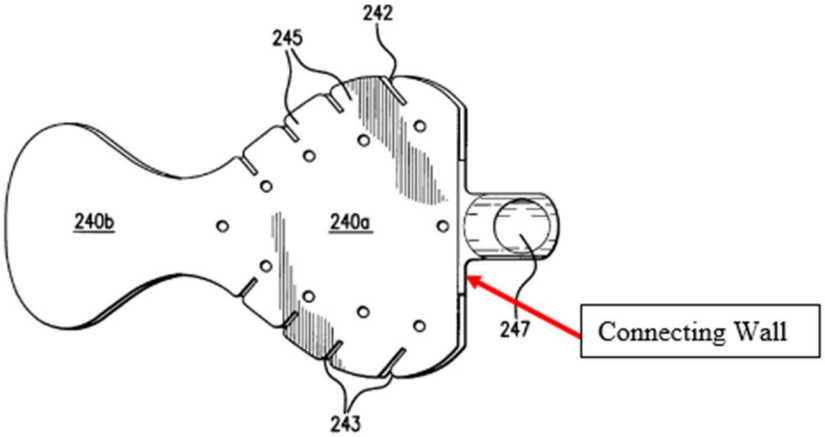

FIG.4C

Regardless, Patent Owner's arguments about a sidewall resulted in the Examiner applying a new reference, Hirsch, and withdrawing Black. EX1002, p. 428. In some subsequent Office Actions, the Examiner cited Black as a secondary reference, but Black was never cited again after July 15, 2019.

Of particular note, in 2017, the claims recited two sidewalls: a superior sidewall and an inferior sidewall. EX1002, p. 479. These limitations reflect the embodiments illustrated in FIGS. 1A-4 and described in the specification of the '969 Patent. EX1001, FIGS. 1A-4. These limitations remained in the claims until January 21, 2021[2] when Patent Owner filed a response removing them and attempted to pursue claims directed to a mouthpiece lacking *any* sidewalls. EX1020, pp. 326-329.

[2] Notably, Petitioner launched its own non-infringing, unenclosed, competing product in December 2020, just a month before the dramatic shift in claim scope.

Patent Owner also introduced a new claim 23 (now claim 19) that recited only two walls, one of which has the bridge structure. EX1020, p. 329. Notably, the Examiner allowed this claim – notwithstanding the fact that it was broader than the claims that the Examiner had previously rejected in view of Black – presumably (and understandably) because nearly 9 years has passed since the previous rejection in view of Black in a *different* patent application. EX1015, pp. 51-52, 109.

In response to the Patent Owner's January 21, 2021 amendment, the claims were allowed with an examiner amendment. EX1020, p. 328-352. However, after an apparent disagreement regarding the scope of the claims authorized in the Examiner amendment, the Patent Owner filed an RCE. EX1020, p. 423. At this point, the Examiner noticed the breadth of claim 23 and rejected it in view of Hirsch. Notably, the Examiner did not reject it in view of Black, despite the similar recitation of the bridge structure that was rejected in view of Black in the parent application. EX1020, p. 479; EX1015, pp. 51-52. The Examiner further included an essential elements rejection. EX1020, pp. 477-479. The claims were subsequently allowed after the Patent Owner added a few more limitations to comply with an essential elements rejection. EX1021, pp. 119-121, 294.

V. **A PERSON HAVING ORDINARY SKILL IN THE ART**

The prior art and the Black Declaration demonstrate that a PHOSITA, at the time the application corresponding to the '969 Patent was filed, would have been a

person with at least a B.S. degree in mechanical engineering or a related field with at least two years' experience designing medical devices. Less work experience may be compensated by a higher level of education, such as a master's degree, and vice versa. EX1003, ¶¶ 1, 3-25, 41-50.

VI. **CLAIM CONSTRUCTION UNDER 37 C.F.R. § 42.104(b)(3)**

Unless otherwise addressed herein, the terms of the '969 Patent's claims are to be given their plain and ordinary meaning, as understood by one of ordinary skill in the art, in view of the '969 Patent's specification. *See* 37 C.F.R. § 42.100(b); 83 FR 51340; *Phillips v. AWH Corp.*, 415 F.3d 1303 (Fed. Cir. 2005) (en banc). To the extent there is any departure from the plain and ordinary meaning, Petitioner adopted the constructions implied in Patent Owner's infringement contentions. EX1011; EX1003, ¶¶ 51-55.

Patent Owner appears ready to assert a much broader meaning of some terms that are not defined in the specification. For example, Patent Owner has accused Petitioner's product of infringing at least claim 19 of the '969 Patent by pointing to two walls of very different sizes and shapes as "corresponding," and also pointing to a bite block as a "connecting wall of the main body" despite the '969 Patent (i) describing the main body being *separate* from the mouth prop, and (ii) even going so far as to describe the mouth prop as detachable. EX1001, 5:19-37.

The parties are likely to dispute the scope of several terms, such as "end," "edge," "side," "corresponding shape," and "interior surface," EX1011. Nevertheless, all claims of the '969 Patent are invalid under either party's construction. Ground 1 addresses some of Patent Owner's broader construction, and Ground 2 addresses either Patent Owner's or Petitioner's construction of sidewall/connecting wall, "edge," "side," "end," "interior surface," and "corresponding shape." Indeed, Ground 2 shows a four-sided mouthpiece having identically-sized and shaped anterior and posterior walls without a bridge structure formed at the edges of the anterior or posterior wall.

Notwithstanding their likely suggestion to the contrary, Patent Owner did not invent a dental isolation mouthpiece that prevents suction collapse, nor did they invent a dental isolation mouthpiece with a wall that connects an anterior wall to a posterior wall at an edge of the mouthpiece.

VII. BACKGROUND OF DENTAL MOUTHPIECES AND THE PRIOR ART RELIED UPON IN THIS PETITION

A. Dental Isolation Mouthpieces

Dentists have isolated tissue and used suction during dental procedures for many years. EX1016, 2:42-46; EX1017; EX1003, ¶ 3, 10-11, 48.

The modern style isolation mouthpieces appears to have started with James Hirsch in 2001 (EX1018). Hirsch taught a suction connector, a bite block for engaging teeth on one side of the mouth, a wide main body that fits into the intraoral

cavity for tongue isolation, a narrow neck for wrapping around teeth on the other side of the mouth, and a cheek retractor. EX1018, Abstract. The '969 Patent (and many like it) follows this same general style and structure. EX1003, ¶ 27.

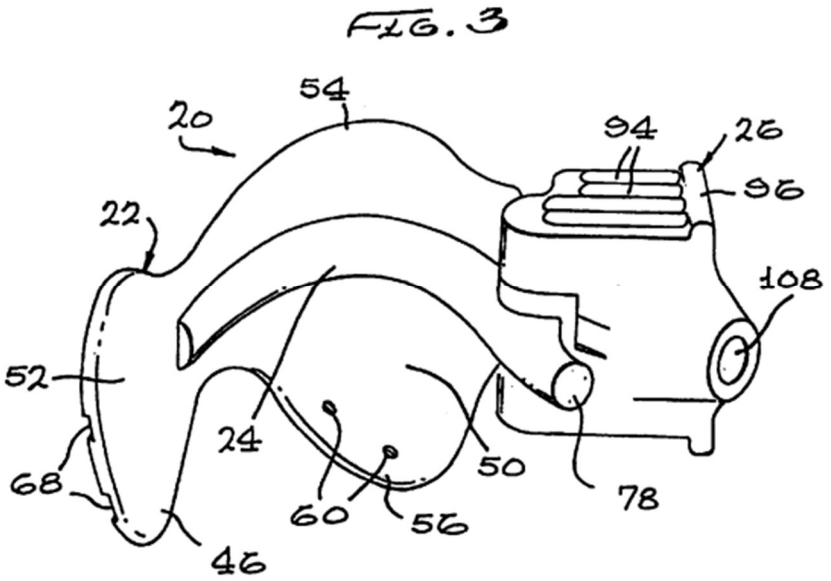

Hirsch improved on his design in 2003. EX1012, FIG. 19A; EX1001, FIG. 1B. The '969 Patent closely resembles this improved design.

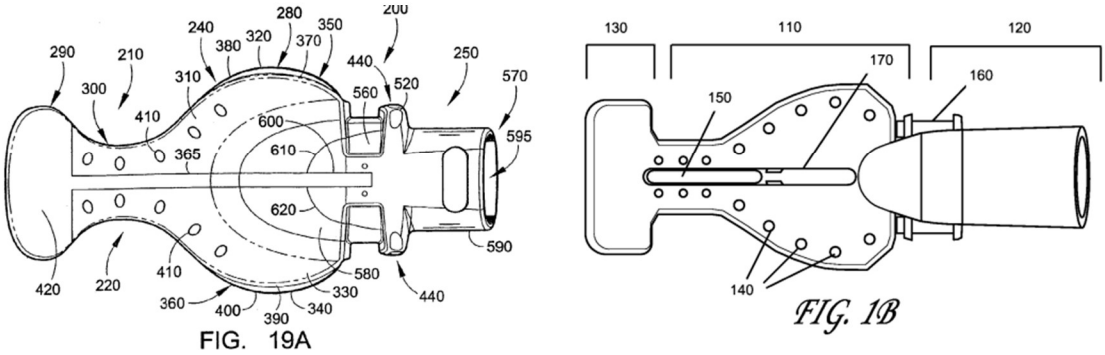

B. **Prior Art Patents and Printed Publications Relied Upon**

1. **Black**

Black teaches a dental isolation mouthpiece with the same basic shape as the ’969 Patent. EX1001, FIG. 1B; EX1005, FIG. 4C.

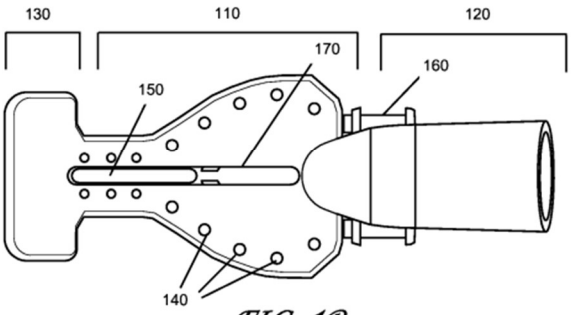

FIG. 1B

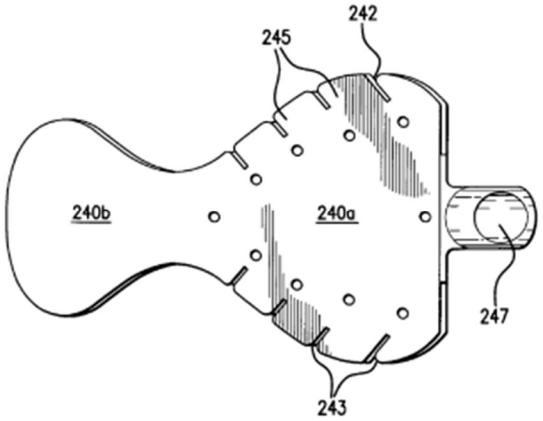

Black discloses several embodiments of an open tongue aspirator with several embodiments teaching an anterior layer that corresponds in size and shape to a posterior layer with transverse walls connecting the anterior layer to the posterior layer. EX1005, 5:21-59, 14:21-47. The transverse walls form channels therebetween and prevent the anterior and posterior layers from collapsing under suction. *Id.*; EX1003, ¶¶56-59.

Black also teaches a removable bite block. EX1005, 2:1-7, 15:36-51.

2. **Park**

Park teaches an enclosed dental isolation mouthpiece with the same basic shape as the ’969 Patent. EX1001, FIG. 1B; EX1006, FIG. 3.

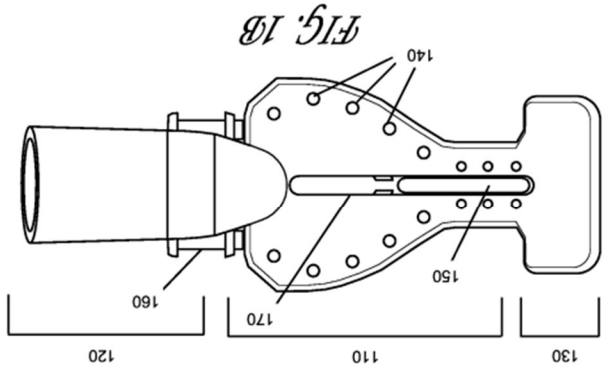

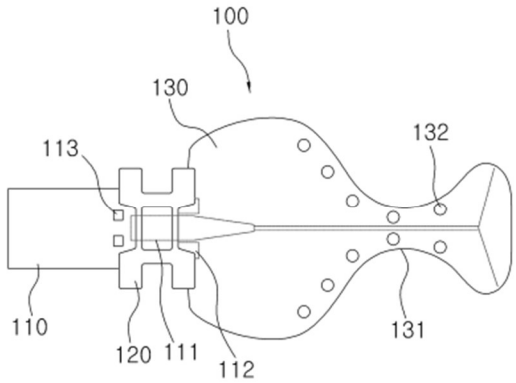

More specifically, Park teaches a mouth prop 100 that includes a hollow insertion port 110 that receives a suction line, a tooth support section 120 that engages a patient's teeth, and a tongue retraction portion 130 extending from the insertion port 110 and including a concave region 131 where the other teeth engage and a cheek retractor. EX1006, Abstract, FIG. 2, FIG. 6. Park shows suction ports 112 extending from the insertion port 110 into the tongue retraction portion 130 and fluidly connecting to through holes 132 formed on both the anterior and posterior wall of the tongue retraction portion 132. EX1006, ¶¶ 26-29, 31, 42, FIG. 2; EX1003, ¶¶ 60-62. Park depicts sidewalls connecting the anterior wall to the posterior wall of the mouthpiece. EX1006, FIG. 2.

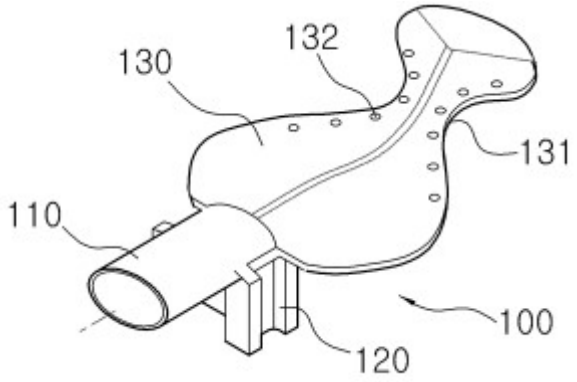

3. **Baughan**

Baughan teaches a saliva ejector that includes projecting discs 17 that prevent a sleeve 24 from collapsing upon a suction tube 15 during applied suction. EX1007, 3:43-48, FIGs. 2-3; EX1003, ¶¶ 63-65. The discs 17 are spaced apart from each other and form a wave shape. *Id.*

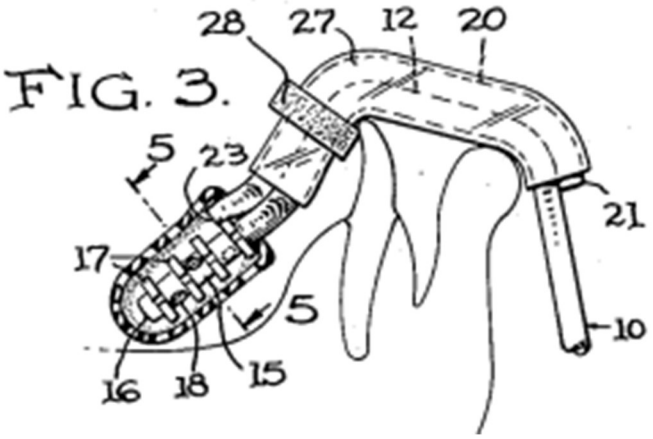

4. **Johnson**

Johnson teaches integral projections 81-86 formed on a flat surface in a dental apparatus. EX1008, 4:16-23, FIG. 3; EX1003, ¶¶ 66-68. Johnson also teaches the use of injection molding for creation of plastic, dental apparatuses as a single piece. EX1008, 5:20-31, 4:5-16; EX1003, ¶ 66.

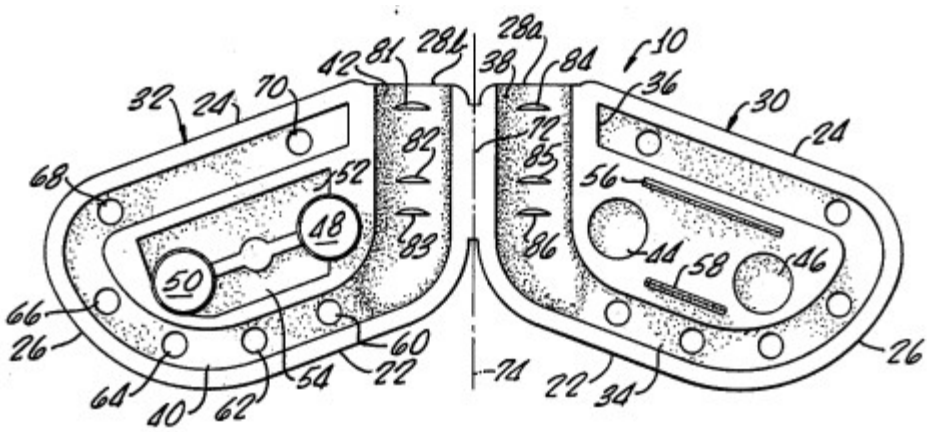

FIG. 3.

5. **Hirsch**

Hirsch also teaches a dental isolation mouthpiece with the same basic shape as the ’969 Patent. EX1001, FIG. 1B; EX1012, FIG. 19A; EX1003, ¶ 69.

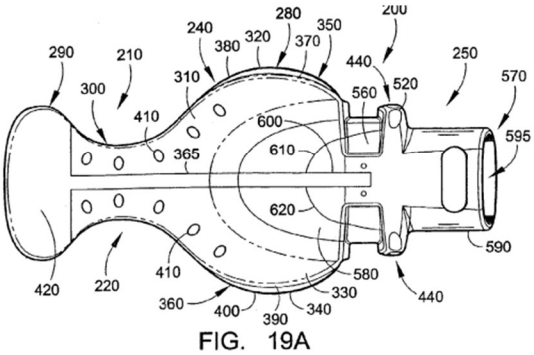

FIG. 19A

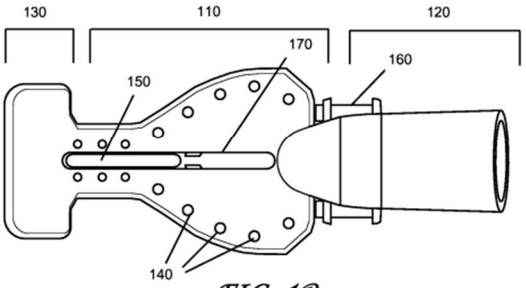

FIG. 1B

Hirsch teaches a dental isolation mouthpiece having a spine formed along a longitudinal axis of the isolation mouthpiece. EX1012, ¶ 78.

VIII. **DISCRETION UNDER § 325(d) and § 314**

Pursuant to the guidance included in the “FAQs for Interim Processes for PTAB Workload Management,” Petitioner omits any preemptive arguments against

discretionary denial. Petitioner will present arguments in an Opposition Brief, should Patent Owner file a Discretionary Denial Brief.

IX. GROUNDS FOR UNPATENTABILITY

Petitioner requests cancellation of the challenged claims on the following Grounds. EX1003, ¶¶ 70-78.

A. Ground 1: Claim 19 is anticipated under 35 U.S.C. § 102(b) by Black or rendered obvious under 35 U.S.C. § 103 by Black

1. Independent Claim 19

a. Limitation 19(a)[3]

Because the claim body fully sets forth the complete claimed structure, and the preamble merely describes an intended use of the dental mouthpiece, the preamble does not instill patentable weight. *Pitney Bowes, Inc. v. Hewlett-Packard Co.*, 182 F.3d 1298, 1305 (Fed. Cir. 1999); *see also Rowe v. Dror*, 112 F.3d 473, 478 (Fed. Cir. 1997); MPEP 2111.02(II); EX1003, ¶ 80.

To the extent the preamble is limiting, Black discloses an intra-oral device 300, which is a dental mouthpiece. EX1005, Abstract ("An intra-oral device includes a tongue shield aspirator, a bite member, a bite grip, and an evacuation tube.") *see also* EX1005, 11:54-60, 4:47-55; EX1003, ¶ 81.

[3] Because Petitioner included the full claim language of the '969 Patent in the Listing of Claims, Petitioner does not reproduce the full claim language here. The Board is encouraged to reference the Listing of Claims to see the full claim language, if necessary.

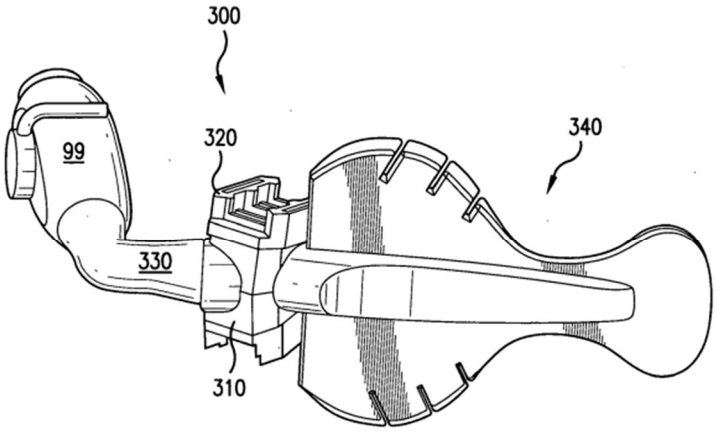

FIG.18

b. **Limitation 19(b)**

Black discloses a tongue shield aspirator 340 configured to retract a patient's tongue. EX1005, 14:1-9. Specifically, Black discloses a first flap 340a connected to a second flap 340b, where the first flap 340a retracts a patient's tongue and the second flap 340b retracts a patient's cheek. EX1005, 14:5-9. The first flap 340a is a main body portion. EX1003, ¶ 82.

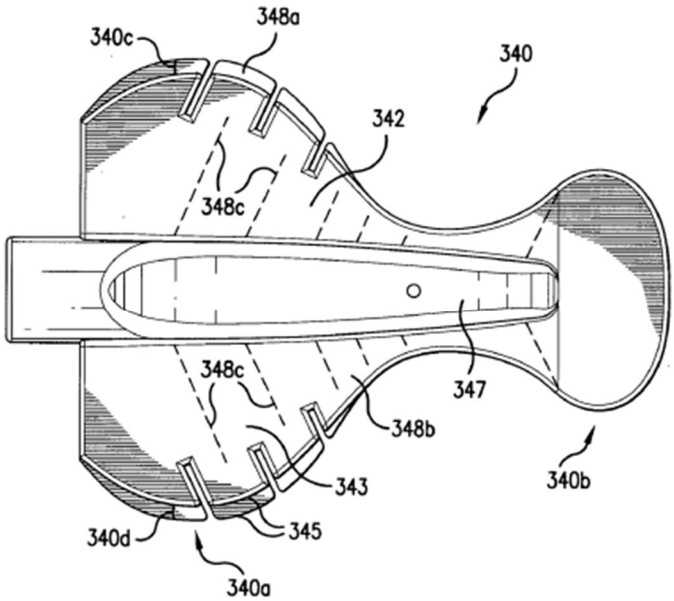

FIG.23A

Black further explains that the first flap 340a comprises a posterior layer 348a and an anterior layer 348b spaced apart from each other by transverse walls 348c. EX1005, 14:25-30. The posterior layer 348a, the anterior layer 348b, and the transverse walls 348c at least partially enclose an interior space, such as channels 342, 343 and a longitudinal lumen that provide conduits for debris and fluid evacuation through the interior space. EX1005, 14:21-63.

Even though Black's mouthpiece is open sided (EX1005, 14:64-15:2), the two layers 348a/b and the connecting wall (wall formed near the neck 346; *See* Section IX.A.1.f) at least partially enclose the channels 343, 342 and a longitudinal lumen, and thus, are a pocket under Patent Owner's construction. Indeed, Patent Owner asserts that Petitioner's open-sided mouthpiece is a "pocket." EX1011, p. 2, 4; EX1003, ¶¶ 83-87.

As will be discussed further below, the first flap 340a (main body) of Black comprises three walls – the posterior layer 348a, the anterior layer 348b, and a sidewall. EX1003, ¶ 87. These three walls at least partially enclose the interior space between the posterior layer 348a and the anterior layer 348b. Thus, according to the claim's definition, Black's main body is formed as a pocket. *Id*.

c. **Limitation 19(c)**

The main body 340a of Black includes a posterior layer 348a, which is a first wall. EX1005, 14:25-30; EX1003, ¶ 88. As shown, the posterior layer 348a has a shape defined by one or more edges along one or more sides. EX1005, FIG. 23B; EX1003, ¶ 88. FIG. 23B shows at least three edges: a superior suction connector edge (left side of FIG. 23B above the neck 346), an inferior suction connector edge (left side of FIG. 23B below the neck 346), and a continuous flap edge defining the inferior and superior sides of the first flap. EX1005, 14:43-47, 14:64-15:20, FIG. 23B. EX1003, ¶ 89.

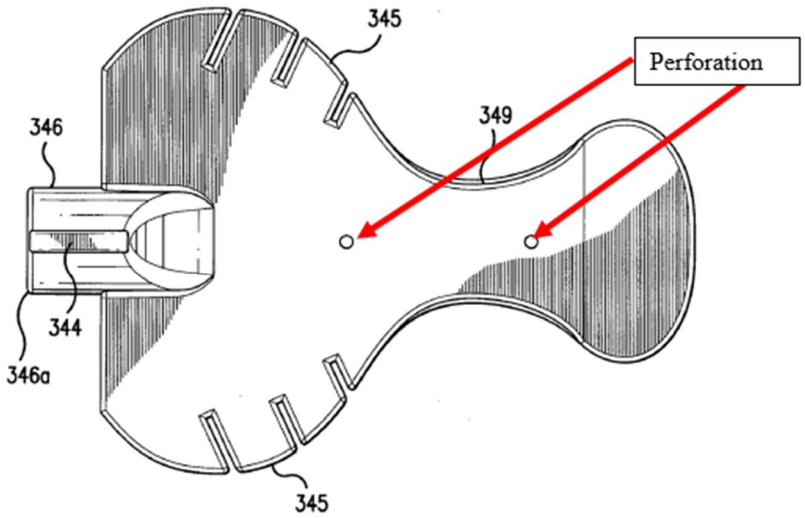

FIG.23B

The posterior layer 348a includes two perforations shown in FIG. 23B; EX1003, ¶¶ 89-91. According to the inventor, these circles are perforations. *Id*.

d. **Limitation 19(d)**

The main body 340a of Black includes an anterior layer 348b, which is a second wall. EX1005, 14:25-30; EX1003, ¶ 92. As shown, the anterior layer 348b has a shape defined by one or more edges along one or more sides. EX1003, ¶ 92.

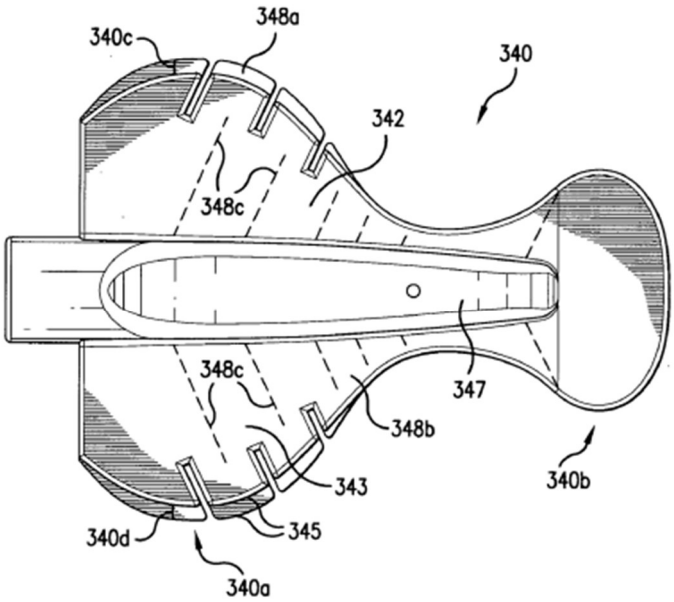

FIG.23A

Also, the posterior layer 348a corresponds in shape to the anterior layer 348b, as shown in FIG. 23A. EX1003, ¶ 93. The anterior layer 348a matches the shape of the posterior layer 348a and is very similar in size. Thus, the anterior layer corresponds to the shape of the posterior layer. EX1003, ¶ 93-94.

Black explains that the posterior layer 348a has a profile that extends beyond the profile of the anterior flap 348b, which can be seen in FIG. 23A. EX1005, 15:57-63. Patent Owner's infringement contentions show alleged infringement of a mouthpiece having a lower flap that is far more different in size and shape than what Black shows. EX1011, p. 4-5. Thus, according to Patent Owner, two walls do not need to be identical in shape or size to have "corresponding edges along one or more corresponding sides." Thus, according to Patent Owner's construction, Black's

anterior layer and posterior layer having corresponding edges along corresponding sides and correspond in shape. EX1003, ¶ 94.

Regardless, to the extent the anterior and posterior layers 348a/b must be identical in shape and size to have "one or more corresponding edges along one or more corresponding sides," Black discloses several embodiments having identical anterior and posterior layers. EX1005, FIGs. 1, 3B, 4C, 13. To the extent obviousness is required here, combining features between embodiments within the same reference "does not require a leap of inventiveness." *Boston Scientific Scimed, Inc. v. Cordis Corp*., 554 F.3d 982, 991 (Fed. Cir. 2009); EX1003, ¶¶ 95-96. Moreover, changes in the size and shape of the posterior wall are obvious. MPEP 2144.04(IV)(A)-(B). As such, to the extent "corresponds to" is construed to mean "identical to," it would have been obvious to resize and shape the posterior layer 348a to be identical to the anterior layer 348b in view of Black's other embodiments. EX1005, FIGs. 1, 3B, 4C, 13

e. **Limitation 19(e)**

Black teaches transverse walls 348c spaced apart from each other to form channels 342 therebetween. EX1005, 14:21-47. Black explains that these transverse walls form conduits for debris and fluid, "thereby allowing for simultaneous aspiration of debris and fluid from top (palate of mouth) to bottom (floor of mouth), and through the passageway, during dental procedures." EX1005, 14:38-47. The

transverse walls 348c are a bridge structure, as claimed. EX1015, pp. 51-52; EX1003, ¶¶ 97-98, 103. Indeed, the Examiner also found that Black taught the claimed bridge structure. *Id.*

More specifically, the transverse walls extend from an interior surface of the posterior flap 348a and extend up to the anterior flap 348b as a plurality of protrusions (Transverse walls shown dashed). EX1005, 14:21-47; EX1003, ¶¶ 97-98. These transverse walls 348a extend from an interior surface of the anterior flap 348b and are integral to the anterior flap 348b. EX1005, 14:25-30.

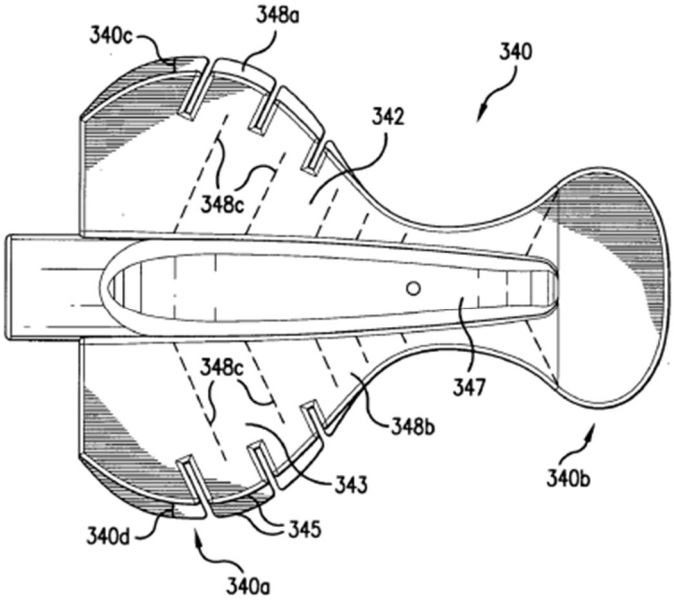

FIG.23A

The transverse walls 348c extend toward the posterior layer 348a from the interior surface of the anterior flap 348b and connect to the posterior flap 348a. EX1005, 14:21-63; EX1003, ¶ 102. The transverse walls 348c form crests in a wave shape and the channels 342 form troughs in a wave shape. EX1003, ¶¶ 97-101.

Annotated FIG. 23C shown below illustrates the square wave shape formed by the presence of absence of the transverse walls. EX1003, ¶ 99.

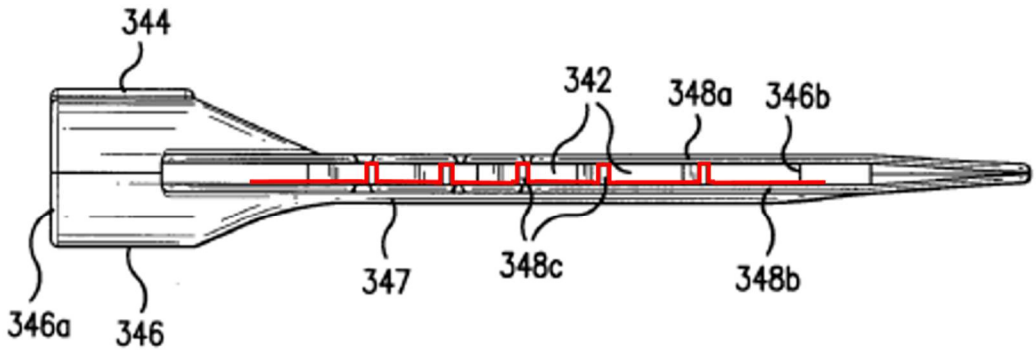

FIG.23C

FIG. 3B also illustrates the wave shape from a top-view.

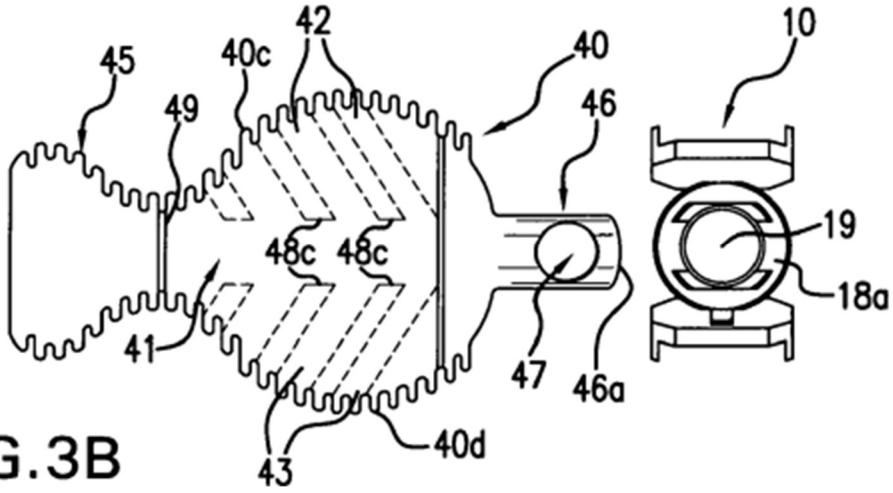

FIG.3B

Elements 42 and 43 illustrate the channels, or troughs, and element 48c illustrates the crests. EX1003, ¶¶ 99-101. While FIG. 3B is directed to a different embodiment than the embodiment shown in FIGs. 23A-C, Black explains that "the tongue shield aspirator 340 includes features that are similar to those described above with the tongue shield aspirators 40, 240 shown in FIGs. 3, 4." EX1005,

11:55-60, 14:2-5. Moreover, the embodiment of FIG. 23 also includes transverse walls and channels. EX1005, 14:21-47. Thus, FIG. 3B further informs the structure of the tongue shield aspirator 340. EX1003, ¶ 100. Nevertheless, to the extent obviousness is required here, combining features between the embodiments within the same reference "does not require a leap of inventiveness." *Boston*, 554 F.3d at 991; EX1003, ¶ 100.

While this feature seemingly was found to be the point of novelty, Petitioner notes that during prosecution of the parent application, the same Examiner found that limitation 19(e) was taught by Black. EX1015, pp. 51-52.

f. **Limitation 19(f)**

Black teaches a connecting wall that connects one or more edges of the posterior layer 348a to one or more edges of the anterior layer 348b across a span between to the two layers. EX1003, ¶ 104.

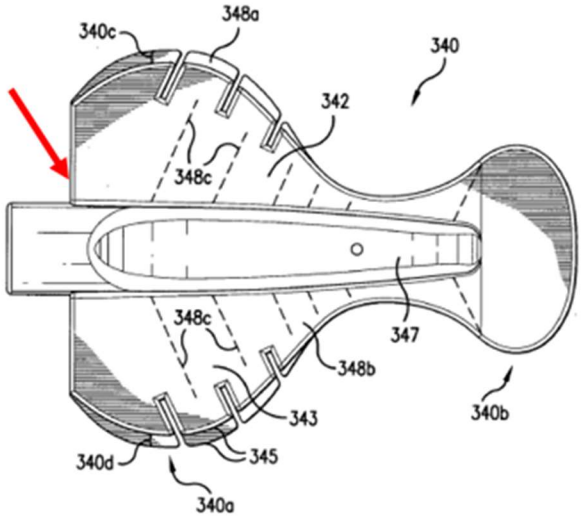

FIG.23A

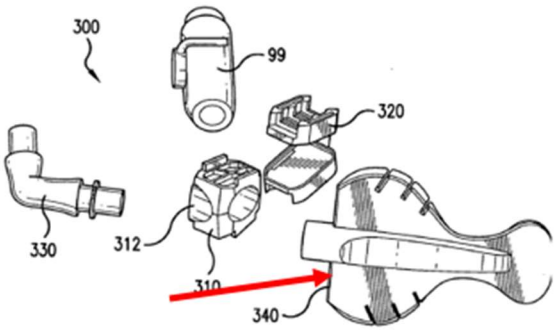

FIG.19

To the extent Patent Owner attempts to argue that the tongue aspirator 340 fails to disclose a connecting wall, such argument fails at least for the reason that the inventor of Black testified that such a connecting wall is present in the tongue aspirator 340. EX1003, ¶¶ 105-107. Regardless, figures from other "substantially similar" embodiments clearly show a connecting wall. EX1005, 11:55-60, 14:2-5.

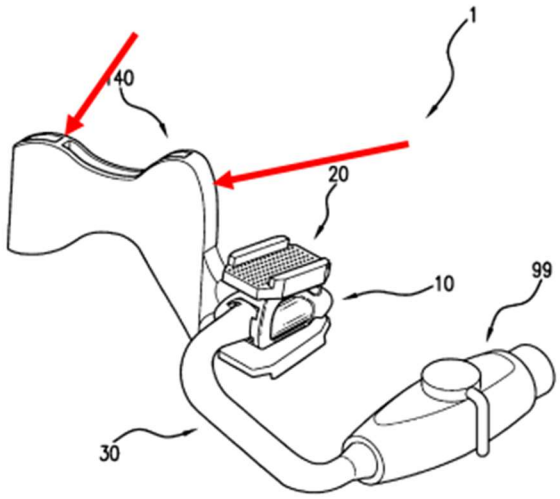

FIG. 1

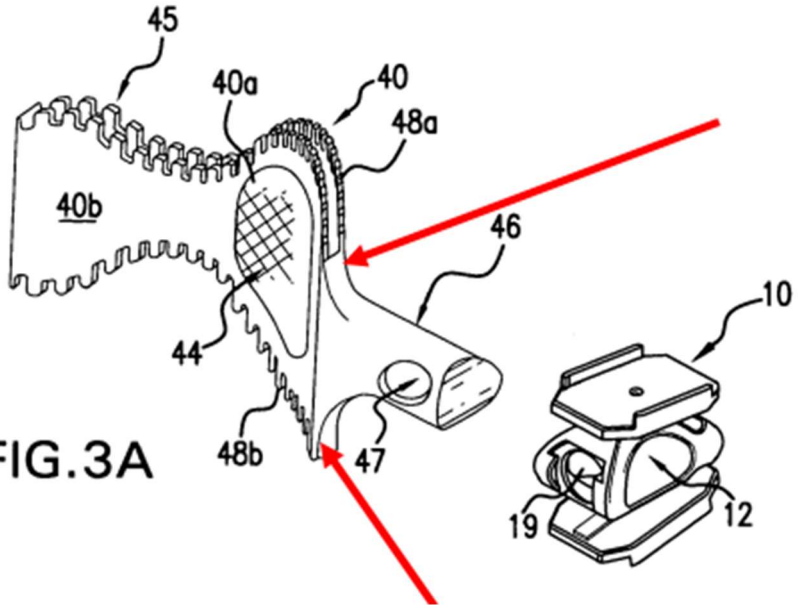

FIG.3A

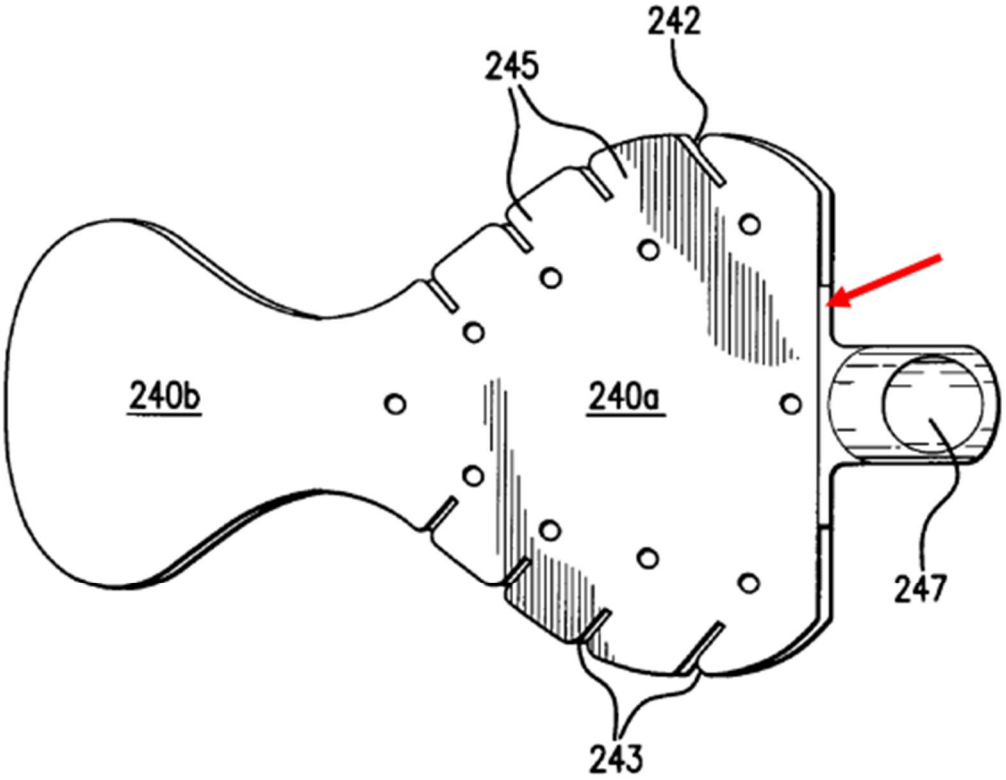

FIG.4C

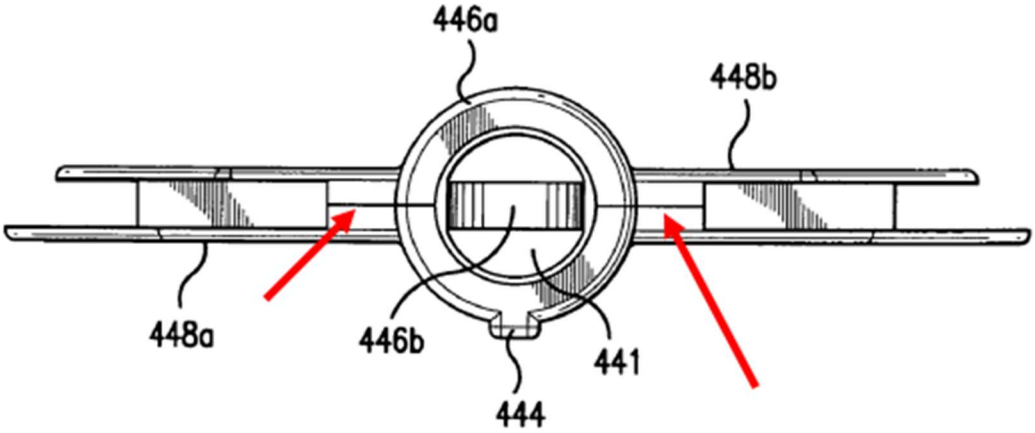

FIG.24D

As can be seen from multiple embodiments above, Black teaches a connecting wall that connects one or more edges of the posterior layer to one or more edges of the anterior layer across the span between the two layers. EX1003, ¶¶ 105-107. According to Black, all of these embodiments are "substantially similar." EX1005, 16:17-19, 14:2-5, 11:55-60, 6:53-60.

To the extent Patent Owner argues that the tongue aspirator 340 lacks the connecting wall that is present in almost every other embodiment of Black, combining features between the embodiments of a single reference "does not require a leap of inventiveness." *Boston*, 554 F.3d at 991; EX1003, ¶ 106. Moreover, it would have been obvious to include the connecting wall shown in, for example, FIG. 4C in the embodiment shown in tongue shield aspirator 340 to provide additional structural integrity for the tongue shield aspirator. EX1003, ¶ 105.

Finally, to the extent Patent Owner argues that any of the above embodiments do not show a connecting wall formed across an entire "edge," and only partially extends across an edge, it would have been obvious to widen the connecting wall disclosed by Black as such changes would simply be a change in size/proportion. MPEP 2144.04(IV)(A). This change is particularly true when other embodiments, such as FIG 1 and FIG. 3A show a connecting wall spanning the entire end of the mouthpiece. EX1005, FIGs. 1, 3A. Moreover, the plain language of claim 19 lacks any recitation of "entire" edges, so any such argument finds no basis in the claim language.

g. **Limitation 19(g)**

Black teaches a hollow neck 346 that connects the channels of the tongue shield aspirator to an evacuation tube that connects to an HVE valve (vacuum source). EX1005, 15:21-51; 16:1-3. The hollow neck 346 is formed at the first end of the tongue shield aspirator 340. EX1003, ¶ 108.

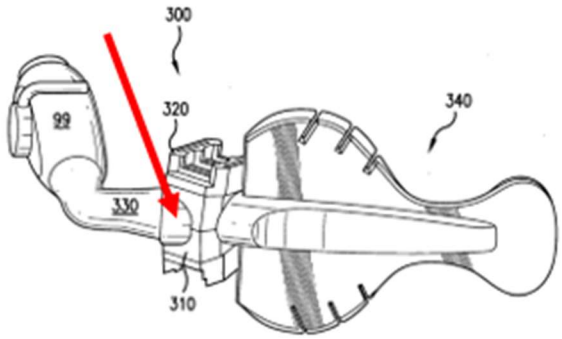

FIG.18

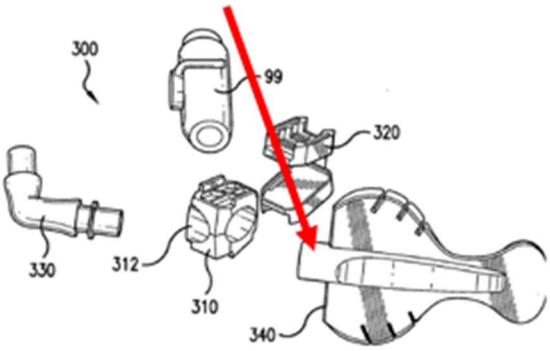

FIG.19

h. **Limitation 19(h)**

Black teaches a cheek retractor 340b formed at the end opposite the evacuation tube. EX1005, 14:5-9; EX1003, ¶ 109.

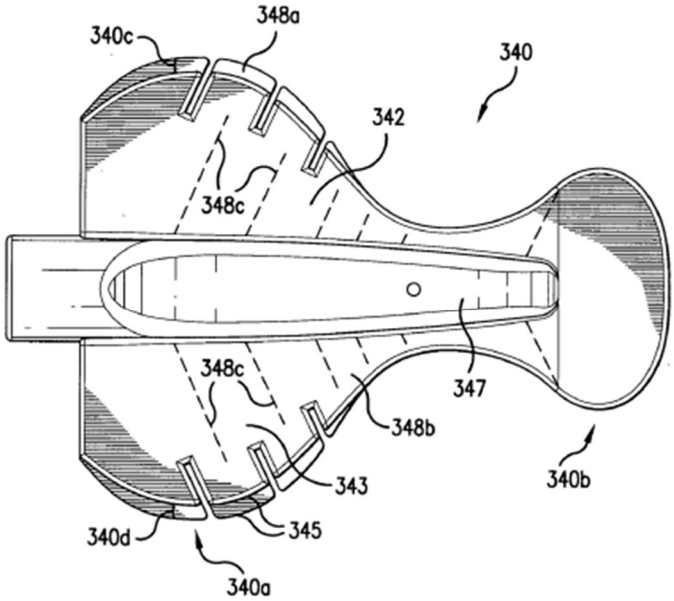

FIG.23A

Thus, Black alone teaches all of the limitations of claim 19. To the extent any combination of embodiments is required, then the claims are obvious in view of the embodiments of Black, which are easily combinable if not already combined as taught by the specification. EX1005, 16:17-19, 14:2-5, 11:55-60, 6:53-60; EX1003, ¶ 79, 110.

B. Ground 2: Claims 1-4, 6-9, 11-12, 14, and 16-19 are obvious under 35 U.S.C. § 103 by Park in view of Baughan

1. Independent Claim 1

a. Limitation 1(a)

Park discloses a mouth prop 100, which is a dental mouthpiece. EX1006, ¶¶ 25-26; EX1003, ¶ 112.

b. **Limitation 1(b)**

Park discloses a tongue retraction portion 130, which is a main body. EX1006, ¶ 26; EX1003, ¶ 113. The tongue retraction portion 130 includes a plurality of through holes 132, which are perforations. EX1006, ¶ 31; FIG. 3; EX1003, ¶ 114.

The tongue retraction portion 130 is configured as a pocket defining an interior space. EX1006, ¶ 26; EX1003, ¶¶ 115. In fact, the tongue retraction portion 130 is a four-sided body with an anterior wall, a posterior wall, and two sidewalls that together enclose an interior open space where suction occurs. EX1006, FIG. 2; EX1003, ¶ 115; *See also* Section IX.B.1.d-f.

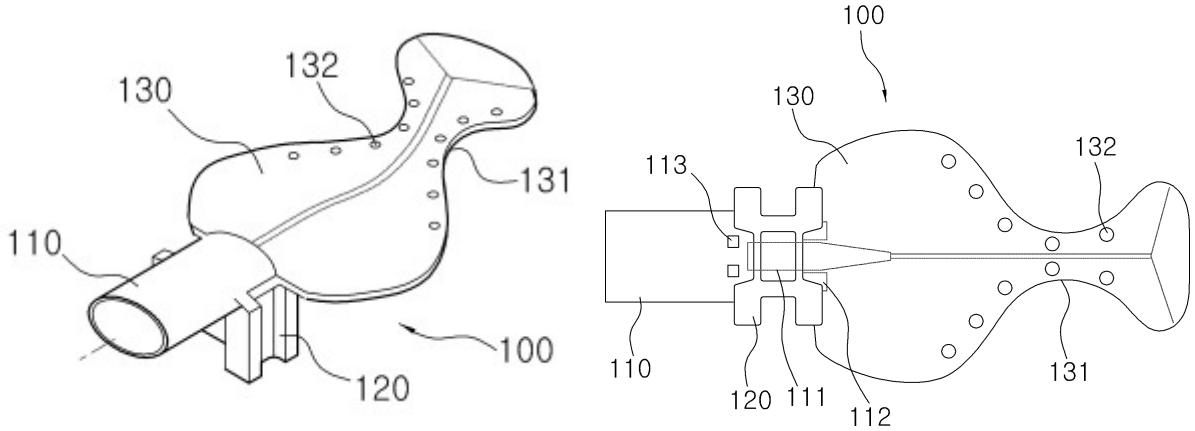

A PHOSITA would recognize Park as an enclosed mouthpiece with sidewalls from FIGs. 1-3 of Park. EX1003, ¶¶ 115-120. FIG. 2 even illustrates the sidewalls extending into the insertion port 110, thereby clearly demonstrating their presence. EX1003, ¶¶ 115-120.

The specification further supports this conclusion. As shown in FIG. 3, the mouth prop 100 includes two suction ports 112 formed in the hollow insertion port

110 and extending into the tongue retraction portion 130. EX1006, FIG. 3, ¶¶ 27-28; EX1003, ¶¶ 121-123. Park teaches that the insertion port 110 is hollow and only *one* end of the insertion port 110 is open. EX1006, ¶ 27-28. Park further teaches that the insertion port 110 has a central interior that includes a post fitting groove 111 and suction ports 112. *Id.* Because only one end of the insertion port 110 is open, Park teaches that the second end, where the suction ports 112 are formed (see EX1006, FIG. 2), is enclosed and extends into an interior space of the tongue retraction portion 130. EX1006, ¶ 26-31. Indeed, Park specifically teaches that the tongue retraction portion 130 extends from the insertion port 110. EX1006, ¶ 26.

The suction ports 112 only extend partially into the main body 130, and the suction ports 112 do not extend to the through-holes 132 as a dedicated channel. EX1006, ¶ 26-31, FIG. 3; EX1003, ¶ 120. Additionally, Park fails to teach that any suction can occur through the sides of the mouth prop 100. EX1003, ¶ 123. Thus, a PHOSITA would understand that Park's mouth prop 100 has an interior open space that fluidly connects the holes 132 to the suction ports 112. EX1006, ¶¶ 30-31, FIG. 2; EX1003, ¶ 124. If the mouth prop 100 did not include an interior open space formed in the tongue portion 130, then the holes 132 would serve no purpose, and the suction ports 112 would aspirate nothing. EX1003, ¶ 119. The existence of an interior chamber of the mouth prop is necessary to fluidly connect the suction ports

112 and the holes 132; otherwise Park would be inoperable to perform "suction of foreign substances in the oral cavity." EX1006, ¶ 10.

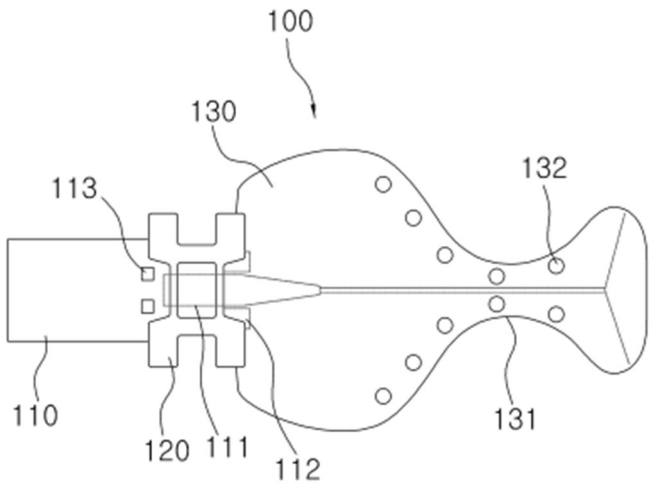

Indeed, a PHOSITA would know that a mouth prop having through holes 132 that do not fluidly connect to the suction ports 112 would allow debris and fluid to pass through the through holes 132 and down a patient's throat, something a PHOSITA would know to avoid. EX1019, 4:16-21; EX1003, ¶ 119. If the suction connector 112 was not fluidly connected to the holes 132 through the body 130 of the mouth prop 100, the suction port 112 would serve no purpose or be extremely ineffective, and a patient might choke or experience severe discomfort by the debris, fluid, etc. passing through the holes 132 during a dental procedure. EX1003, ¶¶ 119-120.

Moreover, a PHOSITA would know that a dentist would position the mouth prop 100 in a patient's mouth such that the concave area 131 would wrap behind

teeth on the side of the mouth where a dentist would operate. EX1006, ¶ 47, 31. FIG. 6; EX1003, ¶¶ 117-118; EX1016, 2:13-20, FIG. 2. This is because the whale tale end, opposite the suction connector 112, retracts the patient's cheek near a dental operation. EX1006, ¶ 31. If the through-holes 132 were not fluidly connected to the suction ports 112 through the body 130, then the suction ports 112 of the mouth prop 100 of Park would be positioned at the furthest possible location in the mouth from the dental operation. EX1003, ¶ 119. A PHOSITA would know that suction should occur as close as possible to the operating area to maximize capture of debris, fluids, and aerosols. *Id*. The farther away suction is positioned from generated fluid, debris, blood, etc., the less powerful it becomes; meaning the suction would not effectively aspirate unwanted fluids and debris in the mouth. *Id.* In other words, a PHOSITA would understand that the mouth prop of Park fluidly connects the suction ports 112 to the holes 132 through an inner chamber of the tongue retraction portion 130 to guide and channel the suction applied through the suction ports. EX1003, ¶ 120. A PHOSITA would understand that the only logical reason a mouth prop configured to expel debris and fluid (EX1006, ¶ 28, 9) would include through holes 132 is to ensure that suction occurs through the holes 132 via a fluid connection with the suction ports 112, especially considering the holes 132 align with the location where a dental operation occurs. EX1003, ¶124. The only way the holes 132 would have an efficient fluid connection with the suction ports 112 is if the mouth prop 100

included an inner chamber through the mouth prop. *Id*. Thus, Park, at worst, implicitly teaches a four-sided mouth prop formed as a pocket with an inner chamber formed between the four walls. *Id*.

Thus, Park teaches a main body 130 having a plurality of perforations 132, and the main body 130 has an interior open space formed in the main body 130 between the suction ports 112 and the holes 132. *Id*.

a. **Limitation 1(c)**

As shown in FIG. 3, the main body 130 of Park has a first end that is narrower than the second end. EX1006, FIG. 3 (annotated). EX1003, ¶ 125.

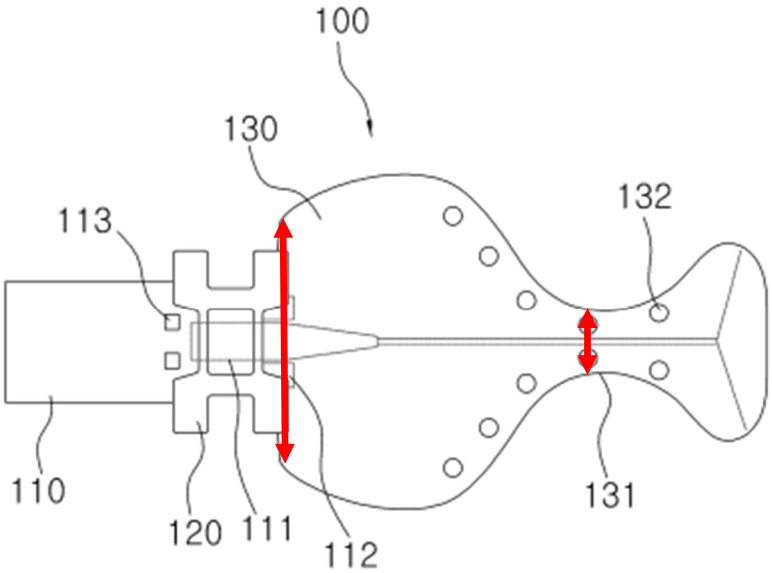

b. **Limitation 1(d)**

The main body 130 of Park has a first wall having a shape defined by an exterior edge, and the first wall has multiple holes 132, at least one of which is an

opening into the interior chamber of the main body 130. EX1006, FIG. 2; EX1003, ¶¶ 126-127.

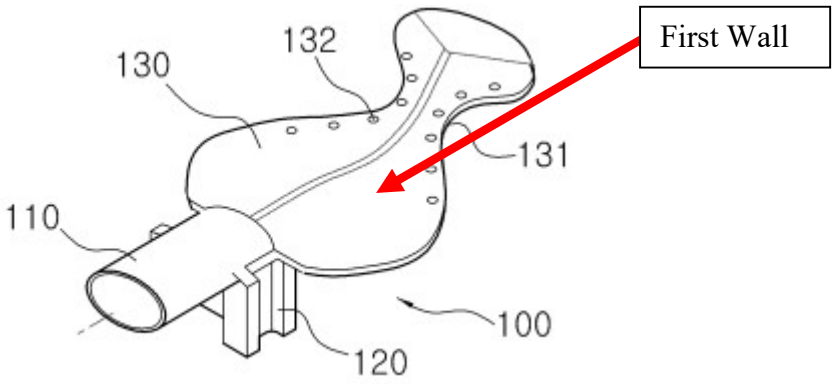

c. **Limitation 1(e)**

The main body 130 of Park has a second wall that is exactly the same shape as the first wall. EX1006, FIG. 2-3; EX1003, ¶¶ 128-129.

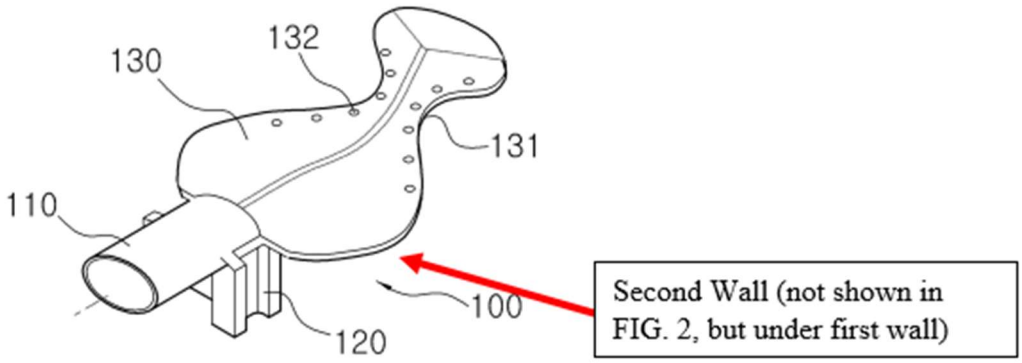

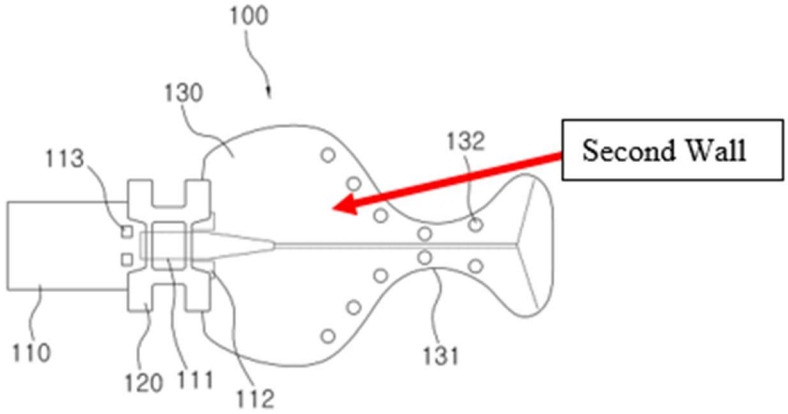

d. **Limitation 1(f)**

The main body 130 of Park has a sidewall connecting the anterior wall and the posterior wall. EX1006, FIG. 2; EX1003, ¶ 130.

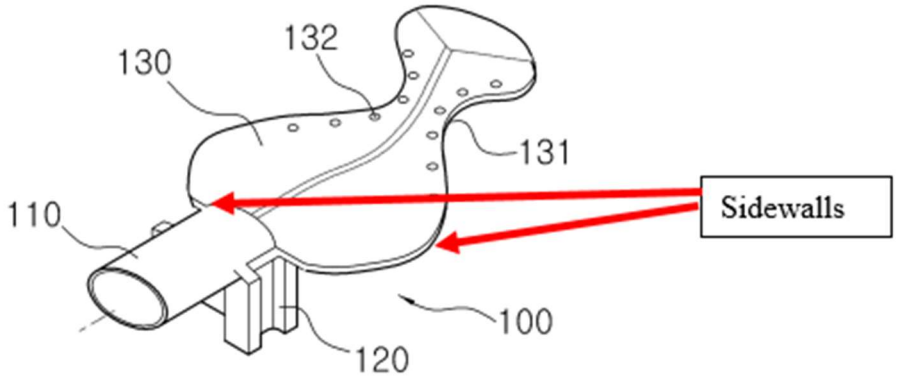

e. **Limitation 1(g)**

Park is silent regarding whether any structures are formed inside the interior chamber of the main body, which may be intentional as Park mentions that "common features," such as anti-collapse structures, are "omitted." EX1006, ¶ 22. However, a PHOSITA would understand that when suction is applied through the suction port 112, the first wall and the second wall are likely to collapse under the suction force. EX1007, 3:46-48. This collapsing would occur because Park teaches that the mouth prop comprises a flexible material, such as silicone. EX1006, ¶32, 34. The sidewalls and the insertion part 111 would help resist this collapsing force, but a PHOSITA would understand that additional anti-collapsing structure would assist at the weakest areas of the mouth prop 130. EX1003, ¶¶ 131-133.

More specifically, an area of the mouth prop furthest from a rigid structure, such as the sidewall, the socket 111, or the insertion port 110 would be most likely to collapse under suction. EX1003, ¶ 133. A PHOSITA would understand that these areas, depicted below, are the most likely areas to collapse under suction due to their location and distance from rigid structure. *Id*.

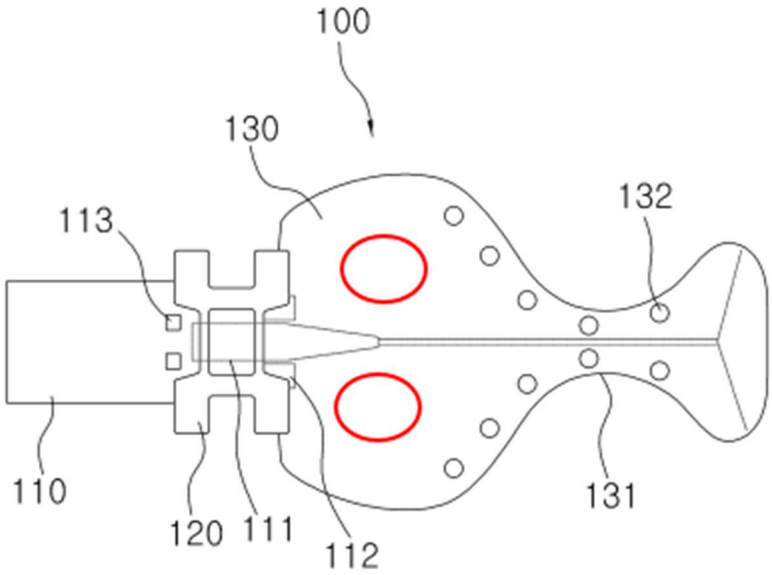

If these areas collapse under suction, suction power would be significantly reduced or blocked entirely. EX1003, ¶ 135. Thus, a PHOSITA would have been motivated to add anti-collapsing structure to prevent collapse. *Id*.

Moreover, it is unclear whether the mouth prop 100 includes a spine or other rigid structure running through the middle of the mouth prop 100. EX1003, ¶ 134. FIG. 3 of Park suggest that something is running from the socket 111 toward the cheek retractor end of the mouth prop. EX1006, FIG. 3.

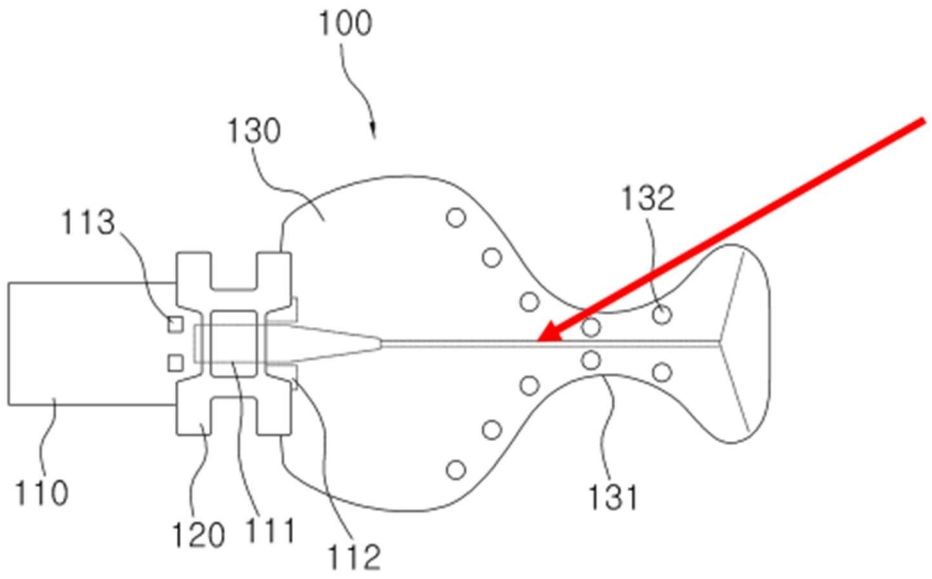

However, this line is not shown in FIG. 6.

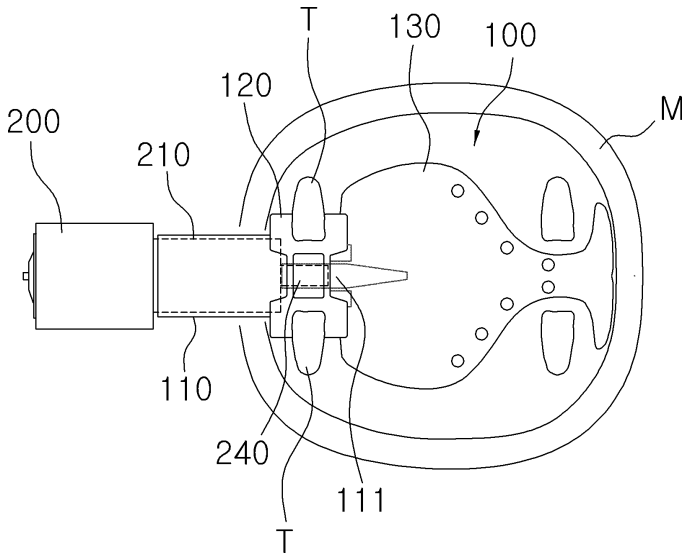

Thus, the line shown in FIG. 3 may not provide any rigidity or anti-collapse features at all and may only assist in guiding light from the light guide 240. EX1006, ¶ 39; EX1003, ¶ 134. Thus, the weakest part of the mouth prop may actually be the exact center of the mouth prop (see annotated FIG. 6 below).

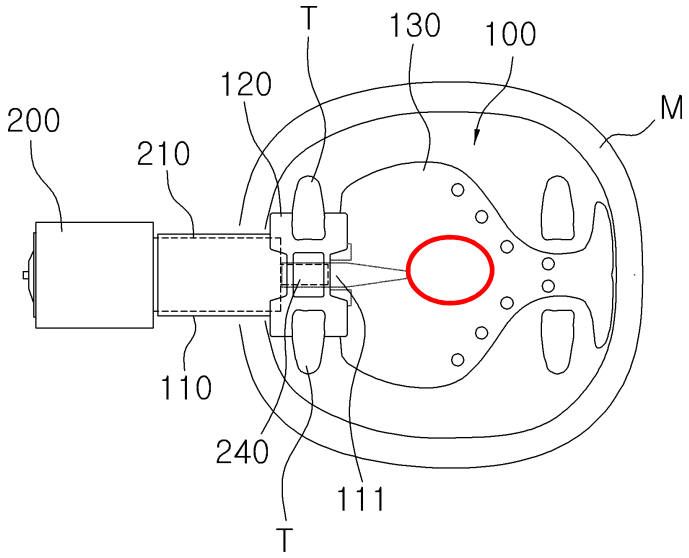

Regardless, a PHOSITA would know that Park is weak in at least one area and may collapse or restrict fluid communication due to wall collapse caused by suction due to the flexible material comprising the mouth prop 100. EX1006, ¶ 32; EX1003, ¶ 135. To prevent collapse or restriction, a PHOSITA would have been motivated to add mechanical elements that prevent collapse under suction. EX1003, ¶ 135; EX1007, 3:46-48.

Baughan teaches such a mechanical element that prevents collapse under suction. EX1007, 3:43-48. Specifically, Baughan teaches three projecting discs 17 that prevent collapse under suction when a sleeve is inserted over a tube 15. EX1007, 2:19-25, 2:51-55, 3:43-48. The discs 17 project outward from the tube, span the distance between the tube and the sleeve, and engage the sleeve. *Id.* These rigid structures, spaced apart from each other, prevent the sleeve from collapsing under suction. *Id.* Baughan teaches that the projecting discs 17 are secured to the tube 15

but the discs 17 are not attached to the sleeve 24, as they merely contact the sleeve or the sleeve rests upon the discs. EX1007, 2:19-25, 2:51-61; EX1003, ¶ 136. Thus, Baughan teaches projecting discs connected to and protruding from one structure (the tube 15) but not attached to another structure (the sleeve 24).

While Baughan teaches outward projecting discs, a PHOSITA using basic common sense, would modify the discs 17 for a tube-shaped embodiment to be projections for a flatter, non-tube embodiment. EX1003, ¶ 137; EX1008, FIG. 3. Indeed, it was well known in the art how to make projections on a flat surface. EX1008, FIG. 3, 4:16-23; EX1003, ¶¶ 137-138. Johnson further teaches that the projections are molded projections, which means the projections are integral with an interior surface on which they were formed. *Id.* Even so, making something integral is an obvious design choice. MPEP 2144.04(V)(B).

Applying the simple teachings of Baughan and Johnson to Park, it would have been obvious to include a plurality of spaced-apart projections formed on the posterior wall of Park to prevent collapsing of the posterior and anterior walls under suction at weak points of the mouth prop. EX1003, ¶ 139. A PHOSITA would have expected success because these simple mechanical structures ensure separation between two walls that would otherwise collapse under suction. EX1007, 3:43-48. Moreover, Black taught this same concept but with an "open" mouthpiece lacking sidewalls. *See* Section IX.A.1.e. Park opted for sidewalls, but the concept of using

perpendicularly projecting structures to prevent collapse of parallel walls under suction was demonstrated by Black and by Baughan. EX1005, 5:45-59; EX1007, 3:43-48. Thus, a PHOSITA would have expected success in using spaced-apart projections to prevent walls from collapsing under suction. EX1003, ¶ 140. A PHOSITA would have further known that spaced-apart projections ensure that channels for sucking saliva and foreign substances remain between the spaced-apart projections, lest the purpose of Park's mouth prop be defeated. EX1003, ¶ 140; EX1007, 3:36-48; EX1005, Abstract. Modifying Park in view of The combination of Baughan and/or Johnson would involve nothing more than applying a known technique (anti-collapse structure) to a known device ready for improvement (the mouth prop 100 of Park) to yield predictable results (preventing collapse at weak parts of the mouth prop 100 under suction), or combining prior art elements (a mouth prop having an interior chamber) according to known methods (using spaced-apart projections to prevent collapse under suction) to yield predictable results (the projections would prevent collapse under suction and still allow for suction channels therebetween). EX1003, ¶ 140.

The spaced-apart projections taught by Baughan could be formed on either the first wall or the second wall. A PHOSITA would know that it makes no difference which wall connects to the projections so long as the projections connect to one of the walls. EX1003, ¶ 141; EX1007, FIG. 3

Park in view of Baughan and Johnson would predictably result in multiple projections formed at the weakest point(s) of Park 111. *See* annotated EX1006, FIG. 3 below; EX1003, ¶ 142.

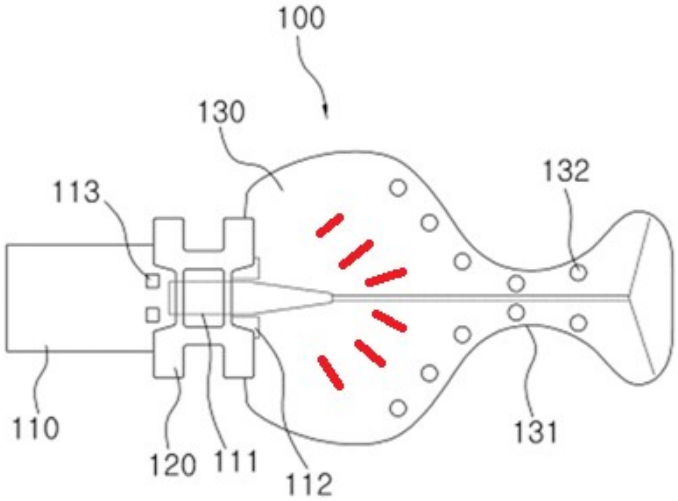

A PHOSITA would know that the projections could be formed at any angle, but angling the projections/troughs toward the holes would create an efficient convergent flow. EX1005, 8:21-39; EX1003, ¶ 139.

To the extent Patent Owner argues that the discs of Baughan are not "integral," it would have been obvious to integrally form projections in view of Park or Johnson. EX1003, ¶ 137. Park teaches a silicone material that comprises the mouth prop 100. EX1006, ¶ 32. Adding integral projections would have been obvious in view of common knowledge in injection molding. EX1003, ¶ 137. Alternatively, it would have been obvious to add projections integrally in view of Johnson. Johnson teaches

a plurality of integrally formed projections formed on an inner surface of a dental apparatus. EX1008, 4:16-23; MPEP 2144.04(V)(B).

Thus, Park in view of Baughan and Johnson teaches limitation 1(g). EX1003, ¶ 142.

f. **Limitation 1(h)**

Baughan teaches that the spaced-apart discs result in a square wave shape having crests and troughs. EX1007, FIG. 3 (annotated below); EX1003, ¶ 143.

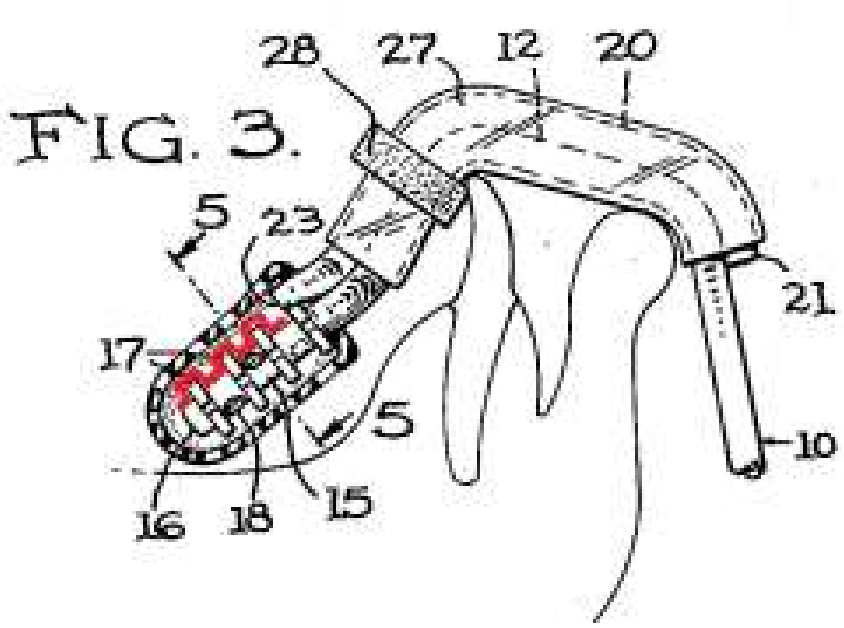

In fact, each individual disc 17 is formed in a wave shape with notches 19 formed in each disc so that saliva "will always be able to pass through." EX1007, 3:40-43. In fact, the notches 19 formed in each disc are described in the same way as the bridge structure of the '969 Patent. EX1007, 3:40-43.; EX1001, 4:59-63. As shown below, the notches 19 in the disc also form a square wave shape. EX1007, FIG. 5 (annotated); EX1003, ¶¶ 64-65.

FIG. 5.

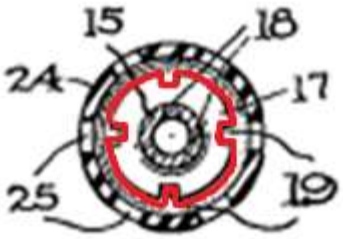

Furthermore, as shown in FIGs. 1-3 of Park, the span between two walls of Park is less than the width of the first wall. Indeed, the mouth prop 100 is thinner than it is wide. EX1006, FIG. 2; EX1003, ¶ 144.

g. **Limitation 1(i)**

As explained above, the four walls of the mouth prop of Park form the interior space. Section IX.B.1.b. Thus, the shape of the interior open space within the mouth prop of Park spans between the defined shape of the first wall and a corresponding shape of the second wall. EX1006, FIG. 1-3; EX1003, ¶ 145.

h. **Limitation 1(j)**

Park teaches a concave area 131 (transition section) at the first end of the main body 130 that flexibly connects to a cheek retractor. EX1006, ¶ 31. Park illustrates that the concave area 132 includes holes 132. EX1006, FIG. 3; EX1003, ¶¶ 146-147.

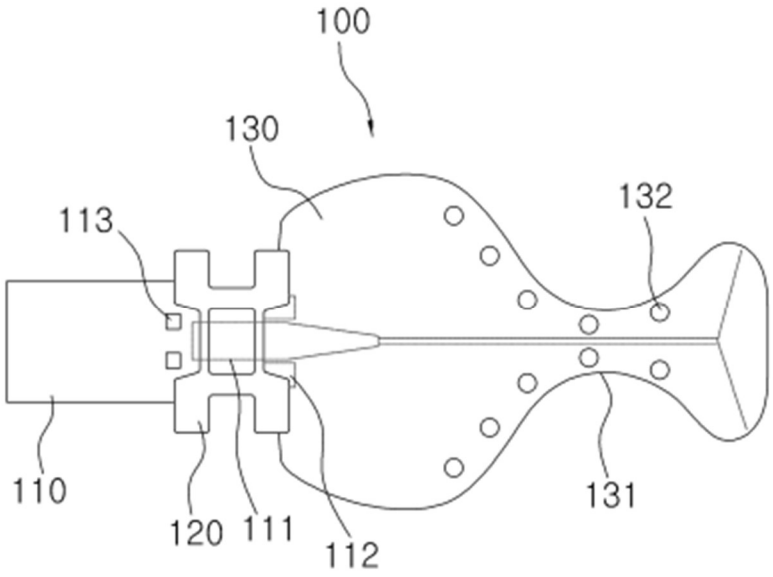

Thus, Park in view of Baughan and Johnson teaches all of the limitations of claim 1. EX1003, ¶ 111.

2. **Claim 2**

Park teaches that the holes 132 are spaced apart to form a mesh, according to the definition of a mesh in the ’969 Patent (a plurality of holes placed close to each other). EX1001, 4:8-11, FIG. 4; EX1006 ¶ 31, FIG. 3; EX1003, ¶ 148-149.

3. **Claim 3**

Park shows that the holes 132 are placed on both the front wall and the back wall. EX1006, ¶ 31, FIG. 2-3; EX1003, ¶ 150.

4. **Claim 4**

See Sections IX.B.2-3; EX1003, ¶ 151.

5. **Claim 6**

Park teaches a suction connector 110 that suctions foreign materials and connects to a vacuum source. EX1006 ¶¶ 26-28; EX1003, ¶ 152. The suction connector 110 suctions through the ports 112 and through the holes 132 via the inner chamber. *Id.*; *See* Section IX.B.1.

6. **Claim 7**

Baughan teaches a plurality of spaced contact points at the edges of the discs 17 that keep walls separated under suction. EX1007, 2:19-35, 2:51-62; EX1003, ¶ 153. Park as modified by Baughan and Johnson would include spaced apart contact points that prevent collapse and keep the first wall separated from the second wall under suction. EX1003, ¶ 153.

7. **Claim 8**

Baughan teaches spaced apart discs 17 that would allow for fluids therethrough due to being spaced apart. EX1007, 2:19-35, 2:51-62; EX1003, ¶ 154. as modified by Baughan and Johnson would include spaced apart contact points with spaces therebetween to allow for fluids to pass through during suction. EX1003, ¶ 154.

8. **Claim 9**

Park teaches that the cheek retractor portion keeps tissue away from an area of work when bent. EX1006, ¶ 31. Park further teaches that the mouth prop comprises a flexible material. EX1006, ¶ 32. Thus, Park teaches that the cheek

retractor's pressure is based on the mouth prop material's (silicone) resilience. EX1003, ¶ 155

9. **Claim 11**

Park teaches a mouth prop formed as one piece. EX1006, ¶ 32. A PHOSITA would know that forming silicone is commonly performed using injection molding. EX1003, ¶¶ 156-157; EX1008, 5:20-22 (teaching that plastic can be formed using injection molding).

10. **Claim 12**

Park teaches a mouth prop formed of silicone that is reusable after sterilization. EX1006, ¶ 32, Abstract. Park further teaches the mouth prop 100 as transparent. EX1006, ¶ 49; EX1003, ¶ 158.

11. **Claim 13**

As described above, Park as modified by Baughan and Johnson would include multiple projections extending upward from the posterior wall of Park. *See* Section IX.B.1.g-h. The projections would increase the thickness of the posterior wall at the location of the projections, and the posterior wall would be thicker than the anterior wall as a result. EX1003, ¶ 159.

12. **Claim 14**

Park teaches a tooth support section 120, which is a mouth prop, formed into one piece with the rest of the mouth prop 100. EX1006, ¶ 29, 32, 54, Abstract, FIG. 1-3. A PHOSITA would know that forming silicone is performed using injection

molding. EX1003, ¶ 160; EX1008, 5:20-22 (teaching that plastic can be formed using injection molding).

13. **Claim 16**

a. **Limitation 16(a)**

See Section IX.B.1.a.; EX1003, ¶ 161.

b. **Limitation 16(b)**

See Section IX.B.9 and Section IX.B.1.j.; EX1003, ¶ 162.

c. **Limitation 16(c)**

See Section IX.B.1.b. As shown in FIG. 3 of Park, the cheek retractor is connected to an end of tongue retraction portion 130 opposite the insertion port 110. EX1003, ¶ 163-164.

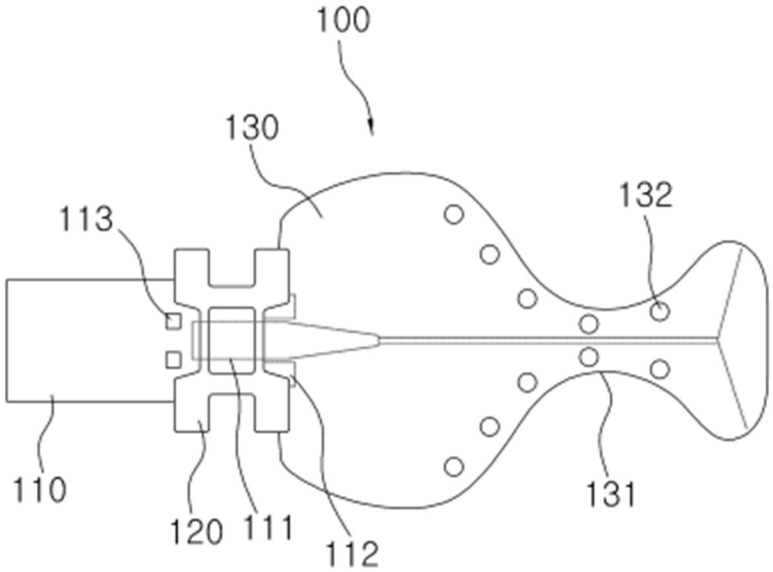

d. **Limitation 16(d)**

See Section IX.B.1.d; EX1003, ¶ 165.

e. **Limitation 16(e)**

See Section IX.B.1.e; EX1003, ¶ 166.

f. **Limitation 16(f)**

See Section IX.B.1.f; EX1003, ¶ 167.

g. **Limitation 16(g)**

See Section IX.B.1.g-h; EX1003, ¶ 168.

h. **Limitation 16(h)**

See Section IX.B.1.j; EX1003, ¶ 169.

i. **Limitation 16(i)**

See Section IX.B.6. As shown in FIG. 3 of Park, the insertion port 110 is connected to an end of tongue retraction portion 130 opposite the cheek retractor. EX1003, ¶¶ 170-171.

14. **Claim 17**

See Section IX.B.3; EX1003, ¶ 172.

15. **Claim 18**

See Section IX.B.4; EX1003, ¶ 173.

16. **Claim 19**

a. **Limitation 19(a)**

See Section IX.B.1.a; EX1003, ¶ 174.

b. **Limitation 19(b)**

See Section IX.B.1.b. As discussed in Section IX.B.1.b, the four walls of Park fully enclose an interior open space, thereby at least partially enclosing an interior open space. EX1003, ¶ 175.

c. **Limitation 19(c)**

See Section IX.B.1.d and Section IX.B.3; EX1003, ¶ 176.

d. **Limitation 19(d)**

See Section IX.B.1.e; EX1003, ¶ 177.

e. **Limitation 19(e)**

See Section IX.B.1.g-h; EX1003, ¶ 178.

f. **Limitation 19(f)**

See Section IX.B.1.f; EX1003, ¶ 179.

g. **Limitation 19(g)**

See Section IX.B.1.6. As shown in FIG. 3 of Park, the suction connector is connected to a first end of tongue retraction portion 130. EX1003, ¶ 180.

h. **Limitation 19(h)**

See Section IX.B.1.j. As shown in FIG. 3 of Park, the cheek retractor is connected to a second end of tongue retraction portion 130, opposite the insertion port 110. EX1003, ¶ 181.

C. **Ground 3: Claim 10 is further obvious under 35 U.S.C. § 103 by Park in view of Baughan, Johnson, and Hirsch**

1. **Claim 10**

Park depicts a line running down the longitudinal axis of the mouth prop 100. EX1006, FIGs. 2-3. Park fails to expressly teach what this line is or how it functions. Park implies that this line likely assists in light transmission, especially considering that the light socket 111 is formed at one end of the line. EX1003, ¶ 182.

It was well known before the priority date of the '969 Patent to include a spine in a dental isolation mouthpiece. For example, Hirsch teaches a dental isolation mouthpiece with a spine 365 running down a longitudinal axis of the mouthpiece.

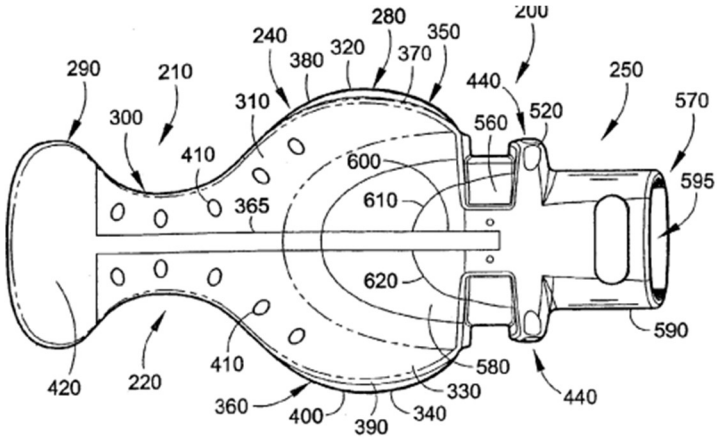

FIG. 19A

Hirsch teaches that the spine protrudes from an interior surface of the posterior wall and extends at least partially through the cheek retractor. EX1012, ¶ 78. Hirsch teaches that this spine 365 assists in dispersing light in the oral cavity – a goal that Hirsch and Park share. EX1006, Abstract; EX1012, ¶ 78. The additional benefit of the spine would be additional rigidity and resiliency, particularly where teeth engage the concave portion 131. EX1003, ¶¶ 183-185. Thus, a PHOSITA would have been motivated to include the spine of Hirsch to the mouthpiece of Park to increase

rigidity and help disperse light across the entire mouthpiece. *Id*. The increased rigidity would also help retract cheek tissue. EX1005, 7:21-39; EX1003, ¶ 185.

A PHOSITA would have expected success in adding the spine to the mouthpiece of Park, especially considering that both mouthpieces perform the same function and have very similar designs (Hirsch simply lacks sidewalls). EX1003, ¶ 185. Moreover, the addition of the spine would help prevent collapse of the top wall and bottom wall under suction. *Id*. The combination of the spine and the projections would prevent collapse at all weak areas of the mouth prop 100. *Id*. Finally, Park already envisioned two suction ports 112, so the addition of a dividing spine would not affect the ability to suction from all parts of the mouth prop 100. *Id*.

D. Ground 4: Claims 13 and 15 are obvious under 35 U.S.C. § 103 by Park in view of Baughan, Johnson, and Black

1. Claim 13

Park, unmodified, is silent regarding the thickness of its various walls. Even so, having a thicker anterior wall than a posterior wall (or vice versa) was well-known before the priority date of the ’969 Patent. Indeed, Black taught a thicker posterior wall using a longitudinal stiffener 347. EX1005, 15:63-37, FIG. 23C; EX1003, ¶ 186. Black teaches that a stiffener prevents kinking when the tongue shield is flexed and/or bent for placement within the oral cavity, and it would help retract cheek tissue. *Id.* Thus, a PHOSITA would have been motivated to thicken the anterior wall of Park using the longitudinal stiffener taught by Black to prevent

kinking when the mouth prop 100 was placed within an oral cavity. EX1003, ¶ 186. By adding the thickener, the anterior wall would be thicker than the posterior wall of Park. EX1003, ¶ 187.

2. **Claim 15**

Black teaches a removable bite block. Black teaches a groove 311 formed within a wall of the bite member's conduit 312. EX1005, 15:36-51. The groove 311 receives a projection 344 formed on the neck 346 of the tongue shield aspirator 340. *Id.* The combination of the groove and projection prevent the bite block from rotating. *Id.* The groove 311 of Black is an opening that corresponds to the projection 344, which is a plug, formed on the main body of the tongue shield aspirator 340, specifically, the neck 346. EX1003, ¶ 188.

It would have been obvious to include a corresponding groove/projection combination in the bite block to prevent rotation of the bite block of Park. EX1005, 15:46-51; EX1003, ¶ 189. It would have been further obvious to make the bite block 120 of Park detachable from the tongue retraction portion 130 in view of Black so that the bite member can be cleaned independently of the rest of the mouth prop. EX1005, 9:36-38, 9:50-52; EX1003, ¶ 189. Moreover, Black teaches that the bite block can be swapped for different sizes, so a PHOSITA would have been motivated to make the bite block removable to accommodate different sized mouths needing different sized bite blocks. EX1005, 9:36-38, 9:50-52.

E. Ground 5: Claim 19 is further obvious under 35 U.S.C. § 103 by Black in view of Hirsch

1. Claim 19

As explained above, Black teaches all of the limitations of claim 19. Moreover, Black clearly shows perforations. EX1005, FIGs. 23B, 4C. While Black never expressly specifies them as holes or perforations in the patent, the inventor of the patent, Dr. Brian P. Black, testified that the holes shown in those figures are perforations. EX1003, ¶ 90.

Nevertheless, to the extent Patent Owner argues that these illustrated holes are not perforations, it would have been obvious to include perforations in the tongue aspirator of Black in view of Hirsch. Hirsch teaches a mouthpiece with evacuation holes 410 formed on the front and rear flaps of the mouthpiece. EX1012, ¶ 79, FIGs. 19A, 19E. The addition of evacuation holes 140 on both the anterior and posterior layers 348/b of Black would have allowed for suction through the anterior and posterior layers. EX1012, ¶ 79; EX1003, ¶ 190. Thus, it would have been obvious to include a plurality of perforations on the anterior wall of Black in view of Hirsch to provide additional suction through the anterior layer. EX1003, ¶ 190. A POSITA would have expected success in adding perforations in view of Hirsch's teaching showing an open-sided mouthpiece with evacuation holes 410. EX1012, ¶ 79; EX1003, ¶ 190.

X. **CONCLUSION**

Petitioner has demonstrated in this Petition that claims 1-4 and 5-19 of the ’969 Patent are unpatentable. Petitioner, therefore, respectfully requests institution of an *inter partes* review of the ’969 Patent and that claims 1-4 and 6-19 be canceled.

Respectfully submitted,

Dated: May 20, 2025

By: /Nathan P. Sportel/

Nathan P. Sportel, Reg. No: 67,980
Brandon Griffith, Reg. No: 74,934
Jacob Cowdrey, Reg. No: 81,803
MILLER JOHNSON
45 Ottawa Ave SW, Suite 1100
Grand Rapids, MI 49503
(616) 831-1793 Telephone
(616) 831-1505 Facsimile
sporteln@millerjohnson.com
griffithb@millerjohnson.com

Attorneys for Petitioner
Ascentcare Dental Products, Inc.

CERTIFICATION

The Petition excluding the caption, Table of Contents, Table of Exhibits, Mandatory Notices under 37 C.F.R. § 42.8, and this Certification contains 9,448 words.

Respectfully submitted,

Dated: May 20, 2025

By: /Nathan P. Sportel/
Nathan P. Sportel
Reg No. 67,980
Lead Counsel for Petitioner

CERTIFICATE OF SERVICE

I hereby certify that on this the 20th day of May 2025, the foregoing Petition for *inter partes* review and all exhibits and other documents filed together with the Petition were served via Federal Express to the attorneys of record for the '969 Patent at the following address:

POLSINELLI LLP
PO Box 140310, Kansas City, MO, United States.

Angelo Christopher, achristopher@nixonpeabody.com
Daniel Burnham, dburnham@nixonpeabody.com
NIXON PEABODY
70 West Madison St., Suite 5200, Chicago, IL 60602

Michael Azzi, mazzi@wnj.com
WARNER NORCROSS
150 Ottawa Ave. NW, Suite 1500, Grand Rapids, MI 49503-2832

Respectfully submitted,

By: /Nathan P. Sportel/
Nathan P. Sportel
Reg No. 67,980
Lead Counsel for Petitioner