UNITED STATES PATENT AND TRADEMARK OFFICE

BEFORE THE PATENT TRIAL AND APPEAL BOARD

ASCENTCARE DENTAL PRODUCTS, INC.
Petitioner

v.

SOLMETEX, LLC
Patent Owner

Patent No. 11,589,969
Issue Date: February 28, 2023
Title: INTRAORAL DEVICE WITH MESH

Inter Partes Review No. IPR2025-01020

DECLARATION OF DR. BRIAN P. BLACK IN SUPPORT OF PETITIONER'S PETITION FOR *INTER PARTES* REVIEW OF U.S. PATENT NO. 11,589,969

TABLE OF CONTENTS

Contents

I. Introduction 6

II. Background and Qualifications.....7

A. Education and Work Experience 7

B. Experience Related to Isolation Mouthpieces.....9

III. Materials Considered 14

IV. Overview of the Patent At Issue 15

V. Level of Ordinary Skill in the Art.....24

A. Legal Principals 24

B. Opinion as to the Level of a Person Having Ordinary Skill in the Art of the '969 Patent.....25

VI. Claim Construction 28

A. Legal Principals 28

B. Opinion on Claim Construction.....28

VII. Summary of the Prior Art 29

A. Black 29

B. Park 31

C. Baughan 32

D. Johnson 33

E. Hirsch 34

VIII. Opinion on Grounds of Unpatentability 34

A. Legal Principals of Anticipation and Obviousness.....34

B. Ground 1: Claim 19 is anticipated under 35 U.S.C. 102(b) by Black. 38

1. Independent Claim 19 39

C. Ground 2: Claims 1-4 and 6-9, 11-12, 14, and 16-19 are obvious under 35 U.S.C. 103 by Park in view of Baughan and Johnson. 57

1. Independent Claim 1 57

2. Claim 2: "2. The dental mouthpiece of claim 1, wherein the plurality of perforations are spaced to comprise a mesh." 79

3. Claim 3: "3. The dental mouthpiece of claim 1, wherein the plurality of perforations further comprise one or more perforations in the second wall." 80

4. Claim 4: "4. The dental mouthpiece of claim 3, wherein the one or more perforations on the second wall are spaced to comprise a mesh." 81

5. Claim 6: "6. The dental mouthpiece of claim 1, further comprising a suction connector that connects to the interior open space of the pocket, the suction connector configured to connect to a vacuum source that provides suction of fluids through one or more of the plurality of the perforations of the pocket into the interior open space of the pocket towards the suction connector." 81

6. Claim 7: "7. The dental mouthpiece of claim 1, wherein the plurality of protrusions of the bridge structure collectively provide spaced contact points that keep the first wall separated from the second wall during suction." 81

7. Claim 8: "8. The dental mouthpiece of claim 7, wherein spaces between the plurality of protrusions of the bridge structure allow fluids within the interior open space of the pocket to be drawn therethrough towards a vacuum source that provides suction." 82

8. Claim 9: "9. The dental mouthpiece of claim 1, wherein the cheek retractor has a surface that applies pressure when the dental mouthpiece is bent, wherein the pressure is based on resilience of a material from which the cheek retractor is formed." 82

9. Claim 11: "11. The dental mouthpiece of claim 1, wherein the main body portion is formed by injection-molding as one piece." 83

10. Claim 12: "12. The dental mouthpiece of claim 1, wherein a material from which the main body is formed is a flexible, translucent, high heat-resistant, autoclavable silicone-based material." 83

11. Claim 13: "13. The dental mouthpiece of claim 1, wherein the first wall of the main body portion and the second wall of the main body portion have different thicknesses." 84

12. Claim 14: "14. The dental mouthpiece of claim 1, further comprising a mouth prop, the mouth prop is injection-molded in one piece." 84

13. Independent Claim 16 84

14. Claim 17: "17. The dental mouthpiece of claim 16, wherein the plurality of perforations further comprise one or more perforations in the first wall." 87

15. Claim 18: "18. The dental mouthpiece of claim 17, wherein the one or more perforations on the first wall are spaced to comprise a mesh." 87

16. Independent Claim 19 87

D. Ground 3: Claim 10 is further obvious under 35 U.S.C. 103 by Park in view of Baughan, Johnson, and Hirsch. 89

1. Claim 10: "10. The dental mouthpiece of claim 9, further comprising a stability bar protruding from the interior surface of the second wall along a longitudinal axis of the main body and extending through at least part of the cheek retractor, wherein a thickness of the stability bar corresponds to resilience by which the cheek retractor portion applies pressure during bending." 89

E. Ground 4: Claims 13 and 15 are obvious under 35 U.S.C. 103 by Park in view of Baughan, Johnson, and Black 91

1. Claim 13: "13. The dental mouthpiece of claim 1, wherein the first wall of the main body portion and the second wall of the main body portion have different thicknesses." 91

2. Claim 15: "15. The dental mouthpiece of claim 14 wherein the mouth prop comprises a bite block portion that includes an opening corresponding to a plug connected to the main body." 92

F. Ground 5: Claim 19 is obvious under 35 U.S.C. 103 by Black in view of Hirsch. 93

1. Claim 19 93

IX. Conclusion 94

I, Dr. Brian P. Black, offer this declaration in support of the Petition for *Inter Partes* Review of U.S. Patent No. 11,589,969 ("the '969 Patent"). I am over the age of 18, competent to make this declaration, and have personal knowledge of the facts set forth below. If called to testify, I could and would testify honestly, under oath, to the matters set forth herein.

I. **INTRODUCTION**

1. I am a general dentist, and I am also the inventor of a dental isolation mouthpiece sold under the name Mr. Thirsty and disclosed in U.S. Patent No. 8,029,280. I disclosed the design of that dental isolation mouthpiece in a patent application filed in 2008, several years before Patent Owner filed a provisional application related to the '969 Patent. It is my understanding that one of my patents (U.S. Patent No. 8,029,280) is being used as a ground to demonstrate invalidity of the '969 Patent.

2. I have read the '969 Patent, and I am aware of Patent Owner's dental isolation mouthpiece sold under the name "Dryshield" through my dental practice. I recognize the Dryshield autoclavable product as a mouthpiece lacking a central spine and having sidewalls that fully enclose a central chamber of the mouthpiece. My patent is directed to an open-sided tongue shield aspirator. EX1005, 22:18. Through private experimentation, I found that an open-sided mouthpiece demonstrated improved performance with better suction properties than a closed-

sided mouthpiece, like the mouthpiece disclosed by the ’969 Patent and the Dryshield autoclavable product.

3. I have been informed that Patent Owner now asserts that their patent covers open-sided mouthpieces and mouthpieces that include a central spine. In particular, Patent Owner asserts that at least some claims are not limited to mouthpieces having sidewalls connecting an anterior wall and a posterior wall to enclose an interior chamber of the mouthpiece. EX1011. It is my understanding that Patent Owner has even asserted that a “connecting wall”, as claimed in claim 19, could be met by a bite block. EX1011, p. 7. These new, much broader, constructions recite mouthpiece structure that I, and others, disclosed long before December 2012, when Patent Owner filed its provisional application. Moreover, these new, much broader, constructions contradict statements made to the Examiner during prosecution explaining the claimed apparatus. EX1002, pp. 376-378.

4. I am not an attorney, and I have not been asked to offer any legal opinions. I have been informed and understand the law to be applied for determining invalidity, which I explain in places below. I have applied the law told to me in developing my technical opinions in this Declaration.

II. BACKGROUND AND QUALIFICATIONS

A. Education and Work Experience

5. I received my dental degree (Doctor of Dental Surgery, "DDS") from Loma Linda University School of Dentistry (LLUSD) on May 28, 2000. I was born and raised in Southern California where I was educated, worked, and lived for 51 years. After I graduated from dental school, I successfully completed a one-year Advanced Education in General Dentistry (AEGD) residency through the United States Air Force (USAF) in the 82nd Dental Squadron at Sheppard Air Force Base in Wichita Falls, Texas on August 1, 2001. I then served as a staff dentist in the 95th Dental Wing at Edwards Air Force Base located in Edwards, California from September 10, 2001 to June 19, 2003. I received an honorable discharge from active duty in the USAF and returned to LLUSD as a clinical instructor, eventually becoming the predoctoral clinic director and achieving a promotion to associate professor.

6. I subsequently resigned to pursue dental product development for a company I founded in 2007. Concurrently, I also practiced as an associate dentist for a large dental group from 2009 - 2012. I then started my own dental practice, which I operated for almost ten years, growing it to over 4,000 active patients. I sold my practice on December 20, 2021 and moved to Washington state in January 2022.

7. Currently, I am employed as the lead dentist for a Native American tribe in Washington. As the lead dentist, I manage the daily operation of the tribe's

dental clinic, which is one of several departments in the tribe's community health center.

8. I have a significant history and experience in the subject matter as evidenced in the attached curriculum vitae (EX1004).

B. **Experience Related to Isolation Mouthpieces**

9. I resigned my faculty appointment at LLUSD in the Fall of 2008 to dedicate my full attention to Edge Medical Technologies, Inc., a company I founded in 2007 for the purpose of developing a competitive intraoral isolation device and, potentially, other dental products. I successfully developed and secured U.S. patents for "Mr. Thirsty," an intraoral isolation device. By "intraoral isolation device," I mean a device that the dentist or hygienist can use that holds a patient's mouth open like a bite block so the patient doesn't have to use his/her jaw muscles actively, while the device also suctions fluids away from the patient's throat so he/she does not choke on or swallow those fluids while the dentist or hygienist is working. As yet a further benefit, an intraoral isolation device retracts a patient's tongue and cheek tissue so that the tongue and the cheek tissue do not interfere with the dental procedure. The goals for such a device is: 1) for patients to be more comfortable during procedures, 2) for dentists and hygienists to have a clearer or drier working space, and 3) for dentists or hygienists to complete procedures in less time because normal disruptions are obviated, such as patients resting jaw

muscles, breathing, coughing, or swallowing fluids or debris. Also, the continuous suction from the intraoral isolation device results in fewer interruptions because the dental assistant no longer must periodically insert the typical suction tube into the mouth to clear fluids.

10. During my service in the USAF, I first learned of an intraoral isolation device named "Isolite" through dental advertisements in trade publications. Isolite offered a method for helping dental patients keep their mouths open passively during dental procedures while simultaneously removing fluids and debris through suction (as previously described), but it also provided illumination in the mouth for the dentist or hygienist to have better visibility while working.

11. I subsequently attended the California Dental Association (CDA) Scientific Session (an annual dental education conference and trade show) in Anaheim, California, May 12-15, 2005 where I saw the Isolite device displayed and sold by the company Isolite Systems (now Zyris) at their booth. Looking at the device, I noticed that it had two parts: the first part was a flexible, translucent, somewhat figure-8 shaped "mouthpiece" which had, at one end, a bite block for the upper and lower teeth to rest on and keep the patient's mouth open passively. And, extending from the inside edge of the bite block, the mouthpiece had a wide shape that blocked the tongue, then narrowed to wrap behind the upper and lower molars, and then widened again into a smaller round end flap that pushed the cheek away.

The second component was an adapter that connected to a High-Volume Evacuation (HVE) hose. The second component was specially designed to house the lighting mechanism that illuminated the mouthpiece when in the patient's mouth. The adapter inserted into the bite block end of the mouthpiece.

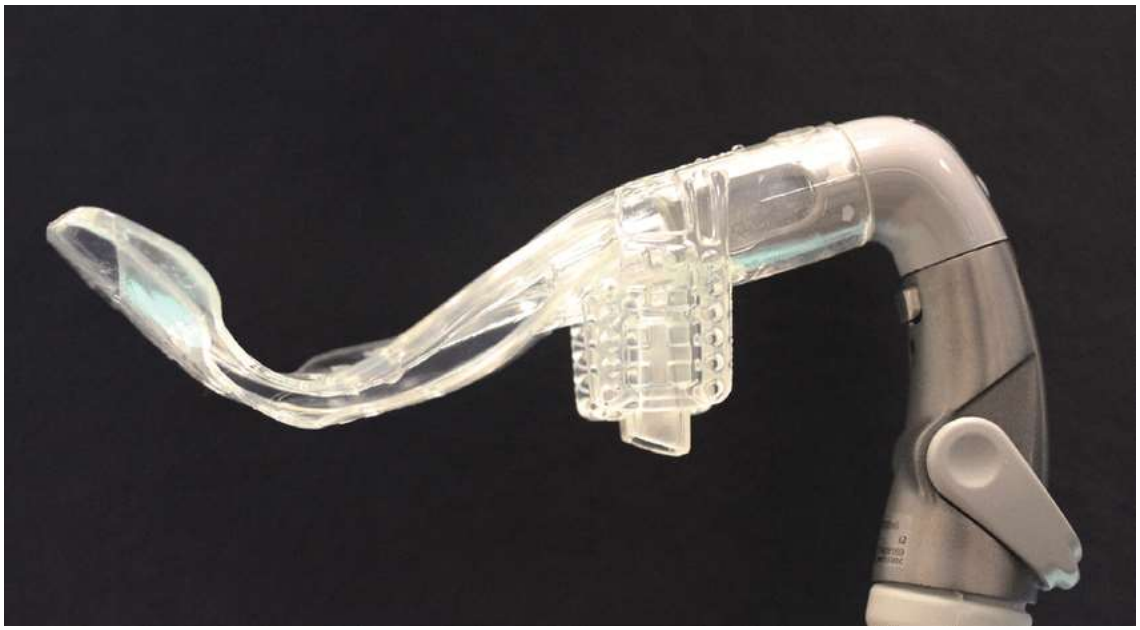

12. An HVE hose typically connects to a 9 mm internal diameter opening (or larger) for a straight or slightly angled, plastic, disposable tube that is inserted into the patient's mouth for purpose of suctioning debris during dental procedures.

Differently, the Isolite HVE adapter terminated with two smaller diameter suction channels, which results in decreased suction.

13. The Isolite mouthpiece was designed so that it had two upper and lower flaps separated by a thicker, longitudinal "spine" (imagine a butterfly whereby the body is the "spine" and the wings extending from it are the "flaps").

14. These flaps were paired (imagine the butterfly with two sets of wings of the same size and shape on each side of its body) and had a series of holes along the outer edges of each flap. When the flaps were pressed together in the mouth, suction would pull fluids through the holes and between the compressed flaps. The spine had an added benefit: it allowed light to travel through it and illuminate the mouthpiece, thereby illuminating the patient's mouth where the dentist worked.

15. The Isolite mouthpiece is symmetrical so that it could be used on either side of the mouth by rotating it 180 degrees. In so doing, there exists "upper" and "lower" channels relative to the spine. *See* EX1012.

16. I became interested in the Isolite mouthpiece while working at LLUSD. It is ideal for practitioners who do not have a dental assistant to help with fluid removal during procedures. Student dentists are not provided with dental assistants, so they work unaided. This presents a host of challenges for both the student and the patient.

17. After careful analysis of the Isolite system, I determined that there were three limiting factors: 1) high cost, 2) the advent of lightweight and affordable LED lighting for dental loupes (glasses that dentists and hygienists wear for magnified views of the teeth and gums), and 3) the lack of true HVE suction due to the Isolite HVE hose having two (upper and lower) smaller diameter suction channels that connected to the mouthpiece's upper and lower channels.

18. So, in 2007, I started to develop an affordable, disposable, unlighted, intraoral isolation dental mouthpiece that could insert directly into any standard HVE hose valve. In doing so, I reviewed prior intraoral isolation device designs. I also asked a law firm to review my concept and give an opinion on both "patentability" and "non-infringement" of known patents. I received favorable opinions on both matters. Subsequently, I was awarded U.S. Patent Nos. 8,029,280 and 8,292,620 (the latter now abandoned). The patent for my intraoral isolation device is currently licensed to Zirc Dental Products, who manufactures, markets, and sells the device as "Mr. Thirsty".

19. I have been retained as an independent expert consultant by Ascentcare Dental Products, Inc. ("Petitioner") in connection with a petition for *inter partes* review of the '969 Patent (EX1001).

20. Specifically, I was asked to investigate and opine on the technology claimed in, and the patentability or unpatentability of certain claims of the '969

Patent. I was also asked to opine on the validity of claims 1-4 and 6-19 (the "Challenged Claims") of the '969 Patent.

21. Although I am being compensated for my services in this matter at my standard consulting rate of $650 per hour, my compensation is not contingent upon the opinions I render or the outcome of this proceeding. I have no financial interest in any of the parties, and I have no other interest in this proceeding.

22. This report is based on information currently available to me. I reserve the right to amend or supplement my analysis in this report and/or to respond to any additional submissions prepared by or on behalf of the Patent Owner. I also reserve the right to amend or supplement my opinions based on further discovery and information provided in the case.

23. I reserve the right to create any additional summaries, tutorials, demonstrations, charts, drawings, tables, and/or animations that may be appropriate to supplement and demonstrate my opinions as necessary.

24. All of the opinions stated in this report are based on my own personal knowledge and professional judgment.

III. **MATERIALS CONSIDERED**

25. I have considered the following list of materials in formulating my opinions in this matter:

Ex #	**Exhibit**
1001	U.S. Patent No. 11,589,969 ("the '969 Patent")
1002	Prosecution History of the '969 Patent (part 1)
1005	U.S. Patent No. 8,029,280 to Black ("Black")
1006	Korean Patent No. 10-1082826 ("Park")
1007	U.S. Patent No. 3,101,543 ("Baughan")
1008	U.S. Patent No. 4,017,975 ("Johnson")
1011	Solmetex Infringement Contentions
1012	U.S. Patent Application No. 2003/0134253
1013	Korean Patent No. 10-0654392
1014	U.S. Patent No. 8,911,232
1015	Prosecution History of U.S. Patent No. 8,911,232
1016	U.S. Patent No. 4,024,642
1017	U.S. Patent No. 1,731,322
1018	U.S. Patent No. 6,575,746
1019	U.S. Patent No. 9,532,858
1020	Prosecution History of the '969 Patent (part 2)
1021	Prosecution History of the '969 Patent (part 3)

IV. **OVERVIEW OF THE PATENT AT ISSUE**

26. I have read and considered the '969 Patent, EX1001, filed on March 27, 2014, as well as its prosecution history. EX1002; EX1020; EX1021. I am told that the '969 Patent is a continuation of U.S. Patent No. 8,911,232, and I have also considered the prosecution history of U.S. Patent No. 8,911,232 because I have

been told that statements made in a related patent proceeding can impact the scope of other patents in the same patent family. EX1015. I have been told that the ’969 Patent has a priority date of December 7, 2012 for some claim features. It is my understanding that the provisional patent application may not support all claim limitations in the ’969 Patent, but for the purposes of my review, this date was irrelevant because all the prior art I studied was published over a year before December 7, 2012.

27. It must be noted that all four mouthpieces I considered for this report (the ’969 Patent, Hirsch, Park, Black) have similar shapes and structure due to their function.

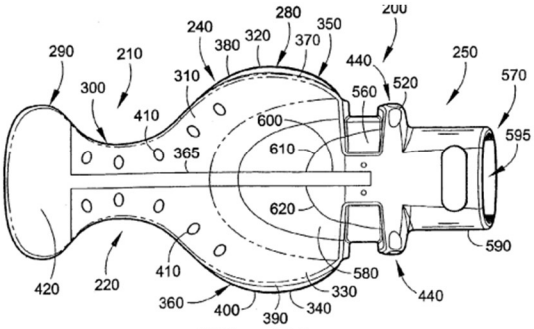

FIG. 19A

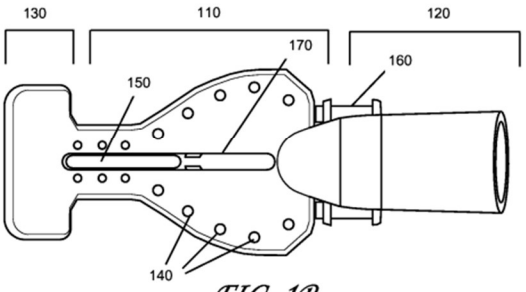

FIG. 1B

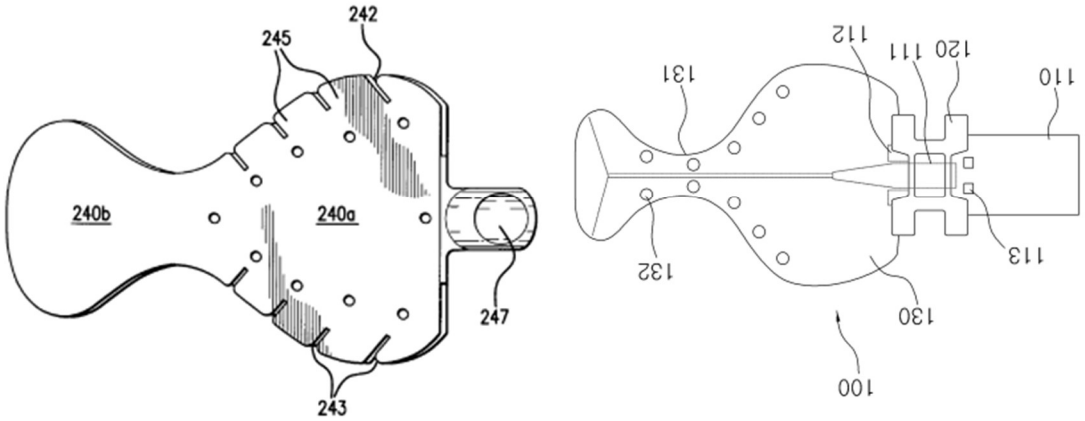

All four mouthpieces have a main larger body portion that blocks the tongue, then a narrower connecting portion that ends in a smaller cheek retractor end. On each mouthpiece, the larger body portion has an extension to connect to a suction hose. All of these devices have an anterior (front or first wall) and a posterior (back or second wall), and all mouthpieces are longitudinally symmetrical. Hence, none of these features of the ’969 Patent are novel or unique.

28. The ’969 Patent teaches a dental isolation with the same basic shape as my invention. My patent and the ’969 Patent both teach a suction connector formed on one side of the mouthpiece, a removable bite block formed near the suction connector end, a wider tongue suppression element, a narrow isthmus formed at an end of the mouthpiece opposite the suction connector, and a wider cheek retractor also connected to the isthmus. EX1001, FIG. 1B, 4:66-67, 5:19-32, 4:12-19, 3:6-12; EX1005, FIG. 23A, 14:1-20; 2:1-6.

29. The ’969 Patent, just like my patent, discloses an anterior wall/layer and a posterior wall/layer formed parallel to each other. EX1001, 3:44-49, FIG. 1A. The ’969 Patent further discloses a “bridge structure” 180, which is a plurality of projections extending upward from the posterior wall to ensure that the anterior wall remains separated from the posterior wall under suction. EX1001, 4:46-65. My patent includes the same basic idea, with my patent including a plurality of transverse walls that form channels and ensure that the anterior layer remains separated from the posterior layer. EX1005, 14:21-47

30. Indeed, the only real difference between my patent and the ’969 Patent appears to be the existence of sidewalls in the ’969 Patent, whereas my patent opted for open sides. EX1001, FIG. 1A, 1D; EX1005, FIG. 23C. However, at least one of the claims of the ’969 Patent no longer requires sidewalls. For example, claim 19 merely requires a “connecting wall” formed somewhere along an edge of the “main body portion” (i.e., the tongue retractor part). EX1001, claim 19. Knowing that Patent Owner intends to read a connecting wall formed anywhere, and not limited to the sides or limited to the main body portion, my patent includes such a connecting wall, which is formed near the suction connector. EX1011, p. 7; EX1005, e.g., FIG. 4C.

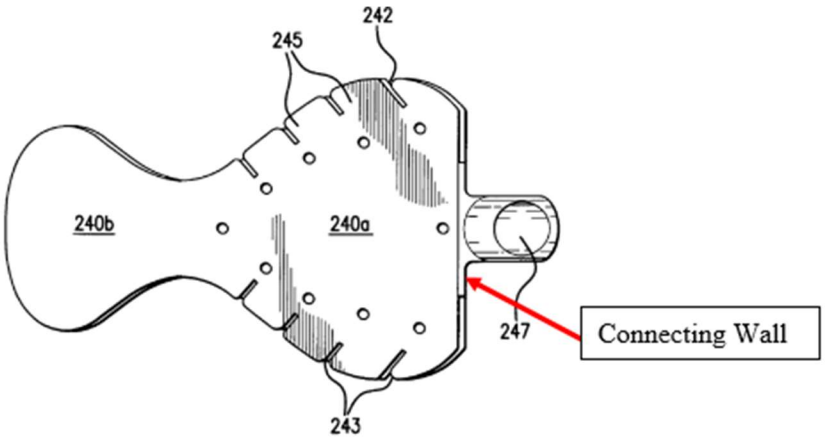

FIG.4C

31. The ’969 Patent discloses an enclosed space or "pocket", and there exists a bridge structure 180 on the interior surface of the mouthpiece’s posterior wall. EX1001, 4:46-65.

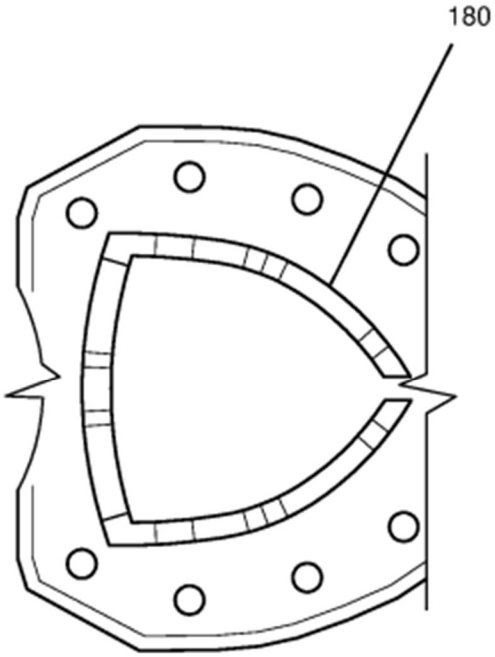

FIG. 5

The bridge 180 is, in fact, intermittent vertical extensions of the same material that comprises the interior surface of the second wall; these material extensions form the "crest" and the lack thereof forms the "trough" in this description, and the combination of crests and troughs form a “wave shape”. *Id.*

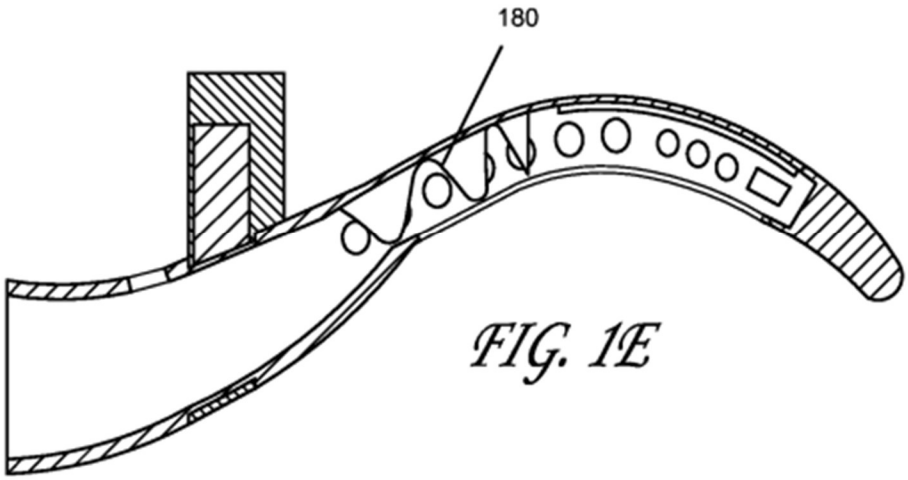

FIG. 1E

The bridge prevents the interior of second (posterior) wall from completely collapsing into the interior (facing surface) of the opposing first (anterior) wall from suction pressure because the vertical extensions called "crests" from the interior surface of the second (posterior) wall stop the interior (facing) surface of the first (anterior) wall from collapsing upon the posterior wall, thereby blocking suction. Meanwhile, the "troughs" allow for suction pressure, and thereby fluid flow, to continue within and through mouthpiece to the connected suction hose. EX1001, 4:46-65.

32. I reviewed the very long and extensive prosecution history leading up to the issuance of the ’969 Patent. Having gone through the patent system myself, twice, I was quite surprised to see that prosecution lasted for almost 9 years. This is particularly surprising when the prosecution history for the parent application lasted less than two years.

33. Beginning with the parent application, I note that the originally filed claims recited a sidewall. EX1015, p. 24. In fact, the claims are a bit more specific in explaining that the sidewall “define[s] an interior portion of the defined pocket”. *Id.* In other words, Patent Owner originally believed that his invention was directed to an enclosed pocket enclosed by an anterior wall, a posterior wall, and a sidewall. As I said above, that was also my understanding of the Dryshield product, particularly in how it differed from my invention.

34. I see that my patent was originally used to reject the claims of the parent application. EX1015, pp. 51-52. What is most interesting to me is that the Examiner agrees with me that the transverse walls 348c disclosed by Black (my patent) are “a bridge structure protruding from an interior surface of the posterior wall, the protruding structure comprising a plurality of spaced contact points that keep the anterior wall separated from the posterior wall during suction”. *Id.* The Examiner specifically said “Black discloses an intraoral suction device comprising a wave-shaped bridge structure 48c having formed therein the interior wall of the

device 40 (FIG. 3B; paragraph 80). Note that the troughs between bridges/transverse walls 48c allow for communication with the suction source." This finding by the Examiner is exactly the same position that I take below regarding why the "bridge structure" claimed in claim 19 is met by my invention. I also note that Patent Owner never refuted or disagreed with this position. EX1015, pp. 91-93.

35. My patent was again cited in the second office action against the claimed bridge structure. EX1015, pp. 109-111. Different than the first office action, the Examiner found that dependent claim 9 was now allowable, dependent claim 9 further reciting "that contact points of the bridge structure formed a wave shape with contact points at crests of the wave shape". It is unclear why this subject matter was allowable over Black in the second office action, but not the first. Regardless, Patent Owner amended the independent claims to include the subject matter of allegedly allowable claim 9, and the Examiner allowed the application. EX1015, pp. 109-111, 130, 140.

36. Now having an allowable application, Patent Owner filed a continuation application, which ultimately, after 9 years of prosecution, became the '969 Patent. EX1002, p. 19. The original claims again included a "sidewall connecting an edge of the anterior wall to an edge of the posterior wall, and

wherein at least part of the side wall comprises a plurality of perforations." *Id.* This limitation is entirely absent from claim 19 of the '969 Patent. EX1001, claim 19.

37. This patent application faced a first office action, which Patent Owner overcame, and then in the second office action, the Examiner again cited my patent. My patent was not cited against dependent claim 9, which was directed to a bridge structure, but that is likely because this claim language specifically recited that the bridge structure is not attached to the anterior wall. In contrast, the transverse walls of my patent are connected to both the anterior and posterior flaps. EX1002, pp. 225, 247; EX1005, 5:24-28. In a particularly important amendment, Patent Owner went to great lengths to explain and show the Examiner what they meant by a sidewall, and all other claim limitations for that matter. EX1002, pp. 376-378. These arguments colored the Examiner's understanding regarding claim scope, a sidewall, and a connecting wall.

38. The prosecution from 2014 to early 2021 resulted in numerous claim amendments and back-and-forths with the Examiner, but to not avail. In January 2021, Patent Owner made a dramatic change in claim scope, where, for the first time, Patent Owner attempted to claim a mouthpiece lacking *any* sidewalls. EX1020, pp. 326-329. This came after multiple office action responses where the pending claims included *two* sidewalls. *E.g.,* EX1002, pp. 479; EX1020, 112-113. Conspicuously, the dramatic claim scope change occurred just one month after

Petitioner launched a competing product that lacked sidewalls. I have been told that Petitioner launched its first mouthpiece in December 2020.

39. Ultimately, Patent Owner amended the claims to reinsert claim language directed to sidewalls in the first two independent claims, but Patent Owner used the language "connecting wall" in the third independent claim (then claim 23, now claim 19). Claim 23 was very broad and included broader language than the language that was rejected by the Examiner using Black in the parent application. EX1015, pp. 51-52, 109; EX1020, p. 329. Of course, that rejection had occurred almost a decade prior, so perhaps the Examiner forgot his previous findings and what Black said.

40. Eventually, the claims were allowed. EX1021, p. 294.

V. LEVEL OF ORDINARY SKILL IN THE ART

A. Legal Principals

41. I have been informed that patents are considered from the perspective of a person having ordinary skill in the art, and that this is a hypothetical person who is presumed to know the relevant prior art.

42. I have been informed that the following five factors inform the analysis for determining the level of ordinary skill in the art: (1) type of problems encountered in the art; (2) prior art solutions to those problems; (3) rapidity which

innovations are made; (4) sophistication of the technology; and (5) educational level of active workers in the field. I apply these factors in the section below in providing my opinion as to the level of one having ordinary skill in the art.

B. Opinion as to the Level of a Person Having Ordinary Skill in the Art of the ’969 Patent

43. I have knowledge relevant to what a person having ordinary skill in the art (“POSA”) at the time of the invention would understand and do. Indeed, in 2014, I had invented a dental isolation mouthpiece extremely similar to the ’969 Patent. By 2014, I had filed for, prosecuted, and received two patents related to my dental isolation mouthpiece. Moreover, I designed and sold my product since 2008. Additionally, I am a dentist and had been working as a dentist for 12 years by 2012. I am able to read and understand the claims and specifications of the prior art and the ’969 Patent in the light that a POSA would read and understand them.

44. In my opinion, and applying the factors set forth above in paragraph 42, a person of ordinary skill in the art at the time of the filing of the ’969 Patent would be: a person having at least a degree in mechanical engineering or dentistry, with at least 2 years’ experience designing dental isolation mouthpieces. If a person has a higher level of education, such as a master’s degree, less work experience could be acceptable, and vice versa. My opinion is based on the following analysis.

45. Regarding the types of problems encountered in the art, in 2007, I observed that the Isolite was an innovative approach to intraoral isolation because it had a mouthpiece that employed a vacuum (suction), a bite block, and a tongue and cheek retractor. However, the problem I observed was that it had a high cost, a light which was not necessary with the emerging market of lightweight, portable, wearable LED lighting, and the lack of true high-volume suction capability. As such, the types of problems encountered by the art included reducing unit cost and increasing suction capabilities of an isolation mouthpiece.

46. Prior art solutions for intraoral isolation date back to the advent of cotton rolls, which are used to block saliva flow or protect soft tissue when placed in the mouth during dental procedures. Other well-known solutions include cheek retractor shields like "dry-angles" and the rubber dam - a sheet of rubber/latex material that has a hole or series of holes punched through it to slide over a tooth or series of adjacent teeth, then held in place by an external frame and a retaining ring on the tooth. Of course, Hirsch, Park, and Black were all prior art solutions in 2012, so combined bite blocks, isolation mouthpieces, cheek retractors, and suctioning devices were known in 2012.

47. Regarding rapidity, innovations in intraoral isolation devices have occurred with a moderate frequency in the past six decades. Devices such as the "Erickson Vac-Ejector," "Svedopter," cotton rolls and cotton roll holders,

disposable saliva ejectors, and HVE tips; "Dry Angles" and rubber dams all serve as suitable intra-oral isolation devices with various advantages and limitations. Isolation mouthpieces, like Isolite, also emerged around 2000, but the basic shape and structure of those mouthpieces has not changed in over 20 years.

48. Regarding sophistication level, intraoral isolation devices can be designed using computer aided drafting (CAD) on programs such as SolidWorks and then transferred for a prototype manufacturing process using stereolithography (SLA). These technologies allow for inexpensive design and prototyping. Furthermore, modifications can be made quickly if beta testing the prototypes yields poor results. With modern injection molding machines, dental isolation products can be created with softer thermoplastic materials. Moreover, most isolation mouthpieces rely on conventional mechanical structure used in dental apparatuses for a long time, such as anti-collapse projections and molded walls disclosed at least as early as the 1960s.

49. Finally, regarding education level, some knowledge of mechanical engineering is probably required, but an understanding of intraoral anatomy is at least equally important. As such, hands-on dentistry or knowledge from those in the dentistry field cannot be substituted when trying to design dental apparatuses to be used by dentists.

50. In view of all these factors, it is my opinion that a POSA is someone with a degree in mechanical engineering or dentistry with at least two years of experience in designing dental isolation mouthpieces. Of course, more work experience could supplement a lowered educational level and vice versa.

VI. CLAIM CONSTRUCTION

A. Legal Principals

51. I have been informed that in a proceeding for *inter partes* review, claim terms in an unexpired patent are to be given their plain and ordinary meaning, as understood by a person having ordinary skill in the art, in view of the patent's specification.

B. Opinion on Claim Construction

52. I believe that all terms, for the purposes of *inter partes* review, can be given their plain and ordinary meaning in view of the specification. Also, to the extent there is any dispute regarding claim scope, I am applying Patent Owner's implied construction in view of the infringement contentions supplied.

53. To the extent that the parties have disputes as to claim interpretation, they are irrelevant to the validity of the '969 Patent because it is my opinion that all of the claims are clearly invalid as anticipated or obvious based on the prior art I have considered and my experience in the dental isolation mouthpiece field.

54. In Ground 1, applying my patent to claim 19, I apply all of Patent Owner's implied claim constructions from their infringement contentions. For example, while I do not agree that significantly different sized walls can be "corresponding" under the claim language because walls of differing size would not be able to form an acceptable connecting wall that connects the "corresponding edges", I nevertheless apply Patent Owner's implied construction here. I note that Patent Owner asserts that Petitioner's device, which has a much larger posterior wall than the anterior wall is "corresponding". EX1011, p. 5. While I do not agree with this construction, I apply it in Ground 1 to show that Patent Owner's constructions result in invalidity of at least claim 19. The same can be said of terms like "end", "edge", and "side". Patent Owner seems to conflate these words, despite using different terminology to define their invention. EX1011, p. 7. The same is true of "connecting wall". *Id.*

55. Importantly, Ground 2 shows invalidity of '969 Patent in view of either Petitioner's or Patent Owner's construction. So, again, claim construction is not an issue the Board must resolve to find invalidity.

VII. SUMMARY OF THE PRIOR ART

A. Black

56. Black is my patent, and I invented the mouthpiece disclosed by Black.

57. In the Black mouthpiece, the intra-oral device is comprised of first and second layers (like "walls" or "flaps") whereby these two layers (see column 22 line 28) are connected "by a plurality of walls such that the first and second layers are spaced apart from one another and define therebetween a single axial passageway, said passageway having a distal end that coincides with the second layer's distal edge and is open so as to be directly exposed to the patient's oral cavity at said distal end..." EX1005, 1:53-56.

58. Furthermore, in claim 16 (see EX1005, 23:34-45), these "plurality of walls including two walls disposed above the axial passageway so as to form and upper channel extending from the passageway towards the top edge of the second layer, and two walls disposed below the axial passageway so as to form a lower channel extending from the passageway towards the bottom edge of the second layer, wherein the upper channel provides fluid communication between the passageway and an upper portion of the patient's oral cavity, and the lower channel provides fluid communication between the passageway and a lower portion of the patient's oral cavity." Moreover, in claim 21, the Black mouthpiece is described to have a "longitudinal stiffener" (EX1005, 23:66-67).

59. So, the Black mouthpiece has two layers (like Hirsch "flaps") connected or "bridged" together by vertical extensions (identified as "transverse walls") to prevent collapse of the two layers when suctioning fluids through the

channels. EX1005, 5:36-44. In this case, this plurality of walls each physically connect one layer to the other as defined in the patent claims. *Id.* Also, the Black mouthpiece has a stiffener along the length of the mouthpiece to add rigidity to the device, which aids in preventing collapse during suction. EX1005, 19:4-18.

B. **Park**

60. Park discloses a "detachable oral illuminating device with a mouse [sic] prop" having a first and second wall joined by upper and lower continuous edge similar to the dental mouthpiece. EX1006, Abstract. Park also incorporates an LED light, which can be projected through a light guide that illuminates the mouthpiece while debris is suctioned through the first and second walls aided by a multiplicity of through holes. EX1006, Abstract, ¶¶ 28-31.

61. Park explains that "light guide that extends to project from the LED to the front of the fitting connection portion, guiding the light emitted from the LED to the mouse [sic] prop" and "at the center of the interior of the insertion port, a post fitting groove can be formed to accommodate the protruding light guide when the fitting connection portion is inserted, and suction ports can be formed on both sides of the post fitting groove to suck in foreign substances from the oral cavity." EX1006, ¶¶ 13-14.

62. Park further explains that "multiple through holes (132) can be formed in the tongue traction portion (130)". EX1006, ¶ 31. Finally, FIG. 2 and FIG. 6

show "multiple through holes"(132) on the "tongue traction portion" (130) and a closed, continuous edge on the illustration. *Id.*

C. **Baughan**

63. Baughan describes an intra-oral isolation device that uses a saliva ejector, which attaches to a smaller diameter, lower volume suction hose typically found in dental offices. EX1007, 1:7-44. Baughan states that one of the objectives is to "provide a dental saliva ejector which is engineered on sound theoretical principles with relation to air flow dynamics and air turbulence produced by the specific arrangement, number and size of the suction orifices and other design factors embodied in the device." EX1007, 1:26-31.

64. Continuing in the document, Baughan describes a device whereby radial discs surround a suction tube and in between the discs are vertical suction ports which intersect with the main suction tube (channel). EX1007, 2:19-35. This length of discs is covered by a perforated "sleeve" which cushion the patient's soft tissue. EX1007, 2:51-62. The Baughan patent description identifies the purpose for the sleeves and discs: "With suction applied to the main suction tube through the suction hose, the saliva which collects in the patient's mouth will be drawn inwardly through the apertures of the sleeves, and should these sleeves be drawn tightly about the discs, the saliva will always be free to pass through the notches of the disc and into the orifices which are also staggered circumferentially with

relation to the notches. After passing through the orifices, the saliva will be drawn from the patient's mouth through the main suction tube. The discs prevent the flexible sleeve or boot from collapsing upon the terminal tube portion and closing the orifices thereof." EX1007, 3:36-48.

65. So, in the Baughan design, the discs "assume vertical positions" (see EX1007, 4:6 like the "waves" in the bridge structure 180 in the ’969 Patent and are affixed to the suction tube. Within these vertical radial disks are notches similar to the "troughs" in the ’969 Patent mouthpiece bridge structure. EX1007, 2:32-35. The notches create a rigid support to allow for fluid to pass through to an open end of the suction tube even if the flexible sleeve is compressed from oral tissues. Also, the vertical radial discs extend from the interior portion of the device and are not physically connected to the outer member, which is the sleeve.

D. **Johnson**

66. Johnson describes a device of similar nature to Baughan in that a "saliva ejector is formed of a flattened body having upper and lower portions, a suction passage being formed in the body and a plurality of apertures communicating with the passage." EX1008, 1:65-67. This saliva ejector device attaches to a suction hose typically found in dental offices. The plates are also "molded of a suitable rigid or semi-rigid plastic". EX1008, 4:24-27.

67. According to claim 1 of the Johnson patent, the device forms a "combined saliva ejector and tongue restraint adapted to be placed within the oral cavity between tongue and teeth, said ejector comprising, a flattened body having upper and lower portions, said body including, first and second plates in face to face contiguity, at least of said plates being formed with a recess extending along a surface thereof that faces the other of said places to define a suction passage between said plates...said body being formed with a plurality of apertures communicating with said passage..." EX1008, 6:53-7:6.

68. Johnson also teaches multiple projections 81-86 formed on a flat surface of the saliva ejector. EX1008, 4:16-23, FIG. 3.

E. **Hirsch**

69. Hirsch discloses a mouthpiece with a central spine for added rigidity and anti-collapse support. EX1012, ¶ 78. This added rigidity helps in retracting cheek tissue because the added rigidity provides more memory force that pushes against cheek tissue based on position memory. *See* EX1005, 7:21-39. Thus, the spine assists in ensuring that the mouthpiece of Hirsch applies a proper amount of force to retract cheek tissue and prevent cheek tissue from interfering.

VIII. **OPINION ON GROUNDS OF UNPATENTABILITY**

A. **Legal Principals of Anticipation and Obviousness**

70. Anticipation under 35 U.S.C. § 102 invalidates a claim if a single prior-art reference discloses every element of the claimed invention, either expressly or inherently. Inherency must be "inevitable" or "necessary," not based on probabilities. In other words, if something is inherent, it is always present as a natural result, even if it is not expressly stated. If a single reference discloses every claim limitation, the claim is invalid.

71. I have been told that under 35 U.S.C. § 103(a), a patent may not be obtained though the invention is not identically disclosed or described as set forth in Section 102, if the differences between the subject matter sought to be patented and the prior art are such that the subject matter as a whole would have been obvious at the time the invention was made to a person having ordinary skill in the art to which said subject matter pertains."

72. When considering the issues of obviousness, I have been told that I am to do the following:

a. determine the scope and content of the prior art;
b. ascertain the differences between the prior art and the claims at issue;
c. resolve the level of ordinary skill in the pertinent art; and
d. consider evidence of secondary indicia of non-obviousness (if available).

73. I have been told that the relevant time for considering whether a claim would have been obvious to a POSA is the time of alleged invention.

74. I have been told that a reference may be modified or combined with other references or with the POSA's own knowledge if the person would have found the modification or combination obvious. A POSA is presumed to know all relevant prior art, and the obviousness analysis may consider the inferences and creative steps that a POSA would employ.

75. In determining whether a prior art reference could have been combined with another prior art reference or other information known to a person having ordinary skill in the art, I have been told that the following principals may be considered

a. a combination of familiar elements according to known methods is likely to be obvious if it yields predictable results;
b. the substitution of one known element for another is likely to be obvious if it yields predictable results;
c. the use of a known technique to improve similar items or methods in the same way is likely to be obvious if it yields predictable results;
d. the application of a known technique to a prior art reference that is ready for improvement is likely obvious if it yields predictable results;

e. any need or problem known in the field and addressed by the reference can provide a reason for combining the elements in the manner claimed;

f. a person of ordinary skill often will be able to fit the teachings of multiple references together like a puzzle; and

g. the proper analysis of obviousness requires a determination of whether a person of ordinary skill in the art would have a "reasonable expectation of success" – not "absolute predictability" of success – in achieving the claimed invention by combining prior art references.

76. I have been told that whether a prior art reference renders a patent claim unpatentable as obvious is determined form the perspective of a POSA. Further, I have been told that while there is no requirement that the prior art contain an express suggestion to combine known elements to achieve the claimed invention, a suggestion to combine known elements to achieve the claimed invention may come from the prior art as a whole or individually, as filtered through the knowledge of one skilled in the art. I have also been told that the inferences and creative steps a POSA would employ are also relevant to the determination of obviousness.

77. I have been told that when a work is available in one field, design alternatives and other market forces can prompt variations of it, either in the same

field or in another. If a POSA can implement a predictable variation and would see the benefit in doing so, that variation is likely to be obvious. In many fields, there may be little discussion of obviousness combinations, and in these fields, market demand – not scientific literature – may drive design trends. When there is a design need or market pressure and there are a finite number of predictable solutions, a POSA has good reason to pursue those known options.

78. I have been told that there is no rigid rule that a reference or combination of references must contain a "teaching, suggestion, or motivation" to combine references. But I also have been told that the "teaching, suggestion, or motivation" test can be a useful guide in establishing a rationale for combining elements of the prior art. This test poses the question whether there is an express or implied teaching, suggestion, or motivation to combine prior art elements in a way that yields the claimed invention and avoids impermissible hindsight analysis.

B. Ground 1: Claim 19 is anticipated under 35 U.S.C. 102(b) by Black.

79. It is my opinion that Black discloses all of the limitations of claim 19. EX1005. More specifically, it is my opinion that either the tongue shield aspirator 340 alone teaches all of the limitations of claim 19 or the tongue shield aspirator 340 combined with features of other embodiments within Black renders the claims obvious. That said, it should be noted that there is significant overlap between many of the embodiments in Black, and elements described in prior embodiments

are also incorporated into subsequently described embodiments. EX1005, 6:57-61 ("These, as well as many other features of the tongue shield aspirator 240 resemble those of the tongue shield aspirator 40 discussed immediately above."); 14:2-5 ("The tongue shield aspirator 340 includes features that are similar to those described above in connection with the tongue shield aspirators 40, 240 shown in FIGS. 3 and 4."). So, the teachings of earlier described embodiments do not necessarily require modification or a motivation to combine as they are already disclosed previously. To the extent an obviousness determination is necessary, I discuss this below.

1. Independent Claim 19

a. Preamble/Limitation 19(a): "A dental mouthpiece comprising:"

80. I have been informed by counsel that claim preambles are generally not a limitation when the content of the claimed preamble is an "intended use". I have been informed by counsel that preambles are generally statements of intended use when the body of a claim fully sets forth all the limitations of the claimed invention, and the preamble merely states the purpose or intended use of the invention. Here, the preamble merely states what the claimed mouthpiece is intended to do, i.e., be a dental isolation mouthpiece.

81. Even if the preamble is limiting, Black discloses an intra-oral device 300 that includes a bite member, a tongue shield aspirator, and an evacuation tube. EX1005, 11:54-60, 4:47-55, Abstract. My invention is a dental isolation system that includes a mouthpiece. The tongue shield aspirator 340 and the bite member together is a mouthpiece.

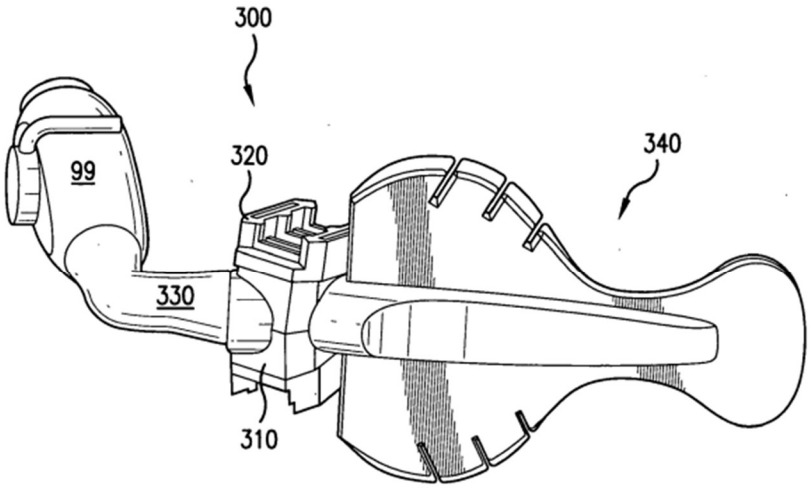

FIG. 18

b. **Limitation 19(b): "a main body portion configured as a pocket at least partially enclosing an interior space, the pocket defined by:"**

82. Black discloses a tongue shield aspirator 340 that retracts a patient's tongue and provides suction. EX1005, 14:1-9. The tongue shield aspirator 340 includes a first flap 340a and a second flap 340b. EX1005, 14:5-9. The first flap

340a retracts a patient's tongue, and the second flap 340b retracts a patient's cheek.

Id.

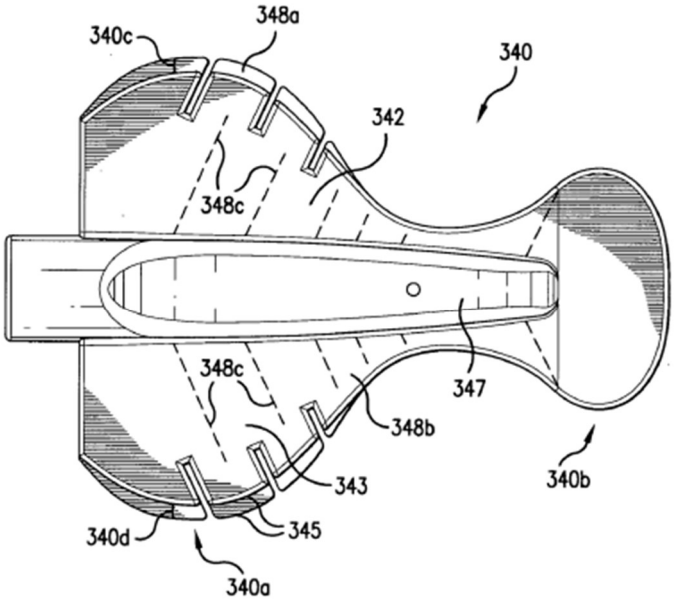

FIG.23A

83. The tongue shield aspirator 340 includes two parallel walls: a posterior layer 348a and an anterior layer 348b spaced apart by transverse walls 348c. EX1005, 14:25-30. FIG. 23C of Black illustrates an interior area between the posterior layer 348a and the anterior layer 348b. Additionally, FIG. 23A of Black illustrates the channels 342, 343 created by the transverse walls 348c. EX1005, 14:30-63. The tongue shield aspirator 340 further includes a longitudinal lumen running down the center of the mouthpiece, which is fluidly connected to each channel 342, 343. EX1005, FIG. 3, 14:21-25. Each of the lumen and the channels

342, 343 are interior spaces enclosed by the posterior layer 348a, the anterior layer 348b, and the transverse walls 348c.

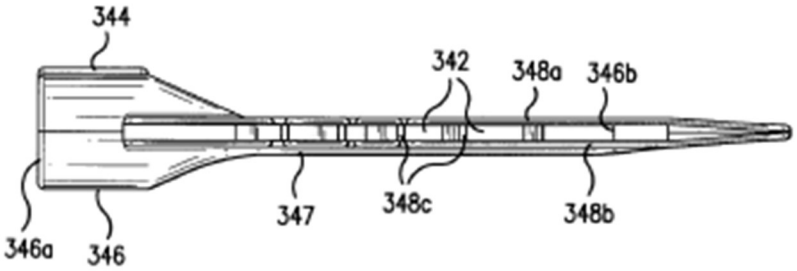

FIG.23C

84. The tongue shield aspirator 340 of Black is open-sided, but a POSA would read the claims as not requiring full enclosure. Indeed, the claim language simply says that the pocket "at least partially enclose[es] an interior space". "At least partially" simply means, to a POSA, that there must be some defined interior space, which really only requires two walls. The anterior and posterior layers 348a, 348b at least partially enclose the interior space because they are parallel and form a space between the two layers.

85. The claim specifies that the pocket is "defined" by three walls, so partial enclosure requires at least three walls in this context. EX1001, 8:21-44. Even so, Black further describes additional walls, transverse walls 348c, which create the channels 342, 343 and the longitudinal lumen in the tongue shield aspirator, and a connecting wall formed at the suction connector end of Black. EX1005, 14:21-63; FIG. 23A; See paragraphs 104-107 below. By creating these

interior spaces, in the form of at least channels 342, 343 and the longitudinal lumen, the anterior and posterior layers 348a, 348b at least partially enclose the interior space. Moreover, Black at least partially encloses an interior space using at least three walls in numerous ways, most importantly being the anterior and posterior layers 348a, b and the connecting wall formed near the neck 346 discussed below.

86. Regarding whether the tongue shield aspirator 340 is configured as a pocket, I apply Patent Owner's construction of pocket, which appears to consider any mouthpiece that at least partially encloses an interior space as a pocket. For example, Patent Owner has asserted claim 19 against an open-sided mouthpiece owned by Petitioner. EX1011, pp. 2, 4. Petitioner's product is much more similar to Hirsch (EX1012), which has four flaps and a spine. After reading the '969 Patent, a POSA wound understand that the term "pocket" means a fully-enclosed, four-sided mouthpiece. EX1001, 1:60-65, 4:6-12. Despite this understanding, it is clear that Patent Owner advances a much broader interpretation of "pocket" to mean any mouthpiece that forms interior regions using at least two walls. As such, I apply Patent Owner's implied construction here for the purposes of determining the validity of the '969 Patent.

87. Black teaches a pocket because it teaches at least three walls: the anterior layer 348b, the posterior layer, 348a, and a connecting wall formed near

the suction connector. See paragraphs 104-107 below. These three walls at least partially enclose an interior region, thereby meeting Patent Owner's implied construction of pocket. I discuss each of these walls further below.

c. **Limitation 19(c): "a first wall that includes one or more perforations in communication with the interior space of the pocket, the first wall having a shape defined by one or more edges along one or more sides;"**

88. Black discloses that the first flap 340a ("main body portion"/"pocket") includes a posterior layer 348a, which a POSA would consider a first wall. EX1005, 14:25-30. As shown in FIG. 23B, Black shows the posterior layer having a shape defined by one or more edges along one or more sides. Indeed, all shapes are defined by one or edges, so this claim limitation is essentially meaningless.

89. The tongue shield aspirator 340 shown in FIG. 23B has several edges and two sides. The sides are the top and bottom lines shown below defining the first flap 340a, and the edges at least include a superior suction connector edge (left side of FIG. 23B above the neck 346), an inferior suction connector edge (left side of FIG. 23B below the neck 346), and a continuous flap edge defining the inferior and superior sides of the first flap. EX1005, 14:43-47, 14:64-15:20, FIG. 23B. Black describes more edges because the first flap includes finger-like projections

345. EX1005, 15:52-57. Lastly, as can be seen in FIG. 23B, the posterior layer includes two holes, or perforations, formed along the longitudinal lumen.

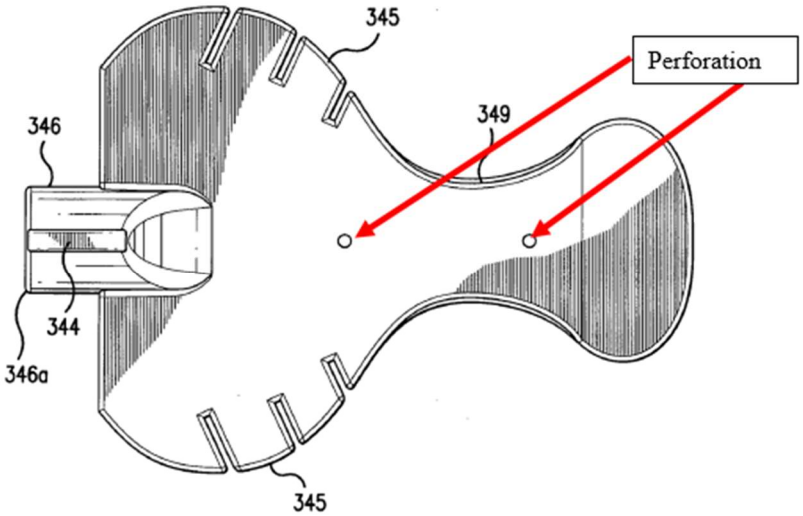

FIG.23B

90. Although the publication Black does not specifically identify these circles in FIG. 23B as holes, I am the author or Black, and I am the inventor of the tongue shield aspirator 340. I know these are perforations because I am the author of this reference. These circles are perforations, just like the circles shown in FIG. 4C.

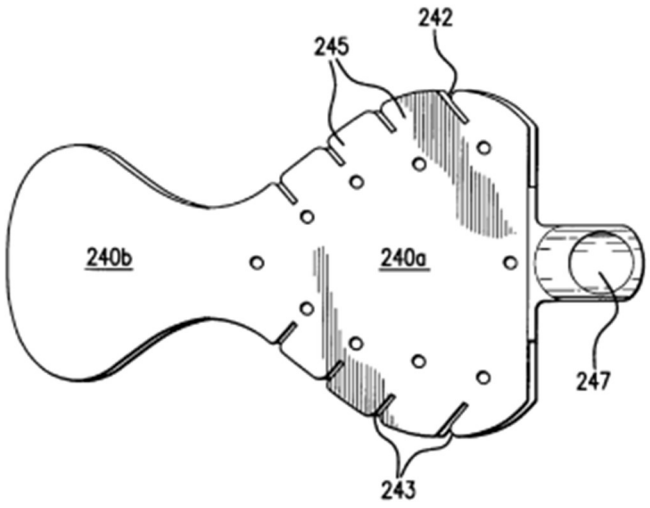

FIG.4C

91. Yes, I envisioned the use of perforations when I filed the patent application. Perforations in dental isolation mouthpieces were well-known when I wrote my patent application. EX1012, FIG. 19A. I depicted perforations without describing them because these features were so common and well-understood. Nevertheless, these circles in the figures are meant to represent holes/perforations, and thus, Black teaches perforations formed in the posterior layer.

d. **Limitation 19(d): "a second wall having a shape that corresponds to the shape of the first wall, the shape of the second wall defined by one or more corresponding edges along one or more corresponding sides,"**

92. Black discloses that the first flap 340a ("main body portion"/"pocket") includes an anterior layer 348b, which a POSA would consider a second wall. EX1005, 14:25-30. As shown in FIG. 23A, Black shows the anterior

layer having a shape defined by one or more edges along one or more sides.

(Again, essentially a meaningless limitation).

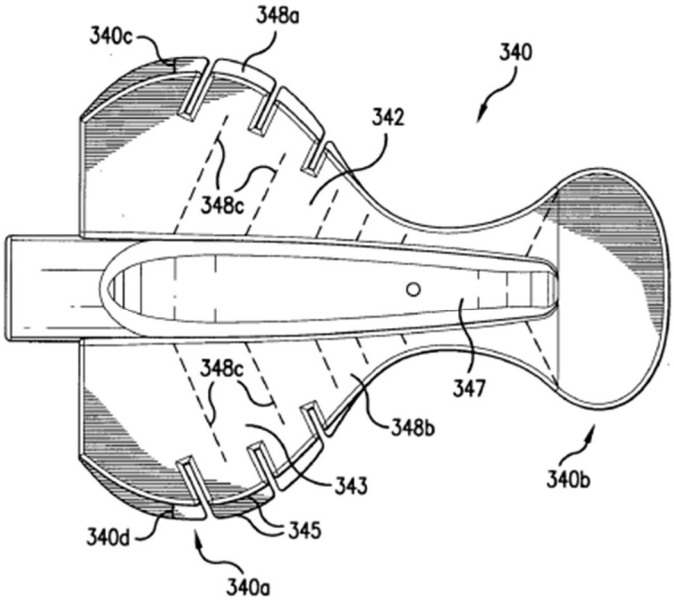

FIG.23A

93. In the embodiment shown in FIG. 23A, the anterior layer 348b is similar in size and shape to the posterior layer 348a. Therefore, a POSA would understand that the anterior layer 348b corresponds to the shape of the posterior layer 348a.

94. Nevertheless, in the embodiment shown in FIG. 23A, the posterior layer 348a is slightly bigger than the anterior layer 348b. EX1005, 15:57-63. However, other embodiments in Black show identical shapes/sizes in the two flaps. *e.g.,* EX1005, FIG. 4C. So, to the extent Patent Owner argues that "corresponding edges along one or more corresponding sides" means a wall identical in size and

shape, I foresaw such an embodiment before the priority date of the ’969 Patent.

EX1005, FIG. 4C, *see also* FIGs. 1, 3B, 13.

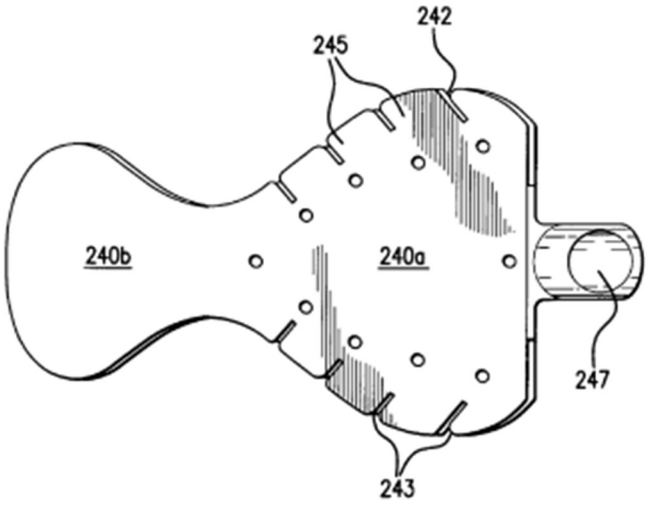

FIG.4C

95. It would have been obvious to make the make the anterior layer 348b identical in shape and size to the posterior layer 348a in view of any of FIGs. 1, 3B, 4C, or 13. I have been informed by counsel that it does not require a leap of innovation to combine features different embodiments disclosed within the same patent specification. Indeed, it would have been obvious to a POSA to change the size of the posterior wall 348a to match the size and shape of the anterior wall 348a because changes in size are generally considered obvious, especially when I disclosed other embodiments showing identical anterior and posterior walls.

EX1005, FIGs. 1, 3B, 4C, 13

96. Regardless, it appears that Patent Owner is construing "corresponding edges along one or more corresponding sides" to mean something much broader than "identical in shape and size". EX1011, pp. 4-5. Indeed, Petitioner's mouthpiece has a posterior flap that is much wider than the anterior flap; and the difference in shape and size is more profound than what I depicted in FIG. 23A. *Id.* Under this implied construction from Patent Owner's invalidity contentions, the posterior layer need to only generally resemble the anterior layer in size and shape to "correspond". Clearly, either FIG. 4C or FIG. 23A shows an anterior layer that corresponds in shape and has corresponding edges to the posterior layer under this construction.

e. **Limitation 19(e): "wherein the second wall includes a bridge structure that includes a plurality of protrusions integral with and protruding from an interior surface of the second wall within the interior space of the pocket, wherein the protrusions of the bridge structure protrude from the interior surface of the second wall toward the first wall in a wave shape comprising one or more crests and one or more troughs, and"**

97. The '969 Patent teaches a "bridge structure 180" that "ensures that the anterior and posterior surfaces remain separated under suction". EX1001, 4:46-49. The '969 Patent describes the bridge structure 180 as having "a wave-like protrusion" with "crests" and "troughs". EX1001, 4:52-63. The '969 Patent explains that the "troughs" are "gaps" between the projections formed on the inner

surface of the posterior wall, and the gaps allow water and saliva to pass between the projections to be suctioned through the suction connector. *Id.* So, the "bridge structure 180" merely describes spaced-apart projections formed in the center part of the main body portion to ensure that the posterior wall and anterior wall do not collapse under suction. EX1001, 4:46-63.

98. Spaced apart projections to ensure that the posterior and anterior flaps remain separated is exactly what I described with the transverse walls 348c. EX1005, 14:21-47. The transverse walls 348c (crests/projections) are spaced apart to create channels 342, 343 to allow for suction of fluid and debris (troughs). A POSA would know that you cannot keep two parallel walls separated under suction unless there is some mechanical structure maintaining separation. Perpendicular projecting elements, like the bridge structure and the transverse walls 348 of Black, are well-understood solutions to maintain separation of two parallel walls. EX1005, 14:21-47.

99. Thus, the claim's requirement that a bridge structure have a "wave shape" in view of the specification merely means that you need spaced-apart projections with gaps therebetween. EX1001, 4:46-63. The resulting shape is necessarily a wave shape. As you can see, in FIG. 23C, Black teaches a square wave shape formed by the channels 342 and the transverse walls 348c (i.e., the

presence transverse walls 348c and the gaps therebetween that form the channels 342).

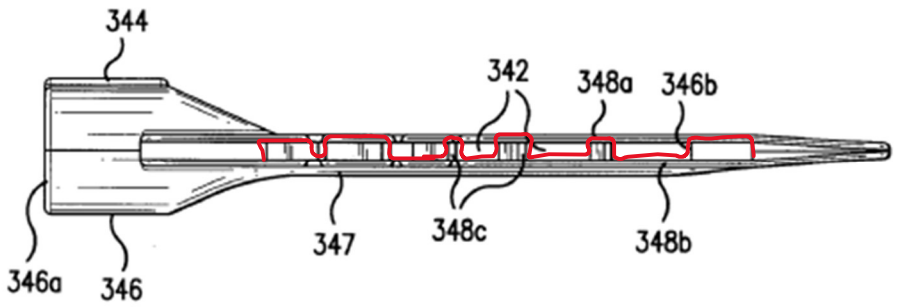

FIG.23C

100. FIG. 3B also shows the wave shape, but from a top perspective.

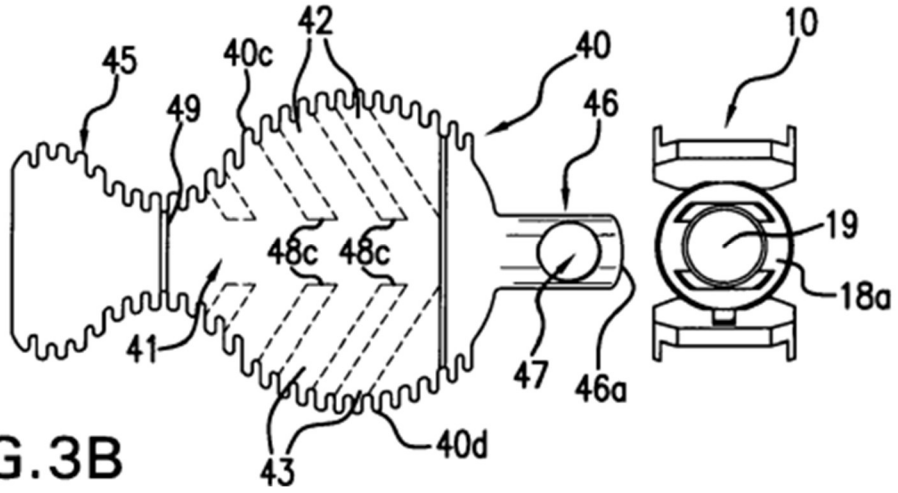

FIG.3B

FIG. 3B actually further informs FIG. 23C. EX1005, 11:55-60, 14:2-5. These channels are formed extremely similarly as those in FIG. 23A, so I do not believe an obviousness analysis is required to rely on the teachings of FIG. 3B here.

101. Black teaches transverse walls 348c with channels 342 formed therebetween. EX1005, 14:21-47. This is a bridge structure, as claimed. The

transverse walls 348c are projections/crests, and the channels therebetween are troughs. EX1005, 14:21-47. Just like the bridge structure 180, the transverse walls 348 allow for suction of fluid and debris through the troughs/channels 342 while keeping the anterior and posterior layers separated under suction. EX1005, 14:21-47.

102. The transverse walls 348c are connected to both the posterior layer and the anterior layer. EX1005, 14:21-47. Thus, the transverse walls 348c extend from an interior surface of the posterior flap toward the anterior flap. *Id.* Each wall is a protrusion, and FIGs. 23A and C, and FIG. 3B show a plurality of transverse walls.

103. Thus, Black teaches a bridge structure exactly as claimed in claim 19. I note that the Examiner agreed with me. EX1015, pp. 51-52.

f. **Limitation 19(f): "a connecting wall that connects the one or more edges of the first wall to the one or more corresponding edges of the second wall across a span between the first wall and the second wall;"**

104. Black discloses that the first flap 340a ("main body portion"/"pocket") includes a connecting wall. EX1005, FIG. 23A, *see also* FIGs. 19, 1, 3A, 4C, 24D.

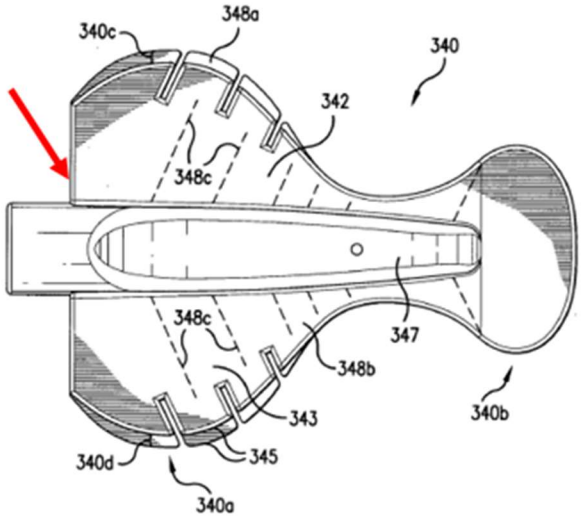

FIG.23A

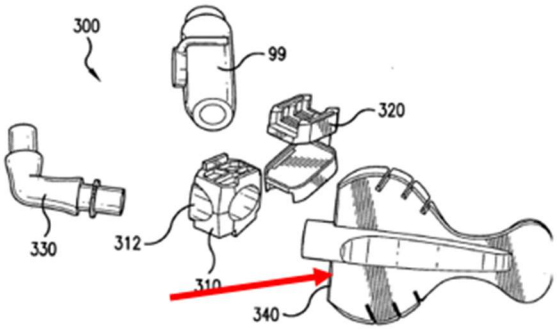

FIG.19

Patent Owner may argue that FIGs. 18-19 and 23A-23C do not definitively show a connecting wall formed at the point I show above. But again, I wrote Black and I know there is a connecting wall formed at that spot. I invented it. As further proof, many of the previous embodiments unequivocally showed such a connecting wall. EX1005, FIGs. 19, 1, 3A, 4C, 24D.

105. More specifically, many of the embodiments disclosed, including the tongue shield aspirator 240, include such a connecting wall formed near the "hollow neck 246", which is the suction port end of the tongue shield aspirator. As clearly shown in FIG. 4C, a wall connecting the posterior flap and the anterior flap is formed near the suction port. It would have been obvious to include the connecting wall shown in FIG. 4C in the tongue shield aspirator 340 to provide additional structural integrity and more anti-collapse structure near the neck 346.

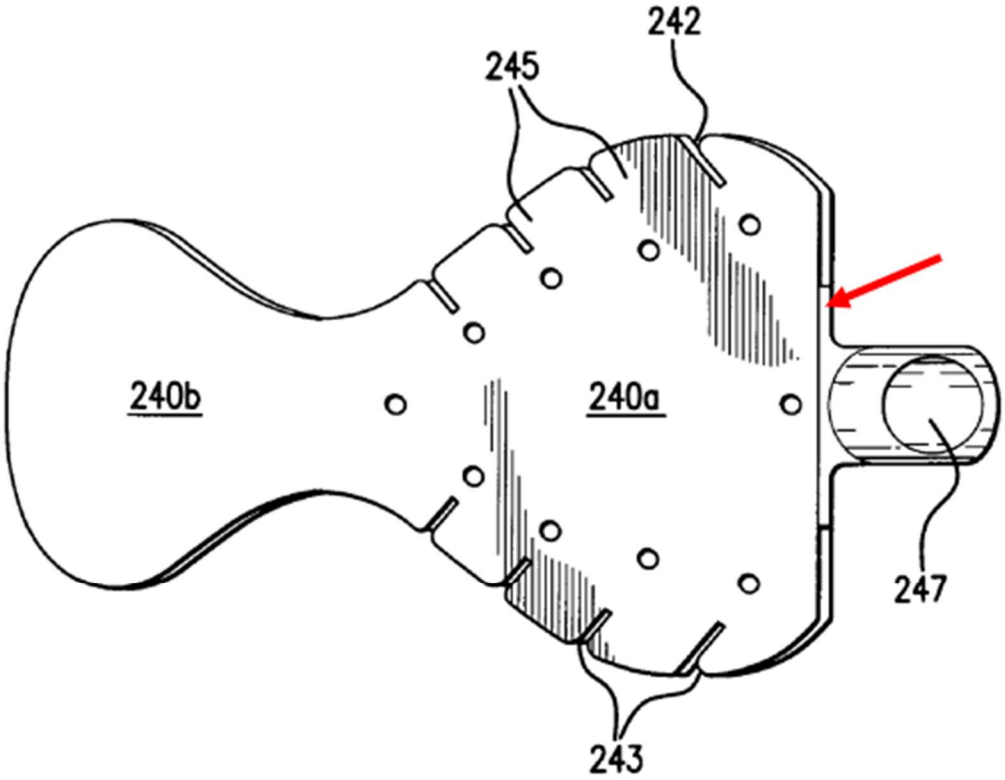

FIG.4C

106. Exactly as claimed, this wall connects an edge of the anterior wall to an edge of the posterior wall. Other embodiments show similar walls having differences in widths, including partially expanding along that end of the mouthpiece to extending across the entirety of the end.

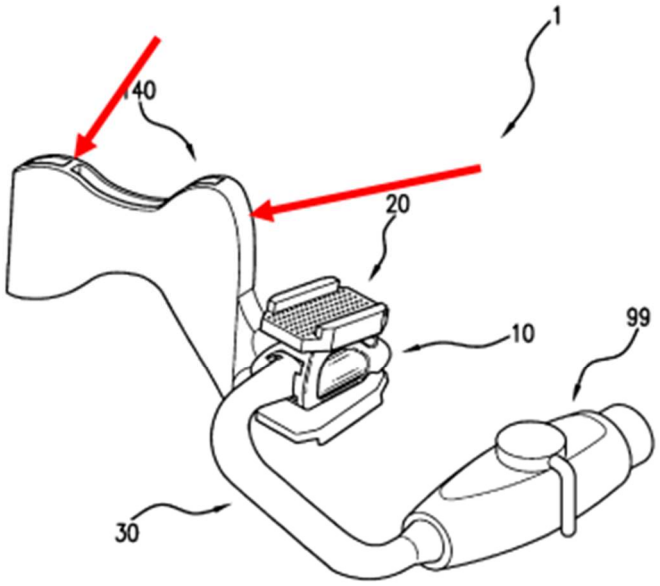

FIG. 1

Thus, if Patent Owner argues that the embodiment shown in FIG. 4C does not connect an entire "edge", it would have been obvious to extend the wall across the entire hollow neck side, as such a change would just change the dimensions or proportions of the wall. I have been told by counsel that such changes are considered obvious in view of MPEP 2144.04.

107. It should be noted that I am again applying Patent Owner's construction of "connecting wall" and "edge" and "side". During prosecution, Patent Owner went to great lengths to describe what was a sidewall. EX1002, pp. 376-378. The Examiner appears to have applied these statements about sidewalls in his understanding of the claimed invention even after the language changed

from "sidewall" to "connecting wall". Even so, Patent Owner's implied construction from their invalidity contentions shows a much broader construction. EX1011. For the sake of this Ground, I have applied Patent Owner's construction to show that their construction results in invalid claims.

g. **Limitation 19(g): "a suction connector portion connected to a first end of the main body portion, the suction connector configured to connect a vacuum source to the interior space of the pocket; and"**

108. Black discloses a hollow neck 346 that connects the tongue shield aspirator to an evacuation tube. EX1005, 15:21-51; 16:1-3. The evacuation tube is a vacuum source (HVE valve), and the evacuation tube connects the vacuum source to the channels of the tongue shield aspirator. EX1005, Abstract, 1:62-2:7, 10:18-33. Black teaches that the hollow neck 346 is formed one end of the tongue shield aspirator 340. EX1005, FIG. 23C.

h. **Limitation 19(h): "a cheek retractor connected to a second end of the main body portion, wherein the second end is opposite the first end of the main body portion."**

109. Black discloses a second flap 340b formed on an opposite side of the tongue shield aspirator 340 from the hollow neck 346. EX1005, 14:5-9, FIG. 23A. Black explains that the second flap 340b functions as a cheek retractor. *Id.*

110. Thus, Black teaches each and every limitation alone.

C. Ground 2: Claims 1-4 and 6-9, 11-12, 14, and 16-19 are obvious under 35 U.S.C. 103 by Park in view of Baughan and Johnson.

111. It is my opinion that Park in view of Baughan and Johnson teaches all of the limitations of claims 1-4 and 6-9, 11-12, 14, and 16-19.

1. Independent Claim 1

a. Preamble/Limitation 1(a): "A dental mouthpiece comprising:"

112. To the extent the preamble is limiting, Park discloses a mouth prop 100, which is a dental mouthpiece. EX1006, ¶¶ 25-26.

b. Limitation 1(b): "a main body portion, configured as a pocket having a plurality of perforations in communication with an interior open space,"

113. Park teaches a mouth prop 100 with the same general shape and configuration as Black (and many others in this dental isolation mouthpiece field). EX1006, FIG. 1-3. Park teaches a tongue traction portion 130, which is the wider portion of the mouth prop 100 that fits in the patient's intraoral cavity. EX1006, ¶ 26. This portion 130 is a main body portion.

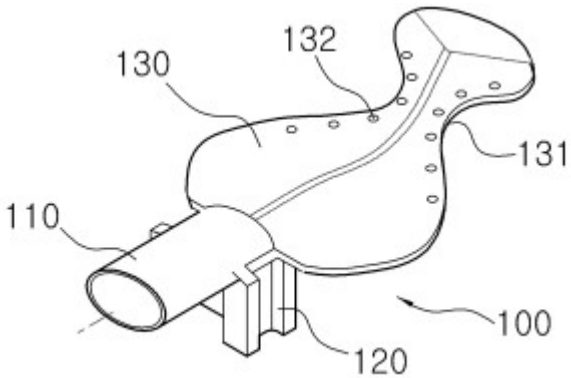

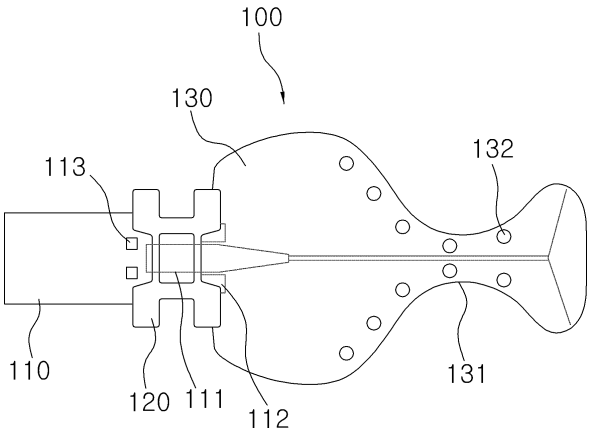

114. The tongue traction portion 130 includes a plurality of holes 132. EX1006, ¶ 31. A POSA would understand that these holes 132 are perforations.

115. Interestingly, Park also discloses an enclosed mouth prop 100 with four sides: a posterior wall, an anterior wall, and sidewalls connecting the posterior wall to the anterior wall along the sides and ends of the tongue shield aspirator 130 and a concave portion 131, which is a pocket and similar design as shown in the '969 Patent. EX1006, FIG. 2.

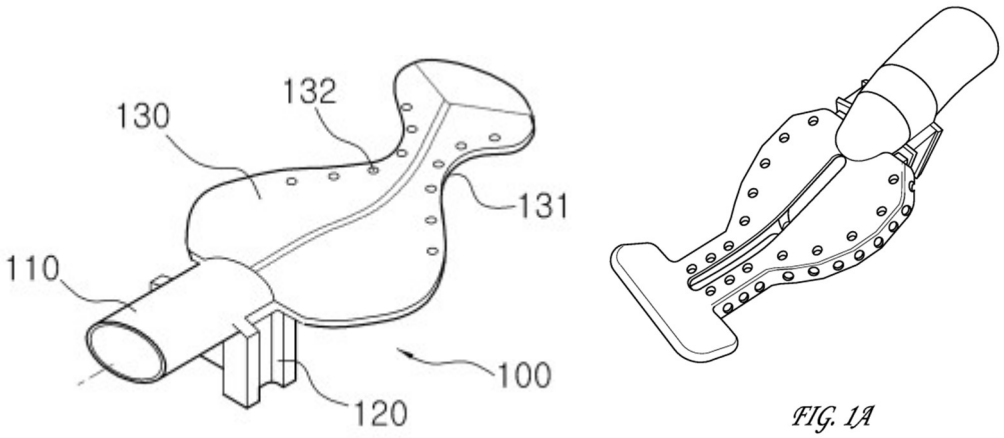

116. Park clearly shows an enclosed mouth prop 100 with sidewalls in FIGs. 1-3. Patent Owner may argue that the mouth prop 100 of Park is too thin to have true sidewalls, that Park is silent regarding sidewalls, or that the mouth prop 100 of Park is just a single flap (i.e., one wall). However, a POSA would know that cannot possibly be the case because the mouth prop 100 of Park includes holes 132. EX1006, ¶ 31. Holes in a mouthpiece, like the one shown in Park, are formed for only one purpose: suction. This is particularly true considering that the holes

are formed near the portion of the mouthpiece where a dental procedure would occur. EX1016, 2:13-20.

117. A POSA would know that dental mouthpieces having the well-known, and widely implemented, configuration of Park, Black, Hirsch, and the ’969 Patent are positioned in a patient’s mouth like this: the suction connector side (110 in Park) would extend out one side of the patient’s mouth (say, left side), and the cheek retractor side would extend into the patient’s opposite cheek (continuing my example, right cheek). Park shows this in FIG. 6.

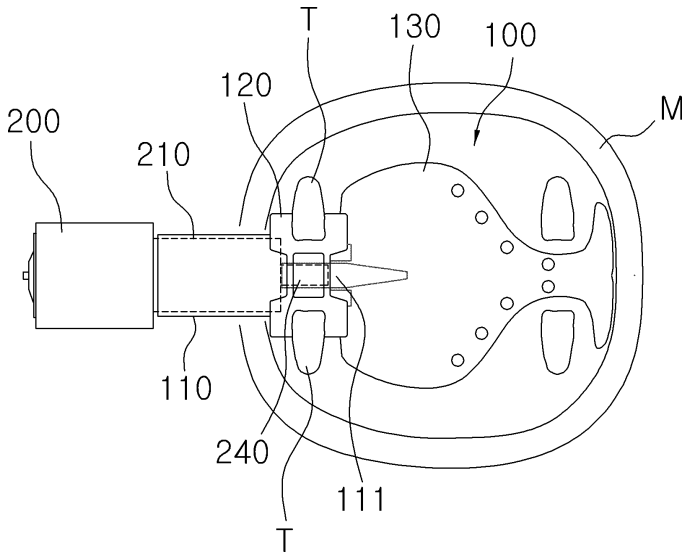

Once placed, it is the cheek retractor side where the operation (drilling, filling, sealing, etc.) occurs. EX1016, 2:13-20. The upper and lower ridges behind the patient’s molars would engage Park’s concave part 131, and the dentist would perform a dental procedure on a tooth or teeth on that side of the mouthpiece. EX1016, 2:13-20.

118. So, for example, if a patient had a cavity on his right, lower molar (tooth number, say 31), the doctor would insert the mouth prop 100 of Park such that the concave part 131 would fit between the patient's upper and lower ridges behind the patient's right molars while the patient's left molars would engage the bite block 120 of Park. In the example of a dental filling procedure, a dentist would constantly spray the teeth with water during the drilling process to keep the teeth from significantly rising in temperature due to the friction caused by drilling. EX1016, 1:6-10. A POSA would know that a significant rise in tooth temperature could damage the underlying nerve, which might require a root canal treatment to repair. The spraying water splashes due to ejection from an air/water syringe and from the drill. Not only water, but also tooth material or blood can spray from drilling and other dental operations. Thus, a POSA would know to place suction holes near the location of the dental operation as this location is where most of the fluid and debris is being generated, and which need to be removed from the patient's oral cavity, which is exactly where Park placed holes.

119. If the holes 132 were simply holes, unconnected from the suction ports 112, these holes would serve no actual purpose. In fact, they would allow fluid and debris to pass through and into the throat of a patient: the specific thing that Park seeks to avoid. EX1006, ¶ 12. A POSA would further know that allowing any fluid or debris down a patient's throat or airway would cause patient

discomfort or serious risk and should be prevented. EX1019, 4:16-21. Moreover, if the suction ports 112 did not suction through an interior chamber of the mouth prop 100 fluidly connected to the holes 132, then the suction ports 112 would be extremely inefficient, basically tasked with aspirating the entire oral cavity. Also, the positioning of the suction ports 112 would be located in the worst possible location, furthest from the location where unwanted fluid would accumulate due to the dental procedure. A POSA would know that a suction port is most efficient when positioned immediately adjacent to the fluid that should be aspirated.

120. Park teaches holes 132 that are formed on and near the concave area 131 (where the dental operation would occur). This positioning of the holes 132 is also far from the suction ports 112.

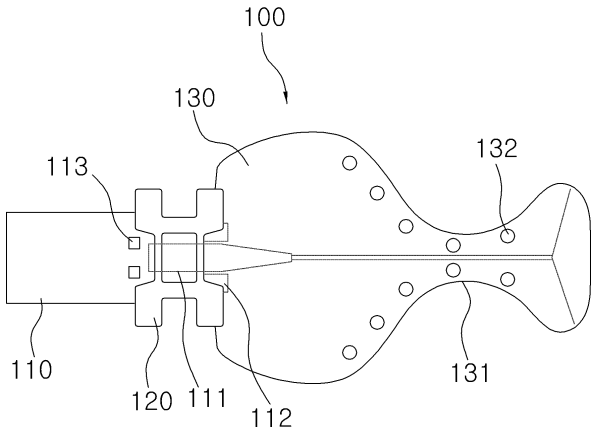

A POSA, knowing that suction is applied through the ports 112, would know that there is a fluid connection between the ports 112 and the holes 132 because the holes 132 must offer openings for suction of unwanted fluids, debris, etc. from the

oral cavity. EX1006, ¶ 28. The only efficient fluid connection between the suction ports 112 and the holes 132 would be an interior cavity formed within the four walls of Park's mouth prop 100. Thus, a POSA looking at FIG. 2 would see the through holes 132 and the depicted sidewalls and know that there must be an interior chamber inside the mouth prop that provides a low-volume space that fluidly connects the holes 132 to the suction ports 112.

121. Additionally, I note that the specification of Park explains that the insertion port 110 extends into the tongue traction portion 130, and only one side of the insertion port 110 is open. EX1006, FIG. 3, ¶¶ 27-28. If only one side of the insertion port 110 is open, then a POSA would understand that the other side is closed by the four walls of the tongue traction portion 130. FIG. 3, which shows the suction ports 112 extending into the tongue traction portion 130 further supports this conclusion.

122. Also, I note that the color of the lines representing the suction ports is slightly lighter than the lines denoting, for example, the edges of the mouth prop. A POSA would understand that this lighter shading indicates that these components are internal, and not completely visible from the exterior of the mouth prop 100. Or, they may be partially visible, since the mouth prop comprises clear silicone. EX1006, ¶ 32. I note that this difference in shading color was visible when I

looked at Park on a computer screen. When I printed a copy of Park, the contrast was not easily detectable.

123. Furthermore, Park never mentions that suction can occur through the superior or inferior sides of the mouthpiece. In fact, looking at the mouth prop 100 in the figures, a POSA would know that suction only occurs at the holes 132.

124. The only logical reason why Park includes holes 132 is to provide inlets for suction, and the only way that the holes 132 can provide inlets for suction is to be fluidly connected to the suction ports 112, and the only way that the holes 132 can be efficiently fluidly connected to the suction ports 112 (i.e. no significant loss in suction) is through an interior chamber formed within the mouth prop 100. I have been informed by counsel that when a prior art reference clearly suggests a teaching to a POSA, then the prior art reference implicitly teaches that teaching. Here, a POSA would understand that Park implicitly teaches a four-sided mouthpiece enclosing an interior space that fluidly connects the suction ports 112 to the holes 132.

c. Limitation 1(c): "the pocket having a first end that is narrower than a second end, the pocket is defined by:"

125. Park shows that the tongue traction portion 130 is wider at the end nearest to the insertion port 110 than the concave area 131. EX1006, FIG. 3.

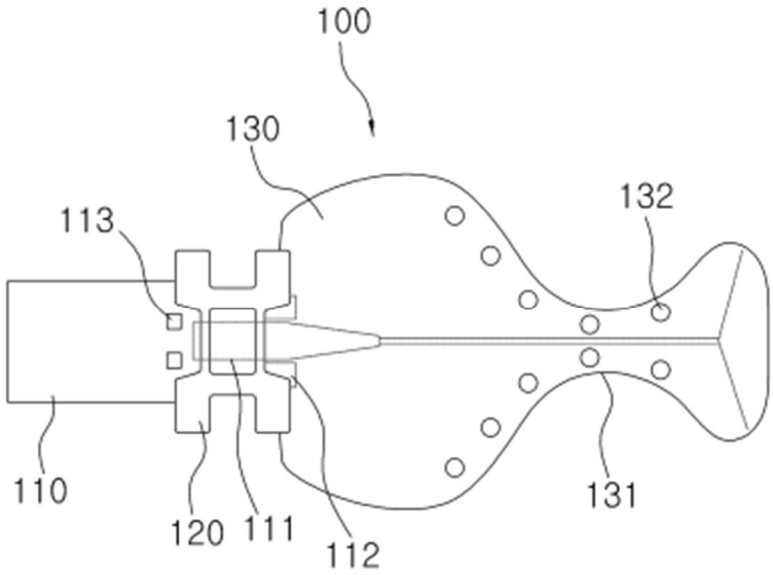

.

d. **Limitation 1(d): "a first wall having a shape defined by an exterior edge, wherein the first wall includes an opening to the interior open space of the pocket,"**

126. Park teaches a first wall that has a shape defined by the edges of the tongue shield portion 130. EX1006, FIG. 2. A POSA would know that every wall has a shape defined by its edges. Park also teaches that the first wall has holes 132, which are openings into the interior open space of the tongue traction portion 130. EX1006, ¶ 31.

127. The first wall is the anterior wall best seen by FIG. 2.

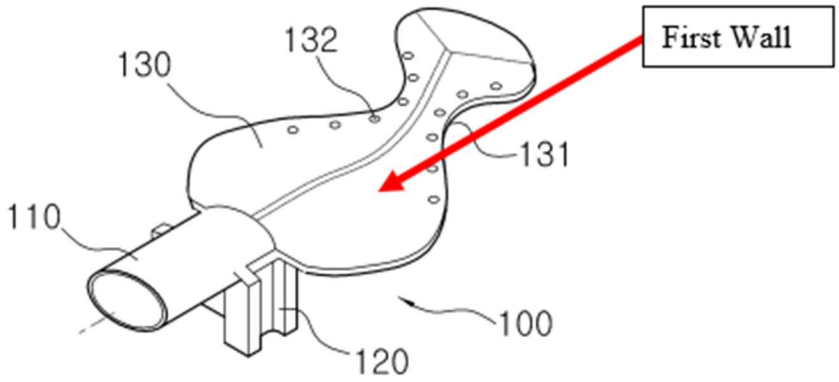

e. **Limitation 1(e): "a second wall having a shape corresponding to the defined shape of the first wall, wherein an exterior edge of the second wall shape corresponds to the exterior edge of the first wall, and"**

128. Park teaches a second wall that has a shape defined by the edges of the tongue shield portion 130. EX1006, FIG. 3. A POSA would know that every wall has a shape defined by its edges. The second wall has the exact same shape as the first wall. EX1006, FIGs. 2, 3.

129. The second wall is the posterior wall best seen by FIG. 3.

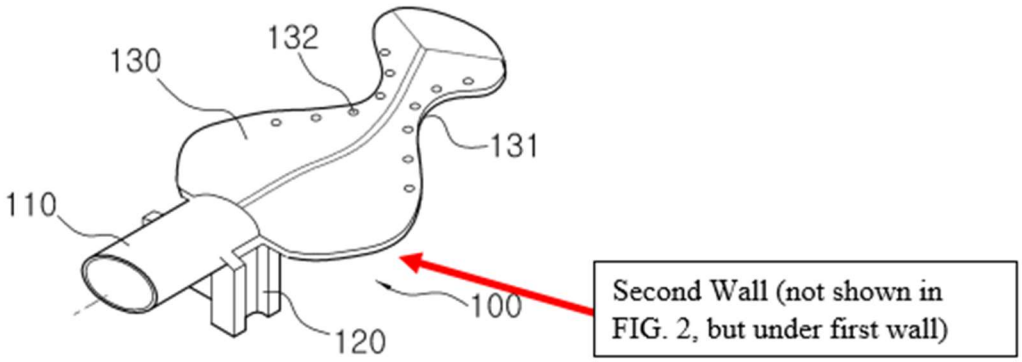

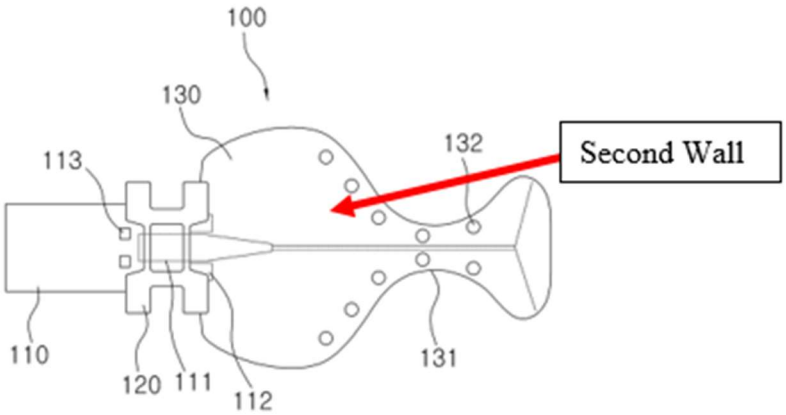

f. **Limitation 1(f): "a side wall connecting the exterior edge of the first wall to the corresponding edge of the second wall;"**

130. Park shows a sidewall that connects to the anterior wall and the posterior wall. EX1006, FIG. 2.

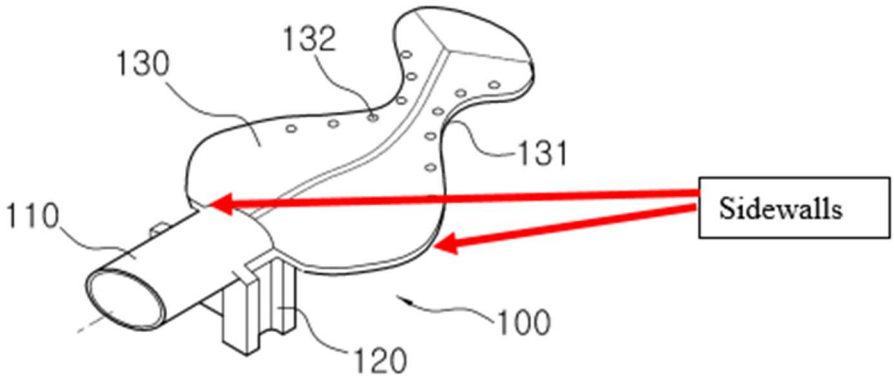

g. **Limitation 1(g): "the second wall comprising a bridge structure that includes a plurality of protrusions integral with and protruding from an interior surface of the second wall and extending a span between the first wall and the second wall, wherein the bridge structure is not attached to the first wall,"**

131. Park is primarily focused on elements of the mouth prop related to lighting. EX1006. ¶¶ 1, 5-8. As such, Park fails to expressly describe or illustrate whether the mouth prop 100 includes any internal features that assist with suction or preventing collapse under suction. Park also notes that its description omits that which is convention, such as anti-collapse structure. EX1006, ¶ 22. Park does illustrate what appears to be a light pipe extending through the mouth prop 100 (highlighted below), but it is unclear whether this is structural or simply something to assist with lighting.

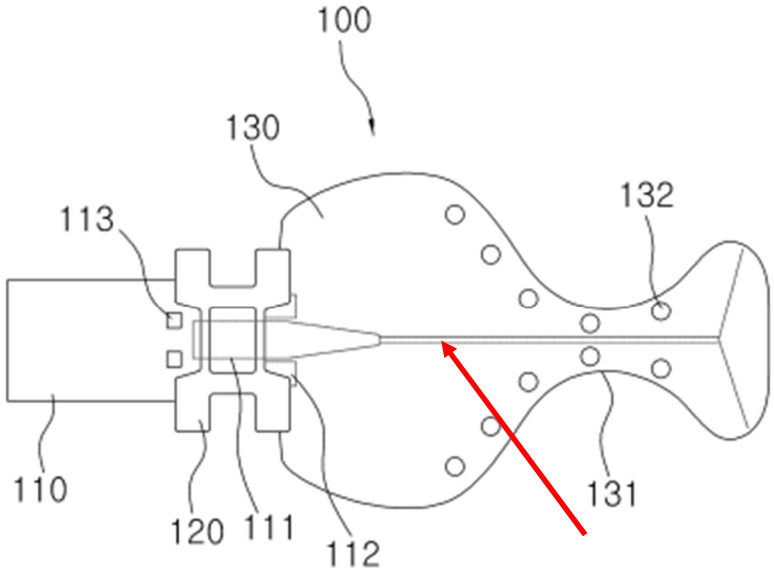

132. Nevertheless, Park does teach that suction occurs through the mouth prop 100 between the suction ports 112 and the holes 132. EX1006. ¶¶ 28, 43, 51. As explained above, a POSA would understand that a fluid connection exists through an interior chamber of the mouth prop 100 that exists between the suction ports 112 and the holes 132.

133. Knowing that suction pulls air and foreign substances through the holes and out the suction ports 112, a POSA would know that the anterior and posterior walls (first and second walls) are likely to collapse into each other due to the suction force applied by the external suction device 300. EX1006. ¶¶ 28, 42-43, 51; EX1007, 3:46-48. This is particularly true given how thin Park's mouth prop 100 appears. A POSA would recognize this tendency to collapse because Park explains that the mouth prop 100 is made of silicone with "excellent tactile properties as well as a predetermined elasticity". EX1006, ¶¶ 32, 34. The sidewalls would assist with preventing collapse under suction, but a POSA would know that there would still be weak points in the mouth prop 100 where collapse would occur under suction. A POSA would know that the locations most likely to collapse would be places furthest from anti-collapsing structure, such as sidewalls or a spine (if it exists). Looking at FIG. 3, a POSA would know that the two areas highlighted in red are most likely to collapse.

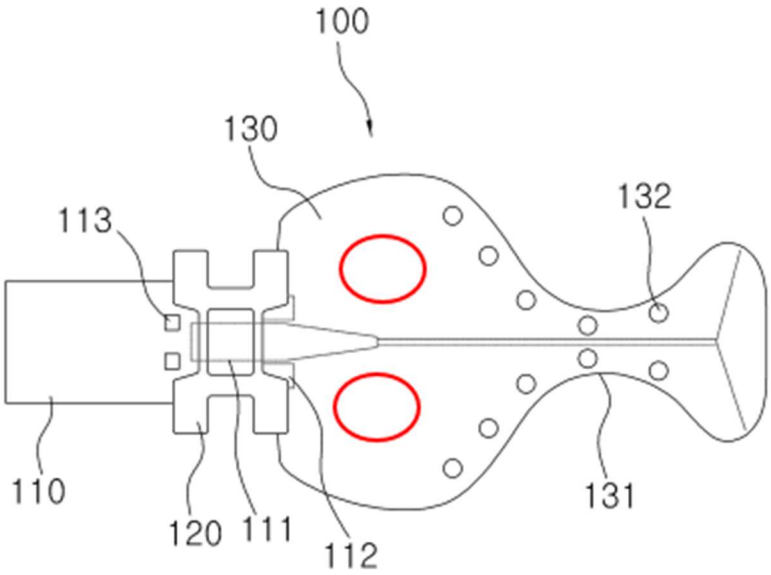

134. The above assumes that there is a spine running down the symmetrical axis of the mouthpiece. If there were no spine, and the line depicted above is simply reflective material or the light for lighting purposes (a reasonable conclusion given that the line is not depicted in FIG. 6), then the weakest point would be in the center of the tongue traction portion 130, which is highlighted in red below:

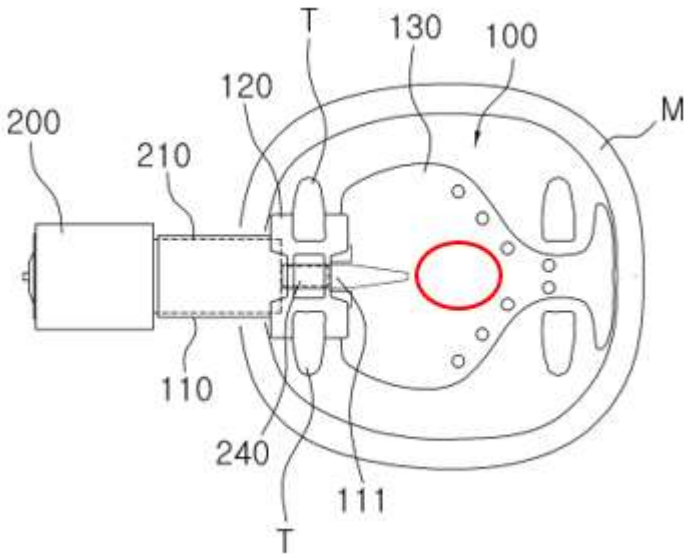

135. Even if the areas identified above do not completely collapse, they may significantly narrow under suction due to the flexible nature of the mouth prop 100. EX1006, ¶ 32, 34. A POSA would recognize that a flexible, silicone mouth prop 100 would have weak spots that collapse or significantly narrow under suction, and a POSA would have been motivated to prevent complete collapse or significant narrowing at weak parts of the mouth prop using known anti-collapse structure. EX1007, 3:43-48. Indeed, preventing collapse would be applying a known technique (anti-collapse structure) to a known device ready for improvement (the mouth prop 100 of Park) to yield predictable results (preventing collapse at weak parts of the mouth prop 100 under suction).

136. Baughan teaches well-known anti-collapse structure in the form of outward projecting, spaced apart elements that provide a force opposite the suction

force and still allow suction channels by spacing apart the elements. EX1007, 3:43-48. Baughan teaches a suction tube 15 and a sleeve 24 to fits over the suction tube 15.

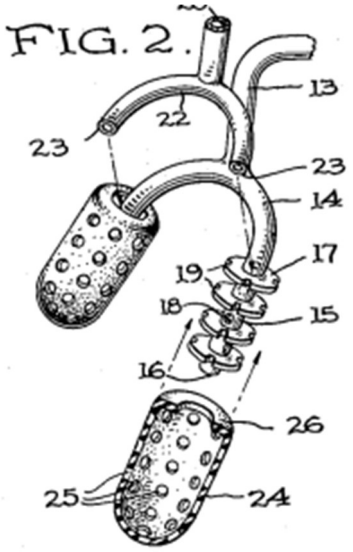

To prevent the flexible sleeve 24 from collapsing upon the tube 15, Baughan teaches three spaced-apart discs 17 that extend perpendicularly from the tube 15. EX1007, 2:19-25, 2:51-55, 3:43-48. The discs 17 engage the sleeve and apply an anti-collapse force on the sleeve 24, thereby preventing its collapse under suction. *Id.* The three discs are a plurality of protrusions protruding from an interior surface of the tube and extending a span between the tube 15 and the sleeve 24. Moreover, Baughan specifically teaches that the discs 17 are not attached to the sleeve 24, but merely contact the sleeve 24. EX1007, 2:19-25, 2:51-61.

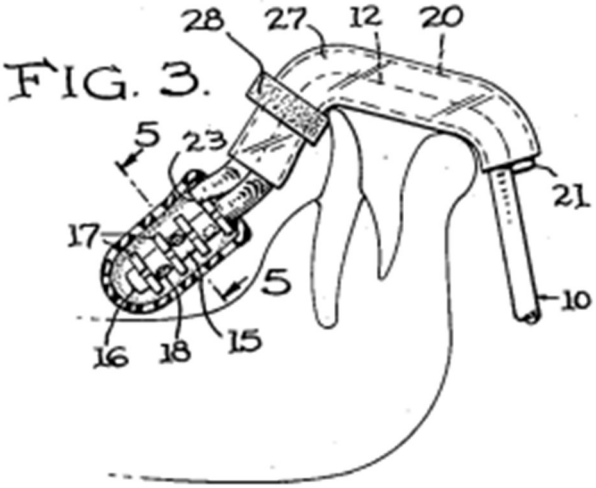

Thus, Baughan teaches a bridge structure (discs 17) that includes a plurality (3) of protrusions protruding from an interior surface of the second wall (tube 15) and extending a span between the second wall (tube 15) and the first wall (sleeve 24), and the bridge structure (discs 17) is not attached to the first wall (sleeve 24).

137. Baughan teaches an anti-collapse structure for a cylindrical, tube-shaped implementation. In this context, circular discs 17 make perfect sense. However, Baughan teaches that the discs are formed at a right angle to the tube 15. EX1007, 2:23-25. So, Baughan stands for the proposition that upward projecting elements at right angles to an underlying wall prevent collapse from a covering wall. EX1007, 2:19-25, 2:51-55, 3:43-48. Using only common sense, a POSA would know to convert the discs into basic flat projections for a non-tube implementation. Even though basic common sense is all that is required to apply the cylindrical anti-collapse structure to a flat anti-collapse structure, other prior art

teach exactly how to form such projections. For example, Johnson shows how to form projections 81-86 on a flat surface 40 for dental application. EX1008, FIG. 3.

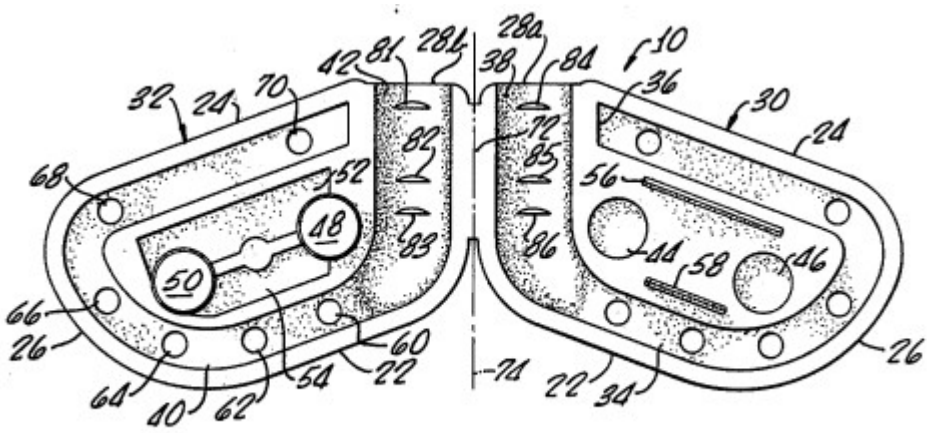

FIG. 3.

Johnson explains that the projections are molded onto interior surfaces of neck sections 28a/b. EX1008, FIG. 3, 4:16-23. Moreover, to the extent Patent Owner argues that the discs 17 of Baughan are not "integral with" the interior surface of the second wall, Johnson teaches injection molded projections 81-86 which are unequivocally integral to the interior surface of the neck sections 28a/b. Regardless, I am informed by counsel that making something integral is simply an obvious design choice that cannot be the basis of a patentable invention.

138. I should note that the discs 17 are essentially the exact same concept I taught in Black when I taught the transverse walls. The transverse walls were formed perpendicularly to the underlying wall, and prevented collapse under suction. EX1005, 5:54-59. The only difference was that my transverse walls also

connected the posterior and anterior walls. EX1005, 5:24-28. Using sidewalls would equally connect those walls, which would mean that simple projections, rather than walls connected to two perpendicular walls, could accomplish the same anti-collapse function. Projections formed this way (connected to only one wall) would be a far easier device to form when sidewalls also connect at the edges of the device.

139. Applying the teachings of Baughan and Johnson, which are very old (from the 1960s and 70s), a POSA could have easily included a plurality of spaced apart projections integrally formed on the posterior wall of Park to prevent collapsing of the posterior and anterior wall under suction at the weakest points of the mouth prop 100, which is shown above in the tongue traction portion 130. The result of adding projections to weak spots of Park would look like this:

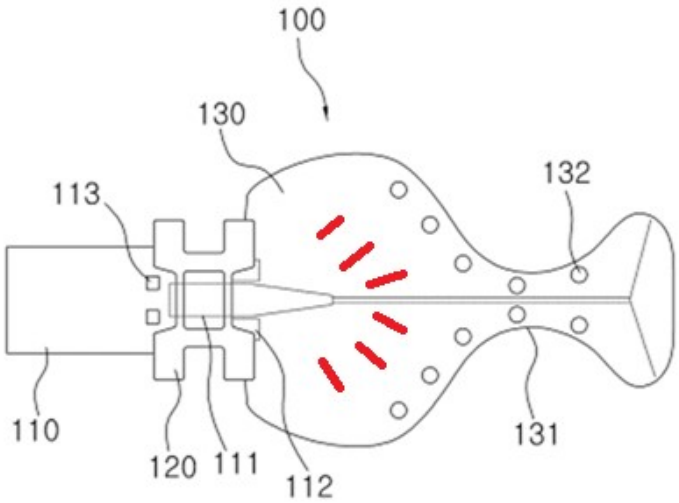

A POSA would know that the projections could be formed at any angle, including parallel to the lighting line running through the symmetrical axis of the mouthpiece. A POSA would further know that aligning the projections with the locations of the holes 132 would form a convergent flow, which would best allow for suction through the suction ports 112. EX1005, 8:21-39.

140. A POSA would have expected success in adding spaced-apart projections to the weak points of Park because these basic and conventional features were well-known to prevent collapse while still forming channels for suction between the projections. This is exactly what Baughan taught. EX1007, 2:19-25, 2:51-55, 3:43-48. Addition of spaced-apart projections to the weak spots of Park would have predictably prevented collapse or significant, restrictive narrowing of suction at weak points of the mouth prop 100 of Park while still forming suction channels between the formed projections. The combination of Baughan/Johnson to Park would be a applying a known technique (anti-collapse structure) to a known device ready for improvement (the mouth prop 100 of Park) to yield predictable results (preventing collapse at weak parts of the mouth prop 100 under suction) or combining prior art elements (a mouth prop having an interior chamber) according to known methods (using spaced-apart projections to prevent collapse under suction) to yield predictable results (the projections would prevent collapse under suction and still allow for suction channels therebetween).

141. I mentioned above the projections could be formed on the posterior wall, but a POSA would know that the projections could be formed just as easily on the anterior wall. It makes no difference which wall receives the projections so long as the projections remain spaced apart and project toward the wall that would otherwise collapse upon the wall where the projections are formed. For example, a POSA would understand that the sleeve 24 of Baughan could just as easily include circular discs extending from the sleeve 24 and unconnected to the tube to serve the same function. Moreover, the size of the projections could be adjusted to ensure proper flow and anti-collapse, as I have been informed by counsel that changes in size/proportion are generally not patentable changes.

142. So, it would have been obvious to include an anti-collapse bridge structure having a plurality of protrusions connected only to a second wall and spanning toward the first wall in the mouth prop of Park in view of the basic and well-known teachings of Baughan and Johnson to predictably result in the mouth prop 100 having projections formed in weak spots shown above.

h. **Limitation 1(h): "wherein the plurality of protrusions of the bridge structure protrude from the interior surface of the second wall in a wave shape comprising one or more crests and one or more troughs and wherein the span between the first and the second wall is less than a width of the first and the second wall,"**

143. The spaced-apart discs 17 of Baughan protrude from a surface of the tube 15 in a wave shape with three crests and at least two troughs. EX1007, FIG. 3 (annotated). A square wave shape is a wave-shape.

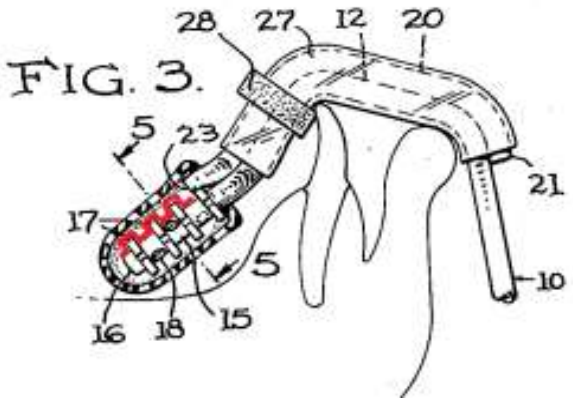

144. Park also shows that the mouthpiece is far wider than it is thick. EX1006, FIG. 2.

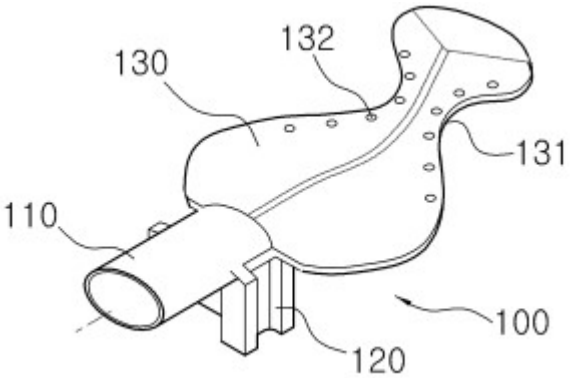

Thus, the span between the posterior wall and the anterior wall of Park is less than the width of posterior and anterior walls.

i. **Limitation 1(i): "wherein a shape of the interior open space of the pocket spans between the defined shape of the first wall and the corresponding shape of the second wall, and"**

145. Park teaches a mouth prop 100 having an interior chamber enclosed by the anterior wall, the posterior wall, and sidewalls. EX1006, ¶¶ 26-27, 30-31, FIGs. 1-3. Because the interior space is enclosed by the anterior wall, the posterior wall, and the sidewalls, the anterior wall, the posterior wall, and the sidewalls define the interior chamber's shape. *Id.* Thus, Park teaches that the shape of the interior open space of the pocket spans between the defined shape of the first wall and the second wall. This limitation would be true of any mouthpiece with parallelly formed anterior and posterior walls.

j. **Limitation 1(j): "the pocket including a transition portion at the first end and that flexibly connects to a cheek retractor, wherein the plurality of perforations comprise one or more perforations at the transition portion."**

146. Park teaches a concave section 131 that connects to a cheek retractor, and Park illustrates holes 132 formed on the concave section 132. EX1006, ¶¶ 31, FIGs. 1-3.

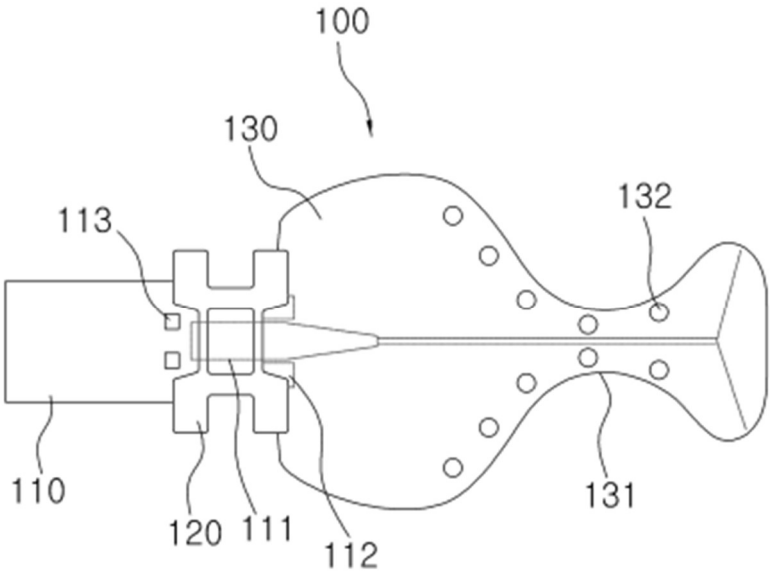

147. Therefore, claim 1 is obvious over Park in view of Baughan and Johnson.

2. **Claim 2: "2. The dental mouthpiece of claim 1, wherein the plurality of perforations are spaced to comprise a mesh."**

148. The '969 Patent describes a mesh of holes as spaced apart holes placed close to each other. EX1001, 4:8-11, FIG. 4. The '969 Patent explains that FIG. 4 shows an exemplary mesh of holes.

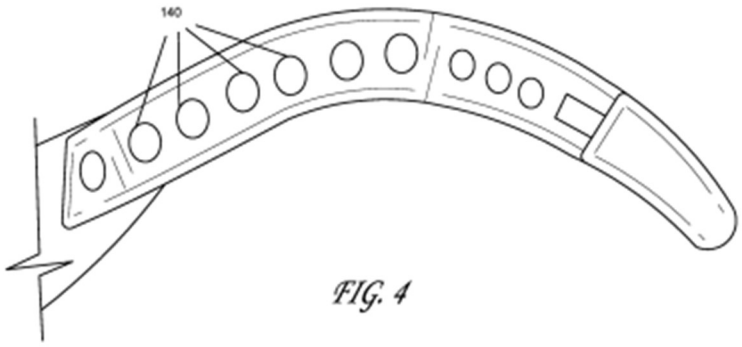

FIG. 4

149. I have never used the word "mesh" in this manner, but multiple holes 132 spaced closed to each other is exactly what Park shows. Thus, Park shows a "mesh". EX1006, FIGs. 2-3.

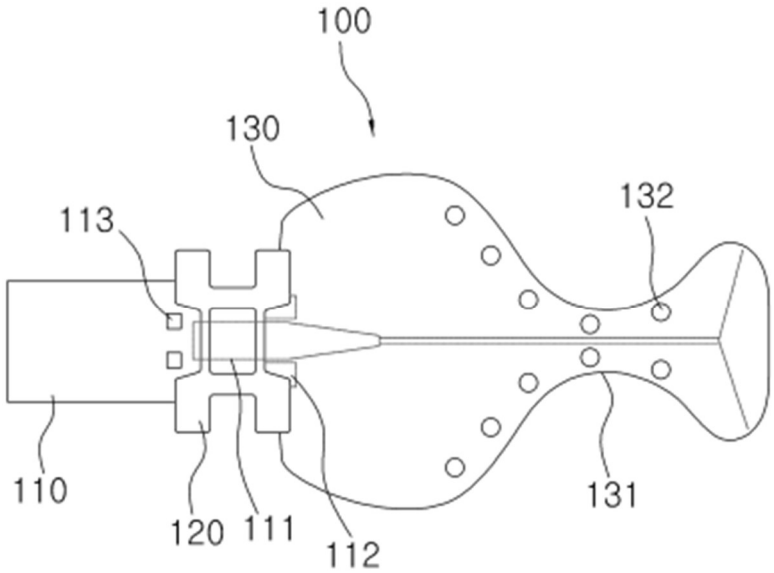

3. **Claim 3: "3. The dental mouthpiece of claim 1, wherein the plurality of perforations further comprise one or more perforations in the second wall."**

150. Park illustrates holes 132 formed on both the anterior wall and the posterior wall. EX1006, FIGs 2-3. Thus, Park teaches perforations formed on the second wall.

4. **Claim 4: "4. The dental mouthpiece of claim 3, wherein the one or more perforations on the second wall are spaced to comprise a mesh."**

151. See paragraphs 148-149.

5. **Claim 6: "6. The dental mouthpiece of claim 1, further comprising a suction connector that connects to the interior open space of the pocket, the suction connector configured to connect to a vacuum source that provides suction of fluids through one or more of the plurality of the perforations of the pocket into the interior open space of the pocket towards the suction connector."**

152. Park teaches an insertion port 110 connects the interior space, via suction ports 112, to a device body 200, and the device body 200 includes a suction line 260 that connects to an external suction device 300. EX1006, ¶¶ 26-27, 42. Park explains that the mouth prop 100 suctions fluids through the suction ports, which are connected to the holes 132 through the interior space of the mouth prop 100, which I explained above. EX1006, ¶¶ 31, 43.

6. **Claim 7: "7. The dental mouthpiece of claim 1, wherein the plurality of protrusions of the bridge structure collectively provide spaced contact points that keep the first wall separated from the second wall during suction."**

153. The disc 17 of Baughan are spaced apart, and the outer circumference of each disc is a contact point with the sleeve 24. EX1007, 2:60-62. Baughan teaches that the sleeve 24 rests upon each disc, so the discs 17 are contact points. EX1007, 2:60-62. Finally, Baughan teaches that the disc specifically keeps the sleeve 24 separated from the tube 15 under suction. EX1007, 3:43-48.

7. **Claim 8: "8. The dental mouthpiece of claim 7, wherein spaces between the plurality of protrusions of the bridge structure allow fluids within the interior open space of the pocket to be drawn therethrough towards a vacuum source that provides suction."**

154. Baughan teaches that the discs 17 are spaced apart to allow for fluids to be suctioned. EX1007, 2:19-35, 2:51-62. A POSA would know that spacing apart projections would create channels between the projections for the suction of fluids through the insertion port where suction force is applied by the external suction device 300 through the suction line 260.

8. **Claim 9: "9. The dental mouthpiece of claim 1, wherein the cheek retractor has a surface that applies pressure when the dental mouthpiece is bent, wherein the pressure is based on resilience of a material from which the cheek retractor is formed."**

155. Park explains that the cheek retractor end of the mouth prop 100 keeps cheek tissue away from the operation space when bent. EX1006, ¶ 31. Park explains that the mouth prop 100 comprises a flexible silicone having "excellent tactile properties as well as a predetermined elasticity. EX1006, ¶ 32. A POSA

would understand that the elasticity would retract the cheek tissue. A POSA would understand that elasticity and "resiliency" are essentially synonymous concepts when describing how an elastic device can retract cheek tissue.

9. Claim 11: "11. The dental mouthpiece of claim 1, wherein the main body portion is formed by injection-molding as one piece."

156. Park teaches a mouth prop formed in one piece. EX1006, ¶ 32. Park explains that the mouth prop 100, as a whole, is detachable from the device body 200 and sterilized as one piece. EX1006, ¶ 53. Thus, a POSA would understand that the mouth prop 100 is formed as one piece.

157. Park explains that the mouth prop comprises silicone. EX1006, ¶ 32. A POSA would know that silicone is most commonly formed by injection molding. This is a very, very common process, and has been for a long time. EX1008, 5:20-22.

10. Claim 12: "12. The dental mouthpiece of claim 1, wherein a material from which the main body is formed is a flexible, translucent, high heat-resistant, autoclavable silicone-based material."

158. Park teaches a flexible, transparent, autoclavable, silicone material. EX1006, ¶¶ 32, 49. A POSA would know that silicone is high heat-resistant because it is autoclavable.

11. **Claim 13: "13. The dental mouthpiece of claim 1, wherein the first wall of the main body portion and the second wall of the main body portion have different thicknesses."**

159. After modifying Park with Baughan/Johnson, the posterior wall would include projections to prevent collapse, which is described above. As a result of the projections, the posterior wall would have a different thickness than the anterior wall.

12. **Claim 14: "14. The dental mouthpiece of claim 1, further comprising a mouth prop, the mouth prop is injection-molded in one piece."**

160. Park teaches a tooth support section 120 that engages a patient's teeth as a bite block. EX1006, ¶ 29, 32, 54, Abstract, FIG. 1-3. This tooth support section 120 is formed as one piece with the rest of the mouth prop 100. *Id.* Park explains that the mouth prop comprises silicone. EX1006, ¶ 32. A POSA would know that silicone is most commonly formed by injection molding. This is a very, very common process, and has been for a long time. EX1008, 5:20-22.

13. **Independent Claim 16**

a. **Preamble/Limitation 16(a): "A dental mouthpiece comprising:"**

161. See paragraph 112.

b. **Limitation 16(b): "a cheek retractor;"**

162. See paragraph 146.

c. **Limitation 16(c): "a main body portion having a first end connected to the cheek retractor, the main body portion configured as a pocket having a plurality of perforations in communication with an interior open space, the pocket is defined by:"**

163. See paragraphs 113-124.

164. As shown, Park's cheek retractor is formed on one end of the tongue traction portion 130 that is the opposite end of the insertion port 110.

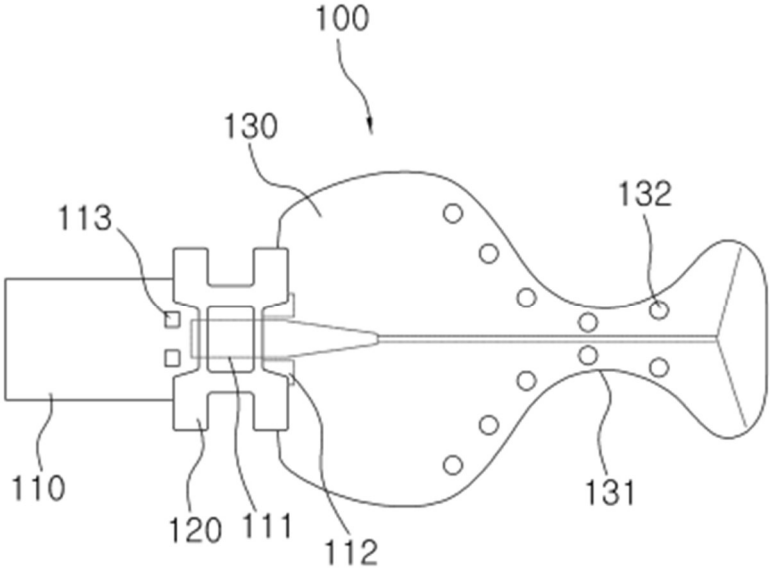

d. **Limitation 16(d): "a first wall having a shape defined by an exterior edge, wherein the first wall includes an opening to the interior open space of the pocket,"**

165. See paragraphs 126-127.

e. **Limitation 16(e): "a second wall having a shape corresponding to the defined shape of the first wall, wherein an exterior edge of the second wall shape corresponds to the exterior edge of the first wall, and"**

166. See paragraphs 128-129.

f. **Limitation 16(f): "a side wall connecting the exterior edge of the first wall to the corresponding edge of the second wall;"**

167. See paragraph 130.

g. **Limitation 16(g): "the second wall comprising a bridge structure that includes a plurality of protrusions integral with and protruding from an interior surface of the second wall and extending a span between the first wall and the second wall, wherein the bridge structure is not attached to the first wall, wherein the plurality of protrusions of the bridge structure protrude from the interior surface of the second wall in a wave shape comprising one or more crests and one or more troughs;"**

168. See paragraphs 131-144.

h. **Limitation 16(h): "the pocket including a transition portion at the first end that flexibly connects to the cheek retractor;"**

169. See paragraphs 146-147.

i. **Limitation 16(i): "a suction connector portion connected to a second end of the main body portion, the suction connector configured to connect a vacuum source to the interior open space of the pocket within the main body portion"**

170. See paragraph 152. As shown, Park's cheek retractor is formed on one end of the tongue traction portion 130 that is the opposite end of the insertion port 110.

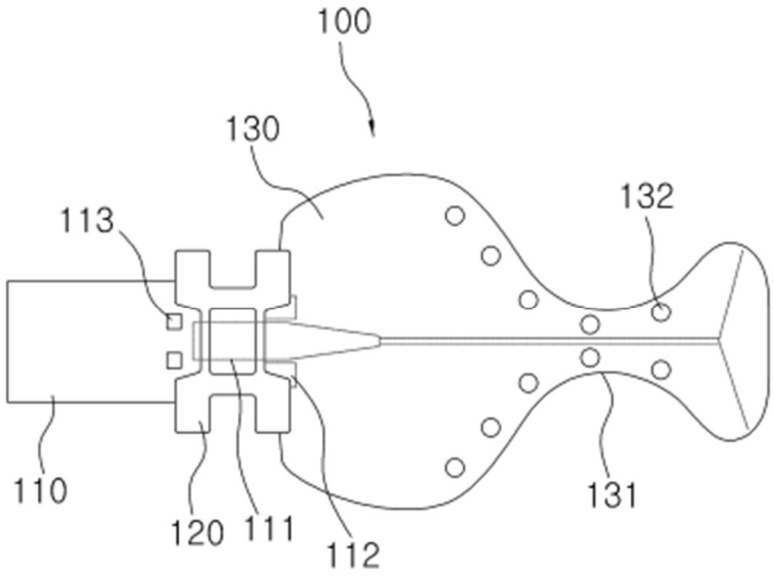

171. Therefore, claim 16 is obvious over Park in view of Baughan and Johnson.

14. **Claim 17: "17. The dental mouthpiece of claim 16, wherein the plurality of perforations further comprise one or more perforations in the first wall."**

172. See paragraph 150.

15. **Claim 18: "18. The dental mouthpiece of claim 17, wherein the one or more perforations on the first wall are spaced to comprise a mesh."**

173. See paragraph 151.

16. **Independent Claim 19**

a. **Preamble/Limitation 19(a): "A dental mouthpiece comprising:"**

174. See paragraph 112.

b. **Limitation 19(b): "a main body portion configured as a pocket at least partially enclosing an interior space, the pocket defined by"**

175. See paragraphs 113-124.

c. **Limitation 19(c): "a first wall that includes one or more perforations in communication with the interior space of the pocket, the first wall having a shape defined by one or more edges along one or more sides;"**

176. See paragraphs 126-127 and 150.

d. **Limitation 19(d): "a second wall having a shape corresponding to the defined shape of the first wall, wherein an exterior edge of the second wall shape corresponds to the exterior edge of the first wall, and"**

177. See paragraphs 12892-129.

e. **Limitation 19(e): "wherein the second wall includes a bridge structure that includes a plurality of protrusions integral with and protruding from an interior surface of the second wall within the interior space of the pocket, wherein the protrusions of the bridge structure protrude from the interior surface of the second wall toward the first wall in a wave shape comprising one or more crests and one or more troughs, and"**

178. See paragraphs 131-144.

f. **Limitation 19(f): "a connecting wall that connects the one or more edges of the first wall to the one or more corresponding edges of the second wall across a span between the first wall and the second wall;"**

179. See paragraph 130.

g. **Limitation 19(g): "a suction connector portion connected to a first end of the main body portion, the suction connector configured to connect a vacuum source to the interior open space of the pocket within the main body portion"**

180. See paragraph 170.

h. **Limitation 19(f): "a cheek retractor connected to a second end of the main body portion, wherein the second end is opposite the first end of the main body portion."**

181. See paragraph 163-164.

D. **Ground 3: Claim 10 is further obvious under 35 U.S.C. 103 by Park in view of Baughan, Johnson, and Hirsch.**

1. **Claim 10: "10. The dental mouthpiece of claim 9, further comprising a stability bar protruding from the interior surface of the second wall along a longitudinal axis of the main body and extending through at least part of the cheek retractor, wherein a thickness of the stability bar corresponds to resilience by which the cheek retractor portion applies pressure during bending."**

182. Park incorporates an LED light, which can be projected through a light guide that illuminates the mouthpiece while debris is suctioned through the first and second walls aided by a multiplicity of through holes. EX1006, FIGs. 2-3. Park is not expressly clear whether there also exists a spine extending down the longitudinal axis of the mouth prop 100. My first impression was that the mouth prop 100 includes a spine, but it is equally possible that this line is reflective material to helps with light transmission.

183. Regardless, spines in dental isolation mouthpieces were entirely conventional. In fact, the first dental isolation mouthpiece I ever saw in 2003 had such a spine. That device corresponded to the device disclosed in Hirsch. Hirsch illustrates a spine 365 running down the longitudinal axis of the mouthpiece.

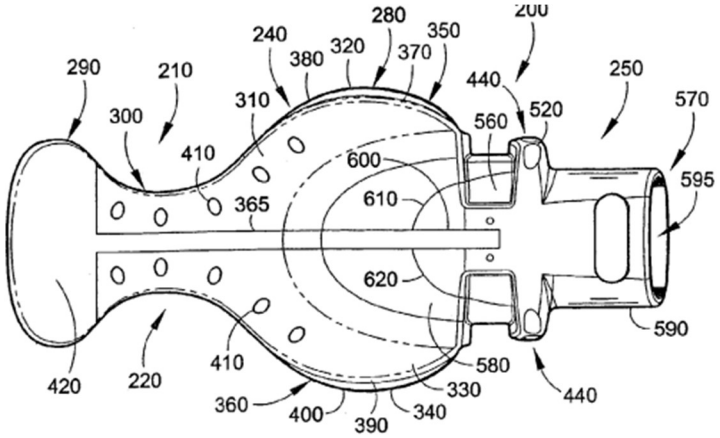

FIG. 19A

184. Hirsch teaches that the spine protrudes from an interior surface of the posterior wall of Hirsch and extends at least partially through the cheek retractor. EX1012, ¶ 78. This spine assists with dispersing light into the intraoral cavity, just like the stated goal of Park. EX1006, Abstract; EX1012, ¶ 78. In addition to light transmission assistance, the spine 365 would increase mouthpiece rigidity, particularly where upper and lower ridges, behind the molars, engage the concave portion 131 of Park.

185. A POSA would have been motivated to include the spine of Hirsch into the mouth prop of Park (if Park doesn't already have a spine) to increase rigidity and help transmit light into the entire oral cavity. Because Hirsch and Park

both discuss light transmission, a POSA would have expected success in using a spine to disperse light throughout the oral cavity. Moreover, the designs of Park and Hirsch are very similar – Hirsch simply lacks a sidewall that Park discloses. Also, the spine 365 would provide added anti-collapse rigidity throughout the center of the mouth prop. The increased rigidity would also help with retracting cheek tissue as the increase in rigidity due to a spine would provide added memory to push back against cheek tissue. EX1005, 7:21-39. Lastly, no additional modifications are required because Park already teaches a pair of suction ports 112 that are divided where the spine 365 would be formed.

E. Ground 4: Claims 13 and 15 are obvious under 35 U.S.C. 103 by Park in view of Baughan, Johnson, and Black.

1. Claim 13: "13. The dental mouthpiece of claim 1, wherein the first wall of the main body portion and the second wall of the main body portion have different thicknesses."

186. It is unclear whether the anterior and posterior walls of Park have different thicknesses. Nevertheless, it would have been obvious to make one of the walls thicker in view of Black. Black teaches a longitudinal stiffener 347 that prevents kinking when the tongue shield is flexed and/or bent for placement within the oral cavity. EX1005, 15:63-16:37, FIG. 23C. Thus, a POSA would have been motivated to include a longitudinal stiffener on either the anterior or posterior wall of Park to prevent kinking when the mouth prop 100 of Park is flexed and/or bent

for placement within the oral cavity. Moreover, a POSA would have been motivated to increase the rigidity of the mouth prop 100 of Park to increase cheek retraction. EX1005, 7:21-39. A POSA would have expected success since my patent disclosed the predictable results of making one of the anterior or posterior walls thicker.

187. By adding a longitudinal stiffener to, say, the posterior wall of Park, the posterior wall of Black would have a different thickness than the anterior wall of Park.

2. **Claim 15: "15. The dental mouthpiece of claim 14 wherein the mouth prop comprises a bite block portion that includes an opening corresponding to a plug connected to the main body."**

188. Black teaches a removable bite block having a groove 311 formed within a wall of the bite member's conduit 312, and the groove 311 receives a projection 344 formed on the neck of the tongue shield aspirator 340, which is a suction connector. EX1005, 15:36-51.

189. A POSA would have been motivated to make the bite block removable to accommodate different sized mouths so that one bite block of one size could be replaced by a second bite block of another size. EX1005, 9:36-38, 9:50-52. Once motivated to make a bite block removable, a POSA would have

been motivated to follow my groove/projection keying method to prevent rotation of the bite block and ensure proper placement. EX1005, 15:46-51.

F. Ground 5: Claim 19 is obvious under 35 U.S.C. 103 by Black in view of Hirsch.

1. Claim 19

190. To the extent the Board does not agree that my patent unequivocally teaches projections formed in the anterior and posterior layer, as clearly shown in at least FIG. 4C, it would have been obvious to add perforations in view of Hirsch. EX1012, ¶ 79, FIGs. 19A, 19E. Hirsch explains that perforations formed in the anterior and posterior flaps allow for suction through the anterior and posterior flaps, not just the inferior and superior sides. EX1012, ¶ 79. It would have been obvious to include perforations on the anterior and posterior layers 348a/b of Black to predictably allow for suction through those sides of the mouthpiece.

Docusign Envelope ID: DD38B520-DA9A-4B03-89DC-3D55C83A37DB

IX. CONCLUSION

191. For these reasons, it is my opinion that claims 1-4 and 6-19 of the ’969 Patent are unpatentable.

* * *

Pursuant to 28 U.S.C. § 1746, I declare under penalty of perjury under the laws of the United States of America that the foregoing is true and correct.

Executed on this 19.00 day of May, 2025.

Dr. Brian P. Black.