UNITED STATES PATENT AND TRADEMARK OFFICE

BEFORE THE PATENT TRIAL AND APPEAL BOARD

ASCENTCARE DENTAL PRODUCTS, INC.
Petitioner

v.

SOLMETEX, LLC
Patent Owner

Patent No. 11,589,970
Issue Date: February 28, 2023
Title: INTRAORAL DEVICE WITH DETACHABLE MOUTH PROP

Inter Partes Review No. IPR2025-01057

PETITIONER'S RESPONSE TO PATENT OWNER'S BRIEF ON DISCRETIONARY DENIAL

TABLE OF AUTHORITIES

Cases **Page(s)**

Advanced Bionics LLC v. MED-EL Elektromedizinische Geräte GmbH, IPR2019-01469, Paper 6 (PTAB Feb. 13, 2020) 5, 6, 12

Amgen, Inc. v. Bristol-Myers Squibb Co., IPR2025-00601, Paper 9 (July 24, 2025) 16

Apple Inc. v. Fintiv, Inc., IPR2020-00019, Paper 11 (PTAB Mar. 20, 2020) 20

Becton, Dickinson & Co. v. B. Braun Melsungen AG, IPR2017-01586, Paper 8 (PTAB Dec. 15, 2017) 6

Samsung Electronics Co., Ltd. V. Dynamics, Inc., IPR2020-00502, Paper 34 (PTAB August 12, 2020) 23

Sotera Wireless, Inc. v. Masimo Corporation (§ II.A), IPR2020-01019, Paper 12 (December 1, 2020) 22, 23

Statutes

35 U.S.C. § 311(b) 18

35 U.S.C. § 316(a)(11) 21

35 U.S.C. § 325(D) 5

Other Authorities

EXHIBIT INDEX

Ex #	Exhibit
1001	U.S. Patent No. 11,589,970 ("the '970 Patent")
1002	Prosecution History of the '970 Patent (part 1)
1003	Expert Declaration of Dr. Brian P. Black
1004	*Curriculum Vitae* for Dr. Brian P. Black
1005	U.S. Patent No. 8,029,280 to Black ("Black")
1006	Korean Patent No. 10-1082826 ("Park")
1007	U.S. Patent No. 3,101,543 ("Baughan")
1008	U.S. Patent No. 4,017,975 ("Johnson")
1009	Solmetex's Complaint for Patent Infringement against Ascentcare (ECF No. 1), filed September 16, 2024
1010	Service of Summons and Complaint upon Ascentcare (ECF No. 8), served December 10, 2024.
1011	Solmetex Infringement Contentions
1012	U.S. Patent Application No. 2003/0134253 ("Hirsch")
1013	Korean Patent No. 10-0654392
1014	U.S. Patent No. 8,911,232
1015	Prosecution History of U.S. Patent No. 8,911,232
1016	U.S. Patent No. 4,024,642
1017	U.S. Patent No. 1,731,322
1018	U.S. Patent No. 6,575,746
1019	U.S. Patent No. 9,532,858
1020	Prosecution History of the '970 Patent (part 2)
1021	Prosecution History of the '970 Patent (part 3)

1022	Excerpt from Prosecution History of U.S. Patent No. 11,589,969
1023	RESERVED
1024	RESERVED
1025	RESERVED
1026	Excerpt from Prosecution History of U.S. 11,744,686
1027	Ascentcare's Responsive Letter to Solmetex's Cease and Desist Letter
1028	Rule 16 Scheduling Conference Transcript
1029	Ascentcare's *Sotera* Stipulation
1030	Excerpt from Declaration of Professor Charles Garris, Ph.D Regarding Claim Construction
1031	Order Regarding Motion to Stay
1032	Various Excerpts from Prosecution History of U.S. Patent No. 11,589,969

Pursuant to the Interim Processes for PTAB Workload Memorandum ("Memo") dated March 26, 2025, Petitioner Ascentcare Dental Products, Inc. ("Petitioner") submits its reply brief to Patent Owner's Solmetex, LLC ("Patent Owner") discretionary denial brief for Director review.

I. INTRODUCTION

For the reasons set forth below, the Board should not discretionarily deny the petition. To start, the petition presents a new, non-cumulative reference — Park — which is used to reject all challenged claims. Next, the Office materially erred by not fully appreciating Baughan's teachings of a wave-shaped bridge structure. Additionally, the Petitioner's settled expectations favor institution. Finally, the *Fintiv* factors also favor institution.

II. 35 U.S.C. § 325(D)

35 U.S.C. § 325(d) allows the Board to discretionarily deny a petition because the same or substantially the same prior art or arguments were previously presented to the Office. The Board uses a two-part framework to determine whether to exercise this discretion: (1) whether the same or substantially the same art previously was presented to the Office or whether the same or substantially the same arguments previously were presented to the Office; and (2) if either condition of the first part of the framework is satisfied, whether the petitioner has demonstrated that the Office erred in a manner material to the patentability of the challenged claims. *Advanced*

Bionics LLC v. MED-EL Elektromedizinische Geräte GmbH, IPR2019-01469, Paper 6 (PTAB Feb. 13, 2020) (Precedential).

The Board has enumerated the following factors to consider in exercising discretion pursuant to § 325(d):

a) the similarities and material differences between the asserted art and the prior art involved during examination;

b) the cumulative nature of the asserted art and the prior art evaluated during examination;

c) the extent to which the asserted art was evaluated during examination, including whether the prior art was the basis for rejection;

d) the extent of the overlap between the arguments made during examination and the manner in which Petitioner relies on the prior art or Patent Owner distinguishes the prior art;

e) whether Petitioner has pointed out sufficiently how the Examiner erred in its evaluation of the asserted prior art; and

f) the extent to which additional evidence and facts presented in the Petition warrant reconsideration of the prior art or arguments.

Becton, Dickinson & Co. v. B. Braun Melsungen AG, IPR2017-01586, Paper 8 at 17–18 (PTAB Dec. 15, 2017) (precedential as to § III.C.5, first paragraph). In view of this standard, the Board should institute IPR on all challenged claims.

A. ***Advanced Bionics* Framework Part 1**

1. **Park is a new, non-cumulative reference**

Patent Owner admits that Park has not previously been considered by the Office but argues that Park is substantially cumulative of Hirsch and Black, which

were considered during prosecution. Paper 6, pp. 1. However, Park cannot be substantially the same Black and Hirsch because Park teaches features that Patent Owner specifically argued were missing from the Black and Hirsch.

To begin, none of the prior art references cited during prosecution or in any IDS shows a four-sided dental isolation mouthpiece, which Park specifically teaches. EX1006, FIG. 2; EX1003, ¶ 113.

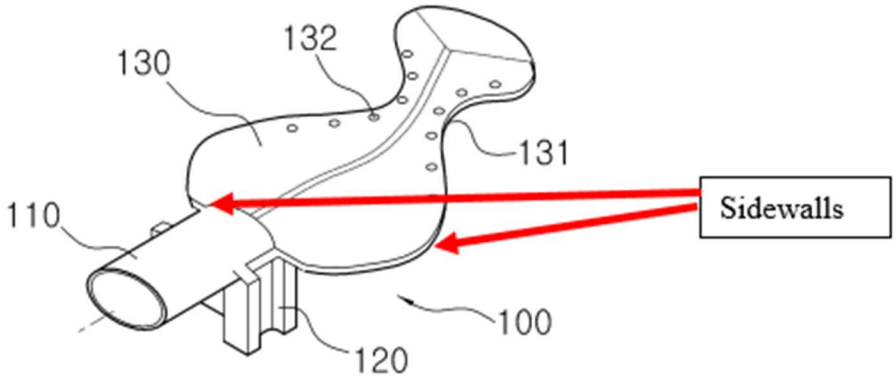

In its brief, Patent Owner argues that Park is cumulative of Hirsch because Hirsch's first embodiment discloses sidewalls. EX1002, 388 (finding that Hirsch '129 discloses "a side wall, i.e., any connecting material at edge 54"); *see also* EX1020, 219 (finding that in Hirsch '129 discloses "a connect wall 62/64 that connects the first wall 50 and second wall 24 cross a span therebetween"); Paper 6, pp. 24-26.

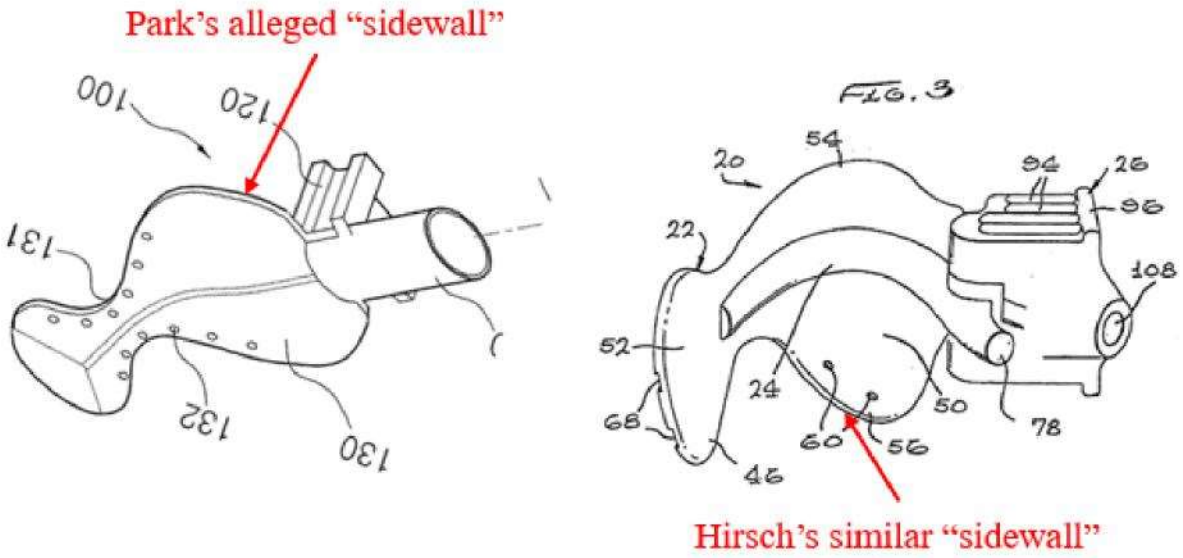

Ex. 1006, FIG. 2 (Park) (rotated and annotated); Ex. 1012, FIG. 3 (Hirsch) (annotated)

However, Patent Owner repeatedly throughout the prosecution history argued that Hirsch does **<u>not</u>** disclose sidewalls. For example:

> Exemplary superior wall and inferior walls are shown in Figures 1A and 4 (provided below). The *Office Action* points to *Hirsch*'s component "54" and "any connecting material at edge 54" as purportedly teaching the claimed side wall, now amended to superior wall and additionally an inferior wall, and component "58A" as purportedly teaching the claimed plurality of perforations, shown below in Figure 10 and Figure 5. *Office Action*, 4. *Hirsch* refers to component 54 as "an upper roof portion" and to component 58A as "internal evacuation channels." *Hirsch*, [0047].

HIRSCH	APPLICANT
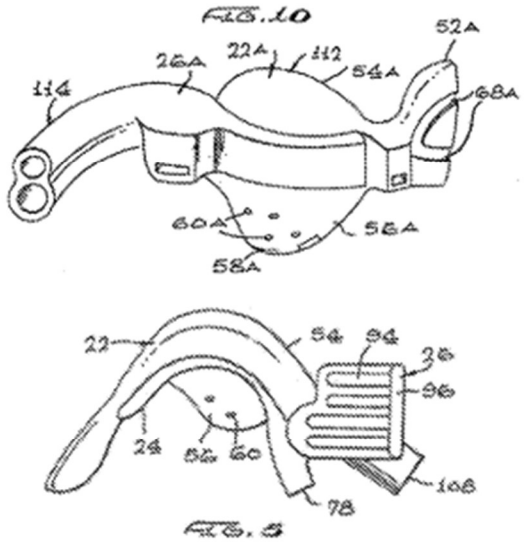	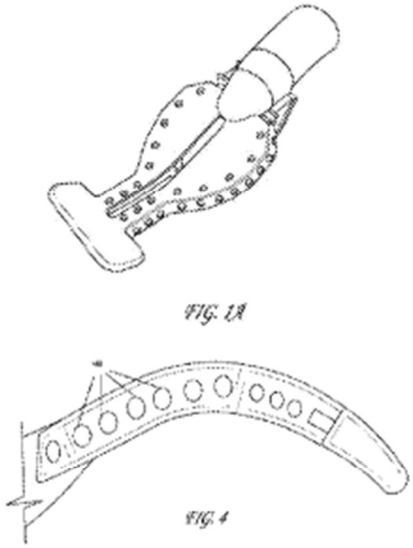

As illustrated above, component 54 is not an edge of a specific wall that is attached to another edge of another specific wall, but rather an "upper roof portion", as more clearly shown in Figure 5. Thus, *Hirsch* does not disclose a **superior wall spanning a distance between the anterior wall and the posterior wall** and that **is less than the anterior wall width**. Nor does *Hirsch* disclose an **inferior wall spanning a distance between the anterior wall and the posterior wall on a second side** and that **is less than the anterior wall width**.

EX1032, pp. 4-5.

Patent Owner later argued again that Hirsch does not teach the claimed sidewalls, stating that Hirsch "fails to teach any defined walls spanning across set distances as does the claimed superior and inferior [side]walls." EX1032, pp. 13-15.

Similarly, Patent Owner argues that Park is cumulative of Black because Black teaches sidewalls. However, Patent Owner spent years telling the Office that Black does **not** teach sidewalls. Paper 6, pp. 17-18. For example:

> On the contrary, paragraph 82 of *Black* indicates that there is no side wall. In particular, *Black* teaches that "top edge 40c of the proximal flap may be formed by the respective top edges of the posterior layer 48a and the anterior layer 48b," indicating that the edges are connected directly rather than via a distinct 'side wall,' as claimed. *Black* therefore fails to teach any 'side wall' (with perforations) that connects the anterior wall edge to the posterior wall edge.

EX1032, p. 1. And again:

> Indeed, the Examiner concedes that *Maycher* does not teach a rectangular portion and relies on *Black* to teach this feature. *Office Action*, pg. 3. However, *Black* does not cure the deficiencies of *Maycher*. *Black* teaches a tongue shield aspirator for fluid removal during a dental procedure. *Black*. at Abstract. *Black* teaches flaps connected by transverse walls located between each flap. *Id.* at para. [0079] - [0080]. Nowhere does *Black* teach an **interior open space defined by** a defined shape of **an anterior wall**, a corresponding shape of **a posterior wall**, **a superior wall** connecting an exterior edge of the anterior wall to a corresponding exterior edge of the posterior wall, and **an inferior wall** connecting the exterior edge of the anterior wall to the corresponding exterior edge of the posterior wall**, and an interior open space of a pocket that**
>
> 8
>
> 66494680.1
>
> **153 of 502**
>
> *Patent*
> *Atty Dkt No. 084892-514253*
> *Filed Via EFS*
>
> **extends into a rectangular portion**. As such, neither *Black* nor *Maycher* together or separately teach the feature of an interior open space defined by a defined shape of an anterior wall, a corresponding shape of a posterior wall, a superior wall connecting an exterior edge of the anterior wall to a corresponding exterior edge of the posterior wall, and an inferior wall connecting the exterior edge of the anterior wall to the corresponding exterior edge of the posterior wall, and an interior open space of a pocket that extends into a rectangular portion.

EX1020, pp. 9-10.

By Patent Owner's own admission, Park cannot be cumulative of Hirsch and Black because Park teaches the sidewalls that Patent Owner argued Hirsch and Black do not teach. In other words, Park cures the alleged discrepancies of Hirsch and Black, rendering Park particularly relevant now. Patent Owner's representations to the Office now *directly contradict* its representations to the Office during prosecution. Patent Owner obtained the '970 Patent by arguing that Black and Hirsch do not teach sidewalls. Now, in an attempt to avoid *inter partes* review, Patent Owner argues the exact opposite. This theme of duplicity is exactly why the Board should not exercise discretionary denial.

1. **Baughan is a new, non-cumulative reference**

Baughan is also a new reference. While there is some discussion of Baughan in the file history of the sister '969 Patent, Patent Owner notably did not cite Baughan in an IDS in the prosecution history of the '970 Patent, and the record is unclear how the Examiner was using Baughan. EX1032, pp. 18-20. Indeed, Baughan is only mentioned by Patent Owner. We have no record of how the Examiner understood or applied Baughan.

Patent Owner argues that Baughan is cumulative of Krouzian. However, Krouzian never teaches that the bars 24 are used as an anti-collapse mechanism. EX2004, 4:3-14. Moreover, the alleged wave shape identified by Patent Owner

(Paper 6, p. 17) is not taught as preventing collapse, which Baughan expressly teaches. Instead, Krouzian is concerned with patient comfort. EX2004, 4:15-18. Thus, while Krouzian and Baugh may be directed to the same type of device, the teachings relied upon are not cumulative. Even if they were cumulative, the Examiner never used Krouzian in the way proposed by Petitioner.

More notably, Patent Owner argued that Krouzian does not teach a wave shape despite having *curvature*, which again refutes the claim construction they propose as saving the validity of the '970 Patent.

B. ***Advanced Bionics* Part 2**

Since Part 1 of *Advanced Bionics* is not satisfied for the reasons discussed above, the Board need not continue to Part 2. *Advanced Bionics*, 8. However, if the Board reaches Part 2, discretionary denial is inappropriate because the examination involved multiple material errors, each discussed below.

1. **Wave shape**

Second, the Office materially erred by not considering that the claimed "wave-shape" of the bridge structure could be taught by a square wave shape.

The "wave" shape of the bridge structure is simply recited in the claim as having one or more alternating crests and one or more troughs. The specification explains that crests project upward through the interior space between the first and second walls to act as anti-collapse structure, and the troughs are "flush to the

surface" of the second wall to allow for suction. EX1001, 4:52-63. Nowhere in the specification or claims of the '970 Patent does it limit the wave shape to a certain type of wave shape, (sinusoidal, triangular, sawtooth, etc.). As such, *any* shape that alternates between crests and troughs is necessarily a "wave-shape". A square wave alternates between crests and troughs.

Patent Owner, afraid of invalidity, now suggests that the claim language necessarily means the recited "wave shave" has curves. Patent Owner argues that the term "one or more crests and one or more troughs" implies a curved wave shape. EX1030, ¶ 37. However, this conclusion is extremely illogical. A square wave or a triangle wave can equally have one or more crests and one or more troughs. This limitation simply specifies the *number* of crests and troughs in the wave shape. Indeed, even a curved wave-shape can have (1) multiple crests and only a single trough, (2) multiple troughs and only a single crest (3) or one crest and one trough (see below).

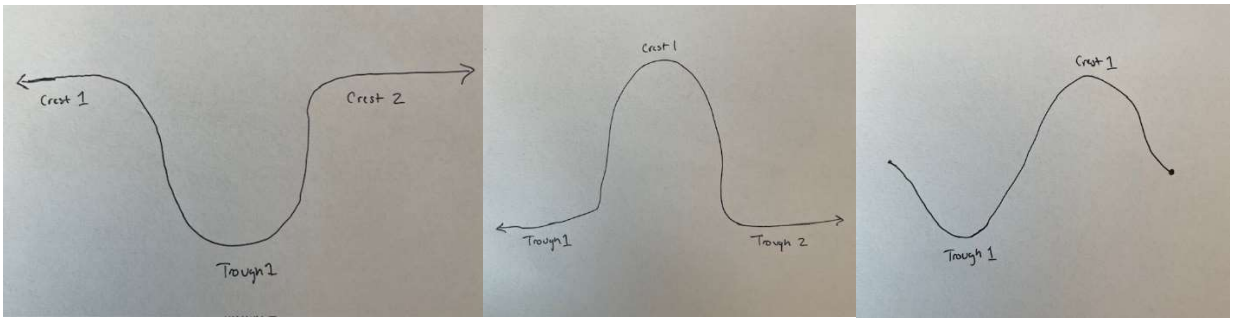

All these shapes drawn above are still wave shapes, and the claim language covers all of these options by specifying that the wave shave includes "one or more crests and one or more troughs." The point is a wave shape having "one or more crests and one or more troughs" does not necessarily mean that the wave shape is curved, it simply means that the wave shape can have **<u>one or multiple</u>** crests and **<u>one or multiple</u>** troughs. Any other interpretation would be reading in limitations from the specification, which is flatly improper. *Altiris Inc. v. Symantec Corp.,* 318 F.3d 1363 (Fed. Cir. 2003).

Baughan teaches that the spaced-apart discs 17 or the notches 19 result in a square wave shape having crests and troughs. EX1007, FIG. 3 (annotated below), FIG. 5 (annotated); EX1003, ¶ 112.

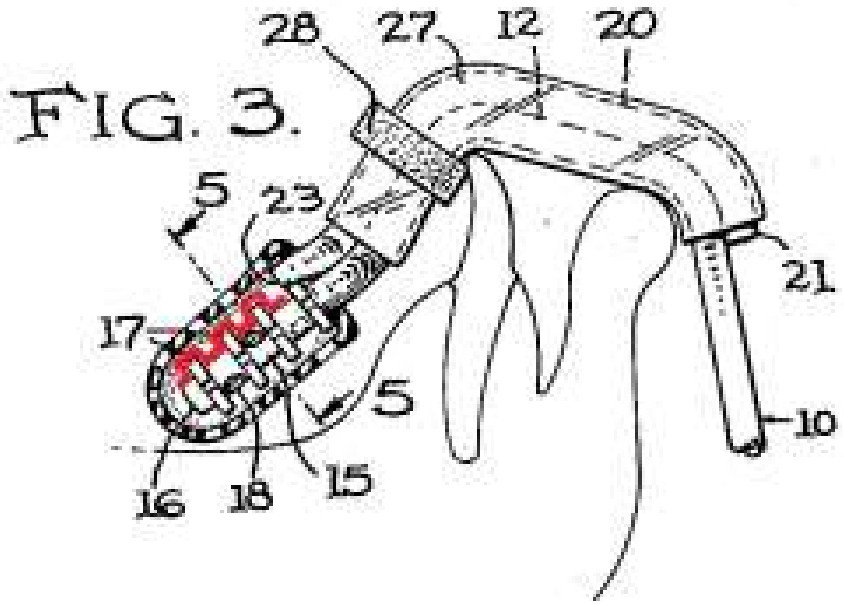

There is no evidence that the Examiner considered Baughan for its teaching of wave shape. The only evidence in the record of Baughan at all is when Patent Owner mentions in an amendment that the Examiner brought up Baughan in an examiner interview. EX1032, pp. 18-20. The Examiner should have used Baughan with other references (e.g., Hirsch or Park) and should have considered the square wave shape shown to be a wave shape.

Patent Owner now takes the position that a "wave-shape with alternating crests and trough" means "a pattern of curved surfaces between the one or more crests and the one or more troughs." EX1030, ¶ 37. However, such a construction would require a disclaimer in the claim language or prosecution history, and this new construction certainly is not the broadest reasonable interpretation standard that the Examiner should have been applying throughout prosecution. Indeed, square waves, triangle waves, and sinusoidal waves all have crests and troughs (and can have one or more crests and one or more troughs), but only sinusoidal waves have curves. If

Patent Owner intended to limit themselves so narrowly, they should have made clear to the public and POSITAs that the "wave shape" is a curved wave or a sinusoidal wave shape. Patent Owner cannot now change the construction of "wave shape" now that they are afraid of an invalidity ruling.

It can only be explained as a material error by the Office that the Examiner did not assert Baughan as teaching a wave shaped bridge structure in the '970 Patent because a square-wave shape is necessarily a wave-shape having alternating crests and troughs.

III. **SETTLED EXPECTATIONS**

The settled expectations of the parties uniquely warrant ***institution*** of the IPR in this circumstance. Patent Owner, for over eight years[1] and through multiple applications, pursued protection for a dental isolation mouthpiece with enclosing sidewalls connecting the inferior edge of an anterior wall to the inferior edge of a posterior wall and/or connecting the superior edge of an anterior wall to the superior edge of a posterior wall, as clearly shown in FIG. 1A (and all other figures in the specification). EX1014, claim 1; EX1002, pp. 30 and 77.

[1] Longer than the critical six year timeframe identified by the Director in multiple opinions. *Amgen, Inc. v. Bristol-Myers Squibb Co.*, IPR2025-00601, Paper 9 at 2-3 (July 24, 2025).

After more than 6 years of Patent Owner exclusively claiming a *sidewalled* mouthpiece, both in issued patents and during prosecution, Petitioner developed and launched its own non-infringing, *open-sided* mouthpiece. Petitioner's product is similar to Hirsch, a reference which Patent Owner argued was different than its claimed mouthpiece. As such, Petitioner understood Patent Owner's mouthpiece to be limited to a sidewalled mouthpiece. Based on this understanding, Petitioner spent significant sums on engineering costs, creating molds, and testing products that specifically lacked enclosing sidewalls. Petitioner relied upon and had a settled expectation that a mouthpiece without sidewalls could not infringe or be accused of infringing any patent in the same family as the '232 Patent.[2]

Shortly after Petitioner launched its product, Patent Owner conspicuously and dramatically shifted its claim language to remove the sidewall limitation entirely. The '970 Patent, and all of its subsequent continuation applications, no longer recite "sidewalls." Rather, they recite a "connecting wall," which, according to Patent Owner, can be any structure that connects anterior and posterior walls, including even *an integral bite block* (something Patent Owner never envisioned, given the requirement that a mouth prop be detachable, as spec cites)[3]. EX1011, p. 7.

[2] Notably, Patent Owner has not accused Petitioner of infringing any claim that uses the word "sidewall"

[3] Patent Owner's claim construction is clearly wrong in view of the specification and prosecution history, but Patent Owner's unreasonable positions have caused

Petitioner, in developing its own product, relied on Patent Owner's patents only reciting mouthpieces with enclosing sidewalls. Thus, Petitioner had settled expectations that, in 2020, an open-sided mouthpiece with a central spine was not within the language of Patent Owner's disclosure. *See also* EX1032, p. 12. (Patent Owner disclaims a central spine). As such, Petitioner's settled expectations uniquely favor institution in this circumstance where a Patent Owner is improperly attempting to expand claim language long, long after the original disclosure.[4]

Patent Owner's attempts to argue that settled expectations warrant denial are unpersuasive. First, Patent Owner attempts to argue that it has settled expectations because prosecution of the '970 Patent lasted ***almost 9 years***. Paper 6, pp. 41-42. However, this misconstrues the guidance given in the Director's Memo, which states that the Board may consider the "[s]ettled expectations of the parties, *such as the length of time the claims have been in force*." The '970 Patent issued on February 8, 2023, meaning that the claims have been in force for less than 3 years. Moreover, these claims are different in claim language from the original claim language

---

Petitioner significant resources to fight, further demonstrating Petitioner's settled expectations.

[4] Although not an issue for IPR, this claim language is also unsupported by the specification, which may further favor institution, should the Director choose to consider whether the specification supports the claim language, as interpreted by Patent Owner, purely for the purposes of discretion, but not for validity. 35 U.S.C. § 311(b).

presented, so the length of time since the filing date is irrelevant.[5] Patent Owner has developed no settled expectations with regard to the '970 Patent.

Next, Patent Owner argues that it has settled expectations based on a cease-and-desist letter sent in May 2023. Paper 6, pp. 39-41. In making this argument, Patent Owner ignores that Petitioner responded to that letter within one month clearly explaining why it did not infringe the '970 Patent *and* that the patents were invalid. EX1027. Patent Owner could not have developed settled expectations after being notified that the patents were likely invalid, particularly given the strained reading of the claims necessary to allege infringement. *Id.* Regardless, Petitioner challenged the '970 Patent less than two years after its issuance, which according to the Director not enough time for a patent owner to develop settled expectations. The Director has issued no guidance that Settled Expectations timing is sped up by the mere sending of a meritless cease-and-desist letter.[6]

---

[5] Of note, the '232 Patent is not, and could not be, asserted against Petitioner in the corresponding district court litigation.

[6] Moreover, between the filing fees for an IPR petition and the legal costs to draft the petition, it is extremely expensive to challenge an issued patent. For smaller companies, an IPR petition is simply not a realistic option at all or, at best, as a last resort. This, and for many other reasons, are why the Director's new "Settled Expectations" precedent is prejudicial to small companies with limited legal spend. At the very least, the Director should consider the size and financial resources of the respective entities when evaluating the parties respective Settled Expectations.

IV. THE *FINTIV* FACTORS COUNSEL AGAINST EXERCISING DISCRETION TO DENY

The Board considers six factors to determine whether to deny institution based on one or more parallel proceedings:

1. whether the court granted a stay or evidence exists that one may be granted if a proceeding is instituted;
2. proximity of the court's trial date to the Board's projected statutory deadline for a final written decision;
3. investment in the parallel proceeding by the court and the parties;
4. overlap between issues raised in the petition and in the parallel proceeding;
5. whether the petitioner and the defendant in the parallel proceeding are the same party; and
6. other circumstances that impact the Board's exercise of discretion, including the merits

Apple Inc. v. Fintiv, Inc., IPR2020-00019, Paper 11 at 5-6 (PTAB Mar. 20, 2020) (Precedential). Weighing the *Fintiv* factors holistically, the Board should decline to exercise its discretion to deny institution.

A. Factor 1

On September 3, 2025, the District Court denied Petitioner's Motion to Stay filed on July 11, 2025. Moreover, the Court ruled that a stay could not be granted "at this time" leaving the door open for granting another stay motion should the PTAB institute IPR. EX1031, p. 6. The factor is either neutral or weighs against institution.

B. Factor 2

This factor weighs heavily against discretionary denial because the Parallel Litigation is at a very early stage. In particular, the District Court has not set a trial date. EX2007. As such, there can be no comparison, other than mere speculation, between the IPR conclusion and the parallel litigation's trial date, which Factor 2 specifically notices. Thus, Factor 2 strongly favors institution.

If an IPR is instituted, the Board would need to issue its final written decision by December 18, 2026. 35 U.S.C. § 316(a)(11). Patent Owner filed its initial complaint in the Parallel Litigation on September 16, 2024. As Patent Owner points out in its Brief on Discretionary Denial, the median time to trial in the Western District of Michigan in patent cases is 48 months. Paper 6, p. 36. Thus, by Patent Owner's own admission, the Board's final written decision will likely issue well before any trial date.

Patent Owner points to the Schedule set in the Parallel Litigation — specifically, the January 2026 fact discovery cutoff — to show that trial will *likely* occur before the Board's final written decision deadline in December 2026. However, the judge in the Parallel Litigation, Judge Jonker, has admitted that the Schedule is "a little ambitious given the scope of the case." EX1028, p. 30:12-16. It is extremely likely that the dates in the Schedule will be pushed back and that any trial date, even if it occurs sooner than the 4-year median time to trial, will be after the Board's final written decision deadline. Indeed, Petitioner fully expects Patent Owner to adjust the

schedule should it be successful in obtaining discretionary denial. Patent Owner has opposed any schedule changes so far only to preserve its § 314 discretion arguments.

This factor therefore weighs heavily against discretionary denial.

C. **Factor 3**

This factor weighs heavily against discretionary denial because the Parallel Litigation is at a very early stage. As of the filing of this brief, the parties have only exchanged proposed claim constructions and have not yet conducted a *Markman* hearing or completed fact discovery. No depositions have occurred. Patent Owner points to the Schedule set in the Parallel Litigation to attempt to show that significant progress in the Parallel will likely occur before the Board's decision to institute. However, as stated above, Judge Jonker, has admitted that the Schedule is "a little ambitious given the scope of the case." EX1028, p. 30:12-16. It is extremely likely that the dates in the Schedule will be pushed back and that very little progress will be made in the Parallel litigation before the Board's decision to institute.

D. **Factor 4**

On August 20, 2025, Petitioner filed a *Sotera* stipulation with the District Court stating that if IPR is instituted, it will not pursue in the District Court Litigation any ground raised or that could have been reasonably raised in an IPR. EX1029. Thus, there will be no overlap of invalidity issues between the District Court litigation and IPR. This factor thus weighs heavily in favor of institution. *See Sotera*

Wireless, Inc. v. Masimo Corporation (§ II.A), IPR2020-01019, Paper 12 (December 1, 2020).

E. **Factor 5**

Although Petitioner and Patent Owner are the same parties in both proceedings, the Board nevertheless repeatedly declines to exercise its discretion to deny institution despite this factor. *See e.g., VMWare, Inc.*, Paper 13 at 20-21; *Samsung Electronics Co., Ltd. V. Dynamics, Inc.*, IPR2020-00502, Paper 34 at 13-14 (PTAB August 12, 2020). As such, this factor is neutral.

F. **Factor 6**

This factor heavily favors institution. First, as discussed in the Petition, the merits are exceptionally strong in this case. Under Patent Owner's implied claim construction, the prior art clearly teaches each and every limitation of every challenged claim in the '970 Patent. The Petition cures the errors identified above in Section II.B.1-2, and the Petition asserts a prior art reference that shows what the prior art supposedly lacked, according to Patent Owner itself. This strongly favors institution.

Further still, despite the Examiner finding that a wall connecting the inferior edge of the anterior wall to the inferior edge of the posterior wall and/or the superior edge of the anterior wall to the superior edge of the posterior wall was an *essential element* (EX1020, p. 365-366), Patent Owner now asserts that parties can infringe

the '970 Patent using an integral bite block that connects *no* edge of the anterior and posterior wall. EX1011, p. 7. In a sister application, the Examiner even clarified that he understands an edge to mean either the inferior or superior side, and Patent Owner conceded to this understanding. EX1026. Yet, now granted a patent by the Office, Patent Owner asserts its patent in a way that directly defies the patent scope the Examiner allowed and clearly articulated. EX1026; EX1011, p. 7. Patent owners who tell the Office one thing to get a patent and then assert the patent against the public in a directly contradictory manner do the public a disservice. The Office has an interest in protecting the public from patent owners asserting more than they received from the Office.

Patent Owner now proposes a construction that is illogical to save validity. Patent Owner argues that the claim reciting one or more crests and one or more troughs necessarily means that the claimed wave shape has some curvature, thereby reading out square waves. Paper 7, pp. 17-29. However, as discussed above, this claim language only specifies the *number* of crest and troughs not some unspecified curved shape. Patent Owner's primary arguments for validity rely on this clearly incorrect construction, proving the strength of Petitioner's arguments because Petitioner's arguments do not rely on an illogical claim construction.

In summary, when weighing all the factors together, only one factor (the current lack of a stay) weighs against institution. When weighing the factors together, the factors strongly weigh in Petitioner's favor.

V. **ADDITIONAL CONSIDERATIONS**

Second, Patent Owner attempts to argue, "Dr. Black is ***not*** a POSITA under Petitioner's proposed definition,[6] which is: 'at least a B.S. degree in mechanical engineering or a related field with at least two years' experience designing medical devices.'" Paper 6, p. 44-45. This is an intentional misquotation of Petitioner's proposed definition of a POSITA and intended to make Dr. Black look less credible. Petitioner's full definition of POSITA is "a person with at least a B.S. degree in mechanical engineering or a related field with at least two years' experience designing medical devices. *Less work experience may be compensated by a higher level of education, such as a master's degree, and vice versa.*" Paper 1, p. 26-27. Dr. Black has a Doctor of Dental Surgery Degree, has been a practicing dentist for over 20 years, ***and has spent numerous years designing and pursuing patent protection on his own dental mouthpiece design***.

Further, Patent Owner is aware of Dr. Black's definition of POSITA, which is "a person having at least a degree in mechanical engineering or **dentistry**, with at least 2 years' experience designing dental isolation mouthpieces." EX1003, ¶ 51. His full definition was included in his declaration and is known to Patent Owner.

Moreover, it is a strange argument to suggest that Dr. Black, one of the few and foremost inventors in this narrow field, is not a POSITA. Clearly, his contributions to the field more than make up for any lack of a mechanical engineering degree. The Board should disregard this baseless argument entirely.

Additionally, Patent Owner argues that Dr. Black's testimony should be given little, if any, weight because Dr. Black's testimony is subjective. That statement is flatly incorrect. The testimony identified is Dr. Black explaining a patent *he wrote*. Dr. Black's testimony is a sworn testimony regarding his own perceptions when writing his patent and should be treated as evidence.

Finally, Patent Owner seems to criticize the timing of Petitioner's counsel's IPR preparation. However, Patent Owner neglects to inform the Board that Petitioner's counsel did not represent Petitioner until December 2024. Petitioner's counsel drafted the petitions in just under 5 months, which is a completely reasonable timeline given how much work is involved in IPR petition drafting.

VI. CONCLUSION

The Board should reject Patent Owner's request for discretionary denial and institute an *inter partes* review of the '970 Patent for all of the above reasons.

Respectfully submitted,

Dated: September 23, 2025

By: /Nathan P. Sportel/
Nathan P. Sportel, Reg. No: 67,980
Brandon Griffith, Reg. No: 74,934

Jacob Cowdrey, Reg. No: 81,803
MILLER JOHNSON
45 Ottawa Ave SW, Suite 1100
Grand Rapids, MI 49503
(616) 831-1793 Telephone
(616) 831-1505 Facsimile
sporteln@millerjohnson.com
griffithb@millerjohnson.com

Attorneys for Petitioner
Ascentcare Dental Products, Inc.

CERTIFICATION

The brief excluding the caption, Table of Contents, Table of Exhibits, and this Certification contains 3,979 words. Because Patent Owner's discretionary denial request was due before September 1, 2025, this word count is below the 14,000 limit imposed on replies to discretionary denial requests due before September 1, 2025.

Respectfully submitted,

Dated: September 23, 2025

By: /Nathan P. Sportel/
Nathan P. Sportel
Reg No. 67,980
Lead Counsel for Petitioner

CERTIFICATE OF SERVICE

I hereby certify that on this the September 23, 2025, the foregoing Response to Patent Owner's Brief on Discretionary Denial and all exhibits and other documents filed together with the Petition were served via email to the attorneys of record for the '970 Patent at the following address:

Angelo Christopher, achristopher@nixonpeabody.com
Daniel Burnham, dburnham@nixonpeabody.com
NIXON PEABODY
70 West Madison St., Suite 5200, Chicago, IL 60602

Respectfully submitted,

By: /Nathan P. Sportel/
Nathan P. Sportel
Reg No. 67,980
Lead Counsel for Petitioner