US009532858B2

(12) **United States Patent**
Hirsch

(10) **Patent No.: US 9,532,858 B2**
(45) **Date of Patent: *Jan. 3, 2017**

(54) **INTRAORAL DEVICE AND METHOD OF USE**

(71) Applicant: **Innerlite, Inc.**, Santa Barbara, CA (US)

(72) Inventor: **James A. Hirsch**, Santa Barbara, CA (US)

(73) Assignee: **Innerlite, Inc.**, Santa Barbara, CA (US)

(*) Notice: Subject to any disclaimer, the term of this patent is extended or adjusted under 35 U.S.C. 154(b) by 0 days.

This patent is subject to a terminal disclaimer.

(21) Appl. No.: **15/169,367**

(22) Filed: **May 31, 2016**

(65) **Prior Publication Data**

US 2016/0270890 A1 Sep. 22, 2016

Related U.S. Application Data

(63) Continuation of application No. 14/285,248, filed on May 22, 2014, now Pat. No. 9,358,086.

(51) **Int. Cl.**

A61C 17/06	(2006.01)
A61C 5/14	(2006.01)
A61B 13/00	(2006.01)

(52) **U.S. Cl.**

CPC ***A61C 17/043*** (2013.01); ***A61B 13/00*** (2013.01); ***A61C 5/14*** (2013.01)

(58) **Field of Classification Search**

CPC A61C 17/043; A61C 17/04; A61C 5/007; A61C 5/14; A61C 17/00; A61C 17/14; A61C 19/00

USPC 433/91, 93, 29, 136, 138, 140

See application file for complete search history.

(56) **References Cited**

U.S. PATENT DOCUMENTS

1,122,086	A	12/1914	William	
2,510,125	A	6/1950	Meakin	
2,937,445	A *	5/1960	Erickson	A61B 1/24 433/93
3,090,122	A	5/1963	Erickson	
D210,583	S	3/1968	Westlund	

(Continued)

FOREIGN PATENT DOCUMENTS

GB	1017515	A	1/1966
WO	2008064904	A1	6/2008

OTHER PUBLICATIONS

International Search Report and Written Opinion of PCT/US2015/032219, Korean Intellectual Property Office, Sep. 8, 2015, 16 pages.

(Continued)

Primary Examiner — Nicholas Lucchesi
(74) *Attorney, Agent, or Firm* — Procopio Cory Hargreaves and Savitch LLP

(57) **ABSTRACT**

An intraoral device includes a flexible body having an upper front flap including evacuation holes and a upper edge; an upper rear flap forming an upper pocket with the upper front flap and including internal channels and a upper edge separated from the upper edge of the upper front flap to form an upper pocket opening, the internal channels terminating in grooves along the upper edge; a lower front flap including evacuation holes and a lower edge; a lower rear flap forming a lower pocket with the lower front flap and including internal channels and a lower edge separated from the lower edge of the lower front flap to form an lower pocket opening, the internal channels terminating in grooves along the lower edge.

11 Claims, 10 Drawing Sheets

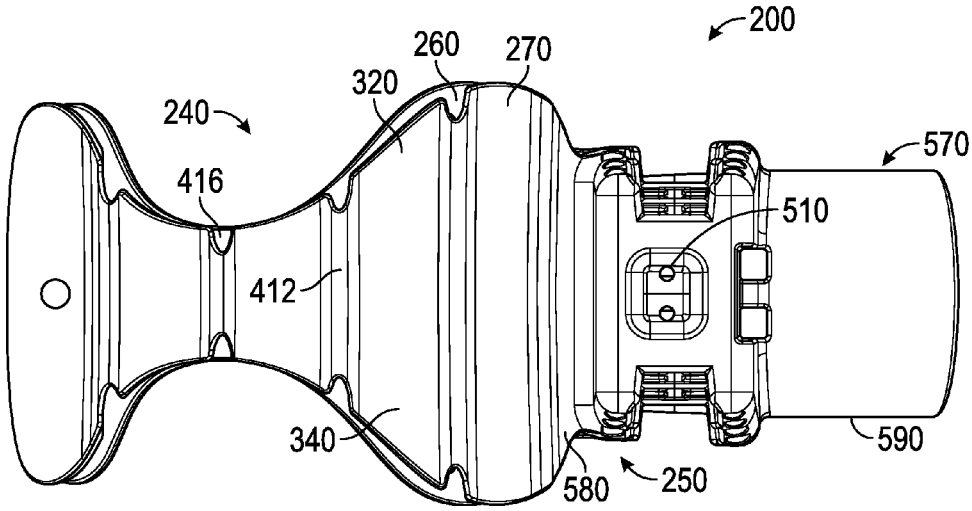

EX1019
Petitioner Ascentcare ('686 Patent)

(56) **References Cited**

U.S. PATENT DOCUMENTS

3,396,468	A	8/1968	Dayhoff	
3,864,831	A *	2/1975	Drake	A61C 17/043 433/91
3,881,254	A	5/1975	Epstein et al.	
4,017,975	A	4/1977	Johnson	
4,024,642	A	5/1977	Zorovich	
4,167,814	A	9/1979	Schubert	
4,240,789	A *	12/1980	Rosenthaler	A61C 17/043 433/136
4,259,067	A	3/1981	Nelson	
4,425,911	A	1/1984	Luomanen et al.	
4,495,945	A	1/1985	Liegner	
4,583,527	A	4/1986	Musicant et al.	
4,592,344	A	6/1986	Scheer	
4,643,172	A	2/1987	Taff et al.	
4,802,851	A	2/1989	Rhoades	
4,865,545	A	9/1989	La Rocca	
D303,834	S	10/1989	Collins	
4,906,188	A	3/1990	Moseley	
4,975,057	A	12/1990	Dyfvermark	
4,992,046	A	2/1991	Sharp	
4,996,976	A	3/1991	Nakagawa	
5,009,595	A	4/1991	Osborn	
5,071,347	A	12/1991	McGuire	
5,078,602	A	1/1992	Honoshofsky	
5,127,411	A	7/1992	Schoolman et al.	
5,152,686	A	10/1992	Duggan	
5,232,362	A	8/1993	Kanas	
5,281,134	A	1/1994	Schultz	
5,366,489	A	11/1994	Burgio et al.	
5,438,976	A	8/1995	Nash	
5,462,435	A	10/1995	Young	
5,496,363	A	3/1996	Burgio et al.	
5,513,986	A	5/1996	Feltham et al.	
5,516,286	A	5/1996	Kushner	
5,588,836	A	12/1996	Landis et al.	
5,725,370	A	3/1998	Himeno et al.	
5,762,496	A	6/1998	Albertsson et al.	
5,769,635	A	6/1998	Eldreth	
5,827,061	A *	10/1998	Goodman	A61C 17/043 433/93
5,873,718	A	2/1999	Sullivan	
5,890,899	A	4/1999	Sclafani	
5,924,866	A	7/1999	Eldreth et al.	
6,022,214	A *	2/2000	Hirsch	A61B 1/24 433/140
6,149,430	A	11/2000	Nemetz et al.	
6,193,513	B1	2/2001	Pancallo	
6,213,772	B1 *	4/2001	Costello	A61C 17/043 433/140
6,244,866	B1	6/2001	Campbell	
6,267,591	B1	7/2001	Barstow	
6,338,627	B2 *	1/2002	Hirsch	A61C 5/14 433/140
6,379,147	B1	4/2002	Georgakis et al.	
6,575,746	B2	6/2003	Hirsch et al.	
6,634,884	B2	10/2003	Phillips	
6,652,276	B2	11/2003	Fischer et al.	
6,655,960	B2	12/2003	Fischer	
6,716,029	B2	4/2004	Fischer et al.	
D491,663	S	6/2004	Bat-Genstein	
6,743,017	B2	6/2004	O'Neill	
D495,799	S	9/2004	Hirsch	
6,908,308	B2	6/2005	Hirsch et al.	
6,939,134	B2	9/2005	Sherry et al.	
6,974,321	B2 *	12/2005	Hirsch	A61C 5/14 433/140
6,981,870	B2	1/2006	Heasley	
7,077,652	B2	7/2006	Kilcher et al.	
D556,327	S	11/2007	Albelda	
7,293,990	B2	11/2007	Hirsch et al.	
7,335,023	B2 *	2/2008	Mahlmann	A61C 17/043 433/136
7,611,354	B2 *	11/2009	Hirsch	A61C 1/088 433/93
7,748,981	B2	7/2010	Hirsch et al.	
8,029,280	B2 *	10/2011	Black	A61C 17/043 433/140
8,057,227	B2	11/2011	Hirsch et al.	
8,057,228	B2	11/2011	Hirsch et al.	
8,075,310	B2	12/2011	Hirsch et al.	
8,297,973	B2	10/2012	Hirsch et al.	
8,852,169	B2 *	10/2014	Milo	A61C 17/043 433/91
8,911,232	B2 *	12/2014	Nguyen	A61C 17/0208 433/136
2004/0033468	A1	2/2004	Fischer	
2006/0063129	A1	3/2006	Hirsch	
2007/0231773	A1	10/2007	Pontynen et al.	
2007/0259307	A1	11/2007	Quan et al.	
2008/0318183	A1	12/2008	Suzman	
2009/0246728	A1 *	10/2009	Hirsch	A61C 5/14 433/36
2011/0311942	A1	12/2011	Black et al.	
2014/0212837	A1	7/2014	Nguyen et al.	
2014/0212838	A1	7/2014	Nguyen et al.	
2014/0212839	A1	7/2014	Nguyen et al.	
2014/0212840	A1	7/2014	Nguyen et al.	
2014/0212841	A1	7/2014	Nguyen et al.	

OTHER PUBLICATIONS

International Search Report and Written Opinion of PCT/US2009/000903, European Patent Office, Jul. 22, 2009, 8 pages.

Frias Rdh, Mark, "*Izolation* vs. *IsoDry*", Jul. 3, 2011, accessed on Jan. 7, 2016 at http://markrdh.com/?p=147, 6 pages.

* cited by examiner

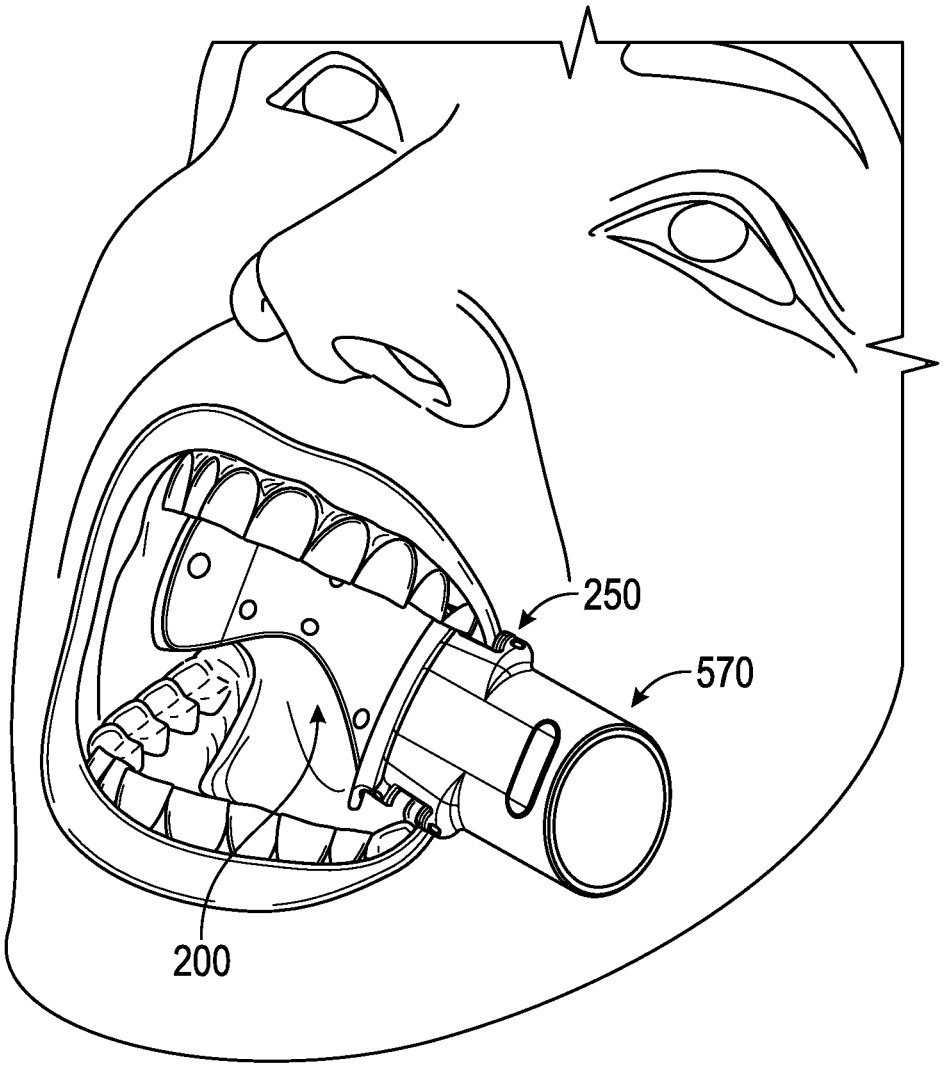

FIG. 1

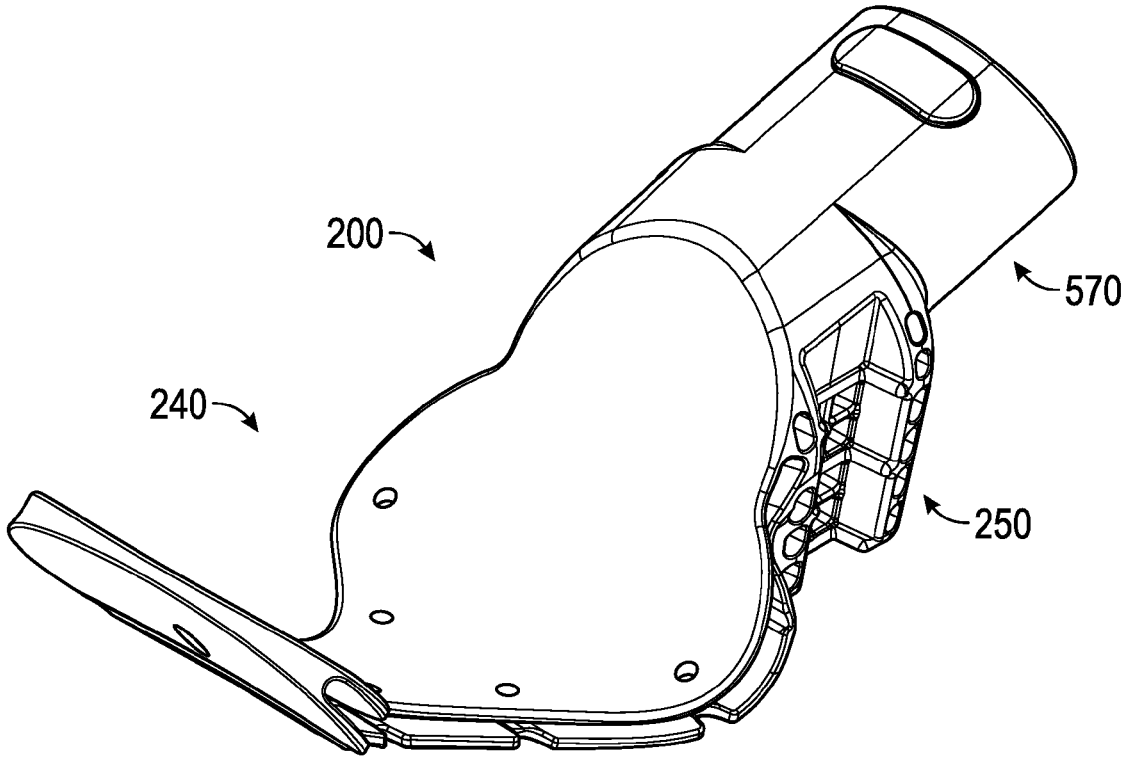

FIG. 2

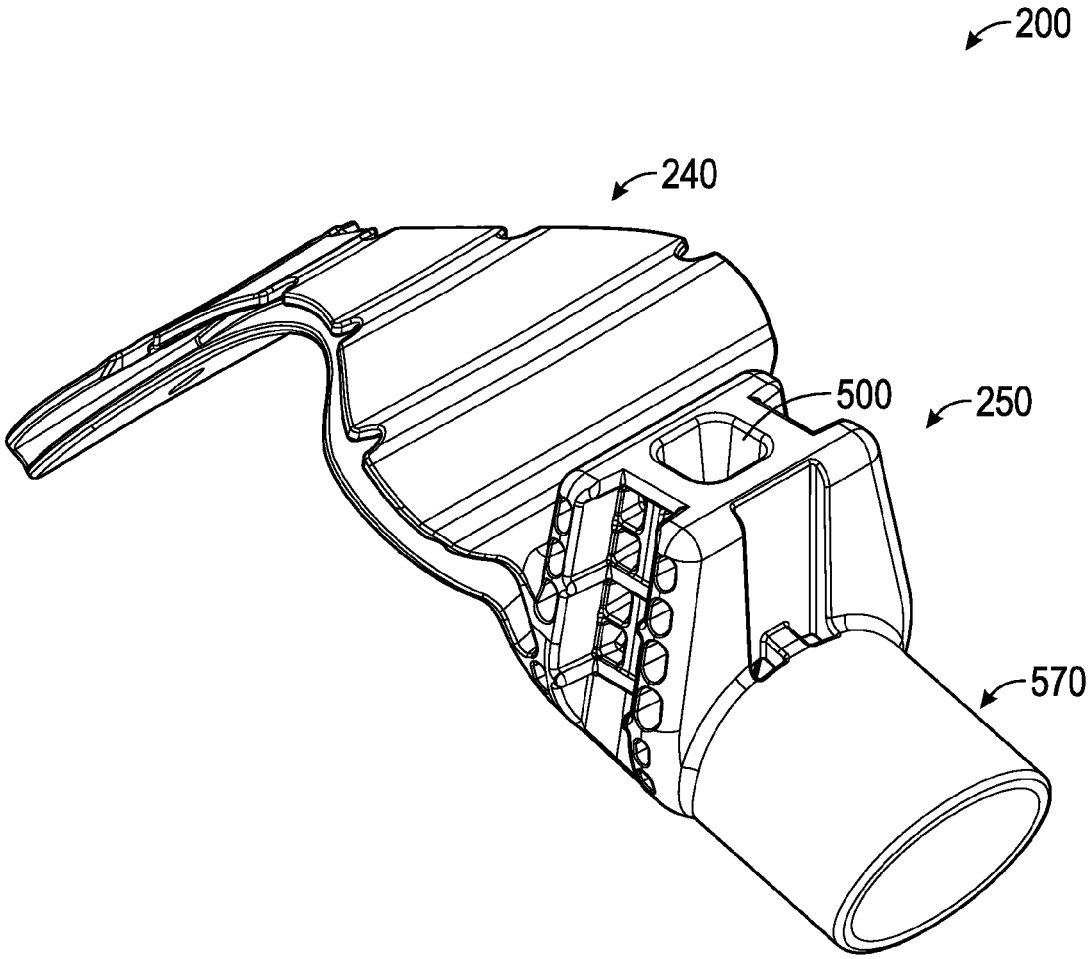

FIG. 3

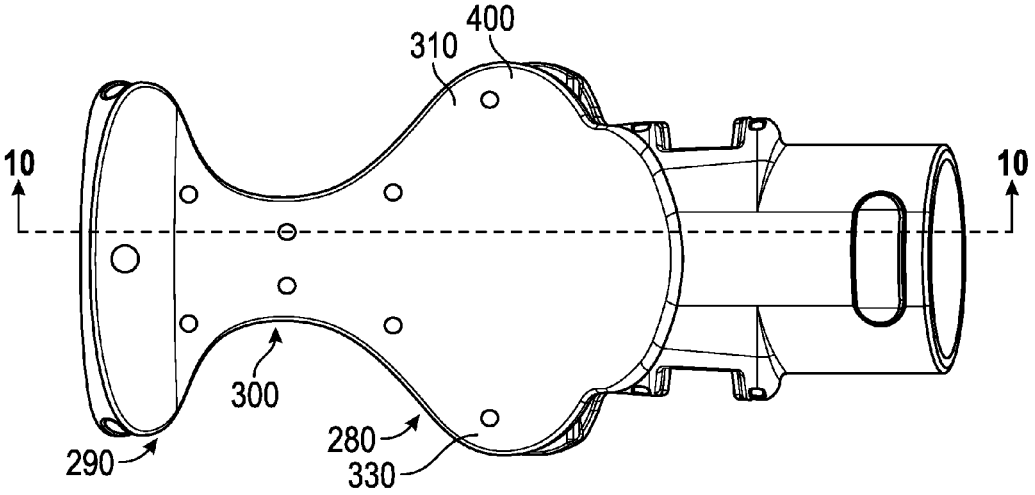

FIG. 4

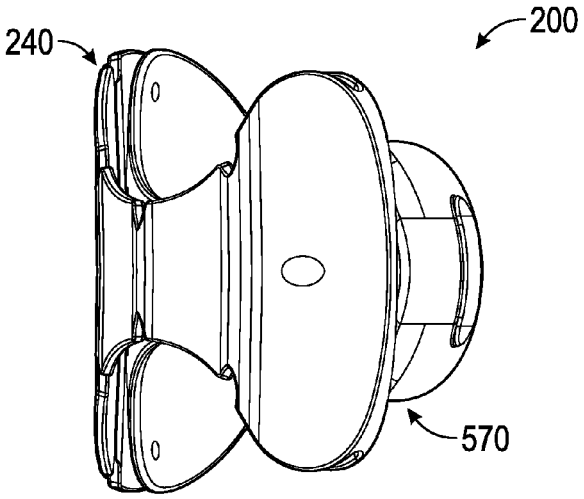

FIG. 5

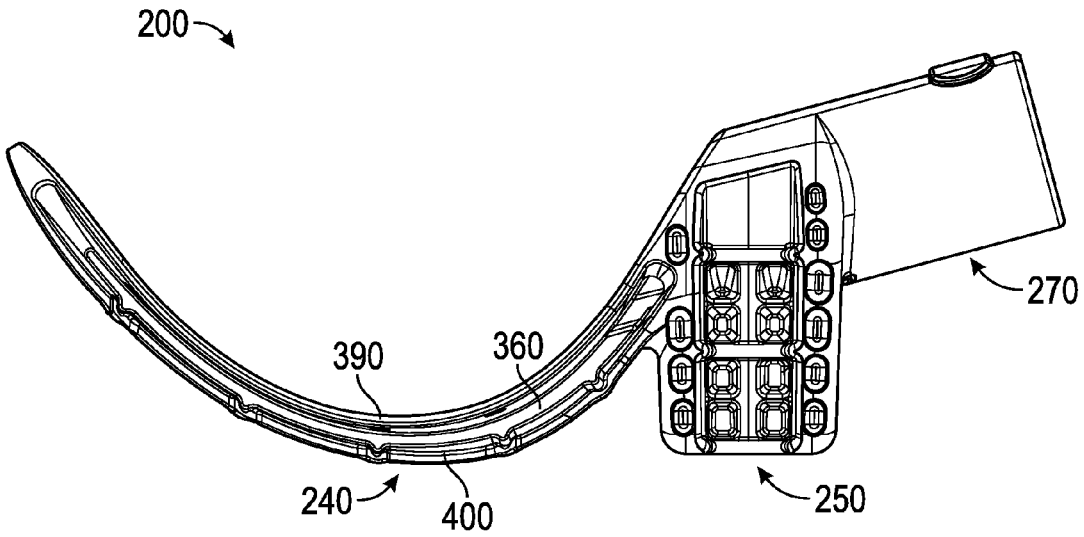

FIG. 6

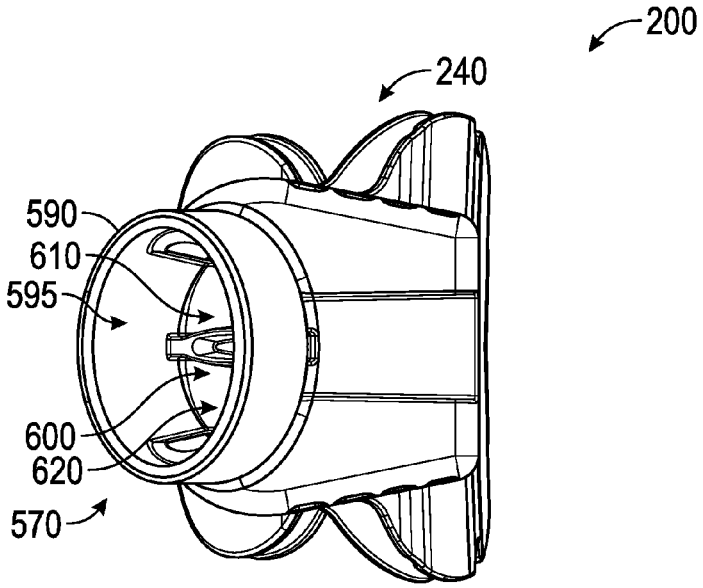

FIG. 7

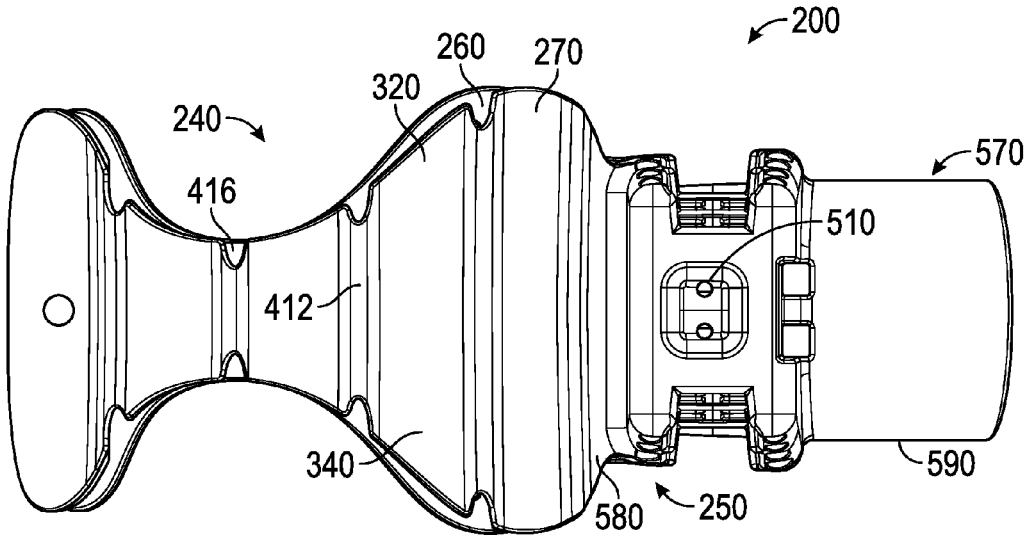
200
260
270
320
240
570
416
510
412
340
590
580
250

FIG. 8

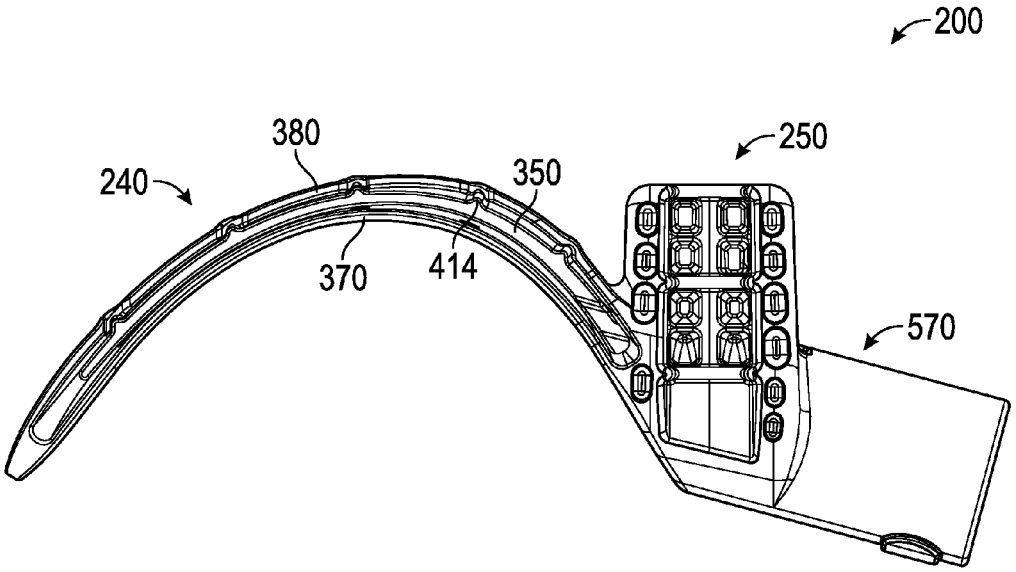
200
380
250
240
350
370
414
570

FIG. 9

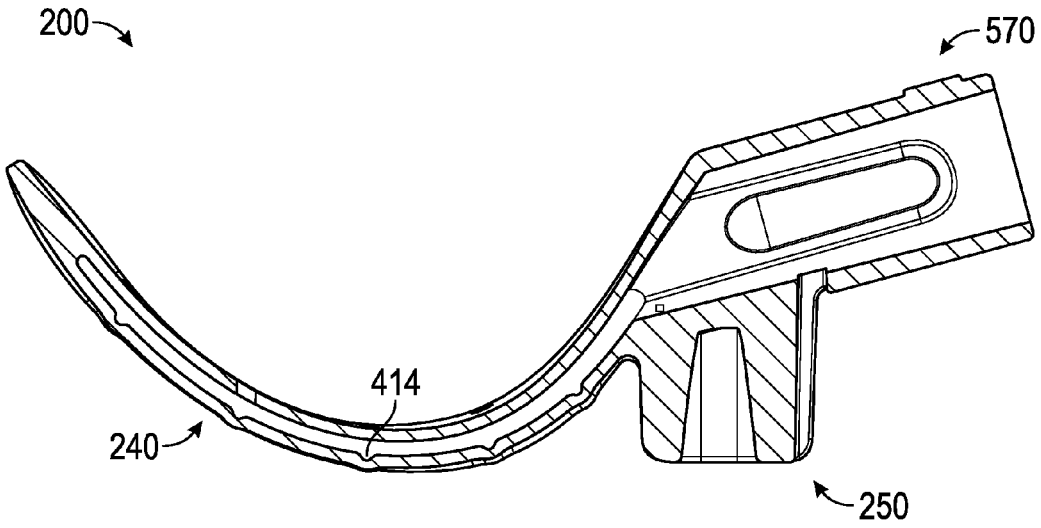

FIG. 10

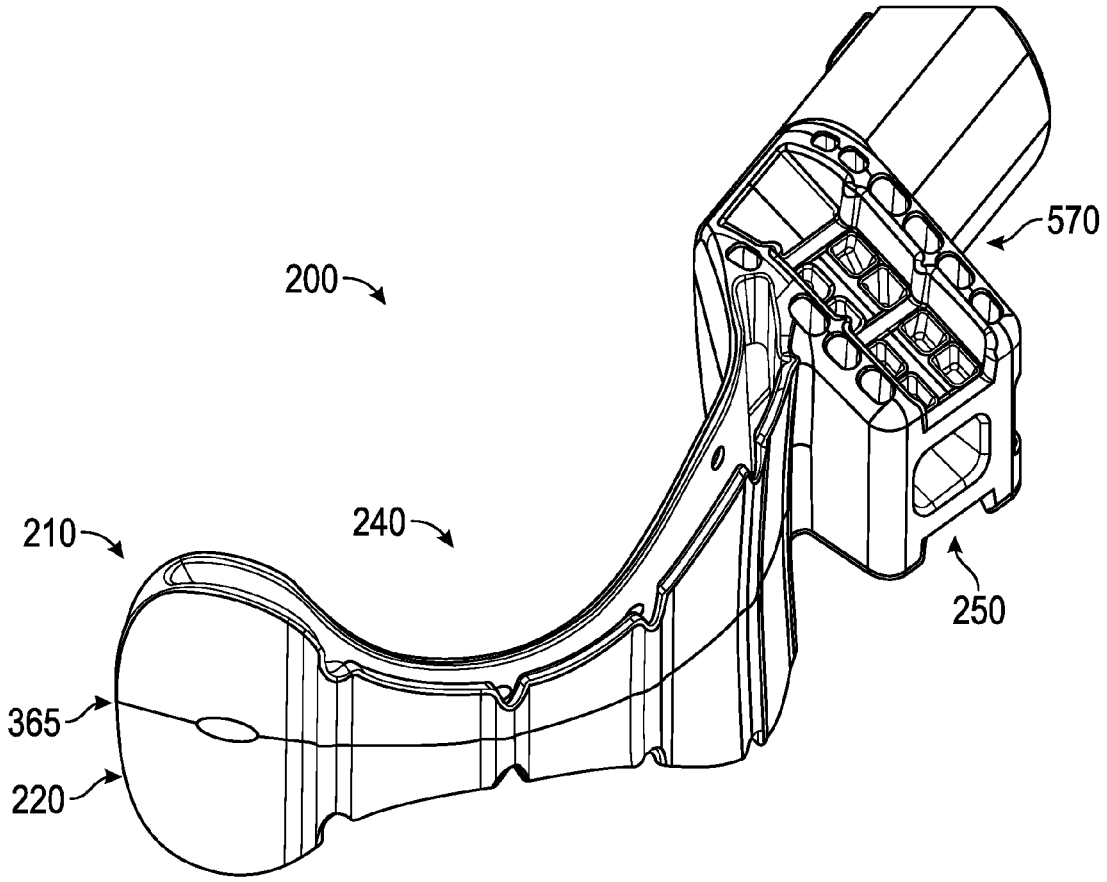

FIG. 11

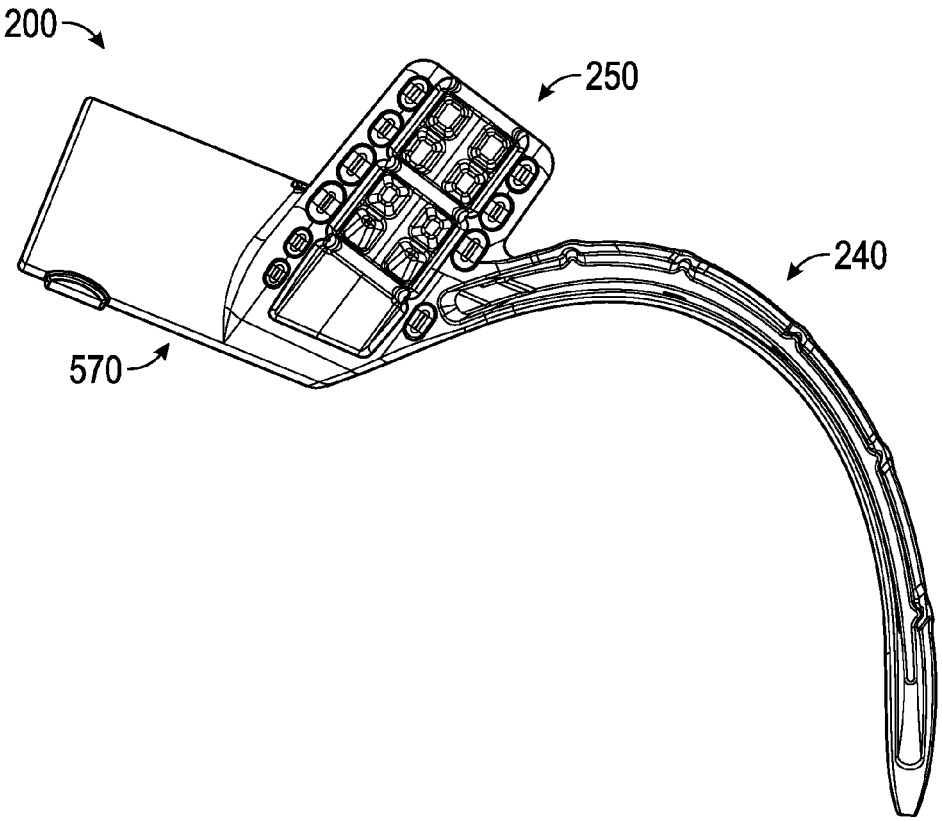

FIG. 12

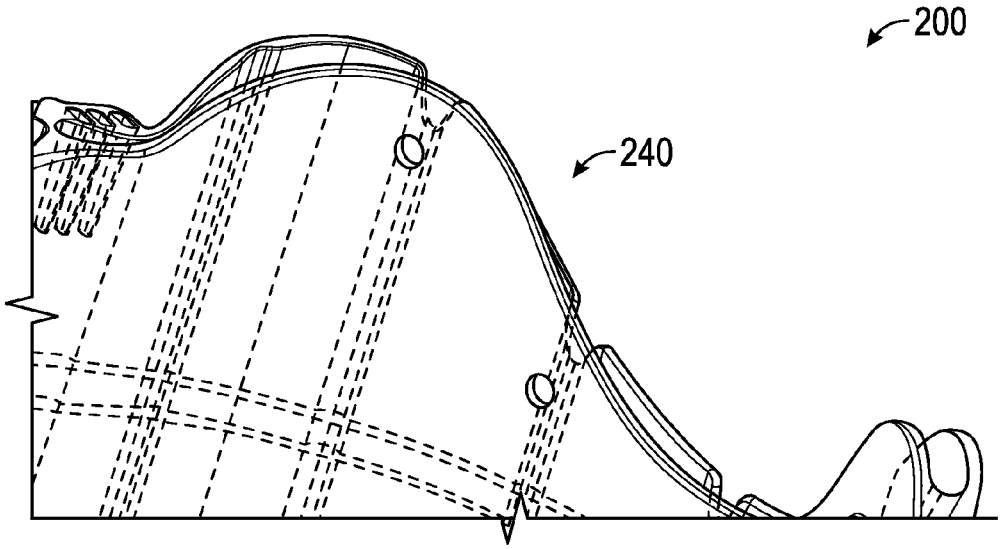

FIG. 13

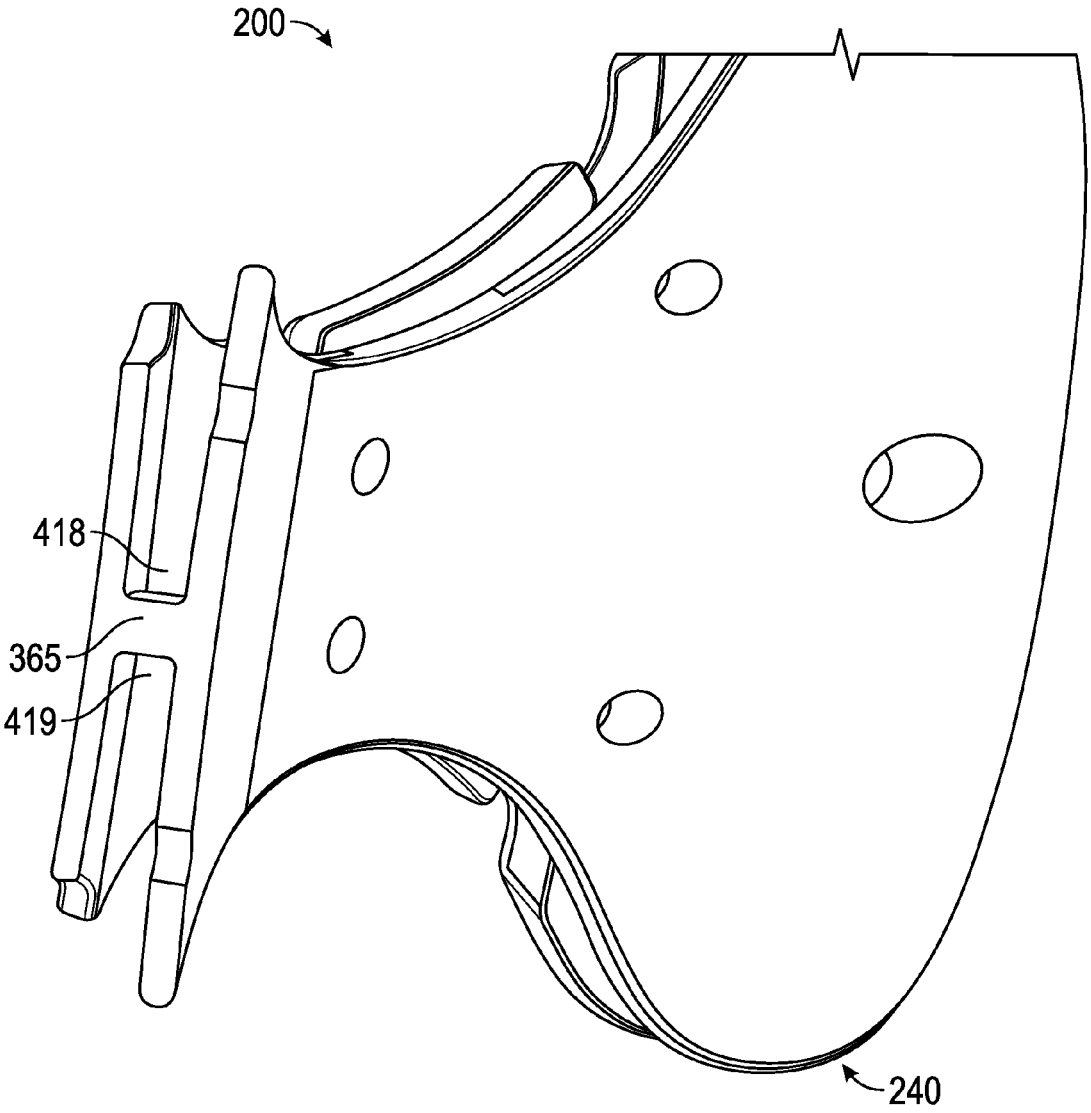

FIG. 14

INTRAORAL DEVICE AND METHOD OF USE

CROSS-REFERENCE TO RELATED APPLICATION

This application is a continuation of pending application Ser. No. 14/285,248 filed May 22, 2014.

FIELD OF THE INVENTION

The invention relates, in general, to dental appliances, and, in particular, to dental appliances for vacuum suction of the mouth of a dental patient for examination and/or operative purposes.

BACKGROUND OF THE INVENTION

During dental examination and/or operation, a number of fluids, e.g., saliva from the parotid gland, blood, water from the dental equipment, are produced in the patient's mouth. It is important to remove these fluids for the comfort of the patient, to prevent fluids and material from being aspirated into the throat or lungs of the patient, and to assist the health care provider in observing and/or operating within the patient's mouth.

SUMMARY OF THE INVENTION

An aspect of the invention involves an intraoral device that removes fluids from all areas of the mouth, e.g., operating side, vestibule area on the operation side, the lingual vestibule (along the side of the tongue), contralateral side vestibule, eliminating the need for constant patient mouth rinsing and the need for a dental assistant to aspirate debris.

Another aspect of the invention involves an intraoral device comprising a flexible body comprising an upper front flap including evacuation holes and a upper edge; an upper rear flap forming an upper pocket with the upper front flap and including internal channels and a upper edge separated from the upper edge of the upper front flap to form an upper pocket opening, the internal channels terminating in grooves along the upper edge; a lower front flap including evacuation holes and a lower edge; a lower rear flap forming a lower pocket with the lower front flap and including internal channels and a lower edge separated from the lower edge of the lower front flap to form an lower pocket opening, the internal channels terminating in grooves along the lower edge, wherein in a non-vacuum state the upper pocket opening and lower pocket opening are open and in a vacuum state the upper pocket opening and lower pocket opening are substantially sealed closed so that aspiration of fluids from the patient's mouth occurs through the evacuation holes in the front flaps and grooves, which become fluid inlets for drawing fluids through the channels, of the rear flaps.

One or more implementations of the above aspect of the invention include one or more of the following: the evacuation holes are in the front flaps and not in the rear flaps; the grooves are in the rear flaps at an intersection of the edges and the internal channels of the rear flaps and not in the front flaps; the internal channels are vertical channels; the internal channels form corresponding external ridges in the rear flaps; the evacuation holes communicate with and are aligned with the internal channels; the intraoral device includes a horizontally and longitudinally extending spine, an upper internal evacuation channel disposed above the spine in the upper pocket, and a lower internal evacuation channel disposed below the spine in the lower pocket; and/or the intraoral device includes an upper portion above the spine and a lower portion below the spine that are vertically symmetrical.

Another aspect of the invention involves a method of using the intraoral device of the aspect of the invention (or one or more implementations) described above. The method comprises inserting the intraoral device into the patient's mouth so that the upper edges of the upper flaps contact an upper part of the patient's mouth and the lower edges of the lower flaps contact a lower part of tongue within the mouth of the patient; applying vacuum state to the intraoral device so that the upper pocket opening and lower pocket opening are substantially sealed closed and the grooves become fluid inlets for drawing fluids through the channels; and aspirating fluids from the patient's mouth through the evacuation holes in the front flaps and into the channels through the grooves.

Other, more particular features and advantages of the inventions are set forth in the following detailed description and drawings.

BRIEF DESCRIPTION OF THE DRAWINGS

The drawings illustrate both the design and utility of preferred embodiments of the present invention, in which similar elements are referred to by common reference numbers, wherein:

FIG. **1** is a front perspective view of an embodiment of the intraoral device shown inside a patient's mouth;

FIG. **2** is a front perspective view of the intraoral device;

FIG. **3** is a rear perspective view of the intraoral device;

FIG. **4** is a front elevational view of the intraoral device;

FIG. **5** is a left side elevational view of the intraoral device;

FIG. **6** is a bottom plan view of the intraoral device;

FIG. **7** is a right side elevational of the intraoral device;

FIG. **8** Is a rear elevational view of the intraoral illumination device;

FIG. **9** is a top plan view of the intraoral device;

FIG. **10** is a cross-sectional view of the intraoral device taken along lines **10-10** of FIG. **4**;

FIG. **11** is another rear perspective view of the intraoral device;

FIG. **12** is another plan view of the intraoral device;

FIG. **13** is a partial perspective view of the intraoral device;

FIG. **14** is another cross-sectional view of the intraoral device.

DETAILED DESCRIPTION OF PREFERRED EMBODIMENTS

With reference to FIGS. **1-14**, an embodiment of an intraoral device **200** that removes fluids from all areas of a patient's mouth **202** will now be described. The intraoral device **200** is preferably a one-piece, flexible, integrated molded body made of a single homogeneous material or combination of materials. The intraoral device **200** is preferably molded out of a translucent (e.g., transparent), flexible, soft, elastic, resilient, biocompatible thermoplastic elastomer. The intraoral device **200** is also vertically symmetrical so that an upper portion **210** is symmetric with respect to a lower portion **220** relative to spine **365**. This allows the same intraoral device **200** to be positioned on either the left side or the right side of the patient's mouth. The intraoral device **200** may also come in different sizes for

different-size mouths. The intraoral device **200** is also disposable after each use. The intraoral device **200** may be used to provide vacuum suction or the intraoral device **200** may be used to provide vacuum suction and illumination.

The single-piece intraoral device **200** generally includes integrated tongue and cheek retractor **240**, bite piece **250**, and connection section **570**, each of which will be described in turn below. In alternative embodiments, one or more of the tongue and cheek retractor **240**, bite piece **250**, and connection section **570** are separate, connectable components.

The tongue and cheek retractor **240** has inner surfaces **260** and outer surfaces **270**. The retractor **240** includes an incurved main body portion **280** and a forwardly angled cheek retractor (or "fish/whale tail") portion **290** joined by isthmus portion **300**.

The retractor **240** includes an upper front flap **310**, an upper rear flap **320**, a lower front flap **330**, and a lower rear flap **340**. The front flaps **310**, **330** and rear flaps **320**, **340** are separated by an upper pocket opening or upper gap **350** and lower pocket opening or lower gap **360**, respectively. The front flaps **310**, **320** and the rear flaps **320**, **340** (minus V-shaped grooves **416**) respectively define envelopes that are the same and aligned with each other. The flaps **310**, **320**, **330**, **340** all extend from and share a common, central spine **365**. The spine **365** extends horizontally and longitudinally a majority of the length of the retractor **240** and divides the upper half **210** from the lower half **220** of the intraoral device **200**. In addition to serving as the intersection location for the flaps **310**, **320**, **330**, **340**, in an embodiment of the intraoral device **200** where the intraoral device **200** is an intraoral illumination and vacuum suction device, the spine **365** may serve as a light pipe and act as a separator for an upper internal evacuation channel **418** above the spine **365** and a lower internal evacuation channel **419** below the spine **365**.

In the embodiment shown, the front flaps **310**, **330** have a flat, outer front surface with evacuation holes **410** therein and the rear flaps **320**, **340** include curved, outwardly extending, vertical ridges **412** with no evacuation holes **410**. On an interior surface of the ridges **412**, respective incurved vertical channels **414** (with no evacuation holes **410**, similar to ridges **412**) are formed. In an alternative embodiment, an interior surface of the rear flaps **320**, **340** include the incurved vertical channels **414** and an exterior surface of the rear flaps **320**, **340** is substantially flat/smooth (i.e., does not include ridges **412**). The evacuation holes **410** of the front flaps **310**, **330** are vertically aligned with the ridges **412**/channels **414**, but the ridges **412**/channels **414** do not include the evacuation holes **410**. The ridges **412**/channels **414** are not in the front flaps **310**, **330**. The channels **414** terminate at one end in spine **365** and at an opposite end terminate in V-shaped grooves or slots **416** in the rear flaps **320**, **340** (at an intersection of the edges **380**, **400** and the internal vertical channels **414** of the rear flaps **320**, **340**). There are no V-shaped grooves **416** in front flaps **310**, **330**. In an alternative embodiment, the grooves or slots **416** are U-shaped grooves. In further embodiments, the grooves **416** are only in front flaps **310**, **330** or are in both the front flaps **310**, **330** and the rear flaps **320**, **340**.

The ridges **412**, which run along outer surface **270** of rear flaps **320**, **340**, terminate at opposite ends in the V-shaped grooves **416**. In an alternative embodiment, there are no ridges **412**, and V-shaped grooves **416** are smaller and simply cut into the flaps. The length of the channels **414** is about ½ the length of the ridges **412**. In a preferred embodiment, the channels **414** and ridges **412** are vertical, not angled, and are perpendicularly disposed relative to spine **365**. In alternative embodiments, the channels **414**/ridges **412** are angled relative to spine **365**.

In use, when vacuum forces imparted to the intraoral device **200** by a vacuum source cause the front flaps **310**, **330** and the rear flaps **320**, **340** to be drawn together, the channels **414** of the rear flaps **320**, **340** remain in communication with the interior of the patient's mouth through the V-shaped grooves **416** and the evacuation holes **410** along the front flaps **310**, **330** remain in communication with both the channels **414** and the interior of the patient's mouth. Thus, the evacuation holes **410** in the front flaps **310**, **330** and rearwardly extending ridges **412**/channels **414**/V-shaped grooves **416** in the rear flaps **320**, **340**, in combination, do not close with oral-tissue blocking areas in the patient's mouth. Not having evacuation holes in the rear flaps **320**, **340**, and especially not having evacuation holes in the rear flaps **320**, **340** aligned with the evacuation holes **410** of the front flaps **320**, **340** prevents spray from a water three-way syringe from passing through the intraoral device **200** and into the patient's throat.

FIG. **14** illustrate upper internal evacuation channel **418** and lower internal evacuation channel **419** adjacent the spine **365** that do not close (due to rigidity of spine **365**) when the vacuum forces imparted to the intraoral device **200** by a vacuum source cause the front flaps **310**, **330** and the rear flaps **320**, **340** to be drawn together. FIG. **14** also illustrates the fluid path through the intraoral device **200** when the front flaps **310**, **330** and the rear flaps **320**, **340** are drawn together by the vacuum forces. The evacuation holes **410** in the front flaps **310**, **330** and rearwardly extending ridges **412**/channels **414**/V-shaped grooves **416** in the rear flaps **320**, **340**, in combination, allow the upper internal evacuation channel **418** and lower internal evacuation channel **419** to be smaller than was possible in the past because of the improved communication between the channels **418**/**419** and interior of the patient's mouth caused by the evacuation holes **410**, ridges **412**/channels **414**, and V-shaped grooves **416**.

Although eight evacuation holes **410**, four ridges **412**, and eight channels **414** are shown, in alternative embodiments, the number and/or location of evacuation holes **410**, ridges **412**, and/or channels **414** may vary.

The upper front flap **310** and the upper rear flap **320** are configured to rest or flex against the paletal area or roof of the patient's mouth **36** during use. The upper roof of the mouth spans the upper gap **350** and pushes or bends the upper front flap **310** and the upper rear flap **320** forward to create a substantial seal along upper edges **370**, **380**, which are aligned with each other (excepted for the V-shaped grooves **416**), creating a substantially sealed upper internal evacuation channel **418** in the upper gap **350**, but yet still in communication with the patient's mouth through the evacuation holes **410** in the front flaps **310**, **330** and the rearwardly extending ridges **412**/channels **414**/V-shaped grooves **416** in the rear flaps **320**, **340**. Similarly, the lower front flap **330** and the lower rear flap **340** are configured to rest or flex against the lingual area of mouth or tongue to keep the tongue protected and retracted during use. The tongue and floor of the patient's mouth span the lower gap **360** and forms a substantially seal along lower edges **390**, **400**, which are aligned with each other (excepted for the V-shaped grooves **416**), creating a substantially sealed lower internal evacuation channel in the lower gap **360**, but yet still in communication with the patient's mouth through the evacuation holes **410** in the front flaps **310**, **330** and the rearwardly extending ridges **412**/channels **414**/V-shaped grooves **416** in the rear flaps **320**, **340**. Thus, in a non-vacuum state, the

upper pocket opening **350** and lower pocket opening **360** are open and in a vacuum state the upper pocket opening **350** and lower pocket opening **360** are substantially sealed closed so that aspiration of fluids from the patient's mouth occurs through the evacuation holes **410** in the front flaps **310**, **330** and the V-shaped grooves **416**, which become fluid inlets for drawing fluids through the vertical channels **414**, of the rear flaps **320**, **340**.

The cheek retractor portion **290** has an angled, curved, generally fish/whale-tail shape. In use, the cheek retractor portion **290** is flexed inward towards the main body portion **280** and rests against the inner cheek tissue between the cheek tissue and the outside of the teeth. With the cheek retractor portion **290** flexed, the upper flaps **310**, **320** and lower flaps **330**, **340** are closed together, forming a substantial seal along the upper edges **370**, **380** and the lower edges **390**, **400** of the retractor **240** adjacent where the isthmus portion **300** and cheek retractor portion **290** join, but yet still in communication with the patient's mouth through the evacuation holes **410** in the front flaps **310**, **330** and the rearwardly extending ridges **412**/channels **414**/V-shaped grooves **416** in the rear flaps **320**, **340**.

When the tongue and cheek retractor **240** is positioned within the patient's mouth (similar to that shown in FIG. **1**), the flexed upper flaps **310**, **320**, the flexed lower flaps **330**, **340**, and the flexed cheek retractor portion **290** form an envelope for isolating an area of interest in the patient's mouth and protect the upper roof, tongue and cheek of the patient's mouth from instruments such as dental drills during the dental procedure and prevent aspiration of debris or dropped items into the patient's throat.

The bite piece **250** includes symmetric, opposite tooth-engaging portions joined by an intermediate connection portion and allows for flexible, resilient, elastic movement of the tooth engaging portions in vertical, longitudinal, and lateral directions with respect to each other to allow vertical, longitudinal, and lateral biting movement by the patient for maximum biting comfort. The bite piece **250** includes a suction cavity **500** and a pair of vacuum holes **510** to allow a vacuum force to be provided in the cavity **500** for suctioning fluids in the area of the retro molar pad and the maxillary tuberosity of the patient's mouth.

The connection section **570** extends from the bite piece **250** and a proximal portion **580** of the retractor **240**. The connection section **570** is configured to extend outside of a patient's mouth and attach to a multi-lumen vacuum connector/device for delivering vacuum suction (or vacuum suction and illumination) to the intraoral device **200**.

The connection section **570** includes an open-ended tube **590** having a generally elliptical cross-section that tapers slightly in height as the tube **590** intersects the bite piece **250** and the proximal portion **580** of the retractor **240**. An interior of the open-ended tube **590** defines a main vacuum channel **595**. Adjacent the bite piece **250** and the proximal portion **580** of the retractor **240**, the connection section **570** includes a cylindrical tube-shaped illumination connector **600** for transmitting light to the spine **365** and for supporting a plug portion of a vacuum connector. On opposite vertical sides of the illumination connector **600**, where the illumination connector **600** joins the proximal portion **580** of the retractor **240**, upper and lower vacuum ports **610**, **620** communicate the main vacuum channel **595** with the upper and lower internal evacuation channels **418**, **419** of the retractor **240**. The main vacuum channel **595** communicates with the suction cavity **500** through the vacuum holes **510**.

In use, the intraoral device **200** is inserted into the patient's mouth **202** so that the upper edges **370**, **380** of the upper flaps **310**, **320** contact an upper part of the patient's mouth **202** and the lower edges **390**, **400** of the lower flaps **330**, **340** contact a lower part of tongue within the mouth **202** of the patient; a vacuum state is applied to the intraoral device **200** so that the upper pocket opening **350** and lower pocket opening **360** are substantially sealed closed and the V-shaped grooves **416** become fluid inlets for drawing fluids through the vertical channels **414**; and fluids from the patient's mouth are aspirated through the evacuation holes **410** in the front flaps **310**, **330** and into the vertical channels **414** through the V-shaped grooves **416**.

Although this invention has been described in terms of certain preferred embodiments, other embodiments apparent to those of ordinary skill in the art are also within the scope of this invention. Accordingly, the scope of the invention is intended to be defined only by the claims that follow.

What is claimed is:

1. An intraoral device, comprising:

a flexible body, comprising:

an upper front flap including an upper edge;

an upper rear flap forming an upper pocket with the upper front flap, the upper rear flap including an upper edge separated from the upper edge of the upper front flap to form an upper pocket opening;

at least one of the upper front flap and the upper rear flap including internal channels;

a lower front flap including a lower edge;

a lower rear flap forming a lower pocket with the lower front flap, the lower rear flap including a lower edge separated from the lower edge of the lower front flap to form an lower pocket opening;

at least one of the lower front flap and the lower rear flap including internal channels;

wherein the internal channels of at least one of the upper front and rear flaps and the lower front and rear flaps terminating in grooves along at least one of the upper edges and the lower edges, in a non-vacuum state the upper pocket opening and lower pocket opening are open, and in a vacuum state the upper pocket opening and lower pocket opening are substantially sealed closed so that aspiration of fluids from a patient's mouth occurs through the grooves, which become fluid inlets for drawing fluids through the internal channels.

2. The intraoral device of claim **1**, further including evacuation holes in at least one of the front flaps and the rear flaps.

3. The intraoral device of claim **2**, wherein the evacuation holes are in the front flaps and not in the rear flaps.

4. The intraoral device of claim **2**, wherein the evacuation holes communicate with and are aligned with the internal channels.

5. The intraoral device of claim **1**, wherein the grooves are in the rear flaps at an intersection of the edges and the internal channels of the rear flaps and not in the front flaps.

6. The intraoral device of claim **1**, wherein the internal channels are vertical channels.

7. The intraoral device of claim **1**, wherein the internal channels form corresponding external ridges in the rear flaps.

8. The intraoral device of claim **1**, wherein the intraoral device includes a horizontally and longitudinally extending spine, an upper internal evacuation channel disposed above the spine in the upper pocket, and a lower internal evacuation channel disposed below the spine in the lower pocket.

9. The intraoral device of claim **8**, wherein the intraoral device includes an upper portion above the spine and a lower portion below the spine that are vertically symmetrical.

10. The intraoral device of claim **1**, wherein the lower rear flap and the upper rear flap define a profile, the lower front flap and the upper front flap define a profile, and the profile of the lower rear flap and the upper rear flap is the same as the profile of the lower front flap and the upper front flap except for the grooves.

11. A method of using the intraoral device of claim **1**, comprising: inserting the intraoral device into a patient's mouth so that a upper edges of a upper flaps contact an upper part of the patient's mouth and the lower edges of the lower flaps contact a lower part of a tongue within the mouth of the patient; applying vacuum state to the intraoral device so that the upper pocket opening and lower pocket opening are substantially sealed closed and the grooves become fluid inlets for drawing fluids through the channels; aspirating fluids from the patient's mouth through the grooves in the intraoral device.

* * * * *