Electronic Acknowledgement Receipt

EFS ID:	44358149
Application Number:	14228057
International Application Number:	
Confirmation Number:	1983
Title of Invention:	INTRAORAL DEVICE WITH SLIT
First Named Inventor/Applicant Name:	Thien Nguyen
Customer Number:	138718
Filer:	Ruby Lim Chung/Lea Fong
Filer Authorized By:	Ruby Lim Chung
Attorney Docket Number:	INCEP-001COD
Receipt Date:	24-NOV-2021
Filing Date:	27-MAR-2014
Time Stamp:	12:41:01
Application Type:	Utility under 35 USC 111(a)

Payment information:

Submitted with Payment	no

File Listing:

Document Number	Document Description	File Name	File Size(Bytes)/ Message Digest	Multi Part /.zip	Pages (if appl.)
1	Information Disclosure Statement (IDS) Form (SB08)	084892-514250_0_IDS_20211123174149.pdf	42069 7ffdd093400b3c7ef4e6e89c57f2eb5f3da2f442	no	5

Warnings:

EX1021
Petitioner Ascentcare ('686 Patent)

Information:					
This is not an USPTO supplied IDS fillable form					
2	Non Patent Literature	DryShield_Brochure.pdf	1012487 10d0745aa6fcea2f2012e7e1c440ed8e334f5848	no	4
Warnings:					
Information:					
3	Non Patent Literature	DryShield_single-use_vs_Zyris_Isolite_single-use.pdf	208677 9ec92d29ed9292b9e89915b3b9e98d26ffe11e04	no	1
Warnings:					
Information:					
4	Non Patent Literature	Dryshield_Presentation_Learn_all_about_Dryshield.pdf	189543 0c9bdae9f17fc5017d7b7fed93c89b5659d0ff59	no	1
Warnings:					
Information:					
5	Non Patent Literature	DryShield_Tutorial_Maximize_Your_Dryshields_Experience.pdf	209897 4f765735d56cd2ebf102f2a4302dbef76b4548af	no	1
Warnings:					
Information:					
6	Non Patent Literature	INCEP-001COA_Non-Final_OA_10-6-21.pdf	526170 c2406b4263281a5ff8f7cd864ed793541231a2f9	no	15
Warnings:					
Information:					
7	Non Patent Literature	INCEP-006D_Non-Final_OA_10-4-21.pdf	322509 b8e34497b38b6ff0e5c500a95f1b1ae493c1f6f6	no	8
Warnings:					
Information:					
8	Non Patent Literature	INCEP-008D_Non-Final_OA_10-4-21.pdf	345010 a2253192a0b2fc8d5d0ddd2d8c811acabb46edcb	no	8
Warnings:					
Information:					

9	Non Patent Literature	INCEP-009D_Non-Final_OA_10-4-21.pdf	560115 85a10db6f46ac9cdf5c02cb98ee26951cc94362c	no	9
Warnings:					
Information:					
10	Non Patent Literature	INCEP-010_Non-Final_OA_10-4-21.pdf	520616 fd068d9e31c18699763c4c19f4c5558b6e90298a	no	8
Warnings:					
Information:					
11	Transmittal Letter	INCEP-001COD_IDS_Statement_11-24-21.pdf	97276 c44858415c218743b4b724c2a4bd226f1ab6bbe5	no	2
Warnings:					
Information:					
			Total Files Size (in bytes):	4034369	

This Acknowledgement Receipt evidences receipt on the noted date by the USPTO of the indicated documents, characterized by the applicant, and including page counts, where applicable. It serves as evidence of receipt similar to a Post Card, as described in MPEP 503.

New Applications Under 35 U.S.C. 111

If a new application is being filed and the application includes the necessary components for a filing date (see 37 CFR 1.53(b)-(d) and MPEP 506), a Filing Receipt (37 CFR 1.54) will be issued in due course and the date shown on this Acknowledgement Receipt will establish the filing date of the application.

National Stage of an International Application under 35 U.S.C. 371

If a timely submission to enter the national stage of an international application is compliant with the conditions of 35 U.S.C. 371 and other applicable requirements a Form PCT/DO/EO/903 indicating acceptance of the application as a national stage submission under 35 U.S.C. 371 will be issued in addition to the Filing Receipt, in due course.

New International Application Filed with the USPTO as a Receiving Office

If a new international application is being filed and the international application includes the necessary components for an international filing date (see PCT Article 11 and MPEP 1810), a Notification of the International Application Number and of the International Filing Date (Form PCT/RO/105) will be issued in due course, subject to prescriptions concerning national security, and the date shown on this Acknowledgement Receipt will establish the international filing date of the application.

PTO/SB/08a (02-18)
Approved for use through 11/30/2020. OMB 0651-0031
U.S. Patent and Trademark Office; U.S. DEPARTMENT OF COMMERCE
Under the Paperwork Reduction Act of 1995, no persons are required to respond to a collection of information unless it contains a valid OMB control number.

INFORMATION DISCLOSURE STATEMENT BY APPLICANT

(**Not for submission under 37 CFR 1.99)**

Application Number	14228057
Filing Date	2014-03-27
First Named Inventor	NGUYEN; Thien
Art Unit	3772
Examiner Name	MAI, HAO D
Attorney Docket Number	084892-514250

U.S.PATENTS

Examiner Initial*	Cite No	Patent Number	Kind Code[1]	Issue Date	Name of Patentee or Applicant of cited Document	Pages,Columns,Lines where Relevant Passages or Relevant Figures Appear
	1	None				

If you wish to add additional U.S. Patent citation information please click the Add button.

U.S.PATENT APPLICATION PUBLICATIONS

Examiner Initial*	Cite No	Publication Number	Kind Code[1]	Publication Date	Name of Patentee or Applicant of cited Document	Pages,Columns,Lines where Relevant Passages or Relevant Figures Appear
	1	None				

If you wish to add additional U.S. Published Application citation information please click the Add button.

FOREIGN PATENT DOCUMENTS

Examiner Initial*	Cite No	Foreign Document Nu	Country Code[2] i	Kind Code[4]	Publication Date	Name of Patentee or Applicant of cited Document	Pages,Columns,Lines where Relevant Passages or Relevant Figures Appear	T[5]
	1	None						☐

If you wish to add additional Foreign Patent Document citation information please click the Add button

NON-PATENT LITERATURE DOCUMENTS

Examiner Initials*	Cite No	Include name of the author (in CAPITAL LETTERS), title of the article (when appropriate), title of the item (book, magazine, journal, serial, symposium, catalog, etc), date, pages(s), volume-issue number(s), publisher, city and/or country where published.	T[5]

INFORMATION DISCLOSURE STATEMENT BY APPLICANT (**Not for submission under 37 CFR 1.99)**		
	Application Number	14228057
	Filing Date	2014-03-27
	First Named Inventor	NGUYEN; Thien
	Art Unit	3772
	Examiner Name	MAI, HAO D
	Attorney Docket Number	084892-514250

	1	Docket No. INCEP-001COC U.S. Patent Application 14/228,054; Office Action mailed 6/25/21.	☐

If you wish to add additional non-patent literature document citation information please click the Add button

EXAMINER SIGNATURE

Examiner Signature		Date Considered	

*EXAMINER: Initial if reference considered, whether or not citation is in conformance with MPEP 609. Draw line through a citation if not in conformance and not considered. Include copy of this form with next communication to applicant.

[1] See Kind Codes of USPTO Patent Documents at www.USPTO.GOV or MPEP 901.04. [2] Enter office that issued the document, by the two-letter code (WIPO Standard ST.3). [3] For Japanese patent documents, the indication of the year of the reign of the Emperor must precede the serial number of the patent document. [4] Kind of document by the appropriate symbols as indicated on the document under WIPO Standard ST.16 if possible. [5] Applicant is to place a check mark here if English language translation is attached.

INFORMATION DISCLOSURE STATEMENT BY APPLICANT (**Not for submission under 37 CFR 1.99)**		
	Application Number	14228057
	Filing Date	2014-03-27
	First Named Inventor	NGUYEN; Thien
	Art Unit	3772
	Examiner Name	MAI, HAO D
	Attorney Docket Number	084892-514250

CERTIFICATION STATEMENT

Please see 37 CFR 1.97 and 1.98 to make the appropriate selection(s):

☐ That each item of information contained in the information disclosure statement was first cited in any communication from a foreign patent office in a counterpart foreign application not more than three months prior to the filing of the information disclosure statement. See 37 CFR 1.97(e)(1).

OR

☐ That no item of information contained in the information disclosure statement was cited in a communication from a foreign patent office in a counterpart foreign application, and, to the knowledge of the person signing the certification after making reasonable inquiry, no item of information contained in the information disclosure statement was known to any individual designated in 37 CFR 1.56(c) more than three months prior to the filing of the information disclosure statement. See 37 CFR 1.97(e)(2).

☐ See attached certification statement.

☐ The fee set forth in 37 CFR 1.17 (p) has been submitted herewith.

☐ A certification statement is not submitted herewith.

SIGNATURE

A signature of the applicant or representative is required in accordance with CFR 1.33, 10.18. Please see CFR 1.4(d) for the form of the signature.

Signature	/Ruby L. Chung/	Date (YYYY-MM-DD)	2021-11-24
Name/Print	Ruby L. Chung	Registration Number	76809

This collection of information is required by 37 CFR 1.97 and 1.98. The information is required to obtain or retain a benefit by the public which is to file (and by the USPTO to process) an application. Confidentiality is governed by 35 U.S.C. 122 and 37 CFR 1.14. This collection is estimated to take 1 hour to complete, including gathering, preparing and submitting the completed application form to the USPTO. Time will vary depending upon the individual case. Any comments on the amount of time you require to complete this form and/or suggestions for reducing this burden, should be sent to the Chief Information Officer, U.S. Patent and Trademark Office, U.S. Department of Commerce, P.O. Box 1450, Alexandria, VA 22313-1450. DO NOT SEND FEES OR COMPLETED FORMS TO THIS ADDRESS. **SEND TO: Commissioner for Patents, P.O. Box 1450, Alexandria, VA 22313-1450.**

Privacy Act Statement

The Privacy Act of 1974 (P.L. 93-579) requires that you be given certain information in connection with your submission of the attached form related to a patent application or patent. Accordingly, pursuant to the requirements of the Act, please be advised that: (1) the general authority for the collection of this information is 35 U.S.C. 2(b)(2); (2) furnishing of the information solicited is voluntary; and (3) the principal purpose for which the information is used by the U.S. Patent and Trademark Office is to process and/or examine your submission related to a patent application or patent. If you do not furnish the requested information, the U.S. Patent and Trademark Office may not be able to process and/or examine your submission, which may result in termination of proceedings or abandonment of the application or expiration of the patent.

The information provided by you in this form will be subject to the following routine uses:

1. The information on this form will be treated confidentially to the extent allowed under the Freedom of Information Act (5 U.S.C. 552) and the Privacy Act (5 U.S.C. 552a). Records from this system of records may be disclosed to the Department of Justice to determine whether the Freedom of Information Act requires disclosure of these record s.

2. A record from this system of records may be disclosed, as a routine use, in the course of presenting evidence to a court, magistrate, or administrative tribunal, including disclosures to opposing counsel in the course of settlement negotiations.

3. A record in this system of records may be disclosed, as a routine use, to a Member of Congress submitting a request involving an individual, to whom the record pertains, when the individual has requested assistance from the Member with respect to the subject matter of the record.

4. A record in this system of records may be disclosed, as a routine use, to a contractor of the Agency having need for the information in order to perform a contract. Recipients of information shall be required to comply with the requirements of the Privacy Act of 1974, as amended, pursuant to 5 U.S.C. 552a(m).

5. A record related to an International Application filed under the Patent Cooperation Treaty in this system of records may be disclosed, as a routine use, to the International Bureau of the World Intellectual Property Organization, pursuant to the Patent Cooperation Treaty.

6. A record in this system of records may be disclosed, as a routine use, to another federal agency for purposes of National Security review (35 U.S.C. 181) and for review pursuant to the Atomic Energy Act (42 U.S.C. 218(c)).

7. A record from this system of records may be disclosed, as a routine use, to the Administrator, General Services, or his/her designee, during an inspection of records conducted by GSA as part of that agency's responsibility to recommend improvements in records management practices and programs, under authority of 44 U.S.C. 2904 and 2906. Such disclosure shall be made in accordance with the GSA regulations governing inspection of records for this purpose, and any other relevant (i.e., GSA or Commerce) directive. Such disclosure shall not be used to make determinations about individuals.

8. A record from this system of records may be disclosed, as a routine use, to the public after either publication of the application pursuant to 35 U.S.C. 122(b) or issuance of a patent pursuant to 35 U.S.C. 151. Further, a record may be disclosed, subject to the limitations of 37 CFR 1.14, as a routine use, to the public if the record was filed in an application which became abandoned or in which the proceedings were terminated and which application is referenced by either a published application, an application open to public inspections or an issued patent.

9. A record from this system of records may be disclosed, as a routine use, to a Federal, State, or local law enforcement agency, if the USPTO becomes aware of a violation or potential violation of law or regulation.

Electronic Acknowledgement Receipt

EFS ID:	44358254
Application Number:	14228057
International Application Number:	
Confirmation Number:	1983
Title of Invention:	INTRAORAL DEVICE WITH SLIT
First Named Inventor/Applicant Name:	Thien Nguyen
Customer Number:	138718
Filer:	Ruby Lim Chung/Lea Fong
Filer Authorized By:	Ruby Lim Chung
Attorney Docket Number:	INCEP-001COD
Receipt Date:	24-NOV-2021
Filing Date:	27-MAR-2014
Time Stamp:	12:42:35
Application Type:	Utility under 35 USC 111(a)

Payment information:

Submitted with Payment	no

File Listing:

Document Number	Document Description	File Name	File Size(Bytes)/ Message Digest	Multi Part /.zip	Pages (if appl.)
1	Transmittal Letter	INCEP-001COD_IDS_Statement-2_11-24-21.pdf	96875 90b87cb19e7e552d0899cb9cdc3a37d9969371f7	no	2

Warnings:

Information:					
2	Information Disclosure Statement (IDS) Form (SB08)	084892-514250_0_IDS_20211123175505.pdf	35542 90e708bba5a444564f5a99cc864f96da0612950b	no	4
Warnings:					
Information:					
This is not an USPTO supplied IDS fillable form					
3	Non Patent Literature	OA_US14228054_25Jun2021_11pgs_EFS.pdf	1795566 9e18a0d7729d4db5c2cd7cdd85df76d4b23aa597	no	11
Warnings:					
Information:					
		Total Files Size (in bytes):	1927983		

This Acknowledgement Receipt evidences receipt on the noted date by the USPTO of the indicated documents, characterized by the applicant, and including page counts, where applicable. It serves as evidence of receipt similar to a Post Card, as described in MPEP 503.

New Applications Under 35 U.S.C. 111

If a new application is being filed and the application includes the necessary components for a filing date (see 37 CFR 1.53(b)-(d) and MPEP 506), a Filing Receipt (37 CFR 1.54) will be issued in due course and the date shown on this Acknowledgement Receipt will establish the filing date of the application.

National Stage of an International Application under 35 U.S.C. 371

If a timely submission to enter the national stage of an international application is compliant with the conditions of 35 U.S.C. 371 and other applicable requirements a Form PCT/DO/EO/903 indicating acceptance of the application as a national stage submission under 35 U.S.C. 371 will be issued in addition to the Filing Receipt, in due course.

New International Application Filed with the USPTO as a Receiving Office

If a new international application is being filed and the international application includes the necessary components for an international filing date (see PCT Article 11 and MPEP 1810), a Notification of the International Application Number and of the International Filing Date (Form PCT/RO/105) will be issued in due course, subject to prescriptions concerning national security, and the date shown on this Acknowledgement Receipt will establish the international filing date of the application.

IN THE UNITED STATES PATENT AND TRADEMARK OFFICE

Group Art Unit: 3772 | Examiner: Hao D. Mai

Serial No.: 14/228, 057 | Filed: March 27, 2014

In re Application of: Thien Nguyen

Confirmation No.: 1983 | Customer No.: 138718

Title: INTRAORAL DEVICE WITH SLIT

SUPPLEMENTAL INFORMATION DISCLOSURE STATEMENT
Under 37 C.F.R. § 1.56 and 1.97-1.98

Examiner:

Pursuant to the provisions of 37 C.F.R. §§ 1.56 and 1.97-98 of the Rules of Practice in Patent Cases, enclosed herewith is form PTO-SB-08, listing several references. The Examiner is requested to make these references of official record in the application.

The references cited may be material to examination of the application and are submitted in compliance with the Applicant's duty of disclosure as defined by 37 C.F.R. § 1.56.

No representation is made or intended as to the completeness of this list, nor is the inclusion of any reference an admission that it is prior art or pertinent to this application.

Respectfully submitted,
POLSINELLI LLP

Dated: November 24, 2021

By: _____/Ruby L. Chung/_____
Ruby L. Chung (Reg. No. 76,809)
Polsinelli LLP
Three Embarcadero Center, Suite 2400
San Francisco, CA 94111
415-248-2100 (Main)
patentdocketing@polsinelli.com

PTO/SB/08a (02-18)
Approved for use through 11/30/2020. OMB 0651-0031
U.S. Patent and Trademark Office; U.S. DEPARTMENT OF COMMERCE
Under the Paperwork Reduction Act of 1995, no persons are required to respond to a collection of information unless it contains a valid OMB control number.

INFORMATION DISCLOSURE STATEMENT BY APPLICANT

(Not for submission under 37 CFR 1.99)

Application Number	14228057
Filing Date	2014-03-27
First Named Inventor	NGUYEN; Thien
Art Unit	3772
Examiner Name	MAI, HAO D
Attorney Docket Number	084892-514250

U.S.PATENTS Remove

Examiner Initial*	Cite No	Patent Number	Kind Code[1]	Issue Date	Name of Patentee or Applicant of cited Document	Pages,Columns,Lines where Relevant Passages or Relevant Figures Appear
	1	5720275		1998-02-24	PATIL et al.	
	2	6672305		2004-01-06	PARKER; Jeffrey D.	
	3	10390734		2019-08-27	JOHNSON et al.	
	4	10390916		2019-08-27	RASSIBI; Edmond	

If you wish to add additional U.S. Patent citation information please click the Add button. Add

U.S.PATENT APPLICATION PUBLICATIONS Remove

Examiner Initial*	Cite No	Publication Number	Kind Code[1]	Publication Date	Name of Patentee or Applicant of cited Document	Pages,Columns,Lines where Relevant Passages or Relevant Figures Appear
	1	20120015317		2012-01-19	MILO; Anton G. C.	
	2	20170156831		2017-06-08	REYES; Hari Mark	

INFORMATION DISCLOSURE STATEMENT BY APPLICANT (Not for submission under 37 CFR 1.99)		
	Application Number	14228057
	Filing Date	2014-03-27
	First Named Inventor	NGUYEN; Thien
	Art Unit	3772
	Examiner Name	MAI, HAO D
	Attorney Docket Number	084892-514250

	3	20170156833		2017-06-08	REYES; Hari Mark			
	4	20200155284		2020-05-21	BAKER; Gary			

If you wish to add additional U.S. Published Application citation information please click the Add button. Add

FOREIGN PATENT DOCUMENTS Remove

Examiner Initial*	Cite No	Foreign Document Number[3]	Country Code[2] i	Kind Code[4]	Publication Date	Name of Patentee or Applicant of cited Document	Pages,Columns,Lines where Relevant Passages or Relevant Figures Appear	T[5]
	1	2992161	FR	A1	2013-12-27	BRAUD VINCENT [FR]		
	2	100654392	KR	B1	2006-12-06	KIM JAE SOO [KR]		X
	3	0042939	WO	A1	2000-07-27	ENGERON MICHAEL G [US]		☐
	4	0061031	WO	A1	2000-10-19	COSTELLO WILLIAM J [US]		☐
	5	2018126150	WO	A1	2018-07-05	NOVO DENT LLC [US]		☐

If you wish to add additional Foreign Patent Document citation information please click the Add button Add

NON-PATENT LITERATURE DOCUMENTS Remove

Examiner Initials*	Cite No	Include name of the author (in CAPITAL LETTERS), title of the article (when appropriate), title of the item (book, magazine, journal, serial, symposium, catalog, etc), date, pages(s), volume-issue number(s), publisher, city and/or country where published.	T[5]

INFORMATION DISCLOSURE STATEMENT BY APPLICANT (Not for submission under 37 CFR 1.99)		
	Application Number	14228057
	Filing Date	2014-03-27
	First Named Inventor	NGUYEN; Thien
	Art Unit	3772
	Examiner Name	MAI, HAO D
	Attorney Docket Number	084892-514250

	1	Docket No. INCEP-001COC U.S. Patent Application 14/228,054; Final Office Action mailed 1-3-22.
	2	Docket No. INCEP-001COE U.S. Patent Application 14/228,061; Non-Final Office Action mailed 12-8-21.
	3	Docket No. INCEP-005 U.S. Patent Application 16/870,745 Non-Final Office Action mailed 12-3-21.

If you wish to add additional non-patent literature document citation information please click the Add button Add

EXAMINER SIGNATURE

Examiner Signature		Date Considered	

*EXAMINER: Initial if reference considered, whether or not citation is in conformance with MPEP 609. Draw line through a citation if not in conformance and not considered. Include copy of this form with next communication to applicant.

[1] See Kind Codes of USPTO Patent Documents at www.USPTO.GOV or MPEP 901.04. [2] Enter office that issued the document, by the two-letter code (WIPO Standard ST.3). [3] For Japanese patent documents, the indication of the year of the reign of the Emperor must precede the serial number of the patent document. [4] Kind of document by the appropriate symbols as indicated on the document under WIPO Standard ST.16 if possible. [5] Applicant is to place a check mark here if English language translation is attached.

INFORMATION DISCLOSURE STATEMENT BY APPLICANT (Not for submission under 37 CFR 1.99)		
	Application Number	14228057
	Filing Date	2014-03-27
	First Named Inventor	NGUYEN; Thien
	Art Unit	3772
	Examiner Name	MAI, HAO D
	Attorney Docket Number	084892-514250

CERTIFICATION STATEMENT

Please see 37 CFR 1.97 and 1.98 to make the appropriate selection(s):

That each item of information contained in the information disclosure statement was first cited in any communication from a foreign patent office in a counterpart foreign application not more than three months prior to the filing of the information disclosure statement. See 37 CFR 1.97(e)(1).

OR

☒ That no item of information contained in the information disclosure statement was cited in a communication from a foreign patent office in a counterpart foreign application, and, to the knowledge of the person signing the certification after making reasonable inquiry, no item of information contained in the information disclosure statement was known to any individual designated in 37 CFR 1.56(c) more than three months prior to the filing of the information disclosure statement. See 37 CFR 1.97(e)(2).

See attached certification statement.

The fee set forth in 37 CFR 1.17 (p) has been submitted herewith.

A certification statement is not submitted herewith.

SIGNATURE

A signature of the applicant or representative is required in accordance with CFR 1.33, 10.18. Please see CFR 1.4(d) for the form of the signature.

Signature	/Tam Thanh Pham/	Date (YYYY-MM-DD)	2022-03-02
Name/Print	Tam Thanh Pham	Registration Number	50565

This collection of information is required by 37 CFR 1.97 and 1.98. The information is required to obtain or retain a benefit by the public which is to file (and by the USPTO to process) an application. Confidentiality is governed by 35 U.S.C. 122 and 37 CFR 1.14. This collection is estimated to take 1 hour to complete, including gathering, preparing and submitting the completed application form to the USPTO. Time will vary depending upon the individual case. Any comments on the amount of time you require to complete this form and/or suggestions for reducing this burden, should be sent to the Chief Information Officer, U.S. Patent and Trademark Office, U.S. Department of Commerce, P.O. Box 1450, Alexandria, VA 22313-1450. DO NOT SEND FEES OR COMPLETED FORMS TO THIS ADDRESS. **SEND TO: Commissioner for Patents, P.O. Box 1450, Alexandria, VA 22313-1450.**

Privacy Act Statement

The Privacy Act of 1974 (P.L. 93-579) requires that you be given certain information in connection with your submission of the attached form related to a patent application or patent. Accordingly, pursuant to the requirements of the Act, please be advised that: (1) the general authority for the collection of this information is 35 U.S.C. 2(b)(2); (2) furnishing of the information solicited is voluntary; and (3) the principal purpose for which the information is used by the U.S. Patent and Trademark Office is to process and/or examine your submission related to a patent application or patent. If you do not furnish the requested information, the U.S. Patent and Trademark Office may not be able to process and/or examine your submission, which may result in termination of proceedings or abandonment of the application or expiration of the patent.

The information provided by you in this form will be subject to the following routine uses:

1. The information on this form will be treated confidentially to the extent allowed under the Freedom of Information Act (5 U.S.C. 552) and the Privacy Act (5 U.S.C. 552a). Records from this system of records may be disclosed to the Department of Justice to determine whether the Freedom of Information Act requires disclosure of these record s.

2. A record from this system of records may be disclosed, as a routine use, in the course of presenting evidence to a court, magistrate, or administrative tribunal, including disclosures to opposing counsel in the course of settlement negotiations.

3. A record in this system of records may be disclosed, as a routine use, to a Member of Congress submitting a request involving an individual, to whom the record pertains, when the individual has requested assistance from the Member with respect to the subject matter of the record.

4. A record in this system of records may be disclosed, as a routine use, to a contractor of the Agency having need for the information in order to perform a contract. Recipients of information shall be required to comply with the requirements of the Privacy Act of 1974, as amended, pursuant to 5 U.S.C. 552a(m).

5. A record related to an International Application filed under the Patent Cooperation Treaty in this system of records may be disclosed, as a routine use, to the International Bureau of the World Intellectual Property Organization, pursuant to the Patent Cooperation Treaty.

6. A record in this system of records may be disclosed, as a routine use, to another federal agency for purposes of National Security review (35 U.S.C. 181) and for review pursuant to the Atomic Energy Act (42 U.S.C. 218(c)).

7. A record from this system of records may be disclosed, as a routine use, to the Administrator, General Services, or his/her designee, during an inspection of records conducted by GSA as part of that agency's responsibility to recommend improvements in records management practices and programs, under authority of 44 U.S.C. 2904 and 2906. Such disclosure shall be made in accordance with the GSA regulations governing inspection of records for this purpose, and any other relevant (i.e., GSA or Commerce) directive. Such disclosure shall not be used to make determinations about individuals.

8. A record from this system of records may be disclosed, as a routine use, to the public after either publication of the application pursuant to 35 U.S.C. 122(b) or issuance of a patent pursuant to 35 U.S.C. 151. Further, a record may be disclosed, subject to the limitations of 37 CFR 1.14, as a routine use, to the public if the record was filed in an application which became abandoned or in which the proceedings were terminated and which application is referenced by either a published application, an application open to public inspections or an issued patent.

9. A record from this system of records may be disclosed, as a routine use, to a Federal, State, or local law enforcement agency, if the USPTO becomes aware of a violation or potential violation of law or regulation.

Bibliographic data

Title:	ORAL ILLUMINATOR
Pub/Pat no:	KR100654392B1
Pub/Issue Date:	2006-12-06
Inventor(s):	KIM JAE SOO[KR]|KIM JAE SOO
Applicant(s):	KIM JAE SOO[KR]
Classification:	A61C19/00AI; A61C17/08AI
Application number:	KR20050085004 2005-09-13
Priority number:	KR20050085004 2005-09-13;

Abstract of KR100654392B1

An oral illuminator is provided to secure a proper treatment space within a user's mouth easily by letting a user sticking out its tongue to the inner side with a tongue protection portion and fixing the movement of the user's tongue. The oral illuminator includes a tube connecting portion(10), a tongue protection portion(20) and a bite block(30). A tube connecting hole(11) is formed on the tube connection portion(10). An optic fiber and a light tube sucking materials within a mouth with air suction are coupled on one side of the tube connecting hole(11). The tongue protection portion(20) is formed on the central side to let a user stick out its tongue to the inner side with upper and lower wings(21,22). The bite block(30) is formed between the tongue protection portion(20) and the tube connecting portion(10) to be bitten by the user and be fixed within the mouth.

(19)대한민국특허청(KR)
(12) 등록특허공보(B1)

(51) 。Int. Cl.
A61C 19/00 (2006.01)
A61C 17/08 (2006.01)

(45) 공고일자 2006년12월06일
(11) 등록번호 10-0654392
(24) 등록일자 2006년11월29일

(21) 출원번호 10-2005-0085004
(22) 출원일자 2005년09월13일
심사청구일자 2005년09월13일

(65) 공개번호
(43) 공개일자

(73) 특허권자 김재수
서울 성북구 정릉동 1019 (27/6) 정릉성원아파트 102-1308

(72) 발명자 김재수
서울 성북구 정릉동 1019 (27/6) 정릉성원아파트 102-1308

(74) 대리인 이준영

(56) 선행기술조사문헌
JP10099270 A
JP14136529 A
KR02260530000 Y1
KR03594470000 Y1
KR19970064557 A
* 심사관에 의하여 인용된 문헌

심사관 : 김용일

전체 청구항 수 : 총 7 항

(54) 구강조명기

(57) 요약

본 발명은 구강 내의 적절한 치료 공간을 용이하게 확보하며, 구강 내부 전체를 골고루 밝게 하여, 안정적으로 구강 내 치료를 할 수 있게 하는 구강조명기에 관한 것이다. 상기한 구강 조명기는 구강 내부를 밝게 하는 광섬유가 삽입 결합되고 구강 내에서 고정되어 구강 내의 치료를 위한 구강조명기에 있어서, 광섬유가 결합되고 구강 내 물질을 공기흡입으로 빨아들이는 라이트튜브가 일측으로 결합되는 튜브결합공이 형성되는 튜브결합부와; 상하측의 날개에 의해 혀를 내측으로 밀도록 중앙측에 형성되는 혀보호부와; 상기 혀보호부와 상기 튜브결합부 사이에 사용자의 치아로 물어 구강 내에 고정이 용이하도록 상하측으로 형성되는 바이트블럭으로 구성된다.

대표도

도 1

특허청구의 범위

청구항 1.

구강 내에서 구강 내의 치료를 돕기 위한 장치에 있어서,

광섬유가 결합되고 구강 내 물질을 공기흡입으로 빨아들이는 라이트튜브가 일측으로 결합되는 튜브결합공이 형성되는 튜브결합부와,

상하측의 날개에 의해 혀를 내측으로 밀도록 중앙측에 형성되는 혀보호부와,

상기 혀보호부와 상기 튜브결합부 사이에 사용자의 치아로 물어 구강 내에 고정이 용이하도록 상하측으로 형성되는 바이트블럭을 구비하는 것을 특징으로 하는 구강조명기.

청구항 2.

제 1항에 있어서,

상기 혀보호부는 아치형으로 형성되어 혀를 내측으로 밀도록 하며, 상하측의 각 날개에 구강 내 물질을 흡입하기 위한 흡입세공이 형성되는 것을 특징으로 하는 구강조명기.

청구항 3.

제 2항에 있어서,

상기 혀보호부는 상하측의 각 날개가 한 쌍의 날개인 제1날개 및 제2날개로 구비되며, 상기 제1날개와 제2날개 사이의 일측과 상기 튜브결합부의 내측을 연결하는 제1흡입공 및 제2흡입공이 형성되는 것을 특징으로 하는 구강조명기.

청구항 4.

제 1항에 있어서,

상기 바이트블럭은 사용자의 이가 결합되는 블럭요홈과 상기 블럭요홈의 양측으로 돌출된 돌기인 블럭돌기를 형성하는 것을 특징으로 하는 구강조명기.

청구항 5.

제 1항 내지 제 4항 중 어느 한 항에 있어서,

상기 튜브결합부는 상기 광섬유의 끝단이 삽입 결합되는 광섬유결합공이 상기 튜브결합공 내측에 형성되는 것을 특징으로 하는 구강조명기.

청구항 6.

제 5항에 있어서,

상기 튜브결합부는 상기 바이트블럭 내측에 형성된 통공과 연결되어 구강 내 물질을 흡입하도록 하는 블럭흡입공이 형성된 것을 특징으로 하는 구강조명기.

청구항 7.

제 6항에 있어서,

상기 혀보호부를 중심으로 하여 상기 튜브결합부의 타측으로 날개형상의 볼지지부가 더 형성되는 것을 특징으로 하는 구강조명기.

명세서

발명의 상세한 설명

발명의 목적

발명이 속하는 기술 및 그 분야의 종래기술

본 발명은 구강조명기에 관한 것으로, 보다 상세하게는 구강 내의 적절한 치료 공간을 용이하게 확보하며, 구강 내부 전체를 골고루 밝게 하여, 안정적으로 구강 내 치료를 할 수 있게 하는 구강조명기에 관한 것이다.

일반적으로 구강 내부의 치료에는 치과치료, 임파선 치료 외에도 구강 내의 많은 부위에 대한 치료가 있다. 이러한 구강 내부를 시술하는 중 석션을 위한 어시스턴트가 필요하며 아무리 경력이 많은 어시스트라고 하여도 완벽히 석션을 할 수 없었다.

이와 같은 종래의 구강 내 치료에 있어서, 보조원들은 구강 내에 조명을 비추며, 구강 내에 발생되는 침 또는 시술에 의해 발생되는 구강 내 물질을 외부로 배출 하는 등의 보조작업을 하게 된다. 그러나 이러한 다수의 인원에 의해 보조를 받으며 시술하게 되더라도 각각 별도로 움직이기 때문에 시술자가 시술 중 정확한 시술이 어려웠다. 또한 시술 중 혀의 움직임 때문에 구강 내에서 이루어지는 작업이 쉽지 않았으며 시술 중 환자의 구강위치에 따라 조명등의 위치 또한 계속적으로 조절해 주어야 하며 석션라인을 계속적으로 움직여 시술자가 시술 중 어려움이 많아, 구간 내부의 시술이 곤란한 문제점이 많았다.

발명이 이루고자 하는 기술적 과제

본 발명은 상기와 같은 문제점을 해소하기 위한 안출된 것으로, 본 발명의 목적은 아치형으로 형성된 혀보호부에 의하여 혀를 내측으로 밀어 혀의 움직임을 고정하고, 볼지지부에 의하여 일측 볼을 외부로 밀게 되어, 결국 구강 내의 적절한 치료 공간을 용이하게 확보하며, 사용자의 이가 결합되는 바이트블럭에 의하여 사용자의 치아로 구강조명기를 안정적으로 고정하며, 내부에서 빛을 발산하도록 하여 구강 내부 전체를 골고루 밝게 하기 때문에, 시술자는 안정적으로 구강 내 치료를 할 수 있도록 하는 구강조명기를 제공하는 것이다.

발명의 구성

상기와 같은 목적을 달성하기 위한 본 발명의 구강조명기는 구강 내부를 밝게 하는 광섬유가 삽입 결합되고 구강 내에서 고정되어 구강 내의 치료를 위한 구강조명기에 있어서, 광섬유가 결합되고 구강 내 물질을 공기흡입으로 빨아들이는 라이트튜브가 일측으로 결합되는 튜브결합공이 형성되는 튜브결합부와; 상하측의 날개에 의해 혀를 내측으로 밀도록 중앙측에 형성되는 혀보호부와; 상기 혀보호부와 상기 튜브결합부 사이에 사용자의 치아로 물어 구강 내에 고정이 용이하도록 상하측으로 형성되는 바이트블럭으로 구성되는 것을 특징으로 한다.

여기서, 상기 혀보호부는 아치형으로 형성되어 혀를 내측으로 밀도록 하며, 상하측의 각 날개에 구강 내 물질을 흡입하기 위한 흡입세공이 형성되는 것을 특징으로 한다.

또한, 상기 혀보호부는 상하측의 각 날개가 한 쌍의 날개인 제1날개 및 제2날개로 구비되며, 상기 제1날개와 제2날개 사이의 일측과 상기 튜브결합부의 내측을 연결하는 제1흡입공 및 제2흡입공이 형성되는 것을 특징으로 한다.

또한, 상기 바이트블럭은 사용자의 이가 결합되는 블럭요홈과 상기 블럭요홈의 양측으로 돌출된 돌기인 블럭돌기를 형성하는 것을 특징으로 한다.

또한, 상기 튜브결합부는 상기 광섬유의 끝단이 삽입 결합되는 광섬유결합공이 상기 튜브결합공 내측에 형성되는 것을 특징으로 한다.

또한, 상기 튜브결합부는 상기 바이트블럭 내측에 형성된 통공과 연결되어 구강 내 물질을 흡입하도록 하는 블럭흡입공이 형성되는 것을 특징으로 한다.

또한, 상기 혀보호부를 중심으로 하여 상기 튜브결합부의 타측으로 날개형상의 볼지지부가 더 형성되는 것을 특징으로 한다.

상기한 본 발명 구성을 첨부된 도면에 도시된 일 실시례를 참조하여 상세히 설명하면 다음과 같다.

도 1은 본 발명 구강조명기에 대한 사시도이고, 도 2는 본 발명 구강조명기와 라이트튜브의 분해 예시도이고, 도 3은 본 발명 구강조명기를 입에 착용하는 것에 대한 예시도이고, 도 4는 본 발명 구강조명기를 착용한 상태에 대한 예시도를 나타낸 것으로 설명의 편의상 함께 설명하기로 한다.

도시된 바와 같이, 본 발명에 따른 구강조명기(1)는, 구강 내부를 밝게 하는 광섬유(2)가 삽입 결합되어 구강 내측을 밝게 하여 구강 내에서 고정되어 구강 내의 치료가 원활하도록 구비된 것이다.

또한, 광섬유(2)가 결합되고 구강 내 물질을 공기흡입으로 빨아들이는 작용을 하는 도 2에서와 같은 라이트튜브(3)가 일측으로 결합되는 튜브결합공(11)이 형성되는 튜브결합부(10)를 형성한다.

이때, 라이트튜브(3)는 미도시된 장치인 라이트소스장치 및 공기흡입장치와 연결되어, 구강 내에 조명을 제공하여 구강 내를 밝게 할 뿐만 아니라, 구강 치료 시에 구강 내에 발생되는 침 또는 각종 제거해야 하는 물질을 흡입하도록 하는 구비된 것이다. 이때 구강조명기(1)는 대체로 투명한 재질 또는 불투명하더라도 빛이 적절히 굴절 및 반사되어 빛을 흡수하지 않고 구강 내부를 골고루 비출 수 있도록 함이 바람직하다. 그 재질은 실리콘 등의 합성수지재(플라스틱재) 또는 그 등가물일 수 있으며, 그 재질에 제한되는 것은 아니다. 아울러, 전체를 단일체로 형성하여, 구강 내 치료시에도 본 발명 구강조명기(1)가 분리되지 않도록 함이 바람직하다.

이와 같은 구강조명기(1)는 상하측의 날개(21)(22)에 의해 사용자의 혀를 내측으로 밀도록 구강조명기(1)의 중앙부분에 혀보호부(20)를 구비한다. 이러한 상기 혀보호부(20)와 상기 튜브결합부(10) 사이에는 사용자의 치아로 물어 구강 내에 고정이 용이하도록 상하측으로 형성되는 바이트블럭(30)(30a)을 구비한다.

여기서, 상기 혀보호부(20)는 아치형으로 형성되어 혀를 내측으로 밀도록 하며, 상하측의 각 날개(21)(22)에 구강 내 물질을 흡입하기 위한 흡입세공(23)(23a)을 형성하였으며, 또한, 각각 한 쌍의 날개인 제1날개(24) 및 제2날개(25)를 구비하며, 상기 제1날개(24)와 제2날개(25) 사이의 일측과 상기 튜브결합부(10)의 내측 튜브결합공(11)의 일측을 연결하는 제1흡입공(51) 및 제2흡입공(52)을 형성한다. 이와 같이 구비되는 제1흡입공(51) 및 제2흡입공(52)에 의하여, 상하측의 제1날개(24) 및 제2날개(25) 사이로 흡입되는 침 또는 구강 내 물질을 빨아들여 외부로 배출이 용이하게 된다.

또한, 상기 바이트블럭(30)은 사용자의 이가 결합되는 블럭요홈(31)과 상기 블럭요홈(31)의 양측으로 각각 돌출된 돌기인 블럭돌기(32)를 형성한다. 사용자의 치아는 블럭요홈(31) 부분을 물게 되면서, 블럭돌기(32)에 의해 지지되는 사용자의 치아가 바이트블럭(30)과 견고하게 지지되어, 사용자가 구강 내 치료를 받아도 구강조명기(1)가 요동되지 않게 된다.

아울러, 상기 튜브결합부(10)는 상기 광섬유(2)의 끝단이 삽입 결합되는 광섬유결합공(53)이 상기 튜브결합공(11) 내측에 형성되어, 튜브결합공(11) 내에 라이트튜브(3)를 결합한 상태에서 시술자의 조작에 의하여 광섬유결합공(53)에 광섬유(2)를 적절히 위치시키게 되면, 광섬유(2)로부터 발광되는 빛이 구강 내의 전체를 밝게 비추도록 구비한 것이다.

이에 더하여 상기 바이트블럭(30) 내측에 형성된 통공과 연결되어 구강 내 물질을 흡입하도록 하는 블럭흡입공(54)이 튜브결합부(10)의 튜브결합공(11) 내부 일측에 형성되도록 한다.

상기한 본 발명 구강조명기(1)에는 상기 혀보호부(20)를 중심으로 하여 튜브결합부(10)의 타측으로는 날개형상의 볼지지부(40)를 더 형성하였다. 그리하여 도 3에서와 같이 시술자의 일측 손으로 볼지지부(40)를 잡고 사용자의 입에 착용하도록 하며, 시술 시에는 사용자의 볼 부분의 구강 내측에 볼지지부(40)가 지지되어, 결국 볼 부분을 외향으로 밀어 구강 내의 시술 공간을 넓게 확보할 수가 있다.

이와 같이 구성되는 본 발명 구강조명기(1)에 의한 시술 과정을 살펴보면 다음과 같다.

즉, 도 3 및 도 4에서와 같이, 사용자(치료 대상자)의 구강 내에 구강조명기(1)를 착용하기 전에, 도 2에서와 같이, 광섬유(2)가 내측에 구비되는 라이트튜브(3)의 끝단을 구강조명기(1)의 튜브결합부(10)의 튜브결합공(11) 내측으로 삽입 결합하게 된다. 이와 같은 라이트튜브(3)는 상기에서 언급한 바와 같이, 광섬유(2)를 통하여 빛을 발산하도록 하는 라이트소스장치(Compact Fiber Optic Light Source)와, 또한 침 또는 구강 내 물질을 공기의 흡입 압력으로 외부로 배출하기 위한 진공흡입장치와 연결되어 구비되는 것이다.

이와 같이 라이트튜브(3)와 결합된 상태에서 조작에 의하여 광섬유(2)의 끝단이 광섬유결합공(53)에 알맞게 위치하게 되며, 이와 같이 알맞은 위치에 광섬유(2)의 끝단이 위치하게 되면, 구강 내 전체적으로 골고루 밝게 비춰지도록 구강조명기(1)의 재질 및 형상을 알맞게 하였다. 즉 다수의 절곡부를 형성하는 등의 방법으로 투명, 불투명 또는 반투명 재질로 구강조명기(1) 전체를 일체로 형성하게 되면, 내측 일측에서 발산된 빛은 구강조명기(1) 물질 내부로 투여된 빛이 외부로 일부가 방출됨과 동시에 일부 빛은 내부와 외부의 경계에 의해 내부 반사되며, 이때 본 발명 구강조명기(1)의 많은 굴곡 형상 때문에 더욱 넓게 빛이 퍼지게 되어, 결국 구강 내부 전체를 골고루 비추게 되는 것이다.

이와 같이 라이트튜브(3) 및 광섬유(2)를 결합한 상태에서, 도 3에서와 같이 시술자의 일측 손은 튜브결합부(10)를 잡고 타측 손은 볼지지부(40)를 잡고 사용자의 구강 내측으로 착용하게 되면, 사용자는 치아로 상하측의 바이트블럭(30)을 물어 구강 내에서 구강조명기(1)가 요동되지 않도록 한다. 그 후, 도 4에서와 같이 볼지지부(40)를 치아 바깥쪽의 구강 내부로 넣어 일측 볼이 외향으로 밀려 결국 치료공간이 넓게 형성되는 것이다.

이와 같이 구비되는 구강조명기(1)에 의하면, 아치형으로 형성된 혀보호부(20)에 의하여 혀를 내측으로 밀어 혀의 움직임을 고정하고, 볼지지부(40)에 의하여 일측 볼을 외부로 밀게 되어, 결국 구강 내의 치료 공간을 적절히 확보할 수 있게 된다.

또한 사용자의 이가 결합되는 바이트블럭(30)에 의하여 사용자의 치아로 구강조명기(1)를 안정적으로 고정하게 되며, 구강조명기(1)의 내부에서 빛을 발산하도록 하여 구강 내부 전체를 골고루 밝게 하기 때문에, 시술자는 안정적으로 구강 내 치료를 할 수 있게 되는 것이다.

그리고 흡입세공(23)(23a) 및 제1흡입공(51), 제2흡입공(52)과 함께 블럭흡입공(54)을 통하여, 구강 내에 생기는 침 또는 구강 내 물질을 계속하여 외부로 배출하기 때문에, 구강 내에는 항상 시술이 용이한 환경을 유지할 수 있게 된다.

발명의 효과

상기와 같이 구비되는 본 발명의 구강조명기에 의하면, 아치형으로 형성된 혀보호부에 의하여 혀를 내측으로 밀어 혀의 움직임을 고정하고, 볼지지부에 의하여 일측 볼을 외부로 밀게 되어, 결국 구강 내의 적절한 치료 공간을 용이하게 확보하며, 사용자의 이가 결합되는 바이트블럭에 의하여 사용자의 치아로 구강조명기를 안정적으로 고정하며, 내부에서 빛을 발산하도록 하여 구강 내부 전체를 골고루 밝게 하며, 다수의 흡입공에 의하여 구강 내 물질을 외부로 배출하기 때문에, 시술자는 안정적으로 구강 내 치료를 할 수 있게 되는 효과가 있다.

도면의 간단한 설명

도 1은 본 발명 구강조명기에 대한 사시도이다.

도 2는 본 발명 구강조명기와 라이트튜브의 분해 예시도이다.

도 3은 본 발명 구강조명기를 입에 착용하는 것에 대한 예시도이다.

도 4는 본 발명 구강조명기를 착용한 상태에 대한 예시도이다.

<도면의 주요부분에 대한 부호의 설명>

1 : 구강조명기

2 : 광섬유 3 : 라이트튜브

10 : 튜브결합부 11 : 튜브결합공

20 : 혀보호부 30 : 바이트블럭

31 : 블럭요홈 32 : 블럭돌기

40 : 볼지지부 53 : 광섬유결합공

도면

도면1

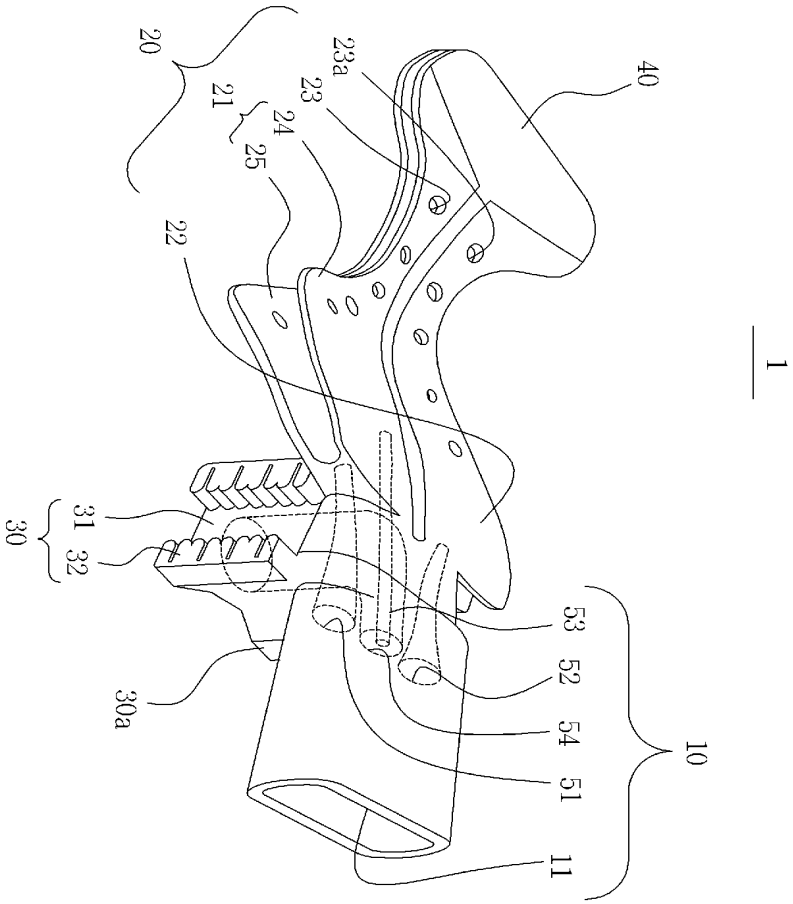

도면2

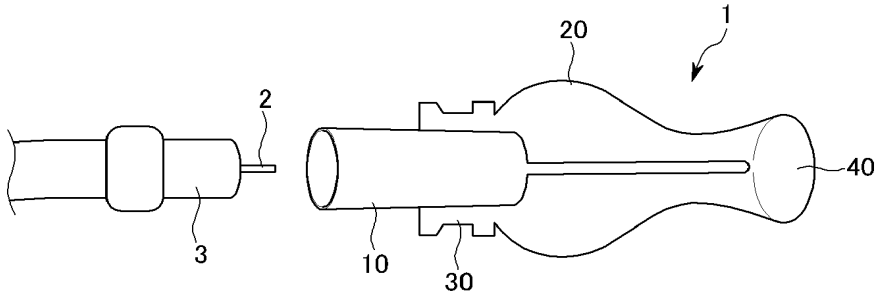

도면3

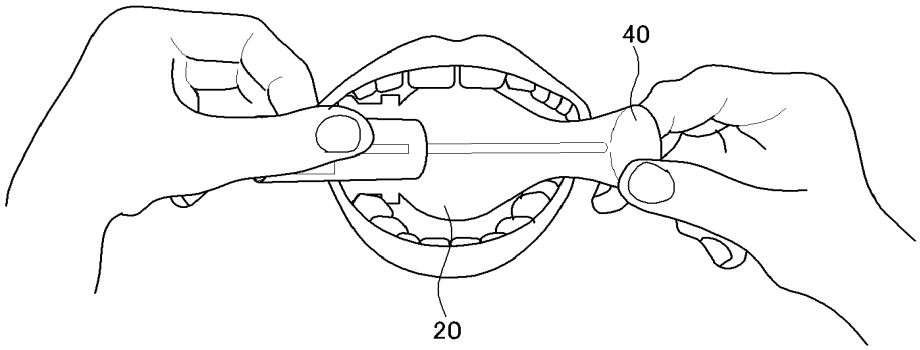

도면4

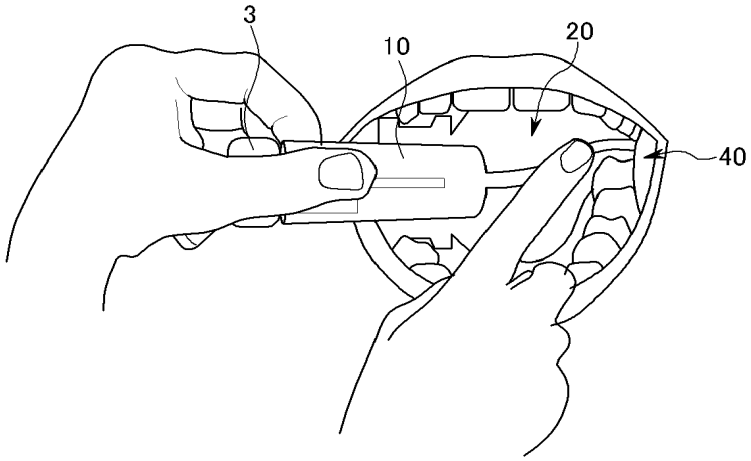

PCT WORLD INTELLECTUAL PROPERTY ORGANIZATION
International Bureau

INTERNATIONAL APPLICATION PUBLISHED UNDER THE PATENT COOPERATION TREATY (PCT)

(51) International Patent Classification 7 : A61C 5/00 | A1

(11) International Publication Number: **WO 00/42939**

(43) International Publication Date: 27 July 2000 (27.07.00)

(21) International Application Number: PCT/US00/01577

(22) International Filing Date: 21 January 2000 (21.01.00)

(30) Priority Data:
09/234,588 21 January 1999 (21.01.99) US

(71)(72) Applicant and Inventor: ENGERON, Michael, G. [US/US]; 206 Mystic Boulevard, Houma, LA 70360–2762 (US).

(74) Agents: SMITH, Gregory, C. et al.; Garvey, Smith, Nehrbass & Doody L.L.C., 3 Lakeway Center, Suite 3290, 3838 North Causeway Boulevard, Metairie, LA 70002 (US).

(81) Designated States: AE, AL, AM, AT, AT (Utility model), AU, AZ, BA, BB, BG, BR, BY, CA, CH, CN, CR, CU, CZ, CZ (Utility model), DE, DE (Utility model), DK, DK (Utility model), DM, EE, EE (Utility model), ES, FI, FI (Utility model), GB, GD, GE, GH, GM, HR, HU, ID, IL, IN, IS, JP, KE, KG, KP, KR, KR (Utility model), KZ, LC, LK, LR, LS, LT, LU, LV, MA, MD, MG, MK, MN, MW, MX, NO, NZ, PL, PT, RO, RU, SD, SE, SG, SI, SK, SK (Utility model), SL, TJ, TM, TR, TT, TZ, UA, UG, US, UZ, VN, YU, ZA, ZW, ARIPO patent (GH, GM, KE, LS, MW, SD, SL, SZ, TZ, UG, ZW), Eurasian patent (AM, AZ, BY, KG, KZ, MD, RU, TJ, TM), European patent (AT, BE, CH, CY, DE, DK, ES, FI, FR, GB, GR, IE, IT, LU, MC, NL, PT, SE), OAPI patent (BF, BJ, CF, CG, CI, CM, GA, GN, GW, ML, MR, NE, SN, TD, TG).

Published
With international search report.

(54) Title: IMPROVED RETRACTOR APPARATUS

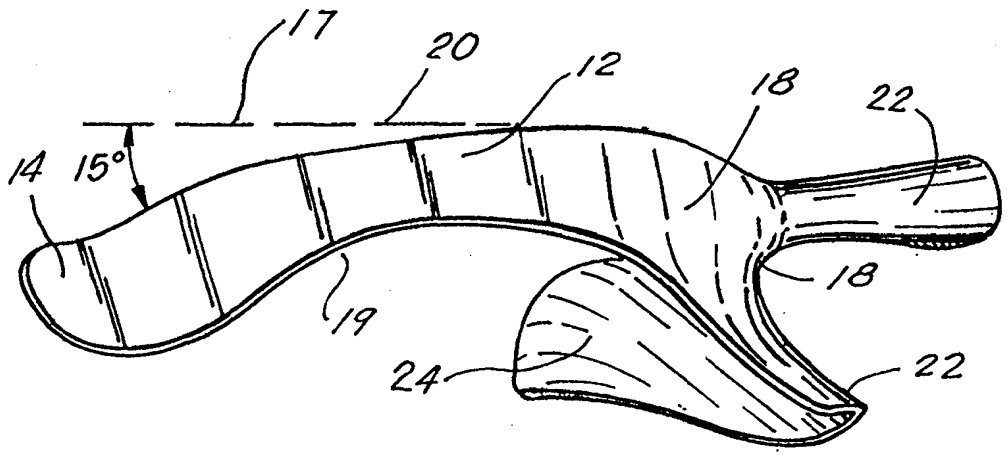

(57) Abstract

This invention is a improved retractor apparatus for conducting orthodontic procedures in a dry field, the retractor including a first arm portion (12) for extending along the outer surface of a patient's cheek that can be grasped by the orthodontist performing the procedure; a second lower lip depressor portion (22) concavely formed for pressing against the lower lip as the orthodontist grasps the handle portion, a third cheek retractor portion (24) extending from the bridge (lip retractor) portion into the mouth of the patient and formed in a biconvex fashion to curve along the inner surface of thecheek of the patient; an upper lip retractor portion (29) that retracts, and elevates the upper lip as the apparatus is manipulated by the dentist; a bridge member situated at the confluence of the first arm, (handle) portion; the second arm (lower lip depressor) portion; the third arm (cheek retractor) portion; and the fourth arm (upper lip retractor) portion.

FOR THE PURPOSES OF INFORMATION ONLY

Codes used to identify States party to the PCT on the front pages of pamphlets publishing international applications under the PCT.

AL	Albania	**ES**	Spain	**LS**	Lesotho	**SI**	Slovenia
AM	Armenia	**FI**	Finland	**LT**	Lithuania	**SK**	Slovakia
AT	Austria	**FR**	France	**LU**	Luxembourg	**SN**	Senegal
AU	Australia	**GA**	Gabon	**LV**	Latvia	**SZ**	Swaziland
AZ	Azerbaijan	**GB**	United Kingdom	**MC**	Monaco	**TD**	Chad
BA	Bosnia and Herzegovina	**GE**	Georgia	**MD**	Republic of Moldova	**TG**	Togo
BB	Barbados	**GH**	Ghana	**MG**	Madagascar	**TJ**	Tajikistan
BE	Belgium	**GN**	Guinea	**MK**	The former Yugoslav Republic of Macedonia	**TM**	Turkmenistan
BF	Burkina Faso	**GR**	Greece			**TR**	Turkey
BG	Bulgaria	**HU**	Hungary	**ML**	Mali	**TT**	Trinidad and Tobago
BJ	Benin	**IE**	Ireland	**MN**	Mongolia	**UA**	Ukraine
BR	Brazil	**IL**	Israel	**MR**	Mauritania	**UG**	Uganda
BY	Belarus	**IS**	Iceland	**MW**	Malawi	**US**	United States of America
CA	Canada	**IT**	Italy	**MX**	Mexico	**UZ**	Uzbekistan
CF	Central African Republic	**JP**	Japan	**NE**	Niger	**VN**	Viet Nam
CG	Congo	**KE**	Kenya	**NL**	Netherlands	**YU**	Yugoslavia
CH	Switzerland	**KG**	Kyrgyzstan	**NO**	Norway	**ZW**	Zimbabwe
CI	Côte d'Ivoire	**KP**	Democratic People's Republic of Korea	**NZ**	New Zealand		
CM	Cameroon			**PL**	Poland		
CN	China	**KR**	Republic of Korea	**PT**	Portugal		
CU	Cuba	**KZ**	Kazakstan	**RO**	Romania		
CZ	Czech Republic	**LC**	Saint Lucia	**RU**	Russian Federation		
DE	Germany	**LI**	Liechtenstein	**SD**	Sudan		
DK	Denmark	**LK**	Sri Lanka	**SE**	Sweden		
EE	Estonia	**LR**	Liberia	**SG**	Singapore		

TITLE OF THE INVENTION

"IMPROVED RETRACTOR APPARATUS"

CROSS-REFERENCE TO RELATED APPLICATIONS

Priority of US Patent Application Serial No. 09/234,588 filed January 21, 1999, incorporated herein by reference, is hereby claimed.

STATEMENT REGARDING FEDERALLY SPONSORED RESEARCH OR DEVELOPMENT

Not applicable

REFERENCE TO A "MICROFICHE APPENDIX"

Not applicable

BACKGROUND OF THE INVENTION

1. Field of the Invention

The apparatus of the present invention relates to dental appliances. More particularly, the present invention relates to an improved retractor apparatus for retracting certain areas of a patient's mouth such as the lips and the cheek in order to allow greater access to the patient's mouth during dental work such as orthodontics.

2. General Background

Quite often in conducting dental work on a patient, such as orthodontics or the like type of operation, there is a requirement that the patient's lip and cheek be positioned so as to allow the dentist maximum access to the area of the mouth in which the operation will be conducted, which in most cases is in the area of the rear teeth such as the wisdom teeth or molars. Furthermore, during certain procedures such as those conducted by an orthodontist, it is important to retract the soft tissue away from the teeth undergoing the orthodontic procedure in order to provide comfortable access to a dry field, including the buccal surfaces of maxillary and mandibular second molars simultaneously, for allowing

bonding of orthodontic appliances, such as braces, to the teeth.

While this is an important aspect of an appliance that would be utilized in order to meet these requirements, it is also important that the patient who is normally awake and aware and unanesthetized, be in as much comfort as possible during the procedure.

For example, there are appliances known in the art which have been utilized for affording access into a patient's mouth during a procedure. One of the more common types of retractors is called a Bishop Retractor, which is a surgical instrument apparatus which is grasped by a standing surgeon or an assistant who holds the cheek of the patient out with one hand while he, the surgeon, conducts a surgical procedure with the other hand. The Bishop retractor is a rather simple instrument, and is used primarily, if not exclusively, in surgical procedures while the patient is anesthetized.

Secondly, U.S. Patent No. 5,730,597, which was patented by Clifford Luttrell, and assigned to the United States of America, teaches a flat, buccal retractor which attempts to solve the problem in the art. However, this instrument butt or end is quite narrow and sharp which would lead to discomfort for the patient, and also would not allow for keeping soft tissue and saliva out of the field in an orthodontic procedure The narrow sharp-ended cheek retractor of Luttrell is designed to be used in an operating room setting by a standing surgeon on a fully anesthetized patient. It is designed to retract unsurgerized tissue to allow access to that soft tissue on the stretch to facilitate surgerizing the stretched tissue. Furthermore, it could be used to retract surgerized tissue to allow visualization of, and access to, the bony maxilla beneath the soft tissue in order to allow instrumentation, irrigation, and cutting of the bony jaw with a rotary or reciprocating instrument. Again, these procedures are normally done in a wet field on an anesthetized patient by a standing surgeon.

The Luttrell instrument, in one embodiment, retracts either the left upper lip or the right lower lip, but not simultaneously. The other, mirror form of the instrument retracts the left lower lip or right upper lip, but again, not simultaneously. Therefore, there is a need in the industry for providing an improved retractor apparatus which would allow a dentist to work in a dry field for doing, in particular, orthodontic procedures, and shaped in order to have greater comfort for the patient. and so constructed so that the instrument allows the left upper and lower lips, as well as the lip commissure and cheek, to be retracted simultaneously by the orthodontist. The mirror image instrument would

be used to retract the right upper and lower lips, as well as the right commissure and cheek. Furthermore, there is a need to allow such a device to be utilized wherein the dentist or orthodontist may conduct the procedure while being seated rather than having to hover over the patient, which one may have to do if one utilized the Luttrell device in the procedure.

BRIEF SUMMARY OF THE INVENTION

The apparatus of the present invention solves the shortcomings in the art in a simple and straightforward manner. What is provided is an improved retractor apparatus for conducting orthodontic procedures in a dry field, the retractor including a first arm portion for extending along the outer surface of a patient's cheek that can be grasped by the orthodontist performing the procedure; a second lower lip depressor portion concavely formed for pressing against the lower lip as the orthodontist grasps the handle portion, a third cheek retractor portion extending from the bridge (lip retractor) portion into the mouth of the patient and formed in a biconvex fashion to curve along the inner surface of the cheek of the patient; a fourth upper lip retractor portion that retracts and elevates the upper lip as the apparatus is manipulated by the dentist, a bridge member situated at the confluence of the first arm, (handle) portion, the second arm (lower lip depressor) portion, the third arm (cheek retractor) portion and the fourth arm (upper lip retractor) portion. The long axis of the handle portion extends at an incline relative to the lip depressor and cheek retractor portions for defining a thin waist portion on the handle so that the end of the handle may be grasped to depress the patient's lower lip, retract the upper lip, and to extend the cheek of the patient outward so as to provide an increased volume of space for conducting the orthodontic procedure in a dry field.

Therefore, it is a principal object of the present invention to provide a dental appliance which allows an orthodontist to conduct procedures on a patient who is awake while in greater comfort and retracting the lips and cheek portions away from the patient's teeth in order to establish a dry field comfortably within the mouth;

It is a further principal object of the present invention to provide an improved retractor apparatus for placement in a patient's mouth so that the apparatus may be held by a handle portion while the orthodontist is sitting, and as the handle portion is pulled on a slight incline, there is provided a lower lip depressor portion, an upper lip retractor

portion, and cheek retractor portion for establishing greater access to the patient's dry teeth while the patient is awake and substantially comfortable;

It is a further object of the present invention to provide an improved retractor apparatus which provides for substantially greater operational features in the prior art, and allows an orthodontist to undertake procedures while being seated yet while simultaneously having access to the patient's mouth in a dry field.

BRIEF DESCRIPTION OF THE DRAWINGS

For a further understanding of the nature, objects, and advantages of the present invention, reference should be had to the following detailed description, read in conjunction with the following drawings, wherein like reference numerals denote like elements and wherein:

Figures 1-8 illustrate various views of the preferred embodiment of the improved retractor apparatus of the present invention;

Figures 9A and 9B illustrate views of the apparatus placed in a patient's mouth during an orthodontic procedure;

Figure 10 illustrates a view of the apparatus in a patient's mouth while the apparatus is held by the orthodontist;

Figures 11A and 11B illustrate the lower lip depressor portion, the bridge portion, the upper lip retractor portion and the cheek retractor portion respectively of the apparatus of the present invention;

Figures 12A and 12B illustrates the apparatus of the present invention being utilized with a dental appliance such as a polishing instrument;

Figure 13 illustrates an isolated view of the apparatus retracting the lower lip of a patient during use and

Figure 14 illustrates a bottom view of the apparatus being utilized to retract the cheek and lower lip of a patient as the teeth are being polished with a dental instrument.

DETAILED DESCRIPTION OF THE INVENTION

Figures 1-14 illustrated the preferred embodiment of the apparatus of the present invention by the numeral 10. As illustrated in various views of the apparatus, particularly as seen in Figures 1-8, there is illustrated improved retractor apparatus 10 which would comprise various portions, some portions which are more clearly illustrated in certain

figures than others. For example, in Figure 1 there is illustrated apparatus 10 having the exterior handle portion 12, handle portion 12 having an enlarged end portion 14 and a center waist portion 16 which then would emerge into a substantially centralized bridge portion 18. The handle portion 12 is shaped so that the thin waist portion 16 allows for firmly grasping the handle during use and retraction without allowing the fingers to slip from the handle 12.

For purposes of further explanation of the construction of handle portion 12, reference is made to Figure 3 where handle portion 12 is illustrated, and it is seen that the handle portion 12 is substantially elongated and terminates in the enlarged portion 14, the handle portion being somewhat thin in overall thickness along edge 19, and having an overall arcuate shape along line 20 as seen in Figure 3. Again, it is seen as the handle portion terminates at bridge portion 18 there is formed the three other principal portions of the apparatus 10. There is first seen the lower lip depressor portion 22 and as seen clearly in Figure 1, the cheek retractor portion 24 as seen more clearly in Figure 2, and the upper lip retractor portion 29 as seen in Figures 1, 2 and 3. As seen in Figures 1-8, the lower lip depressor portion 22 includes an arcuate extended member 25 having an outer convex surface 26 and an interior concave surface 28. The concavity 28 is formed the length of the lip depressor portion 22 and would essentially engage the lower lip during use of the apparatus as will be explained further. The upper lip retractor portion 29 is also concave along surface 31 to engage and retract the upper lip comfortably. The bridge portion serves to retract the commissure of the mouth and as the confluence of the handle, upper lip retractor, lower lip retractor, and cheek retractor portions.

Turning now to the cheek retractor portion 24, it is seen that the cheek retractor portion 24 is seen clearly for example in Figure 6. Again, as seen in Figure 6 there is illustrated the handle portion 12, the lower lip depressor portion 22, the cheek retractor portion 24 and the upper lip retractor portion 29. As illustrated, cheek retractor portion 24 is formed from the bridge portion 18 of the apparatus 10, and forms substantially a U shape extending substantially in the same direction of handle 12. The cheek retractor portion 24 has a concave surface 26 and a substantially convex surface 28 as seen in Figures 6-8, the convex surface 28 being inserted into the mouth of the patient and pressing against the interior surface of the cheek as it is placed within the mouth of the patient. Further, which is not clearly seen in Figure 6, but is seen in Figure 7, is that the

cheek retractor portion 24, which illustrates the concave surface 28, would be pressed against the patient's cheek 39 as will be described further. However, as seen more clearly in Figure 7, concave surface 28 terminates in a biconvex end portion 27 which would when placed in the patient's mouth press against the rear wall of the patient's mouth deep in the vestibule 44 while the apparatus is being used. Again, this biconvex portion 27 would be seen again in Figure 9B as will be described further.

For example, turning now to Figure 9A, there is illustrated a patient 30 having the apparatus 10 inserted in the patient's mouth. As clearly seen, the hand 32 of the dentist is holding the handle portion 12 of the apparatus while the lower lip depressor portion 22 is holding the lower lip 35 of the patient 30 in the channel 28 formed by the lip depressor portion 22. Simultaneously, the cheek retractor portion 24 has been inserted and is pressing against the interior surface 38 of the patient's cheek, and retracting the cheek 39 of the patient outward in the direction of arrow 40. In this manner, there is then seen the lower lip 35 being depressed by depressor portion 22 cheek 39 being extended outward by the cheek retractor portion 24, and the upper lip being retracted upward by portion 29. There is defined a dry vestibule 44 within the mouth of the patient 30 for conducting orthodontic procedures. This is seen again in close up view in Figure 9B as was described earlier.

Again, as seen in Figure 10, the apparatus 10 is seen being held again by hand 32 with the patient 30 resting her head back while the apparatus has been inserted within her mouth. The handle portion 12 is grasped by the dentist's hand 32 and the lower lip 35 is being depressed downward while the cheek retractor portion 24 is pushing the cheek 35 outward and the upper lip is being retracted upward so as to have easy access to the buccal surfaces of the patent's upper and lower posterior teeth. It should be noted that because of the position of the handle portion 12 of the apparatus and for example as seen in Figure 3 the long axis of the handle portion 12 is approximately a 15 degree angle from the horizontal line 17. This allows a dentist to conduct work on the patient while being seated because of the angulation of the handle, so that when one pulls back it automatically retracts the cheek slightly outward and the lower lip is pushed further downward while the upper lip is retracted upward

Turning now to Figures 11A and 11B, there is seen, again in 11A, an isolated view of the lower lip depressor portion 22 pressing downward on the lip 35 to provide

a greater volume of space in vestibule 44 for conducting work. As seen in 11B, the cheek retractor portion 24 extends from the bridge portion 18, and pushes the cheek outward while the very end 25 of the cheek retractor portion 24 is curving against the rear 27 of the mouth in the vestibule 44 in order to provide an entire arcuate retraction of the cheek along its inner surface as seen in 11B. In Figures 12A and 12B, the apparatus 10 is again illustrated so that a lip 35 is depressed downward by depressor portion 22, the cheek of the patient is retracted outward by the cheek retractor portion 24 and the upper lip is retracted up and away from the teeth by portion 29 so that the vestibule 44 within the patient's mouth is quite enlarged and an instrument 50, such as the type of instruments that would be used to bond orthodontic appliances can be inserted easily into the vestibule 44 for making direct contact with the patient's teeth 52, particularly the rear most teeth which are normally very difficult to access during the procedure.

Again, as was discussed earlier, Figure 13 is an isolated view of the patient's lower lip 35 being depressed downward by lip depressor portion 22 of apparatus 10 in the view.

In Figure 14, there is seen a substantially bottom view of the apparatus, again showing the linear formation of handle 10 with its slight curvature directed to bridge portion 18 wherein there is seen the lower lip depressor portion 22, the cheek retractor portion 24, and the upper lip retractor portion 29. As seen in this particular view, there is provided in phantom view the cheek 39 of the patient held within the opening 47 formed between the handle 12 and the cheek retractor portion 24 so that as the handle 12 is pulled in the direction of arrow 60, the cheek is pulled outward so that a cleaning instrument 50 of the type as was seen in Figures 12A and 12B may be utilized against the teeth 52 of a patient during use.

In the preferred embodiment, the apparatus of the present invention could be formed of any material such as stainless steel or molded plastic, which would be durable and light weight and would be the type of material that can be sterilized and used in the oral environment during orthodontic work. Of course, when the implement would be used on the left side, it would be a mirror image of a second implement that would have to be used on the right side by the orthodontist during orthodontic procedures or the like. The instruments would be provided in a mirror image pair. The instrument provided for use on the patient's right side would be a mirror image of that provided for use on the left.

The foregoing embodiments are presented by way of example only; the scope of the present invention is to be limited only by the following claims.

CLAIMS

1. An improved retractor apparatus, for use during dry orthodontic dental procedures on a patient, comprising:

a. an elongated handle portion, adapted to extend along the outer cheek for grasping by a person;

b. a lower lip depressor portion, further comprising a concave surface for engaging the lower lip;

c. a cheek retracting portion, adapted to be positioned against an interior surface of the cheek, and terminating in a biconvex end to conform to a rear portion of the cheek;

d. an upper lip retractor portion, for engaging and retracting the upper lip;

e. the lower lip depressor portion forcing the lower lip downward, the cheek retracting portion retracting the cheek outward, and the upper lip retractor portion retracting the upper lip outward, all simultaneously, as the handle portion is moved away from the cheek by the person, for providing visualization and access to the buccal surfaces of the teeth during the dry orthodontic procedure, defining a larger patient vestibule and for establishing a dry field for conducting the dental procedure in comfort.

2. The apparatus in claim 1, wherein a long axis of the handle portion is adapted to extend at an angle approximately 30 degrees from a long axis of the cheek retractor portion.

3. The apparatus in claim 1, wherein the bridge portion is situated at the commissure of the mouth during use.

4. The apparatus in claim 2, wherein the angulated position of the handle portion provides use of the apparatus while the user is seated.

5. The apparatus in claim 1, wherein the cheek retracting portion terminates in a biconvex end portion for conforming to the rear portion of the cheek of the patient, so as to provide a biconvex surface with which to comfortably retract the cheek during use.

6. The apparatus in claim 1, wherein the apparatus would be formed of molded plastic or stainless steel to be sterilizable for use in a patient's mouth.

7. An improved retractor apparatus, for use during dry orthodontic dental procedures, comprising:

a. a first elongated handle portion, adapted to extend along the outer cheek for grasping by a dentist;

b. a second lower lip depressor portion, further comprising a concave surface for engaging the lower lip;

c. a third cheek retractor portion, adapted to be positioned against an interior surface of the cheek;

d. a fourth upper lip retractor portion, for engaging and retracting the upper lip;

e. a bridge portion interconnecting the handle portion to the lower lip depressor portion, the cheek retractor portion, and the upper lip retractor portion; and

f. the second lower lip depressor portion forcing the lower lip downward, the cheek retracting portion retracting the cheek outward, and the upper lip retractor portion retracting the upper lip upward, all simultaneously, as the handle portion is pulled away from the cheek by the dentist, for defining a larger vestibule in the patient's mouth to obtain access to the buccal surfaces of the teeth, and for establishing the dry field for conducting the dental procedure.

8. The apparatus in claim 7, wherein a long axis of the handle portion is adapted to extend at an angle of approximately 30 degrees upward from the horizontal, using a long axis of the cheek retractor portion as the horizontal.

9. The apparatus in claim 7, wherein the angulation of the handle portion provides for use of the apparatus while the user is seated.

10. The apparatus in claim 7, wherein the cheek retracting portion terminates in

a biconvex end portion for conforming to the rear portion of the cheek of the patient.

11. The apparatus in claim 7, wherein the apparatus would be formed of molded plastic or stainless steel to be sterilizable for use in the mouth.

12. An improved retractor apparatus, for use during dry orthodontic dental procedures, comprising:

a. a first elongated handle portion, is adapted to extend along the outer cheek for grasping by a dentist;

b. a second lower lip depressor portion, further comprising a concave surface for engaging the lower lip;

c. a third cheek retractor portion, adapted to be positioned against an interior surface of the cheek;

d. a fourth upper lip retractor portion, for engaging and retracting the upper lip;

e. a bridge portion interconnecting the handle portion to the lower lip depressor portion, the cheek retractor portion, and the upper lip retractor portion and situated at the commissure of the mouth during use; and

f. the second lower lip depressor portion forcing the lower lip downward, the cheek retracting portion retracting the cheek outward, and the upper lip retractor portion retracting the upper lip upward, all simultaneously, as the handle portion is pulled away from the cheek by the dentist, for defining a larger vestibule in the patient's mouth, to obtain access to the buccal surfaces of the teeth and for establishing the dry field for conducting the dental procedure in greater comfort for the patient.

13. The apparatus in claim 12, wherein the long axis of the handle portion is adapted to extend at an angle of approximately 30 degrees from the long axis of the cheek retractor portion.

14. The apparatus in claim 12. wherein the angulated position of the handle portion provides for use of the apparatus while the user is seated and the patient is

essentially supine in a dental chair.

15. The apparatus in claim 12, wherein the apparatus would be formed of molded plastic or stainless steel so as to be sterilizable for use in the mouth.

16. The apparatus in claim 12, wherein the handle portion further comprises a thin waist portion terminating in a broader end portion of the handle, for allowing use of the apparatus yet preventing the hand grasping the handle from slipping off of the handle during use.

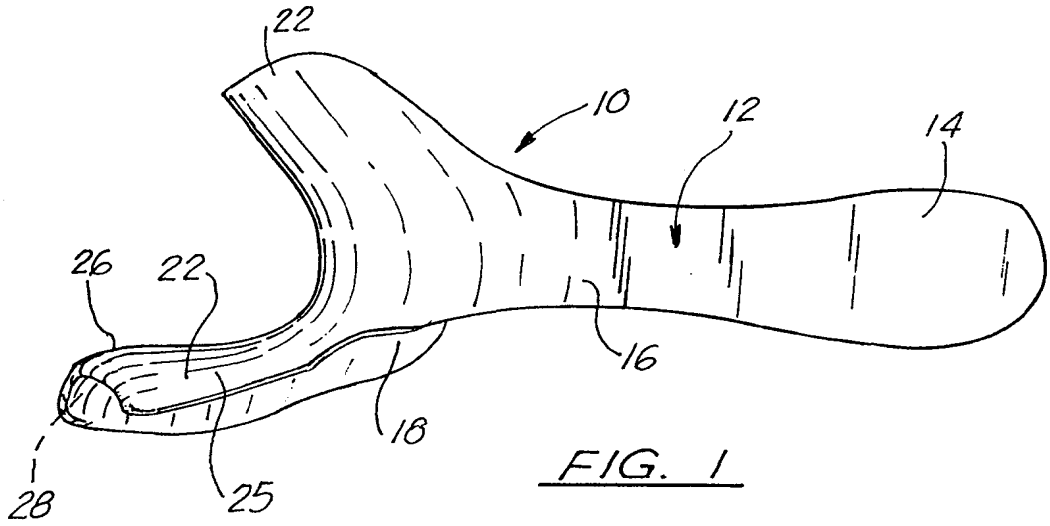

FIG. 1

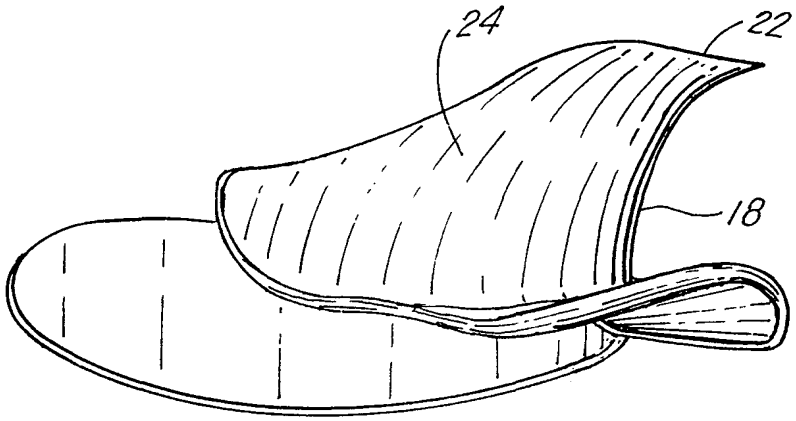

FIG. 2

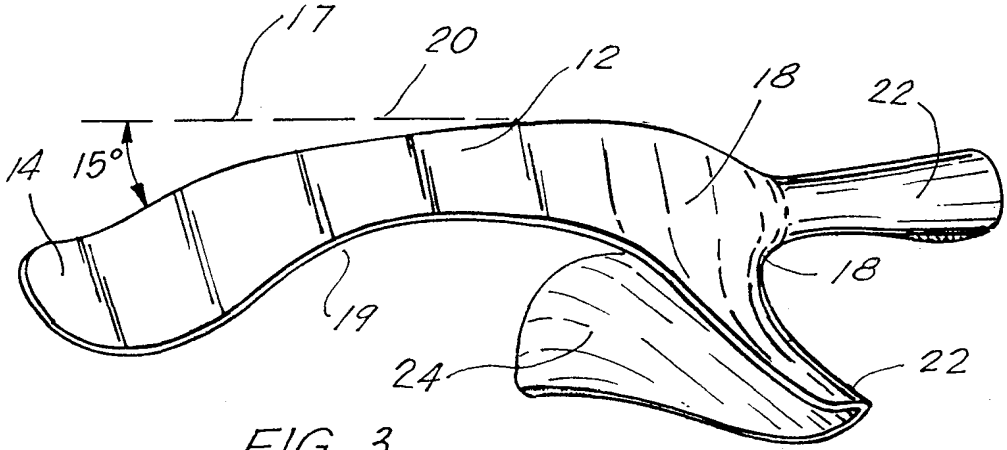

FIG. 3

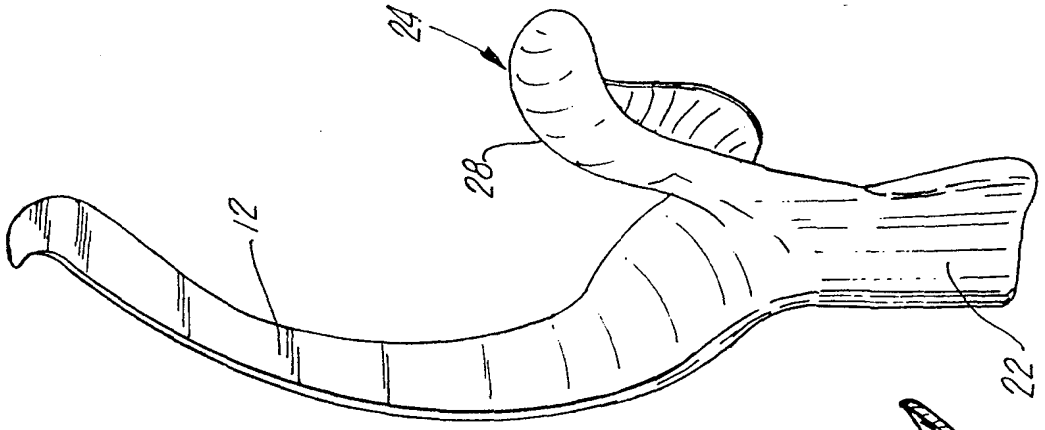

FIG. 8

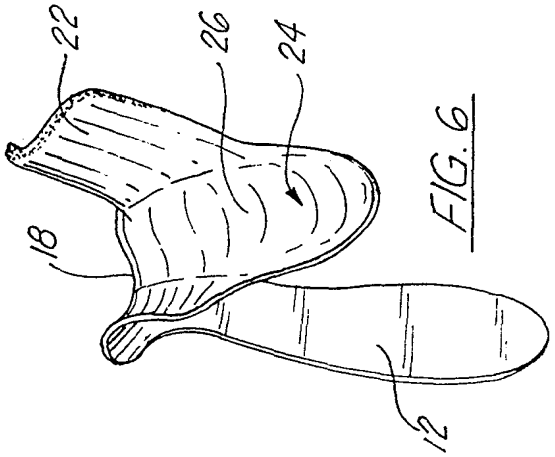

FIG. 6

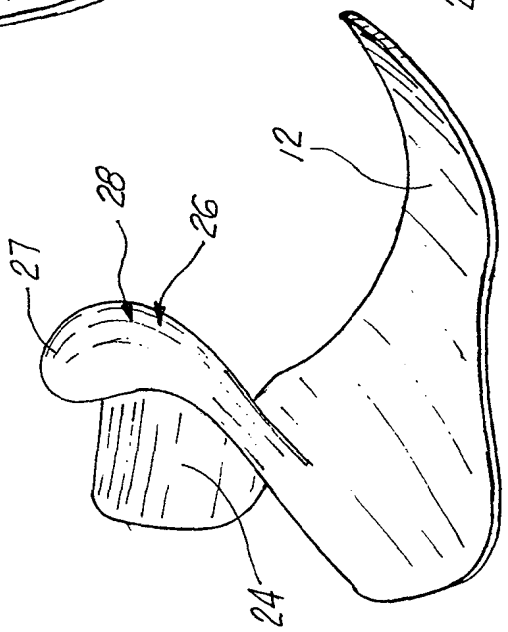

FIG. 7

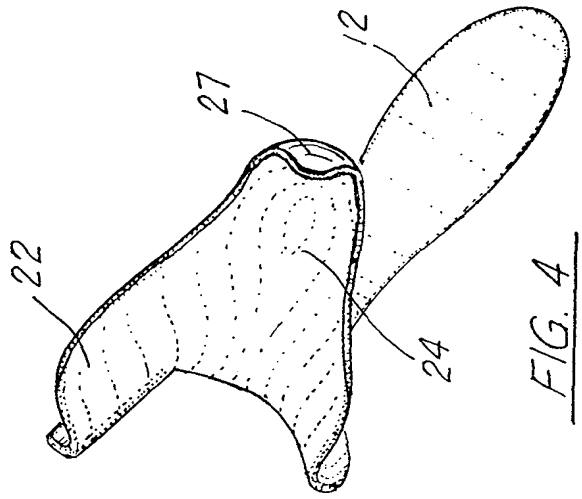

FIG. 4

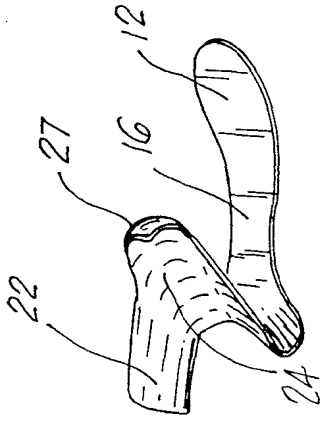

FIG. 5

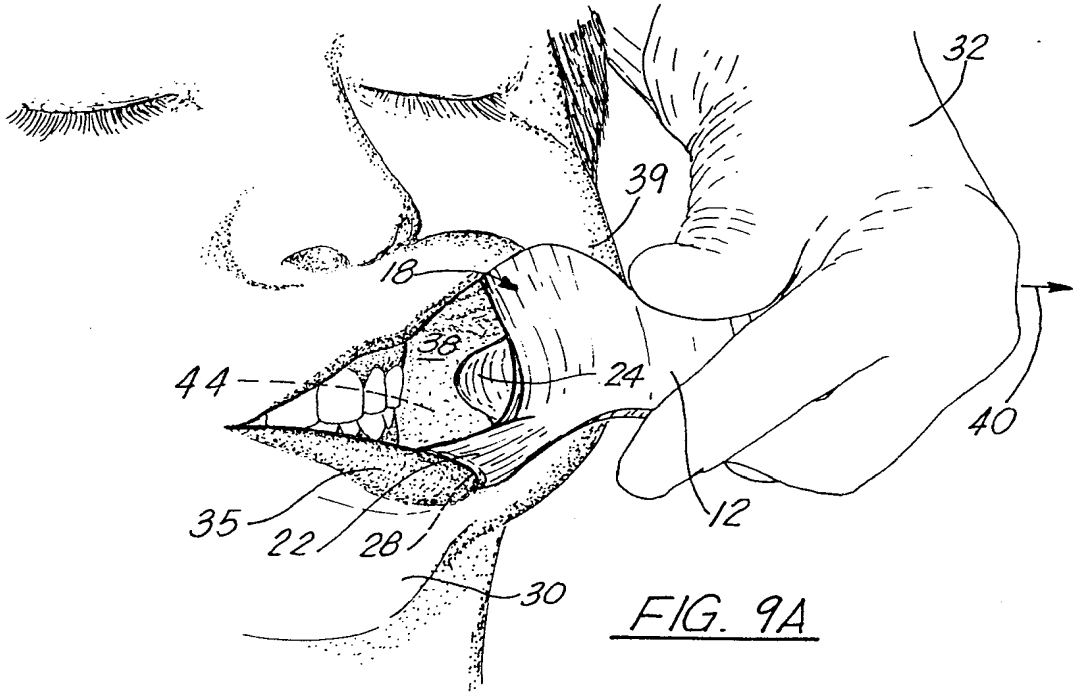

FIG. 9A

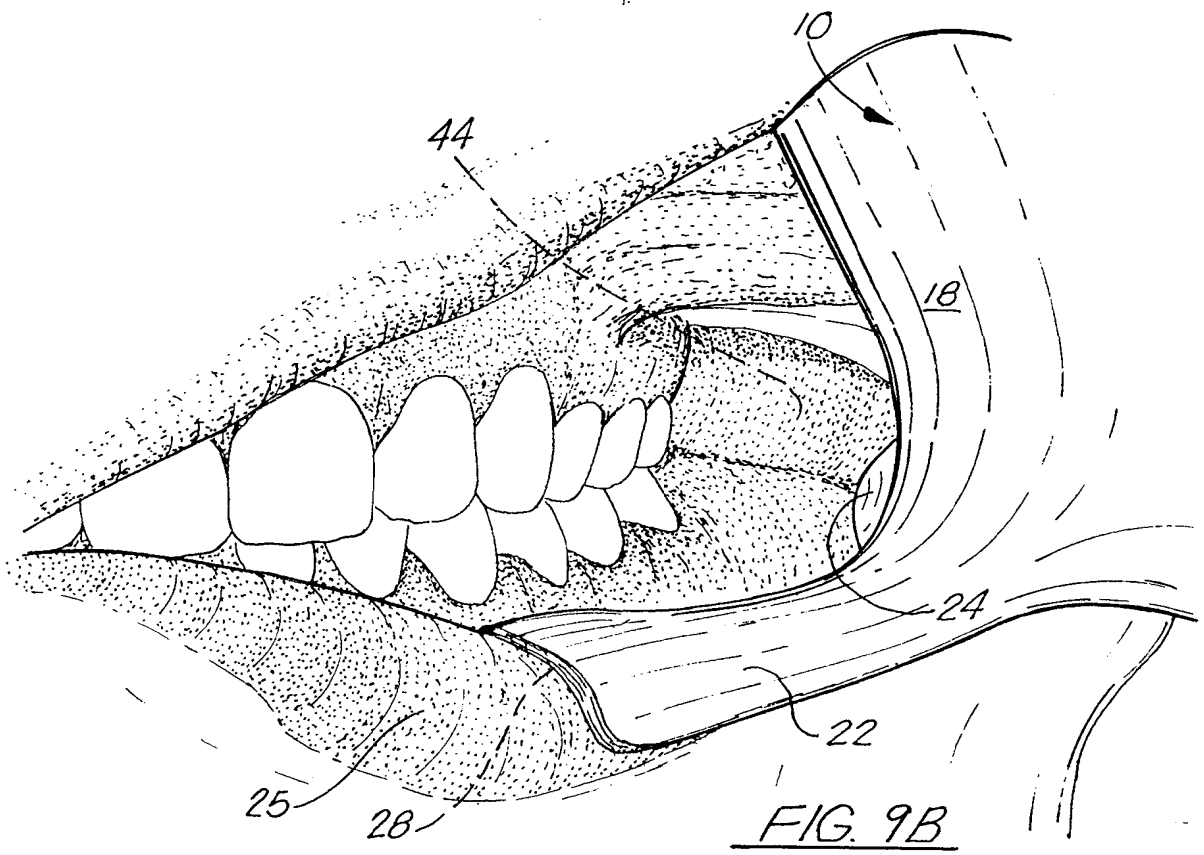

FIG. 9B

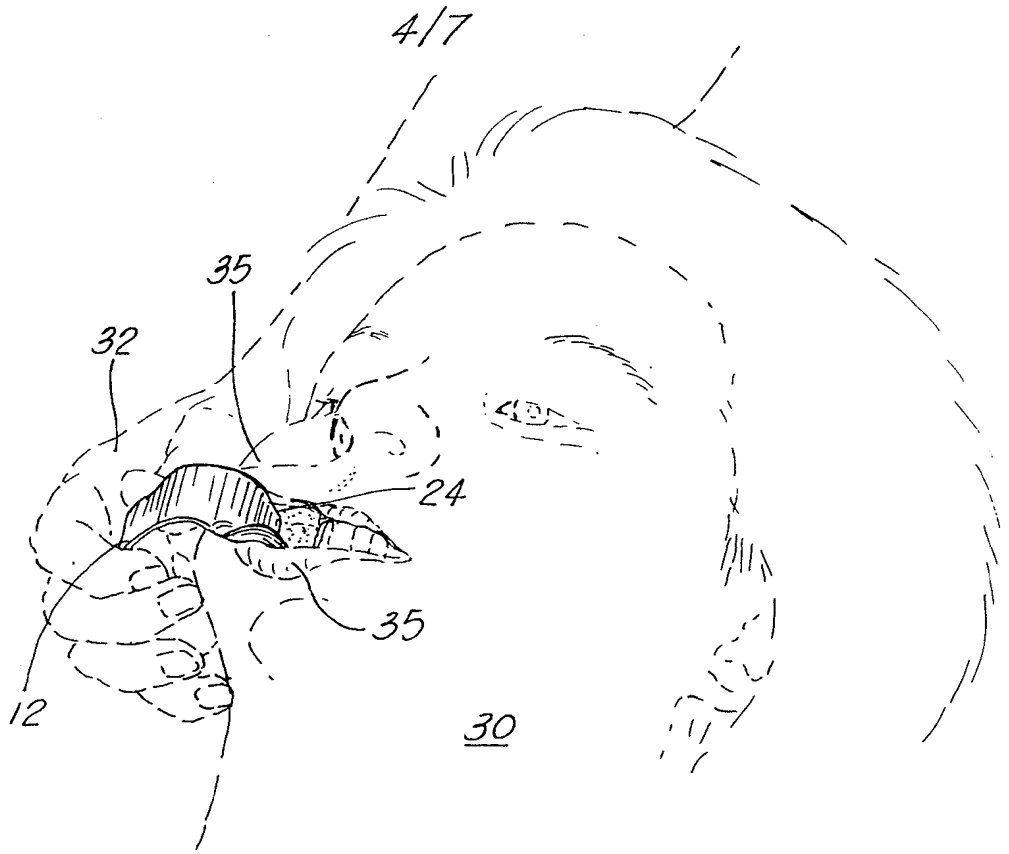

FIG. 10

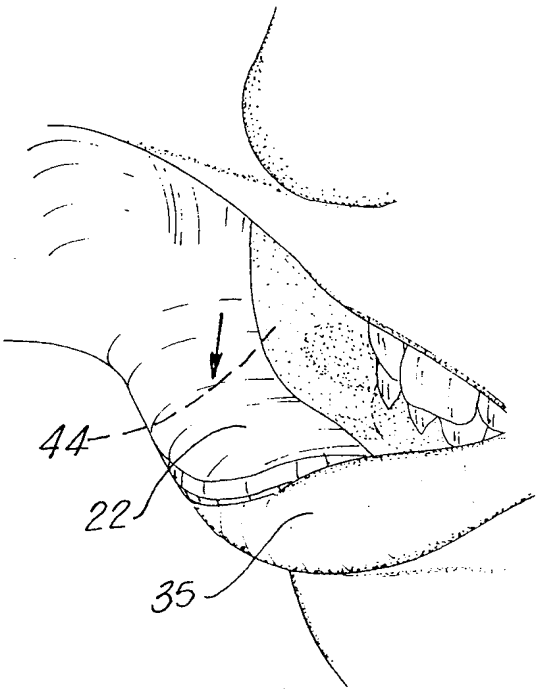

FIG. 11A

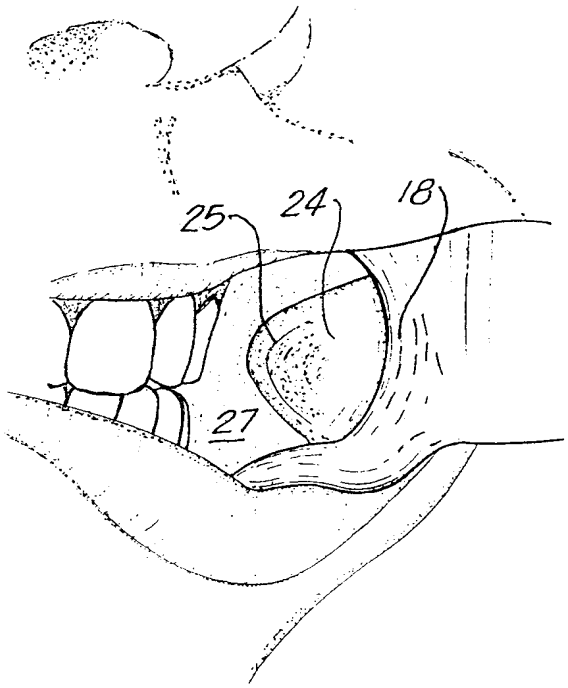

FIG. 11B

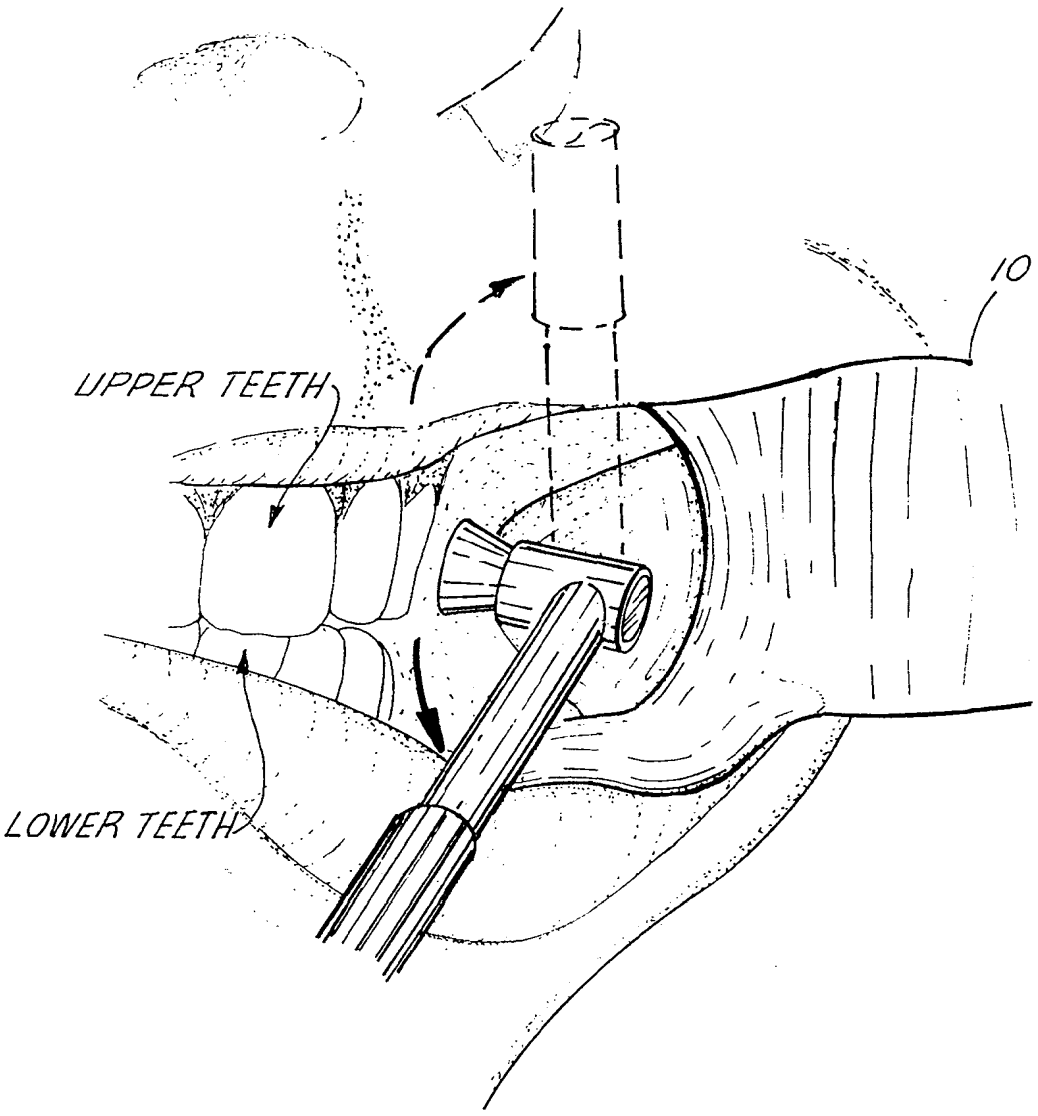

FIG. 12B

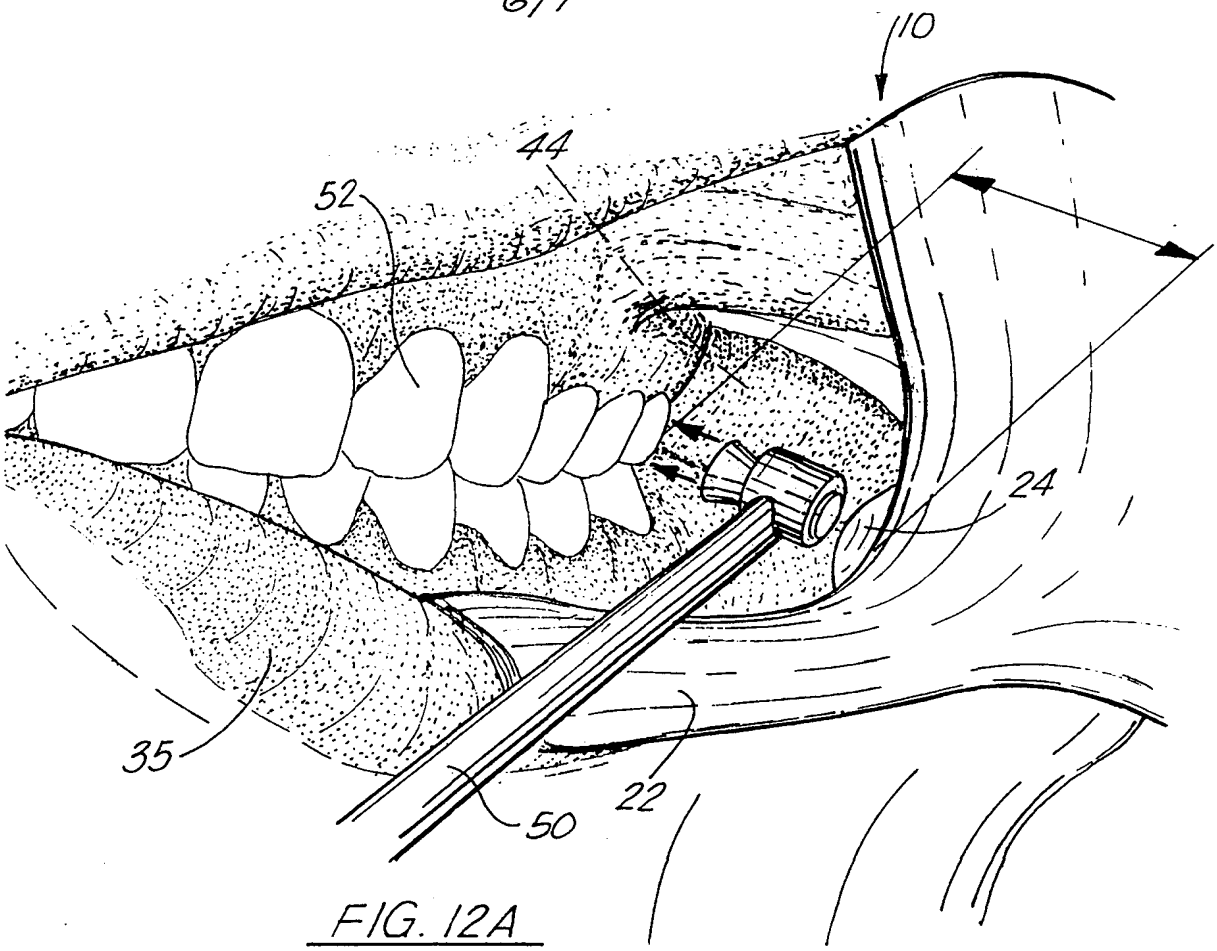

FIG. 12A

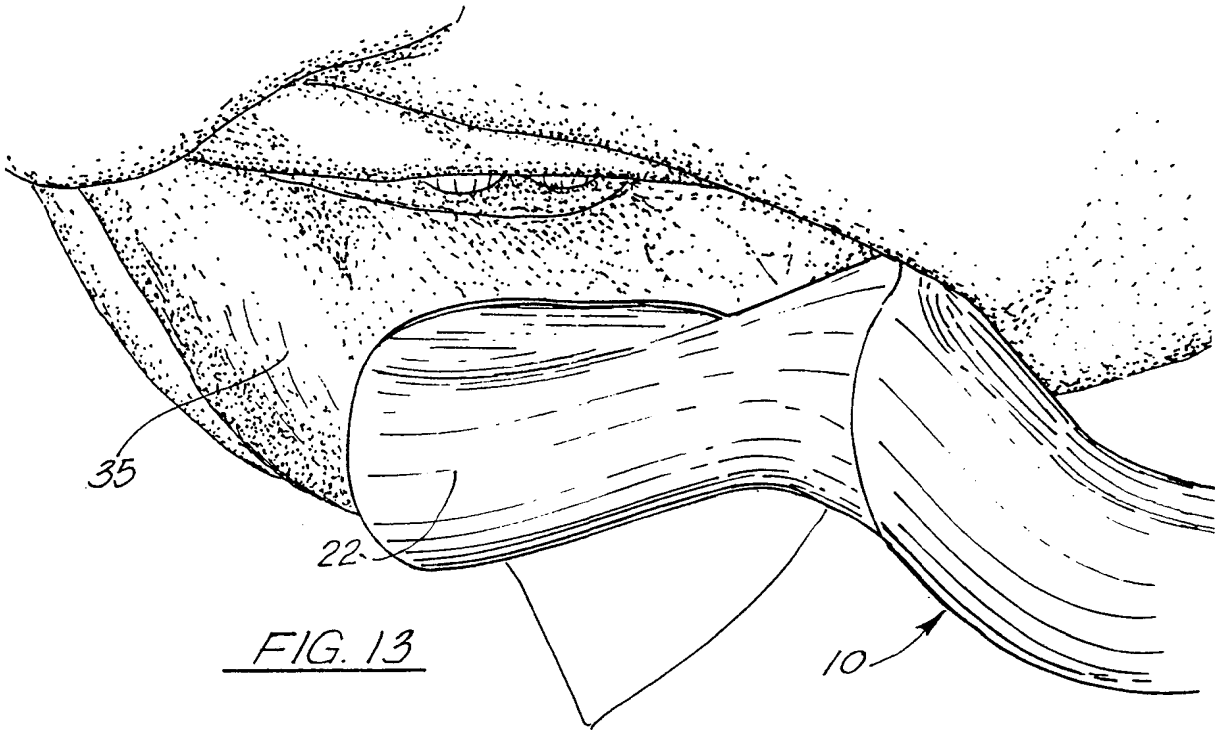

FIG. 13

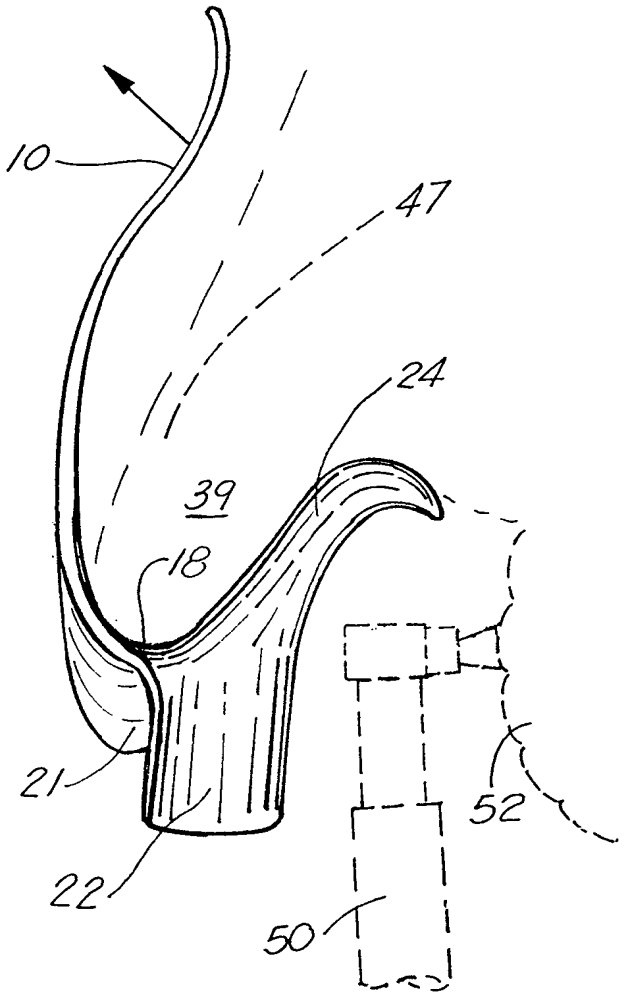

FIG. 14

INTERNATIONAL SEARCH REPORT

:rnational application No.
PCT/US00/01577

A. CLASSIFICATION OF SUBJECT MATTER

IPC(7) :A61C 5/00
US CL :433/140; 600/237
According to International Patent Classification (IPC) or to both national classification and IPC

B. FIELDS SEARCHED

Minimum documentation searched (classification system followed by classification symbols)

U.S. : 433/140; 600/237, 238, 242

Documentation searched other than minimum documentation to the extent that such documents are included in the fields searched

Electronic data base consulted during the international search (name of data base and, where practicable, search terms used)

C. DOCUMENTS CONSIDERED TO BE RELEVANT

Category*	Citation of document, with indication, where appropriate, of the relevant passages	Relevant to claim No.
A	US 5,730,597 A (LUTTRELL) 24 March 1998, entire document.	1-16

☐ Further documents are listed in the continuation of Box C. ☐ See patent family annex.

*	Special categories of cited documents:	"T"	later document published after the international filing date or priority date and not in conflict with the application but cited to understand the principle or theory underlying the invention
"A"	document defining the general state of the art which is not considered to be of particular relevance	"X"	document of particular relevance; the claimed invention cannot be considered novel or cannot be considered to involve an inventive step when the document is taken alone
"E"	earlier document published on or after the international filing date	"Y"	document of particular relevance; the claimed invention cannot be considered to involve an inventive step when the document is combined with one or more other such documents, such combination being obvious to a person skilled in the art
"L"	document which may throw doubts on priority claim(s) or which is cited to establish the publication date of another citation or other special reason (as specified)	"&"	document member of the same patent family
"O"	document referring to an oral disclosure, use, exhibition or other means		
"P"	document published prior to the international filing date but later than the priority date claimed		

Date of the actual completion of the international search 21 APRIL 2000	Date of mailing of the international search report 03 MAY 2000
Name and mailing address of the ISA/US Commissioner of Patents and Trademarks Box PCT Washington, D.C. 20231 Facsimile No. (703) 305-3230	Authorized officer NICK LUCCHESI Telephone No. (703) 308-2698

Form PCT/ISA/210 (second sheet) (July 1998)★

(12) INTERNATIONAL APPLICATION PUBLISHED UNDER THE PATENT COOPERATION TREATY (PCT)

(19) World Intellectual Property Organization
International Bureau

(43) International Publication Date
05 July 2018 (05.07.2018)

WIPO | PCT

(10) International Publication Number
WO 2018/126150 A1

(51) International Patent Classification:
A61C 5/82 (2017.01) *A61C 5/90* (2017.01)
A61C 5/85 (2017.01)

(21) International Application Number:
PCT/US2017/068979

(22) International Filing Date:
29 December 2017 (29.12.2017)

(25) Filing Language: English

(26) Publication Language: English

(30) Priority Data:
62/440,189 29 December 2016 (29.12.2016) US

(71) Applicant: **NOVO DENT, LLC** [US/US]; 5435 Carmel Knolls Drive, San Diego, California 92130 (US).

(72) Inventors: **JACOBSON SHAGAN, Sigal**; 5435 Carmel Knolls Drive, San Diego, California 92130 (US). **URRUTIA FABIAN, Pedro**; 7 Ave 14-44 Zona 9 # 8, Guatemala City, 01009 (GT).

(74) Agent: **BAKER, Gregory C.** et al.; 230 South 500 East, Suite 300, Salt Lake City, Utah 84102 (US).

(81) Designated States *(unless otherwise indicated, for every kind of national protection available)*: AE, AG, AL, AM, AO, AT, AU, AZ, BA, BB, BG, BH, BN, BR, BW, BY, BZ, CA, CH, CL, CN, CO, CR, CU, CZ, DE, DJ, DK, DM, DO, DZ, EC, EE, EG, ES, FI, GB, GD, GE, GH, GM, GT, HN, HR, HU, ID, IL, IN, IR, IS, JO, JP, KE, KG, KH, KN, KP, KR, KW, KZ, LA, LC, LK, LR, LS, LU, LY, MA, MD, ME, MG, MK, MN, MW, MX, MY, MZ, NA, NG, NI, NO, NZ, OM, PA, PE, PG, PH, PL, PT, QA, RO, RS, RU, RW, SA, SC, SD, SE, SG, SK, SL, SM, ST, SV, SY, TH, TJ, TM, TN, TR, TT, TZ, UA, UG, US, UZ, VC, VN, ZA, ZM, ZW.

(84) Designated States *(unless otherwise indicated, for every kind of regional protection available)*: ARIPO (BW, GH, GM, KE, LR, LS, MW, MZ, NA, RW, SD, SL, ST, SZ, TZ, UG, ZM, ZW), Eurasian (AM, AZ, BY, KG, KZ, RU, TJ, TM), European (AL, AT, BE, BG, CH, CY, CZ, DE, DK, EE, ES, FI, FR, GB, GR, HR, HU, IE, IS, IT, LT, LU, LV, MC, MK, MT, NL, NO, PL, PT, RO, RS, SE, SI, SK, SM, TR), OAPI (BF, BJ, CF, CG, CI, CM, GA, GN, GQ, GW, KM, ML, MR, NE, SN, TD, TG).

(54) **Title:** POLYMER DENTAL DAM CLAMP AND RELATED ASSEMBLIES AND METHODS

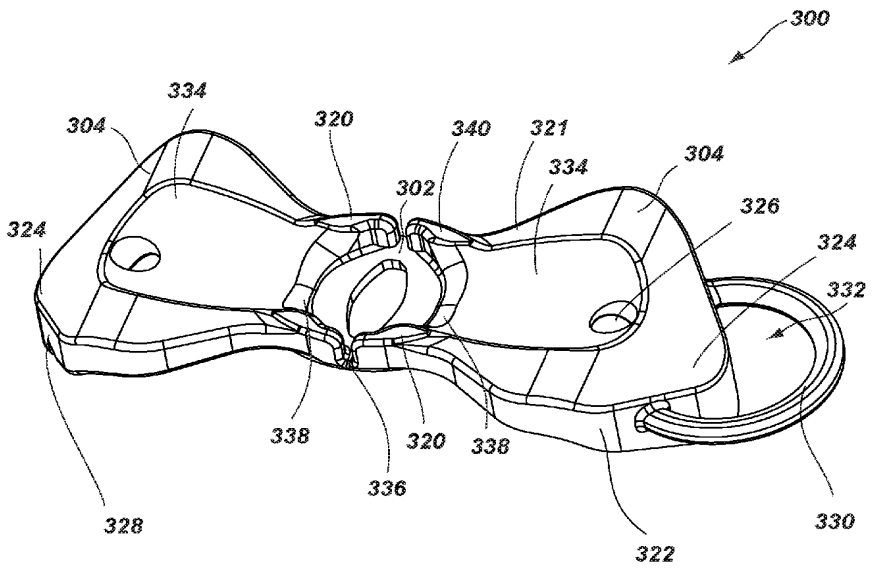

FIG. 7

(57) **Abstract:** A device for retaining a dental dam includes a flexible clamp including a central portion for receiving at least one tooth of a subject. Dental dam assemblies and methods for forming and using the clamps in dental dam assemblies are also disclosed.

WO 2018/126150 A1

[Continued on next page]

Declarations under Rule 4.17:

— *as to applicant's entitlement to apply for and be granted a patent (Rule 4.17(ii))*

— *as to the applicant's entitlement to claim the priority of the earlier application (Rule 4.17(iii))*

Published:

— *with international search report (Art. 21(3))*

POLYMER DENTAL DAM CLAMP AND RELATED ASSEMBLIES AND METHODS

PRIORITY CLAIM

This application claims the benefit of the filing date of United States Provisional Patent Application Serial No. 62/440,189, filed December 29, 2016, for "POLYMER DENTAL DAM CLAMP AND RELATED ASSEMBLIES AND METHODS," the disclosure of which is hereby incorporated herein in its entirety by this reference.

TECHNICAL FIELD

The disclosure relates generally to the field of dental devices and related assemblies and methods. In particular, the disclosure relates to a flexible retaining device that couples with a portion of a subject's mouth (*e.g.*, teeth), such as a polymer dental clamp, for retaining a dental dam, and related assemblies and methods.

BACKGROUND

Dental dams are employed in many dental procedures. The rubber dental dam is known in the art and has been utilized in dentistry since 1864. It comprises a thin, flexible piece of rubber employed to isolate one or more teeth during various dental procedures. The purpose for using the rubber dental dam is to provide an optimum working environment for the dentist while protecting the patient during operative procedures.

The dam minimizes or eliminates saliva from the field of operation and may mildly retract the soft tissue around the tooth. Most procedures in operative dentistry are performed more efficiently by employing a dental dam, as it assures a dry working area during all steps of the procedure. Another advantage to operating in a dry field is that dental restorative materials do not develop their full properties in a wet operating environment. The rubber dam then permits a dentist to obtain the expected physical properties of materials because of the dry field.

The dental dam also protects the patient and the practitioner. The rubber dental dam protects the patient from the possibility of aspirating or swallowing debris. In addition, the dam will permit prompt recovery of any instruments dropped during the operative procedure. The dental dam also affords the practitioner protection from any infectious disease that may be present in the subject's mouth.

To employ a dental dam, the dam may first be placed around and attached to a YOUNG™ holder, which is a frame for the dental dam. Holes are subsequently punched in the dam such that each hole corresponds to a tooth for placement thereover. The dental dam is then lubricated to facilitate the passing of the dam through the tooth/crown contact points. Alternatively, the holes may be punched first, the dam is installed over the teeth and is then stretched over the frame. In either order, the dental dam then must be stabilized using a retainer.

A metal retainer clamp is the most common form of stabilizing a dental dam and consists of four prongs and two jaws connected by a bow. The problem with utilizing the metal retainer clamp is that the clamp is not ideally configured for a specific tooth. Due to the variation in teeth across a single mouth, from sharp, thin incisors to broad, wide molars, many types of teeth are encountered. Further, every mouth has different sizes and shapes of teeth. As a result, with specific clamps designed for specific teeth, many types of clamps need to be stocked by the practitioner.

Another disadvantage in employing the metal retainer clamp is that the four prongs must contact a tooth, if they do not, the clamp may need to be modified, a process requiring still more time. Furthermore, even with four-point contact, the retainer can injure the gingiva (*i.e.*, gums), as well as the tooth, resulting in post-operative soreness. Accurate placement of the clamps is difficult to achieve and, as a result, the patient may need to be anesthetized allowing for more comfortable retainer placement on the anchor tooth. The clamp may also create sealing problems on the anchor tooth, which then creates leakage problems of wetness into the work area. Further disadvantages include reprocessing costs associated with utilizing the metal retainer clamps in multiple proceeds, such as the required sterilization of the clamps along with reprocessing and sterilization of any dental tools, such as dental clamp forceps, that are utilized to place the metal retainer clamps (*e.g.*, dental clamp forceps).

Alternatively, practitioners have used elastomeric cords for retaining dental dams. One such cord is disclosed in U.S. Patent 5,104,317, the disclosure of which is hereby incorporated herein in its entirety by this reference. To retain a dental dam with an elastomeric cord, the dental dam is first placed over the subject's teeth as described above. Next, the practitioner elongates a section of elastomeric cord thereby reducing the cross-sectional area of one section of the cord. The practitioner then interposes a portion of the elongated section between at least two adjacent teeth and over the dam. Once the cord is

positioned, the practitioner allows the cord to expand to its original cross-sectional area, thereby prohibiting the removal of the dam from the teeth.

Although the elastomeric cords have proven useful once they are positioned, problems have arisen when the practitioner is installing and removing the elastomeric cords. One problem has been that the elastomeric cords have been difficult to pick up and grip easily. The difficulty in gripping leads to difficulty when the practitioner must elongate the cord. Another problem is that the installation and removal of the cords requires at least two hands. In view of the limiting working area, the two-handed operation is a disadvantage. Furthermore, because teeth tend to have rounded corners, the elastomeric cord only provides a small wedge where the space between the adjacent teeth is the narrowest.

DISCLOSURE

Described are clamping devices for use in dental procedures. For example, such clamping devices may be utilized for retaining a dental device, such as a flexible clamp (*e.g.*, a polymer clamp) for retaining one or more portions of a dental dam. The flexible clamps may be provided in multiple sizes in order to be utilized on different sizes (*e.g.*, adult, child, *etc.*) and types of teeth (*e.g.*, molars, anterior teeth, *etc.*).

In some embodiments, the device for retaining a dental dam may comprise a flexible clamp circumscribing a central aperture for receiving at least one tooth of a subject in the central aperture.

In some embodiments, the clamp may include a central portion including one or more thin bands and/or one or more bands (*e.g.*, reinforced bands) defining a central aperture. The clamp may also include one or more wings attached to the central portion proximate the one or more reinforced bands, where one or more of the one or more reinforced bands or the one or more wings are configured to provide a surface for retaining the dental dam.

In some embodiments, the clamp may include a raised portion extending linearly across a midsection of the one or more wings transverse to a longitudinal axis of the clamp. The clamp may also include a gripping portion located on the one or more wings between the raised portion of the one or more wings and the central portion of the clamp.

In some embodiments, the flexible clamp (*e.g.*, polymer clamp) may optionally include one or more reinforcement structures (wires, springs, ribbons, combinations thereof, *etc.*) that are utilized to reinforce the structure of the flexible clamp.

Also disclosed is a dental dam assembly including a dental dam and a clamp. The clamp may comprise a polymer material ad may be configured to retain the dental dam. In some embodiments, the clamp may include a central portion including one or more thin bands and/or one or more bands defining a central aperture. The clamp may also include one or more wings attached to the central portion proximate the one or more bands, the one or more wings configured to provide a surface to retain the dental dam relative to a tooth.

In some embodiments, the dental dam assembly may include a dental dam and a flexible clamp circumscribing a central aperture and for receiving at least one tooth of a subject in the central aperture to retain the dental dam relative to the at least one tooth.

In some embodiments, the disclosed dental clamps may be utilized with other dental devices and/or procedures. For example, a dental clamp itself, or in conjunction with other devices, may be utilized as dental matrices in a restoration process.

In some embodiments, a dental clamp may include a feature and/or mechanism that interacts with an adjacent structure (*e.g.,* another portion of the clamp) to secure one or more of the wings in a displaced position. The displaced position may enhance the ability of the user to thread a portion of the clamp (*e.g.,* one or more wings) through an aperture in a dental dam. Such a displaced position may be an upward position extending in a direction transverse (*e.g.,* perpendicular) to a major axis of the clamp (*e.g.,* where one or both wings extend from and substantially over the central portion).

In some embodiments, methods of retaining a dental dam include grasping at least one wing of a clamp; applying tension along an axis of the clamp to elongate at least one band proximate an aperture of a central portion of the clamp; centering the aperture of the central portion over an exposed tooth; securing a portion of the at least one band in an intermediate space between adjacent teeth by applying pressure to position the at least one band proximate the gingiva; releasing the applied tension to enable the at least one band to at least partially surround the exposed tooth; and retaining the dental dam proximate the exposed tooth with the at least one wing.

Further disclosed are methods for retaining a dental dam with the clamp and methods of forming the dental dam clamp according to the disclosure.

BRIEF DESCRIPTION OF THE DRAWINGS

FIG. 1 depicts a top view of a clamp for retaining a dental dam in accordance with an embodiment of the disclosure.

FIG. 2 depicts a front plan view of the clamp of FIG. 1.

FIG. 3 depicts an end view of the clamp of FIG. 1.

FIG. 4 depicts a top view of the clamp in use in a dental dam assembly in accordance with an embodiment of the disclosure.

FIG. 5 depicts an isometric view of a clamp for retaining a dental dam in accordance with an embodiment of the disclosure.

FIG. 6 depicts a front plan view of the clamp of FIG. 5.

FIG. 7 depicts an isometric view of a clamp for retaining a dental dam in accordance with an embodiment of the disclosure.

FIG. 8 depicts another isometric view of the clamp of FIG. 5.

MODE(S) FOR CARRYING OUT THE INVENTION

Illustrations presented herein are not necessarily meant to be actual views of any particular device, assembly, system, method, or components thereof, but are merely idealized representations, which are employed to describe embodiments of the disclosure. Additionally, elements common between figures may retain the same numerical designation.

As used herein, the term "substantially," in reference to a given parameter, means and includes to a degree that one skilled in the art would understand that the given parameter, property, or condition is met with a small degree of variance, such as within acceptable manufacturing tolerances. For example, a parameter that is substantially met may be at least about 90% met, at least about 95% met, or even at least about 99% met.

FIG. 1 depicts a top view of a clamp for use in a dental procedure, such as, for example, an at least partially flexible clamp 100 for retaining a dental dam. In some embodiments, the clamp 100 may at least partially or entirely comprise a polymer (*e.g.*, rubbers, elastomers, silicon elastomers or rubbers, thermoplastic elastomers, plastics, combinations thereof *etc.*) dental dam clamp for retaining a dental dam (*e.g.*, rubber dental dam) during a dental procedure. In some embodiments, the clamp 100 may be utilized to assist in temporarily retaining the dental dam in a desired position in order to isolate one or more teeth during a dental procedure. The clamp 100 comprises a central portion 102 (*e.g.*,

a substantially elliptical, circular, or oval-shaped structure), which may comprise one or more thin bands 118 (*e.g.*, bands having a relatively smaller thickness taken in a radial or lateral direction) and one or more thicker or reinforced bands 120 (*e.g.*, bands having a relatively larger thickness taken in a radial or lateral direction). For example, two opposing thin bands 118 and two opposing reinforced bands 120 may define a circumference of the substantially circular or oval-shaped structure of the central portion 102. In some embodiments, the thin bands 118 and/or reinforced bands 120 may be one continuous structure extending about (*e.g.*, surrounding) a central aperture 108 with relatively narrower and thicker portions as depicted in FIG. 1.

In some embodiments, the central portion 102 of the clamp 100 may include a cover portion (not shown) extending over the central aperture 108. Such a cover portion may act to cover (*e.g.*, shield, isolate) an upper portion of the subject's tooth or teeth that is received in the central aperture 108.

In some embodiments, the clamp 100, including the thin bands 118 and the reinforced bands 120 of the central portion 102, may be one continuous structure of a single material (*e.g.*, polymer material). In other embodiments, the clamp 100 may be formed of different sections or materials that have been affixed (*e.g.*, using an adhesive, *etc.*) to one another in order to form the clamp 100.

In some embodiments, one or more portions of the clamp 100 may comprise a material that is at least partially transparent in an imaging process. For example, one or more portions of the clamp 100 may comprise a radiolucent material that is at least partially transparent (*e.g.*, substantially entirely transparent) in images (*e.g.*, and/or will not interfere with other structures being imaged) taken by devices, such as, for example, cone beam computed tomography (CBCT) devices, X-rays devices, *etc.*

In some embodiments, the clamp 100 may include metal portions (*e.g.*, wire, spring, *etc.*) configured to provide additional support to the polymer material in high strain areas of the clamp 100, for example, in the reinforced bands 120. In other embodiments, each portion of the clamp 100 may be constructed exclusively of non-metallic materials (*e.g.*, rubber, plastic, silicone, polyimide, *etc.*). In addition, an increased thickness and/or strength of material in the reinforced bands 120 enables a relatively higher tensile strength relative to the thin bands 118, while still retaining an at least partial ability to stretch (*e.g.*, elastically deform) around a subject's tooth or teeth. Such an effect enables the clamp 100 to maintain integrity without significantly tearing or damaging the clamp 100 while

allowing the thin bands 118 to stretch (*e.g.*, elastically deform), thus minimizing a cross-sectional area of the thin bands 118 to enable placement thereof between adjoining teeth. In some embodiments, the clamp 100 may include a single body (*e.g.*, a molded article) consisting essentially of the polymer material. In some embodiments, the clamp 100 may comprise a latex-free material, such as, for example, a radiopaque silicone medical grade material. Additional fillers may also be present in the polymer material. The clamp 100 may not be rigid and may be at least partially moldable, depending on the modulus of elasticity (*i.e.*, stiffness) of the material. The thin bands 118 and/or the reinforced bands 120 may include a band of silicone or elastomer. Selection of specific materials may depend on desired physical properties including, for example, modulus of elasticity, compressive strength, and/or flexural strength. It may be appreciated that any suitable material may be used based on individual requirements.

While FIG. 1 depicts the clamp 100 including the central portion 102 having a generally oval shape with two opposing thin bands 118 (shown at the at top and bottom sides of the central portion 102) and with two opposing reinforced bands 120 (shown at the left and right sides of the central portion 102), in other embodiments, the central portion 102 may be formed as any suitable size and shape, such as, for example, a C-shape or an arc-shape. By way of non-limiting example, a single reinforced band 120 may extend around a majority of the central portion 102, while a single thin band 118 may extend around a minor section of the central portion 102, thereby providing a C-shape.

The central portion 102 of the clamp 100 may comprise the central aperture 108 defined by inner portions of the thin bands 118 and the reinforced bands 120. The central aperture 108 may be symmetric with respect to a longitudinal axis L of the clamp 100 and may be symmetric with respect to an axis transverse to the longitudinal axis L. However, the central aperture 108 may, or may not, be circular or oval in shape. Rather, the central aperture 108 may have a non-uniform shape defined by the proximate locations and thicknesses of the surrounding thin bands 118 and the reinforced bands 120. For example, as shown in the embodiment of FIG. 1, the thin bands 118 have a relatively smaller cross-sectional area than the cross-sectional area of the reinforced bands 120. The cross-sectional area of the thin bands 118 may approximate a cross-sectional area of dental floss. In addition, each of the thin bands 118 and the reinforced bands 120 may have a similar height to one another in a third direction (*i.e.*, out of the page, *see, e.g.*, FIG. 2) providing a coextensive surface with respect to one another. In other embodiments, the relative heights

of the thin bands 118 and the reinforced bands 120 may be different and may not provide a coextensive surface.

The central portion 102 may include a web portion 106 (*e.g.*, an inner or innermost band) within at least a portion of an interior area of the central aperture 108. The web portion 106 may have a decreased thickness taken in a direction transverse to the longitudinal axis L (*e.g.*, as compared to one or more adjacent portions of the clamp 100, such as, the bands 118, 120) and may easily conform (*e.g.*, elastically deform) around a subject tooth. The central aperture 108 may include an elongated shape (*e.g.*, a slot) having an enlarged central portion 112 and two relatively narrow side portions 114 as defined by the web portion 106. In some embodiments, the enlarged central portion 112 may be concave along a centerline of the central aperture 108. As depicted in FIG. 1, the web portion 106 may extend from and/or be recessed within the inner portions of the thin bands 118 and the reinforced bands 120. In addition, the web portion 106 may be recessed from the upper surface of the central portion 102 (*e.g.*, recessed into the page from the perspective of FIG. 1). In some embodiments, sections of the web portion 106 proximate the thin bands 118 may be relatively narrower than sections of the web portion 106 proximate the reinforced bands 120. The web portion 106 may include a thin, flexible portion of the polymer material of the clamp 100. As depicted, the central aperture 108 may be configured to receive a tooth therethrough, while the web portion 106 hugs the tooth (*e.g.*, restricts around the tooth), providing additional surface area of polymer material to surround the tooth.

The clamp 100 may also comprise one or more wings 104 (*e.g.*, two opposing wings) attached to and generally extending away from the central portion 102 (*e.g.*, in a direction along the longitudinal axis L). The wings 104 may be located proximate the one or more reinforced bands 120. The wings 104 (*e.g.*, handles) may be polygonal in shape where the outer edges of the wings 104 may flare outward and then back inward meeting, for example, at a point. In some embodiments, the wings 104 may be one continuous structure of a single material (*e.g.*, polymer material) with the clamp 100 and the central portion 102, including the thin bands 118 and the reinforced bands 120. In other embodiments, the wings 104 may be formed of different sections or materials and affixed (*e.g.*, using an adhesive, *etc.*) to the central portion 102 of the clamp 100. In addition, the wings 104 may have a similar height with respect to the central portion 102 in the third direction (*i.e.*, out of the page) providing a coextensive surface with respect to the central

portion 102. In other embodiments, the relative height of the wings 104 may not provide a coextensive surface with respect to the central portion 102, as shown in the embodiment of FIG. 2.

As depicted in FIG. 1, the wings 104 may be sized and shaped to be substantially symmetrical with respect to the central portion 102 or, in other embodiments, the wings 104 may be sized and shaped to be asymmetrical. Each of the wings 104 may include a raised portion 122 extending linearly (*e.g.*, transverse the longitudinal axis L) across a midsection thereof. The raised portion 122 may be located near an enlarged midsection of the wings 104, as depicted in FIG. 1. In some embodiments, the raised portion 122 may be formed to include an additional thickness relative to a thickness of the wings 104. In other embodiments, the raised portion 122 may be of a similar thickness as the wings 104, but may include an area having a heightened feature (*e.g.*, joint, bend, *etc.*) effectively providing an angle relative to a major plane of the wings 104, as shown in FIG. 2. Forming such an angle in the wings 104 may facilitate placement of the clamp 100 and retention of an associated device (*e.g.*, a dental dam).

The wings 104 may also include a gripping portion 124 located approximately between the raised portion 122 of the wings 104 and the central portion 102 of the clamp 100. The gripping portion 124 may provide an additional contour providing strength to the wings 104, along with providing increased grip strength while applying outward tension (*i.e.*, stretching) during application of the clamp 100. In some embodiments, the gripping portion 124 may be configured to express a logo or other such pattern unique to the clamp 100. For example, the gripping portion 124 as depicted in FIG. 1 corresponds to a product name (*i.e.*, "NC" representing the product name "Novoclamp"). Additional shapes and configurations of the wings 104 are contemplated. While the wings 104 are depicted as being two opposing wings 104 located proximate two reinforced bands 120, the wings 104 may also include one or more non-opposing wings for other embodiments of the central portion 102 (*e.g.*, C-shaped or arc-shaped configurations). However, it is to be appreciated that having two opposing wings 104 facilitates stretching of the clamp 100 during application. The wings 104 may also include one or more holes 126 in an outer end thereof remote from the central portion 102. In some embodiments, the one or more holes 126 may be utilized to retrieve and/or remove the clamp 100. For example, another dental device (*e.g.*, floss) may be passed through the one or more holes 126 in order to secure and/or retrieve the clamp 100 in the event it may become dislodged or removed from the

subject's tooth. In some embodiments, the one or more holes 126 may be located and configured to enable retention of a dental instrument in order to facilitate stretching the wings 104 and to ensure accurate placement of the clamp 100.

In some embodiments, a length (*e.g.*, along the longitudinal axis L) of the clamp 100, including the central portion 102 and the wings 104, may be between about 4 mm and about 10 mm. In some embodiments, the length of the clamp 100 may be between about 5 mm and about 6 mm. In addition, a width (*i.e.*, transverse to the longitudinal axis L) of the clamp 100, may be between about 4 mm and about 10 mm. In some embodiments, the width of the clamp 100 may be between about 8 mm and about 10 mm.

FIG. 2 depicts a front plan view of the clamp 100 of FIG. 1 as viewed from a side surface thereof. As shown in FIG. 2, the clamp 100 may include a non-planar aspect with regard to the major surface of the clamp 100. As depicted, the wings 104 are configured to extend away from the central portion 102. In some embodiments, the wings 104 may be configured to be flush with and provide a coextensive surface with respect to the central portion 102. In other embodiments, the raised portion 122 may extend along a midsection of the wings 104. In other words, portions of the midsection of the wings 104 may slightly flair upward with respect to the major plane of the wings 104. In other embodiments, the raised portion 122 may include an additional thickness of material, as discussed above. In addition, the thickness of a sidewall 128 of the wings 104 may be the same as, or different than, the thickness of the central portion 102. For example, the thickness of the wings 104 may be greater than, or in some embodiments, less than, the thickness of the central portion 102 depending on strength of material requirements in specific locations. It is to be understood that any shape or size of wings 104 may be contemplated.

FIG. 3 depicts an end view of the clamp 100 of FIG. 1 as viewed from a lateral end surface thereof containing the central portion 102 and the wings 104. As depicted in FIG. 3, the wings 104 may also include an angle relative to the longitudinal axis L of the clamp 100. In other words, the wings 104 may include a slight bend or joint as seen from the end view of the clamp 100. In addition, the gripping portion 124 may be configured to include an addition thickness relative the major plane of the wings 104, as shown in FIGS. 2 and 3.

FIG. 4 depicts a top view of the clamp 100 in use in a dental dam assembly 130. The dental dam assembly 130 including the clamp 100 may be utilized to provide a support structure for retaining a dental dam proximate to an exposed tooth 138 (*e.g.*, a molar). The

dental dam assembly 130 may include a dental dam 132 (*e.g.*, a rubber or latex dental dam) including a dental dam frame 134. The dental dam 132 may include one or more apertures 136 configured to expose and isolate one or more teeth during a dental procedure. As shown in FIG. 4, the exposed tooth 138 may extend through the one or more apertures 136 in the dental dam 132. In order to facilitate retention of the dental dam 132 using the clamp 100, a support structure with sufficient strength of material is required to retain the dental dam 132 proximate the exposed tooth 138 without damaging the exposed tooth 138 and/or surrounding tissue.

While conventional metal retention clamps also retain the dental dam 132 proximate the exposed tooth 138, the metal clamps often require multiple attachment points thereto. In addition, metal retention clamps tend to be uncomfortable to the patient, often requiring the need to anaesthetize the gums proximate the clamps. However, embodiments of the instant disclosure may enable ease of use by surrounding the exposed tooth 138 with the clamp 100 constructed of a polymer material in combination with the unique physical characteristics (*i.e.*, shape and size) as disclosed herein. Such configurations enable the clamp 100 to provide suitable support structure to retain the dental dam 132 without damaging teeth and/or crowns along with surrounding tissue. In addition, use of the clamp 100 including the polymer material enables placement without tearing or otherwise damaging the dental dam 132. Also, as a result of the position of the clamp, which is closer to the gum, without any metal rim interfering, the dentist is enabled to preform an occlusal bite check while the dam is in place without any interference from the metal rim or other portion of the clamp.

In addition, metal retention clamps may require help from an assistant and may require placement with forceps. In contrast, the clamp 100 may be positioned without requiring assistance (*e.g.*, the assistance of another practitioner, such as an assistant). Further, the one or more holes 126 of the clamp 100 may be located and configured to enable retention of a dental instrument in order to facilitate stretching the wings 104 and to ensure accurate placement of the clamp 100. In this manner, the clamp 100 may permit the dental dam 132 to be safely retained within the mouth of the subject during the procedure. The clamp 100 may be available in more than one size, for example, a smaller size for incisors and/or canines (*i.e.*, front teeth) or pediatric molars and a larger size for molar and premolar teeth, providing a sensible alternative to multiple size options of the metal retainer clamps. Another advantage over metal retention clamps includes the clamp 100

using relatively inexpensive materials and manufacturing processes, enabling an affordable single use (*i.e.*, disposable) article. Further, the clamp 100 involves an easy learning curve as the clamp 100 is easily and quickly positioned, thereby saving time during a procedure.

Conventional devices for shielding teeth may also include a DMG MINIDAM® commercially available from DMG America, of Englewood, NJ. However, the DMG MiniDam itself constitutes a smaller version of a dental dam rather than a clamp to hold a traditional dental dam in place. Therefore, the DMG MiniDam may not protect a subject from inhalation of materials and may not completely isolate teeth from the oral environment. The DMG MiniDam is disclosed in International Publication No. WO 2015/124785, the disclosure of which is hereby incorporated herein in its entirety by this reference. Another device for retaining a dental dam is disclosed in International Publication No. WO 96/39984, the disclosure of which is hereby incorporated herein in its entirety by this reference.

With continued reference to FIG. 4, the aperture 136 of the dental dam 132 may be aligned over an occlusal surface (*i.e.*, bite side) of the exposed tooth 138. In some embodiments, the dental dam 132 may be attached to the dental dam frame 134 for stability in handling and to add tension to the fabric of the dental dam 132. In some embodiments, application of the clamp 100 includes positioning the clamp 100 (*e.g.*, after positioning the dental dam 132) by grasping the wings 104 of the clamp 100 and applying tension in a tensioning direction along the longitudinal axis L to elongate the thin bands 118 proximate the central aperture 108 of the clamp 100. The central aperture 108 of the clamp 100 may then be centered over the exposed tooth 138. The thin bands 118 may be secured in an intermediate space between adjacent teeth by applying pressure in a downward direction in order to position the thin bands 118 proximate the base of the exposed tooth 138 and proximate the gingiva (*i.e.*, gums). In other words, stretching the clamp 100 will enable the thin bands 118 to fully extend in order to elongate the thin bands 118 reducing the cross-sectional area thereof to any suitable size (*e.g.*, longer, thinner, *etc.*) relative to the resting position of the thin bands 118 in order to facilitate insertion between adjacent teeth.

Once positioned, the applied tension of the thin bands 118 may be released by releasing the wings 104. The thin bands 118 may then return to their resting position, filling intermediate spaces around the exposed tooth 138. As depicted, surface areas of the wings 104 are configured to retain the dental dam 132 proximate the exposed tooth 138 while the thin bands 118 remain located between interproximal surface of the exposed

tooth 138 and adjacent teeth during the dental procedure. Stated in another way, the clamp 100 may provide structural support to retain the dental dam 132 in place during the procedure by allowing the wings 104 to engage the fabric of the dental dam 132. Following the procedure, the clamp 100 may be released from the dental dam 132 by grasping the wings 104 and applying tension along the tensioning direction of the longitudinal axis L in order to re-stretch the thin bands 118 to facilitate removal thereof. Once the clamp 100 has been removed, the dental dam 132 may also be removed.

In other embodiments, the clamp 100 may be placed prior to placement of the dental dam 132. For example, the clamp 100 may be placed in a similar manner to that discussed above. Thereafter, the dental dam 132 may be placed by moving (*e.g.*, bending, rotating) the wings 104 and passing (*e.g.*, threading) the wings 104 though the aperture 136. The wings 104 may be released and returned back in their original configuration in order to secure the dental dam 132.

In some embodiments, the clamp 100 may be utilized to at least partially prevent cement from entering the gingival tissue of a subject by separating excess cement from the tissue of the subject. Such a feature may be utilized while cementing a crown on an implant abutment or prepped tooth and/or as an aid on the cementation of onlays, inlays, or veneers, *etc.*

In some embodiments, the clamp 100 may be utilized to at least partially prevent gingival crevicular fluid (GCF) and/or blood from contaminating and interfering during cementation, bonding a restoration at the cervical part of the tooth or crown.

FIG. 5 depicts an isometric view of a clamp for use in a dental procedure, such as, for example, an at least partially flexible clamp 200 for retaining a dental dam that may be at least partially similar to the clamp 100 discussed above in relation to FIGS. 1 through 4. FIG. 6 depicts a front plan view of the clamp of FIG. 5. As shown in FIGS. 5 and 6, the clamp 200 comprises a central portion 202. The clamp 200 may also comprise one or more wings 204 (*e.g.*, two opposing wings) attached to and generally extending away from the central portion 202.

The wings 204 may include an inner portion 220, a raised portion 222, and an end portion 224 (*e.g.*, gripping portion) extending outward from the central portion 202. The raised portion 222 may be located near an enlarged midsection of the wings 204 and the end portion 224 may extend (*e.g.*, downward) from the raised portion 222 and inner portion 220 at an angle. For example, and as depicted, the end portion 224 may extend

downward at a relatively greater angle than the clamp 100 (FIG. 1) (*e.g.*, 45 degrees or more, 50 degrees or more, *etc.*) from a midline (*e.g.*, similar to axis L (FIG. 1)) of the clamp 200. One or more of the end portions 224 may include a terminal end 228 having a reduced cross section. For example, the end portion 224 may taper to the terminal end 228, which may end in the form of a point (*e.g.*, a rounded point) that extends substantially in the same angled direction as the end portion 224 from the raised portion 222.

As depicted, the wings 204 may each include a respective hole 226 in an outer end thereof remote from the central portion 202 (*e.g.*, proximate the raised portion 222). As above, one or more of the holes 226 may be utilized with another dental instrument to manipulate the clamp 200.

In some embodiments, the clamp 200 may include a feature and/or mechanism that interacts with an adjacent structure (*e.g.*, another portion of the clamp 200) to secure one or more of the wings 204 in a displaced position (*e.g.*, a displaced position that enhances the ability of the user to thread the wing(s) 204 through an aperture in the dental dam 132 (FIG. 4)). Such a displaced position may be an upward position extending in a direction transverse (*e.g.*, perpendicular) to the axis L (FIG. 1) (*e.g.*, where one or both wings 204 extend from and substantially over the central portion 202).

For example, the clamp 200 may include one or more retention features (*e.g.*, ring 230) on a portion of the clamp 200 (*e.g.*, on a portion of one of the wings 204, such as, for example, the end portion 224). For example, the ring 230 may be coupled to (*e.g.*, partially embedded within) one of the wings 204. In some embodiments, the ring 230 may be substantially continuous and extend through at least a majority of (*e.g.*, an entirety) of the wing 204 (*e.g.*, in a lateral direction). In some embodiments, the ring 230 may be discontinuous (*e.g.*, a split ring) and extend only into a portion of the wing 204 to secure the ring 230 to the clamp 200. In some embodiments, the ring 230 may be coupled to the clamp 200 to enable the ring 230 to move (*e.g.*, rotate) relative to a portion of the clamp 200 (*e.g.*, the wing 204).

In other embodiments, a portion of the clamp 200 (*e.g.*, one or more of the wings 204) may include other retention and/or attachment features that interact with an another adjacent structure of the clamp 200 (*e.g.*, the other wing 204) to secure one or more of the wings 204 in the displaced position, for example, an upward position extending in a direction transverse (*e.g.*, perpendicular) to the axis L (FIG. 1). For example, one or more of the wings 204 (*e.g.*, both wings 204) may include attachment features, such as,

complementary fastening features, buttons, latches, hook-and-loop connectors, adhesives, combinations thereof, or other suitable features, to place the wing(s) 204 in the displaced position (*e.g.*, where both wings extend over the center portion 202).

In operation, the ring 230 (or other fastening feature) may be utilized to secure one or more of the wings 204 (*e.g.*, both wings 204) in the displaced positioned over (*e.g.*, substantially in vertical alignment with) the central portion 202. For example, the wings 204 may be lifted over the central portion 202 and the ring 230 may be rotated to capture a portion of the opposing wing 204 (*e.g.*, the wing 204 lacking the ring 230) in an opening 232 of the ring 230. For example, at least a portion of the end portion 224 (*e.g.*, the raised portion 222 and, optionally, the inner portion 222) of the opposing wing 204 lacking the ring 230 may be threaded through the opening 232. Once in the opening 232, a portion of the wings 204 (*e.g.*, the terminal end or portion 228, the end portion 224, the raised portion 222, or combinations thereof) may contact the ring 230 and secure the wings 204 in the displaced position.

In some embodiments, the wings 204 may be biased in the extended position (*e.g.*, as shown in FIGS. 5 and 6) in order to secure the wing 204 that is inserted into the ring 230 by applying an outward force on the ring 230 that is countered by the bias of the other wing 204 having the ring 203.

As noted above, the moving and securing the wings 204 in such a manner may enhance the ability of the user to thread the wing(s) 204 through an aperture in the dental dam 132 (FIG. 4). For example, such a feature minimizes the cross-sectional area of the clamp 200 in order for the clamp 200 to be threaded through the dental dam 132 without requiring substantially increasing the size of an aperture in the dam 132 that is to be fitted around a tooth and/or teeth.

In some embodiments, the ring 230 may be utilized to manipulate the clamp 200 during placement of the clamp 200 (*e.g.*, using the ring 230 to assist in placing the clamp 200 over a tooth) and/or may be used to manipulate the clamp 200 during placement of the dental dam 132 (FIG. 4) (*e.g.*, using the ring 230 to thread to a portion of the clamp 200 through the dental dam 132).

FIG. 7 depicts an isometric view (*e.g.*, a top view) of a clamp for use in a dental procedure, such as, for example, an at least partially flexible clamp 300 for retaining a dental dam that may be at least partially similar to the clamps 100, 200 discussed above in relation to FIGS. 1 through 6. FIG. 8 depicts another isometric view (*e.g.*, a bottom view) of

the clamp of FIG. 7. As shown in FIGS. 7 and 8, the clamp 300 comprises a central portion 302. The clamp 300 may also comprise one or more wings 304 (*e.g.*, two opposing wings) attached to and generally extending away from the central portion 302 along a longitudinal axis of the clamp 300. The central portion 302 may include one or more bands 320 (*e.g.*, two reinforced, semicircular bands 320, similar to the bands discussed above) at least partially surrounding a web portion 306. A central aperture 308 may be defined within at least a portion of an interior area of the web portion 306 (*e.g.*, a thin band). The web portion 306 may have a decreased thickness (*e.g.*, as compared to one or more adjacent portions of the clamp 300, such as, portions of the wings) and may easily conform (*e.g.*, elastically deform) around a subject tooth. The central aperture 308 may include an elongated shape (*e.g.*, an elliptical or oval slot) having an enlarged central portion and two relatively narrow side portions as defined by the web portion 306.

In some embodiments, one or more recesses 336 may be defined at the central portion 302 (*e.g.*, in bands 320 providing a thickness similar or the same as the web portion 306). Such recesses 336 may act to enable the central portion 302 to be elongated in order to be positioned over a tooth or teeth.

In some embodiments, the wings 304 may include recessed portions 336 (*e.g.*, concave) extending along the length (*e.g.*, a majority of the length) of the wings 304. Such recessed portions 334 may act to enhance the ability of the clamp 300 to be stretched (*e.g.*, by providing a reduced thickness and/or by providing additional areas for a user to grasp the clamp 300).

In some embodiments, the bands 320 may include raised portions 340 at lateral sides of the central portion 302 (*e.g.*, bordering the recesses 336) and transition portions 338 (*e.g.*, portions that are rounded, tapered, chamfered, sloped, etc.) that gradually transition from the central portion 302 (*e.g.*, the web portion 306) to a portion of the wings 304 (*e.g.*, the recessed portions 336). In other embodiments, the bands 320 may include raised portions 340 along a majority or an entirety of the bands 320.

As above, the wings 304 may include an inner portion 321, a raised portion 322, and an end portion 324 (*e.g.*, gripping portion, which may be used in conjunction with the recessed portions 334) extending outward from the central portion 302. The raised portion 322 may be located near an enlarged midsection of the wings 304 and the end portion 324 may extend (*e.g.*, downward) from the raised portion 322 and inner portion 321 at an angle. One or more of the end portions 324 may include a terminal end 328 having a reduced

cross section. For example, the end portion 324 may taper to the terminal end 328, which may end in the form of a point (*e.g.*, a rounded point) that extends substantially in the same angled direction as the end portion 324 from the raised portion 322.

As depicted, the wings 304 may each include a respective hole 326 in an outer end thereof remote from the central portion 302 (*e.g.*, proximate the raised portion 322). As above, one or more of the holes 326 may be utilized with another dental instrument to manipulate the clamp 300.

In some embodiments, the clamp 300 may include a feature and/or mechanism that interacts with an adjacent structure (*e.g.*, another portion of the clamp 300) to secure one or more of the wings 304 in a displaced position (*e.g.*, a displaced position that enhances the ability of the user to thread the wing(s) 304 through an aperture in the dental dam 132 (FIG. 4)). Such a displaced position may be an upward position extending in a direction transverse (*e.g.*, perpendicular) to the axis L (FIG. 1) (*e.g.*, where one or both wings 304 extend from and substantially over the central portion 302).

For example, the clamp 300 may include one or more retention features (*e.g.*, ring 330) on a portion of the clamp 300 (*e.g.*, on a portion of one of the wings 304, such as, for example, the end portion 324). For example, the ring 330 may be coupled to (*e.g.*, partially embedded within) one of the wings 304. In some embodiments, the ring 330 may be substantially continuous and extend through at least a majority of (*e.g.*, an entirety) of the wing 304 (*e.g.*, in a lateral direction). In some embodiments, the ring 330 may be discontinuous (*e.g.*, a split ring) and extend only into a portion of the wing 304 to secure the ring 330 to the clamp 300. In some embodiments, the ring 330 may be coupled to the clamp 300 to enable the ring 330 to move (*e.g.*, rotate) relative to a portion of the clamp 300 (*e.g.*, the wing 304).

In other embodiments, a portion of the clamp 300 (*e.g.*, one or more of the wings 304) may include other retention and/or attachment features that interact with an another adjacent structure of the clamp 300 (*e.g.*, the other wing 304) to secure one or more of the wings 304 in the displaced position, for example, an upward position extending in a direction transverse (*e.g.*, perpendicular) to the axis L (FIG. 1). For example, one or more of the wings 304 (*e.g.*, both wings 304) may include attachment features, such as, complementary fastening features, buttons, latches, hook-and-loop connectors, adhesives, combinations thereof, or other suitable features, to place the wing(s) 304 in the displaced position (*e.g.*, where both wings extend over the center portion 302).

In operation, the ring 330 (or other fastening feature) may be utilized to secure one or more of the wings 304 (*e.g.*, both wings 304) in the displaced positioned over (*e.g.*, substantially in vertical alignment with) the central portion 302. For example, the wings 304 may be lifted over the central portion 302 and the ring 330 may be rotated to capture a portion of the opposing wing 304 (*e.g.*, the wing 304 lacking the ring 330) in an opening 332 of the ring 330. For example, at least a portion of the end portion 324 (*e.g.*, the raised portion 322 and, optionally, the inner portion 322) of the opposing wing 304 lacking the ring 330 may be threaded through the opening 332. Once in the opening 332, a portion of the wings 304 (*e.g.*, the terminal end or portion 328, the end portion 324, the raised portion 322, or combinations thereof) may contact the ring 330 and secure the wings 304 in the displaced position. For example, the ring 330 may be retained in a notch 329 defined in the terminal portion 328 of the wing 304.

In some embodiments, the wings 304 may be biased in the extended position (*e.g.*, as shown in FIGS. 7 and 8) in order to secure the wing 304 that is inserted into the ring 330 by applying an outward force on the ring 330 that is countered by the bias of the other wing 304 having the ring 303.

As noted above, the moving and securing the wings 304 in such a manner may enhance the ability of the user to thread the wing(s) 304 through an aperture in the dental dam 132 (FIG. 4). For example, such a feature minimizes the cross-sectional area of the clamp 300 in order for the clamp 300 to be threaded through the dental dam 132 without requiring substantially increasing the size of an aperture in the dam 132 that is to be fitted around a tooth and/or teeth.

In some embodiments, the ring 330 may be utilized to manipulate the clamp 300 during placement of the clamp 300 (*e.g.*, using the ring 330 to assist in placing the clamp 300 over a tooth) and/or may be used to manipulate the clamp 300 during placement of the dental dam 132 (FIG. 4) (*e.g.*, using the ring 330 to thread to a portion of the clamp 300 through the dental dam 132).

Embodiments of the present disclosure including a clamp including the polymer material may provide benefits and advantages of retaining the dental dam to allow retention thereof while avoiding damage to healthy teeth and gums. In contrast, many conventional metal retention clamps require rigid attachment to sidewalls of the teeth. Embodiments of the dental dam assembly described herein may be used by pediatric dentists, general

dentists, orthodontists, implant surgeons and/or periodontists and may be employed in many oral surgery and orthodontic procedures.

As noted above, while dental clamps are discussed herein primarily in use with a dental dam assembly, the dental clamps may be utilized with other dental devices and/or procedures. For example, a dental clamp itself, or in conjunction with other devices, may be utilized as dental matrices in a restoration process. Such matrices may be utilized, for example, to form the interproximal surfaces of a tooth during fabrication of a direct restoration. In some embodiments, matrix bands or forms may be held in place by the dental clamp and/or may be integral to the body of the dental clamp. Once the clamp is positioned, the bands or forms may be utilized in forming a restoration on one or more adjacent teeth and/or on the tooth that is surrounded by the dental clamp.

Once being apprised of the instant disclosure, one of ordinary skill in the art will be able to make and use the devices and assemblies disclosed herein.

CLAIMS

What is claimed is:

1. A dental device, comprising:

a clamp comprising a polymer material, the clamp further comprising:

a central portion including at least one band defining a central aperture; and

at least one wing attached to the central portion proximate the at least one band, the at least one wing configured to provide a surface for retaining a portion of another dental device.

2. The device of claim 1, wherein the clamp further comprises:

a raised portion extending linearly across a midsection of the at least one wing transverse to a longitudinal axis of the clamp; and

a gripping portion located on the at least one wing between the raised portion of the at least one wing and the central portion of the clamp.

3. The device of claim 1, wherein the clamp further comprises a web portion proximate the central aperture of the central portion, wherein the web portion restricts at least a portion of the central aperture, the central aperture configured to receive a tooth therethrough proximate the web portion.

4. The device of claim 3, wherein the clamp includes at least two bands and the central portion includes at least one recess defined between the at least two bands.

5. The device of claim 1, wherein the at least one band comprises two bands, and wherein the central portion includes two recesses positioned between the two bands at two lateral locations of the clamp, wherein each of the two bands and the two recesses each define a portion of the central aperture.

6. The device of claim 1, further comprising at least one hole in an outer end of the at least one wing remote from the central portion, wherein the at least one hole is located and configured to enable retention of a dental instrument.

7. The device of any one of claims 1 through 6, further comprising a retention feature on the at least one wing configured to position the at least one wing at least partially over the central portion.

8. The device of claim 7, wherein the at least one wing comprises two wings, and wherein the retention feature is configured to secure the two wings together at least partially over the central portion.

9. The device of claim 8, wherein the retention feature comprises a ring on one of the two wings, wherein the ring is configured to receive the other one of the two wings through an opening in the ring in order to secure the two wings together at least partially over the central portion.

10. The device of any one of claims 1 through 6, wherein a majority of the central portion and the at least one wing extends along a longitudinal axis of the clamp in a normal position and further comprising a retention feature on the at least one wing configured to position the at least one wing in a direction extending transverse to the longitudinal axis in a retained position.

11. A dental dam assembly, comprising:

a dental dam; and

a flexible clamp configured to retain the dental dam, the flexible clamp comprising:

a central portion including at least one band defining a central aperture; and

at least one wing attached to the central portion proximate the at least one band, the at least one wing configured to provide a surface to retain the dental dam relative to a tooth.

12. The dental dam assembly of claim 11, wherein the clamp comprises the device of any one of claims 1 through 10.

13. A method of retaining a dental dam, comprising:

grasping at least one wing of a clamp;

applying tension along an axis of the clamp to elongate at least one band proximate an aperture of a central portion of the clamp;

centering the aperture of the central portion over an exposed tooth;

securing a portion of the at least one band in an intermediate space between adjacent teeth by applying pressure to position the at least one band proximate the gingiva;

releasing the applied tension to enable the at least one band to at least partially surround the exposed tooth; and

retaining the dental dam proximate the exposed tooth with the at least one wing.

14. The method of claim 13, further comprising positioning an aperture of the dental dam over the exposed tooth prior to placing the clamp.

15. The method of claim 13, further comprising placing the clamp over the tooth prior to positioning an aperture of the dental dam over the exposed tooth.

16. The method of any one of claims 13 through 15, further comprising:

moving the at least one wing to a displaced position extending at least partially over the central portion; and

retaining the at least one wing in the displaced position with a retention feature.

17. A device for retaining a dental dam comprising a flexible clamp circumscribing a central aperture and for receiving at least one tooth of a subject in the central aperture.

18. A dental dam assembly, comprising:

a dental dam; and

a flexible clamp circumscribing a central aperture and for receiving at least one tooth of a subject in the central aperture to retain the dental dam relative to the at least one tooth.

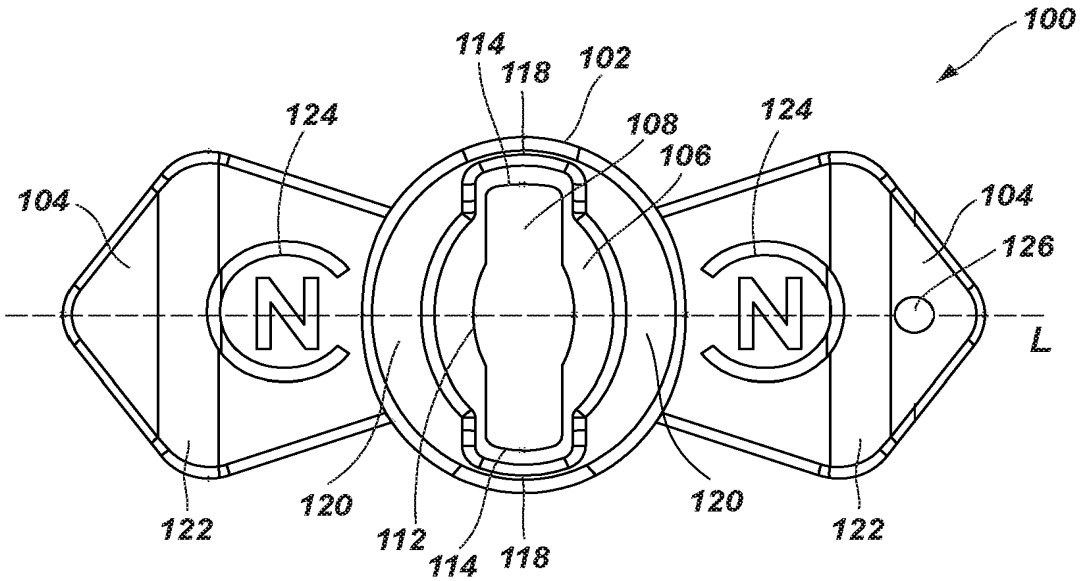

FIG. 1

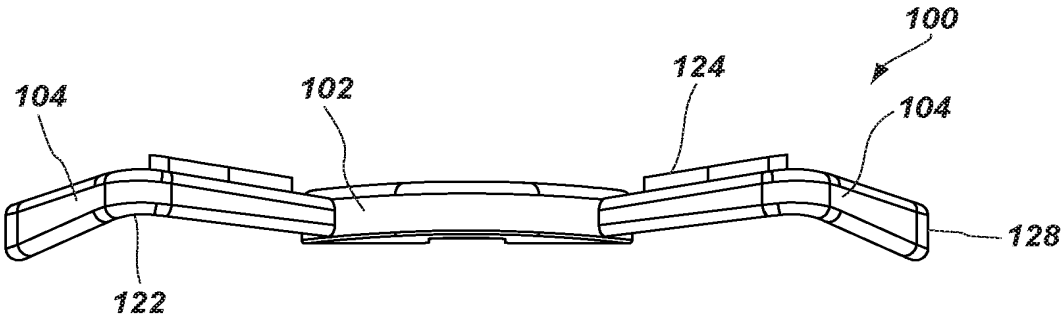

FIG. 2

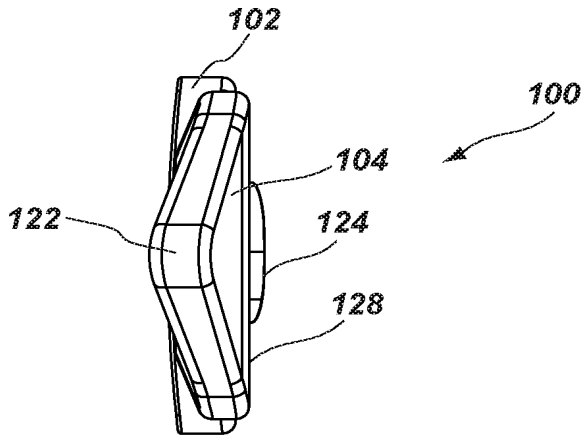

FIG. 3

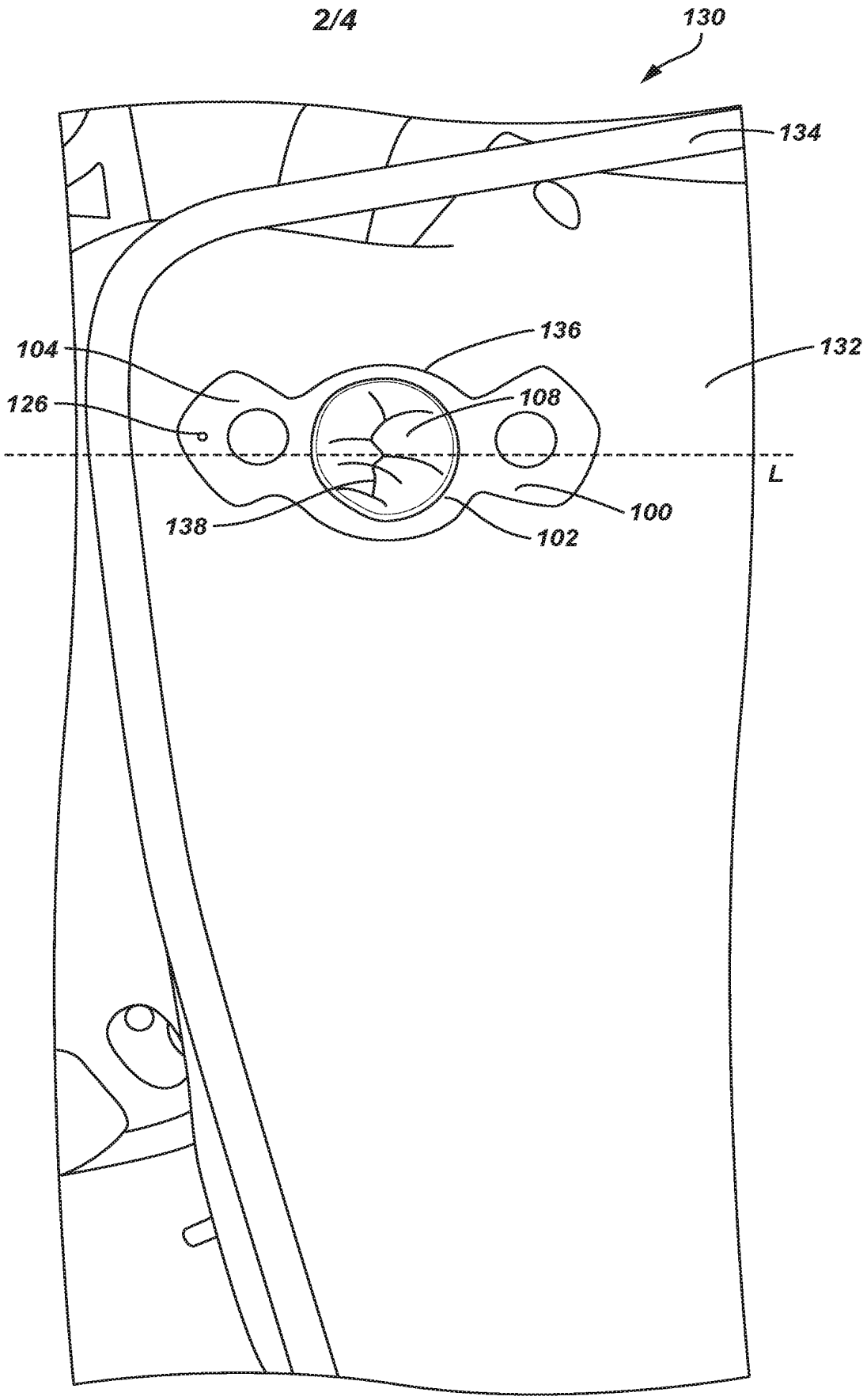

FIG. 4

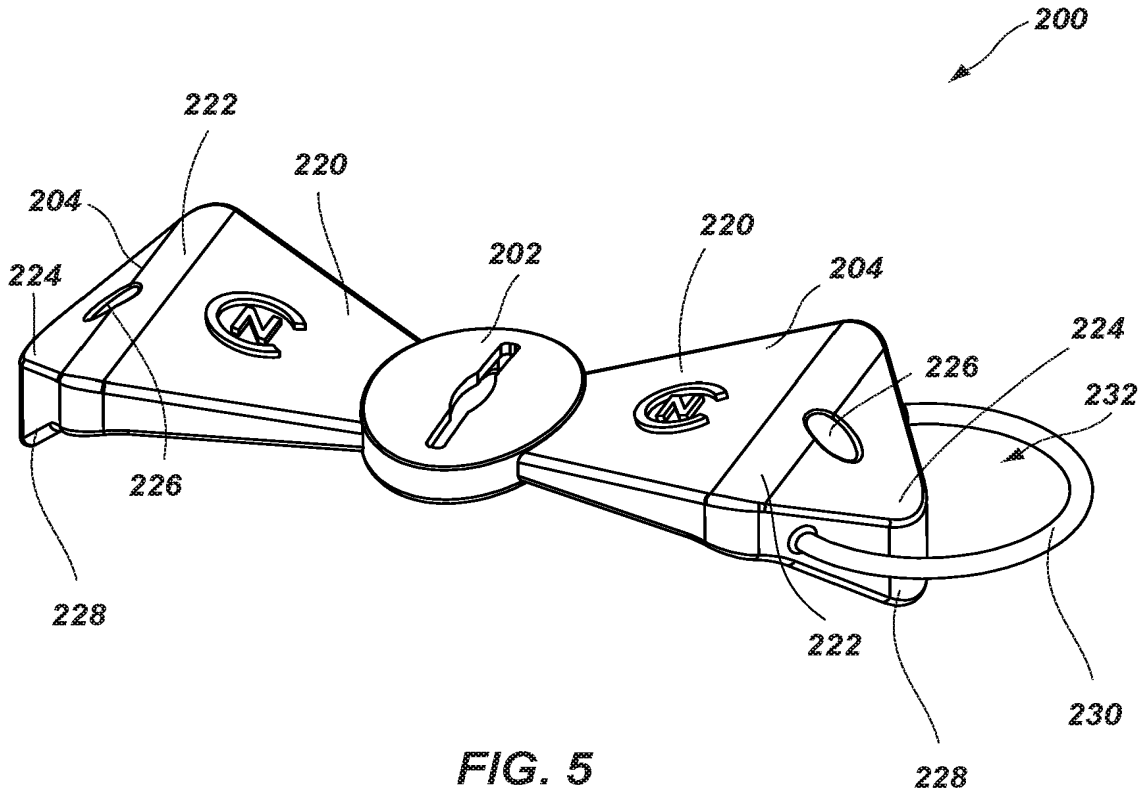
200
222
220
204
202
220
204
224
224
226
226
232
228
222
230
228

FIG. 5

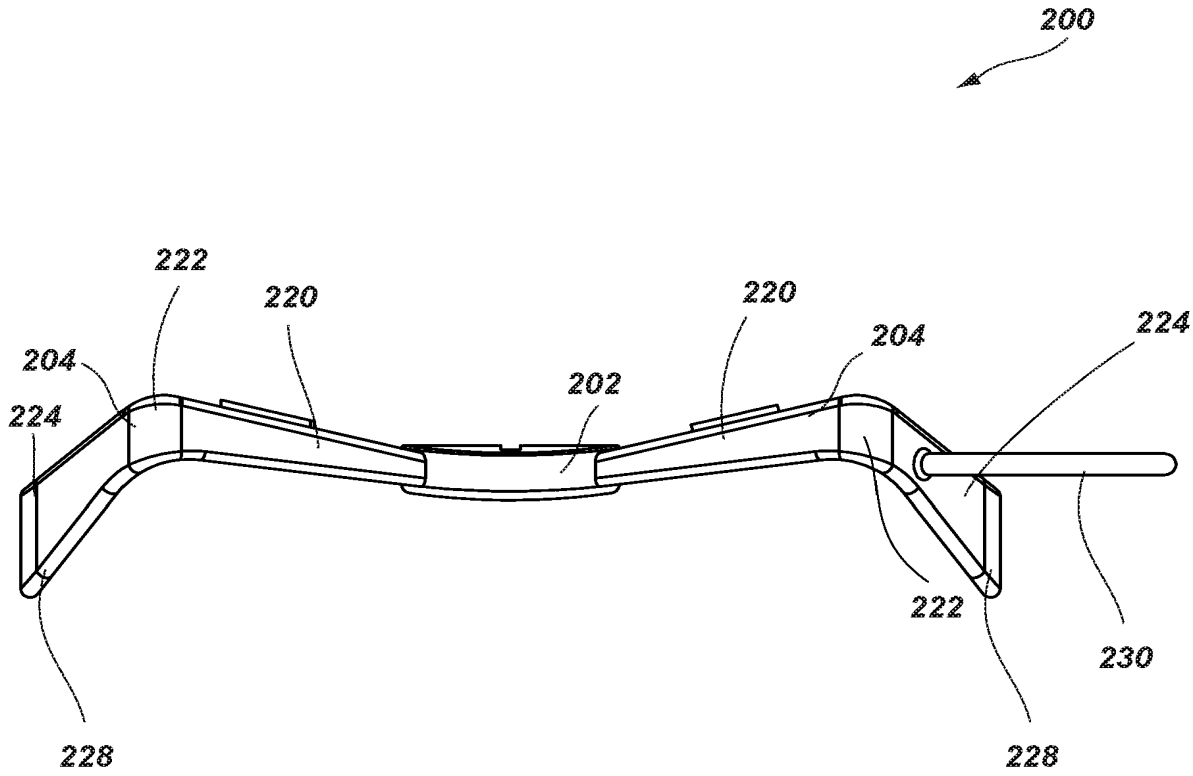
200
222
220
220
204
224
204
202
224
222
230
228
228

FIG. 6

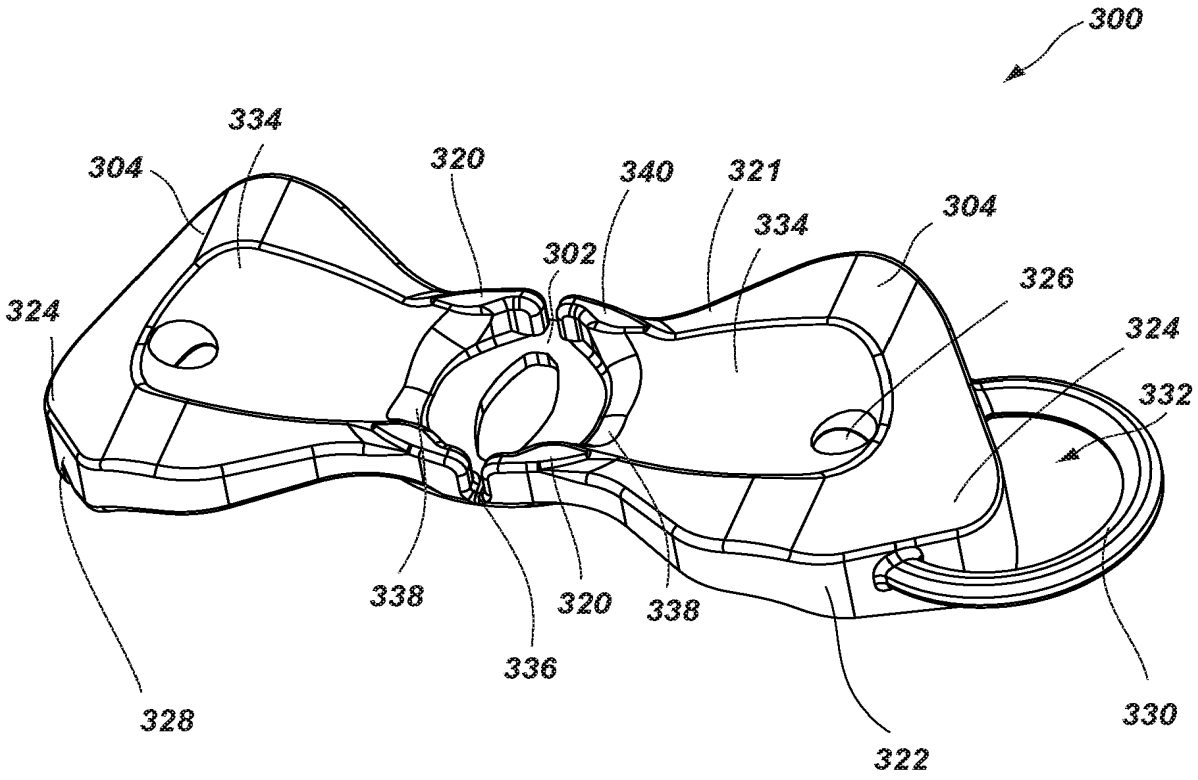
300
334
304
320
340
321
304
334
302
326
324
324
332
338
320
338
336
328
322
330

FIG. 7

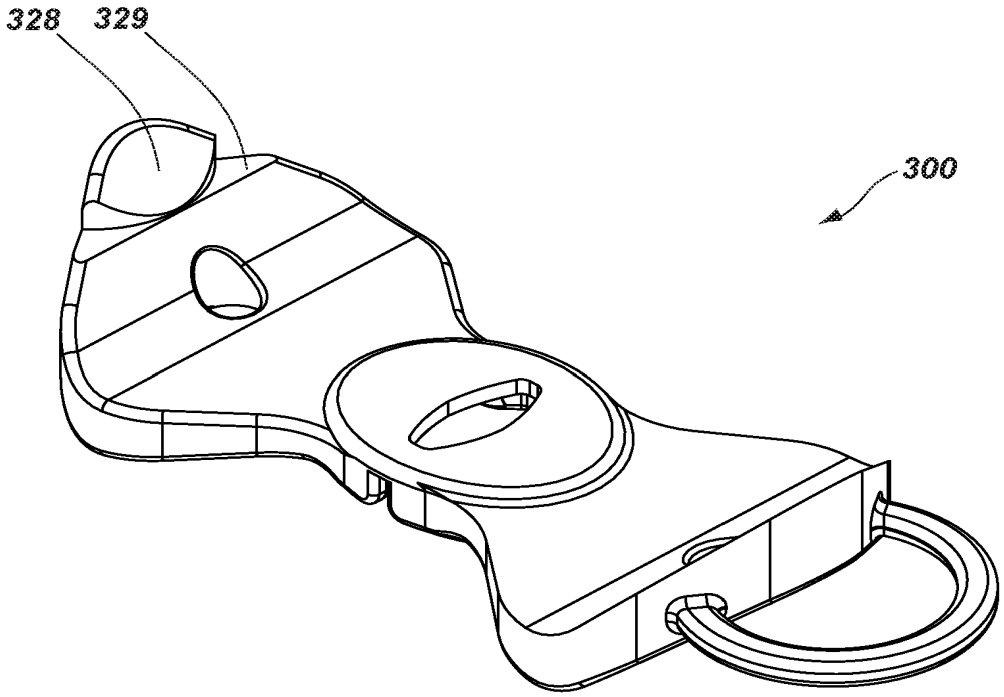
328
329
300

FIG. 8

INTERNATIONAL SEARCH REPORT

International application No.
PCT/US17/68979

A. CLASSIFICATION OF SUBJECT MATTER
IPC - A61C 5/82, 5/85, 5/90 (2018.01)
CPC - A61C 5/82, 5/85, 5/90

According to International Patent Classification (IPC) or to both national classification and IPC

B. FIELDS SEARCHED

Minimum documentation searched (classification system followed by classification symbols)
See Search History document

Documentation searched other than minimum documentation to the extent that such documents are included in the fields searched
See Search History document

Electronic data base consulted during the international search (name of data base and, where practicable, search terms used)
See Search History document

C. DOCUMENTS CONSIDERED TO BE RELEVANT

Category*	Citation of document, with indication, where appropriate, of the relevant passages	Relevant to claim No.
X -- Y	DE 202014010138 U1 (MUHLBAUER TECHNOLOGY GMBH) March 10, 2015; see translation; abstract; paragraphs [0022], [0046], [0054]-[0055]; figures 4-5	1-6 --- 10/1-6
X -- Y	US 1,336,746 A (IVORY, JW) April. 13, 1920; figures 6-7; pages 1-2	11, 13-14, 17-18 --- 15
Y	US 2005/0244787 A1 (SUMMER, JD) November 3, 2005; figures 2, 7; paragraph [0035]	10/1-6
Y	US 2013/0252198 A1 (BOOS, J, et al.) September 26, 2013; figure 5; paragraphs [0023], [0027], [0031]	15

☐ Further documents are listed in the continuation of Box C. ☐ See patent family annex.

* Special categories of cited documents:
"A" document defining the general state of the art which is not considered to be of particular relevance
"E" earlier application or patent but published on or after the international filing date
"L" document which may throw doubts on priority claim(s) or which is cited to establish the publication date of another citation or other special reason (as specified)
"O" document referring to an oral disclosure, use, exhibition or other means
"P" document published prior to the international filing date but later than the priority date claimed
"T" later document published after the international filing date or priority date and not in conflict with the application but cited to understand the principle or theory underlying the invention
"X" document of particular relevance; the claimed invention cannot be considered novel or cannot be considered to involve an inventive step when the document is taken alone
"Y" document of particular relevance; the claimed invention cannot be considered to involve an inventive step when the document is combined with one or more other such documents, such combination being obvious to a person skilled in the art
"&" document member of the same patent family

Date of the actual completion of the international search	Date of mailing of the international search report
25 February 2018 (25.02.2018)	26 MAR 2018
Name and mailing address of the ISA/ Mail Stop PCT, Attn: ISA/US, Commissioner for Patents P.O. Box 1450, Alexandria, Virginia 22313-1450 Facsimile No. 571-273-8300	Authorized officer Shane Thomas PCT Helpdesk: 571-272-4300 PCT OSP: 571-272-7774

Form PCT/ISA/210 (second sheet) (January 2015)

INTERNATIONAL SEARCH REPORT

International application No.
PCT/US17/68979

Box No. II Observations where certain claims were found unsearchable (Continuation of item 2 of first sheet)

This international search report has not been established in respect of certain claims under Article 17(2)(a) for the following reasons:

1. ☐ Claims Nos.:
because they relate to subject matter not required to be searched by this Authority, namely:

2. ☐ Claims Nos.:
because they relate to parts of the international application that do not comply with the prescribed requirements to such an extent that no meaningful international search can be carried out, specifically:

3. ☒ Claims Nos.: 12
because they are dependent claims and are not drafted in accordance with the second and third sentences of Rule 6.4(a).

Box No. III Observations where unity of invention is lacking (Continuation of item 3 of first sheet)

This International Searching Authority found multiple inventions in this international application, as follows:

1. ☐ As all required additional search fees were timely paid by the applicant, this international search report covers all searchable claims.

2. ☐ As all searchable claims could be searched without effort justifying additional fees, this Authority did not invite payment of additional fees.

3. ☐ As only some of the required additional search fees were timely paid by the applicant, this international search report covers only those claims for which fees were paid, specifically claims Nos.:

4. ☐ No required additional search fees were timely paid by the applicant. Consequently, this international search report is restricted to the invention first mentioned in the claims; it is covered by claims Nos.:

Remark on Protest

☐ The additional search fees were accompanied by the applicant's protest and, where applicable, the payment of a protest fee.

☐ The additional search fees were accompanied by the applicant's protest but the applicable protest fee was not paid within the time limit specified in the invitation.

☐ No protest accompanied the payment of additional search fees.

(19) RÉPUBLIQUE FRANÇAISE

INSTITUT NATIONAL
DE LA PROPRIÉTÉ INDUSTRIELLE

PARIS

(11) **N° de publication :** **2 992 161**
(à n'utiliser que pour les commandes de reproduction)

(21) **N° d'enregistrement national :** **12 01799**

(51) Int Cl[8] : ***A 61 C 5/14*** *(2013.01)*

(12) DEMANDE DE BREVET D'INVENTION A1

(22) **Date de dépôt :** 26.06.12.

(30) **Priorité :**

(43) **Date de mise à la disposition du public de la demande :** 27.12.13 Bulletin 13/52.

(56) **Liste des documents cités dans le rapport de recherche préliminaire :** *Se reporter à la fin du présent fascicule*

(60) **Références à d'autres documents nationaux apparentés :**

(71) **Demandeur(s) :** *BRAUD VINCENT* — FR.

(72) **Inventeur(s) :** BRAUD VINCENT.

(73) **Titulaire(s) :** BRAUD VINCENT.

(74) **Mandataire(s) :** CABINET DAVID TOURNEL.

(54) PROTECTION INTRA-BUCCALE.

(57) L'invention a pour objet un dispositif de protection buccale comprenant une cale 2 dentaire destinée à se positionner entre les arcades dentaires d'un coté de la bouche, une lame 3 de protection comportant une première partie 3A repoussant la langue et une seconde partie 3B venant en appui sur l'autre coté de la bouche dans le vestibule ce dispositif étant caractérisé en ce que la seconde partie de la lame est prolongée par un retour 3C pour former un crochet se positionnant à la commissure des lèvres.

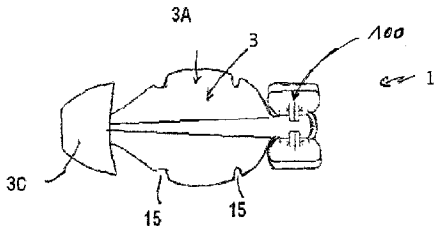

FR 2 992 161 - A1

PROTECTION INTRA-BUCCALE.

L'invention se rapporte à un dispositif de protection de la cavité buccale lors des interventions sur les dents.

Lors des interventions sur les dents, le patient doit tenir la bouche ouverte. Le chirurgien peut alors accéder aux dents pour intervenir sur celles-ci en prenant soin de ne pas blesser l'intérieur de la joue et/ou la langue.

Donc, pour accéder aux dents, le patient doit maintenir la bouche ouverte ce qu'il fait. Cependant si l'intervention est longue, les mâchoires se rapprochent progressivement car maintenir la bouche ouverte pendant une longue période n'est pas facile.

Le premier problème est donc le maintien de la bouche ouverte.

Le second problème est d'éviter de blesser la langue et/ou l'intérieur de la joue

Une technique ancienne, encore utilisée, consiste à écarter la joue et la langue avec des tampons cylindriques en coton que l'on place de part et d'autre de la zone de travail et/ou entre les arcades dentaires.

Cette technique a été améliorée par des dispositifs qui permettent de repousser la langue vers l'arrière et maintenir la bouche ouverte.

Pour maintenir la bouche ouverte, il existe donc des dispositifs comportant une cale épaisse que l'on positionne entre les arcades inter-dentaires du coté opposé à celui où se localise la dent à traiter.

Pour protéger la cavité buccale, il est connu d'utiliser une lame qui vient s'accrocher sur la cale épaisse précitée et se positionne pour repousser la langue derrière la lame.

Cette lame comporte une partie qui repousse la langue qui se raccorde à un volet latéral qui s'appuie sur l'autre coté de la bouche en se positionnant entre la joue et les dents dans le vestibule. La lame déployée à plat forme en vue de face une sorte de huit couché.

Pour que cette lame se positionne correctement et reste en place, la liaison entre la cale dentaire et la lame est rigide en sorte que c'est le positionnement de la cale qui oriente la lame. La rigidité de la liaison est contraignante dans la conception du dispositif et dans le positionnement car chaque bouche est particulière alors que le dispositif est du type standard.

L'invention vise à apporter une solution aux problèmes évoqués plus haut.

A cet effet, l'invention a pour objet un dispositif de protection buccale comprenant une cale dentaire destinée à se positionner entre les arcades dentaires d'un coté de la bouche, une lame de protection comportant une première partie repoussant la langue et une seconde partie venant en appui sur l'autre coté de la bouche ce dispositif étant caractérisé en ce que la seconde partie de la lame est prolongée par un retour pour former un crochet se positionnant à la commissure des lèvres .

L'invention sera bien comprise à l'aide de la description ci après faite à titre d'exemple non limitatif en regard du dessin qui représente :

FIG 1 : Le dispositif de protection vue en perspective

FIG 2 : le dispositif de la figure 1 vue de face

FIG 3 : le dispositif de la figure 1 vue de dessus

FIG 4 : La lame du dispositif de la figure 1 seule

FIG 5 : la lame de la figure 4 vue de face

FIG 6 : la cale seule en perspective

FIG 7 : la cale de la figure 6 en vue latérale

En se reportant au dessin, on voit un dispositif 1de protection buccale que l'on utilise pour les interventions dentaires. Ce dispositif est destiné à maintenir la bouche du patient ouverte et pour cela, on utilise une cale 2 dont la hauteur et sa position au niveau des arcades dentaires détermine l'ouverture de la bouche.

A cette cale est associée une lame 3 de protection comportant une première partie 3A et une seconde partie 3B venant en appui sur l'autre coté de la bouche ce dispositif étant caractérisé en ce que la seconde partie 3B de la lame est prolongée par un retour 3C destiné à s'appuyer sur la joue externe pour former un crochet se positionnant à la commissure des lèvres.

Le crochet est tourné vers l'arrière.

Lorsque le dispositif est mis en place, il est tenu aux deux extrémités. Il est donc immobilisé d'un coté par la cale entre les mâchoires et de l'autre coté par le crochet qui, formé par la seconde partie 3B et le retour 3C, est engagé avec la joue.

Il y a donc un positionnement sécurisant.

La première partie 3A repousse la langue et la protège, La seconde partie 3B vient protéger la joue en se glissant entre la joue et les dents, cette zone étant appelée le vestibule.

En outre, la première partie 3A de la lame à une hauteur supérieure à la distance entre le plancher et le palais de la bouche ce qui contraint la lame à se plier lorsqu'elle est mise en place et donc cet « écrasement » augmente le maintien. Entre les différentes parties de la lame, il y a une réduction de matière pour pouvoir orienter les parties les unes par rapport aux autres. On notera que la

réduction 30 entre la première partie 3A de la lame et la seconde partie 3B permet de se positionner derrière les molaires et d'obtenir un calage par pincement.

La mise en place peut commencer par le positionnement du crochet puis par la position de la cale. Une pose en commençant par la cale est possible.

Ce retour ne sert pas à la protection mais permet de remplacer une liaison rigide entre la lame et la cale, par une liaison souple 100 du type à emboitement rapide avec un jeu facilitant l'orientation de la lame par rapport à la cale. La liaison se fait sur la face avant de la cale, c'est-à-dire la face de la cale opposée au fond de la bouche.

La liaison 100 entre la cale et la lame se présente de la manière suivante :

La lame 3 comporte une pièce mâle 5 en forme de profilé en Cé, la concavité 6 du Cé étant orientée vers la cale , ce profilé venant s'emboiter dans une cavité 7 complémentaire avec une ouverture déformable pour le passage en force du Cé. La cavité 7 recevant le profilé en Cé est située à l'avant de la cale.

Lorsque la lame est associée à la cale, la concavité 6 du profilé coiffe un bourrelet 8. Ce profilé en Cé peut légèrement se déplacer angulairement par rapport à ce bourrelet et par conséquence permettre l'orientation de la lame 3. La cale présente donc une élasticité permettant le montage du profilé en Cé par déformation élastique de la cale en ouvrant les lèvres 9 qui réduisent l'entrée de la cavité. Le montage de cette lame permet des ajustements en rotation et en translation de la lame par rapport à la cale. Le réglage est facilité car l'autre extrémité de la lame est positionnée à la commissure des lèvres.

L'extrémité libre de cette forme en demi-tube (profile en Cé) présente une butée 5A qui limite le déplacement axial du dit profilé dans la cavité 7 ouverte de la cale. La forme en demi-tube peut coulisser dans la limite de sa longueur

La cale est donc élastiquement déformable en compression et présente deux zones d'appui opposées pour les dents.

Cette élasticité (reste faible) de la cale présente un autre avantage pour le patient qui peut mordre la cale sans percevoir une mauvaise sensation et en mordant cette cale, il vient pincer le profilé en Cé qui se verrouille.

.

On a donc réalisé une fixation rapide, ajustable et souple.

Cette forme en demi-tube (hemi-cylindre creux) localisée sur le coté de la lame pour constituer une des deux parties complémentaires d'un moyen de liaison avec la cale se prolonge sensiblement jusqu'au bout de la deuxième partie de la lame avant le retour formant ainsi une nervure 10 longitudinale qui donne à la lame une rigidité dans sa forme ondulée longitudinalement.

Si on regarde le dispositif, la première partie 3A a une forme de feuille allongée qui après élargissement se rétrécie en s'éloignant de la cale pour se prolonger par une zone de transition 30 qui est courbe et positionne la deuxième partie 3B dans une direction de l'ordre de 90° par rapport à la première partie et, cette deuxième partie est prolongée par un retour 3C pour former un crochet.

La lame présente une face courbe dont la concavité est orientée vers l'avant donc vers l'entrée de la bouche. Le choix des variations d'épaisseurs de lame et de leurs localisations confère à cette lame plus ou moins de souplesse.

On notera la présence d'encoches 15 sur le bord de la lame pour permettre aux fluides de circuler et qui seront aspirés par un moyen non représenté.

Comme cela a été dit, la cale est compressive donc non strictement rigide. Des nervures 16 au niveau des zones d'appui empêchent le glissement suivant l'axe longitudinal de la cale. Les zones d'appui sont en outre concaves dans l'axe

transverse pour limiter transversalement le déplacement des dents et donc positionner les dites dents.

La liaison démontable entre la cale et la lame permet un démontage rapide et un traitement séparé des éléments constituant le dispositif pour une meilleure stérilisation .

La matière de la cale peut être de nature différente à celle de la lame de sorte que l'on peut mouler chaque pièce individuellement ce qui évite les contraintes de moulage si on fait de la bi-injection.

Elle permet de choisir une cale parmi un jeu de cales et une lame parmi un jeu de lames de tailles différentes.

Chaque pièce est stérilisable.

REVENDICATIONS

1. Dispositif de protection buccale comprenant une cale 2 dentaire destinée à se positionner entre les arcades dentaires d'un coté de la bouche, une lame 3 de protection comportant une première partie 3A repoussant la langue et une seconde partie 3B venant en appui sur l'autre coté de la bouche dans le vestibule ce dispositif étant caractérisé en ce que la seconde partie 3B de la lame 3 est prolongée par un retour 3C pour former un crochet se positionnant à la commissure dcs lèvres .

2. Dispositif de protection selon la revendication 1 caractérisée en ce que la première partie 3A de la lame à une hauteur supérieure à la distance entre le plancher et le palais de la bouche ce qui contraint la lame à se plier et donc augmente le maintien

3. Dispositif de protection buccale selon la revendication 1 caractérisé en ce que la lame 3 est associée à la cale 2 par une liaison souple 100 du type à emboitement rapide avec un jeu facilitant l'orientation de la lame par rapport à la cale.

4. Dispositif de protection buccale selon la revendication 3 caractérisé en ce que la liaison souple 100 comprend une pièce mâle 5 en forme de profilé en Cé, la concavité 6 du Cé étant orientée vers la cale, ce profilé venant s'emboiter dans une cavité 7 complémentaire de la cale 2 avec une ouverture déformable pour le passage en force du Cé.

5. Dispositif de protection buccale selon la revendication 4 caractérisé en ce que la longueur du profilé en Cé permet au dit profilé un déplacement en translation dans la cavité qui l'accueille.

6. Dispositif de protection buccale selon la revendication 4 ou 5 caractérisé en ce que la concavité du profilé en Cé coiffe un bourrelet 8 de la cale 2.

7. Dispositif de protection buccale selon l'une quelconque des revendications précèdentes caractérisé en ce que la cale est déformable élastiquement par compression et présente des zones d'appui opposées pour les dents.

8. Dispositif de protection buccale selon la revendication 7 caractérisé en ce que les zones d'appui des dents présentent des nervures 1b qui empêchent le glissement suivant l'axe longitudinal de la cale et ces zones d'appui sont en outre concaves dans l'axe transverse pour positionner transversalement les dents.

9. Dispositif de protection selon la revendication 1 caractérisé en ce que la première partie 3A de la lame 3 a une forme de feuille allongée qui se rétrécie en s'éloignant de la cale 2 pour se prolonger par une zone de transition 30 qui est courbe et positionne la deuxième partie 3B de la lame 3 dans une direction de l'ordre de 90° par rapport à la première partie 3A et, cette deuxième partie 3B est prolongée par un retour pour former un crochet.

10. Dispositif de protection selon la revendication 9 caractérisé en ce qu'une réduction 30 de matière entre la première partie 3A de la lame et la seconde partie 3B permet un positionnement derrière les molaires et d'obtenir un calage par pincement.

FIG 1

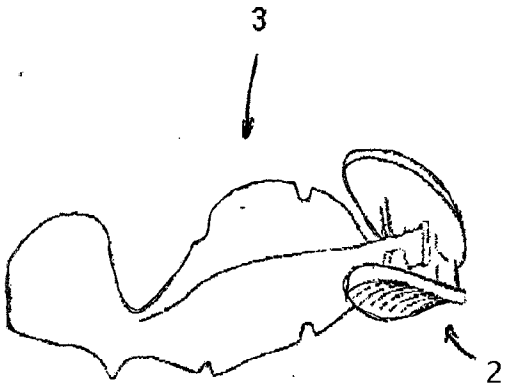

FIG 2

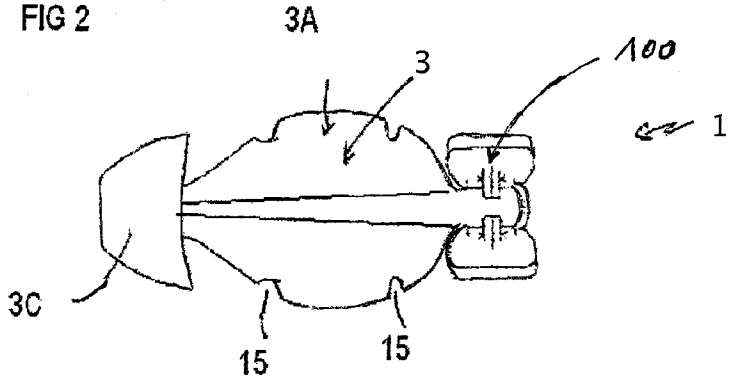

Fig 3

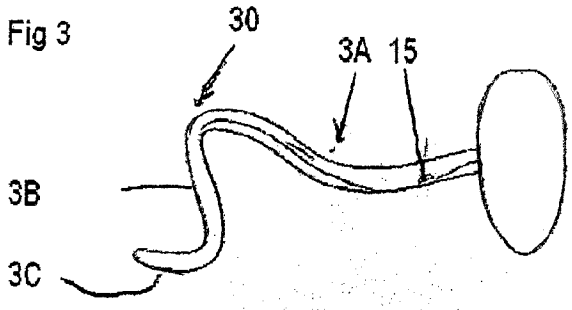

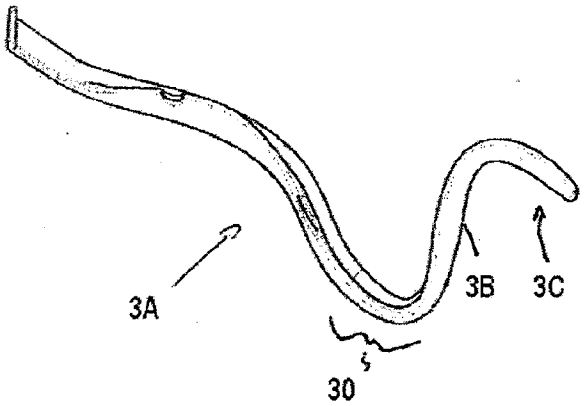

FIG 4

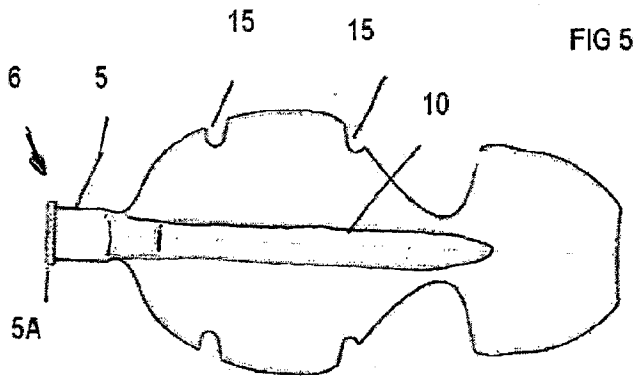

FIG 5

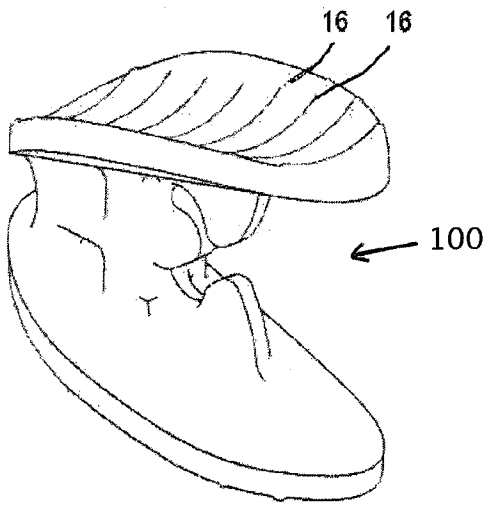

fig 6

FIG 7

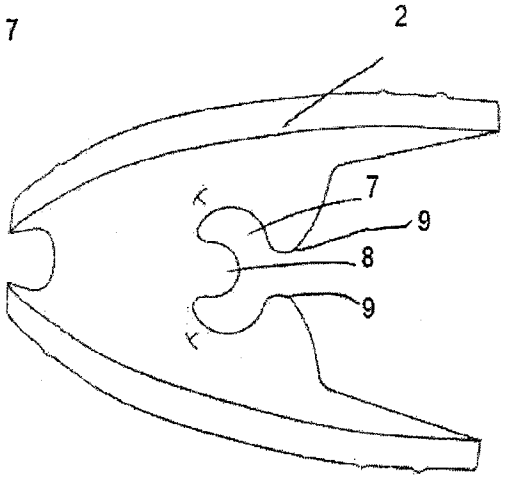

RÉPUBLIQUE FRANÇAISE

INSTITUT NATIONAL DE LA PROPRIÉTÉ INDUSTRIELLE

RAPPORT DE RECHERCHE PRÉLIMINAIRE

établi sur la base des dernières revendications déposées avant le commencement de la recherche

N° d'enregistrement national

FA 767001
FR 1201799

DOCUMENTS CONSIDÉRÉS COMME PERTINENTS		Revendication(s) concernée(s)	Classement attribué à l'invention par l'INPI
Catégorie	Citation du document avec indication, en cas de besoin, des parties pertinentes		
A	US 2003/134253 A1 (HIRSCH JAMES A [US] ET AL) 17 juillet 2003 (2003-07-17) * alinéa [0042] - alinéa [0060]; figures 1-7 *	1-10	A61C5/14
A	US 5 730 599 A (PAK ELIZABETH Y [US]) 24 mars 1998 (1998-03-24) * colonne 4, ligne 57-65; figures 6-9 *	1-10	

DOMAINES TECHNIQUES RECHERCHÉS (IPC)

A61C

Date d'achèvement de la recherche: 11 mars 2013

Examinateur: Kunz, Lukas

CATÉGORIE DES DOCUMENTS CITÉS

X : particulièrement pertinent à lui seul
Y : particulièrement pertinent en combinaison avec un autre document de la même catégorie
A : arrière-plan technologique
O : divulgation non-écrite
P : document intercalaire

T : théorie ou principe à la base de l'invention
E : document de brevet bénéficiant d'une date antérieure à la date de dépôt et qui n'a été publié qu'à cette date de dépôt ou qu'à une date postérieure.
D : cité dans la demande
L : cité pour d'autres raisons

& : membre de la même famille, document correspondant

1

EPO FORM 1503 12.99 (P04C14)

ANNEXE AU RAPPORT DE RECHERCHE PRÉLIMINAIRE
RELATIF A LA DEMANDE DE BREVET FRANÇAIS NO. FR 1201799 FA 767001

La présente annexe indique les membres de la famille de brevets relatifs aux documents brevets cités dans le rapport de recherche préliminaire visé ci-dessus.
Les dits membres sont contenus au fichier informatique de l'Office européen des brevets à la date du 11-03-2013
Les renseignements fournis sont donnés à titre indicatif et n'engagent pas la responsabilité de l'Office européen des brevets, ni de l'Administration française

Document brevet cité au rapport de recherche	Date de publication	Membre(s) de la famille de brevet(s)	Date de publication
US 2003134253 A1	17-07-2003	US 2003134253 A1	17-07-2003
		US 2006084031 A1	20-04-2006
		US 2008090200 A1	17-04-2008
		US 2009246728 A1	01-10-2009
		US 2009246731 A1	01-10-2009
		US 2009298012 A1	03-12-2009
		US 2011143306 A1	16-06-2011
		US 2011207076 A1	25-08-2011
US 5730599 A	24-03-1998	AUCUN	

EPO FORM P0465

PCT WORLD INTELLECTUAL PROPERTY ORGANIZATION
International Bureau

INTERNATIONAL APPLICATION PUBLISHED UNDER THE PATENT COOPERATION TREATY (PCT)

(51) International Patent Classification 7 : A61C 17/06	A1	(11) International Publication Number: WO 00/61031
		(43) International Publication Date: 19 October 2000 (19.10.00)

(21) International Application Number: PCT/US00/10219

(22) International Filing Date: 14 April 2000 (14.04.00)

(30) Priority Data:
09/291,763 14 April 1999 (14.04.99) US

(71)(72) Applicant and Inventor: COSTELLO, William, J. [US/US]; 904 Pebblebrook Lane, East Lansing, MI 48823 (US).

(74) Agents: KNECHTEL, Robert, L. et al.; Knechtel, Demeur & Samlan, Suite 2810, 30 South Wacker Drive, Chicago, IL 60606 (US).

(81) Designated States: AU, BR, CA, CN, CZ, FI, HU, JP, KP, KR, NO, NZ, PL, RU, European patent (AT, BE, CH, CY, DE, DK, ES, FI, FR, GB, GR, IE, IT, LU, MC, NL, PT, SE).

Published
With international search report.

(54) Title: ORAL ISOLATION DEVICE WITH EVACUATION CHAMBERS

(57) Abstract

An essentially U shaped oral isolation device (20) having a tongue arm (50), a buccal arm (52), and a hinge section (54) is provided. The device is an essentially hollow member having an upper suction chamber (46), and a lower suction chamber (48) within the hollows of the oral isolation device (20). Each chamber further comprises suction inlet apertures (62, 64) through which saliva, fluid, aerosol mist, and debris can be evacuated from the operative site; and a suction outlet chamber (56) through which the collected saliva, fluid, and debris are removed from the device. A U-shaped hinge member (54) joins the buccal arm (52), and the tongue arm (50). It has position memory which permits the user to squeeze the arm members toward one another for placement in the mouth; and upon release, the arm members exert opposing positional influence against the tongue, and cheek resulting in retraction of the tongue, the cheek, thereby, creating a clear operative field.

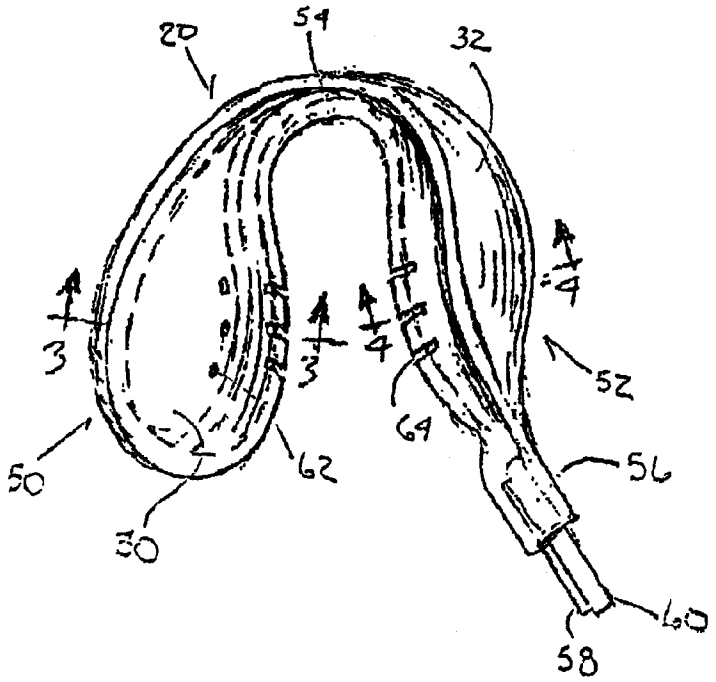

FOR THE PURPOSES OF INFORMATION ONLY

Codes used to identify States party to the PCT on the front pages of pamphlets publishing international applications under the PCT.

AL	Albania	**ES**	Spain	**LS**	Lesotho	**SI**	Slovenia
AM	Armenia	**FI**	Finland	**LT**	Lithuania	**SK**	Slovakia
AT	Austria	**FR**	France	**LU**	Luxembourg	**SN**	Senegal
AU	Australia	**GA**	Gabon	**LV**	Latvia	**SZ**	Swaziland
AZ	Azerbaijan	**GB**	United Kingdom	**MC**	Monaco	**TD**	Chad
BA	Bosnia and Herzegovina	**GE**	Georgia	**MD**	Republic of Moldova	**TG**	Togo
BB	Barbados	**GH**	Ghana	**MG**	Madagascar	**TJ**	Tajikistan
BE	Belgium	**GN**	Guinea	**MK**	The former Yugoslav Republic of Macedonia	**TM**	Turkmenistan
BF	Burkina Faso	**GR**	Greece			**TR**	Turkey
BG	Bulgaria	**HU**	Hungary	**ML**	Mali	**TT**	Trinidad and Tobago
BJ	Benin	**IE**	Ireland	**MN**	Mongolia	**UA**	Ukraine
BR	Brazil	**IL**	Israel	**MR**	Mauritania	**UG**	Uganda
BY	Belarus	**IS**	Iceland	**MW**	Malawi	**US**	United States of America
CA	Canada	**IT**	Italy	**MX**	Mexico	**UZ**	Uzbekistan
CF	Central African Republic	**JP**	Japan	**NE**	Niger	**VN**	Viet Nam
CG	Congo	**KE**	Kenya	**NL**	Netherlands	**YU**	Yugoslavia
CH	Switzerland	**KG**	Kyrgyzstan	**NO**	Norway	**ZW**	Zimbabwe
CI	Côte d'Ivoire	**KP**	Democratic People's Republic of Korea	**NZ**	New Zealand		
CM	Cameroon			**PL**	Poland		
CN	China	**KR**	Republic of Korea	**PT**	Portugal		
CU	Cuba	**KZ**	Kazakstan	**RO**	Romania		
CZ	Czech Republic	**LC**	Saint Lucia	**RU**	Russian Federation		
DE	Germany	**LI**	Liechtenstein	**SD**	Sudan		
DK	Denmark	**LK**	Sri Lanka	**SE**	Sweden		
EE	Estonia	**LR**	Liberia	**SG**	Singapore		

Oral Isolation Device with Evacuation Chambers

I. TECHNICAL FIELD

The present invention relates to oral isolation devices for use in dental procedures and, more particularly, to an oral isolation device which optimizes the size of the operating field, provides unobstructed cheek and tongue retraction, and further includes fluid, aerosol, and debris evacuation chambers adapted to attach to suction devices, thereby keeping the operative field dry without causing tissue damage to surrounding tissue.

II. BACKGROUND OF THE INVENTION AND PRIOR ART

During oral procedures, the dentist encounters many unique surgical difficulties. For instance, the oral cavity is a small space within which to work; it is bacteria laden and rich in blood supply; there is saliva, debris and applied fluid and aerosol buildup; and, finally, many patients have difficulty in keeping their tongues from entering the operative field.

Over the years, many appliances have been devised to assist in maintaining a clear and clean operative field. One example is seen in U. S. Patent No. 1042133 to Marshall. This patent discloses a device for working on a patient's lower front teeth. This device includes a saliva ejector and a lower lip deflector and consists of a hollow double-bow tube having an exterior portion and an interior portion. The interior portion passes over

the lower front teeth and rests below the tongue. The exterior portion has a lower lip deflector which hooks over the patient's lower lip exposing the front lower teeth. While this device is suitable for working on the front lower teeth, it has no application for use with the upper teeth or on lower teeth other than the front teeth. An additional shortcoming of this device is that it only provides for evacuation of fluid collecting near the lingual mucosa at the base of the tongue.

Two more examples are seen in U. S. Patent No. 1401646 to Roan (a saliva ejector for use in dental procedures involving the lower jaw; it consists of two perforated tubular portions, one of which is disposed on the lingual side of the alveolar ridge and the other on the buccal side of the alveolar ridge. Optionally included is a tongue deflection plate) and U. S. Patent No. 2830371 to Dahl (a variation of a hollow tube saliva ejector system having a tongue holder; this device further including a chin plate). While these two devices offer certain advances, they are not without shortcomings. First, they are satisfactory for use only in lower jaw procedures. They have no application for upper jaw procedures. Second, while the devices offer some tongue retraction capabilities, they do so by tongue depression. Tongue depression can be quite uncomfortable for the patient and is only a marginally effective technique since a patient's tongue can slip from beneath the depressor. Third, both devices only provide for evacuation of pooled saliva and fluid, with Dahl doing so only on the buccal side of the gums. Finally, neither device permits retraction of the cheeks. Thus, the devices do not significantly increase the size of the

operating field.

Another example is seen in U. S. Patent No. 3090122 to Erickson which teaches a dental appliance that provides for the collection and drainage of liquid and debris, partial retraction of an adjacent cheek and depression of the tongue, and a bite support to maintain the device's position and the patient's mouth open. A shortcoming of this device is that it requires the patient bite down on the device to hold it into place. This can lead to patient discomfort and movement of the device. A further shortcoming of this device is the placement system may cause obstruction of the operative field. A further shortcoming of this device is that it only retracts a small portion of the tongue and provides essentially no retraction of the cheek, thereby only slightly increasing the operative field. A final shortcoming of this device is that it collects only collected fluid and debris.

A further example is seen in U. S. Patent No. 4215984 to Moss. This patent teaches a mouth prop consisting of upper and lower U-shaped sections, the sections having apertures for extracting fluid and debris, cheek deflectors, a tongue depressor, and upper and lower lip deflectors. While this device is an improvement in the art field, it is not without its shortcomings.

A first shortcoming is that the device provides for tongue depression instead of retraction; the drawback of which is discussed above. A second shortcoming is that the device fits around the front of a patient's mouth, thereby creating a potential obstruction to the operating field. Another shortcoming of the device is that while providing for cheek

retraction, it does so only passively, thus it only minimally increases the size of the operating field. A last but significant shortcoming of the device is that while providing for fluid and debris evacuation at not only the mandibular level but also the maxillary level, it does so at only one suction volume. Thus, there is no ability to adjust suction flow volumes to maintain the optimum flow for a given area.

Examples of other prior art are found in U. S. Patent Nos. 4259067, 4260378, 4632093, 4992046, 5037298, 5232362, and 5460524.

While the prior art provides certain advances in isolating oral tissue and evacuating saliva from an operative field, the prior art suffers five general shortcomings. First, while increasing the size of the operative field somewhat, none of the prior art maximizes the size of the operative field. The prior art generally provides only discomfort causing tongue depression and, at best, minimal cheek retraction. Second, the prior art, in some fashion or another, obstructs the operative field in which a dentist must work. Third, the prior art is all designed to be fixed in shape. It forces the patient's mouth to conform to it as opposed to the device conforming to the patient's mouth. Fourth, the devices which provide for saliva evacuation generally do so only in a passive sense. The devices are designed to fit on either the lingual or buccal mucosa near the base of the alveolar ridge. These designs only enable the devices to extract saliva and debris which have, through gravitational flow, settled in the bottom of the mouth. This is often ineffective inasmuch as a comfortable operating angle requires that a patient's head be tilted somewhat

backwards. Thus, the saliva and debris do not always congregate or collect in a position convenient for evacuation by the device.

Fifth, the prior art that does provide an evacuation means other than in the floor of the mouth, does so only at the same suction volume as that of the lower jaw saliva evacuation. This invariably leads to a situation in which the misting aerosol spray, which keeps drill bits and teeth cool and clears away debris, is not efficiently evacuated from the operating field. If the suction flow rate is increased sufficiently to remove the misting spray, the suction apparatus positioned near the base of the mouth will create a seal with surrounding tissue, resulting in tissue damage and preventing removal of collected saliva and debris. If, on the other hand, suction flow is decreased to a level in which accumulated fluid can be extracted, the suction flow rate is ineffective at evacuating misting aerosol spray.

There is need, therefore, for an oral isolation device which provides an optimal size to the operative field by retracting both the tongue and the cheek adjacent to preselected oral tissue, maintains a clear operative field by creating no obstructions, and enables efficient simultaneous evacuation of saliva, aerosol, and debris from the base of the mouth and from the oral cavity.

III. OBJECTS OF THE INVENTION

It is an object of the present invention to provide an oral isolation device which optimally retracts the tongue and adjacent cheek away from teeth and surrounding oral tissue on which work is to be performed.

It is a further object of the present invention to provide such an oral isolation device which has a spring action which enables the device to self-adjust to the patient's mouth.

It is a further object of the present invention to provide such an oral isolation device which minimizes operative field obstruction.

It is another object of the present invention to provide such an oral isolation device that is essentially hollow and contains chambers having a plurality of suction inlet apertures and a suction outlet aperture for each chamber, the suction outlet apertures being adapted to be removably affixed to suction devices, thereby permitting each chamber to be individually adjusted as to suction flow.

It is yet a further object of the present invention to provide such an oral isolation device which is easy to use, causes no or minimal patient discomfort, and relieves the dentist or dental assistant from the need to reposition suctioning devices during a dental procedure.

IV. SUMMARY OF THE INVENTION

The above objects of the invention are provided for in an improved oral isolation device. According to the invention, the oral isolation device is essentially a U-shaped member having a tongue arm, a buccal arm, and a hinge section. The device is an essentially hollow member preferably made of two complementary essentially U-shaped halves. In the preferred embodiment, when the complementary halves are joined, an upper

suction chamber and a lower suction chamber are created within the hollows of the oral isolation device. Each chamber further comprising suction inlet apertures through which saliva, fluid, and debris can be evacuated from the operative site, and a suction outlet chamber through which the collected saliva, fluid, and debris are removed from the device.

The arms of the oral isolation device are preferably ovoid in shape, with one arm being disposed against the tongue, and the opposite arm being disposed against the buccal mucosa. The arm disposed against the tongue is concave with respect to the tongue, and the arm disposed against the buccal mucosa is convex with respect to the buccal mucosa. The two arms are sized such that they create a barrier to the tongue and cheek entering the operative field, and are of a height sufficient to prevent the patient's mouth from closing.

A U-shaped hinge member joins the buccal arm and the tongue arm. The hinge member is smaller in height than the arm members. It has position memory which permits the user to pinch the arm members toward one another for placement in the mouth and upon release, the arm members directional induce the tongue and cheek away from the operative field.

Also provided is a method of use for the device in which the tongue arm and buccal arms are forced toward one another. The hinged member is then inserted into the patient's oral cavity and placed around the rearmost tooth, and preferably, posterior to the alveolar ridge, of that side of the mouth on which work is to be performed. Upon proper

placement of the device, the user releases the pressure on the arms of the device, the arms thereby exerting retraction pressure to the cheek and tongue, resulting in retraction of the tongue and cheek, thereby creating a clear operative field.

A reduced pressure high volume device is then attached to the upper chamber suction outlet and a low pressure reduced volume device is attached to the lower chamber outlet.

In an alternative embodiment, the device is a solid member containing no chambers and is used for cheek and tongue retraction during dental procedures wherein saliva and debris evacuation is not required.

V. BRIEF DESCRIPTION OF THE DRAWINGS

Figure 1 depicts an top view of the inventive device.

Figure 2 depicts an exploded version of the device illustrating the two major sections which comprise the device as viewed from the side.

Figure 3 depicts a cross section view of the tongue retraction arm of the device.

Figure 4 depicts a cross section of the cheek retraction arm of the device.

Figure 5 depicts a lateral perspective view of the anterior of the device.

Figure 6 illustrates placement of the inventive device in a patient's mouth.

Figure 7 depicts an alternate embodiment of the inventive device wherein the device is a solid member having no suction outlet arm.

VI. DESCRIPTION OF THE PREFERRED EMBODIMENT

The following description of the preferred embodiment will be better understood with reference to the appended drawings. As those skilled in the art understand, the oral cavity is a difficult area within which to perform procedures. The dentist and patient are best served when the size of the operative field is optimized. The primary goal is to isolate the area in which a procedure is to be performed. A secondary goal is to keep that area as free as possible from collected saliva, fluid, aerosol, and debris. The present invention addresses those problems and concerns in an improved Oral Isolation Device (device) 20.

Turning to Figure 1, a top view of device 20 is depicted. Turning to Figure 2, it can be seen that in its preferred embodiment, device 20 is comprised of two sections,

outer section 22 and inner section 24. While the preferred embodiment envisions an outer section and an inner section, this is done for manufacturing purposes only. The scope and spirit of the inventive device can be fully realized through other means such as, but not limited to, an upper half and a lower half. Outer section 22 further comprises outer wall 26 and inner side 28. Inner section 24 further comprises inner wall 30 and outer side 32. The perimeter 34 of outer section 22 curves slightly toward inner side 28 while the perimeter 34 of inner section 24 curves toward outer side 32. Thus, when outer section 22 and inner section 24 are coformed together, they form a hollow space within inner side 28 and outer side 32. Turning to Figure 1, it can be seen that divider 38 extends along the horizontal length of device 20. As depicted in Figure 2, divider 38 is shown positioned on inner side 28 of outer section 22. While divider 38 is shown in such a position for explanatory purposes, it is to be understood that divider 30 could be located also on outer side 32. Also, while divider 38 is shown in the drawings as essentially a uniform line, it is to be further understood that divider 38 may also be wider, creating a smaller space between divider 38 and edge 40. Divider 38 may also be formed into device 20 after outer section 22 and inner section 24 are coformed together.

During the manufacturing process, outer section 22 and inner section 24 may be coformed together through any conventional means such as ultrasonic welding. Other molding means such as thermal forming can also be used to manufacture the device. However, due to the complexity of creating an essentially hollow U-shaped device, the

inventor found that welding two complementary sections to one another is preferred. Device 20 is preferably made of a semi-rigid material; plastic is ideal.

Turning to Figure 3, it can be seen that once outer section 22 and inner section 24 are coformed together, an upper seam 42 and lower seam 44 create an edge 40 (Figure 1). As also seen in Figures 3 and 4, divider 38 defines an upper chamber 46 and a lower chamber 48. Thus, three dimensional space is created: a vertical space extending from lower seam 42 and upper seam 44, a front-to-back created by the U-shaped configuration of device 20, and a horizontal space created within the side wall. Thus, a hollow space defining the chambers is created.

Returning to Figure 1, the completed apparatus can be broken down into essentially three sections; a tongue retraction arm 50, a cheek retraction arm 52, and a hinge member 54. As can be seen in Figure 2, tongue retraction arm 50 and cheek retraction arm 52 are essentially ovoid in shape. Cheek retraction arm 52 further includes suction outlet member 56. At its free end, suction outlet member 56 further divides into low volume suction arm 58 and high volume suction arm 60. As seen in Figure 2, low volume suction arm 58 and high volume suction arm 60 continue at separate passageways 62, 64 through the interior of suction outlet member 56. Low volume suction arm 58 terminates in lower chamber 48 and high volume suction arm 60 terminates in upper chamber 46.

As seen in Figure 1, a posterior view of device 20, tongue retention arm 50 is concave with respect to the tongue and as seen in Figures 3 and 4, cheek retraction arm 52

is convex with respect to the cheek. The inventor found that these geometric configurations optimize the retraction ability of tongue retractor arm 50 in retracting the tongue and cheek retraction arm 52 in retracting the cheek to create an optimum sized operating field while at the same time creating a comfortable fit for the patient.

Tongue retraction arm 50 and cheek retraction arm 52 are preferably ovoid in shape. This shape also adds to the retraction and comfort attributes of device 20. It is also preferable that tongue retraction arm 50 and cheek retraction arm 52 are of such a vertical size as to encourage a patient to keep his mouth open during a dental procedure.

As described above, in the preferred embodiment, device 20 is manufactured as a two piece device. For purposes of the preferred embodiment, however, the device is broken down into the tongue retraction arm 50, cheek retraction arm 52, and hinge 54. It is to be understood that while hinge 54 is described as a separate section of the device and can be viewed as a separate section in use of the device, in the preferred embodiment, hinge 54 is part and parcel of the overall apparatus. As can be seen in Figures 1, 3, and 4, hinge 54 is of a height less than that of tongue retraction arm 50 and cheek retraction arm 52. This is beneficial in that it makes hinge 54 easier to position and more comfortable for the patient than if hinge 54 were the same height as the retraction arms. Hinge 54 has position memory, which is beneficial in placement of the device 20, as more fully described below. Upper chamber 46 and lower chamber 48 continue unobstructed through hinge 54 from cheek retraction arm 52 to tongue retraction arm 50.

As can be seen in Figures 1 and 2, inner section 24 also includes a plurality of ports 62 in upper chamber 46 and a plurality of slots 64 in lower chamber 48. While the drawings depict the plurality of ports 62 near the upper edge 64 of divider 38, the placement in this area is not critical. Likewise, the depiction of slot 64 near edge 40 of lower chamber 48 is not critical. As described more fully below in use of device 20, ports 62 should be positioned so that they create optimum suctioning power for the removal of aerosol mist and debris floating within the oral cavity during a dental procedure. Slots 64 should be positioned in an area of lower chamber 48 such that they are most effective in evacuating accumulated saliva, fluid, and debris from the lower portion of the jaw during a dental procedure.

As those skilled in the arts will quickly realize, however, port 62 should be placed along the plane of occlusion since this placement optimizes the area in which aerosol mist and floating debris are found and also is in the field of vision for a dentist during procedures.

To use device 20, the dentist or dental assistant grasps device 20 so that hinge 54 faces the posterior of the oral cavity and tongue retraction arm 50 and cheek retraction arm 52 face the anterior of the oral cavity. The dentist or dental assistant then applies compression pressure to tongue retraction arm 50 and cheek retraction arm 52, squeezing the two arms close to one another. Device 20 is then placed in a patient's mouth so that hinge 54 is inserted first and is fitted around the rear most teeth, and preferably around the posterior edge of the alveolar ridge. When in proper position, hinge 54 will be behind the

rear most tooth, cheek retraction arm 52 will be on the buccal side of the alveolar ridge, and tongue retraction arm 50 will be on the lingual side of the alveolar ridge. Once device 20 is placed in proper anterior - posterior position, the dentist or dental assistant then releases the compression on tongue retraction arm 50 and cheek retraction arm 52. Upon release of the compression pressure, the position memory of hinge 54 causes the tongue retraction arm and cheek retraction arm to move in opposing directions, the tongue retraction arm thereby retracting the tongue and the cheek retraction arm thereby retracting the adjacent cheek. Placement of device 20 can be visualized in Figure 6. As also seen in Figure 6, the only portion of device 20 that protrudes from the patient's mouth is suction outlet member 56 which extends in a downward position near the most lateral side of the patient's mouth.

High volume suction arm 60 is removably attached to a high volume suction apparatus and low volume suction arm 58 is removably attached to a low volume suction apparatus. In this manner, a high volume of suction can be applied to the upper chamber, thus resulting in effective removal of aerosol mist and debris free-floating in the oral cavity. At the same time, low volume of suction pressure can be applied to the lower chamber, thus effectively removing collected saliva, fluid, and debris from the lingual and buccal base of the mouth without causing damage to the surrounding mucosa.

In an alternate embodiment, as depicted in Figure 7, the inventor contemplates use of the device without the necessity of attaching it to suction apparati. In such use, the

device as described above can be used without attaching high volume suction arm 60 and low volume suction arm 58 to a suction apparatus. However, the inventor contemplates that the device can be made so that it is a solid or hollow member having no internal chambers, ports, slots or suction outlet member. In this alternative embodiment, device 20 is positioned in the same manner as describe above, with the only exception being that suction outlet member 56 will not be extending from the mouth and, obviously, no suction apparatus being applied to device 20.

The above description of the preferred embodiment is for illustration purposes only. As those skilled in he arts will quickly realize, there are many variations of the inventive device which are possible yet remain within the scope and spirit of the invention. Accordingly, the inventive device is only to be limited by the appended Claims.

VII. CLAIMS

What is claimed:

1. An oral isolation device for use in dental procedures comprising:

an essentially U-shaped retraction member, the retraction member further being an essentially hollow member having an inner wall and an outer wall, and further including a divider within the hollow area, the divider defining an upper chamber and a lower chamber, the upper chamber having a first suction outlet for removably attaching to a suction device and a plurality of ports extending through the inner wall, the lower chamber having a second suction outlet for removably attaching to a suction device and a plurality of apertures extending through the inner wall.

2. The oral isolation device of Claim 1 further including means for retracting a cheek.

3. The oral isolation device of Claim 2 wherein the means for retracting the cheek is essentially oval in shape.

4. The oral isolation device of Claim 2 wherein the means for retracting the cheek is convex in relation to the cheek.

5. The oral isolation device of Claim 1 further including means to retract the tongue.

6. The oral isolation device of Claim 5 wherein the means for retracting the tongue is generally oval in shape.

7. The oral isolation device of Claim 5 wherein the means for retracting the tongue is generally concave with respect to the tongue.

8. An essentially U-shaped retraction device for retracting a cheek and tongue away from teeth comprising an inner portion and an outer portion, the inner portion and outer portion defining an essentially hollow area, the hollow area further characterized by including at least one chamber, a passageway connecting the at least one chamber to a suction outlet, and a plurality of ports extending through the inner portion.

9. The essentially U-shaped device of Claim 8 further including means for retracting a cheek.

10. The essentially U-shaped device of Claim 8 wherein the means for retracting the cheek is essentially ovoid in shape.

11. The essentially U-shaped device of Claim 8 wherein the means for retracting the cheek is convex in relation to the cheek.

12. The essentially U-shaped device of Claim 8 further including means to retract the tongue.

13. The essentially U-shaped device of Claim 12 wherein the means for retracting the tongue is generally ovoid in shape.

14. The essentially U-shaped device of Claim 12 wherein the means for retracting the tongue is generally concave with respect to the tongue.

15. An oral isolation device for use in dental procedures to isolate preselected oral tissue by retracting a cheek and tongue adjacent to the preselected oral tissue comprising an essentially U-shaped member having a cheek retraction portion, a tongue retraction portion, and a hinge member, the cheek retraction portion and tongue retraction portion be co-joined to each other by the hinge member.

16. The oral isolation device of Claim 15 further including means for retracting a cheek.

17. The oral isolation device of Claim 16 wherein the means for retracting the cheek is essentially ovoid in shape.

18. The oral isolation device of Claim 16 wherein the means for retracting the cheek is convex in relation to the cheek.

19. The oral isolation device of Claim 15 further including means to retract the tongue.

20. The oral isolation device of Claim 19 wherein the means for retracting the tongue is generally ovoid in shape.

21. The oral isolation device of Claim 19 wherein the means for retracting the tongue is generally concave with respect to the tongue.

22. The oral isolation device of Claim 15 wherein the hinge member is of a height less than the cheek retraction portion and the tongue retraction portion.

23. The oral isolation device of Claim 15 wherein the hinge has position memory.

24. An oral isolation device for dental procedures which isolates preselected teeth by retracting a patient's tongue and cheek adjacent to the preselected teeth comprising:

a first wall member for retracting the tongue;

a second wall member for retracting the cheek;

a substantially U-shaped center member connecting the first wall portion to the second wall portion, the essentially U-shaped center member having a memory which causes opposing lateral pressure on the first wall member and the second wall member;

an upper vacuum chamber extending within the first wall member, second wall member, and U-shaped center member, the upper vacuum chamber further having an inner wall portion, an outer wall portion, and a free end, the inner wall portion further including a plurality of apertures and the free end further including a vacuum outlet member;

a lower vacuum chamber extending within the first member, second wall member, and U-shaped center member, the lower vacuum chamber further including an inner portion, an outer portion, and a free end, the inner portion further containing a plurality of apertures and the free end containing a vacuum outer member; and

means for supplying a vacuum to the upper chamber and the lower vacuum chamber.

25. The apparatus according to Claim 24 wherein the first wall member extends from the front of the mouth to the rear of the mouth and is substantially oval in shape along its vertical axis, the first wall member inner portion and outer portion being concave with respect to the cheek.

26. The apparatus according to Claim 24 wherein the second wall member extends from the front of the mouth to the rear of the mouth and is substantially oval in shape along its vertical axis, the first wall member inner portion and outer portion being convex with respect to the cheek.

27. A method of creating a dental operating field comprising the steps of:

exerting squeezing pressure upon an oral isolation device having a tongue retraction portion and a cheek retraction portion, the tongue retraction portion and cheek retraction portion each having a free end and a hinged end, the tongue retraction portion and cheek retraction portion hinged to one another at a hinge, thereby forming an essentially U-shaped device, so that the tongue retraction portion and cheek retraction portion move toward one another;

inserting the oral isolation device into a patient's mouth in such a manner that the hinge is inserted into the patient's mouth before the free ends of the tongue retraction portion and cheek portion retraction;

positioning the hinge around the posterior teeth on one side of the patient's' mouth; and

releasing the exertional force on the tongue retraction portion and the cheek retraction portion thereby retracting the tongue with the tongue retraction portion and the cheek with the cheek retraction portion.

28. A method of creating a dental operating field comprising the steps of:

exerting a squeezing closing force upon an oral isolation device having a tongue retraction portion and a cheek retraction portion, the tongue retraction portion and cheek retraction portion each having a free end and a hinged end, the tongue retraction portion and cheek retraction portion hinged to one another at a hinge, thereby forming an essentially U-shaped device, the oral isolation device further being characterized by being an essentially hollow member having an upper chamber and a lower chamber, the upper chamber further comprising a plurality of ports and a suction outlet member, and the lower chamber further comprising a plurality of apertures and a second suction outlet member;

inserting the oral isolation device into a patient's mouth in such a manner that the hinge is inserted into the patient's mouth before the free ends of the tongue retraction portion and cheek portion retraction;

positioning the hinge around the posterior teeth on one side of the patient's' mouth;

releasing the exertional force on the tongue retraction portion and the cheek retraction portion thereby retracting the tongue with the tongue retraction portion and the cheek with the cheek retraction portion; and,

attaching the upper chamber suction outlet to a vacuum device and the lower chamber second suction outlet member to a second suction device.

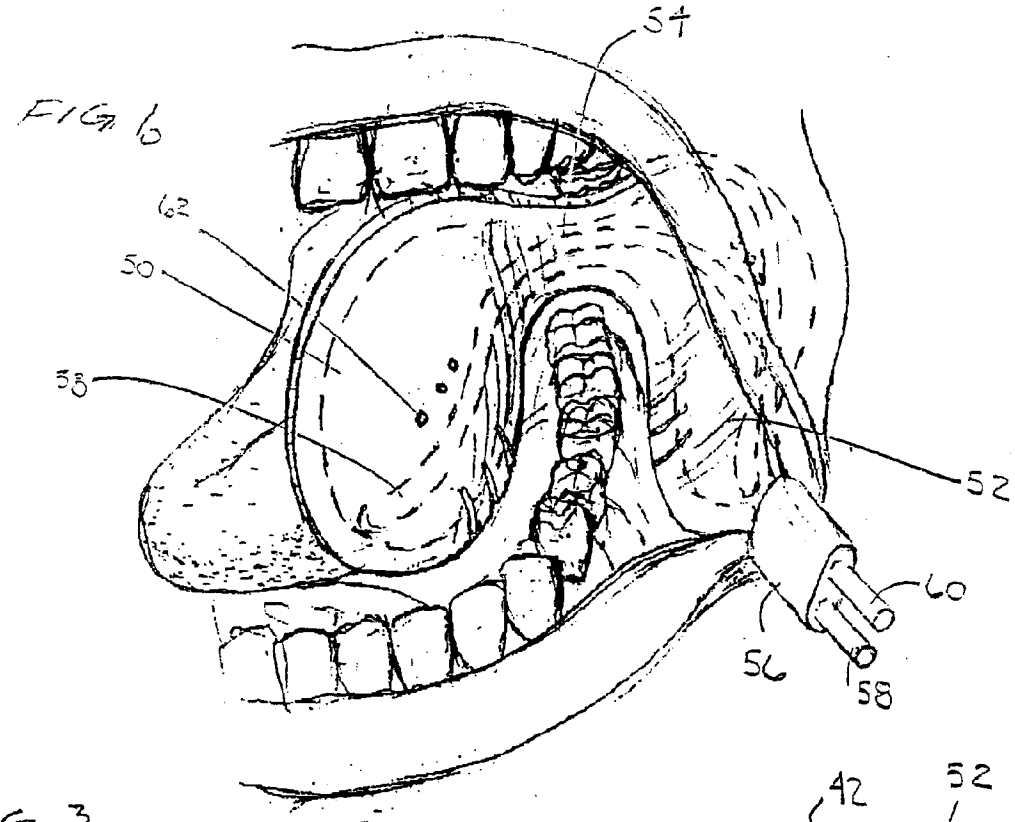

FIG. 6

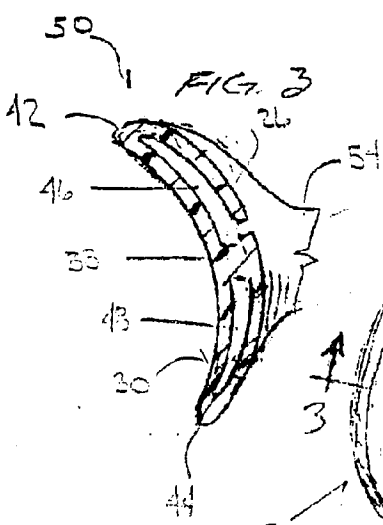

FIG. 3

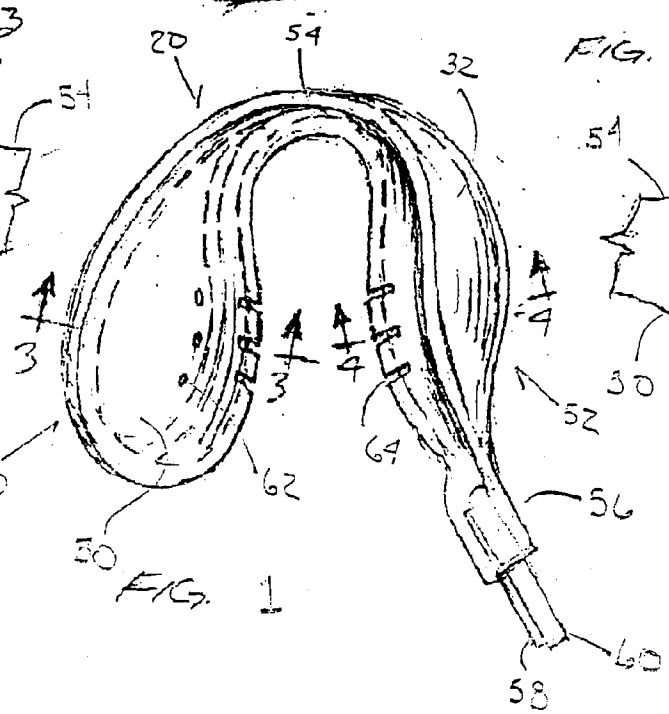

FIG. 1

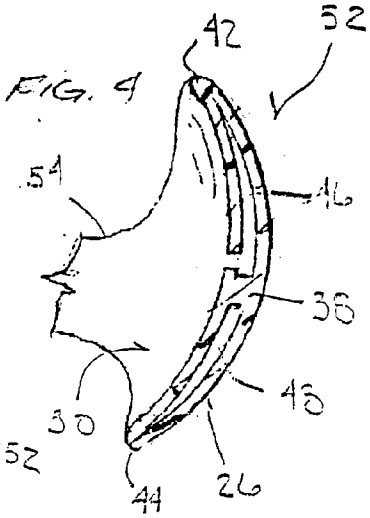

FIG. 4

FIG. 2

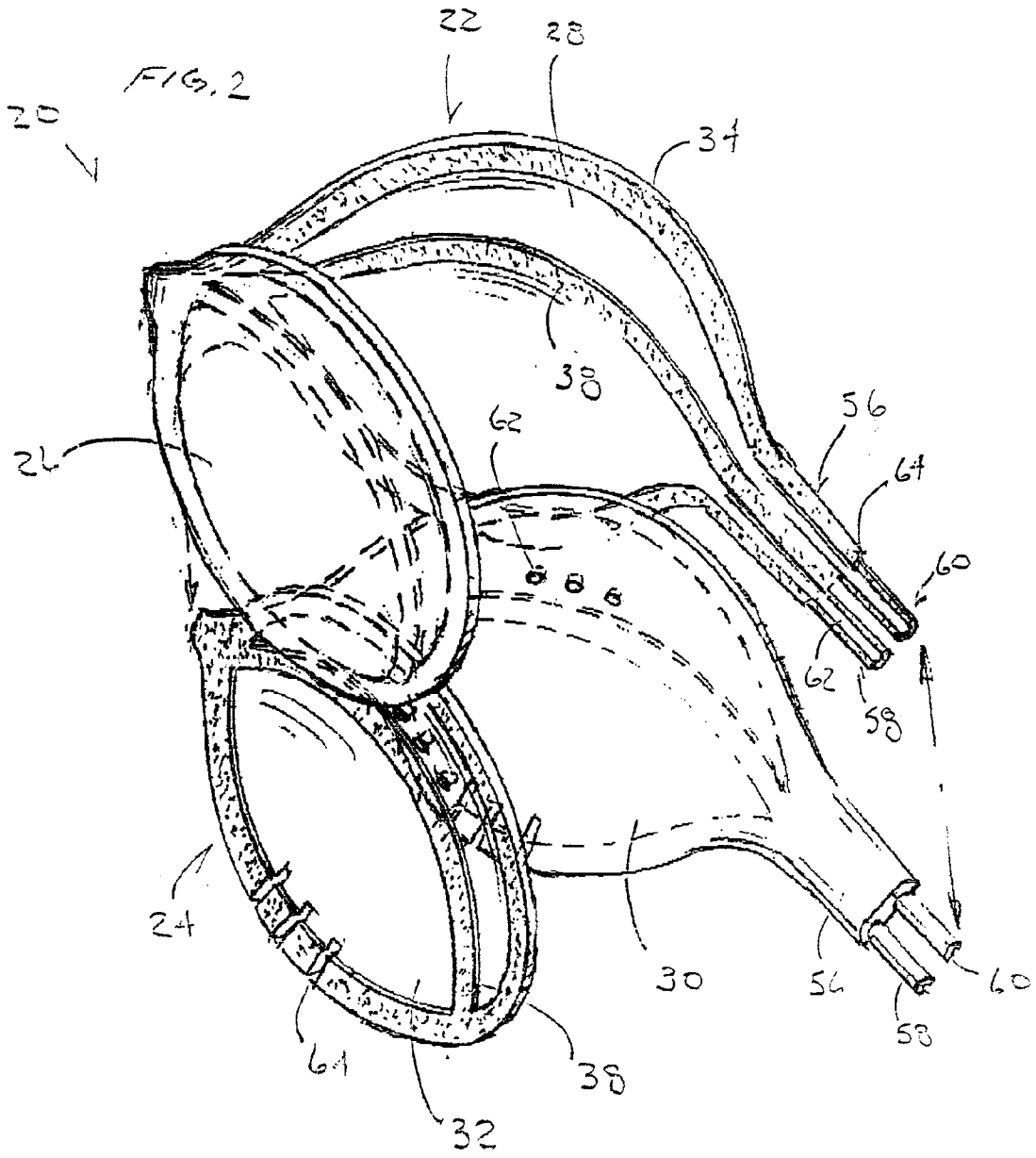

INTERNATIONAL SEARCH REPORT

International application No.
PCT/US00/10219

A. CLASSIFICATION OF SUBJECT MATTER

IPC(7) :A61C 17/06
US CL :433/93

According to International Patent Classification (IPC) or to both national classification and IPC

B. FIELDS SEARCHED

Minimum documentation searched (classification system followed by classification symbols)

U.S. : 433/91, 93, 94, 136, 140; 600/206, 238

Documentation searched other than minimum documentation to the extent that such documents are included in the fields searched

Electronic data base consulted during the international search (name of data base and, where practicable, search terms used)

C. DOCUMENTS CONSIDERED TO BE RELEVANT

Category*	Citation of document, with indication, where appropriate, of the relevant passages	Relevant to claim No.
X --- Y	US 4,053,984 A (MOSS) 18 October 1977,entire document.	8, 9, 11-14 --- 10
X --- Y	US 590,460 A (MEHLIG) 21 September 1897, entire document.	15-23 --- 10

☐ Further documents are listed in the continuation of Box C. ☐ See patent family annex.

* Special categories of cited documents:

"A" document defining the general state of the art which is not considered to be of particular relevance

"E" earlier document published on or after the international filing date

"L" document which may throw doubts on priority claim(s) or which is cited to establish the publication date of another citation or other special reason (as specified)

"O" document referring to an oral disclosure, use, exhibition or other means

"P" document published prior to the international filing date but later than the priority date claimed

"T" later document published after the international filing date or priority date and not in conflict with the application but cited to understand the principle or theory underlying the invention

"X" document of particular relevance; the claimed invention cannot be considered novel or cannot be considered to involve an inventive step when the document is taken alone

"Y" document of particular relevance; the claimed invention cannot be considered to involve an inventive step when the document is combined with one or more other such documents, such combination being obvious to a person skilled in the art

"&" document member of the same patent family

Date of the actual completion of the international search	Date of mailing of the international search report
12 JUNE 2000	12 JUL 2000
Name and mailing address of the ISA/US Commissioner of Patents and Trademarks Box PCT Washington, D.C. 20231 Facsimile No. (703) 305-3230	Authorized officer MELBA BUMGARNER Telephone No. (703) 305-0740

Form PCT/ISA/210 (second sheet) (July 1998)★

Electronic Acknowledgement Receipt

EFS ID:	45121607
Application Number:	14228057
International Application Number:	
Confirmation Number:	1983
Title of Invention:	INTRAORAL DEVICE WITH SLIT
First Named Inventor/Applicant Name:	Thien Nguyen
Customer Number:	138718
Filer:	TamThanh Thi Pham/Lea Fong
Filer Authorized By:	TamThanh Thi Pham
Attorney Docket Number:	INCEP-001COD
Receipt Date:	02-MAR-2022
Filing Date:	27-MAR-2014
Time Stamp:	20:31:06
Application Type:	Utility under 35 USC 111(a)

Payment information:

Submitted with Payment	no

File Listing:

Document Number	Document Description	File Name	File Size(Bytes)/ Message Digest	Multi Part /.zip	Pages (if appl.)
1	Transmittal Letter	INCEP-001COD_IDS_Statement_3-2-22.pdf	98102 7d92f7d6bbaa3c5115d65f1803be252f1993a5b0	no	2

Warnings:

Information:					
2	Information Disclosure Statement (IDS) Form (SB08)	084892-514250_0_IDS_20220301201638.pdf	1065988 5ae1a7242265530db01b8efbc7f3293b6fb1856a	no	5
Warnings:					
Information:					
3	Foreign Reference	KR100654392B1_EFS.pdf	308588 695c1b7cb7885e1ababae24d56dc0e23121bf896	no	8
Warnings:					
Information:					
4	Foreign Reference	WO0042939A1_EFS.pdf	867620 ea10f7b441634be7d670b43ef443a31e14c44ed3	no	22
Warnings:					
Information:					
5	Foreign Reference	WO2018126150A1_EFS.pdf	1411232 d3d2a730bda498c9ccb89eed816f3cba99526c8d	no	30
Warnings:					
Information:					
6	Non Patent Literature	INCEP-001COC_Final_OA_1-3-22.pdf	471409 882f32eaf5d37d33f6af9b940c0a18eba7ab577c	no	12
Warnings:					
Information:					
7	Non Patent Literature	INCEP-001COE_Non-Final_OA-12-8-21.pdf	509169 653623b02c004f728caae0c11f3cbe3d3a73278a	no	13
Warnings:					
Information:					
8	Non Patent Literature	INCEP-005_Non-Final_OA-12-3-21.pdf	460299 54d9f49e28ff13191d5f1523148ad19045449917	no	13
Warnings:					
Information:					

9	Foreign Reference	FR_2992161.pdf	406182 5e8c9e49500d3eac1502a6a9b5066cb474ebd764	no	14
Warnings:					
Information:					
10	Foreign Reference	WO_0061031.pdf	846387 fd2ea6f86439e1714549700efa0bcb7fa2d8e484	no	29
Warnings:					
Information:					
			Total Files Size (in bytes):	6444976	

This Acknowledgement Receipt evidences receipt on the noted date by the USPTO of the indicated documents, characterized by the applicant, and including page counts, where applicable. It serves as evidence of receipt similar to a Post Card, as described in MPEP 503.

New Applications Under 35 U.S.C. 111

If a new application is being filed and the application includes the necessary components for a filing date (see 37 CFR 1.53(b)-(d) and MPEP 506), a Filing Receipt (37 CFR 1.54) will be issued in due course and the date shown on this Acknowledgement Receipt will establish the filing date of the application.

National Stage of an International Application under 35 U.S.C. 371

If a timely submission to enter the national stage of an international application is compliant with the conditions of 35 U.S.C. 371 and other applicable requirements a Form PCT/DO/EO/903 indicating acceptance of the application as a national stage submission under 35 U.S.C. 371 will be issued in addition to the Filing Receipt, in due course.

New International Application Filed with the USPTO as a Receiving Office

If a new international application is being filed and the international application includes the necessary components for an international filing date (see PCT Article 11 and MPEP 1810), a Notification of the International Application Number and of the International Filing Date (Form PCT/RO/105) will be issued in due course, subject to prescriptions concerning national security, and the date shown on this Acknowledgement Receipt will establish the international filing date of the application.

IN THE UNITED STATES PATENT AND TRADEMARK OFFICE

Group Art Unit: 3772 | Examiner: Hao D. Mai

Serial No.: 14/228, 057 | Filed: March 27, 2014

In re Application of: Thien Nguyen

Confirmation No.: 1983 | Customer No.: 138718

Title: INTRAORAL DEVICE WITH SLIT

SUPPLEMENTAL INFORMATION DISCLOSURE STATEMENT
Under 37 C.F.R. § 1.56 and 1.97-1.98

Examiner:

Pursuant to the provisions of 37 C.F.R. §§ 1.56 and 1.97-98 of the Rules of Practice in Patent Cases, enclosed herewith is form PTO-SB-08, listing several references. The Examiner is requested to make these references of official record in the application.

The references cited may be material to examination of the application and are submitted in compliance with the Applicant's duty of disclosure as defined by 37 C.F.R. § 1.56.

Applicants hereby declare, pursuant to 37 C.F.R. §1.97(e)(2), that no item of information contained in the information disclosure statement was cited in a communication from a foreign patent office in a counterpart foreign application and, to the knowledge of the person signing the certification after having made a reasonable inquiry, no item of information contained in the information disclosure statement was

known to any individual designated in 37 C.F.R. §1.56(c) more than three months prior to the filing of the information disclosure statement.

No representation is made or intended as to the completeness of this list, nor is the inclusion of any reference an admission that it is prior art or pertinent to this application.

Respectfully submitted,
POLSINELLI LLP

Dated: March 2, 2022

By: _____/Tam Thanh Pham/_____
Tam Thanh Pham (Reg. No. 50,565)
Polsinelli LLP
Three Embarcadero Center, Suite 2400
San Francisco, CA 94111
415-248-2100 (Main)
patentdocketing@polsinelli.com

PTO/SB/06 (09-11)
Approved for use through 1/31/2014. OMB 0651-0032
U.S. Patent and Trademark Office; U.S. DEPARTMENT OF COMMERCE
Under the Paperwork Reduction Act of 1995, no persons are required to respond to a collection of information unless it displays a valid OMB control number.

PATENT APPLICATION FEE DETERMINATION RECORD Substitute for Form PTO-875	Application or Docket Number 14/228,057	Filing Date 03/27/2014	☐ To be Mailed

ENTITY: ☐ LARGE ☑ SMALL ☐ MICRO

APPLICATION AS FILED - PART I

FOR	(Column 1) NUMBER FILED	(Column 2) NUMBER EXTRA		RATE ($)	FEE ($)
☐ BASIC FEE (37 CFR 1.16(a), (b), or (c))	N/A	N/A		N/A	
☐ SEARCH FEE (37 CFR 1.16(k), (i), or (m))	N/A	N/A		N/A	
☐ EXAMINATION FEE (37 CFR 1.16(o), (p), or (q))	N/A	N/A		N/A	
TOTAL CLAIMS (37 CFR 1.16(i))	minus 20 =	*		x $40 =	
INDEPENDENT CLAIMS (37 CFR 1.16(h))	minus 3 =	*		x $210 =	
☐ APPLICATION SIZE FEE (37 CFR 1.16(s))	If the specification and drawings exceed 100 sheets of paper, the application size fee due is $310 ($155 for small entity) for each additional 50 sheets or fraction thereof. See 35 U.S.C. 41(a)(1)(G) and 37 CFR 1.16(s).				
☐ MULTIPLE DEPENDENT CLAIM PRESENT (37 CFR 1.16(j))					
* If the difference in column 1 is less than zero, enter "0" in column 2.				TOTAL	

APPLICATION AS AMENDED - PART II

		(Column 1)		(Column 2)	(Column 3)			
AMENDMENT	03/14/2022	CLAIMS REMAINING AFTER AMENDMENT		HIGHEST NUMBER PREVIOUSLY PAID FOR	PRESENT EXTRA		RATE ($)	ADDITIONAL FEE ($)
	Total (37 CFR 1.16(i))	* 21	Minus	** 21	= 0		x $50 =	0
	Independent (37 CFR 1.16(h))	* 2	Minus	*** 3	= 0		x $240 =	0
	☐ Application Size Fee (37 CFR 1.16(s))							
	☐ FIRST PRESENTATION OF MULTIPLE DEPENDENT CLAIM (37 CFR 1.16(j))							
							TOTAL ADD'L FEE	0

		(Column 1)		(Column 2)	(Column 3)			
AMENDMENT		CLAIMS REMAINING AFTER AMENDMENT		HIGHEST NUMBER PREVIOUSLY PAID FOR	PRESENT EXTRA		RATE ($)	ADDITIONAL FEE ($)
	Total (37 CFR 1.16(i))	*	Minus	**	=		x $0 =	
	Independent (37 CFR 1.16(h))	*	Minus	***	=		x $0 =	
	☐ Application Size Fee (37 CFR 1.16(s))							
	☐ FIRST PRESENTATION OF MULTIPLE DEPENDENT CLAIM (37 CFR 1.16(j))							
							TOTAL ADD'L FEE	

* If the entry in column 1 is less than the entry in column 2, write "0" in column 3.	LIE
** If the "Highest Number Previously Paid For" IN THIS SPACE is less than 20, enter "20".	/TAMARA D H;ARRELL/
*** If the "Highest Number Previously Paid For" IN THIS SPACE is less than 3, enter "3".	
The "Highest Number Previously Paid For" (Total or Independent) is the highest number found in the appropriate box in column 1.	

This collection of information is required by 37 CFR 1.16. The information is required to obtain or retain a benefit by the public which is to file (and by the USPTO to process) an application. Confidentiality is governed by 35 U.S.C. 122 and 37 CFR 1.14. This collection is estimated to take 12 minutes to complete, including gathering, preparing, and submitting the completed application form to the USPTO. Time will vary depending upon the individual case. Any comments on the amount of time you require to complete this form and/or suggestions for reducing this burden, should be sent to the Chief Information Officer, U.S. Patent and Trademark Office, U.S. Department of Commerce, P.O. Box 1450, Alexandria, VA 22313-1450. DO NOT SEND FEES OR COMPLETED FORMS TO THIS ADDRESS. **SEND TO: Commissioner for Patents, P.O. Box 1450, Alexandria, VA 22313-1450.**

If you need assistance in completing the form, call 1-800-PTO-9199 and select option 2.

PTO/SB/30EFS (01-22)
Approved for use through 05/31/2024. OMB 0651-0031
U.S. Patent and Trademark Office; U.S. DEPARTMENT OF COMMERCE
Under the Paperwork Reduction Act of 1995, no persons are required to respond to a collection of information unless it contains a valid OMB control number.

REQUEST FOR CONTINUED EXAMINATION(RCE)TRANSMITTAL
(Submitted Only via EFS-Web)

Application Number	14/228,057	Filing Date	2014-03-27	Docket Number (if applicable)	INCEP-001COD	Art Unit	3772
First Named Inventor	Thien Nguyen			Examiner Name	Hao D. Mai		

This is a Request for Continued Examination (RCE) under 37 CFR 1.114 of the above-identified application.
Request for Continued Examination (RCE) practice under 37 CFR 1.114 does not apply to any utility or plant application filed prior to June 8, 1995, or to any design application. The Instruction Sheet for this form is located at WWW.USPTO.GOV

SUBMISSION REQUIRED UNDER 37 CFR 1.114

Note: If the RCE is proper, any previously filed unentered amendments and amendments enclosed with the RCE will be entered in the order in which they were filed unless applicant instructs otherwise. If applicant does not wish to have any previously filed unentered amendment(s) entered, applicant must request non-entry of such amendment(s).

☐ Previously submitted. If a final Office action is outstanding, any amendments filed after the final Office action may be considered as a submission even if this box is not checked.

- ☐ Consider the arguments in the Appeal Brief or Reply Brief previously filed on _____
- ☐ Other _____

☒ Enclosed

- ☒ Amendment/Reply
- ☐ Information Disclosure Statement (IDS)
- ☐ Affidavit(s)/ Declaration(s)
- ☐ Other _____

MISCELLANEOUS

☐ Suspension of action on the above-identified application is requested under 37 CFR 1.103(c) for a period of months _____
(Period of suspension shall not exceed 3 months; Fee under 37 CFR 1.17(i) required)

☐ Other _____

FEES

The RCE fee under 37 CFR 1.17(e) is required by 37 CFR 1.114 when the RCE is filed.

☒ The Director is hereby authorized to charge any underpayment of fees, or credit any overpayments, to Deposit Account No 501662

SIGNATURE OF APPLICANT, ATTORNEY, OR AGENT REQUIRED

☒ Patent Practitioner Signature

☐ Applicant Signature

PTO/SB/30EFS (01-22)
Approved for use through 05/31/2024. OMB 0651-0031
U.S. Patent and Trademark Office; U.S. DEPARTMENT OF COMMERCE
Under the Paperwork Reduction Act of 1995, no persons are required to respond to a collection of information unless it contains a valid OMB control number.

Signature of Registered U.S. Patent Practitioner			
Signature	/Tam Thanh Pham/	Date (YYYY-MM-DD)	2022-03-14
Name	Tam Thanh Pham	Registration Number	50565

This collection of information is required by 37 CFR 1.114. The information is required to obtain or retain a benefit by the public which is to file (and by the USPTO to process) an application. Confidentiality is governed by 35 U.S.C. 122 and 37 CFR 1.11 and 1.14. This collection is estimated to take 12 minutes to complete, including gathering, preparing, and submitting the completed application form to the USPTO. Time will vary depending upon the individual case. Any comments on the amount of time you require to complete this form and/or suggestions for reducing this burden, should be sent to the Chief Information Officer, U.S. Patent and Trademark Office, U.S. Department of Commerce, P.O. Box 1450, Alexandria, VA 22313-1450.

If you need assistance in completing the form, call 1-800-PTO-9199 and select option 2.

Privacy Act Statement

The Privacy Act of 1974 (P.L. 93-579) requires that you be given certain information in connection with your submission of the attached form related to a patent application or patent. Accordingly, pursuant to the requirements of the Act, please be advised that: (1) the general authority for the collection of this information is 35 U.S.C. 2(b)(2); (2) furnishing of the information solicited is voluntary; and (3) the principal purpose for which the information is used by the U.S. Patent and Trademark Office is to process and/or examine your submission related to a patent application or patent. If you do not furnish the requested information, the U.S. Patent and Trademark Office may not be able to process and/or examine your submission, which may result in termination of proceedings or abandonment of the application or expiration of the patent.

The information provided by you in this form will be subject to the following routine uses:

1. The information on this form will be treated confidentially to the extent allowed under the Freedom of Information Act (5 U.S.C. 552) and the Privacy Act (5 U.S.C. 552a). Records from this system of records may be disclosed to the Department of Justice to determine whether the Freedom of Information Act requires disclosure of these records.

2. A record from this system of records may be disclosed, as a routine use, in the course of presenting evidence to a court, magistrate, or administrative tribunal, including disclosures to opposing counsel in the course of settlement negotiations.

3. A record in this system of records may be disclosed, as a routine use, to a Member of Congress submitting a request involving an individual, to whom the record pertains, when the individual has requested assistance from the Member with respect to the subject matter of the record.

4. A record in this system of records may be disclosed, as a routine use, to a contractor of the Agency having need for the information in order to perform a contract. Recipients of information shall be required to comply with the requirements of the Privacy Act of 1974, as amended, pursuant to 5 U.S.C. 552a(m).

5. A record related to an International Application filed under the Patent Cooperation Treaty in this system of records may be disclosed, as a routine use, to the International Bureau of the World Intellectual Property Organization, pursuant to the Patent Cooperation Treaty.

6. A record in this system of records may be disclosed, as a routine use, to another federal agency for purposes of National Security review (35 U.S.C. 181) and for review pursuant to the Atomic Energy Act (42 U.S.C. 218(c)).

7. A record from this system of records may be disclosed, as a routine use, to the Administrator, General Services, or his/her designee, during an inspection of records conducted by GSA as part of that agency's responsibility to recommend improvements in records management practices and programs, under authority of 44 U.S.C. 2904 and 2906. Such disclosure shall be made in accordance with the GSA regulations governing inspection of records for this purpose, and any other relevant (i.e., GSA or Commerce) directive. Such disclosure shall not be used to make determinations about individuals.

8. A record from this system of records may be disclosed, as a routine use, to the public after either publication of the application pursuant to 35 U.S.C. 122(b) or issuance of a patent pursuant to 35 U.S.C. 151. Further, a record may be disclosed, subject to the limitations of 37 CFR 1.14, as a routine use, to the public if the record was filed in an application which became abandoned or in which the proceedings were terminated and which application is referenced by either a published application, an application open to public inspections or an issued patent.

9. A record from this system of records may be disclosed, as a routine use, to a Federal, State, or local law enforcement agency, if the USPTO becomes aware of a violation or potential violation of law or regulation.

IN THE UNITED STATES PATENT AND TRADEMARK OFFICE

APPLICANT:	Dryshield, LLC
INVENTOR(S):	Thien Nguyen, et al.
APPLICATION NO.:	14/228,057
FILED:	March 27, 2014
TITLE:	INTRAORAL DEVICE WITH SLIT
EXAMINER:	Hao D. Mai
ART UNIT:	3772
CONF. NO.:	1983
ATTY.DKT.NO.:	INCEP-001COD

MAIL STOP RCE
COMMISSIONER FOR PATENTS
P.O. BOX 1450
ALEXANDRIA, VA 22313-1450

RESPONSE

Examiner Mai:

In response to the office action mailed November 12, 2021 (*Office Action*), please consider the following amendments and remarks. Amendments to the claims begin on page two, remarks begin on page seven, and a conclusion appears on page ten.

IN THE CLAIMS

PLEASE AMEND THE CLAIMS AS FOLLOWS:

1. (currently amended) A mouthpiece comprising:

a main body having a first end opposite a second end, the main body having an interior space, wherein the main body is configured in a shape wider at the first end and narrower at the second end, and wherein the main body comprises:

a first wall defined by ~~an exterior edge~~ one or more edges, the first wall comprising a slit opening extending a longitudinal length parallel to a longitudinal and central axis of the main body, the longitudinal length extending from a middle location of the first wall away from the first end and toward the second end of the main body, the slit opening allowing fluids exterior to the interior space to enter along the longitudinal length into the interior space,

a second wall defined by ~~an exterior edge~~ one or more edges that ~~corresponds~~ correspond to the ~~exterior edge~~ one or more edges of the first wall, the second wall located at a distance from the first wall, the distance corresponding to a span of the interior space, [[and]]

a connecting wall that connects the one or more edges of the first wall to the corresponding edges of the second wall across the span of the interior space between the first wall and the second wall[[;]], and

a bridge structure that includes a plurality of protrusions integral with and protruding from an interior surface of the second wall, the bridge structure extending through the interior space towards the first wall, wherein the bridge structure is not attached to the first wall, and wherein the plurality of protrusions of the bridge structure protrude in a wave shape comprising one or more crests and one or more troughs.

2. (previously presented) The mouthpiece of claim 1, wherein the second wall further includes a stability bar protruding from the interior surface of the second wall and along the longitudinal and central axis of the main body, the stability bar aligned with the slit opening.

3. (cancelled)

4. (previously presented) The mouthpiece of claim 1, wherein the main body is formed by injection-molding as one piece.

5. (previously presented) The mouthpiece of claim 1, wherein a material used to form the main body is a flexible, translucent, high heat-resistant, autoclavable silicone-based material.

6. (previously presented) The mouthpiece of claim 1, wherein the first wall and the second wall have different thicknesses.

7. (currently amended) The mouthpiece of claim 1, wherein flexibility of material of the first wall allows portions of the first wall to be pulled open at the slit opening to expose the interior space.

8. (previously presented) The mouthpiece of claim 1, further comprising a cheek retractor portion connected to the second end of the main body, the cheek retractor portion having a surface that applies pressure when bent, wherein the pressure is based on resilience of the cheek retractor portion.

9. (cancelled)

10. (previously presented) The mouthpiece of claim 1, wherein the plurality of protrusions of the bridge structure comprise a plurality of spaced contact points, and wherein spaces between the contact points are at troughs of the wave shape.

11. – 13. (cancelled)

14. (previously presented) The mouthpiece of claim 1, further comprising a suction connector portion configured to connect the interior space to a vacuum source.

15. (previously presented) The mouthpiece of claim 1, further comprising a mouth prop injection-molded in one piece.

16. (previously presented) The mouthpiece of claim 15, wherein the mouth prop is detachable and comprises a bite block portion and a strap portion.

17. - 20. (cancelled)

21. (currently amended) A mouthpiece comprising:

a main body having a first end opposite a second end, the first end wider than the second end, the main body comprising:

a first wall extending from the first end to the second end,

a second wall located at a distance from the first wall, the distance corresponding to a space between the first wall and the second wall, wherein the second wall also extends from the first end to the second end,

a connecting wall that connects one or more edges of the first wall to one or more corresponding edges of the second wall across the distance between the first wall and the second wall; and

a bridge structure that includes a plurality of protrusions integral with and protruding from an interior surface of the second wall, the bridge structure extending through the interior space towards the first wall, wherein the bridge structure is not attached to the first wall, and wherein the plurality of protrusions of the bridge structure protrude in a wave shape comprising one or more crests and one or more troughs;

a suction connector extending from the first end of the main body, wherein an evacuation conduit of the suction connector is in communication with the space between the first wall and the second wall, and wherein the suction connector includes a cutout shape configured to interlock with a corresponding protrusion shape of a vacuum adapter; and

a cheek retractor at the second end of the main body.

22. (currently amended) The mouthpiece of claim 21, wherein the plurality of protrusions of the bridge structure comprise a plurality of contact points corresponding to the crests of the wave shape, and wherein the troughs correspond to spaces between the contact points.

23. (previously presented) The mouthpiece of claim 21, wherein the first wall and the second wall are bendable, and wherein the bridge structure keeps the first wall separated from the second wall during suction.

24. (previously presented) The mouthpiece of claim 21, wherein at least one of the first wall and the second wall includes one or more perforations.

25. (previously presented) The mouthpiece of claim 21, further comprising a stability bar extending along a longitudinal axis of the main body between the first end and the second end, wherein a thickness of the stability bar reinforces a resilience of the main body.

26. (previously presented) The mouthpiece of claim 21, wherein the main body is formed by injection-molding as one piece.

27. (previously presented) The mouthpiece of claim 26, wherein at least one of the cheek retractor and suction connector is formed by injection-molding and integral with the main body.

28. (previously presented) The mouthpiece of claim 26, further comprising a stability bar extending along a longitudinal axis of the main body between the first end and the second end, wherein the stability bar is formed by injection-molding and integral with the main body.

29. (previously presented) The mouthpiece of claim 21, further comprising a mouth prop connected to the suction connector.

30. (previously presented) The mouthpiece of claim 21, wherein the suction connector includes a cutout configured to interlock with a corresponding protrusion of a vacuum adapter.

REMARKS

Rejections under 35 U.S.C. § 112

Claims 1-2, 4-8, 14-16, and 21-30 are rejected under 35 U.S.C. § 112(b) as purportedly indefinite. *Office Action,* 2. Independent claims 1 and 21 are amended to recite that the 'connecting wall that connects one or more edges of the first wall to one or more corresponding edges of the second wall across the distance between the first wall and the second wall.' Express support is found in the *Specification* as follows:

> An exemplary main body portion 110, when placed in a mouth, may include an anterior wall facing the front of the mouth (e.g., the side with slit 170) and a posterior wall facing the back of the mouth. The two walls may **connect at a superior wall and an inferior wall** forming a **body that is at least partially enclosed**.
> …
> In some embodiments, a set of holes may also form a mesh along the walls of the **superior and inferior edges**.

Specification, [0035]; [0037]. In addition, the "antecedent basis" issues identified by the *Office Action* no longer appear in the present claims. Based on the foregoing, Applicant submits that the present claims comply with the requirements of Section 112 and respectfully requests withdrawal of the rejections.

Rejections under 35 U.S.C. §§ 102-103

Claims 1, 2, 4-8, 14-16, and 21-30 are rejected under 35 U.S.C. § 112(b) as being anticipated by H*irsch* (US Patent Publication 2006/0063129). *Id.* at 3. Claim 1 has been currently amended to recite as follows (emphasis added):

> a bridge structure that includes a plurality of protrusions integral with and protruding from an interior surface of the second wall, the bridge structure extending through the interior space towards the first wall, wh**erein the bridge structure is not attached to the first wall,** wherein the plurality of protrusions of

the bridge structure protrude in **a wave shape** comprising one or more crests and one or more troughs.

The recited limitations find support in the *Specification*, which describes "a bridge structure 180 on an interior surface" that includes a "wave-like protrusion that generally corresponds to the distance between the anterior and posterior walls extending substantially (within 1 mm) the full distance at its crest and substantially flush to the surface at its trough." *Specification* at [0040]. In addition, FIGs. 1E and 5 (provided below) illustrate views of such a 'bridge structure' as follows:

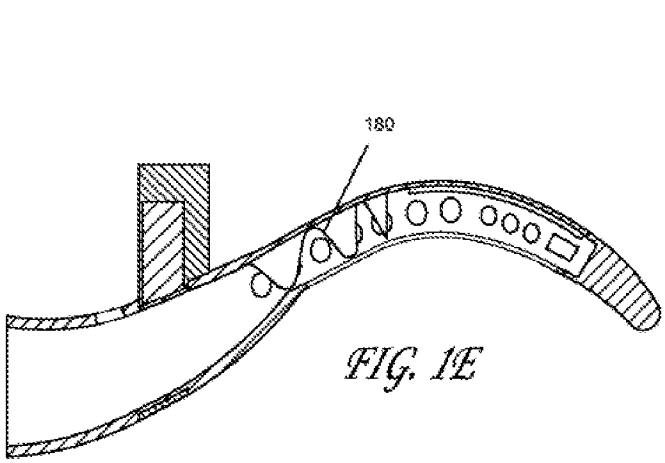

FIG. 1E

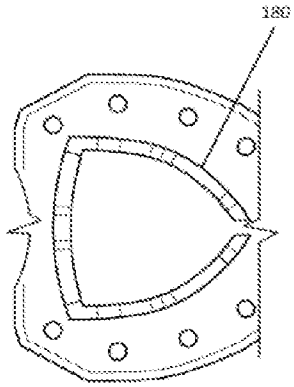

FIG. 5

By contrast, the cited structure of *Hirsch* are purported to be "bridge forming 80 and 82." *Office Action* at 5 (citing FIG. 8A and 8B). As illustrated in FIGs. 8A and 8B of *Hirsch*, however, there are no 'plurality of protrusions, and *Hirsch* itself describes structure 80 and 82 as "a first main evacuation channel 80 and a second main evacuation channel 82 for evacuating fluids from the device 20." *Hirsch*, [0056].

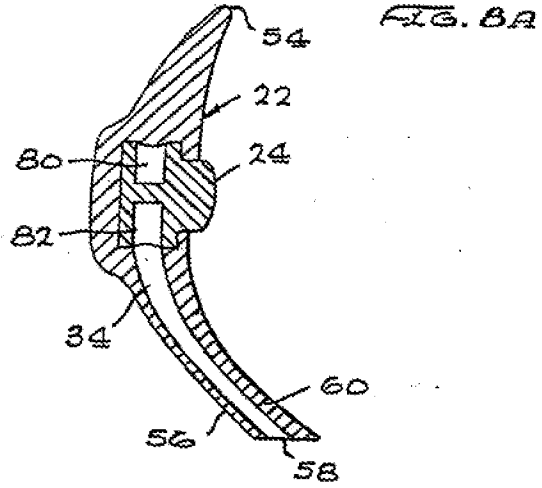

FIG. 8A

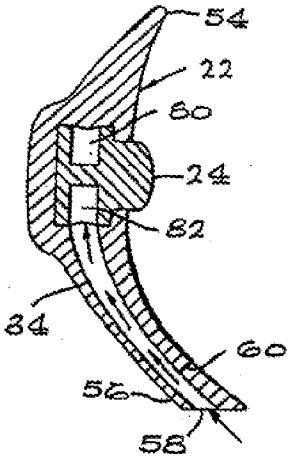

FIG. 8B

Hirsch's "channels" are not disclosed as being formed by any 'protrusions,' and there are no structures illustrated in *Hirsch*'s FIGs. 8A-8B as 'protrud[ing] from the interior surface of the second wall' as claimed. On the contrary, the structures illustrated in FIGs. 8A-8B as forming channels 80 and 82 are wholly lacking in any 'protrusions' whatsoever.

Thus, *Hirsch* fails to teach the claimed 'bridge structure that includes a plurality of protrusions integral with and protruding from an interior surface of the second wall, the bridge structure extending through the interior space towards the first wall, wherein the bridge structure is not attached to the first wall, wherein the plurality of protrusions of the bridge structure protrude in a wave shape comprising one or more crests and one or more troughs' as claimed.

In view of the above remarks, the independent claims are patentable over the cited references. Furthermore, because each of the dependent claims incorporates by reference all the limitations of the independent claim from which it depends, the dependent claims are allowable for at least the same reasons. The Applicant therefore respectfully requests that the rejections of the claims under 35 U.S.C. § 102 and 103 be withdrawn.

CONCLUSION

Based on the foregoing remarks, the Applicant respectfully contends that all outstanding rejections and objections have been overcome. Accordingly, it is respectfully submitted that the present application is in condition for allowance.

If the Examiner has any questions regarding the case, the Examiner is invited to contact the Applicant's undersigned representative.

Respectfully submitted,

March 14, 2022

By: /Tam Thanh Pham/

Tam Thanh Pham, Reg. No. 50,565
POLSINELLI *LLP*
3 Embarcadero Center, Suite 2400
San Francisco, CA 94111
Phone: (415) 248-2116
patentdocketing@polsinelli.com

Electronic Patent Application Fee Transmittal

Application Number:	14228057
Filing Date:	27-Mar-2014
Title of Invention:	INTRAORAL DEVICE WITH SLIT
First Named Inventor/Applicant Name:	Thien Nguyen
Filer:	TamThanh Thi Pham
Attorney Docket Number:	INCEP-001COD

Filed as Small Entity

Filing Fees for Utility under 35 USC 111(a)

Description	Fee Code	Quantity	Amount	Sub-Total in USD($)
Basic Filing:				
Pages:				
Claims:				
Miscellaneous-Filing:				
Petition:				
Patent-Appeals-and-Interference:				
Post-Allowance-and-Post-Issuance:				
Extension-of-Time:				

Description	Fee Code	Quantity	Amount	Sub-Total in USD($)
Extension - 1 month with $0 paid	2251	1	110	110
Miscellaneous:				
RCE- 2ND AND SUBSEQUENT REQUEST	2820	1	1000	1000
		Total in USD ($)		**1110**

Electronic Acknowledgement Receipt

EFS ID:	45225245
Application Number:	14228057
International Application Number:	
Confirmation Number:	1983
Title of Invention:	INTRAORAL DEVICE WITH SLIT
First Named Inventor/Applicant Name:	Thien Nguyen
Customer Number:	138718
Filer:	TamThanh Thi Pham
Filer Authorized By:	
Attorney Docket Number:	INCEP-001COD
Receipt Date:	14-MAR-2022
Filing Date:	27-MAR-2014
Time Stamp:	21:31:31
Application Type:	Utility under 35 USC 111(a)

Payment information:

Submitted with Payment	yes
Payment Type	DA
Payment was successfully received in RAM	$1110
RAM confirmation Number	E20223DL31543172
Deposit Account	
Authorized User	

The Director of the USPTO is hereby authorized to charge indicated fees and credit any overpayment as follows:

File Listing:

Document Number	Document Description	File Name	File Size(Bytes)/ Message Digest	Multi Part /.zip	Pages (if appl.)
1	Request for Continued Examination (RCE)	INCEP-001COD_RCE.pdf	40493 346574174fdba06cddb5ec9deec0daf61688d7d5	no	3
Warnings:					
This is not a USPTO supplied RCE SB30 form.					
Information:					
2		INCEP-001COD_Response_3-14-2022.pdf	233029 ae21f16847a8ae53dff7d3ab35e36bbab0fabacf	yes	10

	Multipart Description/PDF files in .zip description		
	Document Description	**Start**	**End**
	Amendment Submitted/Entered with Filing of Continued Prosecution Application (CPA)/Request for Continued Examination(RCE)	1	1
	Claims	2	6
	Applicant Arguments/Remarks Made in an Amendment	7	10

Warnings:					
Information:					
3	Fee Worksheet (SB06)	fee-info.pdf	40181 1384a5a07f726386f73dfdc1cdcd97011fed2620	no	2
Warnings:					
Information:					
			Total Files Size (in bytes):	313703	

This Acknowledgement Receipt evidences receipt on the noted date by the USPTO of the indicated documents, characterized by the applicant, and including page counts, where applicable. It serves as evidence of receipt similar to a Post Card, as described in MPEP 503.

New Applications Under 35 U.S.C. 111

If a new application is being filed and the application includes the necessary components for a filing date (see 37 CFR 1.53(b)-(d) and MPEP 506), a Filing Receipt (37 CFR 1.54) will be issued in due course and the date shown on this Acknowledgement Receipt will establish the filing date of the application.

National Stage of an International Application under 35 U.S.C. 371

If a timely submission to enter the national stage of an international application is compliant with the conditions of 35 U.S.C. 371 and other applicable requirements a Form PCT/DO/EO/903 indicating acceptance of the application as a national stage submission under 35 U.S.C. 371 will be issued in addition to the Filing Receipt, in due course.

New International Application Filed with the USPTO as a Receiving Office

If a new international application is being filed and the international application includes the necessary components for an international filing date (see PCT Article 11 and MPEP 1810), a Notification of the International Application Number and of the International Filing Date (Form PCT/RO/105) will be issued in due course, subject to prescriptions concerning national security, and the date shown on this Acknowledgement Receipt will establish the international filing date of the application.

Substitute for Form 1449/PTO				Complete if Known	
INFORMATION DISCLOSURE STATEMENT BY APPLICANT *(use as many sheets as necessary)*				Application Number	14/228,057
				Filing Date	March 27, 2014
				First Named Inventor:	Thien Nguyen
				Art Unit	3772
				Examiner Name	Hao D. Mai
Sheet	**1**	**of**	**2**	Attorney Docket Number	INCEP-001COD

U.S. PATENT DOCUMENTS

Examiner Initials*	Cite No.'	Document Number Number-Kind Code[2](If known)		Publication Date MM-DD-YYYY	Name of Patentee or Applicant of Cited Document	Pages, Columns, Lines, Where Relevant Passages or Relevant Figures Appear
		US-	D267,586	1/11/1983	Hatlen	
		US-	4,975,057	12/4/1990	Dyfvermark	
		US-	5,730,599	3/24/1998	Pak	
		US-	6,652,276	11/25/2003	Fischer et al.	
		US-	6,655,960	12/2/2003	Fischer	
		US-	6,716,029	4/6/2004	Fischer et al.	
		US-	10,939,979	3/9/2021	Lombardi	
		US-	2018/0153637	6/7/2018	Al-Shawi et al.	
		US-	2020/0383560	12/10/2020	Day	
		US-				
		US-				
		US-				

FOREIGN PATENT DOCUMENTS

Examiner Initials*	Cite No.'	Foreign Patent Document Country Code[3] Number[4] Kind Codes (if known)	Publication Date MM-DD-YYYY	Name of Patentee or Applicant of Cited Document	Pages, Columns, Lines, Where Relevant Passages or Relevant Figures Appear	T6
		CA 3,139,689	11/19/2020	Dryshield, LLC		
		CN 104490483	4/8/2015	Huanghua Kangtian Medical Device		
		EP 3965637 (corresponds to WO 2020/231864)	3/16/2022	Dryshield, LLC		
		TW 202108088	3/1/2021	Dryshield, LLC		

Examiner Signature		Date Considered	

*EXAMINER: Initial if reference considered, whether or not citation is in conformance with MPEP 609; Draw line through citation if not in conformance and not considered. Include copy of this form with next communication to applicant. 'Applicant's unique citation designation number (optional). [2]See Kinds Codes of USPTO Patent Documents at www.uspto.gov or MPEP 901.04. [3]Enter Office that issued the document, by the two-letter code (WIPO Standard ST.3). [4]For Japanese patent documents, the indication of the year of reign of the Emperor must precede the serial number of the patent document. [5]Kind of document by the appropriate symbols as indicated on the document under WIPO Standard ST. 16 if possible. [6]Applicant is to place a check mark here if English language translation is attached.

This collection of information is required by 37 CFR 1.97 and 1.98. The information is required to obtain or retain a benefit by the public which is to file (and by the USPTO to process) an application. Confidentiality is governed by 35 U.S.C. 122 and 37 CFR 1.14. This collection is estimated to take 2 hours to complete including gathering, preparing, and submitting the completed application form to the USPTO. Time will vary depending upon the individual case. Any comments on the amount of time you require to complete this form and/or suggestions for reducing this burden, should be sent to the Chief Information Officer, U.S. Patent and Trademark Office, P.O. Box 1450, Alexandria, VA 22313-1450. DO NOT SENT FEES OR COMPLETED FORMS TO THIS ADDRESS. **SEND TO: Commissioner for Patents, P.O. Box 1450, Alexandria, Virginia 22313-1450.**

If you need assistance in completing the form, call 1-800-PTO-9199 (1-800-786-9199) and select option 2.

Substitute for Form 1449/PTO	*Complete if Known*	
INFORMATION DISCLOSURE STATEMENT BY APPLICANT *(use as many sheets as necessary)*	Application Number	14/228,057
	Filing Date	March 27, 2014
	First Named Inventor:	Thien Nguyen
	Art Unit	3772
	Examiner Name	Hao D. Mai
Sheet 2 **of** 2	Attorney Docket Number	INCEP-001COD

NON PATENT LITERATURE DOCUMENTS

Examiner Initials*	Cite No'	Include name of the author (in CAPITAL LETTERS), title of the article (when appropriate), title of the item (book, magazine, journal, serial, symposium, catalog, etc.), date, page(s), volume-issue number(s), publisher, city and/or country where published	T^2
		PCT Application No. PCT/US2020/032228 International Preliminary Report on Patentability dated 11/16/21	
		Docket No. INCEP-005 U.S. Patent Application 16/870,745 Final Office Action mailed 5/12/22	
		Docket No. INCEP-009D U.S. Patent Application 29/782,644 Final Office Action mailed 5/11/22	
		Docket No. INCEP-010D U.S. Patent Application 29/782,643 Final Office Action mailed 5/11/22	

Examiner Signature		Date Considered	

*Examiner: Initial if reference considered, whether or not citation is in conformance with MPEP 609. Draw line through citation if not in conformance and not considered. Include copy of this form with next communication to applicant.

'Applicant's unique citation designation number (optional). 'Applicant is to place a check mark here if English Translation is attached.

This collection of information is required by 37 CFR 1.98. The information is required to obtain or retain a benefit by the public which is to file (and by the USPTO to process) an application. Confidentiality is governed by 35 U.S.C. 122 and 37 CFR 1.14. This collection is estimated to take 2 hours to complete including gathering, preparing, and submitting the completed application form to the USPTO. Time will vary depending upon the individual case. Any comments on the amount of time you require to complete this form and/or suggestions for reducing this burden, should be sent to the Chief Information Officer, U.S. Patent and Trademark Office, P.O. Box 1450, Alexandria, VA 22313-1450. DO NOT SENT FEES OR COMPLETED FORMS TO THIS ADDRESS. **SEND TO: Commissioner for Patents, P.O. Box 1450, Alexandria, Virginia 22313-1450.**

If you need assistance in completing the form, call 1-800-PTO-9199 (1-800-786-9199) and select option 2.

Innovation, Sciences et Développement économique Canada
Office de la Propriété Intellectuelle du Canada

Innovation, Science and Economic Development Canada
Canadian Intellectual Property Office

CA 3139689 A1 2020/11/19

(21) 3 139 689

(12) DEMANDE DE BREVET CANADIEN
CANADIAN PATENT APPLICATION

(13) A1

(86) Date de dépôt PCT/PCT Filing Date: 2020/05/08
(87) Date publication PCT/PCT Publication Date: 2020/11/19
(85) Entrée phase nationale/National Entry: 2021/11/08
(86) N° demande PCT/PCT Application No.: US 2020/032228
(87) N° publication PCT/PCT Publication No.: 2020/231864
(30) Priorité/Priority: 2019/05/10 (US62/846,353)

(51) Cl.Int./Int.Cl. *A61B 1/24* (2006.01), *A61C 17/00* (2006.01), *A61C 17/06* (2006.01), *A61C 17/10* (2006.01)

(71) Demandeur/Applicant:
DRYSHIELD, LLC, US

(72) Inventeurs/Inventors:
NGUYEN, THIEN, US;
PHAM, TAM THANH, US;
NGUYEN, ETHAN, US;
NGUYEN, LAUREN, US

(74) Agent: RICHES, MCKENZIE & HERBERT LLP

(54) Titre : EMBOUT BUCCAL DENTAIRE
(54) Title: DENTAL MOUTHPIECE

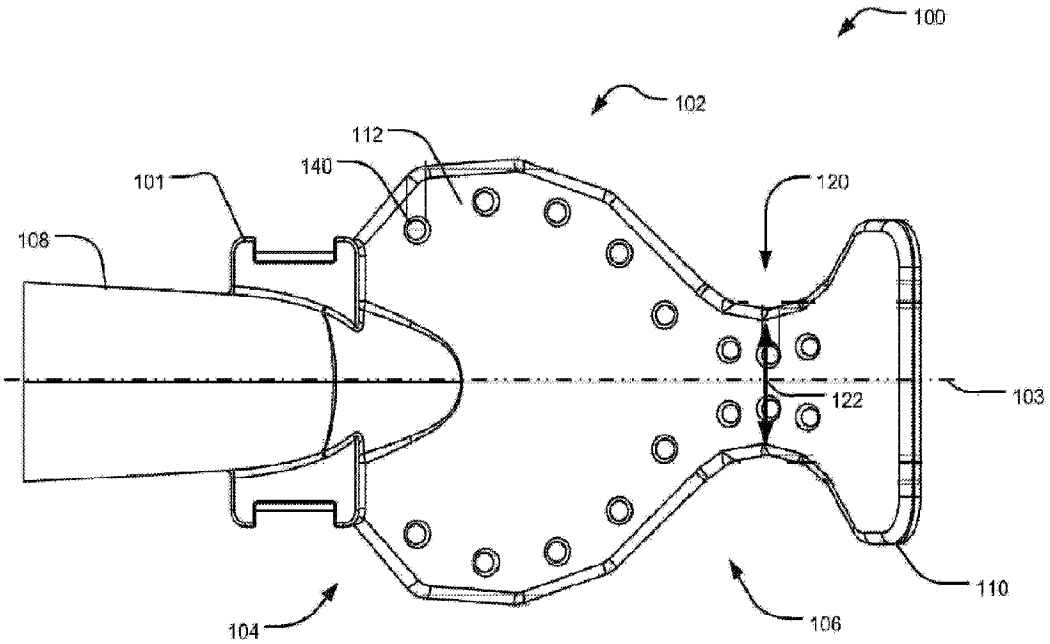

FIG. 1

(57) Abrégé/Abstract:
A dental mouthpiece is provided that may be attached to a high-suction dental adapter for the purpose of assisting the dental staff during dental procedures through chair-side, hands-free suction, and isolation. Such a mouthpiece may comprise a main body portion, a cheek retractor portion, and a suction connector portion. In an embodiment, the main body portion, cheek retractor portion, and suction connector portion may be molded in one piece, preferably by injection molding. The main body portion has an anterior wall inside the curve and a posterior wall outside the curve, and an at least one connector connecting the anterior wall and the posterior wall. The main body portion has an anterior intervening wall and the posterior intervening wall in between the anterior and posterior walls. The anterior intervening wall and the posterior intervening walls have alternating crests and troughs.

(12) INTERNATIONAL APPLICATION PUBLISHED UNDER THE PATENT COOPERATION TREATY (PCT)

(19) World Intellectual Property Organization
International Bureau

(43) International Publication Date
19 November 2020 (19.11.2020)

WIPO | PCT

(10) International Publication Number
WO 2020/231864 A1

(51) International Patent Classification:
A61B 1/24 (2006.01) *A61C 17/10* (2006.01)
A61C 17/00 (2006.01) *A61C 5/14* (2006.01)
A61C 17/06 (2006.01)

(21) International Application Number:
PCT/US2020/032228

(22) International Filing Date:
08 May 2020 (08.05.2020)

(25) Filing Language: English

(26) Publication Language: English

(30) Priority Data:
62/846,353 10 May 2019 (10.05.2019) US

(71) Applicant: **DRYSHIELD, LLC** [US/US]; 11230 Grace Avenue, Suite B, Fountain Valley, CA 92708 (US).

(72) Inventors: **NGUYEN, Thien**; 11230 Grace Avenue, Suite B, Fountain Valley, CA 92708 (US). **PHAM, Tam, Thanh**; 11230 Grace Avenue, Suite B, Fountain Valley, CA 92708 (US). **NGUYEN, Ethan**; 11230 Grace Avenue, Suite B, Fountain Valley, CA 92708 (US). **NGUYEN, Lauren**; 11230 Grace Avenue, Suite B, Fountain Valley, CA 92708 (US).

(74) Agent: **CHUNG, Ruby** et al.; Polsinelli LLP, Three Embarcadero Center, Suite 2400, San Francisco, CA 94111 (US).

(81) Designated States *(unless otherwise indicated, for every kind of national protection available)*: AE, AG, AL, AM, AO, AT, AU, AZ, BA, BB, BG, BH, BN, BR, BW, BY, BZ, CA, CH, CL, CN, CO, CR, CU, CZ, DE, DJ, DK, DM, DO, DZ, EC, EE, EG, ES, FI, GB, GD, GE, GH, GM, GT, HN, HR, HU, ID, IL, IN, IR, IS, JO, JP, KE, KG, KH, KN, KP, KR, KW, KZ, LA, LC, LK, LR, LS, LU, LY, MA, MD, ME, MG, MK, MN, MW, MX, MY, MZ, NA, NG, NI, NO, NZ,

(54) Title: DENTAL MOUTHPIECE

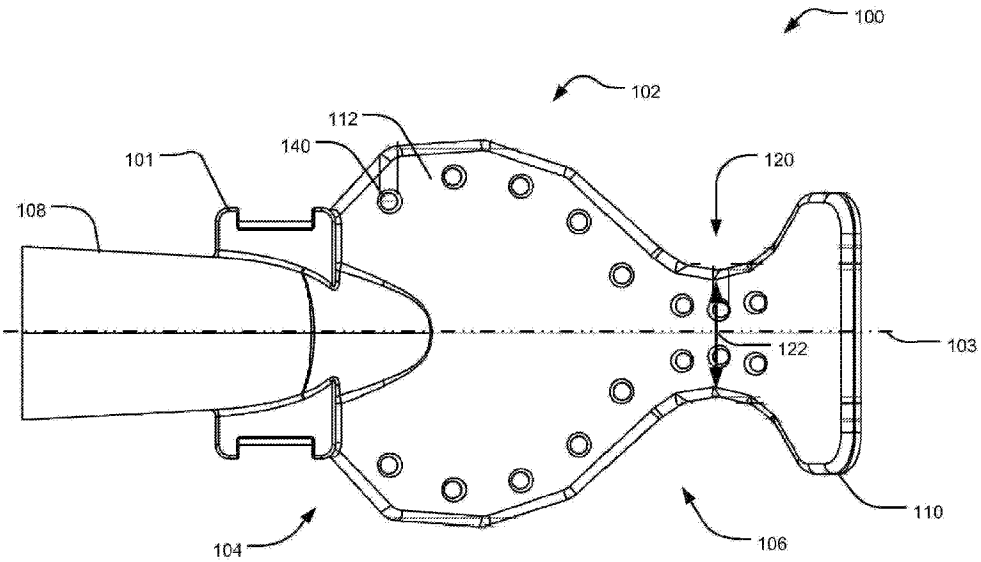

FIG. 1

(57) Abstract: A dental mouthpiece is provided that may be attached to a high-suction dental adapter for the purpose of assisting the dental staff during dental procedures through chair-side, hands-free suction, and isolation. Such a mouthpiece may comprise a main body portion, a cheek retractor portion, and a suction connector portion. In an embodiment, the main body portion, cheek retractor portion, and suction connector portion may be molded in one piece, preferably by injection molding. The main body portion has an anterior wall inside the curve and a posterior wall outside the curve, and an at least one connector connecting the anterior wall and the posterior wall. The main body portion has an anterior intervening wall and the posterior intervening wall in between the anterior and posterior walls. The anterior intervening wall and the posterior intervening walls have alternating crests and troughs.

WO 2020/231864 A1

OM, PA, PE, PG, PH, PL, PT, QA, RO, RS, RU, RW, SA, SC, SD, SE, SG, SK, SL, ST, SV, SY, TH, TJ, TM, TN, TR, TT, TZ, UA, UG, US, UZ, VC, VN, WS, ZA, ZM, ZW.

(84) **Designated States** *(unless otherwise indicated, for every kind of regional protection available)*: ARIPO (BW, GH, GM, KE, LR, LS, MW, MZ, NA, RW, SD, SL, ST, SZ, TZ, UG, ZM, ZW), Eurasian (AM, AZ, BY, KG, KZ, RU, TJ, TM), European (AL, AT, BE, BG, CH, CY, CZ, DE, DK, EE, ES, FI, FR, GB, GR, HR, HU, IE, IS, IT, LT, LU, LV, MC, MK, MT, NL, NO, PL, PT, RO, RS, SE, SI, SK, SM, TR), OAPI (BF, BJ, CF, CG, CI, CM, GA, GN, GQ, GW, KM, ML, MR, NE, SN, TD, TG).

Published:
— *with international search report (Art. 21(3))*

DENTAL MOUTHPIECE

CROSS REFERENCE TO RELATED APPLICATIONS

[0001] The present application claims the priority benefit of U.S. Provisional Patent Application Serial No. 62/846,353 filed May 10, 2019 entitled, "Dental Mouthpiece," the disclosures of which are incorporated herein by reference.

BACKGROUND OF THE INVENTION

1. Field of the Invention

[0002] The present invention generally relates to the field of dental mouthpieces. More specifically, the present invention relates to intraoral dental suction and isolation mouthpieces.

2. Description of Related Art

[0003] Various mouthpieces are currently used by dental health professionals, dental hygienists, and dental assistants in the field of dentistry. In the past, a dental patient has been treated by a traditional two-person team that comprises a dental professional and a dental assistant. Further, dental treatment may be provided by the team using many different types of dental equipment and materials. Such dental equipment and materials may include such items as an intraoral mirror, a bite block, a slow speed suction ejector, a high speed suction ejector, gauzes, cotton rolls, and dry angles. Each item of dental equipment may be used for different purposes, though some may be used in combination for some types of dental services. As such, a dental professional seeking to provide such dental services may need to use multiple items of such dental equipment. An important role of the dental assistant is therefore to assist the dental professional in coordinating the use of these multiple items of different equipment and materials.

[0004] There is, therefore, a need in the art for improved systems and methods of providing dental services in a more efficient, comfortable, and safe manner to the dental patient.

SUMMARY OF THE CLAIMED INVENTION

[0005] Embodiments of a dental mouthpiece formed in a curve are disclosed. Such a mouthpiece may comprise of a main body portion at a central part of the curve having a first end and a second end, a suction connector portion connected to the main body portion at the first end, and a cheek retractor portion connected to the main body portion at the second end.

[0006] In some embodiments, the main body portion, the suction connector portion, and the cheek retractor portion may be molded in one piece, preferably by injection molding. In an exemplary embodiment, the mouthpiece may be made of a material that is flexible, translucent, conductive to injection molding, high heat-resistant, and autoclavable. Such a material may include silicone. Because the mouthpiece may be made of a high heat-resistant and autoclavable material, such a mouthpiece may be reusable.

[0007] The main body portion may comprise of an anterior wall inside the curve and a posterior wall outside the curve. The anterior wall and the posterior wall may define an interior space, within which at least one connector connects the anterior wall to the posterior wall. At least one anterior intervening wall extends from the anterior wall partially towards the posterior wall, and at least one posterior intervening wall extends from the posterior wall partially towards the anterior wall. The anterior intervening walls and the posterior intervening walls each has alternating crests and troughs.

BRIEF DESCRIPTION OF THE FIGURES

[0008] FIG. 1 is a top view of the dental mouthpiece;

[0009] FIG. 2 is an isometric view of a dental mouthpiece shown in FIG. 1;

[0010] FIG. 3 is a rear view of the dental mouthpiece shown in FIG. 1;

[0011] FIG. 4 is a bottom view of the dental mouthpiece shown in FIG. 1;

[0012] FIG. 5 is a coronal top cross section view of the dental mouthpiece shown in FIG. 1; and

[0013] FIG. 6 is a side view of the dental mouthpiece shown in FIG. 1;

[0014] FIG. 7 is a side of the dental mouthpiece shown in FIG. 1 with an anterior wall of the mouthpiece pulled away from a posterior wall of the mouthpiece;

[0015] FIG. 8 is a transverse cross section view of the dental mouthpiece shown in FIG. 1 at the intersection between the suction connector and the main body.

[0016] FIG. 9 is a transverse cross section view of the dental mouthpiece shown in FIG. 1 at the intersection between the suction connector and the main body.

[0017] FIG. 10 is a longitudinal cross section view of an embodiment of the dental mouthpiece shown in FIG. 1 with a wall connector.

[0018] FIG. 11 is a longitudinal cross section view of an embodiment of the dental mouthpiece shown in FIG. 1 with column connectors.

DETAILED DESCRIPTION

[0019] Embodiments of the present invention may include a mouthpiece that may be attached to a high-suction dental adapter for the purpose of assisting the dental staff during dental procedures through chair-side, hands-free suction, and isolation. Such a mouthpiece may comprise a main body portion, a cheek retractor portion, a suction connector portion, a stability bar, and a bite block. In some embodiments, any combination of the main body portion, cheek retractor portion, suction connector portion, a stability bar and bite block (and sub-portions thereof) may be molded in one piece, preferably by injection molding. In an exemplary embodiment, the mouthpiece may be made of a material that is flexible, resilient, at least translucent, and conducive to injection molding. Such a material may include thermoplastic elastomers known in the art.

[0020] FIG. 1 is a top view of the dental mouthpiece. A dental mouthpiece 100 includes a main body portion 102 having a first end 104 and a second end 106 opposite the first end 104. A longitudinal axis 103 may extend from the first end 104 to the second end 106. In the illustrated embodiment, a suction connector portion 108 may be coupled to the first end 104 and a cheek retractor portion 110 may be coupled to the second end 106, though in other examples the mouthpiece 100 may not have a suction connector portion 108 and/or a cheek retractor portion 110. A bite block 101 may also be integrated to the suction connector portion 108 near the first end 104 of the main body portion 102, though the bite block 101 may be positioned anywhere on the suction connector portion 108.

[0021] The main body portion 101 may include a neck 120 extending from the second end 106 to the cheek retractor portion 110. The neck 120 may have a width 122 that is less than a width of the main body portion 102, a width of the cheek retractor portion 110, and/or a width of the suction connector portion 108, though the width 122 may be greater than the width of the main body portion 102, the cheek retractor portion 110, and/or the suction connector portion 108 in other examples.

[0022] In the illustrated embodiment, the suction connector portion 108, the cheek retractor portion 110, the bite block 101, and the main body portion 102 are constructed as one piece,

though in other examples each of the suction connector portion 108, the cheek retractor portion 110, the bite block 101, and/or the main body 102 may be separate pieces. For example, in some embodiments, the main body portion 102, the cheek retractor portion 110, and the suction connector portion 108 (and sub-portions thereof) may be molded as one-piece, preferably by injection molding and the bite block 101 may be a separate piece attachable to the suction connector portion 108. In an exemplary embodiment, the mouthpiece 100 may be made of a material that is flexible, resilient, translucent, and conducive to injection molding. Such a material may include thermoplastic elastomer.

[0023] FIG. 2 is an isometric view of a dental mouthpiece shown in FIG. 1. As illustrated in FIG. 2, the main body portion 102 may be shaped in a curve. Because the mouthpiece 100 is made of a flexible and resilient material (e.g., thermoplastic elastomer), the mouthpiece 100 may be bent when placed in a patient's mouth to conform to the shape of the mouth. When properly positioned, the suction connector portion 108 may protrude from one side of the patient's mouth, while the main body portion 102 lies against the back of the patient's mouth, and the cheek retractor portion 110 presses against the patient's cheek on the opposite side of the patient's mouth.

[0024] The cheek retractor portion 110 may be configured to press against and retract a patient's cheek away from the patient's teeth on an opposite side of the patient's mouth than the side from which the connection portion 108 extends. The flexibility of the material used to form the mouthpiece 100 allows for some bending when placed in the patient's mouth, but the resilience of the material further allows the mouthpiece 100 to apply pressure against a part of the patient's mouth when the mouthpiece 100 is released from bending. The material is resilient enough, for example, to allow the cheek retractor portion 110 to press against the inside of the patient's cheek with such pressure being sufficient to move the cheek away from the patient's teeth. The cheek retractor portion 110 is illustrated as a hammerhead distal region, which may be attached to the main body portion 102. The cheek retractor portion 110 may be solid in some examples, though may be hollow in other examples.

[0025] The main body portion 102 may comprise an anterior wall 112 on an inner part of the curve and a posterior wall 114 (also seen in FIG. 4) on an outer part of the curve. The

anterior wall 112 may face a front of the patient's mouth and the posterior wall 114 may face a back of the patient's mouth. The anterior wall 112 and the posterior wall 114 of the main body portion 102 may be configured in parallel to each other. The anterior wall 112 has a defined shape that may correspond to the defined shape of the posterior wall 114, though the anterior wall 112 may be a different shape than the posterior wall 114 in other examples. The defined shape may be wider at the first end 104 and narrower at the second end 106. In some embodiments, the shape corresponds to a shield shape though the shape may be, for example, a square, a straight line arrow, a rectangle, a star, an oval, a circle, or a shape that generally conforms to the intraoral shape of the patient's mouth. Differently-sized mouthpieces may be provided for differently-sized mouths of adults and children. Part of the shape at the first end 104 may be formed with thicker walls than the rest of the main body portion 102. Such thickening may provide additional stability at the first end 104. When positioned within the mouth of a patient, the anterior wall 112 and the posterior wall 114 are capable of blocking an airway of the patient, while the bite block 101 is positioned between the patient's teeth, the suction connector portion 108 extends from one side of the patient's mouth, and the cheek retractor portion 110 presses against the cheek on the opposite side of the patient's mouth.

[0026] The main body portion 102 may also include openings 140 located on the anterior wall 112 and/or the posterior wall 114. Such openings 140 (e.g., perforations, slit, aperture, etc.) allow for suction of air, fluids, and small debris from the patient's mouth through the openings 140 and into the interior space 126, and into the suction connector portion 108 towards a suction source. The openings 140 may be positioned on a perimeter of the shape of the anterior wall 112 and/or the posterior wall 114. In the same example, the openings 140 may be positioned on either side of the neck 120 on the anterior wall 112 and/or the posterior wall 114. In another example, the openings 140 are apertures. In the same example, the apertures are each the same size, though in other examples some or all of the apertures may be different sizes.

[0027] FIG. 3 is a rear view of the dental mouthpiece shown in FIG 1. As visible in FIG. 3, the suction connector portion 108 may be oval-shaped and also attached to the main body portion 102. The suction connector portion 108 may be formed with thicker walls than the main body portion 102 and configured to attach to a high-suction vacuum adapter and to assist in

transferring water, saliva, and debris from the interior space 126 to the external adapter for removal. The suction connector portion 108 may also include an internal stop to assist in sliding the mouthpiece onto the adapter to a desired depth.

[0028] The superior wall 116 in FIG. 3 may be used herein to refer to the side that rests against a roof of a patient's mouth when placed therein, and the inferior wall 118 may be used to refer to the side that rests against the floor of the patient's mouth. The superior wall 116 and inferior wall 118 may be formed identically, which may allow for the mouthpiece to change orientation such that the superior wall 116 may appear as the inferior wall 118 and vice versa, in the new orientation. When in use, the superior wall 116 and the inferior wall 118 of the main body portion 101 may serve to protect and separate the top of the mouth and the bottom of the mouth/tongue. In addition, the main body portion 101 may also serve to protect the back of the mouth (e.g., throat and airway) from falling debris.

[0029] FIG. 4 is a bottom view of the dental mouthpiece shown in FIG 1. The anterior wall 112 and the posterior wall 114 may be connected to each other at by at least one connector 124. In some embodiments, the suction connector portion 108 may have a cutout 142 (e.g., which may be shaped as a logo, a rectangular notch, a square notch, or a circular notch, or any shaped notch) providing extra interlocking with a corresponding protrusion (e.g., which may also be shaped as a logo, a rectangular protrusion, a square protrusion, or a circular protrusion, or any shaped protrusion) on an external high-suction vacuum adapter.

[0030] The bite block 101 may be reinforced by bite block openings 141 to create cavities in the bite block to result in a more stable bite block. In an embodiment, the bite block openings 141 may be two parallel rectangular openings that open at the bottom of the bite block. The bite block openings 141 may extend up to the suction connector portion 108 but not extending past the thickness of the suction connector portion 108.

[0031] FIG. 5 is a coronal top cross section view of the dental mouthpiece shown in FIG. 1. The main body portion 102 may include the bridge structure 136 that protrudes from the interior surface 135 of the posterior wall 114, as shown in FIG. 5 and also visible in FIGS. 7 and 8. In some embodiments, the bridge structure 136 may follow the shape of a logo (e.g., an arrowhead or shield). The bridge structure may have a gap at the tip of the arrowhead shape,

creating an open arc instead of a point of an arrow. In some embodiments, the bridge structure 136 may be centrally-located in the main body portion 110 of the mouthpiece 100. In some examples, such bridge structure 136 may protrude from the interior surface 135 in a wave shape with bridge crests 137 and bridge troughs 138. In other embodiments, the bridge structure 136 may protrude in the shape of battlements or trapezoids. The bridge crests 137 provide a plurality of contact points that are generally separate from the anterior wall 112. The bridge crests 137 near the opening 146 of the suction connector portion 108 may have a greater height than the bridge crests 137 further from the opening 146, as visible in FIGS. 7 and 8. The bridge crests 137 near the opening 146 of the suction connection portion 108 may also be longer than the bridge crests 137 further away from the suction connection portion 108 as shown later in FIG. 8. The bridge troughs 138 may be substantially flush or extend above the interior surface 135. The bridge crests 137 contact the anterior wall 112 during suction to keep the anterior wall 112 spaced away from the posterior wall 114 during suction, thereby preventing collapse of the anterior wall 112 or the posterior wall 114 into the interior space 126 so that debris and/or water can be evacuated through the interior space 126. Meanwhile, the bridge troughs 138 provide gaps that allow for suction of air, fluids, and small debris through the bridge structure 136. In other examples, the bridge structure 136 may be smooth, may include sharp crests and sharp troughs, circular crests and circular troughs, square crests and square troughs, or shape or combination of shapes of crests and troughs.

[0032] The main body portion 102 may further include a stability bar 143, shown in FIG. 5 and also visible in FIG. 7, that extends from approximately the center of the main body portion 102 toward the cheek retractor portion 110. Such stability bar 143 may protrude from the interior surface 135 of the posterior wall 114 along the longitudinal axis 103. In an embodiment, the stability bar 143 begins from the open arc of the bridge structure 136 and continue along the longitudinal axis 103 towards the second end 106 past the neck 120 and ends before reaching the cheek retractor portion 110. The stability bar 143 may protrude from the interior surface 135 of the posterior wall 114 towards the interior surface 113 of the anterior wall 112. The stability bar 143 may be of any height ranging from the height of the interior space 126 or any height less than the interior space 126. In an embodiment, the stability bar 143 may have attached

connectors 124 at specific locations that may attach the anterior wall 112 to the posterior wall 114. The connectors 124 on the stability bar 143 may assist with retraction, stability, support and curvature of the mouthpiece 100 during suction. In an exemplary embodiment, there may be multiple connectors 124 aligned with the stability bar 143 the stability bar 143, though the stability bar 143 may not be aligned with the at least one connector 124 in other examples.

[0033] FIG. 6 is a side view of the dental mouthpiece shown in FIG. 1. FIG. 6 illustrates the view of the inferior side that rests against the floor of the patient's mouth. The anterior wall 112 and the posterior wall 114 are spaced from each other and define the interior space 126. Other than the at least one connector 124, a stability bar 143, and a bridge structure 136, the interior space 126 is generally open and unobstructed, thereby allowing for suction to flow throughout the interior space 126. The interior space 126 between the anterior wall 112 and the posterior wall 114 generally follows the same defined shape of the anterior wall 112 and the posterior wall 114. In one example, the interior space 126 extends through the neck 120, though in other examples the interior space 126 may not extend through the neck 120. In yet other examples, the interior space 126 extends through the neck 120 and into the cheek retractor portion 120.

[0034] At least one anterior intervening wall 127 may extend from at least one edge 128 of the anterior wall 112 partially towards the posterior wall 114 and may have a thickness that extends from the at least one edge 128 to a mid-point between the anterior wall 112 and the posterior wall 114. The span of such anterior intervening wall 127 therefore may not extend the entire distance between the anterior wall 112 and the posterior wall 114. The thickness of such anterior intervening wall 127 may increase from the cheek retractor portion 110, through the neck 120, and to the first end 104. Such increasing depth may provide for increased rigidity at the first end 104. Such anterior intervening wall 127 may further be ridged in some embodiments, or have a smooth edge in other embodiments. In one example, the anterior intervening wall 127 includes an alternating crest 130 and trough 132. In the illustrated embodiment, the crests 130 are a flat surface and the troughs 132 are a cylindrical cutout surface, though the crests 130 and the troughs 132 may be any shape. In some examples, the crests 130 and the troughs 132 extend the entire depth of the anterior intervening wall 127, though in other examples the crests 130 and/or the troughs 132 may extend partially along the

anterior intervening wall 127. The crests 130 and the troughs 132 may provide further retraction, stability, support and curvature to the mouthpiece 100.

[0035] The posterior wall 114 may have a corresponding at least one posterior intervening wall 134 that extends from at least one edge 133 of the posterior wall 114 and partially extends towards the anterior wall 112. The posterior intervening wall 134 may likewise exhibit ridges that are the same, a mirror image, or different from the anterior intervening wall 127. In one example, the ridges of the anterior intervening wall 127 may be aligned with the ridges of the posterior intervening wall 134, as shown in FIG. 6. In combination, the anterior intervening wall 127 and the posterior intervening wall 134 and their respective aligned ridges may form an open mesh between the anterior wall 112 and the posterior wall 114. Such open mesh may follow the edges 128, 133 of each of the anterior wall 112 and the posterior wall 114 from the first end 104 to the second end 106. The open mesh between the anterior intervening wall 127 and the posterior intervening wall 134 allows for suction of air, fluids, and small debris from patient's mouth, through the mesh into the interior space 126 and into the suction connector portion 108 towards a suction source.

[0036] The anterior intervening wall 127 may join with the posterior intervening wall 134 at the superior wall 116 and the inferior wall 118 at near the suction connector portion 108 of the main body at the first end 104. The anterior intervening wall 127 may also join with the posterior intervening wall 134 at the superior wall 116 and the inferior wall 118 near the cheek retractor portion 110 at the second end 106. In some embodiments, the anterior intervening wall 127 may join with the posterior intervening wall 134 at the cheek retractor portion 110.

[0037] FIG. 7 is a side of the dental mouthpiece shown in FIG. 1 with an anterior wall of the mouthpiece pulled away from a posterior wall of the mouthpiece. The at least one connector 124 may span the distance between the anterior wall 112 and the posterior wall 114 within the interior space 126. In other words, the connector 124 may be attached to an interior surface 135 of the posterior wall 114 and to an interior surface 113 of the anterior wall 112. The at least one connector 124 may provide structural rigidity to the mouthpiece 100 and may be a pillar, column, wall, or the like. In the illustrated example, the at least one connector 124 includes three connectors, each in the shape of a pillar and linearly spaced from each other.

[0038] FIG. 8 is a transverse cross section view of the dental mouthpiece shown in FIG. 1. The bridge crests 137 near the opening 146 of the suction connector portion 108 may have a greater height than the bridge crests 137 further from the opening 146. The bridge crests 137 near the opening 146 of the suction connection portion 108 may also be longer than the bridge crests 137 further away from the suction connection portion 108.

[0039] FIG. 9 is a transverse cross section view of the dental mouthpiece in FIG. 1. FIG 9 illustrates where the suction connector attaches to the main body. As visible in FIG. 9, the suction connector portion 108 may be oval-shaped and also attached to the main body portion 102 in a seamless transition until the main body reaches the bridge structure 136, where the bridge crests 137 and the bridge troughs 138 may partially block the opening of the main body portion 102 near the suction connector portion 108. The bite block 101 is attached on the outside of the suction connector portion 108 such a manner that the bite block does not interrupt the opening of the suction connector potion 108.

[0040] The suction connector portion 108 may include an opening 146 (also shown in FIG. 5), that opens into an interior space 126 of the main body portion 102 to allow for fluid communication between the interior space 126 and the suction connector portion 108. At least one suction connector portion wall 144 may extend from the anterior wall 112 to the posterior wall 114 near the opening 146 of the suction connector portion 108 to prevent collapse of the anterior wall 112 and the posterior wall 114 during suctioning. The at least one suction connector portion wall 144 includes a pair of walls positioned on either side of the opening 146 of the suction connector portion 108.

[0041] The bite block 101 may include bite block crests 147 and bite block troughs 148 on either sides of the bite block to create greater traction and support for the bite block. In an embodiment, the bite block crests 147 and bite block troughs 148 may create jagged shape or wave shape on either sides of the bite block, although the bite block crests 147 and bite block troughs 148 may be in any shape.

[0042] FIG. 10 is a cross section view of an embodiment of the dental mouthpiece shown in FIG. 1 with a wall connector. In this embodiment, the connector 124 connects the anterior wall 112 with the posterior wall 114 at the longitudinal axis 103 as a solid wall. The connector 124

extends from the neck 120 at the second end 106 some distance away from the cheek retractor portion 110 towards the first end 104 along the longitudinal axis 103 and stops near the opening of the bridge structure 136 around the mid-point of the main body portion 102. In other embodiment, the connector 124 may extend along the longitudinal axis 103 and stop anywhere within the interior space 126 of the main body portion.

[0043] FIG. 11 is a longitudinal cross section view of an embodiment of the dental mouthpiece shown in FIG. 1 with column connectors. In this embodiment, the connector 124 connects the anterior wall 112 with the posterior wall 114 at the longitudinal axis 103 as three evenly spaced cylindrical pillars in line with the stability bar 143. A first connector is positioned in the main body portion 102, a second connector is positioned near the neck 120, and a third connector is spaced near the cheek retractor portion 110. The linear spacing of the three connectors may provide additional rigidity to the neck 120, while maintaining a narrow width 122 of the neck 120. In other examples, such connectors 124 may be located in the area where a positioned mouthpiece 100 begins to wrap from one side of the mouth, to the back of the mouth, then to the other side of the mouth, thereby assisting in shaping the mouthpiece 100 to the general intraoral shape of a patient's mouth. In other examples, the at least one connector 124 may include one connector, two connectors, or more than two connectors and each connector may be positioned anywhere on the mouthpiece 100. In one example, the at least one connector 124 is a rib that extends from the main body portion 102, through the neck 120, and to the cheek retractor portion 110.

[0044] The mouthpiece as described herein may be used with a one-piece, autoclavable, high-suction vacuum adapter. Such a high-suction vacuum body adapter may be made of a single homogenous material. Having a single lever design, such a vacuum adapter may function in the same manner as all the current high-suction vacuum evacuators and saliva ejectors in controlling the removal of water, saliva, and debris from the oral cavity to the outside vacuum source. The single lever may be designed to control the removal of water, saliva, and debris from the at least partially enclosed so main body through a single, large evacuation conduit within the suction connector portion.

[0045] While various embodiments have been described above, it should be understood that they have been presented by way of example only, and not limitation. The descriptions are not intended to limit the scope of the invention to the particular forms set forth herein. Thus, the breadth and scope of a preferred embodiment should not be limited by any of the above-described exemplary embodiments. It should be understood that the above description is illustrative and not restrictive. To the contrary, the present descriptions are intended to cover such alternatives, modifications, and equivalents as may be included within the spirit and scope of the invention as defined by the appended claims and otherwise appreciated by one of ordinary skill in the art. The scope of the invention should, therefore, be determined not with reference to the above description, but instead should be determined with reference to the appended claims along with their full scope of equivalents.

CLAIMS

WHAT IS CLAIMED:

1. A dental mouthpiece formed in a curve, the dental mouthpiece comprising:

a main body portion at a central part of the curve having a first end and a second end, the main body portion having an anterior wall inside the curve and a posterior wall outside the curve, the anterior wall and the posterior wall defining an interior space, at least one connector connecting the anterior wall to the posterior wall, at least one anterior intervening wall extending from the anterior wall partially towards the posterior wall, and at least one posterior intervening wall extending from the posterior wall partially towards the anterior wall, the at least one anterior intervening wall and the at least one posterior intervening wall each having alternating crests and troughs;

a suction connector portion connected to the first end, the connector portion connecting the interior space to a vacuum suction source; and

a cheek retractor portion connected to the second end.

2. The mouthpiece of claim 1, wherein the at least one connector is a cylindrical shaped pillar.

3. The mouthpiece of claim 1, wherein the at least one connector is a wall spanning longitudinally in the main body portion in the interior space.

4. The mouthpiece of claim 1, further comprising a bridge structure in the interior space protruding from the posterior wall, wherein the protrusions are battlement-shaped, with spaced crests.

5. The mouthpiece of claim 4, wherein the protrusions near the suction connector is in greater height and length.

6. The mouthpiece of claim 4, wherein spaces between the crests are troughs of the battlement-shape.

7. The mouthpiece of claim 1, wherein the alternating crests and troughs on the anterior intervening wall and the posterior intervening wall are semi-circle shaped.

8. The mouthpiece of claim 1, wherein the anterior intervening wall and the posterior intervening wall have varying heights to maintain integrity of the main body portion.

9. The mouthpiece of claim 1, wherein the troughs of the anterior intervening wall and the posterior intervening wall decrease in size as the troughs approach the cheek retractor portion.

10. The mouthpiece of claim 1, wherein the anterior intervening wall and the posterior intervening wall meet at a point where the suction connector meets the main body.

11. The mouthpiece of claim 1, wherein the anterior intervening wall and the posterior intervening wall meet at a point where the main body meets the cheek retractor portion.

12. The mouthpiece of claim 1, further comprising a bite block integrated to the suction connector portion, wherein the bite block provide additional crush-resistance and decreased compressibility during biting by a patient.

13. The mouthpiece of claim 1, wherein the main body portion, the suction connector portion, and the cheek retractor portion are formed by injection-molding as one piece.

14. The mouthpiece of claim 1, wherein a material that forms the main body, the suction connector portion, and the cheek retractor portion is a flexible, translucent, high heat-resistant, autoclavable silicon-based material.

15. The mouthpiece of claim 1, wherein the posterior wall further includes a stability bar protruding from an interior surface of the posterior wall and along a longitudinal axis of the main body.

16. The mouthpiece of claim 15, wherein the at least one connector lies evenly spaced along the stability bar.

17. The mouthpiece of claim 1, wherein the suction connector portion comprises a cutout corresponding to a protrusion on a vacuum adapter interlocking fit.

18. The mouthpiece of claim 1, where in the suction connector portion connects to a vacuum source, wherein activation of the vacuum source provides suction of fluids from the interior space of the main body.

19. The mouthpiece of claim 18, wherein the activation of the vacuum source draws fluids from an exterior of the main body through the crests and troughs of the anterior intervening wall and the posterior intervening wall, into the interior space of the main body.

20. The mouthpiece of claim 1, wherein the cheek retractor portion includes a surface that applies pressure based on resilience of the cheek retractor portion.

1/10

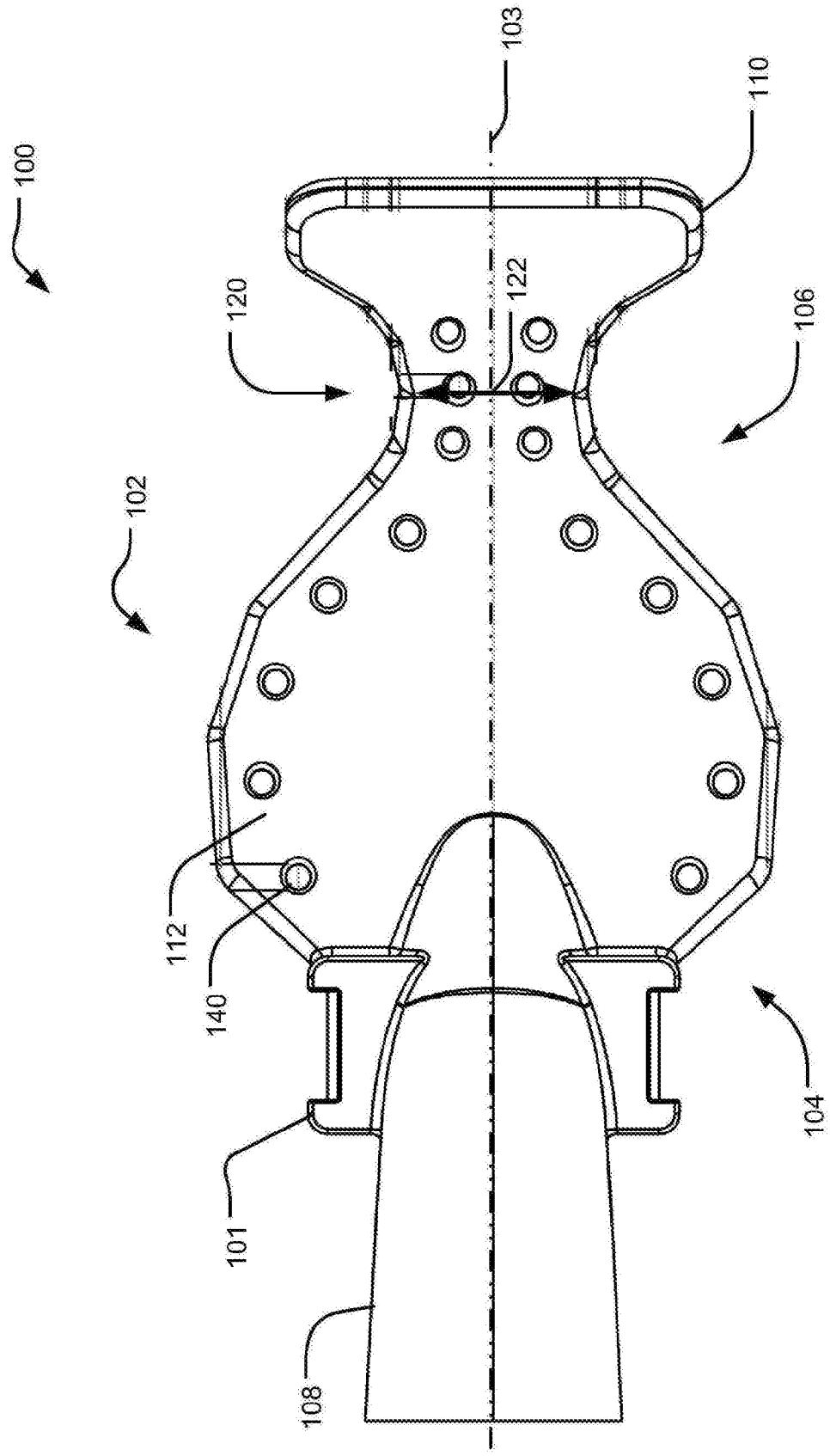

FIG. 1

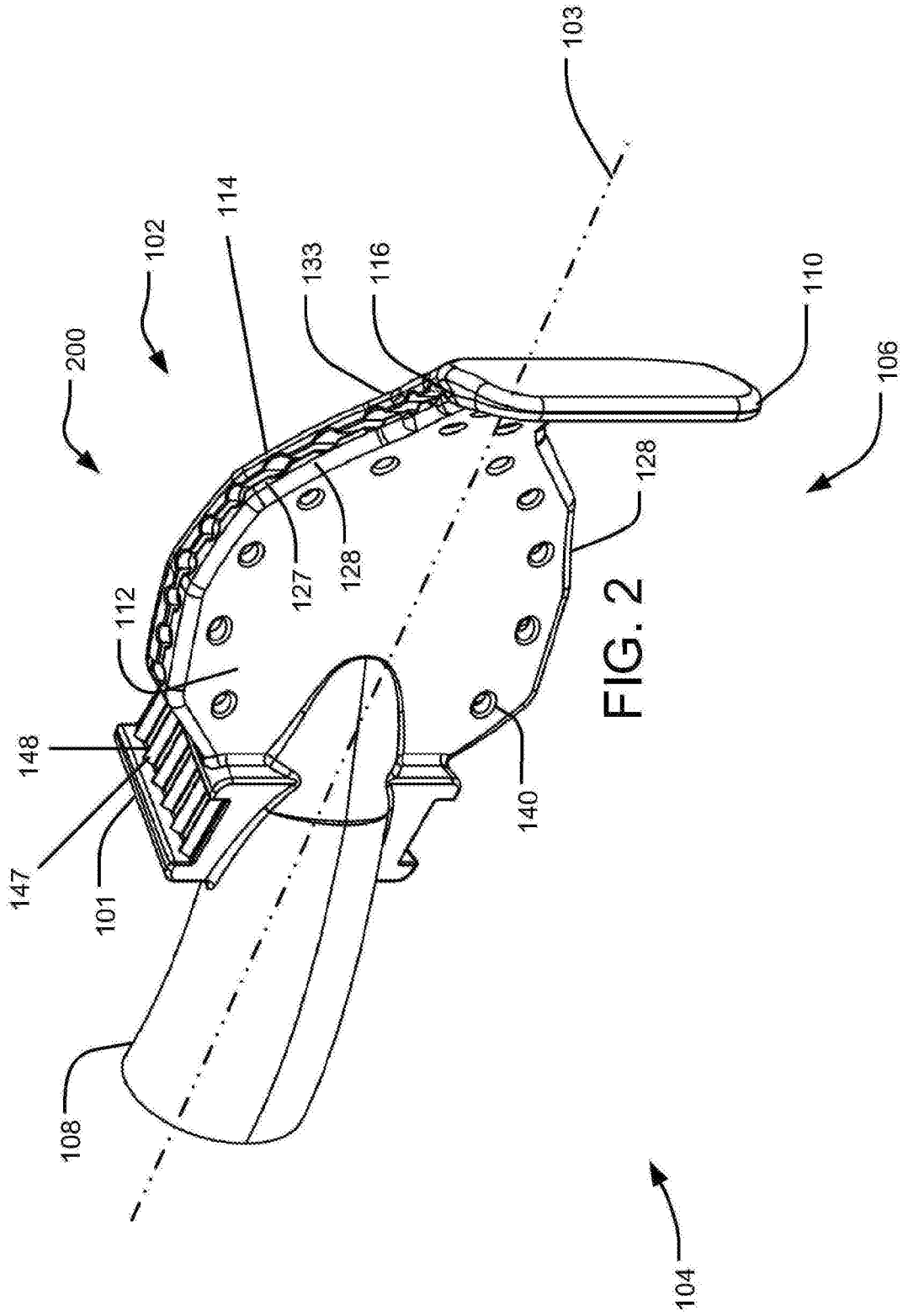
103
114
102
133
116
110
200
106
128
127
128
112
148
147
101
140
108
104

FIG. 2

3/10

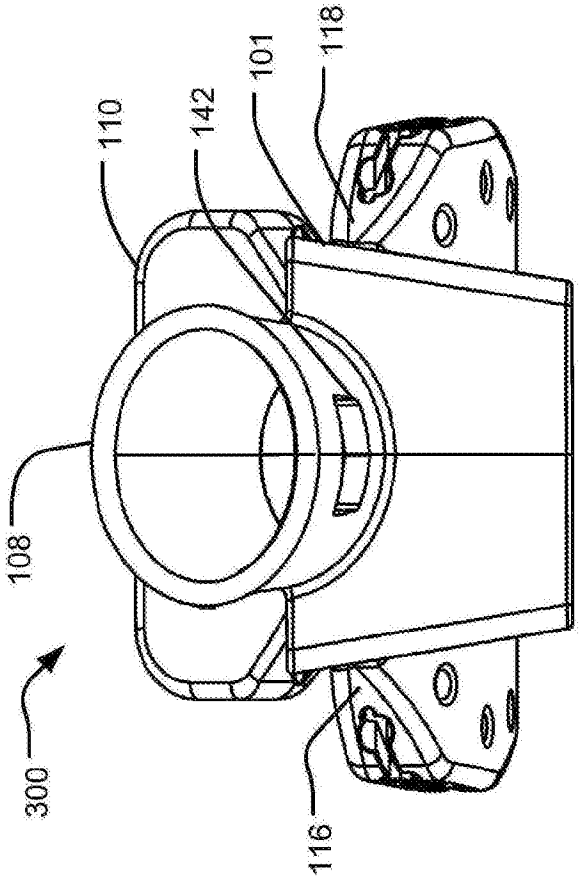

FIG. 3

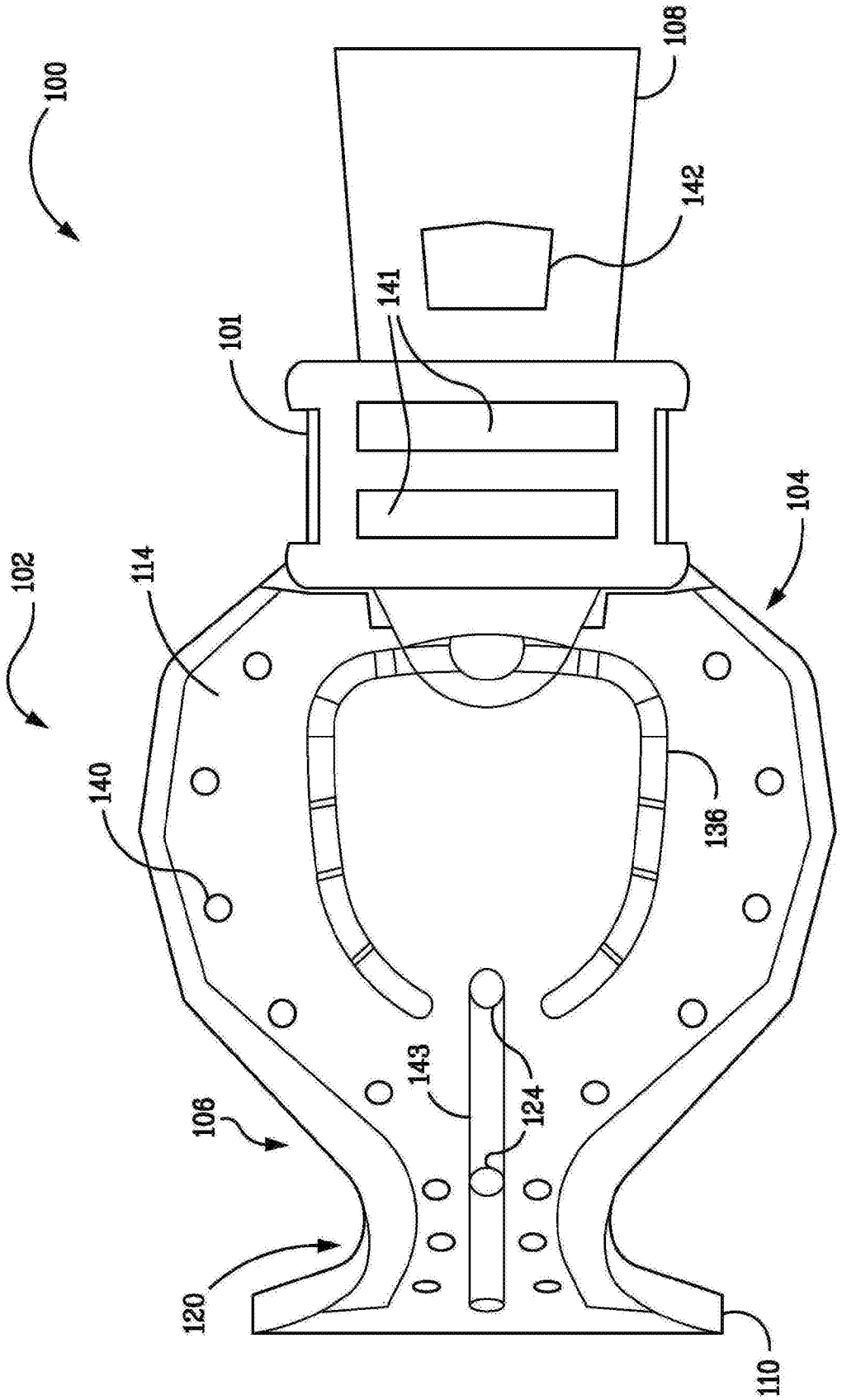

FIG. 4

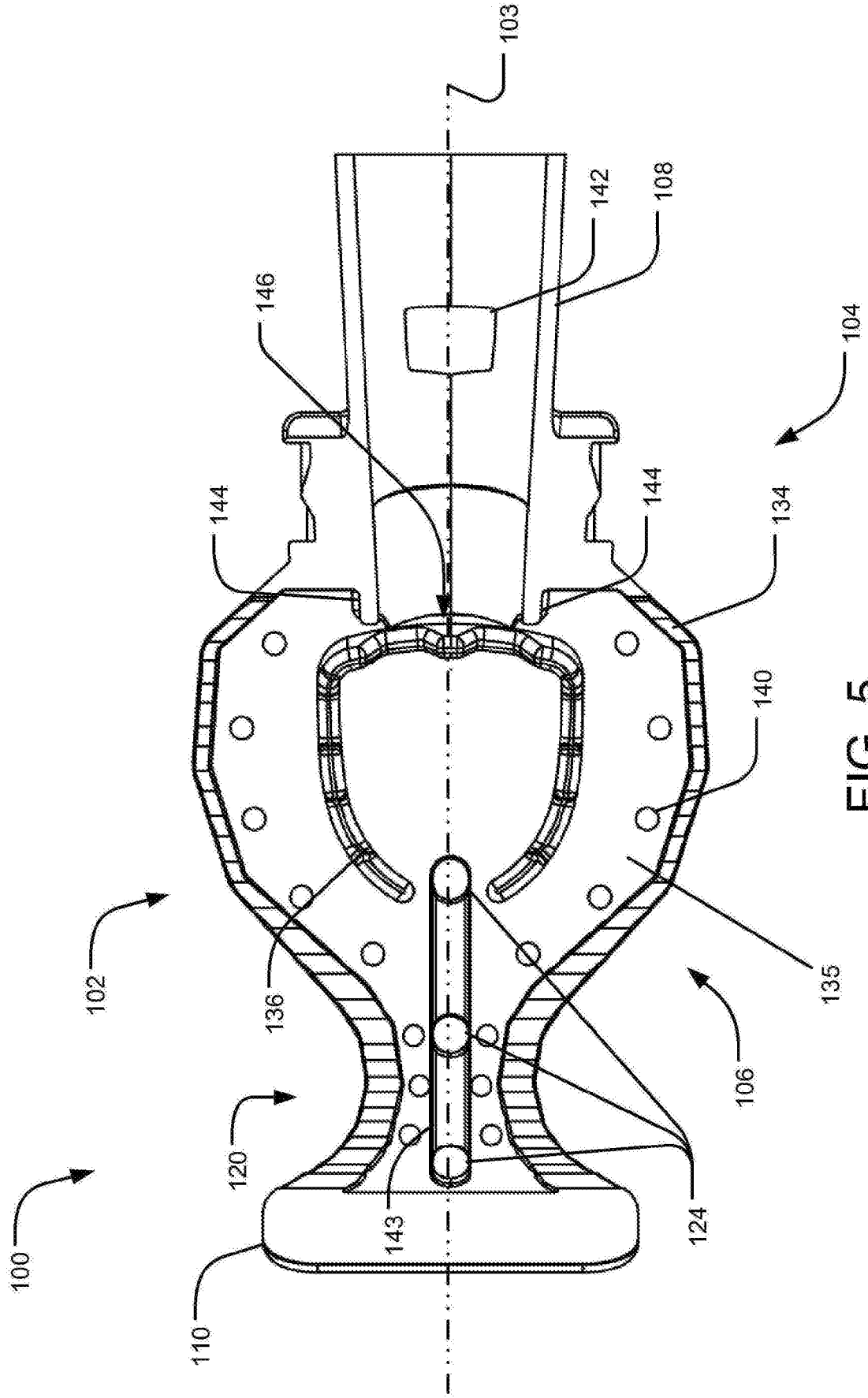
103
142
108
146
104
144
144
134
140
102
136
135
106
120
100
143
124
110

FIG. 5

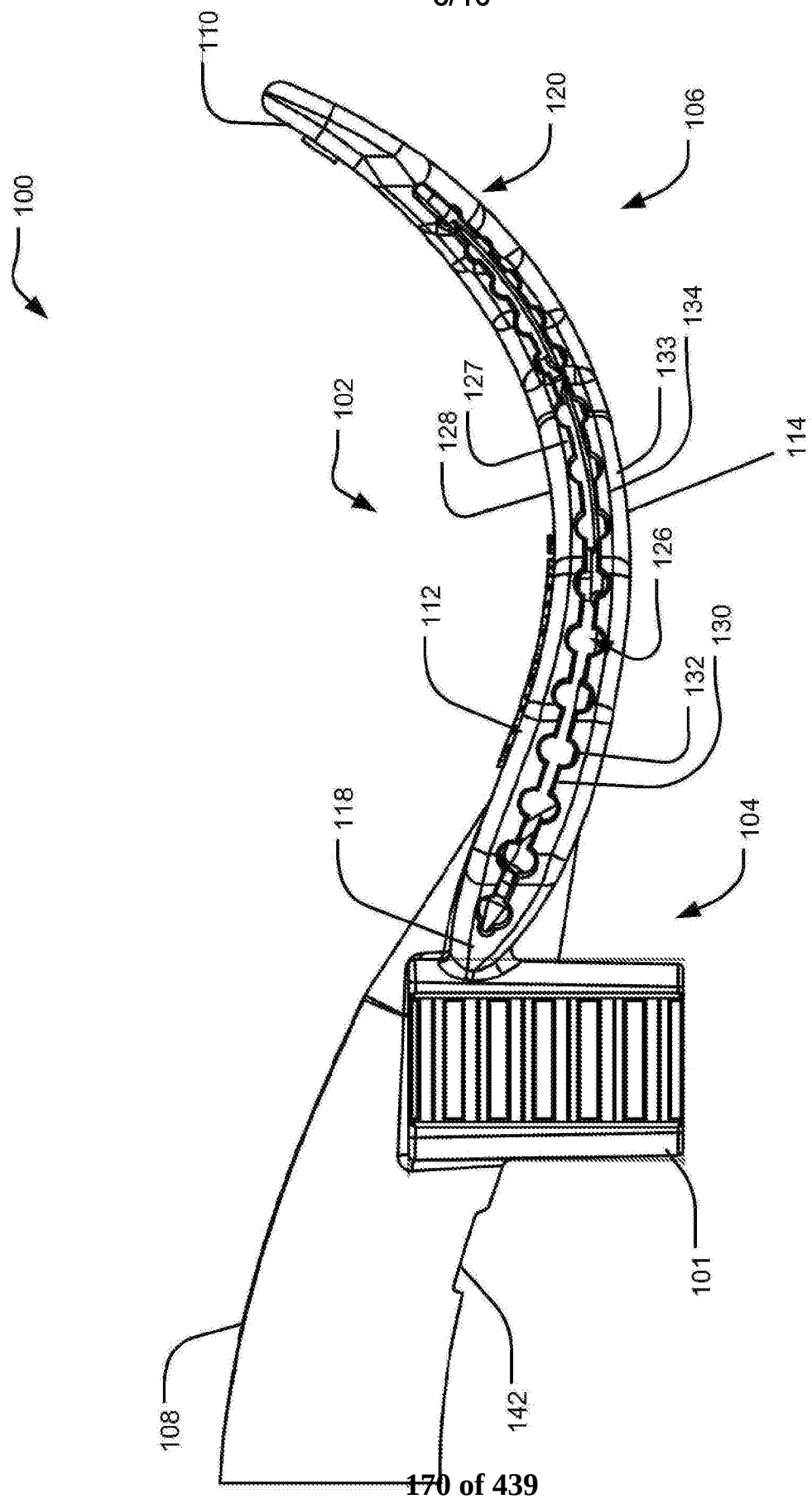
100
110
120
106
134
133
127
102
128
114
126
112
130
132
118
104
101
108
142

FIG. 6

7/10

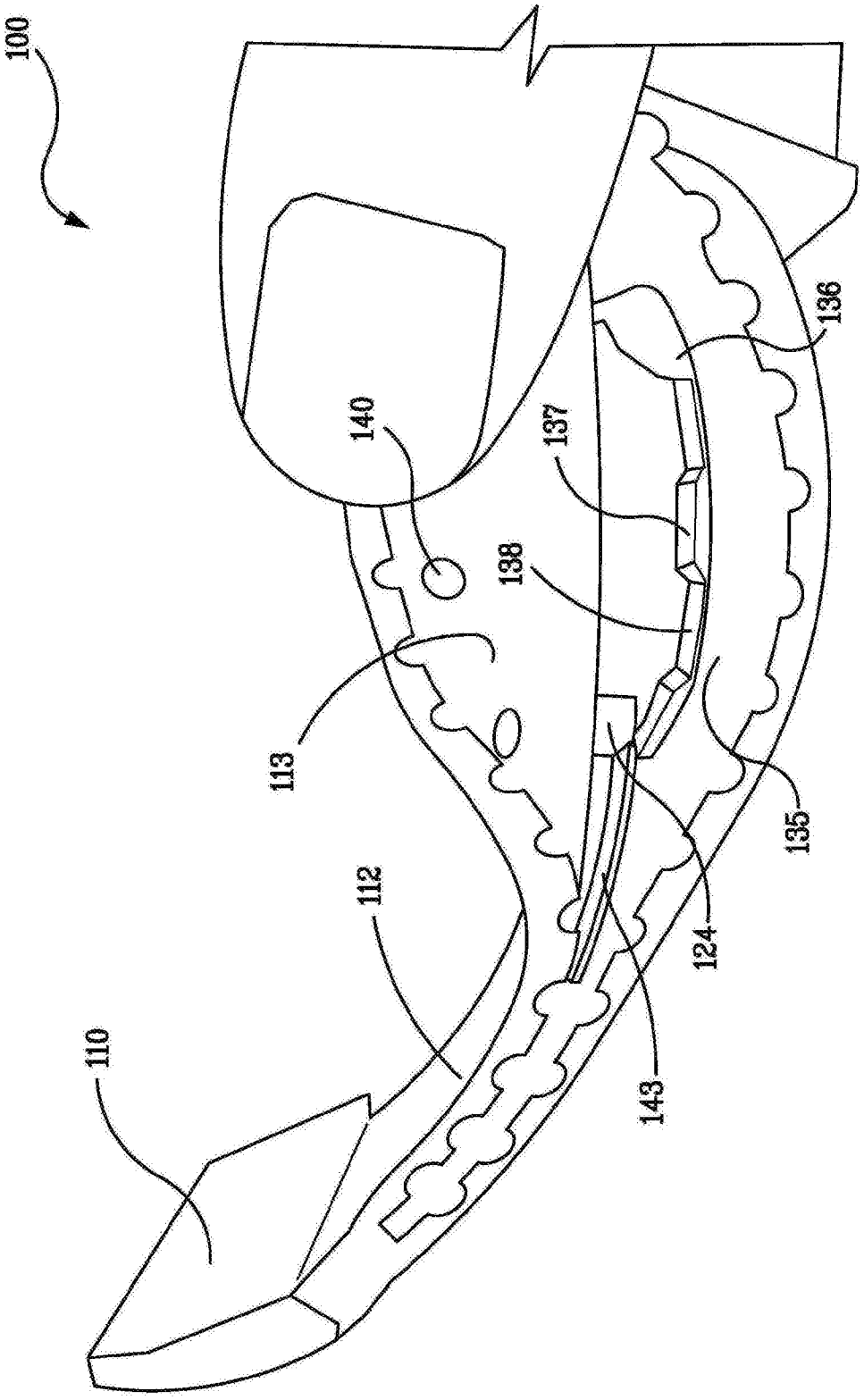

FIG. 7

8/10

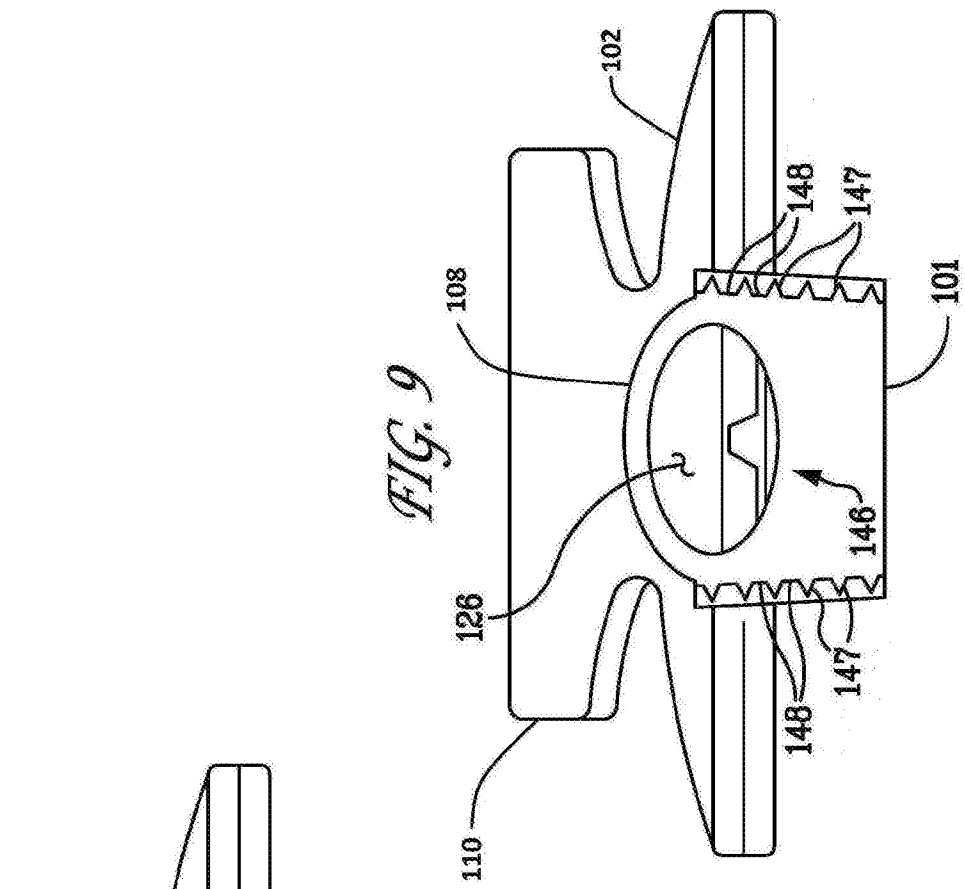

FIG. 9

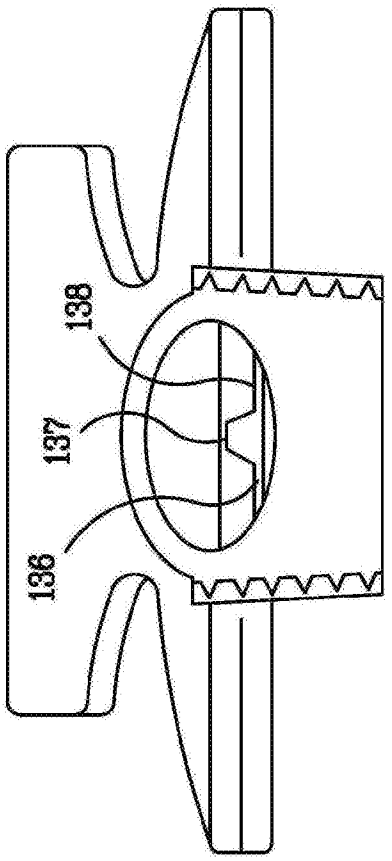

FIG. 8

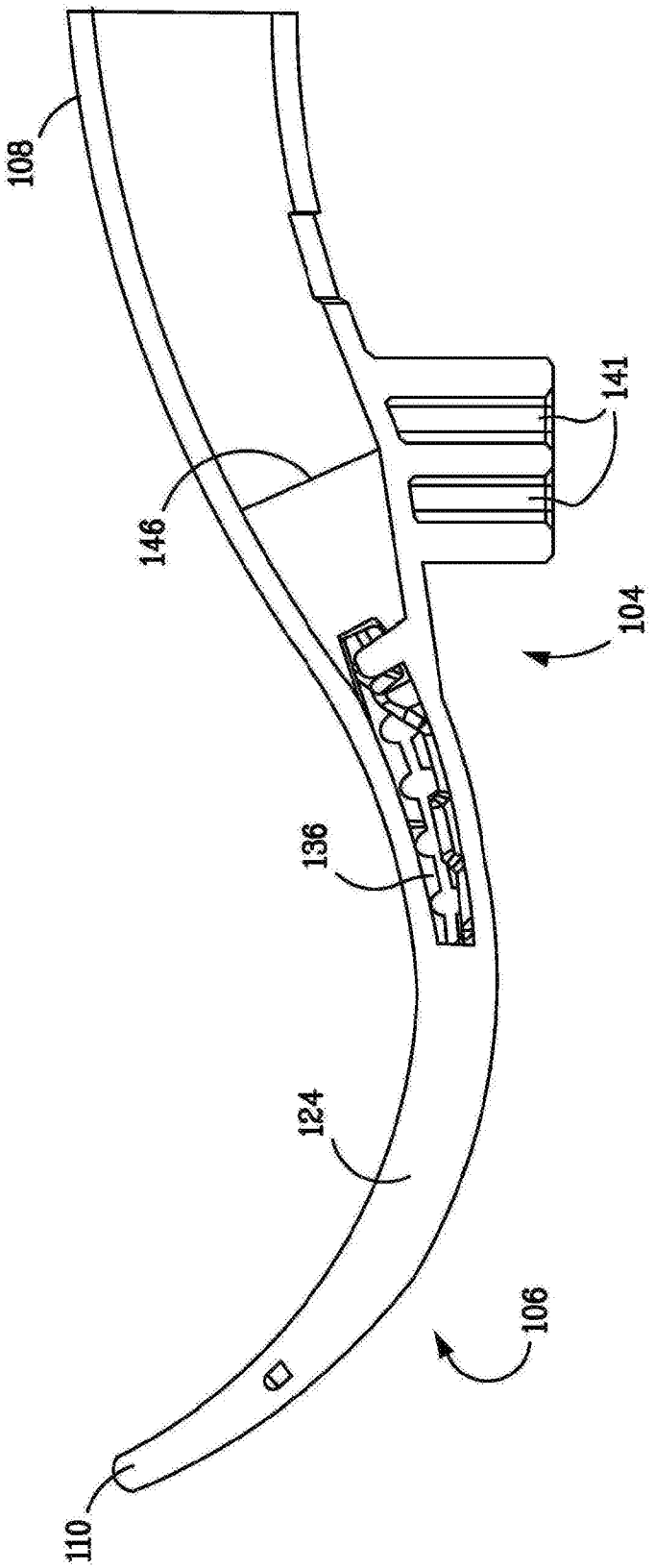

FIG. 10

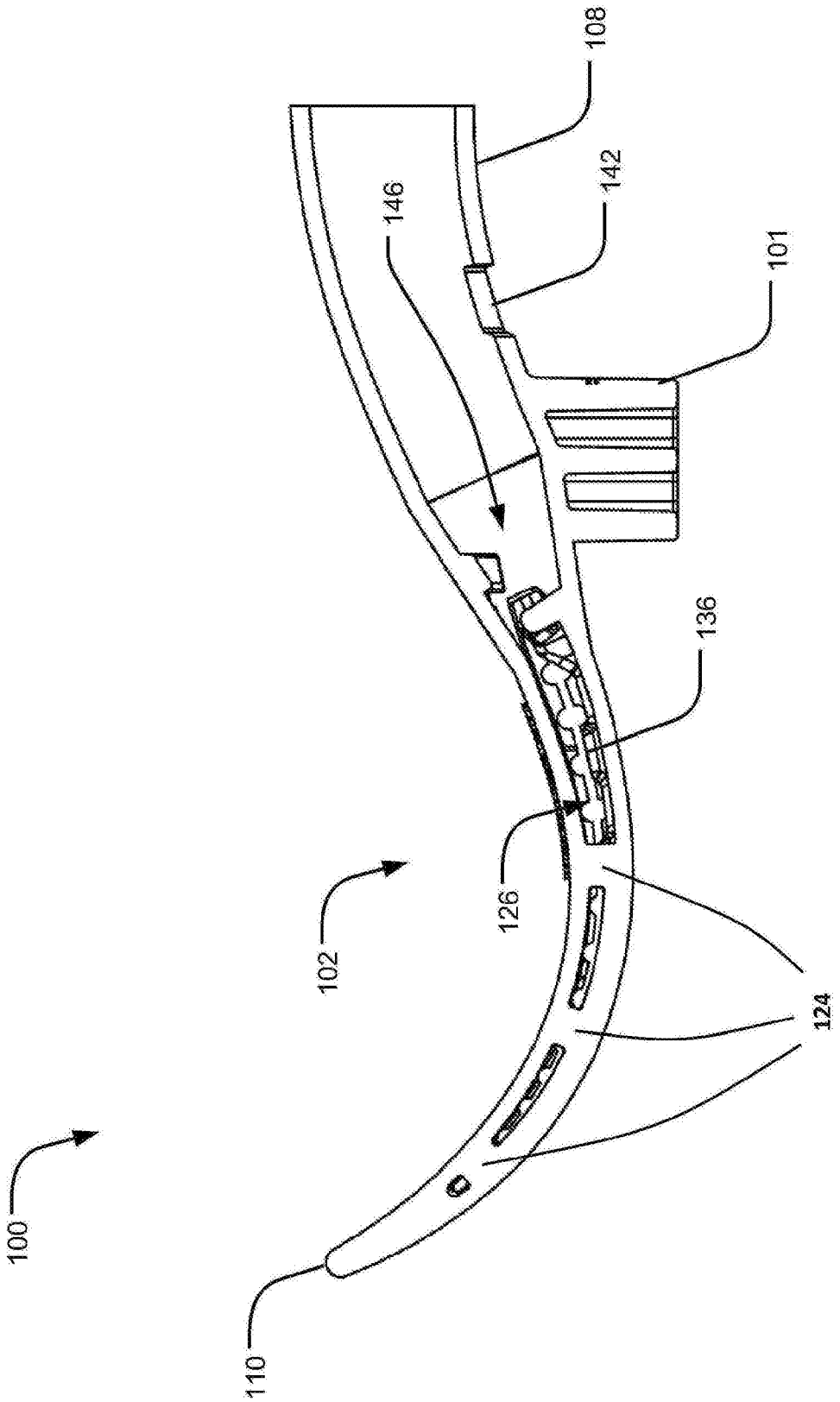

FIG. 11

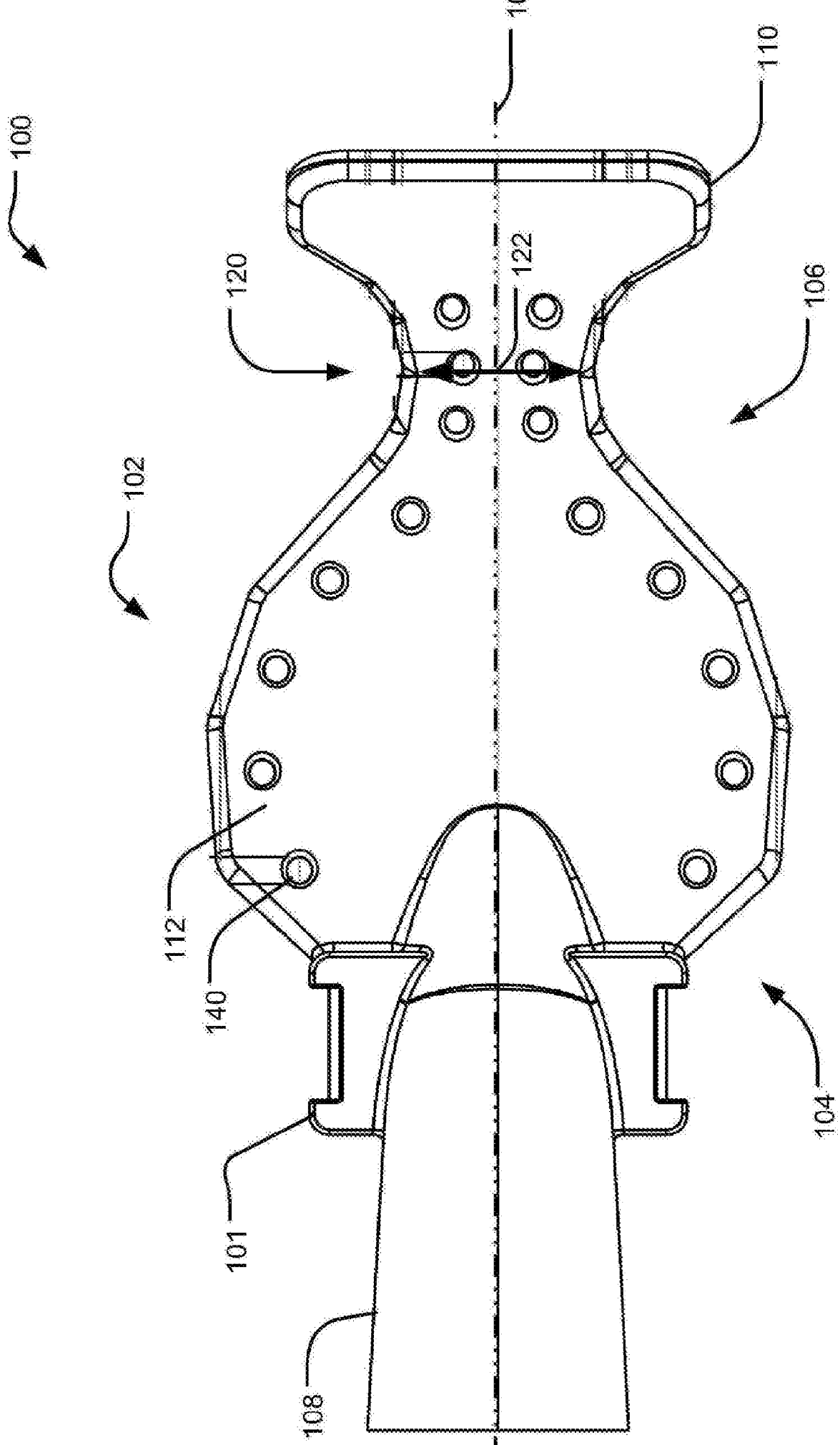

FIG. 1

Espacenet

CN104490483A Self-help oral cavity saliva aspirating and separating device

Applicants: HUANGHUA KANGTIAN MEDICAL DEVICE CO LTD

Inventors: HE QINGXUAN

Classifications:
IPC ***A61C17/06;***

CPC **A61C17/04 (CN);**

Priorities: CN201510013679A 2015-01-12

Application: CN201510013679A·2015-01-12

Publication: CN104490483A·2015-04-08

Published as: CN104490483A;**CN104490483B**

Self-help oral cavity saliva aspirating and separating device

Abstract

The invention discloses a self-help oral cavity saliva aspirating and separating device. The self-help oral cavity saliva aspirating and separating device comprises an aspirating tube, a supporter and a saliva aspirating pad, wherein a tooth support is respectively arranged at two sides of the supporter; a saliva aspirating tube which is communicated from top to bottom is arranged inside the supporter; the saliva aspirating pad comprises a lower pad, an upper pad and an outlet tube, wherein the lower pad and the upper pad are respectively connected with the outlet tube to form an integrated structure; the lower pad and the upper pad are connected through a plurality of connecting pads, a saliva aspirating space is formed between the lower pad and the upper pad; the aspirating tube is connected to the top of the saliva aspirating tube; the saliva aspirating pad is connected to the outlet in the bottom of the saliva aspirating tube through the outlet tube. The self-help oral cavity saliva aspirating and separating device is used for aspirating the liquid in the oral cavity by being connected with the supporter with tooth supports through the flexible saliva aspirating pad through the aspirating tube; the aspirating tube, the supporter and the saliva aspirating pad can freely rotate, so that not only can the saliva aspirating effect of the oral cavity operation be improved, but also the operation comfort of the patient can be improved, thereby effectively improving the diagnosis and treatment efficiency, reducing the diagnosis and treatment time and lowering the pains of the patient.

CN104490483A Self-help oral cavity saliva aspirating and separating device

Data originating from sources other than the EPO may not be accurate, complete, or up to date.

The wording below is an initial machine translation of the original publication. To generate a version using the latest translation technology, go to the original language text and use Patent Translate.

Self-service oral saliva separation device

Technical field

[0001] The invention relates to the technical field of medical instruments, in particular to a self-service oral saliva separation device.

Background technique

Sucker is a medical device commonly used in stomatology. Its function is to suck out saliva and blood in the mouth during the operation to provide a clear medical vision. At present, self-service oral saliva separation devices for medical use are mostly disposable plastic single tubes. It is prone to clogging when the operation time is too long, and a new self-service oral suction saliva separation device needs to be replaced, which affects the progress of the operation.

Summary of the invention

In view of the deficiencies of the prior art, the present invention provides a self-service oral saliva separation device which is novel in structure, convenient to use, and not easily blocked.

The technical solution adopted by the present invention to solve the technical problem thereof is:

The utility model relates to a self-service oral saliva separation device, which comprises a straw, a supporter and a suction pad. A support is arranged on each side of the supporter, and a suction pipe is arranged inside and below the supporter, and the suction pad comprises a lower pad and an upper pad. The pad and the outlet tube, the lower pad and the upper pad are respectively connected with the outlet tube to form an integral structure, and the lower pad and the upper pad are connected by a plurality of connecting pads and form a certain suction space between the lower pad and the upper pad, and the straw is connected At the top of the suction tube, the suction pad is connected through the outlet tube at the inlet of the bottom of the suction tube.

A plurality of arcuate ribs are respectively disposed on the upper and lower sides of the trays on both sides of the supporter.

The bottom pad of the suction pad is provided with a hooking hole, and the bottom pad and the upper pad are respectively provided with a plurality of liquid suction holes.

The working principle of the invention is that the support is fixed on the teeth of the patient's mouth by the trays on both sides, and the suction pad connected with the support is placed inside the mouth, and the straw is connected with the external suction power mechanism, during the operation, The saliva and blood inside the mouth enter the inside of the suction pad, enter the suction tube of the support through the outlet tube of the suction pad, and finally suck out through the straw.

The invention is connected with the supporter with the tray by the flexible suction pad, and then sucks the liquid in the mouth through the straw, and the straw, the supporter and the suction pad can rotate freely, which not only improves the suction effect of the oral surgery. At the same time, it also improves the patient's surgical comfort, effectively improves the diagnosis rate, reduces the diagnosis and treatment time, and reduces the patient's pain.

DRAWINGS

The invention will now be further described with reference to the drawings and embodiments.

Figure 1 is a schematic view of the structure of the present invention;

Figure 2 is a schematic structural view of a support of the present invention;

Figure 3 is a side elevational view of the support of the present invention;

Figure 4 is a schematic view showing the structure of the suction pad of the present invention.

In the figure, 1 straw, 2 supporter, 3 suction pad, 21 suction tube, 22 inlet, 23 tooth holder, 24 curved rib, 31 under pad, 32 upper pad, 33 outlet tube, 34 connection pad, 35 hook Take holes, 36 suction holes.

Detailed ways

As shown in FIG. 1 , FIG. 2 , FIG. 3 and FIG. 4 , a self-service oral saliva separation device comprises a straw 1 , a support 2 and a suction pad 3 , and a tray 23 is respectively arranged on both sides of the support 2 . The support 2 is internally provided with a suction and suction pipe 21 connected up and down. The suction pad 3 includes an lower pad 31, an upper pad 32 and an outlet pipe 33. The lower pad 31 and the upper pad 32 are respectively connected with the outlet pipe 33 to form an integrated structure. The pad 31 and the upper pad 32 are connected by a plurality of connecting pads 34 and form a certain suction space between the lower pad 31 and the upper pad 32. The straw 1 is connected to the top of the suction tube 21, and the suction pad 3 passes through the outlet tube 33. Connected to the inlet 22 at the bottom of the suction tube 21, a plurality of curved ribs 24 are respectively arranged on the upper and lower sides of the trays 23 on both sides of the supporter 2, and a tailing hole 35 is provided at the tail of the lower pad 31 of the suction pad 3, and the lower pad is provided. 31 and a plurality of liquid suction holes 36 are respectively disposed on both sides of the upper pad 32.

The working principle of the invention is that the support 2 is fixed on the teeth of the patient's mouth by the trays 23 on both sides, and the suction pad 3 connected to the support 2 is placed inside the mouth, and the straw 1 is connected to the external suction power mechanism. During the operation, the saliva and blood inside the oral cavity enter the inside of the suction pad 3, enter the suction tube 21 of the holder 2 via the outlet tube 33 of the suction pad 3, and finally suck out through the suction tube 1.

CN104490483A Self-help oral cavity saliva aspirating and separating device

Data originating from sources other than the EPO may not be accurate, complete, or up to date.

The wording below is an initial machine translation of the original publication. To generate a version using the latest translation technology, go to the original language text and use Patent Translate.

1.The invention discloses a self-service oral saliva separation device, which comprises a straw, a supporter and a suction pad. A support is arranged on each side of the supporter, and a suction pipe connected up and down is arranged inside the supporter, and the suction pad comprises the lower part. The pad, the upper pad and the outlet tube, the lower pad and the upper pad are respectively connected with the outlet pipe to form an integral structure, and the lower pad and the upper pad are connected by a plurality of connecting pads and form a certain suction space between the lower pad and the upper pad. The straw is attached to the top of the suction tube, and the suction pad is connected to the inlet of the bottom of the suction tube through the outlet tube.

2.The self-service oral saliva separation device according to claim 1, wherein the upper and lower sides of the support are respectively provided with a plurality of arcuate ribs.

3.The self-service oral saliva separation device according to claim 1, wherein a suction hole is provided in the lower pad tail portion of the suction pad, and a plurality of liquid suction holes are respectively disposed on the lower pad and the upper pad.

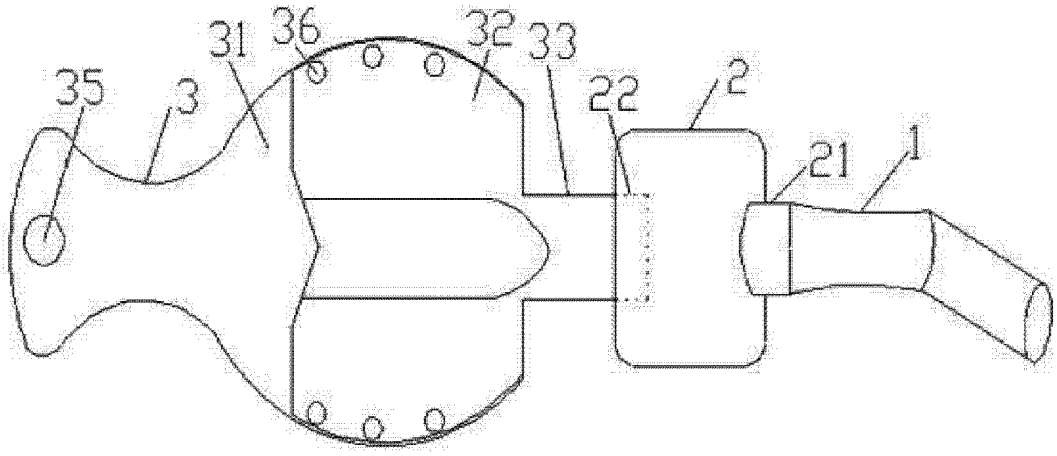

图 1

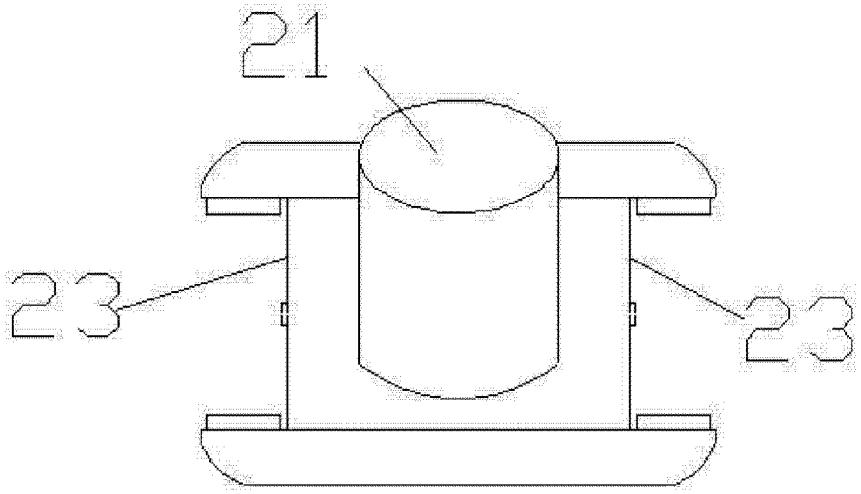

图 2

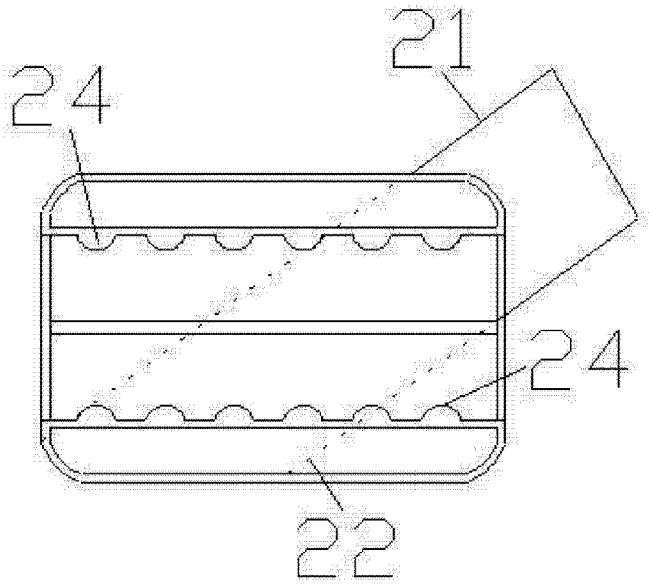

图 3

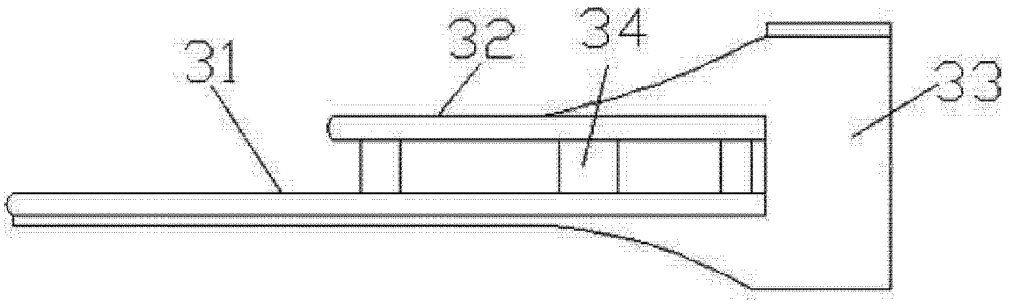

图 4

Espacenet

EP3965637A1 DENTAL MOUTHPIECE

Applicants: DRYSHIELD LLC [US]

Inventors: NGUYEN THIEN [US],PHAM TAM THANH [US],NGUYEN ETHAN [US],NGUYEN LAUREN [US]

Classifications:
IPC ***A61B1/24; A61C17/00; A61C17/06; A61C17/10;***

CPC **A61B1/24 (US); A61C17/08 (EP,US); A61C17/092 (EP); A61C5/90 (US);**

Priorities: US201962846353P 2019-05-10; US2020032228W 2020-05-08

Application: EP20804801A·2020-05-08

Publication: EP3965637A1·2022-03-16

Published as: **AU2020274979A1; BR112021022474A2; CA3139689A1; CN114302667A; CO2021016591A2;** EP3965637A1; **SG112021123l9YA; TW202108088A; US2020352680A1; WO2020231864A1**

DENTAL MOUTHPIECE

Abstract

Abstract not available for EP3965637A1 -- abstract of corresponding document: WO2020231864A1

A dental mouthpiece is provided that may be attached to a high-suction dental adapter for the purpose of assisting the dental staff during dental procedures through chair-side, hands-free suction, and isolation. Such a mouthpiece may comprise a main body portion, a cheek retractor portion, and a suction connector portion. In an embodiment, the main body portion, cheek retractor portion, and suction connector portion may be molded in one piece, preferably by injection molding. The main body portion has an anterior wall inside the curve and a posterior wall outside the curve, and an at least one connector connecting the anterior wall and the posterior wall. The main body portion has an anterior intervening wall and the posterior intervening wall in between the anterior and posterior walls. The anterior intervening wall and the posterior intervening walls have alternating crests and troughs.

(19)中華民國智慧財產局
(12)發明說明書公開本 (11)公開編號：TW 202108088 A
(43)公開日： 中華民國 110 (2021) 年 03 月 01 日

(21)申請案號：109115467 (22)申請日： 中華民國 109 (2020) 年 05 月 08 日
(51)Int. Cl.： *A61C17/00 (2006.01)* *A61C5/90 (2017.01)*
A61B1/24 (2006.01)
(30)優先權：2019/05/10 美國 62/846,353
(71)申請人：美商盾艾煦優有限責任公司 (美國) DRYSHIELD LLC (US)
美國
(72)發明人：阮 天 NGUYEN, THIEN (US) ；潘 譚清 PHAM, TAM THANH (US) ；阮 伊森 NGUYEN, ETHAN (US) ；阮 羅倫 NGUYEN, LAUREN (US)
(74)代理人：陳長文
申請實體審查：無 申請專利範圍項數：20 項 圖式數：11 共 29 頁

(54)名稱

牙科用口腔件

(57)摘要

本發明提供一種牙科用口腔件，其可附接至一高吸力牙科接頭用於在牙科手術期間透過椅側免持式抽吸及隔離來協助牙科工作人員。此一口腔件可包括一主體部分、一頰牽開器部分及一抽吸連接器部分。在一實施例中，該主體部分、該頰牽開器部分及該抽吸連接器部分可較佳地藉由注射模製而模製成一單件。該主體部分具有曲線內部之一前壁及曲線外部之一後壁，且一至少一個連接器連接該前壁及該後壁。該主體部分在該前壁與該後壁之間具有一前中介壁及後中介壁。該前中介壁及該等後中介壁具有交替峰及谷。

A dental mouthpiece is provided that may be attached to a high-suction dental adapter for the purpose of assisting the dental staff during dental procedures through chair-side, hands-free suction, and isolation. Such a mouthpiece may comprise a main body portion, a cheek retractor portion, and a suction connector portion. In an embodiment, the main body portion, cheek retractor portion, and suction connector portion may be molded in one piece, preferably by injection molding. The main body portion has an anterior wall inside the curve and a posterior wall outside the curve, and an at least one connector connecting the anterior wall and the posterior wall. The main body portion has an anterior intervening wall and the posterior intervening wall in between the anterior and posterior walls. The anterior intervening wall and the posterior intervening walls have alternating crests and troughs.

指定代表圖：

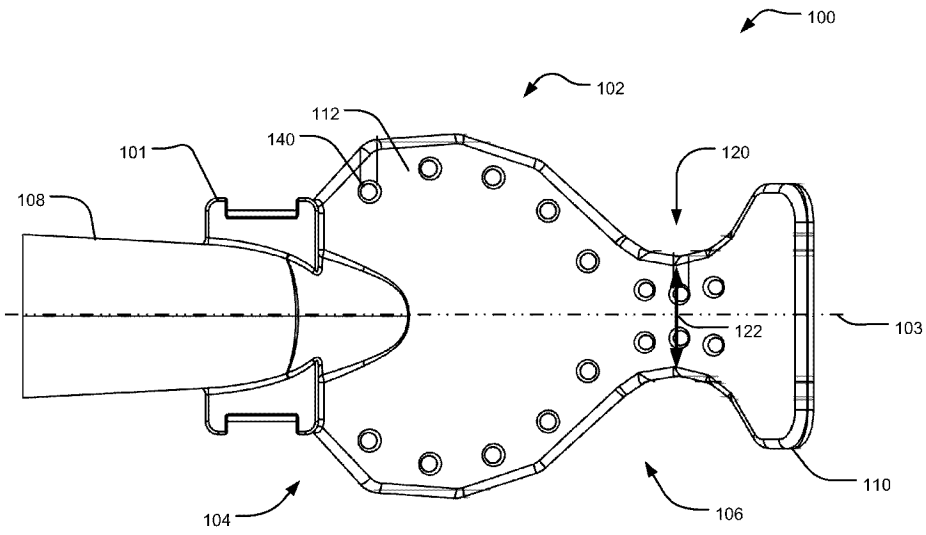

【圖1】

符號簡單說明：

100:牙科用口腔件

101:咬塊

102:主體部分

103:縱向軸

104:第一端

106:第二端

108:抽吸連接器部分

110:頰牽開器部分

112:前壁

120:頸部

122:寬度

140:開口

【發明說明書】

【中文發明名稱】

牙科用口腔件

【英文發明名稱】

DENTAL MOUTHPIECE

【技術領域】

【0001】 本發明大體上係關於牙科用口腔件之領域。更特定言之，本發明係關於口內牙科抽吸及隔離口腔件。

【先前技術】

【0002】 當前，牙科領域中之牙科健康專業人員、潔牙師及牙科助理使用各種口腔件。在過去，一牙科病人已由包括一牙科專業人員及一牙科助理之一傳統兩人團隊治療。此外，牙科治療可由團隊使用許多不同類型之牙科設備及材料提供。此等牙科設備及材料可包含諸如一口內鏡、一咬塊、一低速抽吸噴射器、一高速抽吸噴射器、紗布、棉卷及三角吸唾片(dry angle)之物品。牙科設備之各物品可用於不同目的，但一些可組合地用於一些類型之牙科服務。因而，尋求提供此等牙科服務之一牙科專業人員可需使用此牙科設備之多個物品。因此，牙科助理之一重要作用係協助牙科專業人員協調不同設備及材料之此多個物品之使用。

【0003】 因此，此項技術中需要以一更高效、舒適且安全之方式將牙科服務提供給牙科病人之改良系統及方法。

【發明內容】

【0004】 本發明揭示一種形成為一曲線之牙科用口腔件之實施例。此一口腔件可包括：一主體部分，其在曲線之一中心部分處，具有一第一

端及一第二端；一抽吸連接器部分，其在該第一端處連接至該主體部分；及一頰牽開器部分，其在該第二端處連接至該主體部分。

【0005】 在一些實施例中，該主體部分、該抽吸連接器部分及該頰牽開器部分可較佳地藉由注射模製而模製成一單件。在一例示性實施例中，該口腔件可由撓性、半透明、有利於注射模製、高耐熱且可熱壓之一材料製成。此一材料可包含聚矽氧。由於該口腔件可由一高耐熱且可熱壓之材料製成，所以此一口腔件可再用。

【0006】 該主體部分可包括該曲線內部之一前壁及該曲線外部之一後壁。該前壁及該後壁可界定一內部空間，在該內部空間內至少一個連接器將該前壁連接至該後壁。至少一個前中介壁從該前壁部分地朝向該後壁延伸，且至少一個後中介壁從該後壁部分地朝向該前壁延伸。該等前中介壁及該等後中介壁各具有交替峰及谷。

【圖式簡單說明】

【0007】 圖1係牙科用口腔件之一俯視圖；

【0008】 圖2係圖1中展示之一牙科用口腔件之一等角視圖；

【0009】 圖3係圖1中展示之牙科用口腔件之一後視圖；

【0010】 圖4係圖1中展示之牙科用口腔件之一仰視圖；

【0011】 圖5係圖1中展示之牙科用口腔件之一冠狀頂部橫截面視圖；及

【0012】 圖6係圖1中展示之牙科用口腔件之一側視圖；

【0013】 圖7係圖1中展示之牙科用口腔件之一側，其中口腔件之一前壁從口腔件之一後壁拉離；

【0014】 圖8係圖1中展示之牙科用口腔件在抽吸連接器與主體之間

的交叉點處之一橫向橫截面視圖。

【0015】 圖9係圖1中展示之牙科用口腔件在抽吸連接器與主體之間的交叉點處之一橫向橫截面視圖。

【0016】 圖10係具有一壁連接器之圖1中展示之牙科用口腔件之一實施例之一縱向橫截面視圖。

【0017】 圖11係具有柱連接器之圖1中展示之牙科用口腔件之一實施例之一縱向橫截面視圖。

【實施方式】

相關申請案之交叉參考

【0018】 本申請案主張2019年5月10日申請之標題為「Dental Mouthpiece」之美國臨時專利申請案第62/846,353號之優先權利，該案之揭示內容以引用的方式併入本文中。

【0019】 本發明之實施例可包含一種口腔件，其可附接至一高吸力牙科接頭以用於在牙科手術期間透過椅側免持式抽吸及隔離來協助牙科工作人員的目的。此一口腔件可包括一主體部分、一頰牽開器部分、一抽吸連接器部分、一穩定桿及一咬塊。在一些實施例中，主體部分、頰牽開器部分、抽吸連接器部分、一穩定桿及咬塊(及其子部分)之任何組合可較佳地藉由注射模製而模製成一單件。在一例示性實施例中，口腔件可由撓性、彈性、至少半透明且有利於注射模製之一材料製成。此一材料可包含此項技術中已知的熱塑性彈性體。

【0020】 圖1係牙科用口腔件之一俯視圖。一牙科用口腔件100包含具有一第一端104及與第一端104相對之一第二端106之一主體部分102。一縱向軸103可從第一端104延伸至第二端106。在所繪示實施例中，一抽

吸連接器部分108可耦合至第一端104且一頰牽開器部分110可耦合至第二端106，但在其他實例中，口腔件100可不具有一抽吸連接器部分108及/或一頰牽開器部分110。一咬塊101亦可在主體部分102之第一端104附近整合至抽吸連接器部分108，但咬塊101可定位於抽吸連接器部分108上之任何處。

【0021】 主體部分102可包含從第二端106延伸至頰牽開器部分110之一頸部120。頸部120可具有小於主體部分102之一寬度、頰牽開器部分110之一寬度及/或抽吸連接器部分108之一寬度之一寬度122，但在其他實例中，寬度122可大於主體部分102、頰牽開器部分110及/或抽吸連接器部分108之寬度。

【0022】 在所繪示實施例中，抽吸連接器部分108、頰牽開器部分110、咬塊101及主體部分102被建構為單件，但在其他實例中，抽吸連接器部分108、頰牽開器部分110、咬塊101及/或主體102之各者可為單獨件。例如，在一些實施例中，主體部分102、頰牽開器部分110及抽吸連接器部分108 (及其子部分)可較佳地藉由注射模製而模製為單件且咬塊101可為可附接至抽吸連接器部分108之一單獨件。在一例示性實施例中，口腔件100可由撓性、彈性、半透明且有利於注射模製之一材料製成。此一材料可包含熱塑性彈性體。

【0023】 圖2係圖1中展示之一牙科用口腔件之一等角視圖。如圖2中繪示，主體部分102可塑形為一曲線。由於口腔件100由一撓性且彈性之材料(例如，熱塑性彈性體)製成，所以口腔件100可在放置於一病人之口腔中時彎曲以符合口腔之形狀。當適當定位時，抽吸連接器部分108可從病人口腔之一個側突出，而主體部分102抵靠病人口腔之後部，且頰牽

開器部分110在病人口腔之相對側上壓抵於病人之面頰。

【0024】 頰牽開器部分110可經構形以在病人口腔之與連接部分108自其延伸之側相對之一側上壓抵於一病人之面頰且將病人之面頰遠離病人之牙齒牽開。用於形成口腔件100之材料之撓性容許在放置於病人口腔中時有些彎曲，但材料之彈性進一步容許口腔件100在口腔件100從彎曲釋放時對病人口腔之一部分施加壓力。例如，材料具有足夠彈性以容許頰牽開器部分110以足以使面頰移動遠離病人之牙齒之此壓力壓抵於病人之面頰內部。頰牽開器部分110被繪示為一錘頭遠端區，其可附接至主體部分102。頰牽開器部分110在一些實例中可為實心的，但在其他實例中可為中空的。

【0025】 主體部分102可包括曲線之一內部分上之一前壁112及曲線之一外部分上之一後壁114 (亦在圖4中所見)。前壁112可面向病人口腔之一前部且後壁114可面向病人口腔之一後部。主體部分102之前壁112及後壁114可經構形為彼此平行。前壁112具有可對應於後壁114之界定形狀之一界定形狀，但在其他實例中，前壁112可為不同於後壁114之一形狀。界定形狀可在第一端104處較寬且在第二端106處較窄。在一些實施例中，該形狀對應於一盾形，但該形狀可為例如一方形、一直線箭頭、一矩形、一星形、一橢圓形、一圓形或大體上符合病人口腔之口內形狀之一形狀。可針對成人及兒童之不同大小口腔提供不同大小之口腔件。第一端104處之形狀之部分可形成為具有比主體部分102之其餘部分更厚之壁。此增厚可在第一端104處提供額外穩定性。當定位於一病人之口腔內時，前壁112及後壁114能夠阻塞病人之一氣道，而咬塊101定位於病人牙齒之間，抽吸連接器部分108從病人口腔之一個側延伸，且頰牽開器部分110

在病人口腔之相對側上壓抵於面頰。

【0026】 主體部分102亦可包含定位於前壁112及/或後壁114上之開口140。此等開口140 (例如，穿孔、狹縫、孔隙等)容許將來自病人口腔之空氣、流體及小碎屑抽吸通過開口140且進入至內部空間126中且朝向一抽吸源進入至抽吸連接器部分108中。開口140可定位於前壁112及/或後壁114之形狀之一周邊上。在相同實例中，開口140可定位於前壁112及/或後壁114上之頸部120之任一側上。在另一實例中，開口140係孔隙。在相同實例中，孔隙各具有相同大小，但在其他實例中，一些或全部孔隙可具有不同大小。

【0027】 圖3係圖1中展示之牙科用口腔件之一後視圖。如圖3中可見，抽吸連接器部分108可為橢圓形且亦附接至主體部分102。抽吸連接器部分108可形成為具有比主體部分102更厚之壁且經構形以附接至一高吸力真空接頭且協助將水、唾液及碎屑從內部空間126轉移至外部接頭以進行移除。抽吸連接器部分108亦可包含一內部止檔以協助口腔件滑動至接頭上至一所要深度。

【0028】 圖3中之上壁116可在本文中用於指代當放置於一病人口腔中時靠置於病人口腔頂之側，且下壁118可用於指代靠置於病人口腔底之側。上壁116及下壁118可相同地形成，此可容許口腔件改變定向，使得上壁116可在新定向中表現為下壁118且反之亦然。在使用時，主體部分102之上壁116及下壁118可用於保護且分離口腔頂及口腔底/舌底。另外，主體部分102亦可用於保護口腔後部(例如，咽喉及氣道)以免受掉落碎屑之影響。

【0029】 圖4係圖1中展示之牙科用口腔件之一仰視圖。前壁112及

後壁114可藉由至少一個連接器124彼此連接。在一些實施例中，抽吸連接器部分108可具有一切口142 (例如，其可塑形為一標識、一矩形凹口、一方形凹口或一圓形凹口或任何形狀之凹口)，從而提供與一外部高吸力真空接頭上之一對應突部(例如，其亦可塑形為一標識、一矩形突部、一方形突部或一圓形突部或任何形狀之突部)之額外互鎖。

【0030】 咬塊101可由咬塊開口141強化以在咬塊中產生腔以導致一更穩定咬塊。在一實施例中，咬塊開口141可為在咬塊之底部處敞開之兩個平行矩形開口。咬塊開口141可向上延伸至抽吸連接器部分108但不延伸過抽吸連接器部分108之厚度。

【0031】 圖5係圖1中展示之牙科用口腔件之一冠狀頂部橫截面視圖。主體部分102可包含從外壁114之內表面135突出之橋結構136，如圖5中展示且在圖7及圖8中亦可見。在一些實施例中，橋結構136可遵循一標識(例如，一箭頭或盾)之形狀。橋結構可在箭頭形狀之尖端處具有一間隙，從而產生一開弧而非一箭頭之一點。在一些實施例中，橋結構136可中心地定位於口腔件100之主體部分110中。在一些實例中，此橋結構136可以具有橋峰137及橋谷138之一波形從內表面135突出。在其他實施例中，橋結構136可以城垛或梯形之形狀突出。橋峰137提供大體上與前壁112分離之複數個接觸點。抽吸連接器部分108之開口146附近之橋峰137可具有大於較遠離於開口146之橋峰137之一高度，如圖7及圖8中可見。抽吸連接部分108之開口146附近之橋峰137亦可長於較遠離於抽吸連接部分108之橋峰137，如圖8中隨後展示。橋谷138可為實質上齊平的或在內表面135上方延伸。橋峰137在抽吸期間接觸前壁112以使前壁112在抽吸期間保持與後壁114隔開，藉此防止前壁112或後壁114塌陷至內部空間

126中，使得可透過內部空間126排空碎屑及/或水。同時，橋谷138提供間隙，該等間隙容許透過橋結構136抽吸空氣、流體及小碎屑。在其他實例中，橋結構136可為平滑的、可包含尖峰及尖谷、圓形峰及圓形谷、方形峰及方形谷或峰及谷之形狀或形狀組合。

【0032】 主體部分102可進一步包含一穩定桿143 (在圖5中展示且在圖7中亦可見)，該穩定桿143從主體部分102之大致中心朝向頰牽開器部分110延伸。此穩定桿143可從後壁114之內表面135沿縱向軸103突出。在一實施例中，穩定桿143開始於橋結構136之開弧且沿縱向軸103繼續朝向第二端106經過頸部120且在到達頰牽開器部分110之前終止。穩定桿143可從後壁114之內表面135朝向前壁112之內表面113突出。穩定桿143可具有內部空間126之高度範圍內之任何高度或小於內部空間126之任何高度。在一實施例中，穩定桿143可在特定位置處具有經附接連接器124，該等經附接連接器124可將前壁112附接至後壁114。穩定桿143上之連接器124可在抽吸期間協助口腔件100之牽開、穩定、支撐及彎曲。在一例示性實施例中，多個連接器124可與穩定桿143對準，但在其他實例中，穩定桿143可不與至少一個連接器124對準。

【0033】 圖6係圖1中展示之牙科用口腔件之一側視圖。圖6繪示靠置於病人口腔底之下側之視圖。前壁112及後壁114彼此間隔且界定內部空間126。除至少一個連接器124、一穩定桿143及一橋結構136以外，內部空間126大體上敞開且無障礙，藉此容許吸力流動遍及內部空間126。前壁112與後壁114之間的內部空間126大體上遵循前壁112及後壁114之相同界定形狀。在一個實例中，內部空間126延伸穿過頸部120，但在其他實例中，內部空間126可不延伸穿過頸部120。在又其他實例中，內部空

間126延伸穿過頸部120且進入至頰牽開器部分120中。

【0034】 至少一個前中介壁127可從前壁112之至少一個邊緣128部分地朝向後壁114延伸且可具有從至少一個邊緣128延伸至前壁112與後壁114之間的一中點之一厚度。因此，此前中介壁127之跨度可不延伸前壁112與後壁114之間的整個距離。此前中介壁127之厚度可從頰牽開器部分110通過頸部120增加至第一端104。此增加深度可在第一端104處提供增加剛性。此前中介壁127可在一些實施例中進一步成脊狀或在其他實施例中具有一平滑邊緣。在一個實例中，前中介壁127包含一交替峰130及谷132。在所繪示實施例中，峰130係一平坦表面且谷132係一圓柱形切口表面，但峰130及谷132可為任何形狀。在一些實例中，峰130及谷132延伸前中介壁127之整個深度，但在其他實例中，峰130及/或谷132可部分地沿前中介壁127延伸。峰130及谷132可為口腔件100提供進一步牽開、穩定、支撐及彎曲。

【0035】 後壁114可具有從後壁114之至少一個邊緣133延伸且部分地朝向前壁112延伸之一對應至少一個後中介壁134。後中介壁134可同樣展現與前中介壁127相同、一鏡像或不同之脊。在一個實例中，前中介壁127之脊可與後中介壁134之脊對準，如圖6中展示。組合地，前中介壁127及後中介壁134及其等各自對準脊可在前壁112與後壁114之間形成一開孔網眼(open mesh)。此開孔網眼可跟隨前壁112及後壁114之各者之邊緣128、133從第一端104至第二端106。前中介壁127與後中介壁134之間的開孔網眼容許將來自病人口腔之空氣、流體及小碎屑抽吸通過網眼至內部空間126中且朝向一抽吸源進入至抽吸連接器部分108中。

【0036】 前中介壁127可在第一端104處之主體之抽吸連接器部分

108附近之上壁116及下壁118處與後中介壁134接合。前中介壁127亦可在第二端106處之頰牽開器部分110附近之上壁116及下壁118處與後中介壁134接合。在一些實施例中，前中介壁127可在頰牽開器部分110處與後中介壁134接合。

【0037】 圖7係圖1中展示之牙科用口腔件之一側，其中口腔件之一前壁從口腔件之一後壁拉離。至少一個連接器124可橫跨內部空間126內之前壁112與後壁114之間的距離。換言之，連接器124可附接至後壁114之一內表面135及前壁112之一內表面113。至少一個連接器124可為口腔件100提供結構剛性且可為一支柱、柱、壁或類似物。在所繪示實例中，至少一個連接器124包含三個連接器，各具有一支柱之形狀且彼此線性地間隔。

【0038】 圖8係圖1中展示之牙科用口腔件之一橫向橫截面視圖。抽吸連接器部分108之開口146附近之橋峰137可具有大於較遠離於開口146之橋峰137之一高度。抽吸連接部分108之開口146附近之橋峰137亦可長於較遠離於抽吸連接部分108之橋峰137。

【0039】 圖9係圖1中之牙科用口腔件之一橫向橫截面視圖。圖9繪示抽吸連接器附接至主體之處。如圖9中可見，抽吸連接器部分108可為橢圓形且亦以一無縫過渡附接至主體部分102直至主體到達橋結構136，其中橋峰137及橋谷138可部分地阻擋抽吸連接器部分108附近之主體部分102之開口。咬塊101附接在抽吸連接器部分108之外部上，使得咬塊並不中斷抽吸連接器部分108之開口。

【0040】 抽吸連接器部分108可包含一開口146 (圖5中亦展示)，該開口146通向主體部分102之一內部空間126以容許內部空間126與抽吸連

接器部分108之間的流體連通。至少一個抽吸連接器部分壁144可在抽吸連接器部分108之開口146附近從前壁112延伸至後壁114以防止前壁112及後壁114在抽吸期間塌陷。至少一個抽吸連接器部分壁144包含定位於抽吸連接器部分108之開口146之任一側上之一對壁。

【0041】 咬塊101可包含咬塊之任一側上之咬塊峰147及咬塊谷148以為咬塊產生較大牽引力及支撐。在一實施例中，咬塊峰147及咬塊谷148可在咬塊之任一側上產生鋸齒形或波形，但咬塊峰147及咬塊谷148可具有任何形狀。

【0042】 圖10係具有一壁連接器之圖1中展示之牙科用口腔件之一實施例之一橫截面視圖。在此實施例中，連接器124在縱向軸103處連接前壁112與後壁114作為一實心壁。連接器124沿縱向軸103從第二端106處之頸部120遠離於頰牽開器部分110朝向第一端104延伸一段距離且在圍繞主體部分102之中點之橋結構136之開口附近停止。在另一實施例中，連接器124可沿縱向軸103延伸且在主體部分之內部空間126內之任何處停止。

【0043】 圖11係具有柱連接器之圖1中展示之牙科用口腔件之一實施例之一縱向橫截面視圖。在此實施例中，連接器124在縱向軸103處連接前壁112與後壁114作為與穩定桿143成一線之三個均勻間隔圓柱形支柱。一第一連接器定位於主體部分102中，一第二連接器定位於頸部120附近，且一第三連接器間隔在頰牽開器部分110附近。三個連接器之線性間隔可為頸部120提供額外剛性，同時維持頸部120之一窄寬度122。在其他實例中，此等連接器124可定位於其中一經定位口腔件100開始從口腔之一個側繞至口腔後部，接著繞至口腔之另一側，藉此協助將口腔件100

塑形為一病人口腔之一大致口內形狀之區域中。在其他實例中，至少一個連接器124可包含一個連接器、兩個連接器或兩個以上連接器且各連接器可定位於口腔件100上之任何處。在一個實例中，至少一個連接器124係從主體部分102延伸穿過頸部120至頰牽開器部分110之一肋部。

【0044】 如本文中描述之口腔件可與一單件式可熱壓高吸力真空接頭一起使用。此一高吸力真空體接頭可由一單一均質材料製成。在具有一單桿設計的情況下，此一真空接頭可以相同於所有當前高吸力真空抽吸器及排涎器之方式運作以控制將來自口腔之水、唾液及碎屑移除至外部真空源。單桿可經設計以控制將水、唾液及碎屑從至少部分地圍封之主體透過抽吸連接器部分內之一單一大排空導管移除。

【0045】 雖然上文已描述各種實施例，但應理解，其等僅藉由實例呈現且非限制性。該等描述不旨在將本發明之範疇限於本文中闡述之特定形式。因此，一較佳實施例之範圍及範疇不應限於上文描述之例示性實施例之任一者。應理解，上述描述係闡釋性且非限制性。相反地，本描述旨在涵蓋如可包含於由隨附發明申請專利範圍定義且以其他方式由一般技術者瞭解之本發明之精神及範疇內之此等替代方案、修改及等效物。因此，本發明之範疇不應參考上文描述來判定，而代替地應參考隨附發明申請專利範圍連同其等之等效物之完整範疇來判定。

【符號說明】

【0046】

100: 牙科用口腔件

101: 咬塊

102: 主體部分

103: 縱向軸

104: 第一端

106: 第二端

108: 抽吸連接器部分

110: 頰牽開器部分

112: 前壁

113: 內表面

114: 後壁

116: 上壁

118: 下壁

120: 頸部

122: 寬度

124: 連接器

126: 內部空間

127: 前中介壁

128: 邊緣

130: 峰

132: 谷

133: 邊緣

134: 後中介壁

135: 內表面

136: 橋結構

137: 橋峰

138: 橋谷

140: 開口

141: 咬塊開口

142: 切口

143: 穩定桿

144: 抽吸連接器部分壁

146: 開口

147: 咬塊峰

148: 咬塊谷

202108088

【發明摘要】

【中文發明名稱】

牙科用口腔件

【英文發明名稱】

DENTAL MOUTHPIECE

【中文】

本發明提供一種牙科用口腔件，其可附接至一高吸力牙科接頭用於在牙科手術期間透過椅側免持式抽吸及隔離來協助牙科工作人員。此一口腔件可包括一主體部分、一頰牽開器部分及一抽吸連接器部分。在一實施例中，該主體部分、該頰牽開器部分及該抽吸連接器部分可較佳地藉由注射模製而模製成一單件。該主體部分具有曲線內部之一前壁及曲線外部之一後壁，且一至少一個連接器連接該前壁及該後壁。該主體部分在該前壁與該後壁之間具有一前中介壁及後中介壁。該前中介壁及該等後中介壁具有交替峰及谷。

【英文】

A dental mouthpiece is provided that may be attached to a high-suction dental adapter for the purpose of assisting the dental staff during dental procedures through chair-side, hands-free suction, and isolation. Such a mouthpiece may comprise a main body portion, a cheek retractor portion, and a suction connector portion. In an embodiment, the main body portion, cheek retractor portion, and suction connector portion may be molded in one piece, preferably by injection molding. The main body portion has an anterior wall inside the curve and a posterior wall outside

the curve, and an at least one connector connecting the anterior wall and the posterior wall. The main body portion has an anterior intervening wall and the posterior intervening wall in between the anterior and posterior walls. The anterior intervening wall and the posterior intervening walls have alternating crests and troughs.

【指定代表圖】

圖1

【代表圖之符號簡單說明】

100: 牙科用口腔件

101: 咬塊

102: 主體部分

103: 縱向軸

104: 第一端

106: 第二端

108: 抽吸連接器部分

110: 頰牽開器部分

112: 前壁

120: 頸部

122: 寬度

140: 開口

【發明申請專利範圍】

【請求項1】

一種形成為一曲線之牙科用口腔件，該牙科用口腔件包括：

一主體部分，其在該曲線之一中心部分處，具有一第一端及一第二端，該主體部分具有該曲線內部之一前壁及該曲線外部之一後壁，該前壁及該後壁界定一內部空間，至少一個連接器將該前壁連接至該後壁，至少一個前中介壁從該前壁部分地朝向該後壁延伸，且至少一個後中介壁從該後壁部分地朝向該前壁延伸，該至少一個前中介壁及該至少一個後中介壁各具有交替峰及谷；

一抽吸連接器部分，其連接至該第一端，該連接器部分將該內部空間連接至一真空抽吸源；及

一頰牽開器部分，其連接至該第二端。

【請求項2】

如請求項1之口腔件，其中該至少一個連接器係一圓柱形支柱。

【請求項3】

如請求項1之口腔件，其中該至少一個連接器係在該內部空間中之該主體部分中縱向橫跨之一壁。

【請求項4】

如請求項1之口腔件，其進一步包括從該後壁突出之該內部空間中之一橋結構，其中該等突部係具有間隔峰之城垛形。

【請求項5】

如請求項4之口腔件，其中該抽吸連接器附近之該等突部具有較大高度及長度。

【請求項6】

如請求項4之口腔件，其中該等峰之間的空間係該城垛形之谷。

【請求項7】

如請求項1之口腔件，其中該前中介壁及該後中介壁上之該等交替峰及谷係半圓形的。

【請求項8】

如請求項1之口腔件，其中該前中介壁及該後中介壁具有變化高度以維持該主體部分之完整性。

【請求項9】

如請求項1之口腔件，其中該前中介壁及該後中介壁之該等谷在該等谷接近該頰牽開器部分時大小減小。

【請求項10】

如請求項1之口腔件，其中該前中介壁及該後中介壁在其中該抽吸連接器與該主體相接之一點處相接。

【請求項11】

如請求項1之口腔件，其中該前中介壁及該後中介壁在其中該主體與該頰牽開器部分相接之一點處相接。

【請求項12】

如請求項1之口腔件，其進一步包括整合至該抽吸連接器部分之一咬塊，其中該咬塊在由一病人咬住期間提供額外抗壓性及減小壓縮性。

【請求項13】

如請求項1之口腔件，其中該主體部分、該抽吸連接器部分及該頰牽開器部分藉由注射模製形成為一單件。

【請求項14】

如請求項1之口腔件，其中形成該主體、該抽吸連接器部分及該頰牽開器部分之一材料係一撓性半透明高耐熱可熱壓矽基材料。

【請求項15】

如請求項1之口腔件，其中該後壁進一步包含從該後壁之一內表面突出且沿該主體之一縱向軸之一穩定桿。

【請求項16】

如請求項15之口腔件，其中該至少一個連接器沿該穩定桿均勻地間隔。

【請求項17】

如請求項1之口腔件，其中該抽吸連接器部分包括對應於一真空接頭互鎖配合上之一突部之一切口。

【請求項18】

如請求項1之口腔件，其中該抽吸連接器部分連接至一真空源，其中該真空源之啟動提供從該主體之該內部空間之流體抽吸。

【請求項19】

如請求項18之口腔件，其中該真空源之該啟動將流體從該主體之一外部通過該前中介壁及該後中介壁之該等峰及谷抽取至該主體之該內部空間中。

【請求項20】

如請求項1之口腔件，其中該頰牽開器部分包含基於該頰牽開器部分之彈性施加壓力之一表面。

【發明圖式】

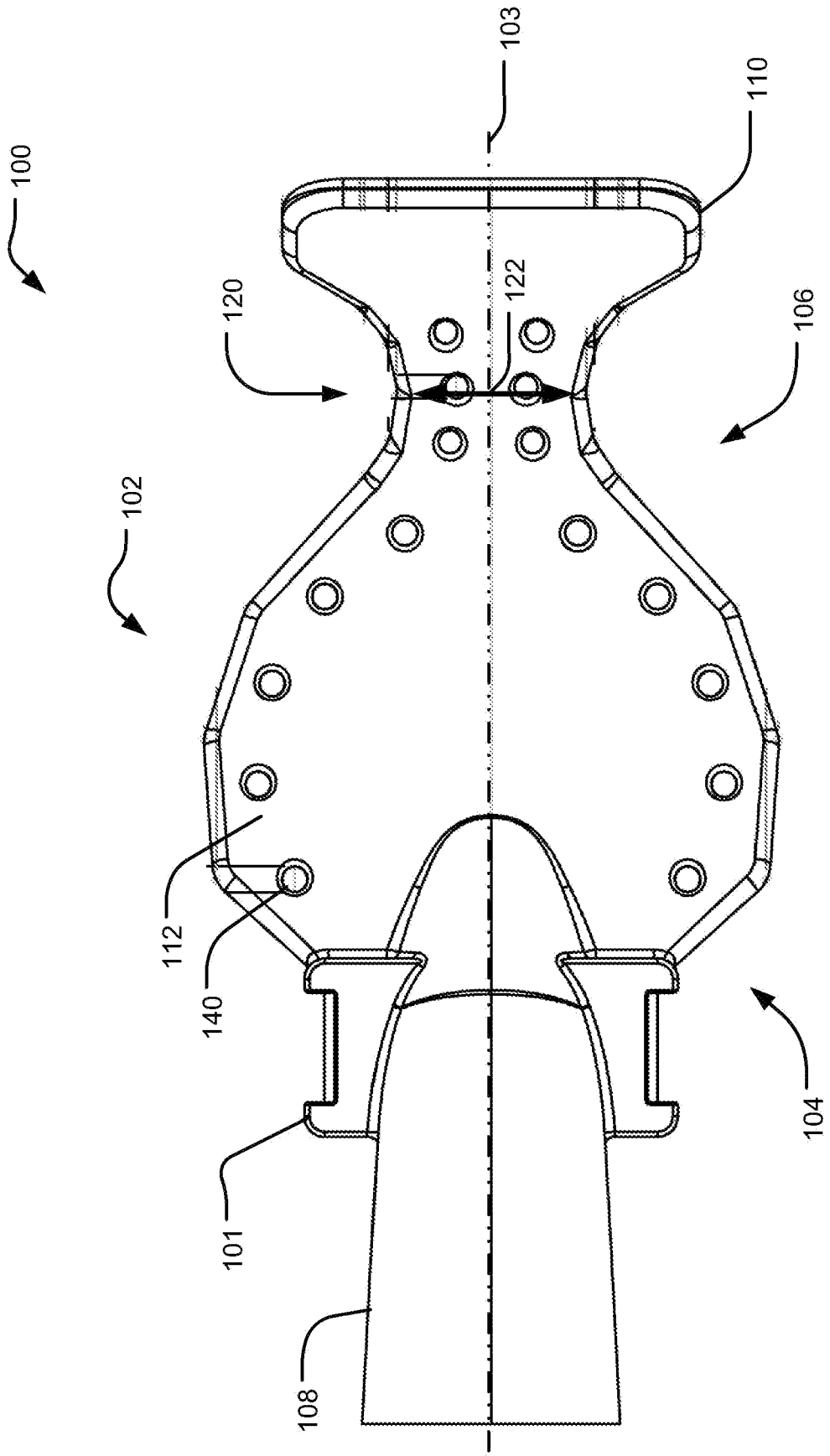

【圖1】

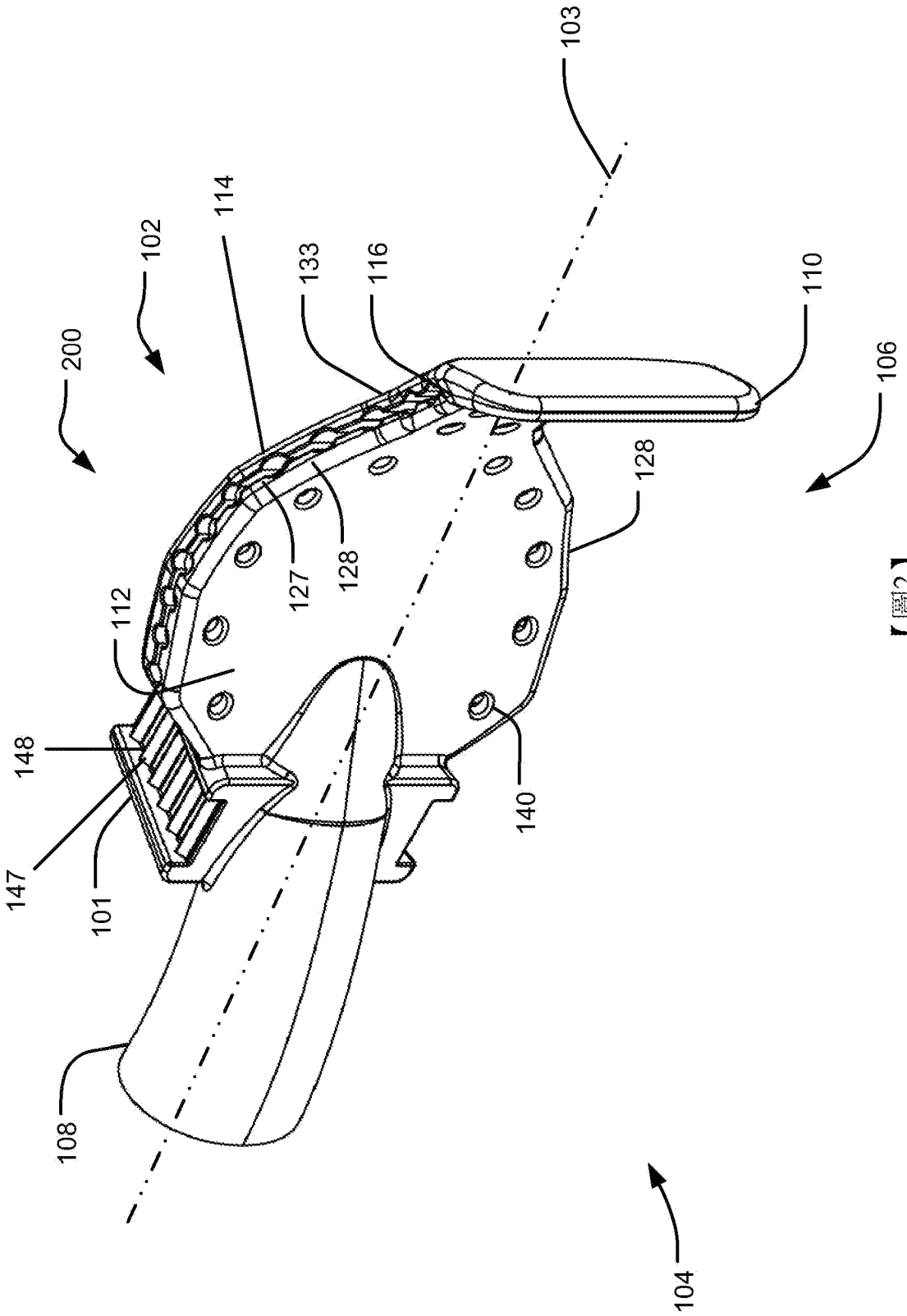
103
114
102
133
116
110
200
106
128
127
128
112
148
140
147
101
108
104

【圖2】

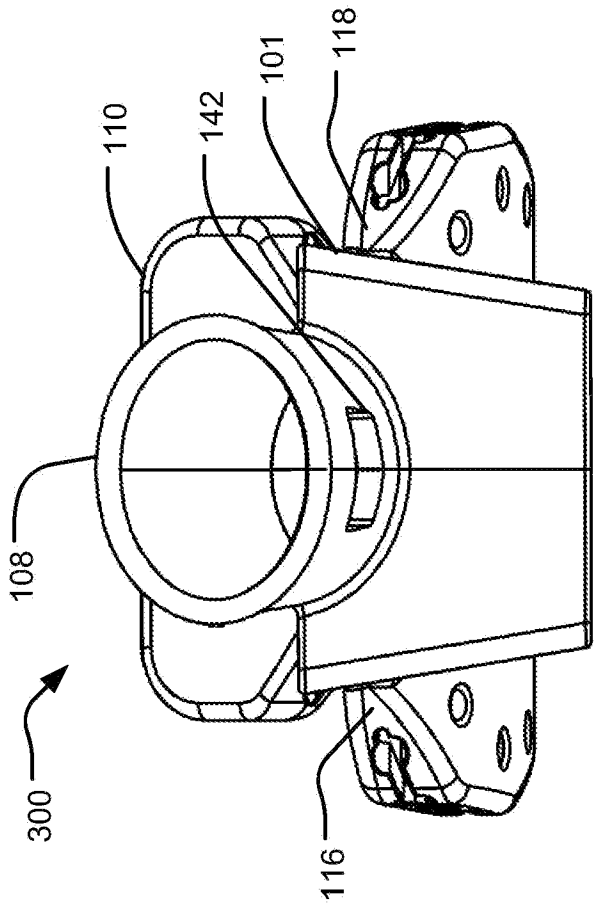

【圖3】

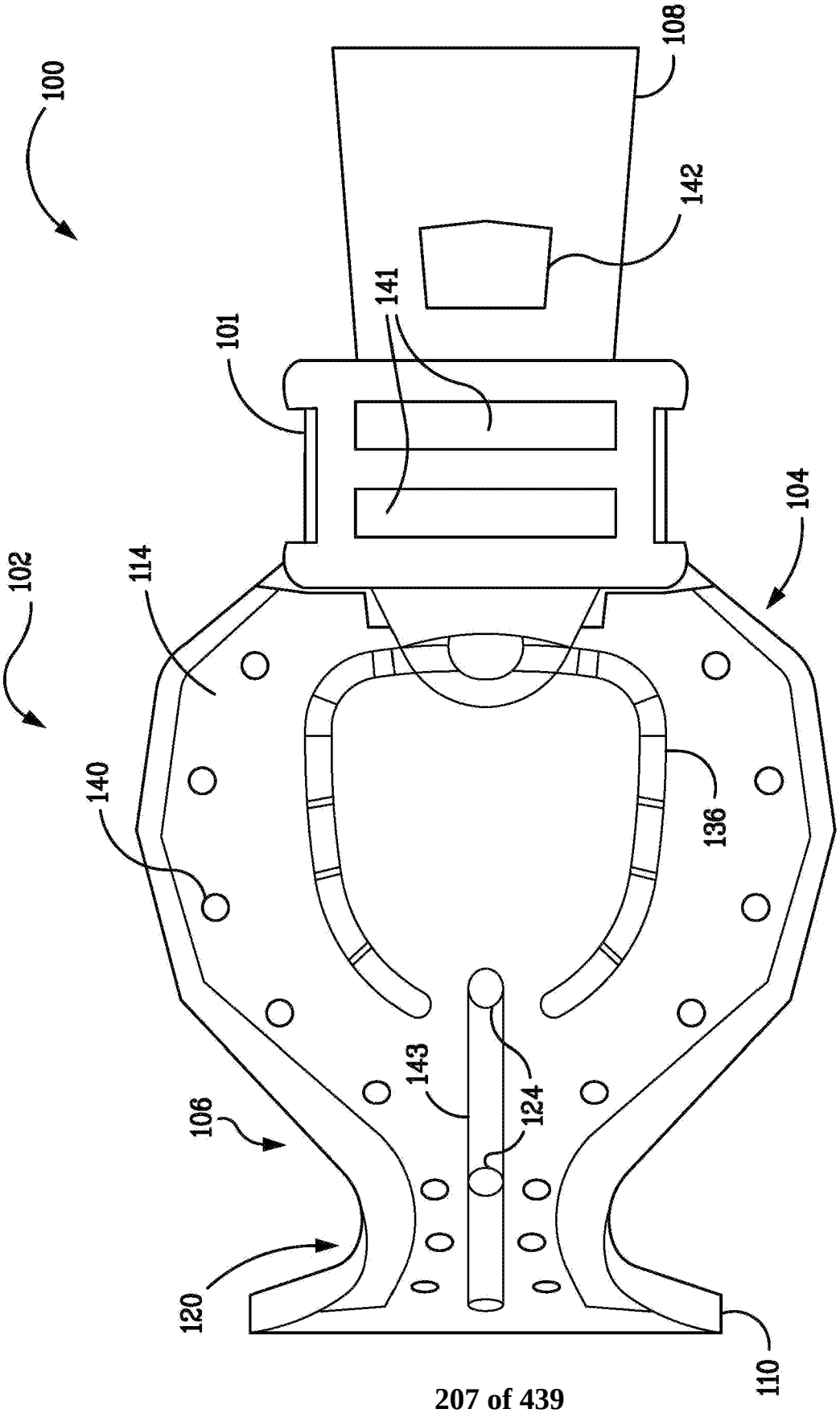

【圖4】

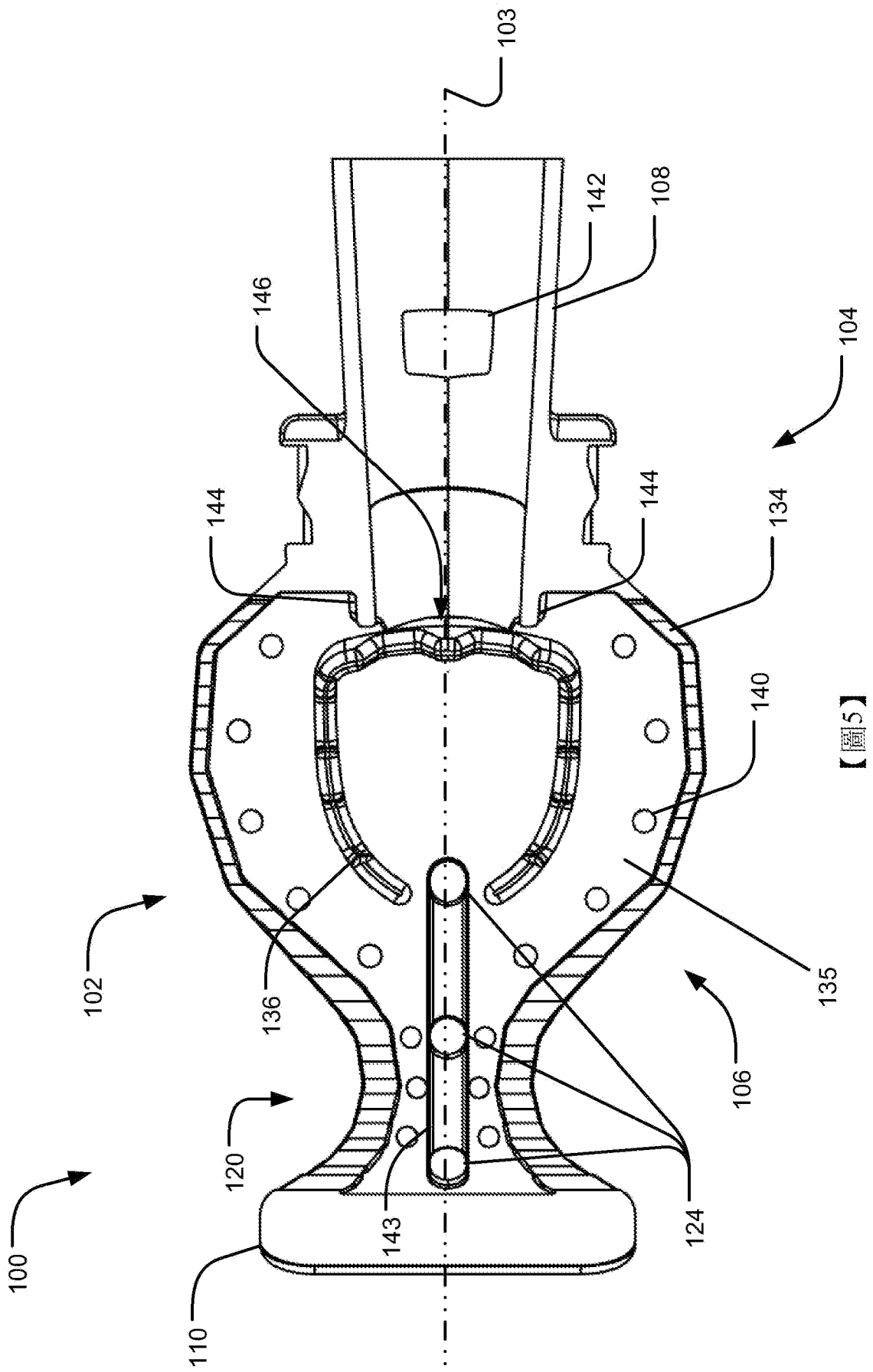
103
142
108
146
104
144
144
134
140
102
136
135
106
120
100
143
124
110

【圖5】

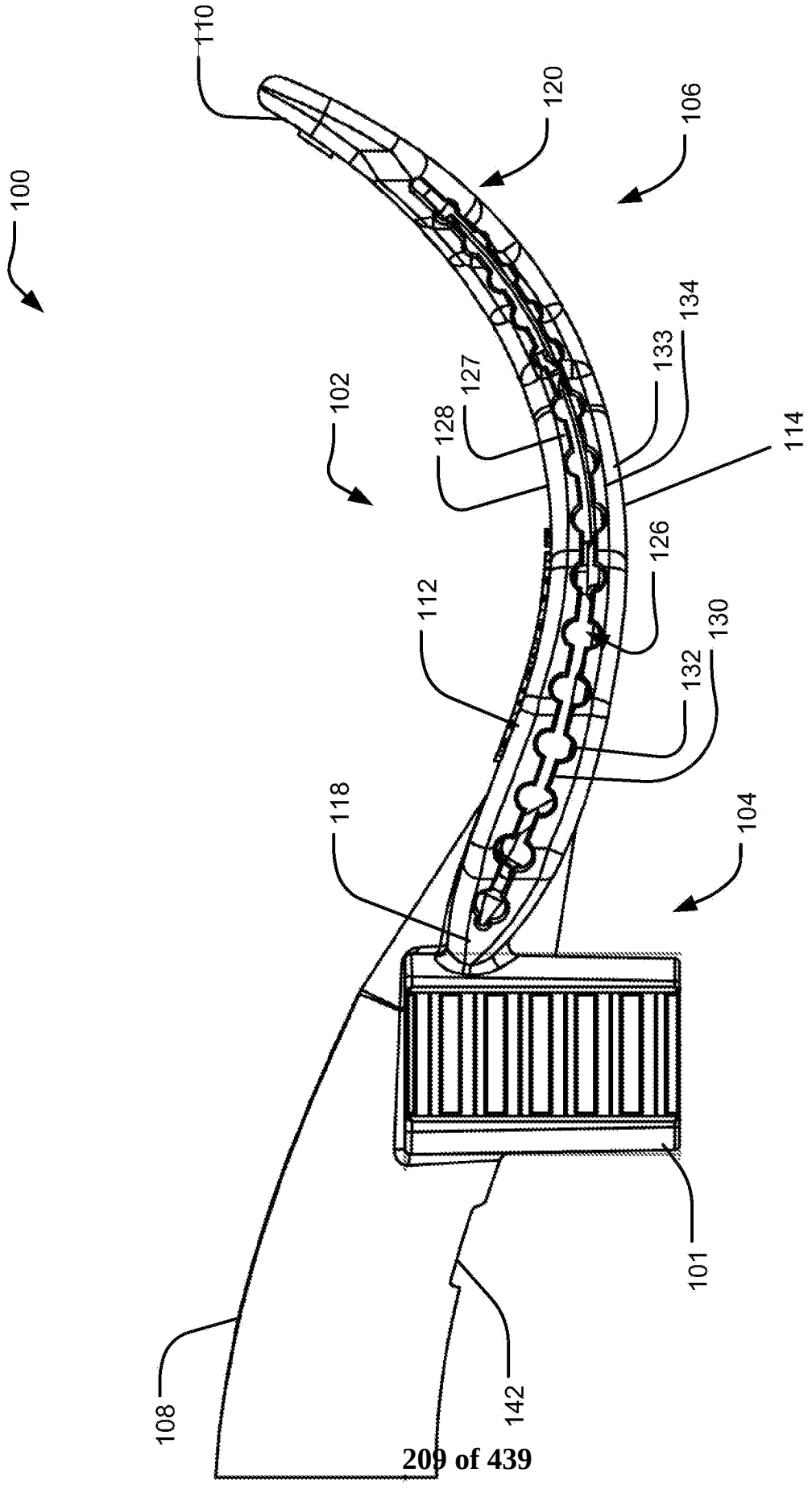
100
110
120
106
102
127
128
133
134
114
126
112
130
132
118
104
101
108
142

【圖6】

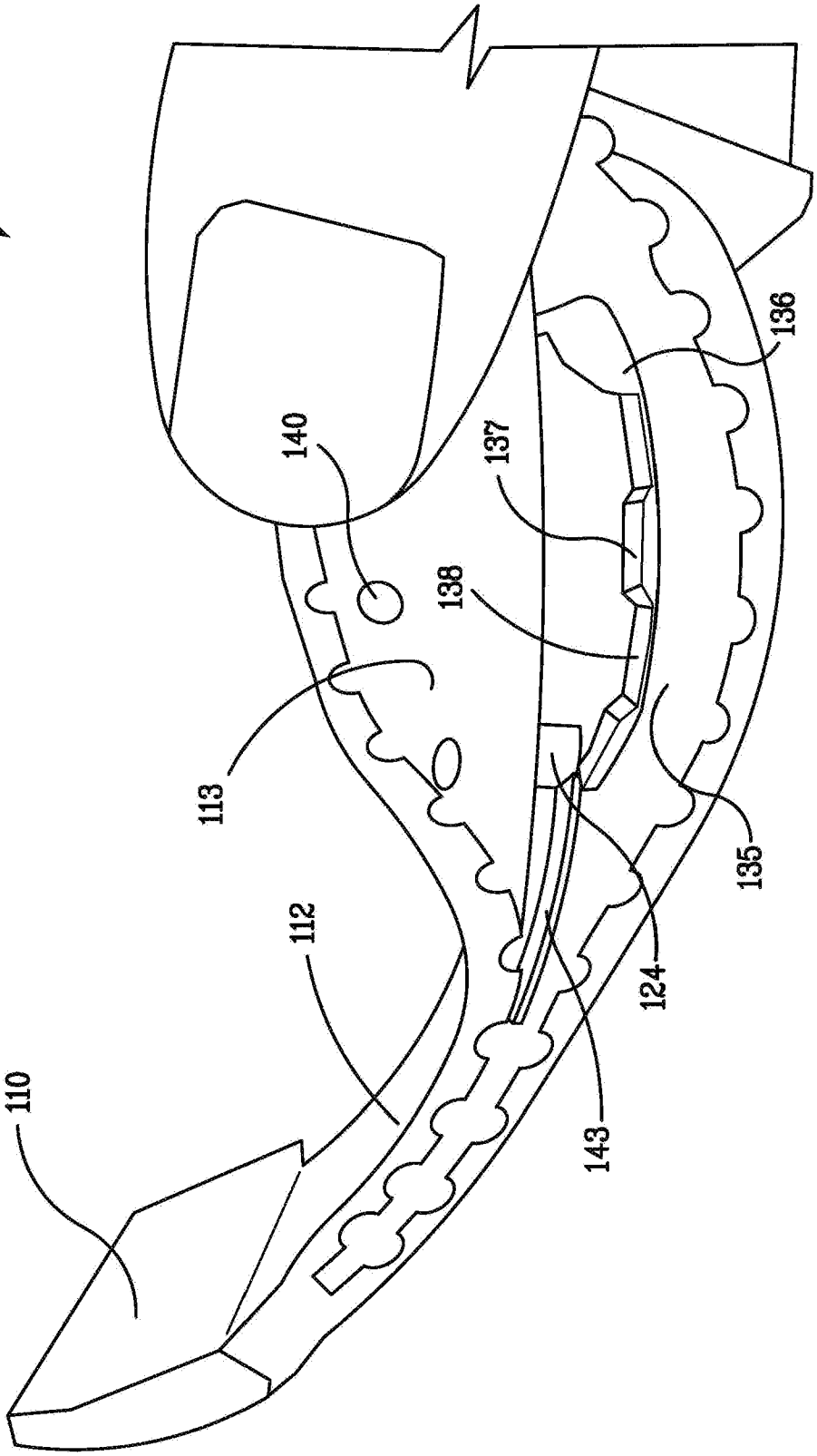

【圖7】

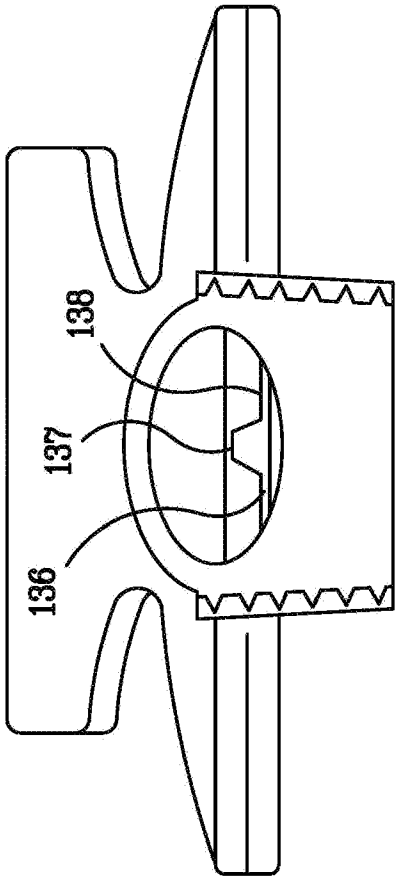

【圖8】

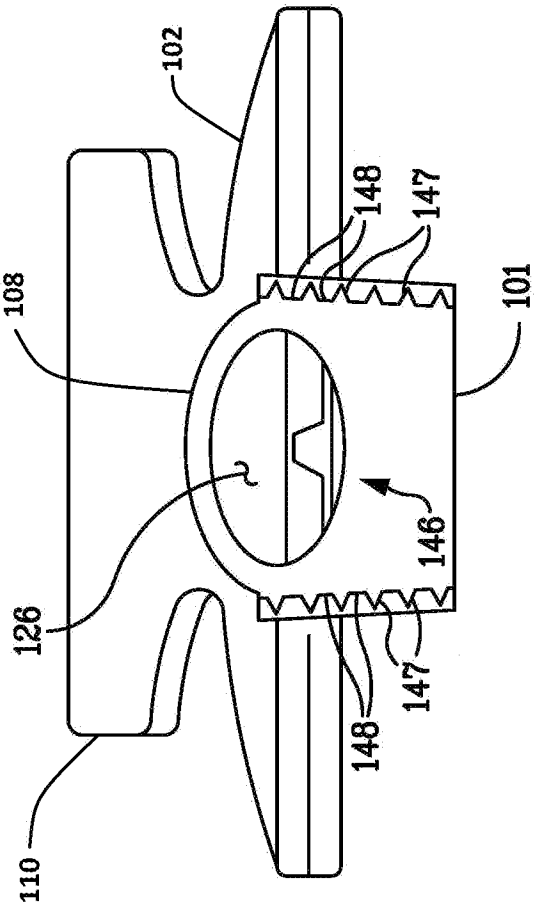

【圖9】

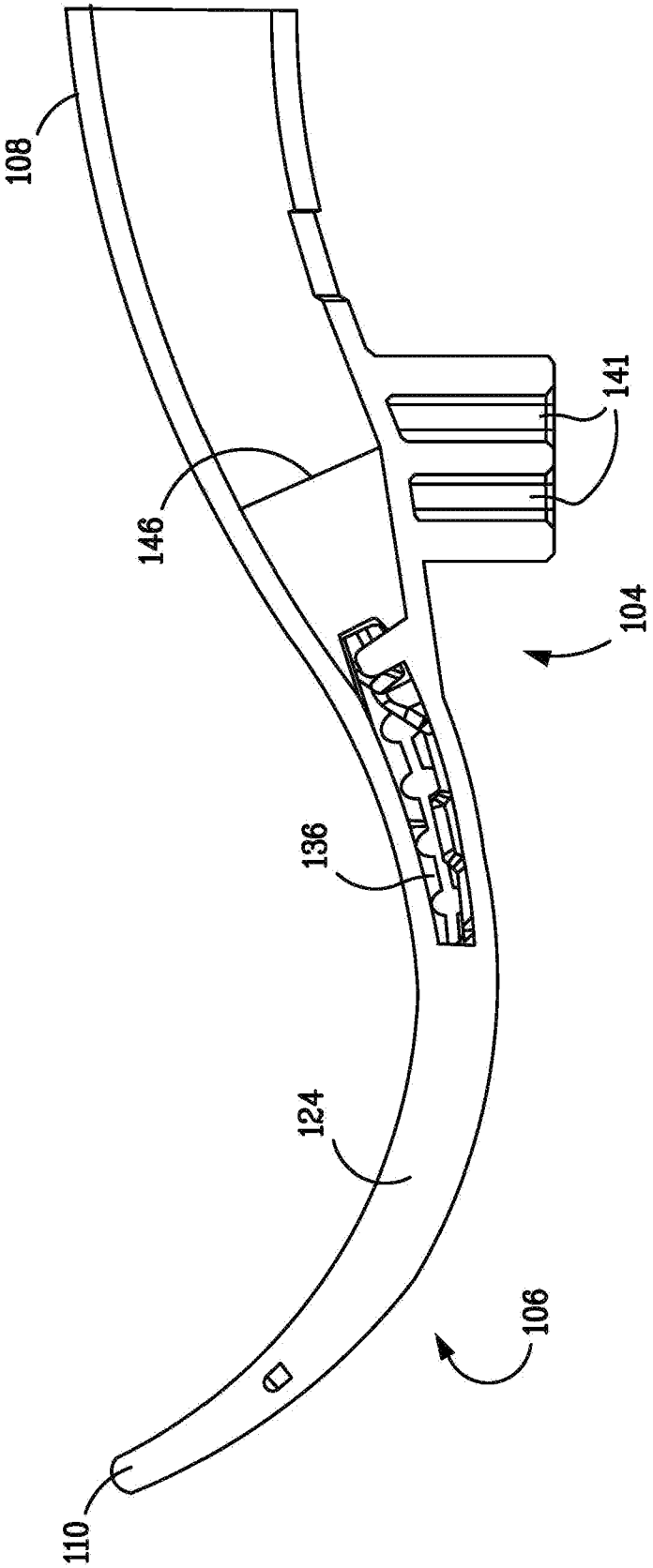

【圖10】

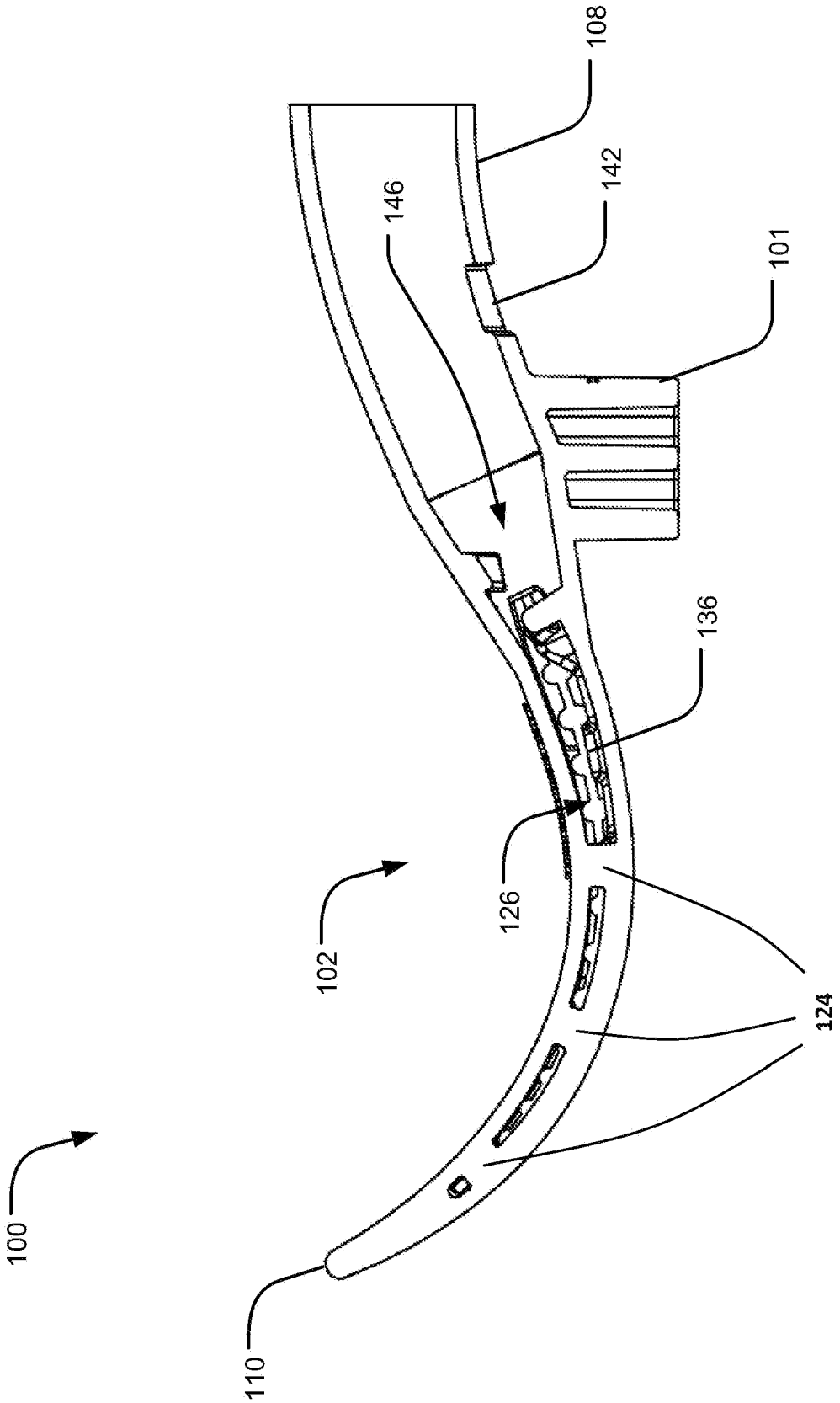

【圖11】

PATENT COOPERATION TREATY

PCT

INTERNATIONAL PRELIMINARY REPORT ON PATENTABILITY
(Chapter I of the Patent Cooperation Treaty)

(PCT Rule 44*bis*)

Applicant's or agent's file reference INCEP-005PCT	**FOR FURTHER ACTION**	See item 4 below
International application No. PCT/US2020/032228	International filing date *(day/month/year)* 08 May 2020 (08.05.2020)	Priority date *(day/month/year)* 10 May 2019 (10.05.2019)
International Patent Classification (8th edition unless older edition indicated) See relevant information in Form PCT/ISA/237		
Applicant DRYSHIELD, LLC		

1. This international preliminary report on patentability (Chapter I) is issued by the International Bureau on behalf of the International Searching Authority under Rule 44 *bis*.1(a).

2. This REPORT consists of a total of 7 sheets, including this cover sheet.

   In the attached sheets, any reference to the written opinion of the International Searching Authority should be read as a reference to the international preliminary report on patentability (Chapter I) instead.

3. This report contains indications relating to the following items:

☒	Box No. I	Basis of the report
☐	Box No. II	Priority
☐	Box No. III	Non-establishment of opinion with regard to novelty, inventive step and industrial applicability
☐	Box No. IV	Lack of unity of invention
☒	Box No. V	Reasoned statement under Article 35(2) with regard to novelty, inventive step or industrial applicability; citations and explanations supporting such statement
☐	Box No. VI	Certain documents cited
☐	Box No. VII	Certain defects in the international application
☒	Box No. VIII	Certain observations on the international application

4. The International Bureau will communicate this report to designated Offices in accordance with Rules 44*bis*.3(c) and 93*bis*.1 but not, except where the applicant makes an express request under Article 23(2), before the expiration of 30 months from the priority date (Rule 44*bis* .2).

	Date of issuance of this report 16 November 2021 (16.11.2021)
The International Bureau of WIPO 34, chemin des Colombettes 1211 Geneva 20, Switzerland	Authorized officer Nora Lindner e-mail pct.team5@wipo.int

Form PCT/IB/373 (revised January 2020)

PATENT COOPERATION TREATY

From the
INTERNATIONAL SEARCHING AUTHORITY

To: JACEK MAREK WNUK
POLSINELLI LLP
THREE EMBARCADERO CENTER, SUITE 2400
SAN FRANCISCO, CA 94111

PCT

WRITTEN OPINION OF THE INTERNATIONAL SEARCHING AUTHORITY

(PCT Rule 43*bis*.1)

Date of mailing *(day/month/year)*	12 AUG 2020
Applicant's or agent's file reference: INCEP-005PCT	**FOR FURTHER ACTION** See paragraph 2 below

International application No.	International filing date *(day/month/year)*	Priority date *(day/month/year)*
PCT/US 20/32228	08 May 2020 (08.05.2020)	10 May 2019 (10.05.2019)

International Patent Classification (IPC) or both national classification and IPC

IPC - A61B 1/24, A61C 17/00, A61C 17/06, A61C 17/10, A61C 5/14 (2020.01)

CPC - A61B 1/24, A61C 17/00, A61C 17/06, A61C 17/10, A61C 5/14, A61C 5/90

Applicant DRYSHIELD, LLC

1. This opinion contains indications relating to the following items:

- ☒ Box No. I Basis of the opinion
- ☐ Box No. II Priority
- ☐ Box No. III Non-establishment of opinion with regard to novelty, inventive step and industrial applicability
- ☐ Box No. IV Lack of unity of invention
- ☒ Box No. V Reasoned statement under Rule 43*bis*.1(a)(i) with regard to novelty, inventive step and industrial applicability; citations and explanations supporting such statement
- ☐ Box No. VI Certain documents cited
- ☐ Box No. VII Certain defects in the international application
- ☒ Box No. VIII Certain observations on the international application

2. **FURTHER ACTION**

If a demand for international preliminary examination is made, this opinion will be considered to be a written opinion of the International Preliminary Examining Authority ("IPEA") except that this does not apply where the applicant chooses an Authority other than this one to be the IPEA and the chosen IPEA has notified the International Bureau under Rule 66.1*bis*(b) that written opinions of this International Searching Authority will not be so considered.

If this opinion is, as provided above, considered to be a written opinion of the IPEA, the applicant is invited to submit to the IPEA a written reply together, where appropriate, with amendments, before the expiration of 3 months from the date of mailing of Form PCT/ISA/220 or before the expiration of 22 months from the priority date, whichever expires later.

For further options, see Form PCT/ISA/220.

Name and mailing address of the ISA/US	Date of completion of this opinion	Authorized officer
Mail Stop PCT, Attn: ISA/US Commissioner for Patents P.O. Box 1450, Alexandria, Virginia 22313-1450 Facsimile No. 571-273-8300	27 JULY 2020	Lee Young PCT Help Desk Telephone No. 571-272-4300

Form PCT/ISA/237 (cover sheet) (revised January 2019)

WRITTEN OPINION OF THE INTERNATIONAL SEARCHING AUTHORITY

International application No.
PCT/US 20/32228

Box No. I Basis of this opinion

1. With regard to the **language**, this opinion has been established on the basis of:

   ☒ the international application in the language in which it was filed.

   ☐ a translation of the international application into _____ which is the language of a translation furnished for the purposes of international search (Rules 12.3(a) and 23.1(b)).

2. ☐ This opinion has been established taking into account the **rectification of an obvious mistake** authorized by or notified to this Authority under Rule 91 (Rule 43*bis*.1(b)).

3. ☐ With regard to any **nucleotide and/or amino acid sequence** disclosed in the international application, this opinion has been established on the basis of a sequence listing:

   a. ☐ forming part of the international application as filed:

      ☐ in the form of an Annex C/ST.25 text file.

      ☐ on paper or in the form of an image file.

   b. ☐ furnished together with the international application under PCT Rule 13*ter*.1(a) for the purposes of international search only in the form of an Annex C/ST.25 text file.

   c. ☐ furnished subsequent to the international filing date for the purposes of international search only:

      ☐ in the form of an Annex C/ST.25 text file (Rule 13*ter*.1(a)).

      ☐ on paper or in the form of an image file (Rule 13*ter*.1(b) and Administrative Instructions, Section 713).

4. ☐ In addition, in the case that more than one version or copy of a sequence listing has been filed or furnished, the required statements that the information in the subsequent or additional copies is identical to that forming part of the application as filed or does not go beyond the application as filed, as appropriate, were furnished.

5. Additional comments:

Form PCT/ISA/237 (Box No. I) (revised January 2019)

WRITTEN OPINION OF THE INTERNATIONAL SEARCHING AUTHORITY

International application No.
PCT/US 20/32228

Box No. V **Reasoned statement under Rule 43*bis*.1(a)(i) with regard to novelty, inventive step and industrial applicability; citations and explanations supporting such statement**

1. Statement

Novelty (N)	Claims	1-20	YES
	Claims	none	NO
Inventive step (IS)	Claims	none	YES
	Claims	1-20	NO
Industrial applicability (IA)	Claims	1-20	YES
	Claims	none	NO

2. Citations and explanations:
Claims 1-20 lack an inventive step under PCT Article 33(3) as being obvious over US 2017/0156832 A1 to Reyes in view of US 2014/0212838 A1 to Incept, Inc. (hereinafter Incept).

Regarding claim 1, Reyes teaches a dental mouthpiece (see fig. 1-9; para [0022]) the dental mouthpiece comprising: a main body portion at a central part of the mouthpiece having a first end and a second end (fig. 3 see in closed configuration the dental mouthpiece comprises a main body portion which is centrally circular with ends at suction piece 28 and the opposite, tapered distal end; para [0022]; para [0031]), the main body portion having an anterior wall (fig. 3, 5 see anterior wall 32; para [0028]) and a posterior wall (fig. 3, 5 see posterior wall 34; para [0028]), the anterior wall and the posterior wall defining an interior space (fig. 3, 5 see walls 32, 34 define space therebetween when the mouthpiece is closed), at least one connector connecting the anterior wall to the posterior wall (fig. 1 see connector 36/38 on trough 18/20; para [0028]; para [0032]), at least one anterior intervening wall extending from the anterior wall partially towards the posterior wall (fig. 1-5 see anterior intervening wall 8; para [0024]-[0025]), and at least one posterior intervening wall extending from the posterior wall partially towards the anterior wall (fig. 1-5 see posterior intervening wall 10; para [0024]-[0025]), the at least one anterior intervening wall and the at least one posterior intervening wall each having alternating crests and troughs (fig. 1-5 see crests 12 and troughs between crests 12; para [0034]; para [0027]); a suction connector portion connected to the first end (fig. 1-7 see suction connector portion 26; para [0031]), the connector portion connecting the interior space to a vacuum suction source (para [0029]; para [0031]); and a cheek retractor portion connected to the second end (fig. 1-3 see tapered distal end; para [0036]), but does not explicitly teach the dental mouthpiece formed in a curve, the main body at a central part of the curve, the anterior wall inside the curve nor the posterior wall outside the curve. However, in similar art, Incept teaches a dental mouthpiece formed in a curve (see fig. 1A, 1D-E; para [0033]) comprising a main body portion at a central part of the curve (fig. 1E see main body portion at the center of the curve between the left open channel and the right distal tip), the main body portion having an anterior wall inside the curve (fig. 1A-1D see anterior wall inside curve) and a posterior wall outside the curve (fig. 1A-1D see posterior wall outside the curve). Curved shaped of dental mouthpieces are well known in the art for improved fit within the mouth for retracting a cheek. Accordingly, it would have been obvious to a person having ordinary skill in in the art to have shaped the mouthpiece taught by Reyes in a curve as taught by Incept, such that the main body is at a central part of the curve, the anterior wall is inside the curve, and the posterior wall in outside the curve, in order to optimize the shape of the mouthpiece to improve fit in mouth of a patient.

Regarding claim 2, Reyes in view of Incept teach the mouthpiece of claim 1, and Reyes modified by Incept further teaches wherein the at least one connector is a cylindrical shaped pillar (Reyes fig. 1 see connector includes cylindrical shaped pillar 36; para [0032]).

Regarding claim 3, Reyes in view of Incept teach the mouthpiece of claim 1, and Reyes modified by Incept further teaches wherein the at least one connector is a wall spanning longitudinally in the main body portion in the interior space (Reyes fig. 1 see connector includes wall 18/20; para [0028]).

Regarding claim 4, Reyes in view of Incept teach the mouthpiece of claim 1, but Reyes modified by Incept does not explicitly teach the mouthpiece further comprising a bridge structure in the interior space protruding from the posterior wall, wherein the bridge comprises protrusions, wherein the protrusions are battlement-shaped, with spaced crests. However, Incept teaches a mouthpiece comprising a bridge structure in an interior space (fig. 1E see bridge 180; para [0042]), wherein the bridge comprises protrusions (fig. 1E see protruding crests of bridge 180), wherein the protrusions are battlement-shaped, with spaced crests (fig. 1E see spaced crests form a battlement-shape; para [0042]). It would have been obvious to a person having ordinary skill in the art to have included a bridge structure as taught by Incept in the mouthpiece taught by Reyes in order to improve the transfer of fluids to the vacuum connection (see Incept para [0042]), thus improving the suction capabilities of the mouthpiece.

Regarding claim 5, Reyes in view of Incept teach the mouthpiece of claim 4, but Reyes modified by Incept does not explicitly teach wherein the protrusions near the suction connector is in greater height and length. However, Incpet teaches wherein the protrusions near the suction connector are greater in size (see fig. 1E; para [0042]). Furthermore, Incpet teaches the protrusions are shaped to improve the suction of fluids through the interior space (para [0042]). Accordingly, it would have been obvious to a person having ordinary skill in the art to have increased both the height and length of the protrusions near the suction connector in order to improve the suction of fluids through the interior space and thus improve the suction capabilities of the device.

-*-Continued in Supplemental Box-*-

WRITTEN OPINION OF THE
INTERNATIONAL SEARCHING AUTHORITY

International application No.
PCT/US 20/32228

Box No. VIII Certain observations on the international application

The following observations on the clarity of the claims, description, and drawings or on the question whether the claims are fully supported by the description, are made:

Claim 4: Regarding claim 4, the claim language is confusing and lacks clarity. Specifically, the recitation "protrusions" lacks proper antecedent basis. In order to give meaning to this claim such that an opinion may be rendered, it has been interpreted to read "The mouthpiece of claim 1, further comprising a bridge structure in the interior space protruding from the posterior wall, wherein the bridge comprises protrusions, wherein the protrusions are battlement-shaped, with spaced crests," which gives proper antecedent basis.

WRITTEN OPINION OF THE INTERNATIONAL SEARCHING AUTHORITY

International application No.
PCT/US 20/32228

Supplemental Box

In case **the space in any of the preceding boxes is not sufficient.**
Continuation of:
-*-Box V.2 - Citations and Explanations-*-

Regarding claim 6, Reyes in view of Incept teach the mouthpiece of claim 4, and Reyes modified by Incept further teaches wherein spaces between the crests are troughs of the battlement shape (see Incept fig. 1A spaces between crests are battlement-shaped troughs; para [0042]).

Regarding claim 7, Reyes in view of Incept teach the mouthpiece of claim 1, but Reyes modified by Incept does not explicitly teach wherein the alternating crests and troughs on the anterior intervening wall and the posterior intervening wall are semi-circle shaped. However, optimization of shape is within the ordinary skill of a person with the art. Furthermore, Reyes teaches the crests and troughs comprise sharp corners (see fig. 1-3; para [0034]; para [0025]-[0027]), but it is well known it the art that sharp corners are difficult and expensive to manufacture. Accordingly, it would have been obvious to a person having ordinary skill in the art to have optimized the shape of the crests and troughs to a semi-circle in order to prevent the presence of sharp corners to improve ease of manufacturing.

Regarding claim 8, Reyes in view of Incept teach the mouthpiece of claim 1, and Reyes modified by Incept further teaches wherein the anterior intervening wall and the posterior intervening wall have varying heights to maintain integrity of the main body portion (Reyes fig. 1-3 see presence of crests 12 and troughs therebetween varies the heights of intervening walls 8, 10 in order to provide integrity to the structure of the interior space; para [0034]).

Regarding claim 9, Reyes in view of Incept teach the mouthpiece of claim 1, and Reyes modified by Incept further teaches wherein the troughs of the anterior intervening wall and the posterior intervening wall decrease in size as the troughs approach the cheek retractor portion (Reyes fig. 1 see troughs between crests 12 become smaller in length as they approach the cheek retractor portion at the distal end).

Regarding claim 10, Reyes in view of Incept teach the mouthpiece of claim 1, and Reyes modified by Incept further teaches wherein the anterior intervening wall and the posterior intervening wall meet at a point where the suction connector meets the main body (Reyes fig. 1-3; para [0034]).

Regarding claim 11, Reyes in view of Incept teach the mouthpiece of claim 1, and Reyes modified by Incept further teaches wherein the anterior intervening wall and the posterior intervening wall meet at a point where the main body meets the cheek retractor portion (Reyes fig. 1-3; para [0034]).

Regarding claim 12, Reyes in view of Incept teach the mouthpiece of claim 1, but Reyes modified by Incept does not explicitly teach further comprising a bite block integrated to the suction connector portion, wherein the bite block provide additional crush-resistance and decreased compressibility during biting by a patient. However, Incept teaches the mouthpiece may provide a bite block (see claim 18-19). Bite blocks are well known in the art to prevent compression of a device entering the mouth cavity and to ensure that the mouth or airway remains open during a procedure. Accordingly, it would have been obvious to a person having ordinary skill in the art to have provided a bite block in the mouthpiece to protect the suction tube and maintain the mouth in an open position during a procedure.

Regarding claim 13, Reyes in view of Incept teach the mouthpiece of claim 1, but Reyes modified by Incept does not explicitly teach wherein the main body portion, the suction connector portion, and the cheek retractor portion are formed by injection-molding as one piece. However, Reyes teaches the device may be manufactured by any simplified process (para [0010]). Furthermore, Incept teaches the mouthpiece may be formed by injection-molding (para [0032]). Injection molding is well known in the art for easy and inexpensive manufacturing of a one-piece polymer. Accordingly, it would have been obvious to a person having ordinary skill in the art to have manufactured the mouthpiece by injection-molding in order to provide a cost-effective production of the device.

Regarding claim 14, Reyes in view of Incept teach the mouthpiece of claim 1, but Reyes modified by Incept does not explicitly teach wherein a material that forms the main body, the suction connector portion, and the cheek retractor portion is a flexible, translucent, high heat-resistant, autoclavable silicon-based material. However, Reyes teaches wherein the material of the mouthpiece is a suitable, flexible polymer (para [0023]). Furthermore, Incept teaches a mouthpiece formed of a flexible, translucent, high heat-resistant, autoclavable silicon -based material (para [0032]). It would have been obvious to a person having ordinary skill in the art to have provided a a flexible, translucent, high heat-resistant, autoclavable silicon-based material to construct the mouthpiece in order to optimize the mouthpiece for strength and manufacturing properties.

Regarding claim 15, Reyes in view of Incept teach the mouthpiece of claim 1, and Reyes modified by Incept further teaches wherein the posterior wall further includes a stability bar protruding from an interior surface of the posterior wall and along a longitudinal axis of the main body (Reyes fig. 1-5 see stability bar 18/20 comprises connector 36/38; para [0028]; para [0032]).

Regarding claim 16, Reyes in view of Incept teach the mouthpiece of claim 15, and Reyes modified by Incept further teaches wherein the at least one connector lies evenly spaced along the stability bar (Reyes fig. 1-5 see stability bar 18/20 comprises connector 36/38; para [0028]; para [0032]).

Regarding claim 17, Reyes in view of Incept teach the mouthpiece of claim 1, but Reyes modified by Incept does not explicitly teach wherein the suction connector portion comprises a cutout corresponding to a protrusion on a vacuum adapter interlocking fit. However, Incept teaches wherein the dental mouthpiece comprises a suction connector (Incept fig. 2A-E see connector 120; para [0045]) which connects to a vacuum source with an interlocking fit by a cutout (Incept see fig. 2A-E cutout 230; para [0045]). It would have been obvious to a person having ordinary skill in the art to have included a interlocking fit to a vacuum source as taught by Incept in the connector portion taught by Reyes in order to improve the integrity of the connector and prevent failure during use.

-*-Continued in next Supplemental Box-*-

WRITTEN OPINION OF THE
INTERNATIONAL SEARCHING AUTHORITY

International application No.
PCT/US 20/32228

Supplemental Box

In case **the space in any of the preceding boxes is not sufficient.**
Continuation of:
-*-Supplemental Box - Box V.2 - Citations and Explanations-*-

Regarding claim 18, Reyes in view of Incept teach the mouthpiece of claim 1, and Reyes modified by Incept further teaches where in the suction connector portion connects to a vacuum source (Reyes para [0030]-[0031]; para [0036]-[0038]), wherein activation of the vacuum source provides suction of fluids from the interior space of the main body (Reyes para [0036]-[0038]).

Regarding claim 19, Reyes in view of Incept teach the mouthpiece of claim 18, and Reyes modified by Incept further teaches wherein the activation of the vacuum source draws fluids from an exterior of the main body through the crests and troughs of the anterior intervening wall and the posterior intervening wall, into the interior space of the main body (Reyes para [0036]-[0038]).

Regarding claim 20, Reyes in view of Incept teach the mouthpiece of claim 1, and Reyes modified by Incept further teaches wherein the cheek retractor portion includes a surface that applies pressure based on resilience of the cheek retractor portion (Reyes fig. 1-5 see outer surface of cheek retractor portion at distal end; para [0036]; para [0023] device is flexible).

Claims 1-20 have industrial applicability as defined by PCT Article 33(4) because the subject matter can be made or used by industry.

Electronic Acknowledgement Receipt

EFS ID:	45738961
Application Number:	14228057
International Application Number:	
Confirmation Number:	1983
Title of Invention:	INTRAORAL DEVICE WITH SLIT
First Named Inventor/Applicant Name:	Thien Nguyen
Customer Number:	138718
Filer:	TamThanh Thi Pham/Lea Fong
Filer Authorized By:	TamThanh Thi Pham
Attorney Docket Number:	INCEP-001COD
Receipt Date:	24-MAY-2022
Filing Date:	27-MAR-2014
Time Stamp:	12:26:33
Application Type:	Utility under 35 USC 111(a)

Payment information:

Submitted with Payment	no

File Listing:

Document Number	Document Description	File Name	File Size(Bytes)/ Message Digest	Multi Part /.zip	Pages (if appl.)
1	Transmittal Letter	INCEP-001COD_IDS_Statement_5-20-22.pdf	96011 74ef18e7777713297497fd8e09a5a73b45c2f653	no	2

Warnings:

Information:					
2	Information Disclosure Statement (IDS) Form (SB08)	INCEP-001COD_IDS_1449_5-20-22.pdf	223751 a1906718e9581a9fc95a5b064de4023577e4761b	no	2
Warnings:					
Information:					
This is not an USPTO supplied IDS fillable form					
3	Foreign Reference	CA_3139689.pdf	1273768 21dfe6b855712d8541bfca291de73ced66f8bcde	no	30
Warnings:					
Information:					
4	Foreign Reference	CN_104490483.pdf	306679 aee54f91e9c83f3868077da269a68c0d828398c0	no	6
Warnings:					
Information:					
5	Foreign Reference	EP_3965637.pdf	279485 b6facaed01b2b5b281800cdb7c2f1522b3f481fa	no	1
Warnings:					
Information:					
6	Foreign Reference	TW_202108088.pdf	5674108 13bd9b2eca6486b7b9441df641f913a246edc7a0	no	31
Warnings:					
Information:					
7	Non Patent Literature	PCTUS2020032228_InternationalPreliminaryReportOnPatentability_11-16-21.pdf	351747 4388434d3d0945d8683b19e6cf8b7bc55ed1101a	no	7
Warnings:					
Information:					
		Total Files Size (in bytes):	8205549		

This Acknowledgement Receipt evidences receipt on the noted date by the USPTO of the indicated documents, characterized by the applicant, and including page counts, where applicable. It serves as evidence of receipt similar to a Post Card, as described in MPEP 503.

New Applications Under 35 U.S.C. 111

If a new application is being filed and the application includes the necessary components for a filing date (see 37 CFR 1.53(b)-(d) and MPEP 506), a Filing Receipt (37 CFR 1.54) will be issued in due course and the date shown on this Acknowledgement Receipt will establish the filing date of the application.

National Stage of an International Application under 35 U.S.C. 371

If a timely submission to enter the national stage of an international application is compliant with the conditions of 35 U.S.C. 371 and other applicable requirements a Form PCT/DO/EO/903 indicating acceptance of the application as a national stage submission under 35 U.S.C. 371 will be issued in addition to the Filing Receipt, in due course.

New International Application Filed with the USPTO as a Receiving Office

If a new international application is being filed and the international application includes the necessary components for an international filing date (see PCT Article 11 and MPEP 1810), a Notification of the International Application Number and of the International Filing Date (Form PCT/RO/105) will be issued in due course, subject to prescriptions concerning national security, and the date shown on this Acknowledgement Receipt will establish the international filing date of the application.

IN THE UNITED STATES PATENT AND TRADEMARK OFFICE

Group Art Unit: 3772	Examiner: Hao D. Mai
Serial No.: 14/228, 057	Filed: March 27, 2014
In re Application of: Thien Nguyen	
Confirmation No.: 1983	Customer No.: 138718
Title: INTRAORAL DEVICE WITH SLIT	

SUPPLEMENTAL INFORMATION DISCLOSURE STATEMENT
Under 37 C.F.R. § 1.56 and 1.97-1.98

Examiner:

Pursuant to the provisions of 37 C.F.R. §§ 1.56 and 1.97-98 of the Rules of Practice in Patent Cases, enclosed herewith is form PTO-SB-08, listing several references. The Examiner is requested to make these references of official record in the application.

The references cited may be material to examination of the application and are submitted in compliance with the Applicant's duty of disclosure as defined by 37 C.F.R. § 1.56.

No representation is made or intended as to the completeness of this list, nor is the inclusion of any reference an admission that it is prior art or pertinent to this application.

Respectfully submitted,
POLSINELLI LLP

Dated: May 20, 2022

By: _____/Tam Thanh Pham/_____
Tam Thanh Pham (Reg. No. 50,565)
Polsinelli LLP
Three Embarcadero Center, Suite 2400
San Francisco, CA 94111
415-248-2100 (Main)
patentdocketing@polsinelli.com

UNITED STATES DEPARTMENT OF COMMERCE
United States Patent and Trademark Office
Address: COMMISSIONER FOR PATENTS
P.O. Box 1450
Alexandria, Virginia 22313-1450
www.uspto.gov

APPLICATION NO.	FILING DATE	FIRST NAMED INVENTOR	ATTORNEY DOCKET NO.	CONFIRMATION NO.
14/228,057	03/27/2014	Thien Nguyen	INCEP-001COD	1983

138718 7590 09/02/2022

Polsinelli LLP
PO Box 140310
Kansas City, MO 64114-0310

EXAMINER	
APONTE, MIRAYDA ARLENE	

ART UNIT	PAPER NUMBER
3772	

NOTIFICATION DATE	DELIVERY MODE
09/02/2022	ELECTRONIC

Please find below and/or attached an Office communication concerning this application or proceeding.

The time period for reply, if any, is set in the attached communication.

Notice of the Office communication was sent electronically on above-indicated "Notification Date" to the following e-mail address(es):

sfpatent@polsinelli.com
uspt@polsinelli.com

Office Action Summary	Application No. 14/228,057	Applicant(s) Nguyen et al.	
	Examiner MIRAYDA A APONTE	Art Unit 3772	AIA (FITF) Status No

-- The MAILING DATE of this communication appears on the cover sheet with the correspondence address --

Period for Reply

A SHORTENED STATUTORY PERIOD FOR REPLY IS SET TO EXPIRE 3 MONTHS FROM THE MAILING DATE OF THIS COMMUNICATION.

- Extensions of time may be available under the provisions of 37 CFR 1.136(a). In no event, however, may a reply be timely filed after SIX (6) MONTHS from the mailing date of this communication.
- If NO period for reply is specified above, the maximum statutory period will apply and will expire SIX (6) MONTHS from the mailing date of this communication.
- Failure to reply within the set or extended period for reply will, by statute, cause the application to become ABANDONED (35 U.S.C. § 133). Any reply received by the Office later than three months after the mailing date of this communication, even if timely filed, may reduce any earned patent term adjustment. See 37 CFR 1.704(b).

Status

1)☑ Responsive to communication(s) filed on 14 March 2022.

☐ A declaration(s)/affidavit(s) under **37 CFR 1.130(b)** was/were filed on _____.

2a)☐ This action is **FINAL.** 2b) ☑ This action is non-final.

3)☐ An election was made by the applicant in response to a restriction requirement set forth during the interview on _____; the restriction requirement and election have been incorporated into this action.

4)☐ Since this application is in condition for allowance except for formal matters, prosecution as to the merits is closed in accordance with the practice under *Ex parte Quayle*, 1935 C.D. 11, 453 O.G. 213.

Disposition of Claims*

5) ☑ Claim(s) 1-2,4-8,10,14-16 and 21-30 is/are pending in the application.

5a) Of the above claim(s) _____ is/are withdrawn from consideration.

6) ☐ Claim(s) _____ is/are allowed.

7) ☑ Claim(s) 1-2,4-8,10,14-16 and 21-30 is/are rejected.

8) ☐ Claim(s) _____ is/are objected to.

9) ☐ Claim(s) _____ are subject to restriction and/or election requirement

* If any claims have been determined allowable, you may be eligible to benefit from the **Patent Prosecution Highway** program at a participating intellectual property office for the corresponding application. For more information, please see http://www.uspto.gov/patents/init_events/pph/index.jsp or send an inquiry to **PPHfeedback@uspto.gov.**

Application Papers

10)☐ The specification is objected to by the Examiner.

11)☑ The drawing(s) filed on 27 March 2014 is/are: a)☐ accepted or b)☑ objected to by the Examiner.

Applicant may not request that any objection to the drawing(s) be held in abeyance. See 37 CFR 1.85(a).

Replacement drawing sheet(s) including the correction is required if the drawing(s) is objected to. See 37 CFR 1.121(d).

Priority under 35 U.S.C. § 119

12)☐ Acknowledgment is made of a claim for foreign priority under 35 U.S.C. § 119(a)-(d) or (f).

Certified copies:

a)☐ All b)☐ Some** c)☐ None of the:

1.☐ Certified copies of the priority documents have been received.

2.☐ Certified copies of the priority documents have been received in Application No. _____.

3.☐ Copies of the certified copies of the priority documents have been received in this National Stage application from the International Bureau (PCT Rule 17.2(a)).

** See the attached detailed Office action for a list of the certified copies not received.

Attachment(s)

1) ☐ Notice of References Cited (PTO-892)

2) ☑ Information Disclosure Statement(s) (PTO/SB/08a and/or PTO/SB/08b) Paper No(s)/Mail Date _____.

3) ☐ Interview Summary (PTO-413) Paper No(s)/Mail Date _____.

4) ☐ Other: _____.

DETAILED ACTION

Notice of Pre-AIA or AIA Status

1. The present application is being examined under the pre-AIA first to invent provisions.

Continued Examination under 37 CFR 1.114

2. A request for continued examination under 37 CFR 1.114, including the fee set forth in 37 CFR 1.17(e), was filed in this application after final rejection. Since this application is eligible for continued examination under 37 CFR 1.114, and the fee set forth in 37 CFR 1.17(e) has been timely paid, the finality of the previous Office action has been withdrawn pursuant to 37 CFR 1.114. Applicant's submission filed on 14 March 2022 has been entered.

Drawings

3. The drawings are objected to as failing to comply with 37 CFR 1.84(p)(5) because they include the following reference character not mentioned in the description: the reference number **320** of Fig. 3A is not found in the specification.

Corrected drawing sheets in compliance with 37 CFR 1.121(d), or amendment to the specification to add the reference character(s) in the description in compliance with 37 CFR 1.121(b) are required in reply to the Office action to avoid abandonment of the application. Any amended replacement drawing sheet should include all of the figures appearing on the immediate prior version of the sheet, even if only one figure is being amended. Each drawing sheet submitted after the filing date of an application must be labeled in the top margin as either "Replacement Sheet" or "New Sheet" pursuant to 37 CFR 1.121(d). If the changes are not accepted by the examiner, the applicant will be notified and informed of any required corrective action in the next Office action. The objection to the drawings will not be held in abeyance.

Claim Rejections - 35 USC § 112

4. The following is a quotation of the first paragraph of 35 U.S.C. 112(a):

> (a) IN GENERAL.—The specification shall contain a written description of the invention, and of the manner and process of making and using it, in such full, clear, concise, and exact terms as to enable any person skilled in the art to which it pertains, or with which it is most nearly connected, to make and use the same, and shall set forth the best mode contemplated by the inventor or joint inventor of carrying out the invention.

The following is a quotation of the first paragraph of pre-AIA 35 U.S.C. 112:

> The specification shall contain a written description of the invention, and of the manner and process of making and using it, in such full, clear, concise, and exact terms as to enable any person skilled in the art to which it pertains, or with which it is most nearly connected, to make and use the same, and shall set forth the best mode contemplated by the inventor of carrying out his invention.

5. **Claims 1, 2, 4-8, 10, 14-16 and 21-30** are rejected under 35 U.S.C. 112(a) or 35 U.S.C. 112 (pre-AIA), first paragraph, as failing to comply with the written description requirement. The claim(s) contains subject matter which was not described in the specification in such a way as to reasonably convey to one skilled in the relevant art that the inventor or a joint inventor, or for applications subject to pre-AIA 35 U.S.C. 112, the inventor(s), at the time the application was filed, had possession of the claimed invention.

6. **Regarding claims 1 and 21,** the claims describe that the first wall and the second wall are defined by one or more edges. However, the specification only describes that each of the first wall and the second wall includes superior and inferior edges (see [0035]). Therefore, the present application does not disclose the option of having **one edge** on each of the first wall and the second wall.

Response to Arguments

7. Applicant's arguments with respect to **claims 1, 2, 4-8, 10, 14-16 and 21-30** have been considered but are moot because the new ground of rejection does not rely on any reference applied in the prior rejection of record for any teaching or matter specifically challenged in the argument.

Conclusion

8. Any inquiry concerning this communication or earlier communications from the examiner should be directed to MIRAYDA ARLENE APONTE whose telephone number is (571)270-1933. The examiner can normally be reached M-F 8-5.

9. Examiner interviews are available via telephone, in-person, and video conferencing using a USPTO supplied web-based collaboration tool. To schedule an interview, applicant is encouraged to use the USPTO Automated Interview Request (AIR) at http://www.uspto.gov/interviewpractice.

10. If attempts to reach the examiner by telephone are unsuccessful, the examiner's supervisor, Cris Rodriguez can be reached on 571-272-4964. The fax phone number for the organization where this application or proceeding is assigned is 571-273-8300.

11. Information regarding the status of published or unpublished applications may be obtained from Patent Center. Unpublished application information in Patent Center is available to registered users. To file and manage patent submissions in Patent Center, visit: https://patentcenter.uspto.gov. Visit https://www.uspto.gov/patents/apply/patent-center for more information about Patent Center and https://www.uspto.gov/patents/docx for information about filing in DOCX format. For additional questions, contact the

Electronic Business Center (EBC) at 866-217-9197 (toll-free). If you would like assistance from a USPTO Customer Service Representative, call 800-786-9199 (IN USA OR CANADA) or 571-272-1000.

/MIRAYDA A APONTE/
Examiner, Art Unit 3772

/RALPH A LEWIS/
Primary Examiner, Art Unit 3772

Search Notes	Application/Control No.	Applicant(s)/Patent Under Reexamination
	14/228,057	Nguyen et al.
	Examiner	Art Unit
	MIRAYDA A APONTE	3772

CPC - Searched*		
Symbol	**Date**	**Examiner**
A61C 17/043, 046	11/16/2015	HDM
Updated Search	05/31/2016	HDM
Update Search	09/04/2018	HDM
Update Search	03/18/2019	HDM
Update Search	10/01/2019	HDM
Updated search	08/21/2022	MA
A61C17/08,0208,06,00,02	08/21/2022	MA
A61C5/90	08/21/2022	MA
A61B1/24	08/21/2022	MA

CPC Combination Sets - Searched*		
Symbol	**Date**	**Examiner**

US Classification - Searched*			
Class	**Subclass**	**Date**	**Examiner**
433	91-92, 140	11/16/2015	HDM
	Updated search	08/21/2022	NA

* See search history printout included with this form or the SEARCH NOTES box below to determine the scope of the search.

/MIRAYDA A APONTE/ Examiner, Art Unit 3772	

Search Notes	Application/Control No.	Applicant(s)/Patent Under Reexamination
	14/228,057	Nguyen et al.
	Examiner	Art Unit
	MIRAYDA A APONTE	3772

Search Notes		
Search Notes	**Date**	**Examiner**
Inventor Search	11/16/2015	HDM
Review searches of parent case 14/100323	11/16/2015	HDM
Updated Search	05/31/2016	HDM
Update Search	04/03/2017	HDM
Update Search	10/30/2017	HDM
Update Search	09/04/2018	HDM
Update Search	03/18/2019	HDM
Update Search	10/01/2019	HDM
Update Search	05/11/2020	HDM
Update Search	05/03/2021	HDM
Update Search	11/06/2021	HDM
PE2ESearch	08/21/2022	MA
Word search on retractor, tongue, (suction vacuum) AND (tongue retract*), (suction vacuum), dental AND cheek WITH retractor AND suction, cheek WITH retractor AND suction	08/21/2022	MA
Back and fourth search	08/21/2022	MA
EPO search	08/21/2022	MA

Interference Search			
US Class/CPC Symbol	**US Subclass/CPC Group**	**Date**	**Examiner**

/MIRAYDA A APONTE/ Examiner, Art Unit 3772	

Index of Claims	Application/Control No.	Applicant(s)/Patent Under Reexamination
	14/228,057	Nguyen et al.
	Examiner	Art Unit
	MIRAYDA A APONTE	3772

✓	Rejected	-	Cancelled	N	Non-Elected	A	Appeal
=	Allowed	÷	Restricted	I	Interference	O	Objected

CLAIMS

☐ Claims renumbered in the same order as presented by applicant ☐ CPA ☐ T.D. ☐ R.1.47

CLAIM		DATE								
Final	Original	11/06/2021	08/21/2022							
	1	✓	✓							
	2	✓	✓							
	3	-	-							
	4	✓	✓							
	5	✓	✓							
	6	✓	✓							
	7	✓	✓							
	8	✓	✓							
	9	-	-							
	10	✓	✓							
	11	-	-							
	12	-	-							
	13	-	-							
	14	✓	✓							
	15	✓	✓							
	16	✓	✓							
	17	-	-							
	18	-	-							
	19	-	-							
	20	-	-							
	21	✓	✓							
	22	✓	✓							
	23	✓	✓							
	24	✓	✓							
	25	✓	✓							
	26	✓	✓							
	27	✓	✓							
	28	✓	✓							
	29	✓	✓							
	30	✓	✓							

Substitute for Form 1449/PTO

INFORMATION DISCLOSURE STATEMENT BY APPLICANT

(use as many sheets as necessary)

Complete if Known	
Application Number	14/228,057
Filing Date	March 27, 2014
First Named Inventor:	Thien Nguyen
Art Unit	3772
Examiner Name	Hao D. Mai
Attorney Docket Number	INCEP-001COD

Sheet	1	of	2

U.S. PATENT DOCUMENTS

Examiner Initials*	Cite No.'	Document Number Number-Kind Code[2](If known)		Publication Date MM-DD-YYYY	Name of Patentee or Applicant of Cited Document	Pages, Columns, Lines, Where Relevant Passages or Relevant Figures Appear
		US-	D267,586	1/11/1983	Hatlen	
		US-	4,975,057	12/4/1990	Dyfvermark	
		US-	5,730,599	3/24/1998	Pak	
		US-	6,652,276	11/25/2003	Fischer et al.	
		US-	6,655,960	12/2/2003	Fischer	
		US-	6,716,029	4/6/2004	Fischer et al.	
		US-	10,939,979	3/9/2021	Lombardi	
		US-	2018/0153637	6/7/2018	Al-Shawi et al.	
		US-	2020/0383560	12/10/2020	Day	
		US-				
		US-				
		US-				

FOREIGN PATENT DOCUMENTS

Examiner Initials*	Cite No.'	Foreign Patent Document Country Code[3] Number[4] Kind Codes (if known)	Publication Date MM-DD-YYYY	Name of Patentee or Applicant of Cited Document	Pages, Columns, Lines, Where Relevant Passages or Relevant Figures Appear	T6
		CA 3,139,689	11/19/2020	Dryshield, LLC		
		CN 104490483	4/8/2015	Huanghua Kangtian Medical Device		
		EP 3965637 (corresponds to WO 2020/231864)	3/16/2022	Dryshield, LLC		
		TW 202108088	3/1/2021	Dryshield, LLC		

Examiner Signature	/MIRAYDA A APONTE/	Date Considered	08/21/2022

*EXAMINER: Initial if reference considered, whether or not citation is in conformance with MPEP 609; Draw line through citation if not in conformance and not considered. Include copy of this form with next communication to applicant. 'Applicant's unique citation designation number (optional). [2]See Kinds Codes of USPTO Patent Documents at www.uspto.gov or MPEP 901.04. [3]Enter Office that issued the document, by the two-letter code (WIPO Standard ST.3). [4]For Japanese patent documents, the indication of the year of reign of the Emperor must precede the serial number of the patent document. [5]Kind of document by the appropriate symbols as indicated on the document under WIPO Standard ST. 16 if possible. [6]Applicant is to place a check mark here if English language translation is attached.

This collection of information is required by 37 CFR 1.97 and 1.98. The information is required to obtain or retain a benefit by the public which is to file (and by the USPTO to process) an application. Confidentiality is governed by 35 U.S.C. 122 and 37 CFR 1.14. This collection is estimated to take 2 hours to complete including gathering, preparing, and submitting the completed application form to the USPTO. Time will vary depending upon the individual case. Any comments on the amount of time you require to complete this form and/or suggestions for reducing this burden, should be sent to the Chief Information Officer, U.S. Patent and Trademark Office, P.O. Box 1450, Alexandria, VA 22313-1450. DO NOT SENT FEES OR COMPLETED FORMS TO THIS ADDRESS. **SEND TO: Commissioner for Patents, P.O. Box 1450, Alexandria, Virginia 22313-1450.**

If you need assistance in completing the form, call 1-800-PTO-9199 (1-800-786-9199) and select option 2.

ALL REFERENCES CONSIDERED EXCEPT WHERE LINED THROUGH. /M.A.A/

Substitute for Form 1449/PTO	Complete if Known	
INFORMATION DISCLOSURE STATEMENT BY APPLICANT *(use as many sheets as necessary)*	Application Number	14/228,057
	Filing Date	March 27, 2014
	First Named Inventor:	Thien Nguyen
	Art Unit	3772
	Examiner Name	Hao D. Mai
Sheet 2 of 2	Attorney Docket Number	INCEP-001COD

NON PATENT LITERATURE DOCUMENTS

Examiner Initials*	Cite No'	Include name of the author (in CAPITAL LETTERS), title of the article (when appropriate), title of the item (book, magazine, journal, serial, symposium, catalog, etc.), date, page(s), volume-issue number(s), publisher, city and/or country where published	T^2
		PCT Application No. PCT/US2020/032228 International Preliminary Report on Patentability dated 11/16/21	
		Docket No. INCEP-005 U.S. Patent Application 16/870,745 Final Office Action mailed 5/12/22	
		Docket No. INCEP-009D U.S. Patent Application 29/782,644 Final Office Action mailed 5/11/22	
		Docket No. INCEP-010D U.S. Patent Application 29/782,643 Final Office Action mailed 5/11/22	

Examiner Signature	/MIRAYDA A APONTE/	Date Considered	08/21/2022

*Examiner: Initial if reference considered, whether or not citation is in conformance with MPEP 609. Draw line through citation if not in conformance and not considered. Include copy of this form with next communication to applicant.

'Applicant's unique citation designation number (optional). 'Applicant is to place a check mark here if English Translation is attached.

This collection of information is required by 37 CFR 1.98. The information is required to obtain or retain a benefit by the public which is to file (and by the USPTO to process) an application. Confidentiality is governed by 35 U.S.C. 122 and 37 CFR 1.14. This collection is estimated to take 2 hours to complete including gathering, preparing, and submitting the completed application form to the USPTO. Time will vary depending upon the individual case. Any comments on the amount of time you require to complete this form and/or suggestions for reducing this burden, should be sent to the Chief Information Officer, U.S. Patent and Trademark Office, P.O. Box 1450, Alexandria, VA 22313-1450. DO NOT SENT FEES OR COMPLETED FORMS TO THIS ADDRESS. **SEND TO: Commissioner for Patents, P.O. Box 1450, Alexandria, Virginia 22313-1450.**

If you need assistance in completing the form, call 1-800-PTO-9199 (1-800-786-9199) and select option 2.

Based on Form PTO/SB/08B (08-03)

ALL REFERENCES CONSIDERED EXCEPT WHERE LINED THROUGH. /M.A.A/

PE2E SEARCH - Search History (Prior Art)

Ref #	Hits	Search Query	DBs	Default Operator	Plurals	British Equivalents	Time Stamp
L1	11074	(A61C17/08 OR A61C17/0208 OR A61C17/06 OR A61C17/00 OR A61C17/02).cpc. OR (433/93).ccls.	(US-PGPUB; USPAT; USOCR; FIT (CN, FR, WO); FPRS; EPO; JPO; DERWENT; IBM_TDB)	OR	ON	ON	2022/07/19 02:25 PM
L2	6	("20040033468" OR "20140349249" OR "3453735" OR "3516160" OR "D364456" OR "D663831").pn.	(US-PGPUB; USPAT)	OR	ON	ON	2022/07/19 02:26 PM
L3	5	("20060063129" OR "3758950" OR "4167814" OR "20030134253" OR "2019612").pn.	(US-PGPUB; USPAT)	OR	ON	ON	2022/07/19 02:34 PM
L4	8	("10390734" OR "10390916" OR "20120015317" OR "20170156831" OR "20170156833" OR "20200155284" OR "5720275" OR "6672305").pn.	(US-PGPUB; USPAT)	OR	ON	ON	2022/07/19 02:36 PM
L5	35	("2992161" "10654392" "0042939" "0061031" "2018126150").pn.	(US-PGPUB; USPAT; USOCR; FIT (CN, FR, WO); FPRS; EPO; JPO; DERWENT; IBM_TDB)	OR	ON	ON	2022/07/19 02:38 PM
L6	1	("4975057").pn.	(US-PGPUB; USPAT)	OR	ON	ON	2022/07/19 02:50 PM
L7	26	(US-0153637-$ | US-0383560-$ | US-10939979-$ | US-20180153637-$ | US-20200383560-$ | US-4975057-$ | US-5730599-$ | US-6652276-$ | US-6655960-$ | US-6716029-$ | US-D267586-$).DID. OR (CA-3139689-$ | CN-104490483-$ | EP-3965637-$ | TW-202108088-$ | VA-223131450-$).DID.	(US-PGPUB; USPAT; USOCR; FIT (CN, FR, WO); FPRS; EPO; JPO; DERWENT; IBM_TDB)	OR	ON	ON	2022/07/19 02:52 PM
L8	3	("20060063129").did.	(US-PGPUB; USPAT; USOCR; FIT (CN, FR, WO); FPRS; EPO;	OR	ON	ON	2022/07/20 08:00 AM

			JPO; DERWENT; IBM_TDB)				
L9	526	(aponte).xa.	(US-PGPUB; USPAT; USOCR; FIT (CN, FR, WO); FPRS; EPO; JPO; DERWENT; IBM_TDB)	OR	ON	ON	2022/07/20 08:47 AM
L12	8	L9 AND retractor	(US-PGPUB; USPAT; USOCR; FIT (CN, FR, WO); FPRS; EPO; JPO; DERWENT; IBM_TDB)	OR	ON	ON	2022/07/20 08:48 AM
L13	1	L9 AND L1	(US-PGPUB; USPAT; USOCR; FIT (CN, FR, WO); FPRS; EPO; JPO; DERWENT; IBM_TDB)	OR	ON	ON	2022/07/20 08:50 AM
L16	54	L9 AND (tongue)	(US-PGPUB; USPAT; USOCR; FIT (CN, FR, WO); FPRS; EPO; JPO; DERWENT; IBM_TDB)	OR	ON	ON	2022/07/20 08:52 AM
L17	3	("5730599" | "6022214" | "20030134253").pn. OR ("9827071").urpn. AND (PGPB | USPT | USOC).dbnm.	(US-PGPUB; USPAT; USOCR)	OR	ON	ON	2022/07/20 08:57 AM
L18	33	("20905" | "2220674" | "3924333" | "4053984" | "4167814" | "5340313" | "5588836" | "5590643" | "5735691" | "5890899" | "6244866").pn. OR ("6655960").urpn. AND (PGPB | USPT | USOC).dbnm.	(US-PGPUB; USPAT; USOCR)	OR	ON	ON	2022/07/20 09:00 AM
L19	8	("2006/0063129").urpn. AND (PGPB | USPT | USOC).dbnm.	(US-PGPUB; USPAT; USOCR)	OR	ON	ON	2022/07/21 07:57 AM
L20	26	L1 AND tongue WITH restrain*	(US-PGPUB; USPAT; USOCR; FIT (CN, FR, WO); FPRS; EPO; JPO; DERWENT; IBM_TDB)	OR	ON	ON	2022/07/21 08:51 AM
L21	240	L1 AND tongue WITH retract*	(US-PGPUB; USPAT; USOCR; FIT (CN, FR, WO); FPRS; EPO; JPO; DERWENT; IBM_TDB)	OR	ON	ON	2022/07/21 08:54 AM
L22	1282	L1 AND (suction vacuum) AND (tongue retract*)	(US-PGPUB; USPAT; USOCR; FIT (CN, FR, WO); FPRS; EPO; JPO; DERWENT; IBM_TDB)	OR	ON	ON	2022/07/21 09:13 AM

L23	594	L1 AND (suction vacuum) AND (retract*)	(US-PGPUB; USPAT; USOCR; FIT (CN, FR, WO); FPRS; EPO; JPO; DERWENT; IBM_TDB)	OR	ON	ON	2022/07/21 09:13 AM
L24	14	("4802851" "5890899" "20090274991" "20060063129").did.	(US-PGPUB; USPAT; USOCR; FIT (CN, FR, WO); FPRS; EPO; JPO; DERWENT; IBM_TDB)	OR	ON	ON	2022/07/21 10:54 AM
L25	65	("9788924" "2851861" "105578986" "102026587" "102247140" "4083115" "5762496" "9084656" "9358086" "20030134253" "2019612" "9788924").did.	(US-PGPUB; USPAT; USOCR; FIT (CN, FR, WO); FPRS; EPO; JPO; DERWENT; IBM_TDB)	OR	ON	ON	2022/07/21 11:01 AM
L26	361	dental AND cheek WITH retractor AND suction	(US-PGPUB; USPAT; USOCR; FIT (CN, FR, WO); FPRS; EPO; JPO; DERWENT; IBM_TDB)	OR	ON	ON	2022/08/19 01:12 PM
L27	14170	(A61C5/90 OR A61B1/24 OR A61C17/08).cpc.	(US-PGPUB; USPAT; USOCR; FIT (CN, FR, WO); FPRS; EPO; JPO; DERWENT; IBM_TDB)	OR	ON	ON	2022/08/19 02:00 PM
L28	218	L27 AND cheek WITH retractor AND suction	(US-PGPUB; USPAT; USOCR; FIT (CN, FR, WO); FPRS; EPO; JPO; DERWENT; IBM_TDB)	OR	ON	ON	2022/08/19 02:01 PM
L29	60	("1122086" | "4495945" | "4592344" | "4643172" | "4802851" | "4975057" | "4996976" | "5009595" | "5152686" | "5232362" | "5281134" | "5588836" | "5762496" | "5769635").pn. OR ("6022214").urpn. AND (PGPB | USPT | USOC).dbnm.	(US-PGPUB; USPAT; USOCR)	OR	ON	ON	2022/08/19 02:19 PM
L30	42	("1122086" | "4495945" | "4592344" | "4643172" | "4802851" | "4975057" | "4996976" | "5009595" | "5152686" | "5232362" | "5281134" | "5588836" | "5762496" | "5769635" | "6022214").pn. OR ("6338627").urpn. AND (PGPB | USPT | USOC).dbnm.	(US-PGPUB; USPAT; USOCR)	OR	ON	ON	2022/08/19 02:22 PM

L31	72	("1122086" | "3049806" | "3881254" | "4071026" | "4167814" | "4259067" | "4495945" | "4592344" | "4643172" | "4802851" | "4865545" | "4975057" | "4992046" | "4996976" | "5009595" | "5071347" | "5078602" | "5152686" | "5232362" | "5281134" | "5462435" | "5513986" | "5588836" | "5762496" | "5769635" | "5873718" | "6022214" | "6338627" | "20030143512").pn. OR ("D495799").urpn. AND (PGPB | USPT | USOC).dbnm.	(US-PGPUB; USPAT; USOCR)	OR	ON	ON	2022/08/19 02:23 PM
L32	3	("20060063129").did.	(US-PGPUB; USPAT; USOCR; FIT (CN, FR, WO); FPRS; EPO; JPO; DERWENT; IBM_TDB)	OR	ON	ON	2022/08/21 06:25 AM
L33	6	("2017156832" "20140212838").did.	(US-PGPUB; USPAT; USOCR; FIT (CN, FR, WO); FPRS; EPO; JPO; DERWENT; IBM_TDB)	OR	ON	ON	2022/08/21 07:45 AM
L34	4	("20170156832" "20140212838").did.	(US-PGPUB; USPAT; USOCR; FIT (CN, FR, WO); FPRS; EPO; JPO; DERWENT; IBM_TDB)	OR	ON	ON	2022/08/21 07:46 AM
L35	10	("2014/0212838").urpn. AND (PGPB | USPT | USOC).dbnm.	(US-PGPUB; USPAT; USOCR)	OR	ON	ON	2022/08/21 07:47 AM
L36	3	("20060063129").did.	(US-PGPUB; USPAT; USOCR; FIT (CN, FR, WO); FPRS; EPO; JPO; DERWENT; IBM_TDB)	OR	ON	ON	2022/08/21 09:55 AM
L37	752	(A61C17/043 OR A61C17/046).cpc.	(US-PGPUB; USPAT; USOCR; FIT (CN, FR, WO); FPRS; EPO; JPO; DERWENT; IBM_TDB)	OR	ON	ON	2022/08/21 11:02 AM
L38	8	L37 AND cheek WITH retractor AND suction	(US-PGPUB; USPAT; USOCR; FIT (CN, FR, WO); FPRS; EPO; JPO; DERWENT; IBM_TDB)	OR	ON	ON	2022/08/21 11:02 AM
L39	43	(433/91-92,140).ccls. AND cheek WITH retractor AND suction	(US-PGPUB; USPAT; USOCR; FIT (CN, FR, WO); FPRS; EPO; JPO; DERWENT;	OR	ON	ON	2022/08/21 11:04 AM

			IBM_TDB)				

PE2E SEARCH - Search History (Interference)

There are no Interference searches to show.

Doc code: IDS
Doc description: Information Disclosure Statement (IDS) Filed

PTO/SB/08a (02-18)
Approved for use through 11/30/2020. OMB 0651-0031
U.S. Patent and Trademark Office; U.S. DEPARTMENT OF COMMERCE
Under the Paperwork Reduction Act of 1995, no persons are required to respond to a collection of information unless it contains a valid OMB control number.

INFORMATION DISCLOSURE STATEMENT BY APPLICANT

(Not for submission under 37 CFR 1.99)

Application Number	14228057
Filing Date	2014-03-27
First Named Inventor	NGUYEN; Thien
Art Unit	3772
Examiner Name	MAI, HAO D
Attorney Docket Number	084892-514250

U.S.PATENTS

Examiner Initial*	Cite No	Patent Number	Kind Code[1]	Issue Date	Name of Patentee or Applicant of cited Document	Pages,Columns,Lines where Relevant Passages or Relevant Figures Appear
	1	None				

If you wish to add additional U.S. Patent citation information please click the Add button.

U.S.PATENT APPLICATION PUBLICATIONS

Examiner Initial*	Cite No	Publication Number	Kind Code[1]	Publication Date	Name of Patentee or Applicant of cited Document	Pages,Columns,Lines where Relevant Passages or Relevant Figures Appear
	1	None				

If you wish to add additional U.S. Published Application citation information please click the Add button.

FOREIGN PATENT DOCUMENTS

Examiner Initial*	Cite No	Foreign Document Nu	Country Code[2] i	Kind Code[4]	Publication Date	Name of Patentee or Applicant of cited Document	Pages,Columns,Lines where Relevant Passages or Relevant Figures Appear	T[5]
	1	None						☐

If you wish to add additional Foreign Patent Document citation information please click the Add button

NON-PATENT LITERATURE DOCUMENTS

Examiner Initials*	Cite No	Include name of the author (in CAPITAL LETTERS), title of the article (when appropriate), title of the item (book, magazine, journal, serial, symposium, catalog, etc), date, pages(s), volume-issue number(s), publisher, city and/or country where published.	T[5]

ALL REFERENCES CONSIDERED EXCEPT WHERE LINED THROUGH. /M.A.A/

INFORMATION DISCLOSURE STATEMENT BY APPLICANT (Not for submission under 37 CFR 1.99)		
	Application Number	14228057
	Filing Date	2014-03-27
	First Named Inventor	NGUYEN; Thien
	Art Unit	3772
	Examiner Name	MAI, HAO D
	Attorney Docket Number	084892-514250

	1	Docket No. INCEP-001COC U.S. Patent Application 14/228,054; Office Action mailed 6/25/21.	☐

If you wish to add additional non-patent literature document citation information please click the Add button

EXAMINER SIGNATURE

Examiner Signature	/MIRAYDA A APONTE/	Date Considered	07/19/2022

*EXAMINER: Initial if reference considered, whether or not citation is in conformance with MPEP 609. Draw line through a citation if not in conformance and not considered. Include copy of this form with next communication to applicant.

[1] See Kind Codes of USPTO Patent Documents at www.USPTO.GOV or MPEP 901.04. [2] Enter office that issued the document, by the two-letter code (WIPO Standard ST.3). [3] For Japanese patent documents, the indication of the year of the reign of the Emperor must precede the serial number of the patent document. [4] Kind of document by the appropriate symbols as indicated on the document under WIPO Standard ST.16 if possible. [5] Applicant is to place a check mark here if English language translation is attached.

ALL REFERENCES CONSIDERED EXCEPT WHERE LINED THROUGH. /M.A.A/

INFORMATION DISCLOSURE STATEMENT BY APPLICANT

(**Not for submission under 37 CFR 1.99)**

Application Number	14228057
Filing Date	2014-03-27
First Named Inventor	NGUYEN; Thien
Art Unit	3772
Examiner Name	MAI, HAO D
Attorney Docket Number	084892-514250

CERTIFICATION STATEMENT

Please see 37 CFR 1.97 and 1.98 to make the appropriate selection(s):

☐ That each item of information contained in the information disclosure statement was first cited in any communication from a foreign patent office in a counterpart foreign application not more than three months prior to the filing of the information disclosure statement. See 37 CFR 1.97(e)(1).

OR

☐ That no item of information contained in the information disclosure statement was cited in a communication from a foreign patent office in a counterpart foreign application, and, to the knowledge of the person signing the certification after making reasonable inquiry, no item of information contained in the information disclosure statement was known to any individual designated in 37 CFR 1.56(c) more than three months prior to the filing of the information disclosure statement. See 37 CFR 1.97(e)(2).

☐ See attached certification statement.

☐ The fee set forth in 37 CFR 1.17 (p) has been submitted herewith.

☐ A certification statement is not submitted herewith.

SIGNATURE

A signature of the applicant or representative is required in accordance with CFR 1.33, 10.18. Please see CFR 1.4(d) for the form of the signature.

Signature	/Ruby L. Chung/	Date (YYYY-MM-DD)	2021-11-24
Name/Print	Ruby L. Chung	Registration Number	76809

This collection of information is required by 37 CFR 1.97 and 1.98. The information is required to obtain or retain a benefit by the public which is to file (and by the USPTO to process) an application. Confidentiality is governed by 35 U.S.C. 122 and 37 CFR 1.14. This collection is estimated to take 1 hour to complete, including gathering, preparing and submitting the completed application form to the USPTO. Time will vary depending upon the individual case. Any comments on the amount of time you require to complete this form and/or suggestions for reducing this burden, should be sent to the Chief Information Officer, U.S. Patent and Trademark Office, U.S. Department of Commerce, P.O. Box 1450, Alexandria, VA 22313-1450. DO NOT SEND FEES OR COMPLETED FORMS TO THIS ADDRESS. **SEND TO: Commissioner for Patents, P.O. Box 1450, Alexandria, VA 22313-1450.**

ALL REFERENCES CONSIDERED EXCEPT WHERE LINED THROUGH. /M.A.A/

Privacy Act Statement

The Privacy Act of 1974 (P.L. 93-579) requires that you be given certain information in connection with your submission of the attached form related to a patent application or patent. Accordingly, pursuant to the requirements of the Act, please be advised that: (1) the general authority for the collection of this information is 35 U.S.C. 2(b)(2); (2) furnishing of the information solicited is voluntary; and (3) the principal purpose for which the information is used by the U.S. Patent and Trademark Office is to process and/or examine your submission related to a patent application or patent. If you do not furnish the requested information, the U.S. Patent and Trademark Office may not be able to process and/or examine your submission, which may result in termination of proceedings or abandonment of the application or expiration of the patent.

The information provided by you in this form will be subject to the following routine uses:

1. The information on this form will be treated confidentially to the extent allowed under the Freedom of Information Act (5 U.S.C. 552) and the Privacy Act (5 U.S.C. 552a). Records from this system of records may be disclosed to the Department of Justice to determine whether the Freedom of Information Act requires disclosure of these record s.

2. A record from this system of records may be disclosed, as a routine use, in the course of presenting evidence to a court, magistrate, or administrative tribunal, including disclosures to opposing counsel in the course of settlement negotiations.

3. A record in this system of records may be disclosed, as a routine use, to a Member of Congress submitting a request involving an individual, to whom the record pertains, when the individual has requested assistance from the Member with respect to the subject matter of the record.

4. A record in this system of records may be disclosed, as a routine use, to a contractor of the Agency having need for the information in order to perform a contract. Recipients of information shall be required to comply with the requirements of the Privacy Act of 1974, as amended, pursuant to 5 U.S.C. 552a(m).

5. A record related to an International Application filed under the Patent Cooperation Treaty in this system of records may be disclosed, as a routine use, to the International Bureau of the World Intellectual Property Organization, pursuant to the Patent Cooperation Treaty.

6. A record in this system of records may be disclosed, as a routine use, to another federal agency for purposes of National Security review (35 U.S.C. 181) and for review pursuant to the Atomic Energy Act (42 U.S.C. 218(c)).

7. A record from this system of records may be disclosed, as a routine use, to the Administrator, General Services, or his/her designee, during an inspection of records conducted by GSA as part of that agency's responsibility to recommend improvements in records management practices and programs, under authority of 44 U.S.C. 2904 and 2906. Such disclosure shall be made in accordance with the GSA regulations governing inspection of records for this purpose, and any other relevant (i.e., GSA or Commerce) directive. Such disclosure shall not be used to make determinations about individuals.

8. A record from this system of records may be disclosed, as a routine use, to the public after either publication of the application pursuant to 35 U.S.C. 122(b) or issuance of a patent pursuant to 35 U.S.C. 151. Further, a record may be disclosed, subject to the limitations of 37 CFR 1.14, as a routine use, to the public if the record was filed in an application which became abandoned or in which the proceedings were terminated and which application is referenced by either a published application, an application open to public inspections or an issued patent.

9. A record from this system of records may be disclosed, as a routine use, to a Federal, State, or local law enforcement agency, if the USPTO becomes aware of a violation or potential violation of law or regulation.

ALL REFERENCES CONSIDERED EXCEPT WHERE LINED THROUGH. /M.A.A/

Doc code: IDS
Doc description: Information Disclosure Statement (IDS) Filed

PTO/SB/08a (02-18)
Approved for use through 11/30/2020. OMB 0651-0031
U.S. Patent and Trademark Office; U.S. DEPARTMENT OF COMMERCE
Under the Paperwork Reduction Act of 1995, no persons are required to respond to a collection of information unless it contains a valid OMB control number.

INFORMATION DISCLOSURE STATEMENT BY APPLICANT

(Not for submission under 37 CFR 1.99)

Application Number	14228057
Filing Date	2014-03-27
First Named Inventor	NGUYEN; Thien
Art Unit	3772
Examiner Name	MAI, HAO D
Attorney Docket Number	084892-514250

U.S.PATENTS

Examiner Initial*	Cite No	Patent Number	Kind Code[1]	Issue Date	Name of Patentee or Applicant of cited Document	Pages,Columns,Lines where Relevant Passages or Relevant Figures Appear
	1	D364456		1995-11-21	SOLNIT; Albert et al.	
	2	D663831		2012-07-17	SIDHU; Jessy S. et al.	
	3	3453735		1969-07-08	BURT; Richard E. et al.	
	4	3516160		1970-06-23	LEFFLER; Dennis F. et al.	

If you wish to add additional U.S. Patent citation information please click the Add button.

U.S.PATENT APPLICATION PUBLICATIONS

Examiner Initial*	Cite No	Publication Number	Kind Code[1]	Publication Date	Name of Patentee or Applicant of cited Document	Pages,Columns,Lines where Relevant Passages or Relevant Figures Appear
	1	20040033468		2004-02-19	FISCHER; Dan E. et al.	
	2	20140349249		2014-11-27	REYES; Hari Mark	

If you wish to add additional U.S. Published Application citation information please click the Add button.

FOREIGN PATENT DOCUMENTS

ALL REFERENCES CONSIDERED EXCEPT WHERE LINED THROUGH. /M.A.A/

INFORMATION DISCLOSURE STATEMENT BY APPLICANT (Not for submission under 37 CFR 1.99)		
	Application Number	14228057
	Filing Date	2014-03-27
	First Named Inventor	NGUYEN; Thien
	Art Unit	3772
	Examiner Name	MAI, HAO D
	Attorney Docket Number	084892-514250

Examiner Initial*	Cite No	Foreign Document Nu	Country Code[2]	Kind Code[4]	Publication Date	Name of Patentee or Applicant of cited Document	Pages,Columns,Lines where Relevant Passages or Relevant Figures Appear	T[5]
	1	None						☐

If you wish to add additional Foreign Patent Document citation information please click the Add button

NON-PATENT LITERATURE DOCUMENTS

Examiner Initials*	Cite No	Include name of the author (in CAPITAL LETTERS), title of the article (when appropriate), title of the item (book, magazine, journal, serial, symposium, catalog, etc), date, pages(s), volume-issue number(s), publisher, city and/or country where published.	T[5]
	1	Docket No. INCEP-001COA U.S. Application 14/228, 046; Non-Final Office Action mailed 10-6-21.	☐
	2	Docket No. INCEP-006D U.S. Application 29/782,645; Non-Final Office Action mailed 10-4-21.	☐
	3	Docket No. INCEP-008D U.S. Application 29/782,638; Non-Final Office Action mailed 10-4-21.	☐
	4	Docket No. INCEP-009D U.S. Application 29/782,644; Non-Final Office Action mailed 10-4-21.	☐
	5	Docket No. INCEP-010D U.S. Application 29/782,643; Non-Final Office Action mailed 10-4-21.	☐
	6	Dryshield brochure. Dryshield.com. Publish date: May 2019. Retrieval date: 15 September 2021. Retrieved from internet: https:// dryshield.com/ds/Brochure_May2019.pdf (Year: 2019).	☐
	7	"Dryshield Presentation (Learn all about Dryshield)" posted by Dryshield Isolation System. Youtube. Posting date: 27 October 2014.Retrieval date: 15 September 2021. Retrieved from internet: https://www.youtube.com/watch?v=fcbpz3ixvis (Year: 2014).	☐

ALL REFERENCES CONSIDERED EXCEPT WHERE LINED THROUGH. /M.A.A/

INFORMATION DISCLOSURE STATEMENT BY APPLICANT (Not for submission under 37 CFR 1.99)		
	Application Number	14228057
	Filing Date	2014-03-27
	First Named Inventor	NGUYEN; Thien
	Art Unit	3772
	Examiner Name	MAI, HAO D
	Attorney Docket Number	084892-514250

	8	"Dryshield (single-use) vs Zryis/Isolite (single-use) mouthpieces" posted by Mark Frias, RDH. Youtube. Posting date: 18 January 2020. Retrieval date: 15 September 2021. Retrieved from internet: https://www.youtube.com/watch?v=uKX9XahO6EY (Year: 2020).	☐
	9	"Dryshield Tutorial - Maximize Your Dryshield Experience" posted by Dryshield Isolation System. Youtube. Posting date: 15 April2015. Retrieval date: 15 September 2021. Retrieved from internet: https://www.youtube.com/watch?v=L2OSYPS8Rc4 (Year: 2015).	☐

If you wish to add additional non-patent literature document citation information please click the Add button

EXAMINER SIGNATURE

Examiner Signature	/MIRAYDA A APONTE/	Date Considered	07/19/2022

*EXAMINER: Initial if reference considered, whether or not citation is in conformance with MPEP 609. Draw line through a citation if not in conformance and not considered. Include copy of this form with next communication to applicant.

[1] See Kind Codes of USPTO Patent Documents at www.USPTO.GOV or MPEP 901.04. [2] Enter office that issued the document, by the two-letter code (WIPO Standard ST.3). [3] For Japanese patent documents, the indication of the year of the reign of the Emperor must precede the serial number of the patent document. [4] Kind of document by the appropriate symbols as indicated on the document under WIPO Standard ST.16 if possible. [5] Applicant is to place a check mark here if English language translation is attached.

ALL REFERENCES CONSIDERED EXCEPT WHERE LINED THROUGH. /M.A.A/

INFORMATION DISCLOSURE STATEMENT BY APPLICANT

(**Not for submission under 37 CFR 1.99)**

Application Number	14228057
Filing Date	2014-03-27
First Named Inventor	NGUYEN; Thien
Art Unit	3772
Examiner Name	MAI, HAO D
Attorney Docket Number	084892-514250

CERTIFICATION STATEMENT

Please see 37 CFR 1.97 and 1.98 to make the appropriate selection(s):

☐ That each item of information contained in the information disclosure statement was first cited in any communication from a foreign patent office in a counterpart foreign application not more than three months prior to the filing of the information disclosure statement. See 37 CFR 1.97(e)(1).

OR

☒ That no item of information contained in the information disclosure statement was cited in a communication from a foreign patent office in a counterpart foreign application, and, to the knowledge of the person signing the certification after making reasonable inquiry, no item of information contained in the information disclosure statement was known to any individual designated in 37 CFR 1.56(c) more than three months prior to the filing of the information disclosure statement. See 37 CFR 1.97(e)(2).

☐ See attached certification statement.

☐ The fee set forth in 37 CFR 1.17 (p) has been submitted herewith.

☐ A certification statement is not submitted herewith.

SIGNATURE

A signature of the applicant or representative is required in accordance with CFR 1.33, 10.18. Please see CFR 1.4(d) for the form of the signature.

Signature	/Ruby L. Chung/	Date (YYYY-MM-DD)	2021-11-24
Name/Print	Ruby L. Chung	Registration Number	76809

This collection of information is required by 37 CFR 1.97 and 1.98. The information is required to obtain or retain a benefit by the public which is to file (and by the USPTO to process) an application. Confidentiality is governed by 35 U.S.C. 122 and 37 CFR 1.14. This collection is estimated to take 1 hour to complete, including gathering, preparing and submitting the completed application form to the USPTO. Time will vary depending upon the individual case. Any comments on the amount of time you require to complete this form and/or suggestions for reducing this burden, should be sent to the Chief Information Officer, U.S. Patent and Trademark Office, U.S. Department of Commerce, P.O. Box 1450, Alexandria, VA 22313-1450. DO NOT SEND FEES OR COMPLETED FORMS TO THIS ADDRESS. **SEND TO: Commissioner for Patents, P.O. Box 1450, Alexandria, VA 22313-1450.**

ALL REFERENCES CONSIDERED EXCEPT WHERE LINED THROUGH. /M.A.A/

Privacy Act Statement

The Privacy Act of 1974 (P.L. 93-579) requires that you be given certain information in connection with your submission of the attached form related to a patent application or patent. Accordingly, pursuant to the requirements of the Act, please be advised that: (1) the general authority for the collection of this information is 35 U.S.C. 2(b)(2); (2) furnishing of the information solicited is voluntary; and (3) the principal purpose for which the information is used by the U.S. Patent and Trademark Office is to process and/or examine your submission related to a patent application or patent. If you do not furnish the requested information, the U.S. Patent and Trademark Office may not be able to process and/or examine your submission, which may result in termination of proceedings or abandonment of the application or expiration of the patent.

The information provided by you in this form will be subject to the following routine uses:

1. The information on this form will be treated confidentially to the extent allowed under the Freedom of Information Act (5 U.S.C. 552) and the Privacy Act (5 U.S.C. 552a). Records from this system of records may be disclosed to the Department of Justice to determine whether the Freedom of Information Act requires disclosure of these record s.

2. A record from this system of records may be disclosed, as a routine use, in the course of presenting evidence to a court, magistrate, or administrative tribunal, including disclosures to opposing counsel in the course of settlement negotiations.

3. A record in this system of records may be disclosed, as a routine use, to a Member of Congress submitting a request involving an individual, to whom the record pertains, when the individual has requested assistance from the Member with respect to the subject matter of the record.

4. A record in this system of records may be disclosed, as a routine use, to a contractor of the Agency having need for the information in order to perform a contract. Recipients of information shall be required to comply with the requirements of the Privacy Act of 1974, as amended, pursuant to 5 U.S.C. 552a(m).

5. A record related to an International Application filed under the Patent Cooperation Treaty in this system of records may be disclosed, as a routine use, to the International Bureau of the World Intellectual Property Organization, pursuant to the Patent Cooperation Treaty.

6. A record in this system of records may be disclosed, as a routine use, to another federal agency for purposes of National Security review (35 U.S.C. 181) and for review pursuant to the Atomic Energy Act (42 U.S.C. 218(c)).

7. A record from this system of records may be disclosed, as a routine use, to the Administrator, General Services, or his/her designee, during an inspection of records conducted by GSA as part of that agency's responsibility to recommend improvements in records management practices and programs, under authority of 44 U.S.C. 2904 and 2906. Such disclosure shall be made in accordance with the GSA regulations governing inspection of records for this purpose, and any other relevant (i.e., GSA or Commerce) directive. Such disclosure shall not be used to make determinations about individuals.

8. A record from this system of records may be disclosed, as a routine use, to the public after either publication of the application pursuant to 35 U.S.C. 122(b) or issuance of a patent pursuant to 35 U.S.C. 151. Further, a record may be disclosed, subject to the limitations of 37 CFR 1.14, as a routine use, to the public if the record was filed in an application which became abandoned or in which the proceedings were terminated and which application is referenced by either a published application, an application open to public inspections or an issued patent.

9. A record from this system of records may be disclosed, as a routine use, to a Federal, State, or local law enforcement agency, if the USPTO becomes aware of a violation or potential violation of law or regulation.

EFS Web 2.1.18

ALL REFERENCES CONSIDERED EXCEPT WHERE LINED THROUGH. /M.A.A/

Doc code: IDS
Doc description: Information Disclosure Statement (IDS) Filed

PTO/SB/08a (02-18)
Approved for use through 11/30/2020. OMB 0651-0031
U.S. Patent and Trademark Office; U.S. DEPARTMENT OF COMMERCE
Under the Paperwork Reduction Act of 1995, no persons are required to respond to a collection of information unless it contains a valid OMB control number.

INFORMATION DISCLOSURE STATEMENT BY APPLICANT

(Not for submission under 37 CFR 1.99)

Application Number	14228057
Filing Date	2014-03-27
First Named Inventor	NGUYEN; Thien
Art Unit	3772
Examiner Name	MAI, HAO D
Attorney Docket Number	084892-514250

U.S.PATENTS Remove

Examiner Initial*	Cite No	Patent Number	Kind Code[1]	Issue Date	Name of Patentee or Applicant of cited Document	Pages,Columns,Lines where Relevant Passages or Relevant Figures Appear
	1	5720275		1998-02-24	PATIL et al.	
	2	6672305		2004-01-06	PARKER; Jeffrey D.	
	3	10390734		2019-08-27	JOHNSON et al.	
	4	10390916		2019-08-27	RASSIBI; Edmond	

If you wish to add additional U.S. Patent citation information please click the Add button. Add

U.S.PATENT APPLICATION PUBLICATIONS Remove

Examiner Initial*	Cite No	Publication Number	Kind Code[1]	Publication Date	Name of Patentee or Applicant of cited Document	Pages,Columns,Lines where Relevant Passages or Relevant Figures Appear
	1	20120015317		2012-01-19	MILO; Anton G. C.	
	2	20170156831		2017-06-08	REYES; Hari Mark	

ALL REFERENCES CONSIDERED EXCEPT WHERE LINED THROUGH. /M.A.A/

INFORMATION DISCLOSURE STATEMENT BY APPLICANT (Not for submission under 37 CFR 1.99)		
	Application Number	14228057
	Filing Date	2014-03-27
	First Named Inventor	NGUYEN; Thien
	Art Unit	3772
	Examiner Name	MAI, HAO D
	Attorney Docket Number	084892-514250

	3	20170156833		2017-06-08	REYES; Hari Mark		
	4	20200155284		2020-05-21	BAKER; Gary		

If you wish to add additional U.S. Published Application citation information please click the Add button. Add

FOREIGN PATENT DOCUMENTS Remove

Examiner Initial*	Cite No	Foreign Document Number[3]	Country Code[2]	Kind Code[4]	Publication Date	Name of Patentee or Applicant of cited Document	Pages,Columns,Lines where Relevant Passages or Relevant Figures Appear	T[5]
	1	2992161	FR	A1	2013-12-27	BRAUD VINCENT [FR]		
	2	100654392	KR	B1	2006-12-06	KIM JAE SOO [KR]		X
	3	0042939	WO	A1	2000-07-27	ENGERON MICHAEL G [US]		☐
	4	0061031	WO	A1	2000-10-19	COSTELLO WILLIAM J [US]		☐
	5	2018126150	WO	A1	2018-07-05	NOVO DENT LLC [US]		☐

If you wish to add additional Foreign Patent Document citation information please click the Add button Add

NON-PATENT LITERATURE DOCUMENTS Remove

Examiner Initials*	Cite No	Include name of the author (in CAPITAL LETTERS), title of the article (when appropriate), title of the item (book, magazine, journal, serial, symposium, catalog, etc), date, pages(s), volume-issue number(s), publisher, city and/or country where published.	T[5]

ALL REFERENCES CONSIDERED EXCEPT WHERE LINED THROUGH. /M.A.A/

INFORMATION DISCLOSURE STATEMENT BY APPLICANT (Not for submission under 37 CFR 1.99)		
	Application Number	14228057
	Filing Date	2014-03-27
	First Named Inventor	NGUYEN; Thien
	Art Unit	3772
	Examiner Name	MAI, HAO D
	Attorney Docket Number	084892-514250

	1	Docket No. INCEP-001COC U.S. Patent Application 14/228,054; Final Office Action mailed 1-3-22.
	2	Docket No. INCEP-001COE U.S. Patent Application 14/228,061; Non-Final Office Action mailed 12-8-21.
	3	Docket No. INCEP-005 U.S. Patent Application 16/870,745 Non-Final Office Action mailed 12-3-21.

If you wish to add additional non-patent literature document citation information please click the Add button Add

EXAMINER SIGNATURE

Examiner Signature	/MIRAYDA A APONTE/	Date Considered	07/19/2022

*EXAMINER: Initial if reference considered, whether or not citation is in conformance with MPEP 609. Draw line through a citation if not in conformance and not considered. Include copy of this form with next communication to applicant.

[1] See Kind Codes of USPTO Patent Documents at www.USPTO.GOV or MPEP 901.04. [2] Enter office that issued the document, by the two-letter code (WIPO Standard ST.3). [3] For Japanese patent documents, the indication of the year of the reign of the Emperor must precede the serial number of the patent document. [4] Kind of document by the appropriate symbols as indicated on the document under WIPO Standard ST.16 if possible. [5] Applicant is to place a check mark here if English language translation is attached.

ALL REFERENCES CONSIDERED EXCEPT WHERE LINED THROUGH. /M.A.A/

INFORMATION DISCLOSURE STATEMENT BY APPLICANT

(Not for submission under 37 CFR 1.99)

Application Number	14228057
Filing Date	2014-03-27
First Named Inventor	NGUYEN; Thien
Art Unit	3772
Examiner Name	MAI, HAO D
Attorney Docket Number	084892-514250

CERTIFICATION STATEMENT

Please see 37 CFR 1.97 and 1.98 to make the appropriate selection(s):

That each item of information contained in the information disclosure statement was first cited in any communication from a foreign patent office in a counterpart foreign application not more than three months prior to the filing of the information disclosure statement. See 37 CFR 1.97(e)(1).

OR

☒ That no item of information contained in the information disclosure statement was cited in a communication from a foreign patent office in a counterpart foreign application, and, to the knowledge of the person signing the certification after making reasonable inquiry, no item of information contained in the information disclosure statement was known to any individual designated in 37 CFR 1.56(c) more than three months prior to the filing of the information disclosure statement. See 37 CFR 1.97(e)(2).

See attached certification statement.

The fee set forth in 37 CFR 1.17 (p) has been submitted herewith.

A certification statement is not submitted herewith.

SIGNATURE

A signature of the applicant or representative is required in accordance with CFR 1.33, 10.18. Please see CFR 1.4(d) for the form of the signature.

Signature	/Tam Thanh Pham/	Date (YYYY-MM-DD)	2022-03-02
Name/Print	Tam Thanh Pham	Registration Number	50565

This collection of information is required by 37 CFR 1.97 and 1.98. The information is required to obtain or retain a benefit by the public which is to file (and by the USPTO to process) an application. Confidentiality is governed by 35 U.S.C. 122 and 37 CFR 1.14. This collection is estimated to take 1 hour to complete, including gathering, preparing and submitting the completed application form to the USPTO. Time will vary depending upon the individual case. Any comments on the amount of time you require to complete this form and/or suggestions for reducing this burden, should be sent to the Chief Information Officer, U.S. Patent and Trademark Office, U.S. Department of Commerce, P.O. Box 1450, Alexandria, VA 22313-1450. DO NOT SEND FEES OR COMPLETED FORMS TO THIS ADDRESS. **SEND TO: Commissioner for Patents, P.O. Box 1450, Alexandria, VA 22313-1450.**

ALL REFERENCES CONSIDERED EXCEPT WHERE LINED THROUGH. /M.A.A/

Privacy Act Statement

The Privacy Act of 1974 (P.L. 93-579) requires that you be given certain information in connection with your submission of the attached form related to a patent application or patent. Accordingly, pursuant to the requirements of the Act, please be advised that: (1) the general authority for the collection of this information is 35 U.S.C. 2(b)(2); (2) furnishing of the information solicited is voluntary; and (3) the principal purpose for which the information is used by the U.S. Patent and Trademark Office is to process and/or examine your submission related to a patent application or patent. If you do not furnish the requested information, the U.S. Patent and Trademark Office may not be able to process and/or examine your submission, which may result in termination of proceedings or abandonment of the application or expiration of the patent.

The information provided by you in this form will be subject to the following routine uses:

1. The information on this form will be treated confidentially to the extent allowed under the Freedom of Information Act (5 U.S.C. 552) and the Privacy Act (5 U.S.C. 552a). Records from this system of records may be disclosed to the Department of Justice to determine whether the Freedom of Information Act requires disclosure of these record s.

2. A record from this system of records may be disclosed, as a routine use, in the course of presenting evidence to a court, magistrate, or administrative tribunal, including disclosures to opposing counsel in the course of settlement negotiations.

3. A record in this system of records may be disclosed, as a routine use, to a Member of Congress submitting a request involving an individual, to whom the record pertains, when the individual has requested assistance from the Member with respect to the subject matter of the record.

4. A record in this system of records may be disclosed, as a routine use, to a contractor of the Agency having need for the information in order to perform a contract. Recipients of information shall be required to comply with the requirements of the Privacy Act of 1974, as amended, pursuant to 5 U.S.C. 552a(m).

5. A record related to an International Application filed under the Patent Cooperation Treaty in this system of records may be disclosed, as a routine use, to the International Bureau of the World Intellectual Property Organization, pursuant to the Patent Cooperation Treaty.

6. A record in this system of records may be disclosed, as a routine use, to another federal agency for purposes of National Security review (35 U.S.C. 181) and for review pursuant to the Atomic Energy Act (42 U.S.C. 218(c)).

7. A record from this system of records may be disclosed, as a routine use, to the Administrator, General Services, or his/her designee, during an inspection of records conducted by GSA as part of that agency's responsibility to recommend improvements in records management practices and programs, under authority of 44 U.S.C. 2904 and 2906. Such disclosure shall be made in accordance with the GSA regulations governing inspection of records for this purpose, and any other relevant (i.e., GSA or Commerce) directive. Such disclosure shall not be used to make determinations about individuals.

8. A record from this system of records may be disclosed, as a routine use, to the public after either publication of the application pursuant to 35 U.S.C. 122(b) or issuance of a patent pursuant to 35 U.S.C. 151. Further, a record may be disclosed, subject to the limitations of 37 CFR 1.14, as a routine use, to the public if the record was filed in an application which became abandoned or in which the proceedings were terminated and which application is referenced by either a published application, an application open to public inspections or an issued patent.

9. A record from this system of records may be disclosed, as a routine use, to a Federal, State, or local law enforcement agency, if the USPTO becomes aware of a violation or potential violation of law or regulation.

EFS Web 2.1.18

ALL REFERENCES CONSIDERED EXCEPT WHERE LINED THROUGH. /M.A.A/

Substitute for Form 1449/PTO

INFORMATION DISCLOSURE STATEMENT BY APPLICANT

(use as many sheets as necessary)

Sheet	1	**of**	1		

Complete if Known	
Application Number	14/228,057
Filing Date	March 27, 2014
First Named Inventor:	Thien Nguyen
Art Unit	3772
Examiner Name	Mirayda A. Aponte
Attorney Docket Number	INCEP-001COD

U.S. PATENT DOCUMENTS

Examiner Initials*	Cite No.'	Document Number Number-Kind Code[2](If known)		Publication Date MM-DD-YYYY	Name of Patentee or Applicant of Cited Document	Pages, Columns, Lines, Where Relevant Passages or Relevant Figures Appear
		US-	D962,438	8/30/2022	Nguyen	
		US-	D962,439	8/30/2022	Nguyen	
		US-				
		US-				
		US-				
		US-				
		US-				
		US-				
		US-				
		US-				
		US-				
		US-				
		US-				
		US-				
		US-				

FOREIGN PATENT DOCUMENTS

Examiner Initials*	Cite No.'	Foreign Patent Document Country Code[3] Number[4] Kind Codes (if known)	Publication Date MM-DD-YYYY	Name of Patentee or Applicant of Cited Document	Pages, Columns, Lines, Where Relevant Passages or Relevant Figures Appear	T6

Examiner Signature		Date Considered	

*EXAMINER: Initial if reference considered, whether or not citation is in conformance with MPEP 609; Draw line through citation if not in conformance and not considered. Include copy of this form with next communication to applicant. 'Applicant's unique citation designation number (optional). [2]See Kinds Codes of USPTO Patent Documents at www.uspto.gov or MPEP 901.04. [3]Enter Office that issued the document, by the two-letter code (WIPO Standard ST.3). [4]For Japanese patent documents, the indication of the year of reign of the Emperor must precede the serial number of the patent document. [5]Kind of document by the appropriate symbols as indicated on the document under WIPO Standard ST. 16 if possible. [6]Applicant is to place a check mark here if English language translation is attached.

This collection of information is required by 37 CFR 1.97 and 1.98. The information is required to obtain or retain a benefit by the public which is to file (and by the USPTO to process) an application. Confidentiality is governed by 35 U.S.C. 122 and 37 CFR 1.14. This collection is estimated to take 2 hours to complete including gathering, preparing, and submitting the completed application form to the USPTO. Time will vary depending upon the individual case. Any comments on the amount of time you require to complete this form and/or suggestions for reducing this burden, should be sent to the Chief Information Officer, U.S. Patent and Trademark Office, P.O. Box 1450, Alexandria, VA 22313-1450. DO NOT SENT FEES OR COMPLETED FORMS TO THIS ADDRESS. **SEND TO: Commissioner for Patents, P.O. Box 1450, Alexandria, Virginia 22313-1450.**

If you need assistance in completing the form, call 1-800-PTO-9199 (1-800-786-9199) and select option 2.

Based on Form PTO/SB/08A (08-03)

Electronic Acknowledgement Receipt

EFS ID:	46844166
Application Number:	14228057
International Application Number:	
Confirmation Number:	1983
Title of Invention:	INTRAORAL DEVICE WITH SLIT
First Named Inventor/Applicant Name:	Thien Nguyen
Customer Number:	138718
Filer:	Ruby Lim Chung/Lea Fong
Filer Authorized By:	Ruby Lim Chung
Attorney Docket Number:	INCEP-001COD
Receipt Date:	19-OCT-2022
Filing Date:	27-MAR-2014
Time Stamp:	20:22:53
Application Type:	Utility under 35 USC 111(a)

Payment information:

Submitted with Payment	no

File Listing:

Document Number	Document Description	File Name	File Size(Bytes)/ Message Digest	Multi Part /.zip	Pages (if appl.)
1	Transmittal Letter	INCEP-001COD_IDS_Statement_10-19-22.pdf	97270 7274919b0eb903e1699d77c8a79e79a2102a1ede	no	2

Warnings:

Information:					
2	Information Disclosure Statement (IDS) Form (SB08)	INCEP-001COD_IDS_1449_10-19-22.pdf	177578 27f57fadc214e5475252589 8e36579891fbc871d	no	1
Warnings:					
Information:					
This is not an USPTO supplied IDS fillable form					
			Total Files Size (in bytes):	274848	

This Acknowledgement Receipt evidences receipt on the noted date by the USPTO of the indicated documents, characterized by the applicant, and including page counts, where applicable. It serves as evidence of receipt similar to a Post Card, as described in MPEP 503.

New Applications Under 35 U.S.C. 111

If a new application is being filed and the application includes the necessary components for a filing date (see 37 CFR 1.53(b)-(d) and MPEP 506), a Filing Receipt (37 CFR 1.54) will be issued in due course and the date shown on this Acknowledgement Receipt will establish the filing date of the application.

National Stage of an International Application under 35 U.S.C. 371

If a timely submission to enter the national stage of an international application is compliant with the conditions of 35 U.S.C. 371 and other applicable requirements a Form PCT/DO/EO/903 indicating acceptance of the application as a national stage submission under 35 U.S.C. 371 will be issued in addition to the Filing Receipt, in due course.

New International Application Filed with the USPTO as a Receiving Office

If a new international application is being filed and the international application includes the necessary components for an international filing date (see PCT Article 11 and MPEP 1810), a Notification of the International Application Number and of the International Filing Date (Form PCT/RO/105) will be issued in due course, subject to prescriptions concerning national security, and the date shown on this Acknowledgement Receipt will establish the international filing date of the application.

IN THE UNITED STATES PATENT AND TRADEMARK OFFICE

Group Art Unit: 3772 | Examiner: Mirayda A. Aponte

Serial No.: 14/228,057 | Filed: March 27, 2014

In re Application of: Thien Nguyen

Confirmation No.: 1983 | Customer No.: 138718

Title: INTRAORAL DEVICE WITH SLIT

SUPPLEMENTAL INFORMATION DISCLOSURE STATEMENT
Under 37 C.F.R. § 1.56 and 1.97-1.98

Examiner:

Pursuant to the provisions of 37 C.F.R. §§ 1.56 and 1.97-98 of the Rules of Practice in Patent Cases, enclosed herewith is form PTO-SB-08, listing several references. The Examiner is requested to make these references of official record in the application.

The references cited may be material to examination of the application and are submitted in compliance with the Applicant's duty of disclosure as defined by 37 C.F.R. § 1.56.

Applicants hereby declare, pursuant to 37 C.F.R. §1.97(e)(2), that no item of information contained in the information disclosure statement was cited in a communication from a foreign patent office in a counterpart foreign application and, to the knowledge of the person signing the certification after having made a reasonable inquiry, no item of information contained in the information disclosure statement was

known to any individual designated in 37 C.F.R. §1.56(c) more than three months prior to the filing of the information disclosure statement.

No representation is made or intended as to the completeness of this list, nor is the inclusion of any reference an admission that it is prior art or pertinent to this application.

Respectfully submitted,
POLSINELLI LLP

Dated: October 19, 2022

By: _____/Ruby L. Chung/_____
Ruby L. Chung (Reg. No. 76,809)
Polsinelli LLP
Three Embarcadero Center, Suite 2400
San Francisco, CA 94111
415-248-2100 (Main)
patentdocketing@polsinelli.com

Substitute for Form 1449/PTO

INFORMATION DISCLOSURE STATEMENT BY APPLICANT

(use as many sheets as necessary)

Sheet	1	**of**	1		

Complete if Known	
Application Number	14/228,057
Filing Date	March 27, 2014
First Named Inventor:	Thien Nguyen
Art Unit	3772
Examiner Name	Mirayda A. Aponte
Attorney Docket Number	INCEP-001COD

U.S. PATENT DOCUMENTS

Examiner Initials*	Cite No.'	Document Number Number-Kind Code[2](If known)		Publication Date MM-DD-YYYY	Name of Patentee or Applicant of Cited Document	Pages, Columns, Lines, Where Relevant Passages or Relevant Figures Appear
		US-				
		US-				
		US-				
		US-				
		US-				
		US-				
		US-				
		US-				
		US-				
		US-				
		US-				
		US-				
		US-				
		US-				

FOREIGN PATENT DOCUMENTS

Examiner Initials*	Cite No.'	Foreign Patent Document Country Code[3] Number[4] Kind Codes (if known)	Publication Date MM-DD-YYYY	Name of Patentee or Applicant of Cited Document	Pages, Columns, Lines, Where Relevant Passages or Relevant Figures Appear	T6
		JP 2022-533276	7/21/2022	Dryshield, LLC		

Examiner Signature		Date Considered	

*EXAMINER: Initial if reference considered, whether or not citation is in conformance with MPEP 609; Draw line through citation if not in conformance and not considered. Include copy of this form with next communication to applicant. 'Applicant's unique citation designation number (optional). [2]See Kinds Codes of USPTO Patent Documents at www.uspto.gov or MPEP 901.04. [3]Enter Office that issued the document, by the two-letter code (WIPO Standard ST.3). [4]For Japanese patent documents, the indication of the year of reign of the Emperor must precede the serial number of the patent document. [5]Kind of document by the appropriate symbols as indicated on the document under WIPO Standard ST. 16 if possible. [6]Applicant is to place a check mark here if English language translation is attached.

This collection of information is required by 37 CFR 1.97 and 1.98. The information is required to obtain or retain a benefit by the public which is to file (and by the USPTO to process) an application. Confidentiality is governed by 35 U.S.C. 122 and 37 CFR 1.14. This collection is estimated to take 2 hours to complete including gathering, preparing, and submitting the completed application form to the USPTO. Time will vary depending upon the individual case. Any comments on the amount of time you require to complete this form and/or suggestions for reducing this burden, should be sent to the Chief Information Officer, U.S. Patent and Trademark Office, P.O. Box 1450, Alexandria, VA 22313-1450. DO NOT SENT FEES OR COMPLETED FORMS TO THIS ADDRESS. **SEND TO: Commissioner for Patents, P.O. Box 1450, Alexandria, Virginia 22313-1450.**

If you need assistance in completing the form, call 1-800-PTO-9199 (1-800-786-9199) and select option 2.

Based on Form PTO/SB/08A (08-03)

Patent Translate
Powered by EPO and Google

Notice

This translation is machine-generated. It cannot be guaranteed that it is intelligible, accurate, complete, reliable or fit for specific purposes. Critical decisions, such as commercially relevant or financial decisions, should not be based on machine-translation output.

ABSTRACT JP2022533276A

[0001]

13 A curved dental mouthpiece includes a main body portion positioned at the center of the curve and having a first end and a second end, and a suction connector portion connected to the first end. and a corner hook connected to the second end. The main body portion has a front wall on the inside of the curve and a rear wall on the outside of the curve. The front and rear walls define an interior space. At least one connector connects the front wall to the back wall. At least one front intermediate wall extends from the front wall partially toward the rear wall. At least one rear intermediate wall extends from the rear wall partially toward the front wall. At least one front intermediate wall and at least one rear intermediate wall each have alternating peaks and valleys. [Selection drawing] Fig. 1

(19)日本国特許庁(JP)　(12)公表特許公報(A)　(11)特許出願公表番号
特表2022-533276
(P2022-533276A)
(43)公表日　令和4年7月21日(2022.7.21)

(51)Int.Cl.		F I		テーマコード（参考）
A61C 5/90	*(2017.01)*	A61C 5/90		4C052
A61C 17/08	*(2006.01)*	A61C 17/08		

審査請求 未請求　予備審査請求 未請求　（全 15 頁）

(21)出願番号　特願2022-514453(P2022-514453)
(86)(22)出願日　令和2年5月8日(2020.5.8)
(85)翻訳文提出日　令和3年12月21日(2021.12.21)
(86)国際出願番号　PCT/US2020/032228
(87)国際公開番号　WO2020/231864
(87)国際公開日　令和2年11月19日(2020.11.19)
(31)優先権主張番号　62/846,353
(32)優先日　令和1年5月10日(2019.5.10)
(33)優先権主張国・地域又は機関
米国(US)

(71)出願人　521492953
ドライシールド、エルエルシー
アメリカ合衆国、カリフォルニア州　９２７０８、ファウンテン　バレー、　スイート　ビー、グレース　アベニュー　１１２３０
(74)代理人　100105924
弁理士　森下　賢樹
(72)発明者　グエン、ティエン
アメリカ合衆国、カリフォルニア州　９２７０８、ファウンテン　バレー、　スイート　ビー、グレース　アベニュー　１１２３０

最終頁に続く

(54)【発明の名称】歯科用マウスピース

(57)【要約】
【解決手段】曲線で構成された歯科用マウスピースは、曲線の中心部に位置し、第１端部および第２端部を有するメインボディ部と、第１端部に接続された吸引コネクター部と、第２端部に接続された口角鉤部と、を備える。メインボディ部は、曲線の内側に前壁と、曲線の外側に後壁と、を備える。前壁および後壁は、内部空間を定義する。少なくとも１つのコネクターが、前壁を後壁に接続する。少なくとも１つの前側中間壁が、前壁から、部分的に後壁に向けて延びる。少なくとも１つの後側中間壁が、後壁から、部分的に前壁に向けて延びる。少なくとも１つの前側中間壁および少なくとも１つの後側中間壁は、それぞれ、交代する山および谷を有する。
【選択図】図１

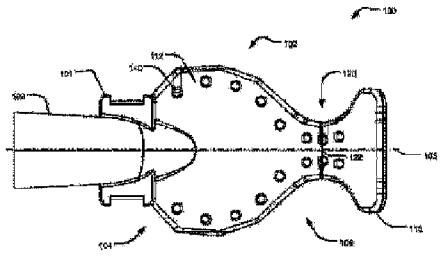

FIG. 1

【特許請求の範囲】
【請求項１】
曲線で構成された歯科用マウスピースであって、
前記曲線の中心部に位置し、第１端部および第２端部を有するメインボディ部と、
前記第１端部に接続された吸引コネクター部と、
前記第２端部に接続された口角鉤部と、
を備え、
前記メインボディ部は、前記曲線の内側に前壁と、前記曲線の外側に後壁と、を備え、
前記前壁および前記後壁は、内部空間を定義し、
少なくとも１つのコネクターが、前記前壁を前記後壁に接続し、
少なくとも１つの前側中間壁が、前記前壁から、部分的に前記後壁に向けて延び、
少なくとも１つの後側中間壁が、前記後壁から、部分的に前記前壁に向けて延び、
前記少なくとも１つの前側中間壁および前記少なくとも１つの後側中間壁は、それぞれ、交代する山および谷を有し、
前記吸引コネクター部は、前記内部空間を真空吸引源に接続することを特徴とする歯科用マウスピース。
【請求項２】
前記吸引コネクター部の少なくとも１つは、円柱状の柱であることを特徴とする請求項１に記載の歯科用マウスピース。
【請求項３】
前記吸引コネクター部の少なくとも１つは、前記内部空間内で、前記メインボディ部の縦方向に広がる壁であることを特徴とする請求項１に記載の歯科用マウスピース。
【請求項４】
前記内部空間内に、前記後壁から突出するブリッジ構造をさらに備え、
この突出は、間隔を空けた山を備えた胸壁状であることを特徴とする請求項１に記載の歯科用マウスピース。
【請求項５】
前記吸引コネクター部の近くの突出は、より高い高さと、より長い長さとを持つことを特徴とする請求項４に記載の歯科用マウスピース。
【請求項６】
前記山の間の空間は、胸壁状の谷であることを特徴とする請求項４に記載の歯科用マウスピース。
【請求項７】
前記前側中間壁および前記後側中間壁の上で交代する山および谷は、半円状であることを特徴とする請求項１に記載の歯科用マウスピース。
【請求項８】
前記前側中間壁および前記後側中間壁は、前記メインボディ部の一体性を維持するために、高さが変化することを特徴とする請求項１に記載の歯科用マウスピース。
【請求項９】
前記前側中間壁および前記後側中間壁の谷の大きさは、当該谷が前記口角鉤部に近づくに従って、小さくなることを特徴とする請求項１に記載の歯科用マウスピース。
【請求項１０】
前記前側中間壁および前記後側中間壁は、前記吸引コネクター部が前記メインボディ部と接触する場所で接触することを特徴とする請求項１に記載の歯科用マウスピース。
【請求項１１】
前記前側中間壁および前記後側中間壁は、前記メインボディ部が前記口角鉤部と接触する場所で接触することを特徴とする請求項１に記載の歯科用マウスピース。
【請求項１２】
前記吸引コネクター部と一体化された咬合阻止器をさらに備え、
前記咬合阻止器は、患者の咬合中、さらなる圧縮抵抗および減少した圧縮性を与えるこ

とを特徴とする請求項１に記載の歯科用マウスピース。
【請求項１３】
前記メインボディ部、前記吸引コネクター部および前記口角鉤部は、単一の部品として射出成形により形成されることを特徴とする請求項１に記載の歯科用マウスピース。
【請求項１４】
前記メインボディ部、前記吸引コネクター部および前記口角鉤部を形成する材料は、柔軟で、半透明で、高耐熱で、オートクレーブ可能な、シリコーンベースの材料であることを特徴とする請求項１に記載の歯科用マウスピース。
【請求項１５】
前記後壁は、前記後壁の内側表面から、前記メインボディ部の縦軸に沿って突出する安定バーをさらに含むことを特徴とする請求項１に記載の歯科用マウスピース。
【請求項１６】
前記コネクターの少なくとも１つは、前記安定バーに沿って、等間隔に配置されることを特徴とする請求項１５に記載の歯科用マウスピース。
【請求項１７】
前記吸引コネクター部は、真空アダプタの連結用突起に対応する切り抜きを備えることを特徴とする請求項１に記載の歯科用マウスピース。
【請求項１８】
前記吸引コネクター部は真空源に接続し、
前記真空源の起動により、前記メインボディ部の内部空間からの流体の吸引が行われることを特徴とする請求項１に記載の歯科用マウスピース。
【請求項１９】
前記真空源の起動は、流体を、前記メインボディ部の外側から、前記前側中間壁および前記後側中間壁の山および谷を通して、前記メインボディ部の内部空間内に引き込むことを特徴とする請求項１８に記載の歯科用マウスピース。
【請求項２０】
前記口角鉤部は、前記口角鉤部の弾性に基づいて圧力を与える面を含むことを特徴とする請求項１に記載の歯科用マウスピース。
【発明の詳細な説明】
【技術分野】
【０００１】
［関連出願への相互参照］
本出願は、２０１９年５月１０日出願の米国仮特許出願第６２／８４６，３５３号「歯科用マウスピース」に基づく優先権を主張する。当該仮特許出願の開示内容は、参照として本明細書に組み込まれる。
【０００２】
本発明は、一般に歯科用マウスピースの分野に関する。より具体的には、本発明は、口腔内歯科用吸引器および分離型マウスピースに関する。
【背景技術】
【０００３】
現在歯科の分野では、歯科専門医、歯科衛生士、歯科助手などが様々なマウスピースを使用する。かつては歯科患者は、歯科専門医および歯科助手を含む従来型の２名のチームから治療を受けていた。さらに歯科治療には、多くの異なる歯科機器および材料が使われていた。こうした歯科機器および材料は、口腔内鏡、咬合阻止器、低速吸引エジェクター、高速吸引エジェクター、ガーゼ、コットンロール、ドライアングルなどを含む。こうした歯科機器のそれぞれは、異なる目的ごとに使われてもよく、歯科処置の目的に応じて組み合わされてもよい。このように歯科処置を行う歯科専門医は、これら複数の歯科機器を使う必要があるだろう。従って歯科助手の重要な役割は、複数の異なる歯科機器および材料の使用に合わせて、歯科専門医を補助することにある。
【発明の概要】

【発明が解決しようとする課題】
【０００４】
従ってこの分野では、より効率的で、快適で、安全な歯科処置サービスの提供を可能とするシステムおよび方法が必要とされる。
【課題を解決するための手段】
【０００５】
曲線で構成された歯科用マウスピースの実施の形態が開示される。このような歯科用マウスピースは、曲線の中心部に位置し、第１端部および第２端部を有するメインボディ部と、第１端部に接続された吸引コネクター部と、第２端部に接続された口角鉤部と、を備えてもよい。
【０００６】
ある実施の形態では、メインボディ部、吸引コネクター部および口角鉤部は、射出成形により、一体成形されてもよい。ある実施の形態では、マウスピースは、柔軟で、半透明で、射出成形に有利な、高耐熱で、オートクレーブ可能な材料で作られてもよい。このような材料は、シリコーンを含んでもよい。こうしたマウスピースは、高耐熱で、オートクレーブ可能な材料で作られるので、再生可能である。
【０００７】
メインボディ部は、曲線の内側に前壁と、曲線の外側に後壁と、を備える。前壁および後壁は、内部空間を定義する。少なくとも１つのコネクターが、内部空間内で前壁を後壁に接続する。少なくとも１つの前側中間壁が、前壁から、部分的に後壁に向けて延び、少なくとも１つの後側中間壁が、後壁から、部分的に前壁に向けて延びる。少なくとも１つの前側中間壁および少なくとも１つの後側中間壁は、それぞれ、交代する山および谷を有する。
【図面の簡単な説明】
【０００８】
【図１】歯科用マウスピースの上面図である。
【０００９】
【図２】図１の歯科用マウスピースの等角図である。
【００１０】
【図３】図１の歯科用マウスピースの後面図である。
【００１１】
【図４】図１の歯科用マウスピースの底面図である。
【００１２】
【図５】図１の歯科用マウスピースの頂部環状断面図である。
【００１３】
【図６】図１の歯科用マウスピースの側面図である。
【００１４】
【図７】後壁から引き離された前壁を備える図1の歯科用マウスピースの側面図である。
【００１５】
【図８】吸引コネクターとメインボディとが交差するところでの、図１の歯科用マウスピースの横断面図である。
【００１６】
【図９】吸引コネクターとメインボディとが交差するところでの、図１の歯科用マウスピースの横断面図である。
【００１７】
【図１０】壁状コネクターを備える図１の歯科用マウスピースの縦断面図である。
【００１８】
【図１１】柱状コネクターを備える図１の歯科用マウスピースの縦断面図である。
【発明を実施するための形態】
【００１９】

本発明の実施の形態は、高吸引歯科用アダプタに取り付け可能なマウスピースであって、椅子の横での単独のハンズフリー吸引を実現することにより歯科スタッフを援助するものを含んでもよい。このようなマウスピースは、メインボディ部と、口角鉤部と、吸引コネクター部と、安定バーと、咬合阻止器と、を備える。いくつかの実施の形態では、メインボディ部、口角鉤部、吸引コネクター部、安定バーおよび咬合阻止器（およびそれらの一部）が、好ましくは射出成形により、一体成形されてもよい。ある典型的な実施の形態では、マウスピースは、柔軟で、弾力があり、少なくとも半透明で、射出成形に有利な材料で作られる。このような材料は、既知の熱可塑性エラストマーを含んでもよい。

【００２０】

図１は、歯科用マウスピースの上面図である。歯科用マウスピース１００は、第１端部１０４、および第１端部１０４の反対側に第２端部１０６を持つメインボディ部１０２を含む。図示された実施の形態では、吸引コネクター部１０８が第１端部１０４に結合されており、口角鉤部１１０が第２端部１０６に結合されている。しかし別の実施の形態では、マウスピース１００は、吸引コネクター部１０８および／または口角鉤部１１０を持たなくてもよい。さらに咬合阻止器１０１が、メインボディ部１０２の第１端部１０４の近くで吸引コネクター部１０８に一体化されている。しかし咬合阻止器１０１は、吸引コネクター部１０８のどこに配置されてもよい。

【００２１】

メインボディ部１０２は、第２端部１０６から口角鉤部１１０に延びる頸部１２０を含んでもよい。頸部１２０は、メインボディ部１０２の幅、口角鉤部１１０の幅および吸引コネクター部１０８の幅より狭い幅１２２を持ってもよい。しかし別の例では、幅１２２は、メインボディ部１０２の幅、口角鉤部１１０の幅および吸引コネクター部１０８の幅より広くてもよい。

【００２２】

図示された実施の形態では、吸引コネクター部１０８、口角鉤部１１０、咬合阻止器１０１およびメインボディ部１０２は、１つの部品で構成されてもよい。しかし他の例では、吸引コネクター部１０８、口角鉤部１１０、咬合阻止器１０１および／またはメインボディ部１０２の各々は、別個の部品で構成されてもよい。例えばいくつかの実施の形態では、メインボディ部１０２、口角鉤部１１０および吸引コネクター部１０８（およびそれらの一部）が、好ましくは射出成形により、一体成形されている。咬合阻止器１０１は、別個の部品で構成され、吸引コネクター部１０８に取り付け可能であってもよい。ある典型的な実施の形態では、マウスピース１００は、柔軟で、弾力があり、少なくとも半透明で、射出成形に有利な材料で作られてもよい。このような材料は、熱可塑性エラストマーを含んでもよい。

【００２３】

図２は、図１の歯科用マウスピースの等角図である。図２に示されるように、メインボディ部１０２は、曲線形状をしてもよい。マウスピース１００は柔軟で弾力のある材料（例えば、熱可塑性エラストマー）で作られるので、患者の口内に置かれると、患者の口の形に一致するような曲線となることができる。吸引コネクター部１０８は、適切に配置されたとき、患者の口の片側から突出してもよい。一方このとき、メインボディ部１０２は、患者の口の後部にもたれて置かれ、口角鉤部１１０は、患者の口と反対側の頬を圧迫する。

【００２４】

口角鉤部１１０は、患者の頬を圧迫し、吸引コネクター部１０８が延びる方と反対側で、患者の頬を患者の歯から引っ込ませるように構成されてもよい。マウスピース１００を形成する材料が柔軟であるため、マウスピース１００は、患者の口内に置かれるとある程度曲がる。しかしこの材料の持つ弾力性により、マウスピース１００は、曲げから開放されると、患者の口の一部に圧力を加えることができる。例えばマウスピース１００の材料は、口角鉤部１１０が、患者の頬を歯から遠ざけるのに十分な圧力で患者の頬を圧迫する程度の弾力性を持つ。口角鉤部１１０は、メインボディ部１０２に取り付けられるハンマ

ーヘッド状の遠位領域を持つものとして図示されている。口角鉤部１１０は、ある例では中身の詰まったものであってもよく、別の例では空洞のあるものであってもよい。

【００２５】

メインボディ部１０２は、曲線の内側部分に前壁１１２を備え、曲線の外側部分に後壁１１４（図４にも示される）を備えてもよい。前壁１１２は、患者の口の前方に対向してもよい。後壁１１４は、患者の口の後方に対向してもよい。メインボディ部１０２の前壁１１２および後壁１１４は、互いに平行であるように構成されてもよい。前壁１１２は、後壁１１４の所定形状に対応する所定形状をしてもよい。しかし別の例では、前壁１１２は、後壁１１４と異なる形状をしてもよい。所定形状は、第１端部１０４においてはより幅が広く、第２端部１０６においてはより幅が狭いものであってもよい。いくつかの実施の形態では、所定形状は盾状に相当するものであってもよい。しかし所定形状は、例えば、正方形状、直線矢印状、長方形状、星状、楕円状、円状、その他の患者の口腔形状に一般に合致するものであってもよい。大人と子供の口のサイズが異なることに対応して、異なるサイズのマウスピースが与えられてもよい。第１端部１０４の部分は、メインボディ部１０２のその他の部分より厚い壁で形成されてもよい。このような厚さを与えることにより、第１端部１０４においてさらなる安定性を得ることができる。前壁１１２および後壁１１４は、患者の口内に置かれると、患者の気道を封鎖することができる。このとき、咬合阻止器１０１は、患者の歯と歯の間に置かれる。吸引コネクター部１０８は、患者の口の一方の側から延びる。口角鉤部１１０は、患者の口内の他方側の頬を圧迫する。

【００２６】

メインボディ部１０２は、前壁１１２の上および／または後壁１１４の上に位置づけられた開口１４０を含んでもよい。このような開口１４０（例えば、穿孔、スリット、アパーチャ等）により、当該開口１４０を通して空気、液体および小さなゴミ等を、患者の口から内部空間１２６内に吸引し、吸引コネクター部１０８を通して吸引源に送ることができる。開口１４０は、前壁１１２および／または後壁１１４の周辺に配置されてもよい。いくつかの例では、開口１４０は、前壁１１２および／または後壁１１４の頸部１２０のいずれかの側に配置されてもよい。別の例では、開口１４０は複数のアパーチャである。このとき、すべてのアパーチャが同じサイズであってもよいし、アパーチャの一部または全部が異なるサイズであってもよい。

【００２７】

図３は、図１の歯科用マウスピースの後面図である。図３に示されるように、吸引コネクター部１０８は、楕円状であってもよく、メインボディ部１０２に取り付けられてもよい。吸引コネクター部１０８は、メインボディ部１０２より厚い壁で形成されてもよく、高吸引真空アダプタに取り付けられるように構成されてもよい。吸引コネクター部１０８は、水、唾液およびゴミ等を、内部空間１２６から除去用外部アダプタへ送ることを補助してもよい。吸引コネクター部１０８は、スライド中のマウスピースを、所望の深さのアダプタ位置で停止させるための内部ストッパを含んでもよい。

【００２８】

以下、図３に示されるように、患者の口内に置かれたとき口内の上顎にもたれる側を意味するものとして、上壁１１６という用語が使われてもよい。同様に、以下、患者の口内に置かれたときに、口内の底にもたれる側を意味するものとして、下壁１１８という用語が使われてもよい。上壁１１６および下壁１１８は、同一に形成されてもよい。この場合、マウスピースの向きを変えることができる。このとき、新しい向きにでは、上壁１１６は、下壁１１８のように見える（逆もまた同様である）。使用中、メインボディ部１０２の上壁１１６および下壁１１８は、口内の頂部、ならびに、口内の底部および／または舌を保護し分離するものとして機能してもよい。さらにメインボディ部１０２は、口内の後部（例えば、喉や気道）を、落下するゴミからを保護し分離するものとして機能してもよい。

【００２９】

図４は、図１の歯科用マウスピースの底面図である。前壁１１２および後壁１１４は、

少なくとも１つのコネクター１２４を用いて、互いに接続されてもよい。いくつかの実施の形態では、吸引コネクター部１０８は、切り抜き１４２（例えば、ロゴ、長方形の切り目、正方形の切り目、円形の切り目、その他の任意の形の切り目といった形状）を有してもよい。これにより、外部の高吸引真空アダプタ上の対応する突起（これもまた、例えば、ロゴ、長方形の切り目、正方形の切り目、円形の切り目、その他の任意の形の切り目といった形状であってよい）とのさらなる連結が可能となる。

【００３０】

咬合阻止器１０１は、咬合阻止器１０１内に空洞を形成するための咬合阻止開口１４１により補強されてもよい。これにより、咬合阻止は、一層安定的となる。ある実施の形態では、咬合阻止開口１４１は、咬合阻止器１０１の底部で開口する、２つの平行な長方形の開口であってもよい。咬合阻止開口１４１は、吸引コネクター部１０８に向けて延びているが、その延びは吸引コネクター部１０８の厚さを越えていなくてもよい。

【００３１】

図５は、図１の歯科用マウスピースの頂部環状断面図である。図５、７および８に示されるように、メインボディ部１０２は、後壁１１４の内側表面１３５から突出するブリッジ構造１３６を含んでもよい。いくつかの実施の形態では、ブリッジ構造１３６は、ロゴの形状（例えば、矢じり状または盾状）を持つ。ブリッジ構造は、矢じりの先端にギャップを有してもよい。これにより矢じりは、頂点ではなく、開いた弧を有する。いくつかの実施の形態では、ブリッジ構造１３６は、マウスピース１００のメインボディ部１０２の中心部に配置されてもよい。いくつかの例では、こうしたブリッジ構造１３６は、ブリッジ山１３７およびブリッジ谷１３８を持つ波の形で、内側表面１３５から突出してもよい。別の実施の形態では、ブリッジ構造１３６は、胸壁または台形の形で突出してもよい。ブリッジ山１３７により、複数の接触点（これは、一般に後壁１１４から分離されている）が与えられる。図７および８に示されるように、吸引コネクター部１０８の開口１４６の近くにあるブリッジ山１３７の高さは、開口１４６の遠くにあるブリッジ山１３７の高さより高くてもよい。図８に示されるように、吸引コネクター部１０８の開口１４６の近くにあるブリッジ山１３７の長さは、開口１４６の遠くにあるブリッジ山１３７の長さより長くてもよい。ブリッジ谷１３８は、内側表面１３５と実質的に同じ高さか、または内側表面１３５の上方に延びていてもよい。吸引中、前壁１１２を後壁１１４から分離しておくために、ブリッジ谷１３８は前壁１１２と接触する。これにより、前壁１１２または後壁１１４が内部空間１２６内に落ち込むことが防止される。従って、ゴミおよび／または水は、内部空間１２６を通って廃棄される。一方、ブリッジ谷１３８により、ギャップが与えられる。これにより、ブリッジ構造１３６を通して、空気、流体および小さなゴミ等を吸引することができる。別の例では、ブリッジ構造１３６は滑らかであってもよい。あるいはブリッジ構造１３６は、鋭利な山および鋭利な谷、円状の山および円状の谷、正方形の山および正方形の谷、またはこれらの形状を組み合わせた形状の山および谷を含んでもよい。

【００３２】

図５および７に示されるように、メインボディ部１０２は、メインボディ部１０２のほぼ中央部から口角鉤部１１０に向けて延びる安定バー１４３をさらに含んでもよい。このような安定バー１４３は、後壁１１４の内側表面１３５から縦軸１０３に沿って突出してもよい。ある実施の形態では、安定バー１４３は、ブリッジ構造１３６の開いた弧から開始し、縦軸１０３に沿って頸部１２０の第２端部１０６に向けて続き、口角鉤部１１０に到達する前に終了する。安定バー１４３は、後壁１１４の内側表面１３５から、前壁１１２の内側表面１１３に向けて突出してもよい。安定バー１４３は、内部空間１２６の高さ以下の任意の高さであってもよい。ある実施の形態では、安定バー１４３の特定の箇所に、前壁１１２を後壁１１４に取り付けるためのコネクター１２４が取り付けられてもよい。安定バー１４３の上のコネクター１２４は、吸引中に、マウスピース１００の引っ込み、安定、支持および曲げを補助してもよい。ある典型的な実施の形態では、安定バー１４３に位置調整された複数のコネクター１２４が与えられてもよい。しかし別の例では、安

定バー１４３は、少なくとも１つのコネクター１２４に位置調整されなくてもよい。

【００３３】

図６は、図１の歯科用マウスピースの側面図である。図６は、患者の口の底にもたれる下側を示す。前壁１１２および後壁１１４は、互いに間隔を空けて配置され、内部空間１２６を定義する。コネクター１２４、安定バー１４３およびブリッジ構造１３６のうちの少なくとも１つ以外、一般に内部空間１２６は開いており非閉塞である。これにより、吸引は内部空間１２６を通って流れることができる。前壁１１２と後壁１１４との間の内部空間１２６は、一般に、前壁１１２および後壁１１４と同じ所定形状を持つ。ある例では、内部空間１２６は、頸部１２０を通って延びる。しかし別の例では、内部空間１２６は、頸部１２０を通って延びない。さらに別の例では、内部空間１２６は、頸部１２０を通って、口角鉤部１１０まで延びる。

【００３４】

少なくとも１つの前側中間壁１２７が、前壁１１２の少なくとも１つの端部１２８から、部分的に後壁１１４に向けて延びていてもよい。前側中間壁１２７は、少なくとも１つの端部１２８から、前壁１１２と後壁１１４との間の中点に延びる厚さを持っていてもよい。従って、このような前側中間壁１２７の全長は、前壁１１２と後壁１１４との間隔全体の長さを越えなくてもよい。このような前側中間壁１２７の厚さは、口角鉤部１１０から、頸部１２０を通って、第１端部１０４まで漸次増加していてもよい。このような厚さの増加によって、第１端部１０４における剛性が強化されてもよい。いくつかの実施の形態では、このような前側中間壁１２７は、さらにうねを立てられてもよい。別の実施の形態では、このような前側中間壁１２７は、滑らかな端部を持ってもよい。いくつかの例では、前側中間壁１２７は、交代する山１３０および谷１３２を含む。図示された実施の形態では、山１３０は平坦な面であり、谷１３２は円柱状の切り取り面である。しかし、山１３０および谷１３２は、任意の形状であってもよい。いくつかの例では、山１３０および谷１３２は、前側中間壁１２７の深さ全体にわたって延びる。しかし別の例では、山１３０および／または谷１３２は、前側中間壁１２７の一部に沿って延びてもよい。山１３０および谷１３２は、マウスピース１００に、さらなる引っ込み、安定、支持および曲げを与えてもよい。

【００３５】

後壁１１４は、少なくとも１つの対応する中間壁１３４（これは、後壁１１４の少なくとも１つの端部１３３から延び、前壁１１２に向けて部分的に延びる）を有してもよい。後側中間壁１３４は、前側中間壁１２７と同じ強さのうねを持つ鏡像であってもよいし、前側中間壁１２７と異なるものであってもよい。図６に示されるように、ある例では、前側中間壁１２７のうねは、後側中間壁１３４のうねと位置調整されてもよい。組み合わせを考えると、前側中間壁１２７、後側中間壁１３４およびそれぞれの位置調整されたうねは、前壁１１２と後壁１１４との間に、開いた網目を形成してもよい。このような開いた網目は、第１端部１０４から第２端部１０６までの間、前壁１１２および後壁１１４の各々の端部１２８、１３３に続いてもよい。前側中間壁１２７と後側中間壁１３４との間の開いた網目を設けることにより、空気、流体および小さなゴミ等を、患者の口から、この網目を通って、内部空間１２６に吸引し、さらに吸引源に向けて吸引コネクター部１０８に送ることができる。

【００３６】

前側中間壁１２７は、第１端部１０４におけるメインボディの吸引コネクター部１０８の近くで、上壁１１６および下壁１１８で、後側中間壁１３４に接続されてもよい。あるいは前側中間壁１２７は、第２端部１０６における口角鉤部１１０の近くで、上壁１１６および下壁１１８で、後側中間壁１３４に接続されてもよい。いくつかの実施の形態では、前側中間壁１２７は、口角鉤部１１０で、後側中間壁１３４に接続されてもよい。

【００３７】

図７は、後壁から引き離された前壁を備える図1の歯科用マウスピースの側面図である。少なくとも１つのコネクター１２４は、内部空間１２６内で、前壁１１２と後壁１１４

との間の距離全体にわたって広がっていてもよい。言い換えれば、コネクター１２４は、後壁１１４の内側表面１３５および前壁１１２の内側表面１１３に取り付けられてもよい。少なくとも１つのコネクター１２４は、マウスピース１００に構造的剛性を与えてもよく、ピラー、柱、壁等であってもよい。図示された例では、少なくとも１つのこのようなコネクター１２４は、３つのコネクターを含む。これら３つのコネクターの各々は、柱状であり、互いに直線的に分離される。

【００３８】

図８は、図１の歯科用マウスピースの横断面図である。吸引コネクター部１０８の開口１４６の近くにあるブリッジ山１３７の高さは、開口１４６の遠くにあるブリッジ山１３７の高さより高くてもよい。また、吸引コネクター部１０８の開口１４６の近くにあるブリッジ山１３７の長さは、開口１４６の遠くにあるブリッジ山１３７の長さより長くてもよい。

【００３９】

図９は、図１の歯科用マウスピースの横断面図である。図９は、吸引コネクターがメインボディに取り付けられるところでの歯科用マウスピースを示す。図９に示されるように、吸引コネクター部１０８は、楕円形をしていてよい。さらに吸引コネクター部１０８は、メインボディ部１０２がブリッジ構造１３６（ここでは、ブリッジ山１３７およびブリッジ谷１３８が、吸引コネクター部１０８の近くでのメインボディ部１０２の開口を部分的に遮断してもよい）に到達するまでシームレスに移動して、メインボディ部１０２に取り付けられてもよい。咬合阻止器１０１が、吸引コネクター部１０８の開口に干渉しないように、吸引コネクター部１０８の外側に取り付けられる。

【００４０】

（やはり図５に示されるように）吸引コネクター部１０８は、開口１４６を含んでもよい。開口１４６は、メインボディ部１０２の内部空間１２６内に向けて開口する。これにより、内部空間１２６と吸引コネクター部１０８とが流体連通する。吸引コネクター部１０８の開口の近くで、少なくとも１つの吸引コネクター壁１４４が、前壁１１２から後壁１１４に延びてもよい。これにより、吸引中に、前壁１１２または後壁１１４が落ち込むことが防止される。少なくとも１つの吸引コネクター壁１４４は、吸引コネクター部１０８の開口１４６のいずれかの側に配置された１対の壁を含む。

【００４１】

咬合阻止器１０１は、咬合阻止器１０１をより強く牽引し支持するために、咬合阻止器１０１のいずれかの側に、咬合阻止山１４７と、咬合阻止谷１４８と、を含んでもよい。ある実施の形態では、咬合阻止山１４７および咬合阻止谷１４８は、咬合阻止器１０１のいずれかの側で、ぎざぎざの形状または波の形状を取る。しかし、咬合阻止山１４７および咬合阻止谷１４８は、任意の形状を取ってもよい。

【００４２】

図１０は、壁状コネクターを備える図１の歯科用マウスピースの縦断面図である。この実施の形態では、コネクター１２４は、縦軸１０３で、強固な壁として、前壁１１２を後壁１１４に接続する。コネクター１２４は、口角鉤部１１０からいくらか離れたところにある第２端部１０６で頸部１２０から、縦軸１０３に沿って、第１端部１０４に向けて延びる。そしてコネクター１２４は、メインボディ部１０２の中点を取り巻くブリッジ構造１３６の開口部近くで終端する。別の実施の形態では、コネクター１２４は、縦軸１０３に沿って延び、メインボディ部１０２の内部空間１２６内の任意の場所で終端する。

【００４３】

図１１は、柱状コネクターを備える図１の歯科用マウスピースの縦断面図である。この実施の形態では、コネクター１２４は、安定バー１４３を有する、縦軸１０３で等間隔で隔てられた３つの円柱状の柱として、前壁１１２を後壁１１４に接続する。第１のコネクターは、メインボディ部１０２に配置される。第２のコネクターは、頸部１２０の近くに配置される。そして第３のコネクターは、口角鉤部１１０の近くに隔てられる。３つのコネクターが直線的に分離されることにより、頸部１２０を狭い幅１２２に保ったまま、頸

部１２０にさらなる剛性を持たせることができる。別の実施の形態では、このようなコネクター１２４は、設置されたマウスピース１００が口の一方から後方を通って他方まで巻き始める場所に配置されてもよい。これにより、マウスピース１００は、患者の口の一般的な口腔内形状に合致することができる。別の例では、少なくとも１つのコネクター１２４は、１つのコネクター、２つのコネクター、あるいは３つ以上のコネクターを含んでもよい。このとき、各コネクターは、マウスピース１００の任意の場所に配置されてもよい。ある例では、少なくとも１つのコネクター１２４は、メインボディ部１０２から、頸部１２０を通って、口角鉤部１１０まで延びるリブであってもよい。

【００４４】

ここで説明したマウスピースは、一体型のオートクレーブ可能な高吸引真空アダプタとともに使われてもよい。このような高吸引真空アダプタは、単一の均質な材料で作られてもよい。こうした真空アダプタは、シングルレバーのデザインを持ちながら、水、唾液およびゴミ等を口腔から吸引源に制御可能に除去できる、現行のすべての高吸引真空エバキュエーターおよび唾液エジェクターと同様に機能することができる。シングルレバーは、少なくとも部分的に囲い込まれたメインボディから、吸引コネクター内の単一かつ大型の除去導管を通して、水、唾液およびゴミ等を制御可能に除去するようにデザインされてよい。

【００４５】

以上、様々な実施の形態を説明したが、これらは限定でなく例示を目的とすることに留意されたい。本明細書の説明は、本発明の範囲を特定の実施の形態に限定しない。従って、好ましい実施の形態の範囲およびスコープは、前述の典型的な実施の形態に限定されない。本明細書の説明は、模式的であり限定的ではないことに留意されたい。一方、本開示は、添付の請求項で定義されるものの他、当業者に理解可能な本発明の範囲に含まれるすべての変形、改良、均等物をカバーする。従って、本発明の範囲は、本明細書の説明によってではなく、すべての均等の範囲を含む請求項によって決定されなければならない。

【図１】

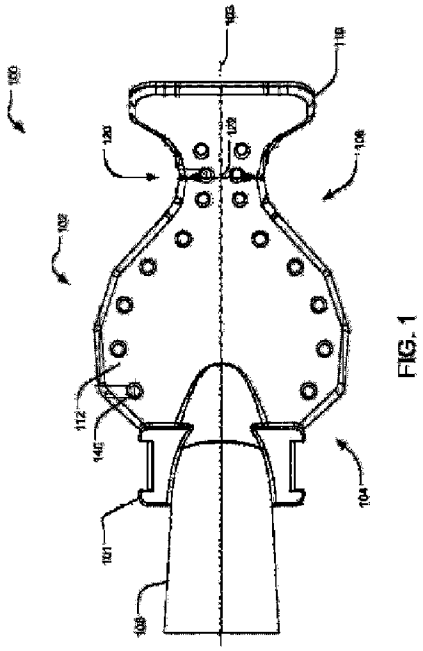

FIG. 1

【図２】

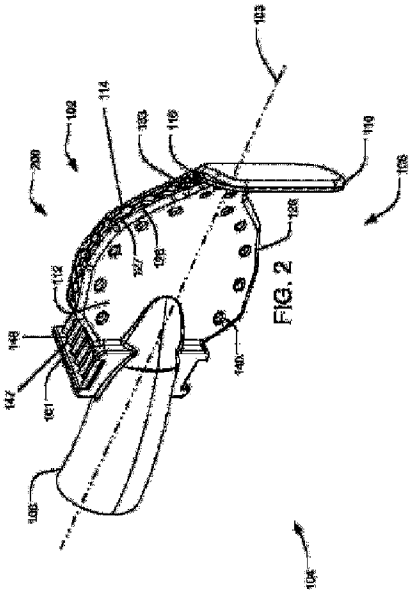

FIG. 2

【図３】

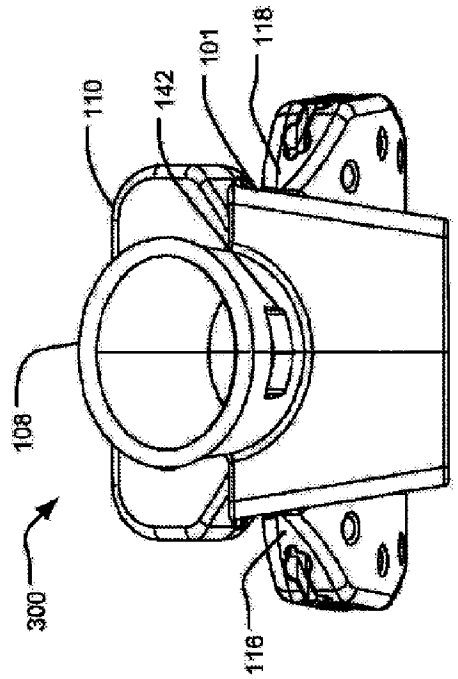

FIG. 3

【図４】

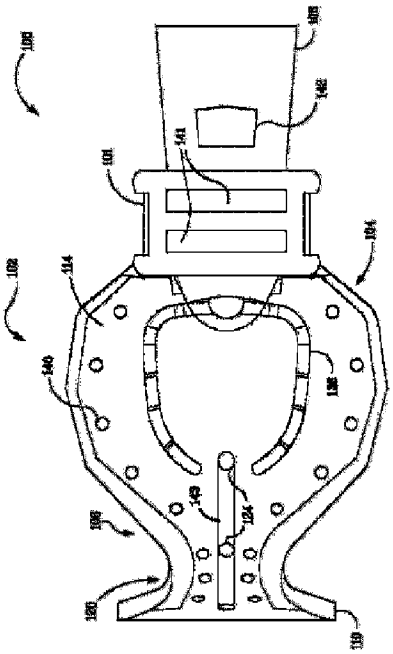

FIG. 4

【図５】

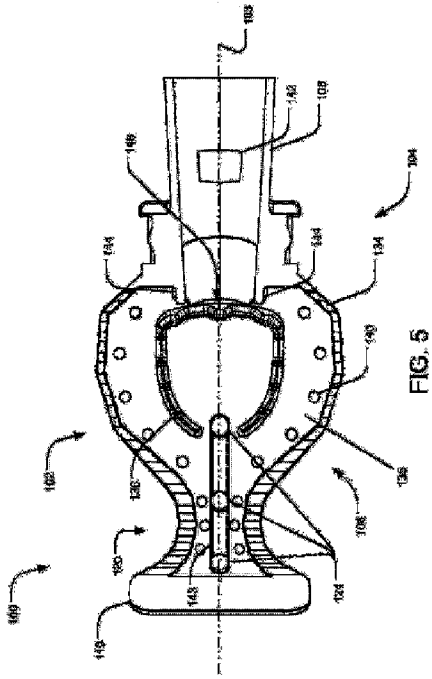

FIG. 5

【図６】

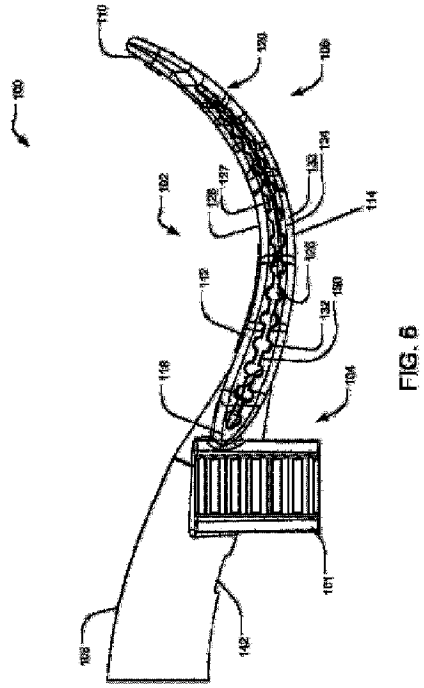

FIG. 6

【図７】

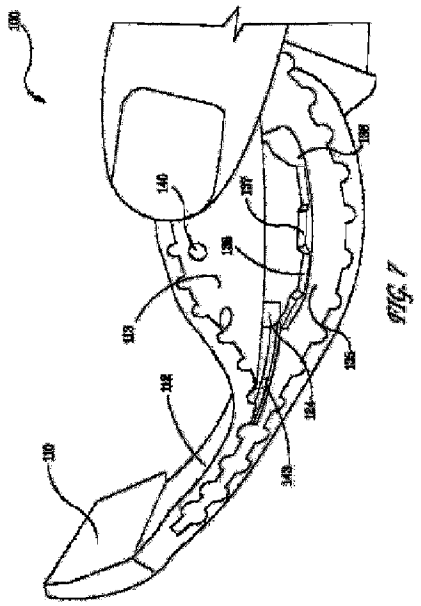

FIG. 7

【図８】

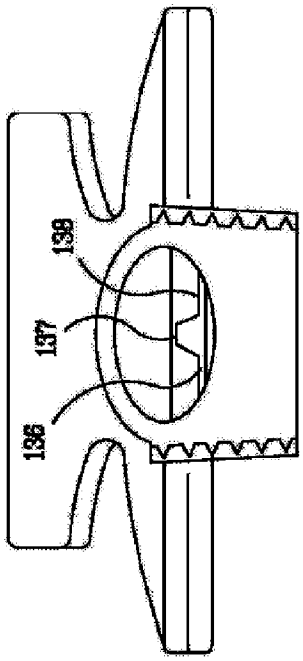

FIG. 8

【図９】

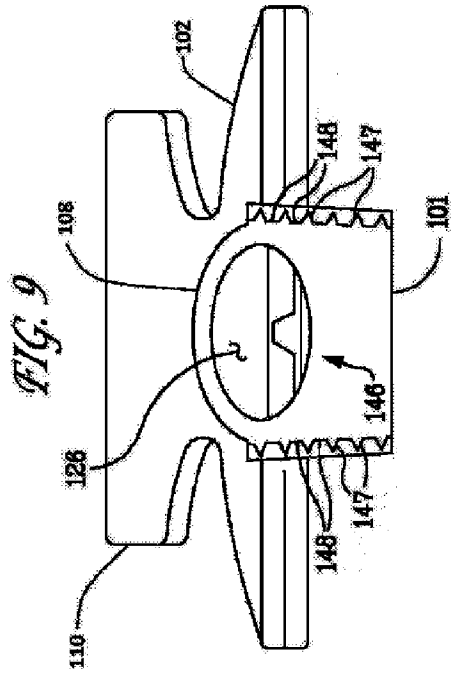

FIG. 9

【図１０】

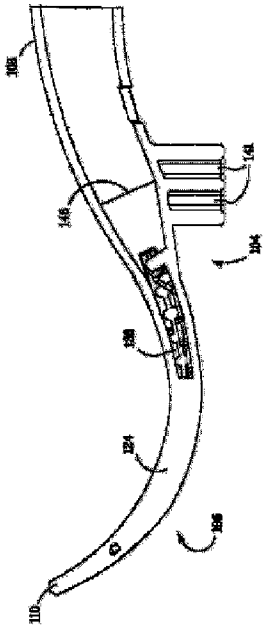

FIG. 10

【図１１】

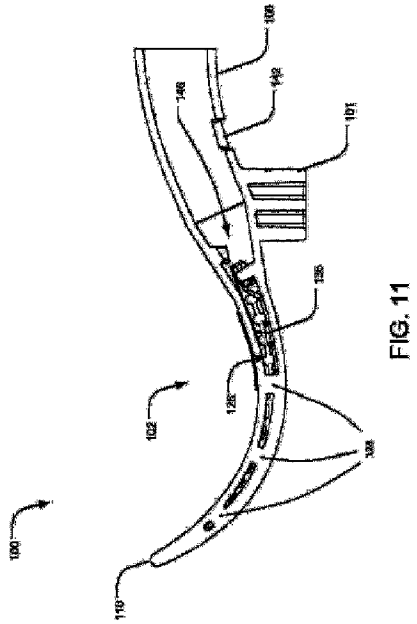

FIG. 11

【国際調査報告】

INTERNATIONAL SEARCH REPORT

International application No.
PCT/US 20/32228

A. CLASSIFICATION OF SUBJECT MATTER
IPC - A61B 1/24, A61C 17/00, A61C 17/06, A61C 17/10, A61C 5/14 (2020.01)
CPC - A61B 1/24, A61C 17/00, A61C 17/06, A61C 17/10, A61C 5/14, A61C 5/90

According to International Patent Classification (IPC) or to both national classification and IPC

B. FIELDS SEARCHED

Minimum documentation searched (classification system followed by classification symbols)
See Search History document

Documentation searched other than minimum documentation to the extent that such documents are included in the fields searched
See Search History document

Electronic data base consulted during the international search (name of data base and, where practicable, search terms used)
See Search History document

C. DOCUMENTS CONSIDERED TO BE RELEVANT

Category*	Citation of document, with indication, where appropriate, of the relevant passages	Relevant to claim No.
Y	US 2017/0156832 A1 (Reyes) 8 June 2017 (08.06.2017), entire document	1-20
Y	US 2014/0212838 A1 (Incept, Inc.) 31 July 2014 (31.07.2014), entire document	1-20
A	US 2015/0335409 A1 (Innerlite, Inc.) 26 Novemebr 2015 (26.11.2015), entire document	1-20
A	US 2009/0274991 A1 (Black et al.) 5 November 2009 (05.11.2009), entire document	1-20
A	US 2001/0008752 A1 (Hirsch et al.) 19 July 2001 (19.07.2001), entire document	1-20

☐ Further documents are listed in the continuation of Box C. ☐ See patent family annex.

* Special categories of cited documents:
"A" document defining the general state of the art which is not considered to be of particular relevance
"D" document cited by the applicant in the international application
"E" earlier application or patent but published on or after the international filing date
"L" document which may throw doubts on priority claim(s) or which is cited to establish the publication date of another citation or other special reason (as specified)
"O" document referring to an oral disclosure, use, exhibition or other means
"P" document published prior to the international filing date but later than the priority date claimed
"T" later document published after the international filing date or priority date and not in conflict with the application but cited to understand the principle or theory underlying the invention
"X" document of particular relevance; the claimed invention cannot be considered novel or cannot be considered to involve an inventive step when the document is taken alone
"Y" document of particular relevance; the claimed invention cannot be considered to involve an inventive step when the document is combined with one or more other such documents, such combination being obvious to a person skilled in the art
"&" document member of the same patent family

Date of the actual completion of the international search	Date of mailing of the international search report
27 JULY 2020	12 AUG 2020
Name and mailing address of the ISA/US Mail Stop PCT, Attn: ISA/US, Commissioner for Patents P.O. Box 1450, Alexandria, Virginia 22313-1450 Facsimile No. 571-273-8300	Authorized officer Lee Young Telephone No. PCT Helpdesk: 571-272-4300

Form PCT/ISA/210 (second sheet) (July 2019)

フロントページの続き

(81)指定国・地域 AP(BW,BW,GH,GH,GM,GM,KE,KE,LR,LR,LS,LS,MW,MW,MZ,MZ,NA,NA,RW,RW,SD,SD,SL,SL,ST,ST,SZ,TZ,TZ,UG,UG,ZM,ZM,ZW,ZW),EA(AM,AM,AZ,AZ,BY,BY,KG,KG,KZ,KZ,RU,RU,TJ,TJ,TM,TM),EP(AL,AL,AT,AT,BE,BG,BG,CH,CH,CY,CZ,CZ,DE,DE,DK,DK,EE,EE,ES,ES,FI,FI,FR,GB,GB,GR,HR,HR,HU,HU,IE,IS,IS,IT,LT,LU,LU,LV,MC,MK,MK,MT,NL,NO,NO,PL,PL,PT,PT,RO,RO,RS,RS,SE,SE,SI,SK,SK,SM,TR,TR),OA(BF,BJ,CF,CG,CI,CM,GA,GN,GQ,GW,KM,ML,MR,NE,SN,TD,TG),AE,AG,AO,AU,BA,BB,BH,BN,BR,BZ,CA,CL,CN,CO,CR,CU,DJ,DM,DO,DZ,EC,EG,GD,GE,GT,HN,ID,IL,IN,IR,JO,JP,KH,KN,KP,KR,KW,LA,LC,LK,LY,MA,MD,ME,MG,MN,MX,MY,NG,NI,NZ,OM,PA,PE,PG,PH,QA,SA,SC,SG,SV,SY,TH,TN,TT,UA,US,UZ,VC,VN,WS,ZA

(72)発明者 ファム、タム、タン
アメリカ合衆国、カリフォルニア州 ９２７０８、ファウンテン バレー、 スイート ビー、グレース アベニュー １１２３０
(72)発明者 グエン、イーサン
アメリカ合衆国、カリフォルニア州 ９２７０８、ファウンテン バレー、 スイート ビー、グレース アベニュー １１２３０
(72)発明者 グエン、ローレン
アメリカ合衆国、カリフォルニア州 ９２７０８、ファウンテン バレー、 スイート ビー、グレース アベニュー １１２３０

Ｆターム(参考) 4C052 AA06 FF07

Electronic Acknowledgement Receipt

EFS ID:	46844182
Application Number:	14228057
International Application Number:	
Confirmation Number:	1983
Title of Invention:	INTRAORAL DEVICE WITH SLIT
First Named Inventor/Applicant Name:	Thien Nguyen
Customer Number:	138718
Filer:	Ruby Lim Chung/Lea Fong
Filer Authorized By:	Ruby Lim Chung
Attorney Docket Number:	INCEP-001COD
Receipt Date:	19-OCT-2022
Filing Date:	27-MAR-2014
Time Stamp:	20:23:23
Application Type:	Utility under 35 USC 111(a)

Payment information:

Submitted with Payment	no

File Listing:

Document Number	Document Description	File Name	File Size(Bytes)/ Message Digest	Multi Part /.zip	Pages (if appl.)
1	Transmittal Letter	INCEP-001COD_IDS_Statement-2_10-19-22.pdf	96619 6b0e5e74e35a95d376664f2142b53e3583056f5a	no	2

Warnings:

Information:					
2	Information Disclosure Statement (IDS) Form (SB08)	INCEP-001COD_IDS_1449-2_10-19-22.pdf	177599 6e9d756dde283d4321aaedfc2d994e049fc905f7	no	1
Warnings:					
Information:					
This is not an USPTO supplied IDS fillable form					
3	Foreign Reference	JP_2022533276.pdf	592057 eeb467770b348a058ce66d73eb493a79d0b959e1	no	16
Warnings:					
Information:					
		Total Files Size (in bytes):	866275		

This Acknowledgement Receipt evidences receipt on the noted date by the USPTO of the indicated documents, characterized by the applicant, and including page counts, where applicable. It serves as evidence of receipt similar to a Post Card, as described in MPEP 503.

New Applications Under 35 U.S.C. 111

If a new application is being filed and the application includes the necessary components for a filing date (see 37 CFR 1.53(b)-(d) and MPEP 506), a Filing Receipt (37 CFR 1.54) will be issued in due course and the date shown on this Acknowledgement Receipt will establish the filing date of the application.

National Stage of an International Application under 35 U.S.C. 371

If a timely submission to enter the national stage of an international application is compliant with the conditions of 35 U.S.C. 371 and other applicable requirements a Form PCT/DO/EO/903 indicating acceptance of the application as a national stage submission under 35 U.S.C. 371 will be issued in addition to the Filing Receipt, in due course.

New International Application Filed with the USPTO as a Receiving Office

If a new international application is being filed and the international application includes the necessary components for an international filing date (see PCT Article 11 and MPEP 1810), a Notification of the International Application Number and of the International Filing Date (Form PCT/RO/105) will be issued in due course, subject to prescriptions concerning national security, and the date shown on this Acknowledgement Receipt will establish the international filing date of the application.

IN THE UNITED STATES PATENT AND TRADEMARK OFFICE

Group Art Unit: 3772 | Examiner: Mirayda A. Aponte

Serial No.: 14/228,057 | Filed: March 27, 2014

In re Application of: Thien Nguyen

Confirmation No.: 1983 | Customer No.: 138718

Title: INTRAORAL DEVICE WITH SLIT

SUPPLEMENTAL INFORMATION DISCLOSURE STATEMENT
Under 37 C.F.R. § 1.56 and 1.97-1.98

Examiner:

Pursuant to the provisions of 37 C.F.R. §§ 1.56 and 1.97-98 of the Rules of Practice in Patent Cases, enclosed herewith is form PTO-SB-08, listing several references. The Examiner is requested to make these references of official record in the application.

The references cited may be material to examination of the application and are submitted in compliance with the Applicant's duty of disclosure as defined by 37 C.F.R. § 1.56.

Applicants hereby declare, pursuant to 37 C.F.R. §1.97(e)(1), that each item of information contained in the information disclosure statement was first cited in any communication from a foreign patent office in a counterpart foreign application not more than three months prior to the filing of the information disclosure statement.

No representation is made or intended as to the completeness of this list, nor is the inclusion of any reference an admission that it is prior art or pertinent to this application.

Respectfully submitted,
POLSINELLI LLP

Dated: October 19, 2022

By: _____/Ruby L. Chung/_____
Ruby L. Chung (Reg. No. 76,809)
Polsinelli LLP
Three Embarcadero Center, Suite 2400
San Francisco, CA 94111
415-248-2100 (Main)
patentdocketing@polsinelli.com

IN THE UNITED STATES PATENT AND TRADEMARK OFFICE

APPLICANT:	Dryshield, LLC
INVENTOR(S):	Thien Nguyen, et al.
APPLICATION NO.:	14/228,057
FILED:	March 27, 2014
TITLE:	INTRAORAL DEVICE WITH SLIT
EXAMINER:	Mirayda A. Aponte
ART UNIT:	3772
CONF. NO.:	1983
ATTY.DKT.NO.:	INCEP-001COD

MAIL STOP AMENDMENT
COMMISSIONER FOR PATENTS
P.O. BOX 1450
ALEXANDRIA, VA 22313-1450

RESPONSE K

Examiner Aponte:

In response to the office action mailed September 2, 2022 (*Office Action*), please consider the following amendments and remarks. Amendments to the specification begins on page two, remarks begin on page three, and a conclusion appears on page four.

IN THE SPECIFICATION

PLEASE AMEND THE SPECIFICATION AS FOLLOWS:

[0043] The mouthpiece may be used with a mouth prop 160, as illustrated in FIGS. 1 (with a mouth prop 160) and FIGS. 2 (illustrated without the mouth prop 160). FIGS. 3A-E provide different close-up views of an exemplary mouth prop 160. The removable strap 310 may be attached to mouth prop 160, which may be used to prop open a patient's mouth and teeth. In this regard, the suction connector portion 120 may additionally have an external plug 220 (FIG. 2C) protruding from the posterior side of the suction connector portion 120. Such a plug 220 may correspond to and serve to connect with an opening in the mouth prop 160. The mouth prop 160 may be reinforced by the presence of the ~~plug 220~~ bite block portion 320 in the opening, thereby resulting in a more crush-resistant, nearly incompressible, and stable mouth prop 160. In some embodiments, the suction connector portion 120 may further have a cutout 230 (e.g., which may be shaped as a logo) providing extra interlocking with a corresponding protrusion (e.g., which may also be shaped as a logo) on an external high-suction vacuum adapter.

REMARKS

Drawings

The drawings are objected to as failing to comply with 37 CFR 1.84(p)(5) because they include the reference number 320 of Fig. 3A not found in the specification. *Office Action*, 2. Paragraph [0043] of the specification has been amended in compliance with 37 CFR 1.121(b). Clean and marked-up substitute *Specification*s with the amendments are also provided herewith. Withdrawal of the objection to the drawings is respectfully requested.

Rejections under 35 U.S.C. § 112

Claims 1, 2, 4-8, 10, 14-16 and 21-30 are rejected under 35 U.S.C. § 112(a) as purportedly failing to comply with the written description requirement. *Id.* at 3. More specifically, the *Office Action* argues that the present application does not disclose the option of having one edge on each of the first wall and the second wall. *Id.* The Applicant respectfully disagrees.

MPEP 2161.01 (III) states in regards to enablement that "the scope of the claims must be less than or equal to the scope of the enablement provided by the specification." Although the *Specification* describes "the walls of the superior and inferior edges," the Applicant is entitled to claim one or more of the edges described in the *Specification*. *Specification*, [0035]. Therefore, the *Specification* as filed provides support for 'a first wall defined by one or more edges' and 'a second wall defined by one of more edges that correspond to the one or more edges of the first wall' as claimed.

Applicant respectfully requests that the rejections of the claims under 35 U.S.C. § 112 be withdrawn.

CONCLUSION

Based on the foregoing remarks, the Applicant respectfully contends that all outstanding rejections and objections have been overcome. Accordingly, it is respectfully submitted that the present application is in condition for allowance.

If the Examiner has any questions regarding the case, the Examiner is invited to contact the Applicant's undersigned representative.

Respectfully submitted,

December 2, 2022

By: / Ruby Chung /

Ruby Chung (76,809)
POLSINELLI *LLP*
3 Embarcadero Center, Suite 2400
San Francisco, CA 94111
Phone: (415) 248-2121
patentdocketing@polsinelli.com

INTRAORAL DEVICE WITH SLIT

CROSS-REFERENCE TO RELATED APPLICATIONS

[0001] The present application is a continuation and claims the priority benefit of U.S. patent application 14/100,323 filed December 9, 2013, which claims the priority benefit of U.S. provisional patent application number 61/734,939 filed December 7, 2012, the disclosure of which is incorporated herein by reference.

BACKGROUND OF THE INVENTION

1. Field of the Invention

[0002] The present invention generally relates to the field of dental mouthpieces. More specifically, the present invention relates to intraoral dental suction and isolation mouthpieces.

2. Description of Related Art

[0003] Various mouthpieces are currently used by dental health professionals, dental hygienists, and dental assistants in the field of dentistry. In the past, a dental patient has been treated by a traditional two-person team that comprises a dental professional and a dental assistant. Further, dental treatment may be provided by the team using many different types of dental equipment and materials. Such dental equipment and materials may include such items as an intraoral mirror, a bite block, a slow speed suction ejector, a high speed suction ejector, gauzes, cotton rolls, and dry angles. Each item of dental equipment may be used for different purposes, though some may be used in combination for some types of dental services. As such, a dental professional seeking to provide such dental services may need to use multiple items of such dental equipment. An important role of the dental assistant is therefore to assist the dental professional in

coordinating the use of these multiple items of different equipment and materials.

[0004] There is, therefore, a need in the art for improved systems and methods of providing dental services in a more efficient, comfortable, and safe manner to the dental patient.

SUMMARY OF THE CLAIMED INVENTION

[0005] Embodiments of the present invention may include a mouthpiece that may be attached to a high-suction dental adapter for the purpose of assisting the dental staff during dental procedures through chair-side, hands-free suction, and isolation. Such a mouthpiece may comprise a main body portion, a cheek retractor portion, and a suction connector portion. In some embodiments, the main body portion, cheek retractor portion, and suction connector portion (and sub-portions thereof) may be molded in one piece, preferably by injection molding. In an exemplary embodiment, the mouthpiece may be made of a material that is flexible, translucent, conducive to injection molding, high heat-resistant, and autoclavable. Such a material may include silicone. Because the mouthpiece may be made of a high heat-resistant and autoclavable material, such a mouthpiece may be reusable.

[0006] The main body portion may comprise an enclosed pocket made up of an anterior wall, a posterior wall, and a side wall in between the anterior and posterior walls. The side wall may be perforated with a plurality of perforations. Such perforations may constitute a mesh. Additional perforations may be located on the anterior and posterior walls. The main body portion may further include a slit along a longitudinal, central axis on the anterior wall. Such openings (*e.g.*, perforations and slit) allow for suction of air, fluids, and small debris from the patient's mouth, through the openings into the interior portion, and into the suction connector portion towards a suction source. Because the mouthpiece is made of a flexible and resilient material (*e.g.*, silicone), the mouthpiece may be bent when placed in a patient's mouth to conform to the shape of the mouth. When properly positioned, the suction connector portion may protrude from one side of the patient's mouth, while the main body lies against the back of the patient's mouth, and the cheek retractor presses against the patient's cheek on the opposite side of the patient's mouth.

[0007] The main body may further include an protruding bridge structure on the interior surface of the posterior wall. Such a bridge structure may protrude from the

interior surface in a wave shape with crests and troughs. The crests provide a plurality of contact points with the anterior wall to keep the anterior wall separated from the posterior wall during suction. Meanwhile, the troughs provide gaps that allow for suction of air, fluids, and small debris through the bridge structure.

BRIEF DESCRIPTION OF THE FIGURES

[0008] FIG. 1A is a perspective view of an exemplary mouthpiece with a detachable mouth prop.

[0009] FIG. 1B is a top view of the exemplary mouthpiece and detachable mouth prop of FIG. 1A.

[0010] FIG. 1C is a bottom view of the exemplary mouthpiece and detachable mouth prop of FIG. 1A.

[0011] FIG. 1D is a side view of the exemplary mouthpiece and detachable mouth prop of FIG. 1A.

[0012] FIG. 1E is a cross-sectional view of the exemplary mouthpiece and detachable mouth prop of FIG. 1A.

[0013] FIG. 2A is a perspective view of the exemplary mouthpiece of FIG. 1A where the detachable mouth prop has been detached.

[0014] FIG. 2B is a top view of the exemplary mouthpiece of FIG. 2A.

[0015] FIG. 2C is a bottom view of the exemplary mouthpiece of FIG. 2A.

[0016] FIG. 2D is a side view of the exemplary mouthpiece of FIG. 2A.

[0017] FIG. 2E is a cross-sectional view of the exemplary mouthpiece of FIG. 2A.

[0018] FIG. 3A is a front view of an exemplary mouth prop.

[0019] FIG. 3B is a back view of the exemplary mouth prop of FIG. 3A.

[0020] FIG. 3C is a bottom view of the exemplary mouth prop of FIG. 3A.

[0021] FIG. 3D is a perspective view of the exemplary mouth prop of FIG. 3A .

[0022] FIG. 3E is a side view of the exemplary mouth prop of FIG. 3A.

[0023] FIG. 3F is a top view of the exemplary mouth prop of FIG. 3A.

[0024] FIG. 4 is a close-up view of exemplary mesh sides in an exemplary mouthpiece.

[0025] FIG. 5 is a close-up view of an internal bridge in an exemplary mouthpiece.

[0026] FIG. 6A is a close-up view of an exemplary reinforcing bar in an exemplary mouthpiece.

[0027] FIG. 6B is a cross-sectional view of the exemplary reinforcing bar of FIG. 6A.

[0028] FIG. 7A is a close-up view of an exemplary cheek retractor portion in an exemplary mouthpiece.

[0029] FIG. 7B is a cross-sectional view of the exemplary cheek retractor portion of FIG. 7A.

DETAILED DESCRIPTION

[0030] Embodiments of the present invention provide for a mouthpiece comprising a main body portion, a cheek retractor portion, and a suction connector portion. In some embodiments, the main body portion, cheek retractor portion, and suction connector portion (and sub-portions thereof) may be molded as one-piece, preferably by injection molding. In an exemplary embodiment, the mouthpiece may be made of a material that is flexible, translucent, conducive to injection molding, high heat-resistant, and autoclavable. Such a material may include silicone. Because the mouthpiece may be made of a high heat-resistant and autoclavable material, such a mouthpiece may be reusable.

[0031] FIGs. 1A-E are different views of an exemplary mouthpiece with an attachable mouth prop 160, while FIGs. 2A-E are different views of the exemplary mouthpiece of FIG. 1A where the attachable mouth prop 160 has been detached. Such a mouthpiece may include a main body portion 110, a suction connector portion 120, and a cheek retractor portion 130.

[0032] The main body portion 110 may include mesh or perforations140, a stability bar 150, an open slit 170, and an internal bridge 180. The main body potion 110 may connect to a suction connector portion 120 on one end and a cheek retractor portion 130 at the other end. Such a cheek retractor portion 130 may be configured to press against and retract a patient's cheek away from the patient's teeth. When placed in a patient's mouth, the suction connector portion 120 may protrude from one side of the patient's mouth, while the main body portion 110 lies against the back of the patient's mouth, and the cheek retractor portion 130 retracts the patient's cheek on the opposite side of the patient's mouth. The flexibility of the material used to form the mouthpiece allows for some bending when placed in the patient's mouth. The material is, however, resilient enough that the cheek retractor portion presses against the inside of the patient's cheek with such pressure being sufficient to move the cheek away from the patient's teeth.

[0033] An exemplary main body portion 110, when placed in a mouth, may include an

anterior wall facing the front of the mouth (*e.g.*, the side with slit 170) and a posterior wall facing the back of the mouth. The two walls may connect at a superior wall and an inferior wall forming a body that is at least partially enclosed.

Superior may be used herein to refer to the side that rests against a roof of a patient's mouth when placed therein, and inferior may be used to refer to the side that rests against the floor of the patient's mouth. The superior and inferior sides may be formed identically, which may allow for the mouthpiece to change orientation such that the superior side may appear as the inferior side and vice versa, in the new orientation. When in use, the respective sides of the main body portion 110 may serve to protect and separate the top of the mouth and the bottom of the mouth/tongue. In addition, the main body portion 110 may also serve to protect the back of the mouth (*e.g.*, throat and airway) from falling debris.

[0034] Much of the main body portion 110 of the mouthpiece may be shaped as a straight-line arrowhead or shield whose base generally conforms to the intraoral shape of a patient's mouth. Differently-sized mouthpieces may be provided for differently-sized mouths of adults and children. Part of the base side of the arrowhead may be formed with thicker walls than the rest of the main body. Such thickening may provide additional stability.

[0035] In addition, the main body portion 110 of the mouthpiece may include a plurality of holes 140 distributed along the superior and inferior sides of the anterior and posterior walls to assist in suctioning of water, saliva and debris from the oral cavity. In some embodiments, a set of holes may also form a mesh along the walls of the superior and inferior edges. FIG. 4 is a close-up view of an exemplary mesh wall in an exemplary mouthpiece.

[0036] At the narrow end of the arrowhead that connects to the cheek retractor portion 130, the main body portion 110 may include a rectangular portion. Narrower than the base of the arrowhead, the rectangle may additionally include a reinforcing bar (or stability bar) 150 (described in further detail below) and may be at least partially crossed by a slit 170 (described in further detail below) into the interior of the pocket of

the main body portion 110.

[0037] Stability bar 150 may be a protrusion or otherwise a thickened area that reinforces the stability of the rectangular portion and assist in shaping this region to the intraoral posterior shape of a patient's mouth. FIG. 6A is a close-up view of an exemplary stability bar 150 of an exemplary mouthpiece. FIG. 6B is a cross-sectional view of the exemplary reinforcing bar in the cheek retractor connector portion of FIG. 6A.

[0038] In some embodiments, the internal, rectangular-shaped reinforcing or stability bar 150 may be located distally to the internal wavelike bridge structure 180 and attached to both the interior side of the posterior surface of the main body and the rectangular portion. Such a stability bar 150 may be located in the area where a positioned mouthpiece begins to wrap from the lingual side of the most posterior mandibular tooth, around the distal side of the most posterior tooth, and to anterior side of the most posterior mandibular tooth, thereby assisting in shaping the mouthpiece to the general intraoral shape of a patient's mouth.

[0039] Various embodiments of the mouthpiece may further include a longitudinal, open slit 170 extending over approximately two-thirds of the main body on the anterior surface. Running along the center of the main body across the rectangle and most of the arrowhead, such a slit 170 may assist in capture and suction of water, saliva and debris, as well as assisting in cleaning and maintenance.

[0040] Additionally, the main body of the mouthpiece may include a bridge structure 180 on an interior surface to ensure that the anterior and posterior surfaces remain separated during suction. FIG. 1E is a cross-sectional view of the mouthpiece in which the bridge structure 180 is illustrated. FIG. 5 is a close-up view of the bridge structure 180 without the surrounding walls of the main body portion. Such a bridge structure 180 may be formed as an wave-like protrusion that generally corresponds to the distance between the anterior and posterior walls extending substantially (*e.g.*, within 1 mm) the full distance at its crest and substantially flush to the surface at its trough. In some embodiments, the bridge structure 180 may be centrally-located in the main body

portion 110 of the mouthpiece. The gaps (or troughs) between the waves of the bridge structure 180 assist in the suction-driven transfer of water and saliva to the suction connector portion 120 and ultimately, into a central suction vacuum. In some embodiments, the bridge structure 180 may follow the shape of a logo (e.g., an arrowhead or shield).

[0041] The suction connector portion 120 may be oval-shaped and also attached to the main body portion 110. The suction connector portion 120 may be formed with thicker walls than the main body portion 110 and configured to attach to a high-suction vacuum adapter and to assist in transferring water, saliva, and debris from the oral cavity to the external adapter for removal. The suction connector portion 120 may also include an internal stop to assist in sliding the mouthpiece onto the adapter to a desired depth. The suction connector portion 120 may additionally have an external, concave, notched region 210 that corresponds to a removable strap such that when the strap is in place, the external walls of the strap and the rest of the connector portion may be flush.

[0042] The cheek retractor portion 130 is illustrated as a hammerhead distal region, which may be attached to the main body portion 110. FIG. 7A is a close-up view of an exemplary cheek retractor portion 130 in an exemplary mouthpiece. FIG. 7B is a cross-sectional view of the exemplary cheek retractor portion 130 of FIG. 7A.

[0043] The mouthpiece may be used with a mouth prop 160, as illustrated in FIGs. 1 (with a mouth prop 160) and FIGs. 2 (illustrated without the mouth prop 160). FIGs. 3A-E provide different close-up views of an exemplary mouth prop 160. The removable strap 310 may be attached to mouth prop 160, which may be used to prop open a patient's mouth and teeth. In this regard, the suction connector portion 120 may additionally have an external plug 220 (FIG. 2C) protruding from the posterior side of the suction connector portion 120. Such a plug 220 may correspond to and serve to connect with an opening in the mouth prop 160. The mouth prop 160 may be reinforced by the presence of the ~~plug 220~~ bite block portion 320 in the opening, thereby resulting in a more crush-resistant, nearly incompressible, and stable mouth prop 160. In some embodiments, the suction connector portion 120 may further have a cutout 230

(*e.g.*, which may be shaped as a logo) providing extra interlocking with a corresponding protrusion (*e.g.*, which may also be shaped as a logo) on an external high-suction vacuum adapter.

[0044] The mouth prop 160 may be made of thickened silicone material injection molded in a single piece with an elastic strap corresponding to the circumference of the suction connector portion. The mouth prop 160 has an internal, rectangular-shaped female slot designed to fit snugly with the external, rectangular-shaped male plug 220 of the suction connector portion 120 of the mouthpiece. Mouth props may be made in different sizes for differently sized mouths. Because the mouth prop and mouthpiece are detachable from each other, different sizes of each may be mixed and matched as needed for a particular patient's mouth.

[0045] The mouthpiece as described herein may be used with a one-piece, autoclavable, high-suction vacuum adapter. Such a high-suction vacuum body adapter may be made of a single homogenous material. Having a single lever design, such a vacuum adapter may function in the same manner as all the current high-suction vacuum evacuators and saliva ejectors in controlling the removal of water, saliva, and debris from the oral cavity to the outside vacuum source. The single lever may be designed to control the removal of water, saliva, and debris from the at least partially enclosed so main body through a single, large evacuation conduit within the suction connector portion.

[0046] While various embodiments have been described above, it should be understood that they have been presented by way of example only, and not limitation. The descriptions are not intended to limit the scope of the invention to the particular forms set forth herein. Thus, the breadth and scope of a preferred embodiment should not be limited by any of the above-described exemplary embodiments. It should be understood that the above description is illustrative and not restrictive. To the contrary, the present descriptions are intended to cover such alternatives, modifications, and equivalents as may be included within the spirit and scope of the invention as defined by the appended claims and otherwise appreciated by one of ordinary skill in the art.

The scope of the invention should, therefore, be determined not with reference to the above description, but instead should be determined with reference to the appended claims along with their full scope of equivalents.

INTRAORAL DEVICE WITH SLIT

CROSS-REFERENCE TO RELATED APPLICATIONS

[0001] The present application is a continuation and claims the priority benefit of U.S. patent application 14/100,323 filed December 9, 2013, which claims the priority benefit of U.S. provisional patent application number 61/734,939 filed December 7, 2012, the disclosure of which is incorporated herein by reference.

BACKGROUND OF THE INVENTION

1. Field of the Invention

[0002] The present invention generally relates to the field of dental mouthpieces. More specifically, the present invention relates to intraoral dental suction and isolation mouthpieces.

2. Description of Related Art

[0003] Various mouthpieces are currently used by dental health professionals, dental hygienists, and dental assistants in the field of dentistry. In the past, a dental patient has been treated by a traditional two-person team that comprises a dental professional and a dental assistant. Further, dental treatment may be provided by the team using many different types of dental equipment and materials. Such dental equipment and materials may include such items as an intraoral mirror, a bite block, a slow speed suction ejector, a high speed suction ejector, gauzes, cotton rolls, and dry angles. Each item of dental equipment may be used for different purposes, though some may be used in combination for some types of dental services. As such, a dental professional seeking to provide such dental services may need to use multiple items of such dental equipment. An important role of the dental assistant is therefore to assist the dental professional in

coordinating the use of these multiple items of different equipment and materials.

[0004] There is, therefore, a need in the art for improved systems and methods of providing dental services in a more efficient, comfortable, and safe manner to the dental patient.

SUMMARY OF THE CLAIMED INVENTION

[0005] Embodiments of the present invention may include a mouthpiece that may be attached to a high-suction dental adapter for the purpose of assisting the dental staff during dental procedures through chair-side, hands-free suction, and isolation. Such a mouthpiece may comprise a main body portion, a cheek retractor portion, and a suction connector portion. In some embodiments, the main body portion, cheek retractor portion, and suction connector portion (and sub-portions thereof) may be molded in one piece, preferably by injection molding. In an exemplary embodiment, the mouthpiece may be made of a material that is flexible, translucent, conducive to injection molding, high heat-resistant, and autoclavable. Such a material may include silicone. Because the mouthpiece may be made of a high heat-resistant and autoclavable material, such a mouthpiece may be reusable.

[0006] The main body portion may comprise an enclosed pocket made up of an anterior wall, a posterior wall, and a side wall in between the anterior and posterior walls. The side wall may be perforated with a plurality of perforations. Such perforations may constitute a mesh. Additional perforations may be located on the anterior and posterior walls. The main body portion may further include a slit along a longitudinal, central axis on the anterior wall. Such openings (*e.g.*, perforations and slit) allow for suction of air, fluids, and small debris from the patient's mouth, through the openings into the interior portion, and into the suction connector portion towards a suction source. Because the mouthpiece is made of a flexible and resilient material (*e.g.*, silicone), the mouthpiece may be bent when placed in a patient's mouth to conform to the shape of the mouth. When properly positioned, the suction connector portion may protrude from one side of the patient's mouth, while the main body lies against the back of the patient's mouth, and the cheek retractor presses against the patient's cheek on the opposite side of the patient's mouth.

[0007] The main body may further include an protruding bridge structure on the interior surface of the posterior wall. Such a bridge structure may protrude from the

interior surface in a wave shape with crests and troughs. The crests provide a plurality of contact points with the anterior wall to keep the anterior wall separated from the posterior wall during suction. Meanwhile, the troughs provide gaps that allow for suction of air, fluids, and small debris through the bridge structure.

BRIEF DESCRIPTION OF THE FIGURES

[0008] FIG. 1A is a perspective view of an exemplary mouthpiece with a detachable mouth prop.

[0009] FIG. 1B is a top view of the exemplary mouthpiece and detachable mouth prop of FIG. 1A.

[0010] FIG. 1C is a bottom view of the exemplary mouthpiece and detachable mouth prop of FIG. 1A.

[0011] FIG. 1D is a side view of the exemplary mouthpiece and detachable mouth prop of FIG. 1A.

[0012] FIG. 1E is a cross-sectional view of the exemplary mouthpiece and detachable mouth prop of FIG. 1A.

[0013] FIG. 2A is a perspective view of the exemplary mouthpiece of FIG. 1A where the detachable mouth prop has been detached.

[0014] FIG. 2B is a top view of the exemplary mouthpiece of FIG. 2A.

[0015] FIG. 2C is a bottom view of the exemplary mouthpiece of FIG. 2A.

[0016] FIG. 2D is a side view of the exemplary mouthpiece of FIG. 2A.

[0017] FIG. 2E is a cross-sectional view of the exemplary mouthpiece of FIG. 2A.

[0018] FIG. 3A is a front view of an exemplary mouth prop.

[0019] FIG. 3B is a back view of the exemplary mouth prop of FIG. 3A.

[0020] FIG. 3C is a bottom view of the exemplary mouth prop of FIG. 3A.

[0021] FIG. 3D is a perspective view of the exemplary mouth prop of FIG. 3A .

[0022] FIG. 3E is a side view of the exemplary mouth prop of FIG. 3A.

[0023] FIG. 3F is a top view of the exemplary mouth prop of FIG. 3A.

[0024] FIG. 4 is a close-up view of exemplary mesh sides in an exemplary mouthpiece.

[0025] FIG. 5 is a close-up view of an internal bridge in an exemplary mouthpiece.

[0026] FIG. 6A is a close-up view of an exemplary reinforcing bar in an exemplary mouthpiece.

[0027] FIG. 6B is a cross-sectional view of the exemplary reinforcing bar of FIG. 6A.

[0028] FIG. 7A is a close-up view of an exemplary cheek retractor portion in an exemplary mouthpiece.

[0029] FIG. 7B is a cross-sectional view of the exemplary cheek retractor portion of FIG. 7A.

DETAILED DESCRIPTION

[0030] Embodiments of the present invention provide for a mouthpiece comprising a main body portion, a cheek retractor portion, and a suction connector portion. In some embodiments, the main body portion, cheek retractor portion, and suction connector portion (and sub-portions thereof) may be molded as one-piece, preferably by injection molding. In an exemplary embodiment, the mouthpiece may be made of a material that is flexible, translucent, conducive to injection molding, high heat-resistant, and autoclavable. Such a material may include silicone. Because the mouthpiece may be made of a high heat-resistant and autoclavable material, such a mouthpiece may be reusable.

[0031] FIGs. 1A-E are different views of an exemplary mouthpiece with an attachable mouth prop 160, while FIGs. 2A-E are different views of the exemplary mouthpiece of FIG. 1A where the attachable mouth prop 160 has been detached. Such a mouthpiece may include a main body portion 110, a suction connector portion 120, and a cheek retractor portion 130.

[0032] The main body portion 110 may include mesh or perforations140, a stability bar 150, an open slit 170, and an internal bridge 180. The main body potion 110 may connect to a suction connector portion 120 on one end and a cheek retractor portion 130 at the other end. Such a cheek retractor portion 130 may be configured to press against and retract a patient's cheek away from the patient's teeth. When placed in a patient's mouth, the suction connector portion 120 may protrude from one side of the patient's mouth, while the main body portion 110 lies against the back of the patient's mouth, and the cheek retractor portion 130 retracts the patient's cheek on the opposite side of the patient's mouth. The flexibility of the material used to form the mouthpiece allows for some bending when placed in the patient's mouth. The material is, however, resilient enough that the cheek retractor portion presses against the inside of the patient's cheek with such pressure being sufficient to move the cheek away from the patient's teeth.

[0033] An exemplary main body portion 110, when placed in a mouth, may include an

anterior wall facing the front of the mouth (*e.g.*, the side with slit 170) and a posterior wall facing the back of the mouth. The two walls may connect at a superior wall and an inferior wall forming a body that is at least partially enclosed.

Superior may be used herein to refer to the side that rests against a roof of a patient's mouth when placed therein, and inferior may be used to refer to the side that rests against the floor of the patient's mouth. The superior and inferior sides may be formed identically, which may allow for the mouthpiece to change orientation such that the superior side may appear as the inferior side and vice versa, in the new orientation. When in use, the respective sides of the main body portion 110 may serve to protect and separate the top of the mouth and the bottom of the mouth/tongue. In addition, the main body portion 110 may also serve to protect the back of the mouth (*e.g.*, throat and airway) from falling debris.

[0034] Much of the main body portion 110 of the mouthpiece may be shaped as a straight-line arrowhead or shield whose base generally conforms to the intraoral shape of a patient's mouth. Differently-sized mouthpieces may be provided for differently-sized mouths of adults and children. Part of the base side of the arrowhead may be formed with thicker walls than the rest of the main body. Such thickening may provide additional stability.

[0035] In addition, the main body portion 110 of the mouthpiece may include a plurality of holes 140 distributed along the superior and inferior sides of the anterior and posterior walls to assist in suctioning of water, saliva and debris from the oral cavity. In some embodiments, a set of holes may also form a mesh along the walls of the superior and inferior edges. FIG. 4 is a close-up view of an exemplary mesh wall in an exemplary mouthpiece.

[0036] At the narrow end of the arrowhead that connects to the cheek retractor portion 130, the main body portion 110 may include a rectangular portion. Narrower than the base of the arrowhead, the rectangle may additionally include a reinforcing bar (or stability bar) 150 (described in further detail below) and may be at least partially crossed by a slit 170 (described in further detail below) into the interior of the pocket of

the main body portion 110.

[0037] Stability bar 150 may be a protrusion or otherwise a thickened area that reinforces the stability of the rectangular portion and assist in shaping this region to the intraoral posterior shape of a patient's mouth. FIG. 6A is a close-up view of an exemplary stability bar 150 of an exemplary mouthpiece. FIG. 6B is a cross-sectional view of the exemplary reinforcing bar in the cheek retractor connector portion of FIG. 6A.

[0038] In some embodiments, the internal, rectangular-shaped reinforcing or stability bar 150 may be located distally to the internal wavelike bridge structure 180 and attached to both the interior side of the posterior surface of the main body and the rectangular portion. Such a stability bar 150 may be located in the area where a positioned mouthpiece begins to wrap from the lingual side of the most posterior mandibular tooth, around the distal side of the most posterior tooth, and to anterior side of the most posterior mandibular tooth, thereby assisting in shaping the mouthpiece to the general intraoral shape of a patient's mouth.

[0039] Various embodiments of the mouthpiece may further include a longitudinal, open slit 170 extending over approximately two-thirds of the main body on the anterior surface. Running along the center of the main body across the rectangle and most of the arrowhead, such a slit 170 may assist in capture and suction of water, saliva and debris, as well as assisting in cleaning and maintenance.

[0040] Additionally, the main body of the mouthpiece may include a bridge structure 180 on an interior surface to ensure that the anterior and posterior surfaces remain separated during suction. FIG. 1E is a cross-sectional view of the mouthpiece in which the bridge structure 180 is illustrated. FIG. 5 is a close-up view of the bridge structure 180 without the surrounding walls of the main body portion. Such a bridge structure 180 may be formed as an wave-like protrusion that generally corresponds to the distance between the anterior and posterior walls extending substantially (*e.g.*, within 1 mm) the full distance at its crest and substantially flush to the surface at its trough. In some embodiments, the bridge structure 180 may be centrally-located in the main body

portion 110 of the mouthpiece. The gaps (or troughs) between the waves of the bridge structure 180 assist in the suction-driven transfer of water and saliva to the suction connector portion 120 and ultimately, into a central suction vacuum. In some embodiments, the bridge structure 180 may follow the shape of a logo (e.g., an arrowhead or shield).

[0041] The suction connector portion 120 may be oval-shaped and also attached to the main body portion 110. The suction connector portion 120 may be formed with thicker walls than the main body portion 110 and configured to attach to a high-suction vacuum adapter and to assist in transferring water, saliva, and debris from the oral cavity to the external adapter for removal. The suction connector portion 120 may also include an internal stop to assist in sliding the mouthpiece onto the adapter to a desired depth. The suction connector portion 120 may additionally have an external, concave, notched region 210 that corresponds to a removable strap such that when the strap is in place, the external walls of the strap and the rest of the connector portion may be flush.

[0042] The cheek retractor portion 130 is illustrated as a hammerhead distal region, which may be attached to the main body portion 110. FIG. 7A is a close-up view of an exemplary cheek retractor portion 130 in an exemplary mouthpiece. FIG. 7B is a cross-sectional view of the exemplary cheek retractor portion 130 of FIG. 7A.

[0043] The mouthpiece may be used with a mouth prop 160, as illustrated in FIGs. 1 (with a mouth prop 160) and FIGs. 2 (illustrated without the mouth prop 160). FIGs. 3A-E provide different close-up views of an exemplary mouth prop 160. The removable strap 310 may be attached to mouth prop 160, which may be used to prop open a patient's mouth and teeth. In this regard, the suction connector portion 120 may additionally have an external plug 220 (FIG. 2C) protruding from the posterior side of the suction connector portion 120. Such a plug 220 may correspond to and serve to connect with an opening in the mouth prop 160. The mouth prop 160 may be reinforced by the presence of the bite block portion 320 in the opening, thereby resulting in a more crush-resistant, nearly incompressible, and stable mouth prop 160. In some embodiments, the suction connector portion 120 may further have a cutout 230 (*e.g.*,

which may be shaped as a logo) providing extra interlocking with a corresponding protrusion (*e.g.*, which may also be shaped as a logo) on an external high-suction vacuum adapter.

[0044] The mouth prop 160 may be made of thickened silicone material injection molded in a single piece with an elastic strap corresponding to the circumference of the suction connector portion. The mouth prop 160 has an internal, rectangular-shaped female slot designed to fit snugly with the external, rectangular-shaped male plug 220 of the suction connector portion 120 of the mouthpiece. Mouth props may be made in different sizes for differently sized mouths. Because the mouth prop and mouthpiece are detachable from each other, different sizes of each may be mixed and matched as needed for a particular patient's mouth.

[0045] The mouthpiece as described herein may be used with a one-piece, autoclavable, high-suction vacuum adapter. Such a high-suction vacuum body adapter may be made of a single homogenous material. Having a single lever design, such a vacuum adapter may function in the same manner as all the current high-suction vacuum evacuators and saliva ejectors in controlling the removal of water, saliva, and debris from the oral cavity to the outside vacuum source. The single lever may be designed to control the removal of water, saliva, and debris from the at least partially enclosed so main body through a single, large evacuation conduit within the suction connector portion.

[0046] While various embodiments have been described above, it should be understood that they have been presented by way of example only, and not limitation. The descriptions are not intended to limit the scope of the invention to the particular forms set forth herein. Thus, the breadth and scope of a preferred embodiment should not be limited by any of the above-described exemplary embodiments. It should be understood that the above description is illustrative and not restrictive. To the contrary, the present descriptions are intended to cover such alternatives, modifications, and equivalents as may be included within the spirit and scope of the invention as defined by the appended claims and otherwise appreciated by one of ordinary skill in the art.

The scope of the invention should, therefore, be determined not with reference to the above description, but instead should be determined with reference to the appended claims along with their full scope of equivalents.

Electronic Acknowledgement Receipt

EFS ID:	47138556
Application Number:	14228057
International Application Number:	
Confirmation Number:	1983
Title of Invention:	INTRAORAL DEVICE WITH SLIT
First Named Inventor/Applicant Name:	Thien Nguyen
Customer Number:	138718
Filer:	Ruby Lim Chung
Filer Authorized By:	
Attorney Docket Number:	INCEP-001COD
Receipt Date:	02-DEC-2022
Filing Date:	27-MAR-2014
Time Stamp:	23:11:10
Application Type:	Utility under 35 USC 111(a)

Payment information:

Submitted with Payment	no

File Listing:

Document Number	Document Description	File Name	File Size(Bytes)/ Message Digest	Multi Part /.zip	Pages (if appl.)
1		INCEP-001COD_Response_12-02-2022.pdf	143511 41e3a66d1e35e0f6d7ce9d7f15d38769db2db424	yes	4

	Multipart Description/PDF files in .zip description		
	Document Description	**Start**	**End**
	Amendment/Request for Reconsideration-After Non-Final Rejection	1	1
	Specification	2	2
	Applicant Arguments/Remarks Made in an Amendment	3	4

Warnings:					
Information:					
2	Specification	INCEP-001COD_SPEC_marked_12-2-2022.pdf	137950 5ff4f064e8e3a0ab5abe7d99d37514be0fec7f62	no	12
Warnings:					
Information:					
3	Specification	INCEP-001COD_SPEC_clean_12-2-2022.pdf	137871 7f747043a2b5665c07359bf0fdc99d20d6a55e1d	no	12
Warnings:					
Information:					
		Total Files Size (in bytes):	419332		

This Acknowledgement Receipt evidences receipt on the noted date by the USPTO of the indicated documents, characterized by the applicant, and including page counts, where applicable. It serves as evidence of receipt similar to a Post Card, as described in MPEP 503.

New Applications Under 35 U.S.C. 111

If a new application is being filed and the application includes the necessary components for a filing date (see 37 CFR 1.53(b)-(d) and MPEP 506), a Filing Receipt (37 CFR 1.54) will be issued in due course and the date shown on this Acknowledgement Receipt will establish the filing date of the application.

National Stage of an International Application under 35 U.S.C. 371

If a timely submission to enter the national stage of an international application is compliant with the conditions of 35 U.S.C. 371 and other applicable requirements a Form PCT/DO/EO/903 indicating acceptance of the application as a national stage submission under 35 U.S.C. 371 will be issued in addition to the Filing Receipt, in due course.

New International Application Filed with the USPTO as a Receiving Office

If a new international application is being filed and the international application includes the necessary components for an international filing date (see PCT Article 11 and MPEP 1810), a Notification of the International Application Number and of the International Filing Date (Form PCT/RO/105) will be issued in due course, subject to prescriptions concerning national security, and the date shown on this Acknowledgement Receipt will establish the international filing date of the application.

UNITED STATES DEPARTMENT OF COMMERCE
United States Patent and Trademark Office
Address: COMMISSIONER FOR PATENTS
P.O. Box 1450
Alexandria, Virginia 22313-1450
www.uspto.gov

APPLICATION NO.	FILING DATE	FIRST NAMED INVENTOR	ATTORNEY DOCKET NO.	CONFIRMATION NO.
14/228,057	03/27/2014	Thien Nguyen	INCEP-001COD	1983

138718 7590 01/05/2023

Polsinelli LLP
PO Box 140310
Kansas City, MO 64114-0310

EXAMINER	
APONTE, MIRAYDA ARLENE	

ART UNIT	PAPER NUMBER
3772	

NOTIFICATION DATE	DELIVERY MODE
01/05/2023	ELECTRONIC

Please find below and/or attached an Office communication concerning this application or proceeding.

The time period for reply, if any, is set in the attached communication.

Notice of the Office communication was sent electronically on above-indicated "Notification Date" to the following e-mail address(es):

patentdocketing@polsinelli.com
sfpatent@polsinelli.com

Office Action Summary	Application No. 14/228,057	Applicant(s) Nguyen et al.	
	Examiner MIRAYDA A APONTE	Art Unit 3772	AIA (FITF) Status No

-- The MAILING DATE of this communication appears on the cover sheet with the correspondence address --

Period for Reply

A SHORTENED STATUTORY PERIOD FOR REPLY IS SET TO EXPIRE 3 MONTHS FROM THE MAILING DATE OF THIS COMMUNICATION.

- Extensions of time may be available under the provisions of 37 CFR 1.136(a). In no event, however, may a reply be timely filed after SIX (6) MONTHS from the mailing date of this communication.
- If NO period for reply is specified above, the maximum statutory period will apply and will expire SIX (6) MONTHS from the mailing date of this communication.
- Failure to reply within the set or extended period for reply will, by statute, cause the application to become ABANDONED (35 U.S.C. § 133). Any reply received by the Office later than three months after the mailing date of this communication, even if timely filed, may reduce any earned patent term adjustment. See 37 CFR 1.704(b).

Status

1)☑ Responsive to communication(s) filed on 2 December 2022.

☐ A declaration(s)/affidavit(s) under **37 CFR 1.130(b)** was/were filed on _____.

2a)☑ This action is **FINAL.** 2b) ☐ This action is non-final.

3)☐ An election was made by the applicant in response to a restriction requirement set forth during the interview on _____; the restriction requirement and election have been incorporated into this action.

4)☐ Since this application is in condition for allowance except for formal matters, prosecution as to the merits is closed in accordance with the practice under *Ex parte Quayle*, 1935 C.D. 11, 453 O.G. 213.

Disposition of Claims*

5) ☑ Claim(s) 1-2,4-8,10,14-16 and 21-30 is/are pending in the application.

5a) Of the above claim(s) _____ is/are withdrawn from consideration.

6) ☐ Claim(s) _____ is/are allowed.

7) ☑ Claim(s) 1-2,4-8,10,14-16 and 21-30 is/are rejected.

8) ☐ Claim(s) _____ is/are objected to.

9) ☐ Claim(s) _____ are subject to restriction and/or election requirement

* If any claims have been determined allowable, you may be eligible to benefit from the **Patent Prosecution Highway** program at a participating intellectual property office for the corresponding application. For more information, please see http://www.uspto.gov/patents/init_events/pph/index.jsp or send an inquiry to **PPHfeedback@uspto.gov.**

Application Papers

10)☐ The specification is objected to by the Examiner.

11)☐ The drawing(s) filed on _____ is/are: a)☐ accepted or b)☐ objected to by the Examiner.

Applicant may not request that any objection to the drawing(s) be held in abeyance. See 37 CFR 1.85(a).

Replacement drawing sheet(s) including the correction is required if the drawing(s) is objected to. See 37 CFR 1.121(d).

Priority under 35 U.S.C. § 119

12)☐ Acknowledgment is made of a claim for foreign priority under 35 U.S.C. § 119(a)-(d) or (f).

Certified copies:

a)☐ All b)☐ Some** c)☐ None of the:

1.☐ Certified copies of the priority documents have been received.

2.☐ Certified copies of the priority documents have been received in Application No. _____.

3.☐ Copies of the certified copies of the priority documents have been received in this National Stage application from the International Bureau (PCT Rule 17.2(a)).

** See the attached detailed Office action for a list of the certified copies not received.

Attachment(s)

1) ☐ Notice of References Cited (PTO-892)

2) ☑ Information Disclosure Statement(s) (PTO/SB/08a and/or PTO/SB/08b) Paper No(s)/Mail Date _____.

3) ☐ Interview Summary (PTO-413) Paper No(s)/Mail Date _____.

4) ☐ Other: _____.

DETAILED ACTION

Notice of Pre-AIA or AIA Status

1. The present application is being examined under the pre-AIA first to invent provisions.

Specification

2. The amended specification was received on 2 December 2022. This amended specification is acceptable.

Claim Rejections - 35 USC § 112

3. The following is a quotation of the first paragraph of 35 U.S.C. 112(a):

> (a) IN GENERAL.—The specification shall contain a written description of the invention, and of the manner and process of making and using it, in such full, clear, concise, and exact terms as to enable any person skilled in the art to which it pertains, or with which it is most nearly connected, to make and use the same, and shall set forth the best mode contemplated by the inventor or joint inventor of carrying out the invention.

The following is a quotation of the first paragraph of pre-AIA 35 U.S.C. 112:

> The specification shall contain a written description of the invention, and of the manner and process of making and using it, in such full, clear, concise, and exact terms as to enable any person skilled in the art to which it pertains, or with which it is most nearly connected, to make and use the same, and shall set forth the best mode contemplated by the inventor of carrying out his invention.

4. **Claims 1, 2, 4-8, 10, 14-16 and 21-30** are rejected under 35 U.S.C. 112(a) or 35 U.S.C. 112 (pre-AIA), first paragraph, as failing to comply with the written description requirement. The claims contain subject matter which was not described in the specification in such a way as to reasonably convey to one skilled in the relevant art that the inventor or a joint inventor, or for applications subject to pre-AIA 35 U.S.C. 112, the inventors, at the time the application was filed, had possession of the claimed invention.

5. **Regarding claims 1 and 21,** the claims limit the first wall and the second wall as being defined by one or more edges. However, the specification only describes that each of the first wall and the second wall includes superior and inferior edges (see [0035]). Therefore, the present application does not disclose the option of having a single or **one edge** on each of the first wall and the second wall.

Response to Arguments

6. Applicant's arguments filed 2 December 2022 have been fully considered but they are not persuasive.

7. **Regarding claim 1 and 21** rejection, applicant argues that even when the specification does not specifically describe one edge for the first wall and second wall, the applicant is entitled to claim one or more edges.

8. The Office disagrees, the applicant is entitled to the invention as described in the original specification and the original claims. Any other limitation describing something different is considered new matter.

9. In this case, the applicant is describing in the amended claims that the first wall and the second wall is defined by one or more edges, is indicating that both walls can be defined by one edge. But, the specification as originally filed only discloses that "a set of holes may also form a mesh along the walls of the superior and inferior edges". The Office understands that each wall includes a superior edge and an inferior edge, making the wall to have two edges.

10. Therefore, by describing that each of the walls can have one edge is not found in the present disclosure.

11. Furthermore, the drawings do not provide support for any wall in the device having one edge under the definition given in the specification, that is of walls having a superior and inferior edges as described in paragraph 0035 of the present disclosure.

12. Therefore, it is understood that the rejection is proper and will be maintained.

Conclusion

13. **THIS ACTION IS MADE FINAL.** Applicant is reminded of the extension of time policy as set forth in 37 CFR 1.136(a).

14. A shortened statutory period for reply to this final action is set to expire THREE MONTHS from the mailing date of this action. In the event a first reply is filed within TWO MONTHS of the mailing date of this final action and the advisory action is not mailed until after the end of the THREE-MONTH shortened statutory period, then the shortened statutory period will expire on the date the advisory action is mailed, and any extension fee pursuant to 37 CFR 1.136(a) will be calculated from the mailing date of the advisory action. In no event, however, will the statutory period for reply expire later than SIX MONTHS from the mailing date of this final action.

15. Any inquiry concerning this communication or earlier communications from the examiner should be directed to MIRAYDA ARLENE APONTE whose telephone number is (571)270-1933. The examiner can normally be reached M-F 8-5.

16. Examiner interviews are available via telephone, in-person, and video conferencing using a USPTO supplied web-based collaboration tool. To schedule an interview, applicant is encouraged to use the USPTO Automated Interview Request (AIR) at http://www.uspto.gov/interviewpractice.

17. If attempts to reach the examiner by telephone are unsuccessful, the examiner's supervisor, Cris Rodriguez can be reached on 571-272-4964. The fax phone number for the organization where this application or proceeding is assigned is 571-273-8300.

18. Information regarding the status of published or unpublished applications may be obtained from Patent Center. Unpublished application information in Patent Center is available to registered users. To file and manage patent submissions in Patent Center, visit: https://patentcenter.uspto.gov. Visit https://www.uspto.gov/patents/apply/patent-center for more information about Patent Center and https://www.uspto.gov/patents/docx for information about filing in DOCX format. For additional questions, contact the Electronic Business Center (EBC) at 866-217-9197 (toll-free). If you would like assistance from a USPTO Customer Service Representative, call 800-786-9199 (IN USA OR CANADA) or 571-272-1000.

/MIRAYDA A APONTE/
Examiner, Art Unit 3772

/RALPH A LEWIS/
Primary Examiner, Art Unit 3772

Search Notes	Application/Control No.	Applicant(s)/Patent Under Reexamination
	14/228,057	Nguyen et al.
	Examiner	Art Unit
	MIRAYDA A APONTE	3772

CPC - Searched*		
Symbol	**Date**	**Examiner**
A61C 17/043, 046	11/16/2015	HDM
Updated Search	05/31/2016	HDM
Update Search	09/04/2018	HDM
Update Search	03/18/2019	HDM
Update Search	10/01/2019	HDM
Updated search	08/21/2022	MA
A61C17/08,0208,06,00,02	08/21/2022	MA
A61C5/90	08/21/2022	MA
A61B1/24	08/21/2022	MA
Updated search	12/29/2022	MA

CPC Combination Sets - Searched*		
Symbol	**Date**	**Examiner**

US Classification - Searched*			
Class	**Subclass**	**Date**	**Examiner**
433	91-92, 140	11/16/2015	HDM
	Updated search	08/21/2022	NA
	Updated search	12/29/2022	MA

* See search history printout included with this form or the SEARCH NOTES box below to determine the scope of the search.

/MIRAYDA A APONTE/ Examiner, Art Unit 3772	

Search Notes	Application/Control No.	Applicant(s)/Patent Under Reexamination
	14/228,057	Nguyen et al.
	Examiner	Art Unit
	MIRAYDA A APONTE	3772

Search Notes		
Search Notes	**Date**	**Examiner**
Inventor Search	11/16/2015	HDM
Review searches of parent case 14/100323	11/16/2015	HDM
Updated Search	05/31/2016	HDM
Update Search	04/03/2017	HDM
Update Search	10/30/2017	HDM
Update Search	09/04/2018	HDM
Update Search	03/18/2019	HDM
Update Search	10/01/2019	HDM
Update Search	05/11/2020	HDM
Update Search	05/03/2021	HDM
Update Search	11/06/2021	HDM
PE2ESearch	08/21/2022	MA
Word search on retractor, tongue, (suction vacuum) AND (tongue retract*), (suction vacuum), dental AND cheek WITH retractor AND suction, cheek WITH retractor AND suction	08/21/2022	MA
Back and fourth search	08/21/2022	MA
EPO search	08/21/2022	MA
Updated word search	12/29/2022	MA

Interference Search			
US Class/CPC Symbol	**US Subclass/CPC Group**	**Date**	**Examiner**

/MIRAYDA A APONTE/ Examiner, Art Unit 3772	

Index of Claims	Application/Control No.	Applicant(s)/Patent Under Reexamination
	14/228,057	Nguyen et al.
	Examiner	Art Unit
	MIRAYDA A APONTE	3772

✓	Rejected	-	Cancelled	N	Non-Elected	A	Appeal
=	Allowed	÷	Restricted	I	Interference	O	Objected

CLAIMS

☐ Claims renumbered in the same order as presented by applicant ☐ CPA ☐ T.D. ☐ R.1.47

CLAIM		DATE								
Final	Original	11/06/2021	08/21/2022	12/29/2022						
	1	✓	✓	✓						
	2	✓	✓	✓						
	3	-	-	-						
	4	✓	✓	✓						
	5	✓	✓	✓						
	6	✓	✓	✓						
	7	✓	✓	✓						
	8	✓	✓	✓						
	9	-	-	-						
	10	✓	✓	✓						
	11	-	-	-						
	12	-	-	-						
	13	-	-	-						
	14	✓	✓	✓						
	15	✓	✓	✓						
	16	✓	✓	✓						
	17	-	-	-						
	18	-	-	-						
	19	-	-	-						
	20	-	-	-						
	21	✓	✓	✓						
	22	✓	✓	✓						
	23	✓	✓	✓						
	24	✓	✓	✓						
	25	✓	✓	✓						
	26	✓	✓	✓						
	27	✓	✓	✓						
	28	✓	✓	✓						
	29	✓	✓	✓						
	30	✓	✓	✓						

Substitute for Form 1449/PTO

INFORMATION DISCLOSURE STATEMENT BY APPLICANT

(use as many sheets as necessary)

Complete if Known	
Application Number	14/228,057
Filing Date	March 27, 2014
First Named Inventor:	Thien Nguyen
Art Unit	3772
Examiner Name	Mirayda A. Aponte
Attorney Docket Number	INCEP-001COD

Sheet	1	of	1

U.S. PATENT DOCUMENTS

Examiner Initials*	Cite No.'	Document Number Number-Kind Code[2](If known)		Publication Date MM-DD-YYYY	Name of Patentee or Applicant of Cited Document	Pages, Columns, Lines, Where Relevant Passages or Relevant Figures Appear
		US-	D962,438	8/30/2022	Nguyen	
		US-	D962,439	8/30/2022	Nguyen	
		US-				
		US-				
		US-				
		US-				
		US-				
		US-				
		US-				
		US-				
		US-				
		US-				
		US-				
		US-				
		US-				

FOREIGN PATENT DOCUMENTS

Examiner Initials*	Cite No.'	Foreign Patent Document Country Code[3] Number[4] Kind Codes (if known)	Publication Date MM-DD-YYYY	Name of Patentee or Applicant of Cited Document	Pages, Columns, Lines, Where Relevant Passages or Relevant Figures Appear	T6

Examiner Signature	/MIRAYDA A APONTE/	Date Considered	12/29/2022

*EXAMINER: Initial if reference considered, whether or not citation is in conformance with MPEP 609; Draw line through citation if not in conformance and not considered. Include copy of this form with next communication to applicant. 'Applicant's unique citation designation number (optional). [2]See Kinds Codes of USPTO Patent Documents at www.uspto.gov or MPEP 901.04. [3]Enter Office that issued the document, by the two-letter code (WIPO Standard ST.3). [4]For Japanese patent documents, the indication of the year of reign of the Emperor must precede the serial number of the patent document. [5]Kind of document by the appropriate symbols as indicated on the document under WIPO Standard ST. 16 if possible. [6]Applicant is to place a check mark here if English language translation is attached.

This collection of information is required by 37 CFR 1.97 and 1.98. The information is required to obtain or retain a benefit by the public which is to file (and by the USPTO to process) an application. Confidentiality is governed by 35 U.S.C. 122 and 37 CFR 1.14. This collection is estimated to take 2 hours to complete including gathering, preparing, and submitting the completed application form to the USPTO. Time will vary depending upon the individual case. Any comments on the amount of time you require to complete this form and/or suggestions for reducing this burden, should be sent to the Chief Information Officer, U.S. Patent and Trademark Office, P.O. Box 1450, Alexandria, VA 22313-1450. DO NOT SENT FEES OR COMPLETED FORMS TO THIS ADDRESS. **SEND TO: Commissioner for Patents, P.O. Box 1450, Alexandria, Virginia 22313-1450.**

If you need assistance in completing the form, call 1-800-PTO-9199 (1-800-786-9199) and select option 2.

Based on Form PTO/SB/08A (08-03)

ALL REFERENCES CONSIDERED EXCEPT WHERE LINED THROUGH. /M.A.A/

Substitute for Form 1449/PTO

INFORMATION DISCLOSURE STATEMENT BY APPLICANT

(use as many sheets as necessary)

Complete if Known	
Application Number	14/228,057
Filing Date	March 27, 2014
First Named Inventor:	Thien Nguyen
Art Unit	3772
Examiner Name	Mirayda A. Aponte
Attorney Docket Number	INCEP-001COD

Sheet	1	of	1

U.S. PATENT DOCUMENTS

Examiner Initials*	Cite No.'	Document Number Number-Kind Code[2](If known)	Publication Date MM-DD-YYYY	Name of Patentee or Applicant of Cited Document	Pages, Columns, Lines, Where Relevant Passages or Relevant Figures Appear
		US-			
		US-			
		US-			
		US-			
		US-			
		US-			
		US-			
		US-			
		US-			
		US-			
		US-			
		US-			
		US-			
		US-			
		US-			

FOREIGN PATENT DOCUMENTS

Examiner Initials*	Cite No.'	Foreign Patent Document Country Code[3] Number[4] Kind Codes (if known)	Publication Date MM-DD-YYYY	Name of Patentee or Applicant of Cited Document	Pages, Columns, Lines, Where Relevant Passages or Relevant Figures Appear	T6
		JP 2022-533276	7/21/2022	Dryshield, LLC		

Examiner Signature	/MIRAYDA A APONTE/	Date Considered	12/29/2022

*EXAMINER: Initial if reference considered, whether or not citation is in conformance with MPEP 609; Draw line through citation if not in conformance and not considered. Include copy of this form with next communication to applicant. 'Applicant's unique citation designation number (optional). [2]See Kinds Codes of USPTO Patent Documents at www.uspto.gov or MPEP 901.04. [3]Enter Office that issued the document, by the two-letter code (WIPO Standard ST.3). [4]For Japanese patent documents, the indication of the year of reign of the Emperor must precede the serial number of the patent document. [5]Kind of document by the appropriate symbols as indicated on the document under WIPO Standard ST. 16 if possible. [6]Applicant is to place a check mark here if English language translation is attached.

This collection of information is required by 37 CFR 1.97 and 1.98. The information is required to obtain or retain a benefit by the public which is to file (and by the USPTO to process) an application. Confidentiality is governed by 35 U.S.C. 122 and 37 CFR 1.14. This collection is estimated to take 2 hours to complete including gathering, preparing, and submitting the completed application form to the USPTO. Time will vary depending upon the individual case. Any comments on the amount of time you require to complete this form and/or suggestions for reducing this burden, should be sent to the Chief Information Officer, U.S. Patent and Trademark Office, P.O. Box 1450, Alexandria, VA 22313-1450. DO NOT SENT FEES OR COMPLETED FORMS TO THIS ADDRESS. **SEND TO: Commissioner for Patents, P.O. Box 1450, Alexandria, Virginia 22313-1450.**

If you need assistance in completing the form, call 1-800-PTO-9199 (1-800-786-9199) and select option 2.

Based on Form PTO/SB/08A (08-03)

ALL REFERENCES CONSIDERED EXCEPT WHERE LINED THROUGH. /M.A.A/

PE2E SEARCH - Search History (Prior Art)

Ref #	Hits	Search Query	DBs	Default Operator	Plurals	British Equivalents	Time Stamp
L40	2	(D962438 D965439).did.	(US-PGPUB; USPAT; USOCR; FIT (CN, FR, WO); FPRS; EPO; JPO; DERWENT; IBM_TDB)	OR	ON	ON	2022/12/29 06:14 AM
L41	2	(D962438 D962439).did.	(US-PGPUB; USPAT; USOCR; FIT (CN, FR, WO); FPRS; EPO; JPO; DERWENT; IBM_TDB)	OR	ON	ON	2022/12/29 06:15 AM
L42	1	("2022533276").did.	(US-PGPUB; USPAT; USOCR; FIT (CN, FR, WO); FPRS; EPO; JPO; DERWENT; IBM_TDB)	OR	ON	ON	2022/12/29 06:16 AM
L43	2066	(A61C17/043 OR A61C17/046).cpc. OR (433/91-92,140).ccls.	(US-PGPUB; USPAT; USOCR; FIT (CN, FR, WO); FPRS; EPO; JPO; DERWENT; IBM_TDB)	OR	ON	ON	2022/12/29 06:19 AM
L44	50	L43 AND cheek WITH retractor AND suction	(US-PGPUB; USPAT; USOCR; FIT (CN, FR, WO); FPRS; EPO; JPO; DERWENT; IBM_TDB)	OR	ON	ON	2022/12/29 06:23 AM
L45	83	L43 AND retractor AND suction	(US-PGPUB; USPAT; USOCR; FIT (CN, FR, WO); FPRS; EPO; JPO; DERWENT; IBM_TDB)	OR	ON	ON	2022/12/29 06:24 AM
L46	98	L43 AND retractor AND (suction vacuum)	(US-PGPUB; USPAT; USOCR; FIT (CN, FR, WO); FPRS; EPO; JPO; DERWENT; IBM_TDB)	OR	ON	ON	2022/12/29 08:18 AM
L47	308	L43 AND (suction vacuum) AND (tongue retract*)	(US-PGPUB; USPAT; USOCR; FIT (CN, FR, WO); FPRS; EPO; JPO; DERWENT; IBM_TDB)	OR	ON	ON	2022/12/29 08:19 AM
L48	15919	(A61C17/043 OR A61C17/046 OR A61C5/90 OR A61B1/24 OR A61C17/08).cpc.	(US-PGPUB; USPAT; USOCR; FIT (CN, FR, WO); FPRS; EPO; JPO; DERWENT; IBM_TDB)	OR	ON	ON	2022/12/29 08:45 AM
L49	24458	(A61C17/043 OR A61C17/046 OR A61C5/90 OR A61B1/24 OR A61C17/08 OR	(US-PGPUB; USPAT; USOCR; FIT (CN, FR, WO); FPRS; EPO; JPO; DERWENT; IBM_TDB)	OR	ON	ON	2022/12/29 08:46 AM

		A61C17/08 OR A61C17/0208 OR A61C17/06 OR A61C17/00 OR A61C17/02).cpc. OR (433/93).ccls.					
L50	1926	L49 AND (suction vacuum) AND (tongue retract*)	(US-PGPUB; USPAT; USOCR; FIT (CN, FR, WO); FPRS; EPO; JPO; DERWENT; IBM_TDB)	OR	ON	ON	2022/12/29 08:46 AM

PE2E SEARCH - Search History (Interference)

There are no Interference searches to show.

Substitute for Form 1449/PTO

INFORMATION DISCLOSURE STATEMENT BY APPLICANT

(use as many sheets as necessary)

Complete if Known	
Application Number	14/228,057
Filing Date	March 27, 2014
First Named Inventor:	Thien Nguyen
Art Unit	3772
Examiner Name	Mirayda A. Aponte
Attorney Docket Number	INCEP-001COD

Sheet	1	of	2

U.S. PATENT DOCUMENTS

Examiner Initials*	Cite No.'	Document Number Number-Kind Code[2](If known)		Publication Date MM-DD-YYYY	Name of Patentee or Applicant of Cited Document	Pages, Columns, Lines, Where Relevant Passages or Relevant Figures Appear
		US-	11,576,764	2/14/2023	Nguyen	
		US-	11,589,969	2/28/2023	Nguyen	
		US-	11,589,970	2/28/2023	Nguyen	
		US-	2022/0378563	12/1/2022	Cao et al.	
		US-				
		US-				
		US-				
		US-				
		US-				
		US-				
		US-				
		US-				

FOREIGN PATENT DOCUMENTS

Examiner Initials*	Cite No.'	Foreign Patent Document Country Code[3] Number[4] Kind Codes (if known)	Publication Date MM-DD-YYYY	Name of Patentee or Applicant of Cited Document	Pages, Columns, Lines, Where Relevant Passages or Relevant Figures Appear	T6

Examiner Signature		Date Considered	

*EXAMINER: Initial if reference considered, whether or not citation is in conformance with MPEP 609; Draw line through citation if not in conformance and not considered. Include copy of this form with next communication to applicant. 'Applicant's unique citation designation number (optional). [2]See Kinds Codes of USPTO Patent Documents at www.uspto.gov or MPEP 901.04. [3]Enter Office that issued the document, by the two-letter code (WIPO Standard ST.3). [4]For Japanese patent documents, the indication of the year of reign of the Emperor must precede the serial number of the patent document. [5]Kind of document by the appropriate symbols as indicated on the document under WIPO Standard ST. 16 if possible. [6]Applicant is to place a check mark here if English language translation is attached.

This collection of information is required by 37 CFR 1.97 and 1.98. The information is required to obtain or retain a benefit by the public which is to file (and by the USPTO to process) an application. Confidentiality is governed by 35 U.S.C. 122 and 37 CFR 1.14. This collection is estimated to take 2 hours to complete including gathering, preparing, and submitting the completed application form to the USPTO. Time will vary depending upon the individual case. Any comments on the amount of time you require to complete this form and/or suggestions for reducing this burden, should be sent to the Chief Information Officer, U.S. Patent and Trademark Office, P.O. Box 1450, Alexandria, VA 22313-1450. DO NOT SENT FEES OR COMPLETED FORMS TO THIS ADDRESS. **SEND TO: Commissioner for Patents, P.O. Box 1450, Alexandria, Virginia 22313-1450.**

If you need assistance in completing the form, call 1-800-PTO-9199 (1-800-786-9199) and select option 2.

Based on Form PTO/SB/08A (08-03)

Substitute for Form 1449/PTO	*Complete if Known*	
INFORMATION DISCLOSURE STATEMENT BY APPLICANT *(use as many sheets as necessary)*	Application Number	14/228,057
	Filing Date	March 27, 2014
	First Named Inventor:	Thien Nguyen
	Art Unit	3772
	Examiner Name	Mirayda A. Aponte
Sheet 2 **of** 2	Attorney Docket Number	INCEP-001COD

NON PATENT LITERATURE DOCUMENTS

Examiner Initials*	Cite No'	Include name of the author (in CAPITAL LETTERS), title of the article (when appropriate), title of the item (book, magazine, journal, serial, symposium, catalog, etc.), date, page(s), volume-issue number(s), publisher, city and/or country where published	T^2
		Docket No. INCEP-005 U.S. Patent Application 16/870,745 Office Action mailed 2/17/23	

Examiner Signature		Date Considered	

*Examiner: Initial if reference considered, whether or not citation is in conformance with MPEP 609. Draw line through citation if not in conformance and not considered. Include copy of this form with next communication to applicant.

'Applicant's unique citation designation number (optional). 'Applicant is to place a check mark here if English Translation is attached.

This collection of information is required by 37 CFR 1.98. The information is required to obtain or retain a benefit by the public which is to file (and by the USPTO to process) an application. Confidentiality is governed by 35 U.S.C. 122 and 37 CFR 1.14. This collection is estimated to take 2 hours to complete including gathering, preparing, and submitting the completed application form to the USPTO. Time will vary depending upon the individual case. Any comments on the amount of time you require to complete this form and/or suggestions for reducing this burden, should be sent to the Chief Information Officer, U.S. Patent and Trademark Office, P.O. Box 1450, Alexandria, VA 22313-1450. DO NOT SENT FEES OR COMPLETED FORMS TO THIS ADDRESS. **SEND TO: Commissioner for Patents, P.O. Box 1450, Alexandria, Virginia 22313-1450.**

If you need assistance in completing the form, call 1-800-PTO-9199 (1-800-786-9199) and select option 2.

Electronic Acknowledgement Receipt

EFS ID:	47683177
Application Number:	14228057
International Application Number:	
Confirmation Number:	1983
Title of Invention:	INTRAORAL DEVICE WITH SLIT
First Named Inventor/Applicant Name:	Thien Nguyen
Customer Number:	138718
Filer:	Ruby Lim Chung/Lea Fong
Filer Authorized By:	Ruby Lim Chung
Attorney Docket Number:	INCEP-001COD
Receipt Date:	16-MAR-2023
Filing Date:	27-MAR-2014
Time Stamp:	19:02:16
Application Type:	Utility under 35 USC 111(a)

Payment information:

Submitted with Payment	no

File Listing:

Document Number	Document Description	File Name	File Size(Bytes)/ Message Digest	Multi Part /.zip	Pages (if appl.)
1	Transmittal Letter	INCEP-001COD_IDS_Statement_3-15-23.pdf	97264 51136fcb366ad47c8d12ae68627f3ce51c0be218	no	2

Warnings:

Information:					
2	Information Disclosure Statement (IDS) Form (SB08)	INCEP-001COD_IDS_1449_3-15-23.pdf	222453 9b9553359a6a034b07dc746dad65f6a37affc54c	no	2
Warnings:					
Information:					
This is not an USPTO supplied IDS fillable form					
			Total Files Size (in bytes):	319717	

This Acknowledgement Receipt evidences receipt on the noted date by the USPTO of the indicated documents, characterized by the applicant, and including page counts, where applicable. It serves as evidence of receipt similar to a Post Card, as described in MPEP 503.

New Applications Under 35 U.S.C. 111

If a new application is being filed and the application includes the necessary components for a filing date (see 37 CFR 1.53(b)-(d) and MPEP 506), a Filing Receipt (37 CFR 1.54) will be issued in due course and the date shown on this Acknowledgement Receipt will establish the filing date of the application.

National Stage of an International Application under 35 U.S.C. 371

If a timely submission to enter the national stage of an international application is compliant with the conditions of 35 U.S.C. 371 and other applicable requirements a Form PCT/DO/EO/903 indicating acceptance of the application as a national stage submission under 35 U.S.C. 371 will be issued in addition to the Filing Receipt, in due course.

New International Application Filed with the USPTO as a Receiving Office

If a new international application is being filed and the international application includes the necessary components for an international filing date (see PCT Article 11 and MPEP 1810), a Notification of the International Application Number and of the International Filing Date (Form PCT/RO/105) will be issued in due course, subject to prescriptions concerning national security, and the date shown on this Acknowledgement Receipt will establish the international filing date of the application.

IN THE UNITED STATES PATENT AND TRADEMARK OFFICE

Group Art Unit: 3772 | Examiner: Mirayda A. Aponte

Serial No.: 14/228,057 | Filed: March 27, 2014

In re Application of: Thien Nguyen

Confirmation No.: 1983 | Customer No.: 138718

Title: INTRAORAL DEVICE WITH SLIT

SUPPLEMENTAL INFORMATION DISCLOSURE STATEMENT
Under 37 C.F.R. § 1.56 and 1.97-1.98

Examiner:

Pursuant to the provisions of 37 C.F.R. §§ 1.56 and 1.97-98 of the Rules of Practice in Patent Cases, enclosed herewith is form PTO-SB-08, listing several references. The Examiner is requested to make these references of official record in the application.

The references cited may be material to examination of the application and are submitted in compliance with the Applicant's duty of disclosure as defined by 37 C.F.R. § 1.56.

Applicants hereby declare, pursuant to 37 C.F.R. §1.97(e)(2), that no item of information contained in the information disclosure statement was cited in a communication from a foreign patent office in a counterpart foreign application and, to the knowledge of the person signing the certification after having made a reasonable inquiry, no item of information contained in the information disclosure statement was

known to any individual designated in 37 C.F.R. §1.56(c) more than three months prior to the filing of the information disclosure statement.

No representation is made or intended as to the completeness of this list, nor is the inclusion of any reference an admission that it is prior art or pertinent to this application.

Respectfully submitted,
POLSINELLI LLP

Dated: March 15, 2023

By: _____/Ruby L. Chung/_____
Ruby L. Chung (Reg. No. 76,809)
Polsinelli LLP
Three Embarcadero Center, Suite 2400
San Francisco, CA 94111
415-248-2100 (Main)
patentdocketing@polsinelli.com

PTO/SB/06 (09-11)
Approved for use through 1/31/2014. OMB 0651-0032
U.S. Patent and Trademark Office; U.S. DEPARTMENT OF COMMERCE
Under the Paperwork Reduction Act of 1995, no persons are required to respond to a collection of information unless it displays a valid OMB control number.

PATENT APPLICATION FEE DETERMINATION RECORD Substitute for Form PTO-875	Application or Docket Number 14/228,057	Filing Date 03/27/2014	☐ To be Mailed

ENTITY: ☐ LARGE ☑ SMALL ☐ MICRO

APPLICATION AS FILED - PART I

FOR	(Column 1) NUMBER FILED	(Column 2) NUMBER EXTRA		RATE ($)	FEE ($)
☐ BASIC FEE (37 CFR 1.16(a), (b), or (c))	N/A	N/A		N/A	
☐ SEARCH FEE (37 CFR 1.16(k), (i), or (m))	N/A	N/A		N/A	
☐ EXAMINATION FEE (37 CFR 1.16(o), (p), or (q))	N/A	N/A		N/A	
TOTAL CLAIMS (37 CFR 1.16(i))	minus 20 =	*		x $40 =	
INDEPENDENT CLAIMS (37 CFR 1.16(h))	minus 3 =	*		x $210 =	
☐ APPLICATION SIZE FEE (37 CFR 1.16(s))	If the specification and drawings exceed 100 sheets of paper, the application size fee due is $310 ($155 for small entity) for each additional 50 sheets or fraction thereof. See 35 U.S.C. 41(a)(1)(G) and 37 CFR 1.16(s).				
☐ MULTIPLE DEPENDENT CLAIM PRESENT (37 CFR 1.16(j))					
* If the difference in column 1 is less than zero, enter "0" in column 2.				TOTAL	

APPLICATION AS AMENDED - PART II

		(Column 1)		(Column 2)	(Column 3)			
AMENDMENT	03/31/2023	CLAIMS REMAINING AFTER AMENDMENT		HIGHEST NUMBER PREVIOUSLY PAID FOR	PRESENT EXTRA		RATE ($)	ADDITIONAL FEE ($)
	Total (37 CFR 1.16(i))	* 23	Minus	** 21	= 2		x $40 =	80
	Independent (37 CFR 1.16(h))	* 2	Minus	*** 3	= 0		x $192 =	0
	☐ Application Size Fee (37 CFR 1.16(s))							
	☐ FIRST PRESENTATION OF MULTIPLE DEPENDENT CLAIM (37 CFR 1.16(j))							
							TOTAL ADD'L FEE	80

		(Column 1)		(Column 2)	(Column 3)			
AMENDMENT		CLAIMS REMAINING AFTER AMENDMENT		HIGHEST NUMBER PREVIOUSLY PAID FOR	PRESENT EXTRA		RATE ($)	ADDITIONAL FEE ($)
	Total (37 CFR 1.16(i))	*	Minus	**	=		x $0 =	
	Independent (37 CFR 1.16(h))	*	Minus	***	=		x $0 =	
	☐ Application Size Fee (37 CFR 1.16(s))							
	☐ FIRST PRESENTATION OF MULTIPLE DEPENDENT CLAIM (37 CFR 1.16(j))							
							TOTAL ADD'L FEE	

* If the entry in column 1 is less than the entry in column 2, write "0" in column 3.	LIE
** If the "Highest Number Previously Paid For" IN THIS SPACE is less than 20, enter "20".	/JACQUELYN L WILLIAMS/
*** If the "Highest Number Previously Paid For" IN THIS SPACE is less than 3, enter "3".	
The "Highest Number Previously Paid For" (Total or Independent) is the highest number found in the appropriate box in column 1.	

This collection of information is required by 37 CFR 1.16. The information is required to obtain or retain a benefit by the public which is to file (and by the USPTO to process) an application. Confidentiality is governed by 35 U.S.C. 122 and 37 CFR 1.14. This collection is estimated to take 12 minutes to complete, including gathering, preparing, and submitting the completed application form to the USPTO. Time will vary depending upon the individual case. Any comments on the amount of time you require to complete this form and/or suggestions for reducing this burden, should be sent to the Chief Information Officer, U.S. Patent and Trademark Office, U.S. Department of Commerce, P.O. Box 1450, Alexandria, VA 22313-1450. DO NOT SEND FEES OR COMPLETED FORMS TO THIS ADDRESS. **SEND TO: Commissioner for Patents, P.O. Box 1450, Alexandria, VA 22313-1450.**

If you need assistance in completing the form, call 1-800-PTO-9199 and select option 2.

Doc Code: A.NE.AFCP
Document Description: After Final Consideration Pilot Program Request

PTO/SB/434 (05-13)

CERTIFICATION AND REQUEST FOR CONSIDERATION UNDER THE AFTER FINAL CONSIDERATION PILOT PROGRAM 2.0

Practitioner Docket No.:	Application No.:	Filing Date:
INCEP-001COD	14/228,057	03-27-2014
First Named Inventor:	**Title:**	
Thien Nguyen	INTRAORAL DEVICE	

APPLICANT HEREBY CERTIFIES THE FOLLOWING AND REQUESTS CONSIDERATION UNDER THE AFTER FINAL CONSIDERATION PILOT PROGRAM 2.0 (AFCP 2.0) OF THE ACCOMPANYING RESPONSE UNDER 37 CFR 1.116.

1. The above-identified application is (i) an original utility, plant, or design nonprovisional application filed under 35 U.S.C. 111(a) [a continuing application (*e.g.*, a continuation or divisional application) is filed under 35 U.S.C. 111(a) and is eligible under (i)], or (ii) an international application that has entered the national stage in compliance with 35 U.S.C. 371(c).
2. The above-identified application contains an outstanding final rejection.
3. Submitted herewith is a response under 37 CFR 1.116 to the outstanding final rejection. The response includes an amendment to at least one independent claim, and the amendment does not broaden the scope of the independent claim in any aspect.
4. This certification and request for consideration under AFCP 2.0 is the only AFCP 2.0 certification and request filed in response to the outstanding final rejection.
5. Applicant is willing and available to participate in any interview requested by the examiner concerning the present response.
6. This certification and request is being filed electronically using the Office's electronic filing system (EFS-Web).
7. Any fees that would be necessary consistent with current practice concerning responses after final rejection under 37 CFR 1.116, *e.g.*, extension of time fees, are being concurrently filed herewith. [There is no additional fee required to request consideration under AFCP 2.0.]
8. By filing this certification and request, applicant acknowledges the following:
   - Reissue applications and reexamination proceedings are not eligible to participate in AFCP 2.0.
   - The examiner will verify that the AFCP 2.0 submission is compliant, *i.e.*, that the requirements of the program have been met (see items 1 to 7 above). For compliant submissions:
     - The examiner will review the response under 37 CFR 1.116 to determine if additional search and/or consideration (i) is necessitated by the amendment and (ii) could be completed within the time allotted under AFCP 2.0. If additional search and/or consideration is required but cannot be completed within the allotted time, the examiner will process the submission consistent with current practice concerning responses after final rejection under 37 CFR 1.116, *e.g.*, by mailing an advisory action.
     - If the examiner determines that the amendment does not necessitate additional search and/or consideration, or if the examiner determines that additional search and/or consideration is required and could be completed within the allotted time, then the examiner will consider whether the amendment places the application in condition for allowance (after completing the additional search and/or consideration, if required). If the examiner determines that the amendment does not place the application in condition for allowance, then the examiner will contact the applicant and request an interview.
       - The interview will be conducted by the examiner, and if the examiner does not have negotiation authority, a primary examiner and/or supervisory patent examiner will also participate.
       - If the applicant declines the interview, or if the interview cannot be scheduled within ten (10) calendar days from the date that the examiner first contacts the applicant, then the examiner will proceed consistent with current practice concerning responses after final rejection under 37 CFR 1.116.

Signature	Date
/Tam Thanh Pham/	March 31, 2023
Name (Print/Typed) Tam Thanh Pham	**Practitioner Registration No.** 50565

Note: *This form must be signed in accordance with 37 CFR 1.33. See 37 CFR 1.4(d) for signature requirements and certifications. Submit multiple forms if more than one signature is required, see below*.*

☐ * Total of _____ forms are submitted.

Privacy Act Statement

The **Privacy Act of 1974 (P.L. 93-579)** requires that you be given certain information in connection with your submission of the attached form related to a patent application or patent. Accordingly, pursuant to the requirements of the Act, please be advised that: (1) the general authority for the collection of this information is 35 U.S.C. 2(b)(2); (2) furnishing of the information solicited is voluntary; and (3) the principal purpose for which the information is used by the U.S. Patent and Trademark Office is to process and/or examine your submission related to a patent application or patent. If you do not furnish the requested information, the U.S. Patent and Trademark Office may not be able to process and/or examine your submission, which may result in termination of proceedings or abandonment of the application or expiration of the patent.

The information provided by you in this form will be subject to the following routine uses:

1. The information on this form will be treated confidentially to the extent allowed under the Freedom of Information Act (5 U.S.C. 552) and the Privacy Act (5 U.S.C 552a). Records from this system of records may be disclosed to the Department of Justice to determine whether disclosure of these records is required by the Freedom of Information Act.
2. A record from this system of records may be disclosed, as a routine use, in the course of presenting evidence to a court, magistrate, or administrative tribunal, including disclosures to opposing counsel in the course of settlement negotiations.
3. A record in this system of records may be disclosed, as a routine use, to a Member of Congress submitting a request involving an individual, to whom the record pertains, when the individual has requested assistance from the Member with respect to the subject matter of the record.
4. A record in this system of records may be disclosed, as a routine use, to a contractor of the Agency having need for the information in order to perform a contract. Recipients of information shall be required to comply with the requirements of the Privacy Act of 1974, as amended, pursuant to 5 U.S.C. 552a(m).
5. A record related to an International Application filed under the Patent Cooperation Treaty in this system of records may be disclosed, as a routine use, to the International Bureau of the World Intellectual Property Organization, pursuant to the Patent Cooperation Treaty.
6. A record in this system of records may be disclosed, as a routine use, to another federal agency for purposes of National Security review (35 U.S.C. 181) and for review pursuant to the Atomic Energy Act (42 U.S.C. 218(c)).
7. A record from this system of records may be disclosed, as a routine use, to the Administrator, General Services, or his/her designee, during an inspection of records conducted by GSA as part of that agency's responsibility to recommend improvements in records management practices and programs, under authority of 44 U.S.C. 2904 and 2906. Such disclosure shall be made in accordance with the GSA regulations governing inspection of records for this purpose, and any other relevant (*i.e.*, GSA or Commerce) directive. Such disclosure shall not be used to make determinations about individuals.
8. A record from this system of records may be disclosed, as a routine use, to the public after either publication of the application pursuant to 35 U.S.C. 122(b) or issuance of a patent pursuant to 35 U.S.C. 151. Further, a record may be disclosed, subject to the limitations of 37 CFR 1.14, as a routine use, to the public if the record was filed in an application which became abandoned or in which the proceedings were terminated and which application is referenced by either a published application, an application open to public inspection or an issued patent.
9. A record from this system of records may be disclosed, as a routine use, to a Federal, State, or local law enforcement agency, if the USPTO becomes aware of a violation or potential violation of law or regulation.

IN THE UNITED STATES PATENT AND TRADEMARK OFFICE

APPLICANT:	Solmetex, LLC
INVENTOR(S):	Thien Nguyen, et al.
APPLICATION NO.:	14/228,057
FILED:	March 27, 2014
TITLE:	INTRAORAL DEVICE (as amended)
EXAMINER:	Mirayda Arlene Aponte
ART UNIT:	3772
CONF. NO.:	1983
ATTY.DKT.NO.:	INCEP-001COD

MAIL STOP AF
COMMISSIONER FOR PATENTS
P.O. BOX 1450
ALEXANDRIA, VA 22313-1450

RESPONSE and

After Final Consideration Pilot Request

Examiner Aponte:

In response to the office action mailed January 5, 2023 (*Office Action*), please consider the following amendments and remarks. Amendments to the specification begins on page two, claims begin on page three, and remarks begin on page nine.

IN THE SPECIFICATION

PLEASE AMEND THE TITLE AS FOLLOWS:

INTRAORAL DEVICE ~~WITH SLIT~~

IN THE CLAIMS

PLEASE AMEND THE CLAIMS AS FOLLOWS:

1. (currently amended) A mouthpiece comprising:

a main body having a first end opposite a second end, the main body having an interior space, wherein the main body is configured in a shape wider at the first end and narrower at the second end, and wherein the main body comprises:

a first wall defined by ~~one or more~~ a plurality of first edges, the first wall comprising a slit opening extending a longitudinal length parallel to a longitudinal and central axis of the main body, the longitudinal length extending from a middle location of the first wall away from the first end and toward the second end of the main body, the slit opening allowing fluids exterior to the interior space to enter along the longitudinal length into the interior space,

a second wall defined by ~~one or more~~ a plurality of second edges that correspond to the ~~one or more~~ first edges of the first wall, the second wall located at a distance from the first wall, the distance corresponding to a span of the interior space,

a connecting wall that connects [[the]] one ~~or more~~ of the first edges of the first wall to one of the corresponding second edges of the second wall across the span of the interior space between the first wall and the second wall, and

a bridge structure that includes a plurality of protrusions integral with and protruding from an interior surface of the second wall, the bridge structure extending through the interior space towards the first wall, wherein the bridge structure is not attached to the first wall, and wherein the plurality of protrusions of the bridge structure protrude in a wave shape comprising one or more crests and one or more troughs.

2. (previously presented) The mouthpiece of claim 1, wherein the second wall further includes a stability bar protruding from the interior surface of the second wall and along the longitudinal and central axis of the main body, the stability bar aligned with the slit opening.

3. (cancelled)

4. (previously presented) The mouthpiece of claim 1, wherein the main body is formed by injection-molding as one piece.

5. (previously presented) The mouthpiece of claim 1, wherein a material used to form the main body is a flexible, translucent, high heat-resistant, autoclavable silicone-based material.

6. (previously presented) The mouthpiece of claim 1, wherein the first wall and the second wall have different thicknesses.

7. (previously presented) The mouthpiece of claim 1, wherein flexibility of material of the first wall allows portions of the first wall to be pulled open at the slit opening to expose the interior space.

8. (previously presented) The mouthpiece of claim 1, further comprising a cheek retractor portion connected to the second end of the main body, the cheek retractor portion having a surface that applies pressure when bent, wherein the pressure is based on resilience of the cheek retractor portion.

9. (cancelled)

10. (previously presented) The mouthpiece of claim 1, wherein the plurality of protrusions of the bridge structure comprise a plurality of spaced contact points, and wherein spaces between the contact points are at troughs of the wave shape.

11. – 13. (cancelled)

14. (previously presented) The mouthpiece of claim 1, further comprising a suction connector portion configured to connect the interior space to a vacuum source.

15. (previously presented) The mouthpiece of claim 1, further comprising a mouth prop injection-molded in one piece.

16. (previously presented) The mouthpiece of claim 15, wherein the mouth prop is detachable and comprises a bite block portion and a strap portion.

17. - 20. (cancelled)

21. (currently amended) A mouthpiece comprising:

a main body having a first end opposite a second end, the first end wider than the second end, the main body comprising:

a first wall having a plurality of first edges and extending from the first end to the second end,

a second wall having a plurality of second edges and located at a distance from the first wall, the distance corresponding to a space between the first wall and the second wall, wherein the second wall also extends from the first end to the second end,

a connecting wall that connects one ~~or more~~ of the first edges of the first wall to one ~~or more corresponding~~ of the second edges of the second wall across the distance between the first wall and the second wall; and

a bridge structure that includes a plurality of protrusions integral with and protruding from an interior surface of the second wall, the bridge structure extending through the interior space towards the first wall, wherein the bridge structure is not attached to the first wall, and wherein the plurality of protrusions of the bridge structure protrude in a wave shape comprising one or more crests and one or more troughs;

a suction connector extending from the first end of the main body, wherein an evacuation conduit of the suction connector is in communication with the space between the first wall and the second wall, and wherein the suction connector includes a cutout shape configured to interlock with a corresponding protrusion shape of a vacuum adapter; and

a cheek retractor at the second end of the main body.

22. (previously presented) The mouthpiece of claim 21, wherein the plurality of protrusions of the bridge structure comprise a plurality of contact points corresponding to the crests of the wave shape, and wherein the troughs correspond to spaces between the contact points.

23. (previously presented) The mouthpiece of claim 21, wherein the first wall and the second wall are bendable, and wherein the bridge structure keeps the first wall separated from the second wall during suction.

24. (currently amended) The mouthpiece of claim 21, wherein at least one of the first wall and the second wall includes one or more perforations distributed along one or more of the first edges or along one or more of the second edges.

25. (previously presented) The mouthpiece of claim 21, further comprising a stability bar extending along a longitudinal axis of the main body between the first end and the second end, wherein a thickness of the stability bar reinforces a resilience of the main body.

26. (previously presented) The mouthpiece of claim 21, wherein the main body is formed by injection-molding as one piece.

27. (previously presented) The mouthpiece of claim 26, wherein at least one of the cheek retractor and suction connector is formed by injection-molding and integral with the main body.

28. (previously presented) The mouthpiece of claim 26, further comprising a stability bar extending along a longitudinal axis of the main body between the first end and the second end, wherein the stability bar is formed by injection-molding and integral with the main body.

29. (previously presented) The mouthpiece of claim 21, further comprising a mouth prop connected to the suction connector.

30. (previously presented) The mouthpiece of claim 21, wherein the suction connector includes a cutout configured to interlock with a corresponding protrusion of a vacuum adapter.

31. (new) The mouthpiece of claim 21, wherein the first edges of the first wall include a superior edge and an inferior edge.

32. (new) The mouthpiece of claim 21, wherein the second edges of the second wall include a superior edge and an inferior edge.

REMARKS

Status of the Claims

Claims 1, 2, 4-8, 10, 14-16, and 21-32 remain pending. Claim 1, 21, and 24 are amended herein. New claims 31 and 32 are added. No new matter is added.

Rejections under 35 U.S.C. § 112

Claims 1, 2, 4-8, 10, 14-16 and 21-30 are rejected under 35 U.S.C. § 112(a) as purportedly failing to comply with the written description requirement. *Office Action*, 2. The *Office Action* refers specifically to the statement that "a set of holes may also form a mesh along the walls of the superior and inferior edges." *Id.* at 3. Such statement, however, merely refers to the location of the "mesh" at different sides of the mouthpiece, *e.g.*, in relation to a patient's mouth during usage. *See e.g., Specification*, [0035] ("Superior may be used herein to refer to the side that rests against a roof of a patient's mouth when placed therein, and inferior may be used to refer to the side that rests against the floor of the patient's mouth"); [0037] ("In addition, the main body portion 110 of the mouthpiece may include a plurality of holes 140 distributed along the superior and inferior sides of the anterior and posterior walls").

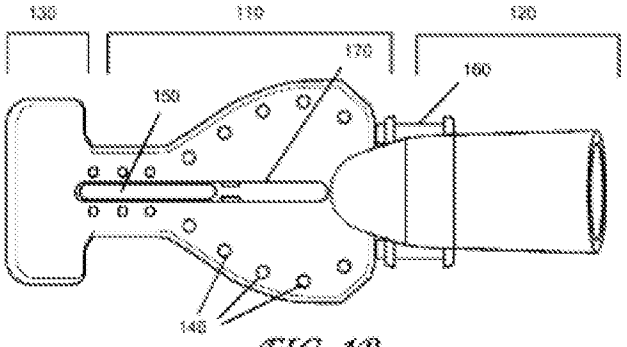

FIG. 1B

As illustrated in FIG. 1B (provided above), the "holes 140" are distributed to form a "mesh" within part of the main body portion 110, specifically located along certain sides of a wall of the main body portion 110 between the suction connector portion 120 and the cheek

retractor portion 130. *See id.* at [0034] ("The main body potion 110 may connect to a suction connector portion 120 on one end and a cheek retractor portion 130 at the other end").

Notwithstanding and in an effort to facilitate prosecution, the independent claims are amended to recite 'a first wall having a plurality of first edges' and 'a second wall having a plurality of second edges.' Dependent claim 24 is also amended for consistency with the same.

Based on the foregoing, Applicant respectfully requests that the rejections of the claims under 35 U.S.C. § 112(a) be withdrawn.

CONCLUSION

Based on the foregoing remarks, the Applicant respectfully contends that all outstanding rejections and objections have been overcome. Accordingly, it is respectfully submitted that the present application is in condition for allowance.

If the Examiner has any questions regarding the case, the Examiner is invited to contact the Applicant's undersigned representative.

Respectfully submitted,

March 31, 2023

By: /Tam Thanh Pham/

Tam Thanh Pham, Reg. No. 50,565
POLSINELLI *LLP*
3 Embarcadero Center, Suite 2400
San Francisco, CA 94111
Phone: (415) 248-2116
patentdocketing@polsinelli.com

Electronic Acknowledgement Receipt

EFS ID:	47775415
Application Number:	14228057
International Application Number:	
Confirmation Number:	1983
Title of Invention:	INTRAORAL DEVICE WITH SLIT
First Named Inventor/Applicant Name:	Thien Nguyen
Customer Number:	138718
Filer:	TamThanh Thi Pham/Cheri Houle
Filer Authorized By:	TamThanh Thi Pham
Attorney Docket Number:	INCEP-001COD
Receipt Date:	31-MAR-2023
Filing Date:	27-MAR-2014
Time Stamp:	17:46:04
Application Type:	Utility under 35 USC 111(a)

Payment information:

Submitted with Payment	no

File Listing:

Document Number	Document Description	File Name	File Size(Bytes)/ Message Digest	Multi Part /.zip	Pages (if appl.)
1	Power of Attorney	INCEP-001COD_POA_3-31-23.pdf	683179 820be89db0cd0f26faa5429ab7ae7981fe00f850	no	2

Warnings:

Information:					
2	Assignee showing of ownership per 37 CFR 3.73	INCEP-001COD_373_STMT_3-31-23.pdf	109216 d8874d6c255ab5fa9d8d3db709e05672c28982d3	no	3
Warnings:					
Information:					
3	After Final Consideration Program Request	INCEP-001COD_AFCP_3-31-23.pdf	204468 7d0ff24b521c17c8dde20e92f47c48813e502f59	no	2
Warnings:					
Information:					
4		INCEP-001COD_AMEND_3-31-23.pdf	172349 c462460b91c727f35a3ac527fa50a7e866ca0b3f	yes	11

	Multipart Description/PDF files in .zip description		
	Document Description	**Start**	**End**
	Response After Final Action	1	1
	Specification	2	2
	Claims	3	8
	Applicant Arguments/Remarks Made in an Amendment	9	11

Warnings:	
Information:	
Total Files Size (in bytes):	1169212

This Acknowledgement Receipt evidences receipt on the noted date by the USPTO of the indicated documents, characterized by the applicant, and including page counts, where applicable. It serves as evidence of receipt similar to a Post Card, as described in MPEP 503.

New Applications Under 35 U.S.C. 111

If a new application is being filed and the application includes the necessary components for a filing date (see 37 CFR 1.53(b)-(d) and MPEP 506), a Filing Receipt (37 CFR 1.54) will be issued in due course and the date shown on this Acknowledgement Receipt will establish the filing date of the application.

National Stage of an International Application under 35 U.S.C. 371

If a timely submission to enter the national stage of an international application is compliant with the conditions of 35 U.S.C. 371 and other applicable requirements a Form PCT/DO/EO/903 indicating acceptance of the application as a national stage submission under 35 U.S.C. 371 will be issued in addition to the Filing Receipt, in due course.

New International Application Filed with the USPTO as a Receiving Office

If a new international application is being filed and the international application includes the necessary components for an international filing date (see PCT Article 11 and MPEP 1810), a Notification of the International Application Number and of the International Filing Date (Form PCT/RO/105) will be issued in due course, subject to prescriptions concerning national security, and the date shown on this Acknowledgement Receipt will establish the international filing date of the application.

DocuSign Envelope ID: 62B39B6A-07A0-4143-A1DB-459099E3CD42

PTO/AIA/80 (07-17)
Approved for use through 03/31/2021. OMB 0651-0035
U.S. Patent and Trademark Office; U.S. DEPARTMENT OF COMMERCE
Under the Paperwork Reduction Act of 1995, no person is required to respond to a collection of information unless it displays a valid OMB control number

POWER OF ATTORNEY TO PROSECUTE APPLICATIONS BEFORE THE USPTO

I hereby revoke all previous powers of attorney given in the application identified in the attached statement under 37 CFR 3.73(c).

I hereby appoint:

[X] Practitioners associated with Customer Number: 138718

OR

[ ] Practitioner(s) named below (if more than ten patent practitioners are to be named, then a customer number must be used):

Name	Registration Number	Name	Registration Number

As attorney(s) or agent(s) to represent the undersigned before the United States Patent and Trademark Office (USPTO) in connection with any and all patent applications assigned only to the undersigned according to the USPTO assignment records or assignment documents attached to this form in accordance with 37 CFR 3.73(c).

Please change the correspondence address for the application identified in the attached statement under 37 CFR 3.73(c) to:

[X] The address associated with Customer Number: 138718

OR

[ ]

Firm or individual name		
Address		
City	State	Zip
Country		
Telephone	Email	

Assignee name and address: Solmetex, LLC
50 Bearfoot Rd.
Northborough, MA 01532

A copy of this form, together with a statement under 37 CFR 3.73(c) (Form PTO/AIA/96 or equivalent) is required to be filed in each application in which this form is used. The statement under 37 CFR 3.73(c) may be completed by one of the practitioners appointed in this form, and must identify the application in which this Power of Attorney is to be filed.

SIGNATURE of Assignee of Record

The individual whose signature and title is supplied below is authorized to act on behalf of the assignee.

Signature DocuSigned by: Lauren Nagel	Date 1/10/2023
Name Lauren Nagel	Telephone
Title Chief Operating Officer	

This collection of information is required by 37 CFR 1.31, 1.32, and 1.33. The information is required to obtain or retain a benefit by the public, which is to update (and by the USPTO to process) the file of a patent or reexamination proceeding. Confidentiality is governed by 35 U.S.C. 122 and 37 CFR 1.11 and 1.14. This collection is estimated to take 18 minutes to complete, including gathering, preparing, and submitting the completed application form to the USPTO. Time will vary depending upon the individual case. Any comments on the amount of time you require to complete this form and/or suggestions for reducing this burden, should be sent to the Chief Information Officer, U.S. Patent and Trademark Office, U.S. Department of Commerce, P.O. Box 1450, Alexandria, VA 22313-1450. DO NOT SEND FEES OR COMPLETED FORMS TO THIS ADDRESS. **SEND TO: Commissioner for Patents, P.O. Box 1450, Alexandria, VA 22313-1450.**

If you need assistance in completing the form, call 1-800-PTO-9199 and select option 2.

DocuSign Envelope ID: 62B39B6A-07A0-4143-A1DB-459099E3CD42

Privacy Act Statement

The **Privacy Act of 1974 (P.L. 93-579)** requires that you be given certain information in connection with your submission of the attached form related to a patent application or patent. Accordingly, pursuant to the requirements of the Act, please be advised that: (1) the general authority for the collection of this information is 35 U.S.C. 2(b)(2); (2) furnishing of the information solicited is voluntary; and (3) the principal purpose for which the information is used by the U.S. Patent and Trademark Office is to process and/or examine your submission related to a patent application or patent. If you do not furnish the requested information, the U.S. Patent and Trademark Office may not be able to process and/or examine your submission, which may result in termination of proceedings or abandonment of the application or expiration of the patent.

The information provided by you in this form will be subject to the following routine uses:

1. The information on this form will be treated confidentially to the extent allowed under the Freedom of Information Act (5 U.S.C. 552) and the Privacy Act (5 U.S.C 552a). Records from this system of records may be disclosed to the Department of Justice to determine whether disclosure of these records is required by the Freedom of Information Act.
2. A record from this system of records may be disclosed, as a routine use, in the course of presenting evidence to a court, magistrate, or administrative tribunal, including disclosures to opposing counsel in the course of settlement negotiations.
3. A record in this system of records may be disclosed, as a routine use, to a Member of Congress submitting a request involving an individual, to whom the record pertains, when the individual has requested assistance from the Member with respect to the subject matter of the record.
4. A record in this system of records may be disclosed, as a routine use, to a contractor of the Agency having need for the information in order to perform a contract. Recipients of information shall be required to comply with the requirements of the Privacy Act of 1974, as amended, pursuant to 5 U.S.C. 552a(m).
5. A record related to an International Application filed under the Patent Cooperation Treaty in this system of records may be disclosed, as a routine use, to the International Bureau of the World Intellectual Property Organization, pursuant to the Patent Cooperation Treaty.
6. A record in this system of records may be disclosed, as a routine use, to another federal agency for purposes of National Security review (35 U.S.C. 181) and for review pursuant to the Atomic Energy Act (42 U.S.C. 218(c)).
7. A record from this system of records may be disclosed, as a routine use, to the Administrator, General Services, or his/her designee, during an inspection of records conducted by GSA as part of that agency's responsibility to recommend improvements in records management practices and programs, under authority of 44 U.S.C. 2904 and 2906. Such disclosure shall be made in accordance with the GSA regulations governing inspection of records for this purpose, and any other relevant (*i.e.*, GSA or Commerce) directive. Such disclosure shall not be used to make determinations about individuals.
8. A record from this system of records may be disclosed, as a routine use, to the public after either publication of the application pursuant to 35 U.S.C. 122(b) or issuance of a patent pursuant to 35 U.S.C. 151. Further, a record may be disclosed, subject to the limitations of 37 CFR 1.14, as a routine use, to the public if the record was filed in an application which became abandoned or in which the proceedings were terminated and which application is referenced by either a published application, an application open to public inspection or an issued patent.
9. A record from this system of records may be disclosed, as a routine use, to a Federal, State, or local law enforcement agency, if the USPTO becomes aware of a violation or potential violation of law or regulation.

PTO/AIA/96 (08-12)
Approved for use through 11/30/2020. OMB 0651-0031
U.S. Patent and Trademark Office; U.S. DEPARTMENT OF COMMERCE
Under the Paperwork Reduction Act of 1995, no persons are required to respond to a collection of information unless it displays a valid OMB control number.

STATEMENT UNDER 37 CFR 3.73(c)

Applicant/Patent Owner: SOLMETEX, LLC

Application No./Patent No.: 14/228,057 Filed/Issue Date: 03-27-2014

Titled: INTRAORAL DEVICE

SOLMETEX, LLC, a corporation

(Name of Assignee) (Type of Assignee, e.g., corporation, partnership, university, government agency, etc.)

states that, for the patent application/patent identified above, it is (choose **one** of options 1, 2, 3 or 4 below):

1. ☑ The assignee of the entire right, title, and interest.

2. ☐ An assignee of less than the entire right, title, and interest (check applicable box):

☐ The extent (by percentage) of its ownership interest is _____%. Additional Statement(s) by the owners holding the balance of the interest must be submitted to account for 100% of the ownership interest.

☐ There are unspecified percentages of ownership. The other parties, including inventors, who together own the entire right, title and interest are:

Additional Statement(s) by the owner(s) holding the balance of the interest must be submitted to account for the entire right, title, and interest.

3. ☐ The assignee of an undivided interest in the entirety (a complete assignment from one of the joint inventors was made). The other parties, including inventors, who together own the entire right, title, and interest are:

Additional Statement(s) by the owner(s) holding the balance of the interest must be submitted to account for the entire right, title, and interest.

4. ☐ The recipient, via a court proceeding or the like (*e.g.*, bankruptcy, probate), of an undivided interest in the entirety (a complete transfer of ownership interest was made). The certified document(s) showing the transfer is attached.

The interest identified in option 1, 2 or 3 above (not option 4) is evidenced by either (choose **one** of options A or B below):

A. ☐ An assignment from the inventor(s) of the patent application/patent identified above. The assignment was recorded in the United States Patent and Trademark Office at Reel _____, Frame _____, or for which a copy thereof is attached.

B. ☑ A chain of title from the inventor(s), of the patent application/patent identified above, to the current assignee as follows:

1. From: Inventors To: INCEPT, INC.

The document was recorded in the United States Patent and Trademark Office at
Reel 032545, Frame 0891, or for which a copy thereof is attached.

2. From: INCEPT, INC. To: DRYSHIELD, LLC

The document was recorded in the United States Patent and Trademark Office at
Reel 042916, Frame 0954, or for which a copy thereof is attached.

This collection of information is required by 37 CFR 3.73(b). The information is required to obtain or retain a benefit by the public which is to file (and by the USPTO to process) an application. Confidentiality is governed by 35 U.S.C. 122 and 37 CFR 1.11 and 1.14. This collection is estimated to take 12 minutes to complete, including gathering, preparing, and submitting the completed application form to the USPTO. Time will vary depending upon the individual case. Any comments on the amount of time you require to complete this form and/or suggestions for reducing this burden, should be sent to the Chief Information Officer, U.S. Patent and Trademark Office, U.S. Department of Commerce, P.O. Box 1450, Alexandria, VA 22313-1450. DO NOT SEND FEES OR COMPLETED FORMS TO THIS ADDRESS. **SEND TO: Commissioner for Patents, P.O. Box 1450, Alexandria, VA 22313-1450.**

If you need assistance in completing the form, call 1-800-PTO-9199 and select option 2.

PTO/AIA/96 (08-12)
Approved for use through 11/30/2020 OMB 0651-0031
U.S. Patent and Trademark Office; U.S. DEPARTMENT OF COMMERCE
Under the Paperwork Reduction Act of 1995, no persons are required to respond to a collection of information unless it displays a valid OMB control number.

STATEMENT UNDER 37 CFR 3.73(c)

3. From: DRYSHIELD, LLC To: SOLMETEX, LLC

The document was recorded in the United States Patent and Trademark Office at
Reel 060107, Frame 0030, or for which a copy thereof is attached.

4. From: _____ To: _____

The document was recorded in the United States Patent and Trademark Office at
Reel _____, Frame _____, or for which a copy thereof is attached.

5. From: _____ To: _____

The document was recorded in the United States Patent and Trademark Office at
Reel _____, Frame _____, or for which a copy thereof is attached.

6. From: _____ To: _____

The document was recorded in the United States Patent and Trademark Office at
Reel _____, Frame _____, or for which a copy thereof is attached.

☐ Additional documents in the chain of title are listed on a supplemental sheet(s).

☑ As required by 37 CFR 3.73(c)(1)(i), the documentary evidence of the chain of title from the original owner to the assignee was, or concurrently is being, submitted for recordation pursuant to 37 CFR 3.11.

[NOTE: A separate copy (i.e., a true copy of the original assignment document(s)) must be submitted to Assignment Division in accordance with 37 CFR Part 3, to record the assignment in the records of the USPTO. See MPEP 302.08]

The undersigned (whose title is supplied below) is authorized to act on behalf of the assignee.

/Tam Thanh Pham/	March 31, 2023
Signature	Date
Tam Thanh Pham	50565
Printed or Typed Name	Title or Registration Number

Privacy Act Statement

The **Privacy Act of 1974 (P.L. 93-579)** requires that you be given certain information in connection with your submission of the attached form related to a patent application or patent. Accordingly, pursuant to the requirements of the Act, please be advised that: (1) the general authority for the collection of this information is 35 U.S.C. 2(b)(2); (2) furnishing of the information solicited is voluntary; and (3) the principal purpose for which the information is used by the U.S. Patent and Trademark Office is to process and/or examine your submission related to a patent application or patent. If you do not furnish the requested information, the U.S. Patent and Trademark Office may not be able to process and/or examine your submission, which may result in termination of proceedings or abandonment of the application or expiration of the patent.

The information provided by you in this form will be subject to the following routine uses:

1. The information on this form will be treated confidentially to the extent allowed under the Freedom of Information Act (5 U.S.C. 552) and the Privacy Act (5 U.S.C 552a). Records from this system of records may be disclosed to the Department of Justice to determine whether disclosure of these records is required by the Freedom of Information Act.
2. A record from this system of records may be disclosed, as a routine use, in the course of presenting evidence to a court, magistrate, or administrative tribunal, including disclosures to opposing counsel in the course of settlement negotiations.
3. A record in this system of records may be disclosed, as a routine use, to a Member of Congress submitting a request involving an individual, to whom the record pertains, when the individual has requested assistance from the Member with respect to the subject matter of the record.
4. A record in this system of records may be disclosed, as a routine use, to a contractor of the Agency having need for the information in order to perform a contract. Recipients of information shall be required to comply with the requirements of the Privacy Act of 1974, as amended, pursuant to 5 U.S.C. 552a(m).
5. A record related to an International Application filed under the Patent Cooperation Treaty in this system of records may be disclosed, as a routine use, to the International Bureau of the World Intellectual Property Organization, pursuant to the Patent Cooperation Treaty.
6. A record in this system of records may be disclosed, as a routine use, to another federal agency for purposes of National Security review (35 U.S.C. 181) and for review pursuant to the Atomic Energy Act (42 U.S.C. 218(c)).
7. A record from this system of records may be disclosed, as a routine use, to the Administrator, General Services, or his/her designee, during an inspection of records conducted by GSA as part of that agency's responsibility to recommend improvements in records management practices and programs, under authority of 44 U.S.C. 2904 and 2906. Such disclosure shall be made in accordance with the GSA regulations governing inspection of records for this purpose, and any other relevant (*i.e.*, GSA or Commerce) directive. Such disclosure shall not be used to make determinations about individuals.
8. A record from this system of records may be disclosed, as a routine use, to the public after either publication of the application pursuant to 35 U.S.C. 122(b) or issuance of a patent pursuant to 35 U.S.C. 151. Further, a record may be disclosed, subject to the limitations of 37 CFR 1.14, as a routine use, to the public if the record was filed in an application which became abandoned or in which the proceedings were terminated and which application is referenced by either a published application, an application open to public inspection or an issued patent.
9. A record from this system of records may be disclosed, as a routine use, to a Federal, State, or local law enforcement agency, if the USPTO becomes aware of a violation or potential violation of law or regulation.

CORRECTED ADS FORM

Application Number	14228057
Title of Invention	INTRAORAL DEVICE WITH SLIT

Inventor Information

****If no data is shown, no data has been corrected****

	Data of Record	Updated Data
Order Number	1	
Name	Thien Nguyen	
Residence Information		
Residency	us-residency	
City	Santa Ana	
State	CA	
Country of Residence	US	
Mailing Address of Inventor		
Address 1	~~11230 Grace Ave.~~	50 BEARFOOT RD
Address 2	~~Suite B~~	
City,State/Province, Postal Code	~~Fountain Valley CA 92708~~	NORTHBOROUGH MA 01532
Country	US	

	Data of Record	Updated Data
Order Number	2	
Name	Tam Thanh Pham	

Residence Information

Residency	us-residency	
City	San Francisco	
State	CA	
Country of Residence	US	

Mailing Address of Inventor

Address 1		50 BEARFOOT RD
Address 2		
City,State/Province, Postal Code		NORTHBOROUGH MA 01532
Country		US

Application Information

	Data of Record	Updated Data
Title of Invention	~~INTRAORAL DEVICE WITH SLIT~~	INTRAORAL DEVICE
Attorney Docket Number	INCEP-001COD	
Entity Type	Small	

Domestic Benefit/National Stage Information

****If no data is shown, no data has been corrected****

This section allows for the applicant to either claim benefit under 35 U.S.C. 119(e), 120, 121,365(c), or 386(c) or indicate National Stage entry from a PCT application. Providing this information in the application data sheet constitutes the specific reference required by 35 U.S. C. 119(e) or 120, and 37 CFR 1.78(a).

		Data of Record	Updated Data
	Prior Application Status	patented	
	Application Number	14228057	
	Continuity Type	CON	
	Prior Application Number	14100323	
	Filing Date (YYYY-MM-DD)	2013-12-09	
	Patent Number	8911232	
	Issue Date (YYYY-MM-DD)	2014-12-16	

		Data of Record	Updated Data
	Prior Application Status	~~pending~~	expired
	Application Number	14100323	
	Continuity Type	PRO	
	Prior Application Number	61734939	
	Filing Date (YYYY-MM-DD)	2012-12-07	
	Patent Number		
	Issue Date (YYYY-MM-DD)		

Foreign Priority Information

****If no data is shown, no data has been corrected****

This section allows for the applicant to claim priority to a foreign application. Providing this information in the application data sheet constitutes the claim for priority as required by 35 U.S.C. 119(b) and 37 CFR 1.55. When priority is claimed to a foreign application that is eligible for retrieval under the priority document exchange program (PDX) the information will be used by the Office to automatically attempt retrieval pursuant to 37 CFR 1.55(i)(1) and (2). Under the PDX program, applicant bears the ultimate responsibility for ensuring that a copy of the foreign application is received by the Office from the participating foreign intellectual property office, or a certified copy of the foreign priority application is filed, within the time period specified in 37 CFR 1.55(g)(1).

		Data of Record	Updated Data
	Application Number		
	Country		
	Filing Date		
	Access Code		

Applicant Information

****If no data is shown, no data has been corrected****
Providing assignment information in this section does not substitute for compliance with any requirement of part 3 of Title 37 of CFR to have an assignment recorded by the Office.

	Data of Record	Updated Data
Applicant Type	ASG	
If applicant is the legal representative, indicate the authority to file the patent application, the inventor is		
Name of the Deceased or Legally Incapacitated Inventor		
Applicant is an Organization	Yes	
Name		
Organization Name	~~Dryshield, LLC~~	SOLMETEX, LLC
Address 1		50 BEARFOOT RD
Address 2		
City,State/Province,Postal Code	~~Fountain Valley CA 92708~~	NORTHBOROUGH MA 01532
Country	US	
Phone Number		
Fax Number		

Email Address		

Assignee Information including Non-Applicant Assignee Information

****If no data is shown, no data has been corrected****
Providing this information in the application data sheet does not substitute for compliance with any requirement of part 3 of Title 37 of the CFR to have an assignment recorded in the Office

	Data of Record	Updated Data
Order	1	
Applicant is an Organization	Yes	
Name		
Organization Name	~~Dryshield, LLC~~	

Mailing Address

Address 1	~~11230 Grace Ave~~	
Address 2		
City,State/Province,Postal Code	~~Fountain Valley CA 92708~~	
Country	~~US~~	
Phone Number		
Fax Number		
Email Address		

Signature

NOTE: This Application Data Sheet must be signed in accordance with 37 CFR 1.33(b).

This Application Data Sheet **must** be signed by a patent practitioner if one or more of the applicants is a **juristic entity** (e.g., corporation or association). If the applicant is two or more joint inventors, this form must be signed by a patent practitioner, **all** joint inventors who are the applicant, or one or more joint inventor-applicants who have been given power of attorney (e.g., see USPTO Form PTO/AIA/81) on behalf of **all** joint inventor-applicants.

See 37 CFR 1.4(d) for the manner of making signatures and certifications.

Signature	/Tam Thanh Pham/	Registration Number	50565
First Name	Tam Thanh	Last Name	Pham

[redacted]

Electronic Acknowledgement Receipt

EFS ID:	47775489
Application Number:	14228057
International Application Number:	
Confirmation Number:	1983
Title of Invention:	INTRAORAL DEVICE WITH SLIT
First Named Inventor/Applicant Name:	Thien Nguyen
Customer Number:	138718
Filer:	TamThanh Thi Pham/Cheri Houle
Filer Authorized By:	TamThanh Thi Pham
Attorney Docket Number:	INCEP-001COD
Receipt Date:	31-MAR-2023
Filing Date:	27-MAR-2014
Time Stamp:	17:52:26
Application Type:	Utility under 35 USC 111(a)

Payment information:

Submitted with Payment	no

File Listing:

Document Number	Document Description	File Name	File Size(Bytes)/ Message Digest	Multi Part /.zip	Pages (if appl.)
1	Application Data Sheet to update/ correct info	CorrectedADS.pdf	127444 23e67f83e7d62c4aebeed8e62c0004e6212d9205	no	6

Warnings:

Information:	
Total Files Size (in bytes):	127444

This Acknowledgement Receipt evidences receipt on the noted date by the USPTO of the indicated documents, characterized by the applicant, and including page counts, where applicable. It serves as evidence of receipt similar to a Post Card, as described in MPEP 503.

New Applications Under 35 U.S.C. 111

If a new application is being filed and the application includes the necessary components for a filing date (see 37 CFR 1.53(b)-(d) and MPEP 506), a Filing Receipt (37 CFR 1.54) will be issued in due course and the date shown on this Acknowledgement Receipt will establish the filing date of the application.

National Stage of an International Application under 35 U.S.C. 371

If a timely submission to enter the national stage of an international application is compliant with the conditions of 35 U.S.C. 371 and other applicable requirements a Form PCT/DO/EO/903 indicating acceptance of the application as a national stage submission under 35 U.S.C. 371 will be issued in addition to the Filing Receipt, in due course.

New International Application Filed with the USPTO as a Receiving Office

If a new international application is being filed and the international application includes the necessary components for an international filing date (see PCT Article 11 and MPEP 1810), a Notification of the International Application Number and of the International Filing Date (Form PCT/RO/105) will be issued in due course, subject to prescriptions concerning national security, and the date shown on this Acknowledgement Receipt will establish the international filing date of the application.

UNITED STATES PATENT AND TRADEMARK OFFICE

UNITED STATES DEPARTMENT OF COMMERCE
United States Patent and Trademark Office
Address: COMMISSIONER FOR PATENTS
P.O. Box 1450
Alexandria, Virginia 22313-1450
www.uspto.gov

APPLICATION NUMBER	FILING OR 371(C) DATE	FIRST NAMED APPLICANT	ATTY. DOCKET NO./TITLE
14/228,057	03/27/2014	Thien Nguyen	INCEP-001COD

CONFIRMATION NO. 1983

138718
Polsinelli LLP
PO Box 140310
Kansas City, MO 64114-0310

POA ACCEPTANCE LETTER

OC000000137694321

Date Mailed: 04/05/2023

NOTICE OF ACCEPTANCE OF POWER OF ATTORNEY

This is in response to the Power of Attorney filed 03/31/2023.

The Power of Attorney in this application is accepted. Correspondence in this application will be mailed to the above address as provided by 37 CFR 1.33.

Questions about the contents of this notice and the requirements it sets forth should be directed to the Office of Data Management, Application Assistance Unit, at **(571) 272-4000** or **(571) 272-4200** or **1-888-786-0101**.

/byemane/

UNITED STATES PATENT AND TRADEMARK OFFICE

UNITED STATES DEPARTMENT OF COMMERCE
United States Patent and Trademark Office
Address: COMMISSIONER FOR PATENTS
P.O. Box 1450
Alexandria, Virginia 22313-1450
www.uspto.gov

APPLICATION NUMBER	FILING or 371(c) DATE	GRP ART UNIT	FIL FEE REC'D	ATTY.DOCKET.NO	TOT CLAIMS	IND CLAIMS
14/228,057	03/27/2014	3772	850	INCEP-001COD	20	3

CONFIRMATION NO. 1983

CORRECTED FILING RECEIPT

138718
Polsinelli LLP
PO Box 140310
Kansas City, MO 64114-0310

OC000000137694330

Date Mailed: 04/05/2023

Receipt is acknowledged of this non-provisional utility patent application. The application will be taken up for examination in due course. Applicant will be notified as to the results of the examination. Any correspondence concerning the application must include the following identification information: the U.S. APPLICATION NUMBER, FILING DATE, NAME OF FIRST INVENTOR, and TITLE OF INVENTION. Fees transmitted by check or draft are subject to collection.

Please verify the accuracy of the data presented on this receipt. If an error is noted on this Filing Receipt, please submit a written request for a corrected Filing Receipt, including a properly marked-up ADS showing the changes with strike-through for deletions and underlining for additions. If you received a "Notice to File Missing Parts" or other Notice requiring a response for this application, please submit any request for correction to this Filing Receipt with your reply to the Notice. When the USPTO processes the reply to the Notice, the USPTO will generate another Filing Receipt incorporating the requested corrections provided that the request is grantable.

Inventor(s)

Thien Nguyen, Santa Ana, CA;
Tam Thanh Pham, San Francisco, CA;

Applicant(s)

SOLMETEX, LLC, Northborough, MA;

Power of Attorney: The patent practitioners associated with Customer Number 138718

Domestic Priority data as claimed by applicant

This application is a CON of 14/100,323 12/09/2013 PAT 8911232
which claims benefit of 61/734,939 12/07/2012

Foreign Applications for which priority is claimed (You may be eligible to benefit from the **Patent Prosecution Highway** program at the USPTO. Please see http://www.uspto.gov for more information.) - None.
Foreign application information must be provided in an Application Data Sheet in order to constitute a claim to foreign priority. See 37 CFR 1.55 and 1.76.

Permission to Access Application via Priority Document Exchange: No

Permission to Access Search Results: No

Applicant may provide or rescind an authorization for access using Form PTO/SB/39 or Form PTO/SB/69 as appropriate.

If Required, Foreign Filing License Granted: 04/18/2014

The country code and number of your priority application, to be used for filing abroad under the Paris Convention, is **US 14/228,057**

Projected Publication Date: Not Applicable

Non-Publication Request: No

Early Publication Request: No
**** SMALL ENTITY ****
Title

INTRAORAL DEVICE

Preliminary Class

433

Statement under 37 CFR 1.55 or 1.78 for AIA (First Inventor to File) Transition Applications: No

PROTECTING YOUR INVENTION OUTSIDE THE UNITED STATES

Since the rights granted by a U.S. patent extend only throughout the territory of the United States and have no effect in a foreign country, an inventor who wishes patent protection in another country must apply for a patent in a specific country or in regional patent offices. Applicants may wish to consider the filing of an international application under the Patent Cooperation Treaty (PCT). An international (PCT) application generally has the same effect as a regular national patent application in each PCT-member country. The PCT process **simplifies** the filing of patent applications on the same invention in member countries, but **does not result** in a grant of "an international patent" and does not eliminate the need of applicants to file additional documents and fees in countries where patent protection is desired.

Almost every country has its own patent law, and a person desiring a patent in a particular country must make an application for patent in that country in accordance with its particular laws. Since the laws of many countries differ in various respects from the patent law of the United States, applicants are advised to seek guidance from specific foreign countries to ensure that patent rights are not lost prematurely.

Applicants also are advised that in the case of inventions made in the United States, the Director of the USPTO must issue a license before applicants can apply for a patent in a foreign country. The filing of a U.S. patent application serves as a request for a foreign filing license. The application's filing receipt contains further information and guidance as to the status of applicant's license for foreign filing.

Applicants may wish to consult the USPTO booklet, "General Information Concerning Patents" (specifically, the section entitled "Treaties and Foreign Patents") for more information on timeframes and deadlines for filing foreign patent applications. The guide is available either by contacting the USPTO Contact Center at 800-786-9199, or it can be viewed on the USPTO website at http://www.uspto.gov/web/offices/pac/doc/general/index.html.

For information on preventing theft of your intellectual property (patents, trademarks and copyrights), you may wish to consult the U.S. Government website, http://www.stopfakes.gov. Part of a Department of Commerce initiative, this website includes self-help "toolkits" giving innovators guidance on how to protect intellectual property in specific countries such as China, Korea and Mexico. For questions regarding patent enforcement issues, applicants may call the U.S. Government hotline at 1-866-999-HALT (1-866-999-4258).

LICENSE FOR FOREIGN FILING UNDER

Title 35, United States Code, Section 184

Title 37, Code of Federal Regulations, 5.11 & 5.15

GRANTED

The applicant has been granted a license under 35 U.S.C. 184, if the phrase "IF REQUIRED, FOREIGN FILING LICENSE GRANTED" followed by a date appears on this form. Such licenses are issued in all applications where the conditions for issuance of a license have been met, regardless of whether or not a license may be required as set forth in 37 CFR 5.15. The scope and limitations of this license are set forth in 37 CFR 5.15(a) unless an earlier license has been issued under 37 CFR 5.15(b). The license is subject to revocation upon written notification. The date indicated is the effective date of the license, unless an earlier license of similar scope has been granted under 37 CFR 5.13 or 5.14.

This license is to be retained by the licensee and may be used at any time on or after the effective date thereof unless it is revoked. This license is automatically transferred to any related applications(s) filed under 37 CFR 1.53(d). This license is not retroactive.

The grant of a license does not in any way lessen the responsibility of a licensee for the security of the subject matter as imposed by any Government contract or the provisions of existing laws relating to espionage and the national security or the export of technical data. Licensees should apprise themselves of current regulations especially with respect to certain countries, of other agencies, particularly the Office of Defense Trade Controls, Department of State (with respect to Arms, Munitions and Implements of War (22 CFR 121-128)); the Bureau of Industry and Security, Department of Commerce (15 CFR parts 730-774); the Office of Foreign AssetsControl, Department of Treasury (31 CFR Parts 500+) and the Department of Energy.

NOT GRANTED

No license under 35 U.S.C. 184 has been granted at this time, if the phrase "IF REQUIRED, FOREIGN FILING LICENSE GRANTED" DOES NOT appear on this form. Applicant may still petition for a license under 37 CFR 5.12, if a license is desired before the expiration of 6 months from the filing date of the application. If 6 months has lapsed from the filing date of this application and the licensee has not received any indication of a secrecy order under 35 U.S.C. 181, the licensee may foreign file the application pursuant to 37 CFR 5.15(b).

SelectUSA

The United States represents the largest, most dynamic marketplace in the world and is an unparalleled location for business investment, innovation, and commercialization of new technologies. The U.S. offers tremendous resources and advantages for those who invest and manufacture goods here. Through SelectUSA, our nation works to promote and facilitate business investment. SelectUSA provides information assistance to the international investor community; serves as an ombudsman for existing and potential investors; advocates on behalf of U.S. cities, states, and regions competing for global investment; and counsels U.S. economic development organizations on investment attraction best practices. To learn more about why the United States is the best country in the world to develop technology, manufacture products, deliver services, and grow your business, visit http://www.SelectUSA.gov or call +1-202-482-6800.

UNITED STATES DEPARTMENT OF COMMERCE
United States Patent and Trademark Office
Address: COMMISSIONER FOR PATENTS
P.O. Box 1450
Alexandria, Virginia 22313-1450
www.uspto.gov

APPLICATION NO.	FILING DATE	FIRST NAMED INVENTOR	ATTORNEY DOCKET NO.	CONFIRMATION NO.
14/228,057	03/27/2014	Thien Nguyen	INCEP-001COD	1983

138718 7590 04/12/2023

Polsinelli LLP
PO Box 140310
Kansas City, MO 64114-0310

EXAMINER
APONTE, MIRAYDA ARLENE

ART UNIT	PAPER NUMBER
3772	

NOTIFICATION DATE	DELIVERY MODE
04/12/2023	ELECTRONIC

Please find below and/or attached an Office communication concerning this application or proceeding.

The time period for reply, if any, is set in the attached communication.

Notice of the Office communication was sent electronically on above-indicated "Notification Date" to the following e-mail address(es):

patentdocketing@polsinelli.com
sfpatent@polsinelli.com

Advisory Action Before the Filing of an Appeal Brief	**Application No.** 14/228,057	**Applicant(s)** Nguyen et al.	
	Examiner MIRAYDA A APONTE	**Art Unit** 3772	**AIA (FITF) Status** No

--The MAILING DATE of this communication appears on the cover sheet with the correspondence address --

THE REPLY FILED 31 March 2023 FAILS TO PLACE THIS APPLICATION IN CONDITION FOR ALLOWANCE.

NO NOTICE OF APPEAL FILED

1. ☑ The reply was filed after a final rejection. No Notice of Appeal has been filed. To avoid abandonment of this application, applicant must timely file one of the following replies: (1) an amendment, affidavit, or other evidence, which places the application in condition for allowance; (2) a Notice of Appeal (with appeal fee) in compliance with 37 CFR 41.31; or (3) a Request for Continued Examination (RCE) in compliance with 37 CFR 1.114 if this is a utility or plant application. Note that RCEs are not permitted in design applications. The reply must be filed within one of the following time periods:
   a) ☐ The period for reply expires ____ months from the mailing date of the final rejection.
   b) ☑ The period for reply expires on: (1) the mailing date of this Advisory Action; or (2) the date set forth in the final rejection, whichever is later. In no event, however, will the statutory period for reply expire later than SIX MONTHS from the mailing date of the final rejection.
   c) ☐ A prior Advisory Action was mailed more than 3 months after the mailing date of the final rejection in response to a first after-final reply filed within 2 months of the mailing date of the final rejection.The current period for reply expires ____ months from the mailing date of *the prior Advisory Action* or SIX MONTHS from the mailing date of the final rejection, whichever is earlier.
   Examiner Note: If box 1 is checked, check either box (a), (b) or (c). ONLY CHECK BOX (b) WHEN THIS ADVISORY ACTION IS THE FIRST RESPONSE TO APPLICANTS FIRST AFTER-FINAL REPLY WHICH WAS FILED WITHIN TWO MONTHS OF THE FINAL REJECTION. ONLY CHECK BOX (c) IN THE LIMITED SITUATION SET FORTH UNDER BOX (c). See MPEP 706.07(f).

Extensions of time may be obtained under 37 CFR 1.136(a). The date on which the petition under 37 CFR 1.136(a) and the appropriate extension fee have been filed is the date for purposes of determining the period of extension and the corresponding amount of the fee. The appropriate extension fee under 37 CFR 1.17(a) is calculated from: (1) the expiration date of the shortened statutory period for reply originally set in the final Office action; or (2) as set forth in (b) or (c) above, if checked. Any reply received by the Office later than three months after the mailing date of the final rejection, even if timely filed, may reduce any earned patent term adjustment. See 37 CFR 1.704(b).

NOTICE OF APPEAL

2. ☐ The Notice of Appeal was filed on _____. A brief in compliance with 37 CFR 41.37 must be filed within two months of the date of filing the Notice of Appeal (37 CFR 41.37(a)), or any extension thereof (37 CFR 41.37(e)), to avoid dismissal of the appeal. Since a Notice of Appeal has been filed, any reply must be filed within the time period set forth in 37CFR 41.37(a).

AMENDMENTS

3. ☑ The proposed amendments filed after a final rejection, but prior to the date of filing a brief, will not be entered because
   a) ☑ They raise new issues that would require further consideration and/or search (see NOTE below);
   b) ☐ They raise the issue of new matter (see NOTE below);
   c) ☐ They are not deemed to place the application in better form for appeal by materially reducing or simplifying the issues for appeal; and/or
   d) ☑ They present additional claims without canceling a corresponding number of finally rejected claims.
   NOTE: See Continuation Sheet (See 37 CFR 1.116 and 41.33(a)).
4. ☐ The amendments are not in compliance with 37 CFR 1.121. See attached Notice of Non-Compliant Amendment (PTOL-324).
5. ☑ Applicant's reply has overcome the following rejection(s): 102 (a)
6. ☐ Newly proposed or amended claim(s) _____ would be allowable if submitted in a separate, timely filed amendment canceling the non-allowable claim(s).
7. ☑ For purposes of appeal, the proposed amendment(s):(a) ☑ will not be entered, or (b) ☐ will be entered, and an explanation of how the new or amended claims would be rejected is provided below or appended.

AFFIDAVIT OR OTHER EVIDENCE

8. ☐ A declaration(s)/affidavit(s) under **37 CFR 1.130(b)** was/were filed on _____
9. ☐ The affidavit or other evidence filed after final action, but before or on the date of filing a Notice of Appeal will not be entered because applicant failed to provide a showing of good and sufficient reasons why the affidavit or other evidence is necessary and was not earlier presented. See 37 CFR 1.116(e).
10. ☐ The affidavit or other evidence filed after the date of filing the Notice of Appeal, but prior to the date of filing a brief, will not be entered because the affidavit or other evidence failed to overcome all rejections under appeal and/or appellant fails to provide a showing of good and sufficient reasons why it is necessary and was not earlier presented. See 37 CFR 41.33(d)(1).
11. ☐ The affidavit or other evidence is entered. An explanation of the status of the claims after entry is below or attached.

REQUEST FOR RECONSIDERATION/OTHER

12. ☐ The request for reconsideration has been considered but does NOT place the application in condition for allowance because: _____.
13. ☐ Note the attached Information *Disclosure Statement*(s). (PTO/SB/08) Paper No(s). _____
14. ☑ Other: PTO - 2323.

STATUS OF CLAIMS

15. The status of the claim(s) is (or will be) as follows:
    Claim(s) allowed:_____.
    Claim(s) objected to:_____.
    Claim(s) rejected:1-2,4-8,10,14-16 and 21-30.
    Claim(s) withdrawn from consideration:_____.

/MIRAYDA A APONTE/ Examiner, Art Unit 3772	/RALPH A LEWIS/ Primary Examiner, Art Unit 3772

Continuation of 3. NOTE: Applicant' s request for entry into AFCP 2.0 is acknowledged, but it is denied because the response includes two new claims (31 and 32) without canceling the corresponding quantity of claims from the last examination.

AFCP 2.0 Decision

Application No.	Applicant(s)	
14/228,057	Nguyen et al.	
Examiner	**Art Unit**	**AIA (FITF) Status**
MIRAYDA A APONTE	3772	No

This is in response to the After Final Consideration Pilot request filed 31 March 2023.

1. **Improper Request** – The AFCP 2.0 request is improper for the following reason(s) and the after final amendment submitted with the request will be treated under pre-pilot procedure.

   ☐ An AFCP 2.0 request form PTO/SB/434 (or equivalent document) was not submitted.

   ☐ A non-broadening amendment to at least one independent claim was not submitted.

   ☐ The request is not the first proper AFCP 2.0 request submitted in response to the most recent final rejection.

   ☐ Other: _____

2. **Proper Request**

   A. After final amendment submitted with the request will not be treated under AFCP 2.0.
   The after final amendment cannot be reviewed and a search conducted within the guidelines of the pilot program.

   ☑ The after final amendment will be treated under pre-pilot procedure.

   B. Updated search and/or completed additional consideration.
   The examiner performed an updated search and/or completed additional consideration of the after final amendment within the time authorized for the pilot program. The result(s) of the updated search and/or completed additional consideration are:

   ☐ 1. All of the rejections in the most recent final Office action are overcome and a Notice of Allowance is issued herewith.

   ☐ 2. The after final amendment would not overcome all of the rejections in the most recent final Office action . See attached interview summary for further details.

   ☐ 3. The after final amendment was reviewed, and it raises a new issue(s). See attached interview summary for further details.

   ☐ 4. The after final amendment raises new issues, but would overcome all of the rejections in the most recent final Office action. A decision on determining allowability could not be made within the guidelines of the pilot. See attached interview summary for further details, including any newly discovered prior art.

   ☐ 5. Other: _____

   Examiner Note: Please attach an interview summary when necessary as described above.

DO NOT ENTER: /M.A.A/
04/03/2023

IN THE UNITED STATES PATENT AND TRADEMARK OFFICE

APPLICANT:	Solmetex, LLC
INVENTOR(S):	Thien Nguyen, et al.
APPLICATION NO.:	14/228,057
FILED:	March 27, 2014
TITLE:	INTRAORAL DEVICE (as amended)
EXAMINER:	Mirayda Arlene Aponte
ART UNIT:	3772
CONF. NO.:	1983
ATTY.DKT.NO.:	INCEP-001COD

MAIL STOP AF
COMMISSIONER FOR PATENTS
P.O. BOX 1450
ALEXANDRIA, VA 22313-1450

RESPONSE and

After Final Consideration Pilot Request

Examiner Aponte:

In response to the office action mailed January 5, 2023 (*Office Action*), please consider the following amendments and remarks. Amendments to the specification begins on page two, claims begin on page three, and remarks begin on page nine.

PTO/SB/06 (09-11)
Approved for use through 1/31/2014. OMB 0651-0032
U.S. Patent and Trademark Office; U.S. DEPARTMENT OF COMMERCE
Under the Paperwork Reduction Act of 1995, no persons are required to respond to a collection of information unless it displays a valid OMB control number.

PATENT APPLICATION FEE DETERMINATION RECORD Substitute for Form PTO-875	Application or Docket Number 14/228,057	Filing Date 03/27/2014	☐ To be Mailed

ENTITY: ☐ LARGE ☑ SMALL ☐ MICRO

APPLICATION AS FILED - PART I

FOR	(Column 1) NUMBER FILED	(Column 2) NUMBER EXTRA		RATE ($)	FEE ($)
☐ BASIC FEE (37 CFR 1.16(a), (b), or (c))	N/A	N/A		N/A	
☐ SEARCH FEE (37 CFR 1.16(k), (i), or (m))	N/A	N/A		N/A	
☐ EXAMINATION FEE (37 CFR 1.16(o), (p), or (q))	N/A	N/A		N/A	
TOTAL CLAIMS (37 CFR 1.16(i))	minus 20 =	*		x $40 =	
INDEPENDENT CLAIMS (37 CFR 1.16(h))	minus 3 =	*		x $210 =	
☐ APPLICATION SIZE FEE (37 CFR 1.16(s))	If the specification and drawings exceed 100 sheets of paper, the application size fee due is $310 ($155 for small entity) for each additional 50 sheets or fraction thereof. See 35 U.S.C. 41(a)(1)(G) and 37 CFR 1.16(s).				
☐ MULTIPLE DEPENDENT CLAIM PRESENT (37 CFR 1.16(j))					
* If the difference in column 1 is less than zero, enter "0" in column 2.				TOTAL	

APPLICATION AS AMENDED - PART II

		(Column 1)		(Column 2)	(Column 3)			
AMENDMENT	05/10/2023	CLAIMS REMAINING AFTER AMENDMENT		HIGHEST NUMBER PREVIOUSLY PAID FOR	PRESENT EXTRA		RATE ($)	ADDITIONAL FEE ($)
	Total (37 CFR 1.16(i))	* 21	Minus	** 21	= 0		x $40 =	0
	Independent (37 CFR 1.16(h))	* 2	Minus	*** 3	= 0		x $192 =	0
	☐ Application Size Fee (37 CFR 1.16(s))							
	☐ FIRST PRESENTATION OF MULTIPLE DEPENDENT CLAIM (37 CFR 1.16(j))							
							TOTAL ADD'L FEE	0

		(Column 1)		(Column 2)	(Column 3)			
AMENDMENT		CLAIMS REMAINING AFTER AMENDMENT		HIGHEST NUMBER PREVIOUSLY PAID FOR	PRESENT EXTRA		RATE ($)	ADDITIONAL FEE ($)
	Total (37 CFR 1.16(i))	*	Minus	**	=		x $0 =	
	Independent (37 CFR 1.16(h))	*	Minus	***	=		x $0 =	
	☐ Application Size Fee (37 CFR 1.16(s))							
	☐ FIRST PRESENTATION OF MULTIPLE DEPENDENT CLAIM (37 CFR 1.16(j))							
							TOTAL ADD'L FEE	

* If the entry in column 1 is less than the entry in column 2, write "0" in column 3.	LIE
** If the "Highest Number Previously Paid For" IN THIS SPACE is less than 20, enter "20".	/DAWN BREWER/
*** If the "Highest Number Previously Paid For" IN THIS SPACE is less than 3, enter "3".	
The "Highest Number Previously Paid For" (Total or Independent) is the highest number found in the appropriate box in column 1.	

This collection of information is required by 37 CFR 1.16. The information is required to obtain or retain a benefit by the public which is to file (and by the USPTO to process) an application. Confidentiality is governed by 35 U.S.C. 122 and 37 CFR 1.14. This collection is estimated to take 12 minutes to complete, including gathering, preparing, and submitting the completed application form to the USPTO. Time will vary depending upon the individual case. Any comments on the amount of time you require to complete this form and/or suggestions for reducing this burden, should be sent to the Chief Information Officer, U.S. Patent and Trademark Office, U.S. Department of Commerce, P.O. Box 1450, Alexandria, VA 22313-1450. DO NOT SEND FEES OR COMPLETED FORMS TO THIS ADDRESS. **SEND TO: Commissioner for Patents, P.O. Box 1450, Alexandria, VA 22313-1450.**

If you need assistance in completing the form, call 1-800-PTO-9199 and select option 2.

IN THE UNITED STATES PATENT AND TRADEMARK OFFICE

APPLICANT:	Solmetex, LLC
INVENTOR(S):	Thien Nguyen, et al.
APPLICATION NO.:	14/228,057
FILED:	March 27, 2014
TITLE:	INTRAORAL DEVICE (as amended)
EXAMINER:	Mirayda Arlene Aponte
ART UNIT:	3772
CONF. NO.:	1983
ATTY.DKT.NO.:	INCEP-001COD

MAIL STOP AF
COMMISSIONER FOR PATENTS
P.O. BOX 1450
ALEXANDRIA, VA 22313-1450

RESPONSE L

Examiner Aponte:

In response to the final office action mailed January 5, 2023 (*Office Action*), please consider the following amendments and remarks. **Amendments to the specification** begins on page two, **claims** begin on page three. **Applicant's summary of the examiner interview** begins on page eight. The **remarks** begin on page nine and the **conclusion** is on page eleven.

IN THE SPECIFICATION

PLEASE AMEND THE TITLE AS FOLLOWS:

INTRAORAL DEVICE ~~WITH SLIT~~

IN THE CLAIMS

PLEASE AMEND THE CLAIMS AS FOLLOWS:

1. (currently amended) A mouthpiece comprising:

a main body having a first end opposite a second end, the main body having an interior space, wherein the main body is configured in a shape wider at the first end and narrower at the second end, and wherein the main body comprises:

a first wall defined by ~~one or more~~ a plurality of first edges, the first wall comprising a slit opening extending a longitudinal length parallel to a longitudinal and central axis of the main body, the longitudinal length extending from a middle location of the first wall away from the first end and toward the second end of the main body, the slit opening allowing fluids exterior to the interior space to enter along the longitudinal length into the interior space,

a second wall defined by ~~one or more~~ a plurality of second edges that correspond to the ~~one or more~~ first edges of the first wall, the second wall located at a distance from the first wall, the distance corresponding to a span of the interior space,

a connecting wall that connects [[the]] one ~~or more~~ of the first edges of the first wall to one of the corresponding second edges of the second wall across the span of the interior space between the first wall and the second wall, and

a bridge structure that includes a plurality of protrusions integral with and protruding from an interior surface of the second wall, the bridge structure extending through the interior space towards the first wall, wherein the bridge structure is not attached to the first wall, and wherein the plurality of protrusions of the bridge structure protrude in a wave shape comprising one or more crests and one or more troughs.

2. (previously presented) The mouthpiece of claim 1, wherein the second wall further includes a stability bar protruding from the interior surface of the second wall and along the longitudinal and central axis of the main body, the stability bar aligned with the slit opening.

3. (cancelled)

4. (previously presented) The mouthpiece of claim 1, wherein the main body is formed by injection-molding as one piece.

5. (previously presented) The mouthpiece of claim 1, wherein a material used to form the main body is a flexible, translucent, high heat-resistant, autoclavable silicone-based material.

6. (previously presented) The mouthpiece of claim 1, wherein the first wall and the second wall have different thicknesses.

7. (previously presented) The mouthpiece of claim 1, wherein flexibility of material of the first wall allows portions of the first wall to be pulled open at the slit opening to expose the interior space.

8. (previously presented) The mouthpiece of claim 1, further comprising a cheek retractor portion connected to the second end of the main body, the cheek retractor portion having a surface that applies pressure when bent, wherein the pressure is based on resilience of the cheek retractor portion.

9. (cancelled)

10. (previously presented) The mouthpiece of claim 1, wherein the plurality of protrusions of the bridge structure comprise a plurality of spaced contact points, and wherein spaces between the contact points are at troughs of the wave shape.

11. – 13. (cancelled)

14. (previously presented) The mouthpiece of claim 1, further comprising a suction connector portion configured to connect the interior space to a vacuum source.

15. (previously presented) The mouthpiece of claim 1, further comprising a mouth prop injection-molded in one piece.

16. (previously presented) The mouthpiece of claim 15, wherein the mouth prop is detachable and comprises a bite block portion and a strap portion.

17. - 20. (cancelled)

21. (currently amended) A mouthpiece comprising:

a main body having a first end opposite a second end, the first end wider than the second end, the main body comprising:

a first wall having a plurality of first edges and extending from the first end to the second end,

a second wall having a plurality of second edges and located at a distance from the first wall, the distance corresponding to a space between the first wall and the second wall, wherein the second wall also extends from the first end to the second end,

a connecting wall that connects one ~~or more~~ of the first edges of the first wall to one ~~or more corresponding~~ of the second edges of the second wall across the distance between the first wall and the second wall; and

a bridge structure that includes a plurality of protrusions integral with and protruding from an interior surface of the second wall, the bridge structure extending through the interior space towards the first wall, wherein the bridge structure is not attached to the first wall, and wherein the plurality of protrusions of the bridge structure protrude in a wave shape comprising one or more crests and one or more troughs;

a suction connector extending from the first end of the main body, wherein an evacuation conduit of the suction connector is in communication with the space between the first wall and the second wall, and wherein the suction connector includes a cutout shape configured to interlock with a corresponding protrusion shape of a vacuum adapter; and

a cheek retractor at the second end of the main body.

22. (previously presented) The mouthpiece of claim 21, wherein the plurality of protrusions of the bridge structure comprise a plurality of contact points corresponding to the crests of the wave shape, and wherein the troughs correspond to spaces between the contact points.

23. (previously presented) The mouthpiece of claim 21, wherein the first wall and the second wall are bendable, and wherein the bridge structure keeps the first wall separated from the second wall during suction.

24. (currently amended) The mouthpiece of claim 21, wherein at least one of the first wall and the second wall includes one or more perforations distributed along one or more of the first edges or along one or more of the second edges.

25. (previously presented) The mouthpiece of claim 21, further comprising a stability bar extending along a longitudinal axis of the main body between the first end and the second end, wherein a thickness of the stability bar reinforces a resilience of the main body.

26. (previously presented) The mouthpiece of claim 21, wherein the main body is formed by injection-molding as one piece.

27. (previously presented) The mouthpiece of claim 26, wherein at least one of the cheek retractor and suction connector is formed by injection-molding and integral with the main body.

28. (previously presented) The mouthpiece of claim 26, further comprising a stability bar extending along a longitudinal axis of the main body between the first end and the second end, wherein the stability bar is formed by injection-molding and integral with the main body.

29. (previously presented) The mouthpiece of claim 21, further comprising a mouth prop connected to the suction connector.

30. (previously presented) The mouthpiece of claim 21, wherein the suction connector includes a cutout configured to interlock with a corresponding protrusion of a vacuum adapter.

APPLICANT'S SUMMARY OF EXAMINER INTERVIEW

The Applicant's representative spoke with the Examiner on May 10, 2023 *(Interview*). During the *Interview*, the Applicant's representative and the Examiner discussed the response filed on March 31, 2023 and the Advisory Action received on April 12, 2023.

The examiner noted that the new claims presented in the amendment of March 31, 2023 were not entered and recommended that the Applicant file another after-final response without the new claims in order to expedite allowance of the present application. The Applicant hereby files the present after-final response in accordance with the recommendation by the examiner, but reserves the right *inter alia* to file the new claims in a continuation.

The Applicant and the Applicant's representative thank the Examiner for her time and courtesy during the *Interview*.

REMARKS

Status of the Claims

Claims 1, 2, 4-8, 10, 14-16, and 21-30 remain pending. Claim 1, 21, and 24 are amended herein. No new matter is added.

Rejections under 35 U.S.C. § 112

Claims 1, 2, 4-8, 10, 14-16 and 21-30 are rejected under 35 U.S.C. § 112(a) as purportedly failing to comply with the written description requirement. *Office Action*, 2. The *Office Action* refers specifically to the statement that "a set of holes may also form a mesh along the walls of the superior and inferior edges." *Id.* at 3. Such statement, however, merely refers to the location of the "mesh" at different sides of the mouthpiece, *e.g.*, in relation to a patient's mouth during usage. *See e.g., Specification*, [0035] ("Superior may be used herein to refer to the side that rests against a roof of a patient's mouth when placed therein, and inferior may be used to refer to the side that rests against the floor of the patient's mouth"); [0037] ("In addition, the main body portion 110 of the mouthpiece may include a plurality of holes 140 distributed along the superior and inferior sides of the anterior and posterior walls").

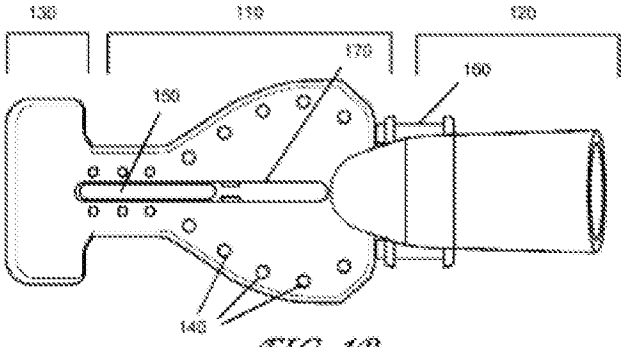

FIG. 1B

As illustrated in FIG. 1B (provided above), the "holes 140" are distributed to form a "mesh" within part of the main body portion 110, specifically located along certain sides of a wall of the main body portion 110 between the suction connector portion 120 and the cheek

retractor portion 130. *See id.* at [0034] ("The main body potion 110 may connect to a suction connector portion 120 on one end and a cheek retractor portion 130 at the other end").

Notwithstanding and in an effort to facilitate prosecution, the independent claims are amended to recite 'a first wall having a plurality of first edges' and 'a second wall having a plurality of second edges.' Dependent claim 24 is also amended for consistency with the same.

Based on the foregoing, Applicant respectfully requests that the rejections of the claims under 35 U.S.C. § 112(a) be withdrawn.

CONCLUSION

Based on the foregoing remarks, the Applicant respectfully contends that all outstanding rejections and objections have been overcome. Accordingly, it is respectfully submitted that the present application is in condition for allowance.

If the Examiner has any questions regarding the case, the Examiner is invited to contact the Applicant's undersigned representative.

Respectfully submitted,

May 10, 2023 By: /Tam Thanh Pham/

Tam Thanh Pham, Reg. No. 50,565
POLSINELLI *LLP*
3 Embarcadero Center, Suite 2400
San Francisco, CA 94111
Phone: (415) 248-2116
patentdocketing@polsinelli.com

Electronic Patent Application Fee Transmittal

Application Number:	14228057
Filing Date:	27-Mar-2014
Title of Invention:	INTRAORAL DEVICE
First Named Inventor/Applicant Name:	Thien Nguyen
Filer:	Ruby Lim Chung
Attorney Docket Number:	INCEP-001COD

Filed as Large Entity

Filing Fees for Utility under 35 USC 111(a)

Description	Fee Code	Quantity	Amount	Sub-Total in USD($)
Basic Filing:				
Pages:				
Claims:				
Miscellaneous-Filing:				
Petition:				
Patent-Appeals-and-Interference:				
Post-Allowance-and-Post-Issuance:				
Extension-of-Time:				

Description	Fee Code	Quantity	Amount	Sub-Total in USD($)
Extension - 2 months with $0 paid	1252	1	640	640
Miscellaneous:				
			Total in USD ($)	**640**

Electronic Acknowledgement Receipt

EFS ID:	47984039
Application Number:	14228057
International Application Number:	
Confirmation Number:	1983
Title of Invention:	INTRAORAL DEVICE
First Named Inventor/Applicant Name:	Thien Nguyen
Customer Number:	138718
Filer:	Ruby Lim Chung
Filer Authorized By:	
Attorney Docket Number:	INCEP-001COD
Receipt Date:	10-MAY-2023
Filing Date:	27-MAR-2014
Time Stamp:	21:10:57
Application Type:	Utility under 35 USC 111(a)

Payment information:

Submitted with Payment	yes
Payment Type	DA
Payment was successfully received in RAM	$640
RAM confirmation Number	E202350L11306807
Deposit Account	
Authorized User	

The Director of the USPTO is hereby authorized to charge indicated fees and credit any overpayment as follows:

File Listing:

Document Number	Document Description	File Name	File Size(Bytes)/ Message Digest	Multi Part /.zip	Pages (if appl.)
1		INCEP-001COD_Response_5-10-23.pdf	313906 6f0241a3de78ba59c0149f2e54a47be0fc83327f	yes	11

Multipart Description/PDF files in .zip description

Document Description	Start	End
Response After Final Action	1	1
Specification	2	2
Claims	3	7
Applicant summary of interview with examiner	8	8
Applicant Arguments/Remarks Made in an Amendment	9	11

Warnings:

Information:

2	Fee Worksheet (SB06)	fee-info.pdf	37908 7364696de335f03eef979a3280ba7f7da3083f22	no	2

Warnings:

Information:

Total Files Size (in bytes):	351814

This Acknowledgement Receipt evidences receipt on the noted date by the USPTO of the indicated documents, characterized by the applicant, and including page counts, where applicable. It serves as evidence of receipt similar to a Post Card, as described in MPEP 503.

New Applications Under 35 U.S.C. 111

If a new application is being filed and the application includes the necessary components for a filing date (see 37 CFR 1.53(b)-(d) and MPEP 506), a Filing Receipt (37 CFR 1.54) will be issued in due course and the date shown on this Acknowledgement Receipt will establish the filing date of the application.

National Stage of an International Application under 35 U.S.C. 371

If a timely submission to enter the national stage of an international application is compliant with the conditions of 35 U.S.C. 371 and other applicable requirements a Form PCT/DO/EO/903 indicating acceptance of the application as a national stage submission under 35 U.S.C. 371 will be issued in addition to the Filing Receipt, in due course.

New International Application Filed with the USPTO as a Receiving Office

If a new international application is being filed and the international application includes the necessary components for an international filing date (see PCT Article 11 and MPEP 1810), a Notification of the International Application Number and of the International Filing Date (Form PCT/RO/105) will be issued in due course, subject to prescriptions concerning national security, and the date shown on this Acknowledgement Receipt will establish the international filing date of the application.

Substitute for Form 1449/PTO	*Complete if Known*	
INFORMATION DISCLOSURE STATEMENT BY APPLICANT *(use as many sheets as necessary)*	Application Number	14/228,057
	Filing Date	March 27, 2014
	First Named Inventor:	Thien Nguyen
	Art Unit	3772
	Examiner Name	Mirayda A. Aponte
Sheet 2 of 2	Attorney Docket Number	INCEP-001COD

NON PATENT LITERATURE DOCUMENTS

Examiner Initials*	Cite No'	Include name of the author (in CAPITAL LETTERS), title of the article (when appropriate), title of the item (book, magazine, journal, serial, symposium, catalog, etc.), date, page(s), volume-issue number(s), publisher, city and/or country where published	T^2
		European Patent Application No. 20804801.7; Extended European Search Report dated 4/20/23	
		European Patent Application No. 20804801.7; Supplementary European Search Report dated 5/10/23	

Examiner Signature		Date Considered	

*Examiner: Initial if reference considered, whether or not citation is in conformance with MPEP 609. Draw line through citation if not in conformance and not considered. Include copy of this form with next communication to applicant.

'Applicant's unique citation designation number (optional). 'Applicant is to place a check mark here if English Translation is attached.

This collection of information is required by 37 CFR 1.98. The information is required to obtain or retain a benefit by the public which is to file (and by the USPTO to process) an application. Confidentiality is governed by 35 U.S.C. 122 and 37 CFR 1.14. This collection is estimated to take 2 hours to complete including gathering, preparing, and submitting the completed application form to the USPTO. Time will vary depending upon the individual case. Any comments on the amount of time you require to complete this form and/or suggestions for reducing this burden, should be sent to the Chief Information Officer, U.S. Patent and Trademark Office, P.O. Box 1450, Alexandria, VA 22313-1450. DO NOT SENT FEES OR COMPLETED FORMS TO THIS ADDRESS. **SEND TO: Commissioner for Patents, P.O. Box 1450, Alexandria, Virginia 22313-1450.**

If you need assistance in completing the form, call 1-800-PTO-9199 (1-800-786-9199) and select option 2.

Electronic Patent Application Fee Transmittal

Application Number:	14228057
Filing Date:	27-Mar-2014
Title of Invention:	INTRAORAL DEVICE
First Named Inventor/Applicant Name:	Thien Nguyen
Filer:	Ruby Lim Chung/Jasmine Han
Attorney Docket Number:	INCEP-001COD

Filed as Small Entity

Filing Fees for Utility under 35 USC 111(a)

Description	Fee Code	Quantity	Amount	Sub-Total in USD($)
Basic Filing:				
Pages:				
Claims:				
Miscellaneous-Filing:				
Petition:				
Patent-Appeals-and-Interference:				
Post-Allowance-and-Post-Issuance:				
Extension-of-Time:				

Description	Fee Code	Quantity	Amount	Sub-Total in USD($)
Miscellaneous:				
SUBMISSION- INFORMATION DISCLOSURE STMT	2806	1	104	104
		Total in USD ($)		**104**

Electronic Acknowledgement Receipt

EFS ID:	48111230
Application Number:	14228057
International Application Number:	
Confirmation Number:	1983
Title of Invention:	INTRAORAL DEVICE
First Named Inventor/Applicant Name:	Thien Nguyen
Customer Number:	138718
Filer:	Ruby Lim Chung/Jasmine Han
Filer Authorized By:	Ruby Lim Chung
Attorney Docket Number:	INCEP-001COD
Receipt Date:	06-JUN-2023
Filing Date:	27-MAR-2014
Time Stamp:	19:06:52
Application Type:	Utility under 35 USC 111(a)

Payment information:

Submitted with Payment	yes
Payment Type	DA
Payment was successfully received in RAM	$104
RAM confirmation Number	E202366J07075951
Deposit Account	
Authorized User	

The Director of the USPTO is hereby authorized to charge indicated fees and credit any overpayment as follows:

File Listing:

Document Number	Document Description	File Name	File Size(Bytes)/ Message Digest	Multi Part /.zip	Pages (if appl.)
1	Transmittal Letter	INCEP-001COD_IDS_Transmittal_6-6-23.pdf	99127 d4115233fe25f99bca9e0714090e4d7228bd107f	no	2
Warnings:					
Information:					
2	Information Disclosure Statement (IDS) Form (SB08)	INCEP-001COD_IDS_1449_6-6-23.pdf	41621 4188345257407761e74b41d81d127453e201a258	no	1
Warnings:					
Information:					
This is not an USPTO supplied IDS fillable form					
3	Non Patent Literature	N1_EESR_4-20-23.pdf	3512905 187e2f789109184e3f57dbc146f3841a2dd80526	no	7
Warnings:					
Information:					
4	Non Patent Literature	N2_Supp_EESR_5-10-23.pdf	44458 47dc29b4c7c6e87c54ed55aff771f8495a54db8f	no	1
Warnings:					
Information:					
5	Fee Worksheet (SB06)	fee-info.pdf	37637 df3d2afb4090c0a7696231574ce93af61c359bf6	no	2
Warnings:					
Information:					
		Total Files Size (in bytes):	3735748		

This Acknowledgement Receipt evidences receipt on the noted date by the USPTO of the indicated documents, characterized by the applicant, and including page counts, where applicable. It serves as evidence of receipt similar to a Post Card, as described in MPEP 503.

New Applications Under 35 U.S.C. 111

If a new application is being filed and the application includes the necessary components for a filing date (see 37 CFR 1.53(b)-(d) and MPEP 506), a Filing Receipt (37 CFR 1.54) will be issued in due course and the date shown on this Acknowledgement Receipt will establish the filing date of the application.

National Stage of an International Application under 35 U.S.C. 371

If a timely submission to enter the national stage of an international application is compliant with the conditions of 35 U.S.C. 371 and other applicable requirements a Form PCT/DO/EO/903 indicating acceptance of the application as a national stage submission under 35 U.S.C. 371 will be issued in addition to the Filing Receipt, in due course.

New International Application Filed with the USPTO as a Receiving Office

If a new international application is being filed and the international application includes the necessary components for an international filing date (see PCT Article 11 and MPEP 1810), a Notification of the International Application Number and of the International Filing Date (Form PCT/RO/105) will be issued in due course, subject to prescriptions concerning national security, and the date shown on this Acknowledgement Receipt will establish the international filing date of the application.

IN THE UNITED STATES PATENT AND TRADEMARK OFFICE

Group Art Unit: 3772	Examiner: Mirayda A. Aponte
Serial No.: 14/228,057	Filed: March 27, 2014
In re Application of: Thien Nguyen	
Confirmation No.: 1983	Customer No.: 138718
Title: INTRAORAL DEVICE	

SUPPLEMENTAL INFORMATION DISCLOSURE STATEMENT
Under 37 C.F.R. § 1.56 and 1.97-1.98

Examiner:

Pursuant to the provisions of 37 C.F.R. §§ 1.56 and 1.97-98 of the Rules of Practice in Patent Cases, enclosed herewith is form PTO-SB-08, listing several references. The Examiner is requested to make these references of official record in the application.

The references cited may be material to examination of the application and are submitted in compliance with the Applicant's duty of disclosure as defined by 37 C.F.R. § 1.56.

Applicants hereby declare, pursuant to 37 C.F.R. §1.97(e)(1), that each item of information contained in the information disclosure statement was first cited in any communication from a foreign patent office in a counterpart foreign application not more than three months prior to the filing of the information disclosure statement.

No representation is made or intended as to the completeness of this list, nor is the inclusion of any reference an admission that it is prior art or pertinent to this application.

The Commissioner is hereby authorized to charge information disclosure statement fees under 37 C.F.R. 1.17(p) as needed to Account Number 50-1662.

Respectfully submitted,
POLSINELLI LLP

Dated: June 6, 2023

By: /Ruby L. Chung/
Ruby L. Chung (Reg. No. 76,809)
Polsinelli LLP
Three Embarcadero Center, Suite 2400
San Francisco, CA 94111
415-248-2100 (Main)
patentdocketing@polsinelli.com

Issue Classification	Application/Control No.	Applicant(s)/Patent Under Reexamination
	14/228,057	Nguyen et al.
	Examiner	**Art Unit**
	MIRAYDA A APONTE	3772

CPC							
Symbol						**Type**	**Version**
A61C	/	17	/	0208		F	2013-01-01
A61C	/	17	/	08		I	2019-05-01

CPC Combination Sets								
Symbol					**Type**	**Set**	**Ranking**	**Version**
	/		/					

/MIRAYDA A APONTE/ Examiner, Art Unit 3772	25 May 2023	**Total Claims Allowed:**	
(Assistant Examiner)	(Date)	21	
/RALPH A LEWIS/ Primary Examiner, Art Unit 3772	31 May 2023	O.G. Print Claim(s)	O.G. Print Figure
(Primary Examiner)	(Date)	1	1A

U.S. Patent and Trademark Office — Part of Paper No.: 20230525

Issue Classification	Application/Control No.	Applicant(s)/Patent Under Reexamination
	14/228,057	Nguyen et al.
	Examiner	**Art Unit**
	MIRAYDA A APONTE	3772

INTERNATIONAL CLASSIFICATION					
CLAIMED					
A61C17/02	/	17	/	02	
A61C17/08	/	17	/	08	

NON-CLAIMED				
	/		/	

US ORIGINAL CLASSIFICATION	
CLASS	**SUBCLASS**

CROSS REFERENCES(S)						
CLASS	**SUBCLASS (ONE SUBCLASS PER BLOCK)**					

/MIRAYDA A APONTE/ Examiner, Art Unit 3772	25 May 2023	**Total Claims Allowed:**	
(Assistant Examiner)	(Date)	21	
/RALPH A LEWIS/ Primary Examiner, Art Unit 3772	31 May 2023	O.G. Print Claim(s)	O.G. Print Figure
(Primary Examiner)	(Date)	1	1A

U.S. Patent and Trademark Office — Part of Paper No.: 20230525

Issue Classification	Application/Control No.	Applicant(s)/Patent Under Reexamination
	14/228,057	Nguyen et al.
	Examiner	**Art Unit**
	MIRAYDA A APONTE	3772

☐ Claims renumbered in the same order as presented by applicant ☐ CPA ☐ T.D. ☐ R.1.47

CLAIMS

Final	Original	Final	Original	Final	Original	Final	Original	Final	Original	Final	Original	Final	Original	Final	Original
1	1	8	10		19	19	28								
2	2		11		20	20	29								
	3		12	12	21	21	30								
3	4		13	13	22										
4	5	9	14	14	23										
5	6	10	15	15	24										
6	7	11	16	16	25										
7	8		17	17	26										
	9		18	18	27										

/MIRAYDA A APONTE/ Examiner, Art Unit 3772	25 May 2023	**Total Claims Allowed:**	
(Assistant Examiner)	(Date)	21	
/RALPH A LEWIS/ Primary Examiner, Art Unit 3772	31 May 2023	O.G. Print Claim(s)	O.G. Print Figure
(Primary Examiner)	(Date)	1	1A

U.S. Patent and Trademark Office — Part of Paper No.: 20230525

Search Notes	Application/Control No.	Applicant(s)/Patent Under Reexamination
	14/228,057	Nguyen et al.
	Examiner	Art Unit
	MIRAYDA A APONTE	3772

CPC - Searched*		
Symbol	**Date**	**Examiner**
A61C 17/043, 046	11/16/2015	HDM
Updated Search	05/31/2016	HDM
Update Search	09/04/2018	HDM
Update Search	03/18/2019	HDM
Update Search	10/01/2019	HDM
Updated search	08/21/2022	MA
A61C17/08,0208,06,00,02	08/21/2022	MA
A61C5/90	08/21/2022	MA
A61B1/24	08/21/2022	MA
Updated search	12/29/2022	MA
Updated search	05/25/2023	MA

CPC Combination Sets - Searched*		
Symbol	**Date**	**Examiner**

US Classification - Searched*			
Class	**Subclass**	**Date**	**Examiner**
433	91-92, 140	11/16/2015	HDM
	Updated search	08/21/2022	NA
	Updated search	12/29/2022	MA
	Updated search	05/25/2023	MA

* See search history printout included with this form or the SEARCH NOTES box below to determine the scope of the search.

/MIRAYDA A APONTE/ Examiner, Art Unit 3772	

Search Notes	Application/Control No.	Applicant(s)/Patent Under Reexamination
	14/228,057	Nguyen et al.
	Examiner	Art Unit
	MIRAYDA A APONTE	3772

Search Notes		
Search Notes	**Date**	**Examiner**
Inventor Search	11/16/2015	HDM
Review searches of parent case 14/100323	11/16/2015	HDM
Updated Search	05/31/2016	HDM
Update Search	04/03/2017	HDM
Update Search	10/30/2017	HDM
Update Search	09/04/2018	HDM
Update Search	03/18/2019	HDM
Update Search	10/01/2019	HDM
Update Search	05/11/2020	HDM
Update Search	05/03/2021	HDM
Update Search	11/06/2021	HDM
PE2ESearch	08/21/2022	MA
Word search on retractor, tongue, (suction vacuum) AND (tongue retract*), (suction vacuum), dental AND cheek WITH retractor AND suction, cheek WITH retractor AND suction	08/21/2022	MA
Back and fourth search	08/21/2022	MA
EPO search	08/21/2022	MA
Updated word search	12/29/2022	MA
Word search on (suction vacuum) AND (tongue retract*) AND connection	05/25/2023	MA

Interference Search			
US Class/CPC Symbol	**US Subclass/CPC Group**	**Date**	**Examiner**
A61C17	043,046,08,0208,06,00,02	05/25/2023	MA
A61C5	90	05/25/2023	MA

/MIRAYDA A APONTE/ Examiner, Art Unit 3772	

Bibliographic Data

Application No: 14/228,057

Foreign Priority claimed: ○ Yes ◉ No

35 USC 119 (a-d) conditions met: ☐ Yes ☐ No ☐ Met After Allowance

Verified and Acknowledged: /MIRAYDA A APONTE/ (Examiner's Signature) ____ (Initials)

Title: INTRAORAL DEVICE

FILING or 371(c) DATE	CLASS	GROUP ART UNIT	ATTORNEY DOCKET NO.
03/27/2014	433	3772	
RULE			

APPLICANTS

SOLMETEX, LLC, Northborough, MA, UNITED STATES

INVENTORS

Thien Nguyen, Santa Ana, CA, UNITED STATES

Tam Thanh Pham, San Francisco, CA, UNITED STATES

CONTINUING DATA

This application is a CON of 14100323 12/09/2013 PAT 8911232

14100323 has PRO of 61734939 12/07/2012

FOREIGN APPLICATIONS

IF REQUIRED, FOREIGN LICENSE GRANTED**

04/18/2014

**** SMALL ENTITY ****

STATE OR COUNTRY

UNITED STATES

ADDRESS

FILING FEE RECEIVED

$730

PE2E SEARCH - Search History (Prior Art)

Ref #	Hits	Search Query	DBs	Default Operator	Plurals	British Equivalents	Time Stamp
L49	24458	(A61C17/043 OR A61C17/046 OR A61C5/90 OR A61B1/24 OR A61C17/08 OR A61C17/08 OR A61C17/0208 OR A61C17/06 OR A61C17/00 OR A61C17/02).cpc. OR (433/93).ccls.	(US-PGPUB; USPAT; USOCR; FIT (CN, FR, WO); FPRS; EPO; JPO; DERWENT; IBM_TDB)	OR	ON	ON	2022/12/29 08:46 AM
L51	8	("11576764" "11589969" "11589970" "20220378563").did.	(US-PGPUB; USPAT; USOCR; FIT (CN, FR, WO); FPRS; EPO; JPO; DERWENT; IBM_TDB)	OR	ON	ON	2023/05/25 09:05 AM
L52	1155	L49 AND (suction vacuum) AND (tongue retract*) AND connection	(US-PGPUB; USPAT; USOCR; FIT (CN, FR, WO); FPRS; EPO; JPO; DERWENT; IBM_TDB)	OR	ON	ON	2023/05/25 11:51 AM
L58	1724	(433/91-93,140).ccls.	(US-PGPUB; USPAT; USOCR; FIT (CN, FR, WO); FPRS; EPO; JPO; DERWENT; IBM_TDB)	OR	ON	ON	2023/05/25 02:10 PM
L59	174	L58 AND (suction vacuum) AND (tongue retract*) AND connection	(US-PGPUB; USPAT; USOCR; FIT (CN, FR, WO); FPRS; EPO; JPO; DERWENT; IBM_TDB)	OR	ON	ON	2023/05/25 02:11 PM
L60	69	L58 AND retractor AND (suction vacuum) AND (tongue retract*) AND connection	(US-PGPUB; USPAT; USOCR; FIT (CN, FR, WO); FPRS; EPO; JPO; DERWENT; IBM_TDB)	OR	ON	ON	2023/05/25 02:11 PM
L61	255	L49 AND retractor AND (suction vacuum) AND (tongue retract*) AND connection	(US-PGPUB; USPAT; USOCR; FIT (CN, FR, WO); FPRS; EPO; JPO; DERWENT; IBM_TDB)	OR	ON	ON	2023/05/25 02:11 PM

PE2E SEARCH - Search History (Interference)

Ref #	Hits	Search Query	DBs	Default Operator	Plurals	British Equivalents	Time Stamp
N1	4529	(A61C17/043 OR A61C17/046 OR A61C5/90 OR A61B1/24 OR A61C17/08 OR	(US-PGPUB; USPAT)	OR	ON	ON	2023/05/25 12:52 PM

		A61C17/08 OR A61C17/0208 OR A61C17/06 OR A61C17/00 OR A61C17/02).cpc.					
N2	549	N1 AND (suction vacuum) AND (tongue retract*) AND connection	(US-PGPUB; USPAT)	OR	ON	ON	2023/05/25 12:52 PM

Substitute for Form 1449/PTO

INFORMATION DISCLOSURE STATEMENT BY APPLICANT

(use as many sheets as necessary)

Complete if Known	
Application Number	14/228,057
Filing Date	March 27, 2014
First Named Inventor:	Thien Nguyen
Art Unit	3772
Examiner Name	Mirayda A. Aponte
Attorney Docket Number	INCEP-001COD

Sheet	1	of	2

U.S. PATENT DOCUMENTS

Examiner Initials*	Cite No.'	Document Number Number-Kind Code[2](If known)		Publication Date MM-DD-YYYY	Name of Patentee or Applicant of Cited Document	Pages, Columns, Lines, Where Relevant Passages or Relevant Figures Appear
		US-	11,576,764	2/14/2023	Nguyen	
		US-	11,589,969	2/28/2023	Nguyen	
		US-	11,589,970	2/28/2023	Nguyen	
		US-	2022/0378563	12/1/2022	Cao et al.	
		US-				
		US-				
		US-				
		US-				
		US-				
		US-				
		US-				
		US-				
		US-				

FOREIGN PATENT DOCUMENTS

Examiner Initials*	Cite No.'	Foreign Patent Document Country Code[3] Number[4] Kind Codes (if known)	Publication Date MM-DD-YYYY	Name of Patentee or Applicant of Cited Document	Pages, Columns, Lines, Where Relevant Passages or Relevant Figures Appear	T6

Examiner Signature	/MIRAYDA A APONTE/	Date Considered	05/25/2023

*EXAMINER: Initial if reference considered, whether or not citation is in conformance with MPEP 609; Draw line through citation if not in conformance and not considered. Include copy of this form with next communication to applicant. 'Applicant's unique citation designation number (optional). [2]See Kinds Codes of USPTO Patent Documents at www.uspto.gov or MPEP 901.04. [3]Enter Office that issued the document, by the two-letter code (WIPO Standard ST.3). [4]For Japanese patent documents, the indication of the year of reign of the Emperor must precede the serial number of the patent document. [5]Kind of document by the appropriate symbols as indicated on the document under WIPO Standard ST. 16 if possible. [6]Applicant is to place a check mark here if English language translation is attached.

This collection of information is required by 37 CFR 1.97 and 1.98. The information is required to obtain or retain a benefit by the public which is to file (and by the USPTO to process) an application. Confidentiality is governed by 35 U.S.C. 122 and 37 CFR 1.14. This collection is estimated to take 2 hours to complete including gathering, preparing, and submitting the completed application form to the USPTO. Time will vary depending upon the individual case. Any comments on the amount of time you require to complete this form and/or suggestions for reducing this burden, should be sent to the Chief Information Officer, U.S. Patent and Trademark Office, P.O. Box 1450, Alexandria, VA 22313-1450. DO NOT SENT FEES OR COMPLETED FORMS TO THIS ADDRESS. **SEND TO: Commissioner for Patents, P.O. Box 1450, Alexandria, Virginia 22313-1450.**

If you need assistance in completing the form, call 1-800-PTO-9199 (1-800-786-9199) and select option 2.

Based on Form PTO/SB/08A (08-03)

ALL REFERENCES CONSIDERED EXCEPT WHERE LINED THROUGH. /M.A.A/

Substitute for Form 1449/PTO	Complete if Known	
INFORMATION DISCLOSURE STATEMENT BY APPLICANT *(use as many sheets as necessary)*	Application Number	14/228,057
	Filing Date	March 27, 2014
	First Named Inventor:	Thien Nguyen
	Art Unit	3772
	Examiner Name	Mirayda A. Aponte
Sheet 2 of 2	Attorney Docket Number	INCEP-001COD

NON PATENT LITERATURE DOCUMENTS

Examiner Initials*	Cite No'	Include name of the author (in CAPITAL LETTERS), title of the article (when appropriate), title of the item (book, magazine, journal, serial, symposium, catalog, etc.), date, page(s), volume-issue number(s), publisher, city and/or country where published	T^2
		Docket No. INCEP-005 U.S. Patent Application 16/870,745 Office Action mailed 2/17/23	

Examiner Signature	/MIRAYDA A APONTE/	Date Considered	05/25/2023

*Examiner: Initial if reference considered, whether or not citation is in conformance with MPEP 609. Draw line through citation if not in conformance and not considered. Include copy of this form with next communication to applicant.

'Applicant's unique citation designation number (optional). 'Applicant is to place a check mark here if English Translation is attached.

This collection of information is required by 37 CFR 1.98. The information is required to obtain or retain a benefit by the public which is to file (and by the USPTO to process) an application. Confidentiality is governed by 35 U.S.C. 122 and 37 CFR 1.14. This collection is estimated to take 2 hours to complete including gathering, preparing, and submitting the completed application form to the USPTO. Time will vary depending upon the individual case. Any comments on the amount of time you require to complete this form and/or suggestions for reducing this burden, should be sent to the Chief Information Officer, U.S. Patent and Trademark Office, P.O. Box 1450, Alexandria, VA 22313-1450. DO NOT SENT FEES OR COMPLETED FORMS TO THIS ADDRESS. **SEND TO: Commissioner for Patents, P.O. Box 1450, Alexandria, Virginia 22313-1450.**

If you need assistance in completing the form, call 1-800-PTO-9199 (1-800-786-9199) and select option 2.

Based on Form PTO/SB/08B (08-03)

ALL REFERENCES CONSIDERED EXCEPT WHERE LINED THROUGH. /M.A.A/

OK TO ENTER: /M.A.A/

06/02/2023

IN THE UNITED STATES PATENT AND TRADEMARK OFFICE

APPLICANT:	Solmetex, LLC
INVENTOR(S):	Thien Nguyen, et al.
APPLICATION NO.:	14/228,057
FILED:	March 27, 2014
TITLE:	INTRAORAL DEVICE (as amended)
EXAMINER:	Mirayda Arlene Aponte
ART UNIT:	3772
CONF. NO.:	1983
ATTY.DKT.NO.:	INCEP-001COD

MAIL STOP AF
COMMISSIONER FOR PATENTS
P.O. BOX 1450
ALEXANDRIA, VA 22313-1450

RESPONSE L

Examiner Aponte:

In response to the final office action mailed January 5, 2023 (*Office Action*), please consider the following amendments and remarks. **Amendments to the specification** begins on page two, **claims** begin on page three. **Applicant's summary of the examiner interview** begins on page eight. The **remarks** begin on page nine and the **conclusion** is on page eleven.

Substitute for Form 1449/PTO

INFORMATION DISCLOSURE STATEMENT BY APPLICANT

(use as many sheets as necessary)

Complete if Known	
Application Number	14/228,057
Filing Date	March 27, 2014
First Named Inventor:	Thien Nguyen
Art Unit	3732
Examiner Name	Hao D. Mai
Attorney Docket Number	INCEP-001COD

Sheet	1	of	1

U.S. PATENT DOCUMENTS

Examiner Initials*	Cite No.[1]	Document Number Number-Kind Code[2] (If known)		Publication Date MM-DD-YYYY	Name of Patentee or Applicant of Cited Document	Pages, Columns, Lines, Where Relevant Passages or Relevant Figures Appear
		US-	D734,851	7/21/2015	Nguyen	
		US-				
		US-				
		US-				
		US-				
		US-				
		US-				
		US-				
		US-				
		US-				
		US-				

FOREIGN PATENT DOCUMENTS

Examiner Initials*	Cite No.[1]	Foreign Patent Document Country Code[3] Number[4] Kind Code[5] (if known)	Publication Date MM-DD-YYYY	Name of Patentee or Applicant of Cited Document	Pages, Columns, Lines, Where Relevant Passages or Relevant Figures Appear	T[6]
		WO 2015/088577	6/18/2015	Incept, Inc.		

Examiner Signature	/MIRAYDA A APONTE/	Date Considered	05/25/2023

*EXAMINER: Initial if reference considered, whether or not citation is in conformance with MPEP 609; Draw line through citation if not in conformance and not considered. Include copy of this form with next communication to applicant. [1]Applicant's unique citation designation number (optional). [2]See Kinds Codes of USPTO Patent Documents at www.uspto.gov or MPEP 901.04. [3]Enter Office that issued the document, by the two-letter code (WIPO Standard ST.3). [4]For Japanese patent documents, the indication of the year of reign of the Emperor must precede the serial number of the patent document. [5]Kind of document by the appropriate symbols as indicated on the document under WIPO Standard ST. 16 if possible. [6]Applicant is to place a check mark here if English language translation is attached.

This collection of information is required by 37 CFR 1.97 and 1.98. The information is required to obtain or retain a benefit by the public which is to file (and by the USPTO to process) an application. Confidentiality is governed by 35 U.S.C. 122 and 37 CFR 1.14. This collection is estimated to take 2 hours to complete including gathering, preparing, and submitting the completed application form to the USPTO. Time will vary depending upon the individual case. Any comments on the amount of time you require to complete this form and/or suggestions for reducing this burden, should be sent to the Chief Information Officer, U.S. Patent and Trademark Office, P.O. Box 1450, Alexandria, VA 22313-1450. DO NOT SEND FEES OR COMPLETED FORMS TO THIS ADDRESS.

SEND TO: Commissioner for Patents, P.O. Box 1450, Alexandria, Virginia 22313-1450.

If you need assistance in completing the form, call 1-800-PTO-9199 (1-800-786-9199) and select option 2.

Based on Form PTO/SB/08A (08-03)

ALL REFERENCES CONSIDERED EXCEPT WHERE LINED THROUGH. /M.A.A/

UNITED STATES PATENT AND TRADEMARK OFFICE

UNITED STATES DEPARTMENT OF COMMERCE
United States Patent and Trademark Office
Address: COMMISSIONER FOR PATENTS
P.O. Box 1450
Alexandria, Virginia 22313-1450
www.uspto.gov

NOTICE OF ALLOWANCE AND FEE(S) DUE

138718 7590 06/07/2023

Polsinelli LLP
PO Box 140310
Kansas City, MO 64114-0310

EXAMINER	
APONTE, MIRAYDA ARLENE	
ART UNIT	PAPER NUMBER
3772	

DATE MAILED: 06/07/2023

APPLICATION NO.	FILING DATE	FIRST NAMED INVENTOR	ATTORNEY DOCKET NO.	CONFIRMATION NO.
14/228,057	03/27/2014	Thien Nguyen	INCEP-001COD	1983

TITLE OF INVENTION: INTRAORAL DEVICE

APPLN. TYPE	ENTITY STATUS	ISSUE FEE DUE	PUBLICATION FEE DUE	PREV. PAID ISSUE FEE	TOTAL FEE(S) DUE	DATE DUE
nonprovisional	SMALL	$480	$0.00	$0.00	$480	09/07/2023

THE APPLICATION IDENTIFIED ABOVE HAS BEEN EXAMINED AND IS ALLOWED FOR ISSUANCE AS A PATENT. PROSECUTION ON THE MERITS IS CLOSED. THIS NOTICE OF ALLOWANCE IS NOT A GRANT OF PATENT RIGHTS. THIS APPLICATION IS SUBJECT TO WITHDRAWAL FROM ISSUE AT THE INITIATIVE OF THE OFFICE OR UPON PETITION BY THE APPLICANT. SEE 37 CFR 1.313 AND MPEP 1308.

THE ISSUE FEE AND PUBLICATION FEE (IF REQUIRED) MUST BE PAID WITHIN THREE MONTHS FROM THE MAILING DATE OF THIS NOTICE OR THIS APPLICATION SHALL BE REGARDED AS ABANDONED. THIS STATUTORY PERIOD CANNOT BE EXTENDED. SEE 35 U.S.C. 151. THE ISSUE FEE DUE INDICATED ABOVE DOES NOT REFLECT A CREDIT FOR ANY PREVIOUSLY PAID ISSUE FEE IN THIS APPLICATION. IF AN ISSUE FEE HAS PREVIOUSLY BEEN PAID IN THIS APPLICATION (AS SHOWN ABOVE), THE RETURN OF PART B OF THIS FORM WILL BE CONSIDERED A REQUEST TO REAPPLY THE PREVIOUSLY PAID ISSUE FEE TOWARD THE ISSUE FEE NOW DUE.

HOW TO REPLY TO THIS NOTICE:

I. Review the ENTITY STATUS shown above. If the ENTITY STATUS is shown as SMALL or MICRO, verify whether entitlement to that entity status still applies.

If the ENTITY STATUS is the same as shown above, pay the TOTAL FEE(S) DUE shown above.

If the ENTITY STATUS is changed from that shown above, on PART B - FEE(S) TRANSMITTAL, complete section number 5 titled "Change in Entity Status (from status indicated above)".

For purposes of this notice, small entity fees are 40% the amount of undiscounted fees, and micro entity fees are 20% the amount of undiscounted fees.

II. PART B - FEE(S) TRANSMITTAL, or its equivalent, must be completed and returned to the United States Patent and Trademark Office (USPTO) with your ISSUE FEE and PUBLICATION FEE (if required). If you are charging the fee(s) to your deposit account, section "4b" of Part B - Fee(s) Transmittal should be completed. If an equivalent of Part B is filed, a request to reapply a previously paid issue fee must be clearly made, and delays in processing may occur due to the difficulty in recognizing the paper as an equivalent of Part B.

III. All communications regarding this application must give the application number. Please direct all communications prior to issuance to Mail Stop ISSUE FEE unless advised to the contrary.

IMPORTANT REMINDER: Maintenance fees are due in utility patents issuing on applications filed on or after Dec. 12, 1980. It is patentee's responsibility to ensure timely payment of maintenance fees when due. More information is available at www.uspto.gov/PatentMaintenanceFees.

PART B - FEE(S) TRANSMITTAL

Complete and send this form, together with applicable fee(s), by mail or fax, or via EFS-Web.

By mail, send to: Mail Stop ISSUE FEE
Commissioner for Patents
P.O. Box 1450
Alexandria, Virginia 22313-1450

By fax, send to: (571)-273-2885

INSTRUCTIONS: This form should be used for transmitting the ISSUE FEE and PUBLICATION FEE (if required). Blocks 1 through 5 should be completed where appropriate. All further correspondence will be mailed to the current correspondence address as indicated unless corrected below or directed otherwise in Block 1, by (a) specifying a new correspondence address; and/or (b) indicating a separate "FEE ADDRESS" for maintenance fee notifications. **Because electronic patent issuance may occur shortly after issue fee payment, any desired continuing application should preferably be filed prior to payment of this issue fee in order not to jeopardize copendency.**

CURRENT CORRESPONDENCE ADDRESS (Note: Use Block 1 for any change of address)

138718 7590 06/07/2023
Polsinelli LLP
PO Box 140310
Kansas City, MO 64114-0310

Note: A certificate of mailing can only be used for domestic mailings of the Fee(s) Transmittal. This certificate cannot be used for any other accompanying papers. Each additional paper, such as an assignment or formal drawing, must have its own certificate of mailing or transmission.

Certificate of Mailing or Transmission

I hereby certify that this Fee(s) Transmittal is being deposited with the United States Postal Service with sufficient postage for first class mail in an envelope addressed to the Mail Stop ISSUE FEE address above, or being transmitted to the USPTO via EFS-Web or by facsimile to (571) 273-2885, on the date below.

(Typed or printed name)
(Signature)
(Date)

APPLICATION NO.	FILING DATE	FIRST NAMED INVENTOR	ATTORNEY DOCKET NO.	CONFIRMATION NO.
14/228,057	03/27/2014	Thien Nguyen	INCEP-001COD	1983

TITLE OF INVENTION: INTRAORAL DEVICE

APPLN. TYPE	ENTITY STATUS	ISSUE FEE DUE	PUBLICATION FEE DUE	PREV. PAID ISSUE FEE	TOTAL FEE(S) DUE	DATE DUE
nonprovisional	SMALL	$480	$0.00	$0.00	$480	09/07/2023

EXAMINER	ART UNIT	CLASS-SUBCLASS
APONTE, MIRAYDA ARLENE	3772	433-093000

1. Change of correspondence address or indication of "Fee Address" (37 CFR 1.363).

❑ Change of correspondence address (or Change of Correspondence Address form PTO/AIA/122 or PTO/SB/122) attached.

❑ "Fee Address" indication (or "Fee Address" Indication form PTO/AIA/47 or PTO/SB/47; Rev 03-02 or more recent) attached. **Use of a Customer Number is required.**

2. For printing on the patent front page, list
(1) The names of up to 3 registered patent attorneys or agents OR, alternatively,
(2) The name of a single firm (having as a member a registered attorney or agent) and the names of up to 2 registered patent attorneys or agents. If no name is listed, no name will be printed.

1 _____
2 _____
3 _____

3. ASSIGNEE NAME AND RESIDENCE DATA TO BE PRINTED ON THE PATENT (print or type)

PLEASE NOTE: Unless an assignee is identified below, no assignee data will appear on the patent. If an assignee is identified below, the document must have been previously recorded, or filed for recordation, as set forth in 37 CFR 3.11 and 37 CFR 3.81(a). Completion of this form is NOT a substitute for filing an assignment.

(A) NAME OF ASSIGNEE (B) RESIDENCE: (CITY and STATE OR COUNTRY)

Please check the appropriate assignee category or categories (will not be printed on the patent) : ❑ Individual ❑ Corporation or other private group entity ❑ Government

4a. Fees submitted: ❑ Issue Fee ❑ Publication Fee (if required)

4b. Method of Payment: *(Please first reapply any previously paid fee shown above)*

❑ Electronic Payment via Patent Center or EFS-Web ❑ Enclosed check ❑ Non-electronic payment by credit card (Attach form PTO-2038)

❑ The Director is hereby authorized to charge the required fee(s), any deficiency, or credit any overpayment to Deposit Account No. _____

5. **Change in Entity Status** (from status indicated above)

❑ Applicant certifying micro entity status. See 37 CFR 1.29

NOTE: Absent a valid certification of Micro Entity Status (see forms PTO/SB/15A and 15B), issue fee payment in the micro entity amount will not be accepted at the risk of application abandonment.

❑ Applicant asserting small entity status. See 37 CFR 1.27

NOTE: If the application was previously under micro entity status, checking this box will be taken to be a notification of loss of entitlement to micro entity status.

❑ Applicant changing to regular undiscounted fee status.

NOTE: Checking this box will be taken to be a notification of loss of entitlement to small or micro entity status, as applicable.

NOTE: This form must be signed in accordance with 37 CFR 1.31 and 1.33. See 37 CFR 1.4 for signature requirements and certifications.

Authorized Signature _____ Date _____

Typed or printed name _____ Registration No. _____

UNITED STATES PATENT AND TRADEMARK OFFICE

UNITED STATES DEPARTMENT OF COMMERCE
United States Patent and Trademark Office
Address: COMMISSIONER FOR PATENTS
P.O. Box 1450
Alexandria, Virginia 22313-1450
www.uspto.gov

APPLICATION NO.	FILING DATE	FIRST NAMED INVENTOR	ATTORNEY DOCKET NO.	CONFIRMATION NO.
14/228,057	03/27/2014	Thien Nguyen	INCEP-001COD	1983

138718 7590 06/07/2023

Polsinelli LLP
PO Box 140310
Kansas City, MO 64114-0310

EXAMINER	
APONTE, MIRAYDA ARLENE	
ART UNIT	PAPER NUMBER
3772	

DATE MAILED: 06/07/2023

Determination of Patent Term Adjustment under 35 U.S.C. 154 (b)
(Applications filed on or after May 29, 2000)

The Office has discontinued providing a Patent Term Adjustment (PTA) calculation with the Notice of Allowance.

Section 1(h)(2) of the AIA Technical Corrections Act amended 35 U.S.C. 154(b)(3)(B)(i) to eliminate the requirement that the Office provide a patent term adjustment determination with the notice of allowance. See Revisions to Patent Term Adjustment, 78 Fed. Reg. 19416, 19417 (Apr. 1, 2013). Therefore, the Office is no longer providing an initial patent term adjustment determination with the notice of allowance. The Office will continue to provide a patent term adjustment determination with the Issue Notification Letter that is mailed to applicant approximately three weeks prior to the issue date of the patent, and will include the patent term adjustment on the patent. Any request for reconsideration of the patent term adjustment determination (or reinstatement of patent term adjustment) should follow the process outlined in 37 CFR 1.705.

Any questions regarding the Patent Term Extension or Adjustment determination should be directed to the Office of Patent Legal Administration at (571)-272-7702. Questions relating to issue and publication fee payments should be directed to the Customer Service Center of the Office of Patent Publication at 1-(888)-786-0101 or (571)-272-4200.

OMB Clearance and PRA Burden Statement for PTOL-85 Part B

The Paperwork Reduction Act (PRA) of 1995 requires Federal agencies to obtain Office of Management and Budget approval before requesting most types of information from the public. When OMB approves an agency request to collect information from the public, OMB (i) provides a valid OMB Control Number and expiration date for the agency to display on the instrument that will be used to collect the information and (ii) requires the agency to inform the public about the OMB Control Number's legal significance in accordance with 5 CFR 1320.5(b).

The information collected by PTOL-85 Part B is required by 37 CFR 1.311. The information is required to obtain or retain a benefit by the public which is to file (and by the USPTO to process) an application. Confidentiality is governed by 35 U.S.C. 122 and 37 CFR 1.14. This collection is estimated to take 30 minutes to complete, including gathering, preparing, and submitting the completed application form to the USPTO. Time will vary depending upon the individual case. Any comments on the amount of time you require to complete this form and/or suggestions for reducing this burden, should be sent to the Chief Information Officer, U.S. Patent and Trademark Office, U.S. Department of Commerce, P.O. Box 1450, Alexandria, Virginia 22313-1450. DO NOT SEND FEES OR COMPLETED FORMS TO THIS ADDRESS. SEND TO: Commissioner for Patents, P.O. Box 1450, Alexandria, Virginia 22313-1450. Under the Paperwork Reduction Act of 1995, no persons are required to respond to a collection of information unless it displays a valid OMB control number.

Privacy Act Statement

The Privacy Act of 1974 (P.L. 93-579) requires that you be given certain information in connection with your submission of the attached form related to a patent application or patent. Accordingly, pursuant to the requirements of the Act, please be advised that: (1) the general authority for the collection of this information is 35 U.S.C. 2(b)(2); (2) furnishing of the information solicited is voluntary; and (3) the principal purpose for which the information is used by the U.S. Patent and Trademark Office is to process and/or examine your submission related to a patent application or patent. If you do not furnish the requested information, the U.S. Patent and Trademark Office may not be able to process and/or examine your submission, which may result in termination of proceedings or abandonment of the application or expiration of the patent.

The information provided by you in this form will be subject to the following routine uses:

1. The information on this form will be treated confidentially to the extent allowed under the Freedom of Information Act (5 U.S.C. 552) and the Privacy Act (5 U.S.C 552a). Records from this system of records may be disclosed to the Department of Justice to determine whether disclosure of these records is required by the Freedom of Information Act.
2. A record from this system of records may be disclosed, as a routine use, in the course of presenting evidence to a court, magistrate, or administrative tribunal, including disclosures to opposing counsel in the course of settlement negotiations.
3. A record in this system of records may be disclosed, as a routine use, to a Member of Congress submitting a request involving an individual, to whom the record pertains, when the individual has requested assistance from the Member with respect to the subject matter of the record.
4. A record in this system of records may be disclosed, as a routine use, to a contractor of the Agency having need for the information in order to perform a contract. Recipients of information shall be required to comply with the requirements of the Privacy Act of 1974, as amended, pursuant to 5 U.S.C. 552a(m).
5. A record related to an International Application filed under the Patent Cooperation Treaty in this system of records may be disclosed, as a routine use, to the International Bureau of the World Intellectual Property Organization, pursuant to the Patent Cooperation Treaty.
6. A record in this system of records may be disclosed, as a routine use, to another federal agency for purposes of National Security review (35 U.S.C. 181) and for review pursuant to the Atomic Energy Act (42 U.S.C. 218(c)).
7. A record from this system of records may be disclosed, as a routine use, to the Administrator, General Services, or his/her designee, during an inspection of records conducted by GSA as part of that agency's responsibility to recommend improvements in records management practices and programs, under authority of 44 U.S.C. 2904 and 2906. Such disclosure shall be made in accordance with the GSA regulations governing inspection of records for this purpose, and any other relevant (i.e., GSA or Commerce) directive. Such disclosure shall not be used to make determinations about individuals.
8. A record from this system of records may be disclosed, as a routine use, to the public after either publication of the application pursuant to 35 U.S.C. 122(b) or issuance of a patent pursuant to 35 U.S.C. 151. Further, a record may be disclosed, subject to the limitations of 37 CFR 1.14, as a routine use, to the public if the record was filed in an application which became abandoned or in which the proceedings were terminated and which application is referenced by either a published application, an application open to public inspection or an issued patent.
9. A record from this system of records may be disclosed, as a routine use, to a Federal, State, or local law enforcement agency, if the USPTO becomes aware of a violation or potential violation of law or regulation.

Notice of Allowability	Application No. 14/228,057	Applicant(s) Nguyen et al.	
	Examiner MIRAYDA A APONTE	Art Unit 3772	AIA (FITF) Status No

-- The MAILING DATE of this communication appears on the cover sheet with the correspondence address--

All claims being allowable, PROSECUTION ON THE MERITS IS (OR REMAINS) CLOSED in this application. If not included herewith (or previously mailed), a Notice of Allowance (PTOL-85) or other appropriate communication will be mailed in due course. **THIS NOTICE OF ALLOWABILITY IS NOT A GRANT OF PATENT RIGHTS.** This application is subject to withdrawal from issue at the initiative of the Office or upon petition by the applicant. See 37 CFR 1.313 and MPEP 1308.

1. ☑ This communication is responsive to 10 May 2023.
   ☐ A declaration(s)/affidavit(s) under **37 CFR 1.130(b)** was/were filed on _____.

2. ☐ An election was made by the applicant in response to a restriction requirement set forth during the interview on _____; the restriction requirement and election have been incorporated into this action.

3. ☑ The allowed claim(s) is/are See Continuation Sheet . As a result of the allowed claim(s), you may be eligible to benefit from the **Patent Prosecution Highway** program at a participating intellectual property office for the corresponding application. For more information, please see **http://www.uspto.gov/patents/init_events/pph/index.jsp** or send an inquiry to **PPHfeedback@uspto.gov.**

4. ☐ Acknowledgment is made of a claim for foreign priority under 35 U.S.C. § 119(a)-(d) or (f).

   Certified copies:

   a) ☐ All b) ☐ Some* c) ☐ None of the:

   1. ☐ Certified copies of the priority documents have been received.
   2. ☐ Certified copies of the priority documents have been received in Application No. _____ .
   3. ☐ Copies of the certified copies of the priority documents have been received in this national stage application from the International Bureau (PCT Rule 17.2(a)).

   * Certified copies not received: _____ .

Applicant has THREE MONTHS FROM THE "MAILING DATE" of this communication to file a reply complying with the requirements noted below. Failure to timely comply will result in ABANDONMENT of this application.
THIS THREE-MONTH PERIOD IS NOT EXTENDABLE.

5. ☐ CORRECTED DRAWINGS (as "replacement sheets") must be submitted.
   ☐ including changes required by the attached Examiner's Amendment / Comment or in the Office action of Paper No./Mail Date _____ .

   Identifying indicia such as the application number (see 37 CFR 1.84(c)) should be written on the drawings in the front (not the back) of each sheet. Replacement sheet(s) should be labeled as such in the header according to 37 CFR 1.121(d).

6. ☐ DEPOSIT OF and/or INFORMATION about the deposit of BIOLOGICAL MATERIAL must be submitted. Note the attached Examiner's comment regarding REQUIREMENT FOR THE DEPOSIT OF BIOLOGICAL MATERIAL.

Attachment(s)

1. ☐ Notice of References Cited (PTO-892)
2. ☑ Information Disclosure Statements (PTO/SB/08), Paper No./Mail Date _____.
3. ☐ Examiner's Comment Regarding Requirement for Deposit of Biological Material _____.
4. ☐ Interview Summary (PTO-413), Paper No./Mail Date. _____.
5. ☐ Examiner's Amendment/Comment
6. ☑ Examiner's Statement of Reasons for Allowance
7. ☐ Other _____.

/MIRAYDA A APONTE/ Examiner, Art Unit 3772	/RALPH A LEWIS/ Primary Examiner, Art Unit 3772

Continuation of 3. The allowed claim(s) is/are: 1-2,4-8,10,14-16 and 21-30

DETAILED ACTION

Allowable Subject Matter

1. **Claims 1, 2, 4-8, 10, 14-16 and 21-30** are allowed.

2. The following is an examiner's statement of reasons for allowance:

a. **Regarding claim 1**, the amendment to the claim fixes the 112(a) issues presented in the last Office action of 5 January 2023.

b. Therefore, the art of record does not teach or render obvious, either alone or in combination, a mouthpiece including a main body including a first wall defined by a plurality of first edges and a second wall defined by a plurality of second edges, and a connecting wall that connects one of the first edges of the first wall to one of the corresponding second edges of the second wall across the span of the interior space between the first wall and second wall in combination with the elements set forth in the claim.

c. **Regarding claim 21**, the amendment to the claim fixes the 112(a) issues presented in the last Office action of 5 January 2023.

d. Therefore, the art of record does not teach or render obvious, either alone or in combination, a mouthpiece including a main body including a first wall having a plurality of first edges and extending from the first end to the second end, a second wall having a plurality of second edges and located at a distance from the first wall corresponding to a space between the first wall and the second wall, and a connecting wall that connects one of the first edges of the first wall to one of the second edges of the second wall across the distance between the first wall and the second wall in combination with the elements set forth in the claim.

3. Any comments considered necessary by applicant must be submitted no later than the payment of the issue fee and, to avoid processing delays, should preferably accompany the issue fee. Such submissions should be clearly labeled "Comments on Statement of Reasons for Allowance."

Conclusion

4. Any inquiry concerning this communication or earlier communications from the examiner should be directed to MIRAYDA ARLENE APONTE whose telephone number is (571)270-1933. The examiner can normally be reached M-F 8-5.

5. Examiner interviews are available via telephone, in-person, and video conferencing using a USPTO supplied web-based collaboration tool. To schedule an interview, applicant is encouraged to use the USPTO Automated Interview Request (AIR) at http://www.uspto.gov/interviewpractice.

6. If attempts to reach the examiner by telephone are unsuccessful, the examiner's supervisor, Cris Rodriguez can be reached on 571-272-4964. The fax phone number for the organization where this application or proceeding is assigned is 571-273-8300.

7. Information regarding the status of published or unpublished applications may be obtained from Patent Center. Unpublished application information in Patent Center is available to registered users. To file and manage patent submissions in Patent Center, visit: https://patentcenter.uspto.gov. Visit https://www.uspto.gov/patents/apply/patent-center for more information about Patent Center and https://www.uspto.gov/patents/docx for information about filing in DOCX format. For additional questions, contact the

Electronic Business Center (EBC) at 866-217-9197 (toll-free). If you would like assistance from a USPTO Customer Service Representative, call 800-786-9199 (IN USA OR CANADA) or 571-272-1000.

/MIRAYDA A APONTE/
Examiner, Art Unit 3772

/RALPH A LEWIS/
Primary Examiner, Art Unit 3772

FEE ADDRESS INDICATION FORM

Application Number	14228057	Art Unit	3772
Filing Date	27-Mar-2014	Examiner Name	MIRAYDA APONTE
First Name Inventor	Thien Nguyen	Attorney Doc. Number	INCEP-001COD

INSTRUCTIONS: In order for the fee address identified on this form to be effective, the issue fee must have been paid for the application listed on this form. Only an address represented by a customer number can be established as the fee address for maintenance fee purposes (hereafter, fee address). A fee address should be established when correspondence related to maintenance fees should be mailed to a different address than the correspondence address for the application. For more information on customer numbers, see the Manual of Patent Examining Procedure (MPEP) § 403.

Please recognize as the Fee Address under the provisions of 37 CFR 1.363 the address associated with:

Customer Number:	138718

Signature :

I certify, in accordance with 37 CFR 1.4(d)(4) that I am an attorney or agent registered to practice before the Patent and Trademark Office who has filed and has been granted power of attorney in this application.

Signature	/Tam Thanh Pham/	**Date**	06-13-2023
Name	TamThanh Thi Pham	**Registration Number**	50565

Electronic Patent Application Fee Transmittal

Application Number:	14228057
Filing Date:	27-Mar-2014
Title of Invention:	INTRAORAL DEVICE
First Named Inventor/Applicant Name:	Thien Nguyen
Filer:	TamThanh Thi Pham/Bindi Patel
Attorney Docket Number:	INCEP-001COD

Filed as Small Entity

Filing Fees for Utility under 35 USC 111(a)

Description	Fee Code	Quantity	Amount	Sub-Total in USD($)
Basic Filing:				
Pages:				
Claims:				
Miscellaneous-Filing:				
Petition:				
Patent-Appeals-and-Interference:				
Post-Allowance-and-Post-Issuance:				
UTILITY APPL ISSUE FEE	2501	1	480	480

Description	Fee Code	Quantity	Amount	Sub-Total in USD($)
Extension-of-Time:				
Miscellaneous:				
			Total in USD ($)	**480**

Electronic Acknowledgement Receipt

EFS ID:	48145745
Application Number:	14228057
International Application Number:	
Confirmation Number:	1983
Title of Invention:	INTRAORAL DEVICE
First Named Inventor/Applicant Name:	Thien Nguyen
Customer Number:	138718
Filer:	TamThanh Thi Pham/Bindi Patel
Filer Authorized By:	TamThanh Thi Pham
Attorney Docket Number:	INCEP-001COD
Receipt Date:	13-JUN-2023
Filing Date:	27-MAR-2014
Time Stamp:	17:14:48
Application Type:	Utility under 35 USC 111(a)

Payment information:

Submitted with Payment	yes
Payment Type	DA
Payment was successfully received in RAM	$480
RAM confirmation Number	E20236CH15429001
Deposit Account	501662
Authorized User	Bindi Patel

The Director of the USPTO is hereby authorized to charge indicated fees and credit any overpayment as follows:

37 CFR 1.16 (National application filing, search, and examination fees)

37 CFR 1.17 (Patent application and reexamination processing fees)

37 CFR 1.19 (Document supply fees)

37 CFR 1.20 (Post Issuance fees)

37 CFR 1.21 (Miscellaneous fees and charges)

File Listing:

Document Number	Document Description	File Name	File Size(Bytes)/ Message Digest	Multi Part /.zip	Pages (if appl.)
1	Issue Fee Payment (PTO-85B)	INCEP-001COD_web85_06-13-2023.pdf	53365 aaf45dad5e4b8ae0f81b9eebe8e15dab973934b7	no	2
Warnings:					
Information:					
2	Miscellaneous Incoming Letter	INCEP-001COD_FeeAddress_06-13-2023.pdf	22450 bb98695a963b2f6d6a3234c59aa6b96a69c9d5e1	no	1
Warnings:					
Information:					
3	Fee Worksheet (SB06)	fee-info.pdf	37537 82b38df8fd0403345ffa84802014fda9716cb712	no	2
Warnings:					
Information:					
		Total Files Size (in bytes):	113352		

This Acknowledgement Receipt evidences receipt on the noted date by the USPTO of the indicated documents, characterized by the applicant, and including page counts, where applicable. It serves as evidence of receipt similar to a Post Card, as described in MPEP 503.

New Applications Under 35 U.S.C. 111

If a new application is being filed and the application includes the necessary components for a filing date (see 37 CFR 1.53(b)-(d) and MPEP 506), a Filing Receipt (37 CFR 1.54) will be issued in due course and the date shown on this Acknowledgement Receipt will establish the filing date of the application.

National Stage of an International Application under 35 U.S.C. 371

If a timely submission to enter the national stage of an international application is compliant with the conditions of 35 U.S.C. 371 and other applicable requirements a Form PCT/DO/EO/903 indicating acceptance of the application as a national stage submission under 35 U.S.C. 371 will be issued in addition to the Filing Receipt, in due course.

New International Application Filed with the USPTO as a Receiving Office

If a new international application is being filed and the international application includes the necessary components for an international filing date (see PCT Article 11 and MPEP 1810), a Notification of the International Application Number and of the International Filing Date (Form PCT/RO/105) will be issued in due course, subject to prescriptions concerning national security, and the date shown on this Acknowledgement Receipt will establish the international filing date of the application.

Document Description: Issue Fee Payment (PTO-85B)

Issue Fee Transmittal Form

Application Number	Filing Date	First Named Inventor	Atty. Docket No.	Confirmation No.
14228057	27-Mar-2014	Thien Nguyen	INCEP-001COD	1983

TITLE OF INVENTION :

INTRAORAL DEVICE

Entity Status	Application Type	Art Unit	Class - Subclass	EXAMINER
Small	Utility under 35 USC 111(a)	3772	093000	MIRAYDA APONTE

Issue Fee Due	Publication Due	Total Fee(s) Due	Date Due	Prev. Paid Fee
$480	$0	$480	07-Sep-2023	$0

1.Change of Correspondence Address and/or Indication Of Fee Address (37 CFR 1.33 & 1.363)

Current Correspondence Address:	Current Indicated Fee Address :
138718 Polsinelli LLP PO Box 140310 Kansas City MO 64114-0310 UNITED STATES 4152482116 patentdocketing@polsinelli.com	
☐ Change of correspondence address requested, system generated AIA/122-EFS form attached	☒ Fee Address indication requested, system generated SB/47-EFS form attached

2.Entity Status

Change in Entity Status

○ Applicant certifying micro entity status; system generated Micro Entity certification form attached. See 37 CFR 1.29.
Note: Absent a valid certification of micro entity status, issue fee payment in the micro entity amount will not be accepted at the risk of application abandonment. If this box is checked, you will be prompted to choose a micro entity status on the gross income basis (37 CFR 1.29(a)) or the institution of higher education basis (37 CFR 1.29(d)), and make the applicable certification online.

◉ Applicant asserting small entity status. See 37 CFR 1.27.
Note: If the application was previously under micro entity status, checking this box will be taken to be a notification of loss of entitlement to micro entity status.

○ Applicant changing to regular undiscounted fee status.
Note: Checking this box will be taken to be a notification of loss of entitlement to small or micro entity status, as applicable.

Document Description: Issue Fee Payment (PTO-85B)

3.The Following Fee(s) Are Submitted:

☒ Issue Fee

☐ I authorize USPTO to apply my previously paid issue fee to the current fees due

☐ Publication Fee

☐ The Director is hereby authorized to apply my previously paid issue fee to the current fee due and to charge deficient fees to Deposit Account Number _____

☒ If **in addition to** the payment of the issue fee amount submitted with this form, there are any discrepancies in any amount(s) due, the Director is authorized to charge any deficiency, or credit any overpayment, to Deposit Account Number 501662 . The **issue fee must be submitted** with this form. **If payment of the issue fee does not accompany this form, checking this box and providing a deposit account number will NOT be effective to satisfy full payment of the fee(s) due.**

4.Firm and/or Attorney Names To Be Printed

NOTE: If no name is listed, no name will be printed
For printing on the patent front page, list to be displayed as entered

1. POLSINELLI LLP
2.
3.

5.Assignee Name(s) and Residence Data To Be Printed

PLEASE NOTE: Unless an assignee is identified below, no assignee data will appear on the patent. If an assignee is identified below, the document has been filed for recordation as set forth in 37 CFR 3.11. Completion of this form is NOT a substitute for filing an assignment.

Name	City	State	Country	Category
Solmetex, ILC	Northborough	MASSACHUSETTS	UNITED STATES	corporation

6.Signature

I certify, in accordance with 37 CFR 1.4(d)(4) that I am an attorney or agent registered to practice before the Patent and Trademark Office who has filed and has been granted power of attorney in this application. I also certify that this Fee(s) Transmittal form is being transmitted to the USPTO via EFS-WEB on the date indicated below.

Signature	/Tam Thanh Pham/	**Date**	06-13-2023
Name	TamThanh Thi Pham	**Registration Number**	50565

IN THE UNITED STATES PATENT AND TRADEMARK OFFICE

Group Art Unit: 3772 | Examiner: APONTE, MIRAYDA ARLENE

Serial No.: 14/228,057 | Filed: March 27, 2014

In re Application of: Thien Nguyen

Confirmation No.: 1983 | Customer No.: 138718

Title: INTRAORAL DEVICE

Mail Stop Issue Fee
Commissioner for Patents
P.O. Box 1450
Alexandria VA 22313-1450

APPLICANT'S COMMENTS ON REASONS FOR ALLOWANCE

Examiner Cohen:

These comments are responsive to the Notice of Allowance mailed on June 7, 2023, which sets forth the Examiner's statement of reasons for allowance.

The Examiner is thanked for the kind allowance of all pending claims. Applicant acknowledges the Examiner's statement of reasons for allowance as set forth in the Notice of Allowance. However, Applicant points out that the reasons for allowablity of the above referenced claims are not limited to the reasons for allowance as set forth in the Notice of Allowance, and that additional reasons for allowablity may exist, each of which may be independently sufficient to establish the patentability of one or more pending claims.

Applicant respectfully reserves the right to introduce, articulate, or otherwise comment on any such additional reasons for allowance as may be appropriate in any future proceedings concerning the claimed invention.

Please charge any additional required fee or credit any overpayment to our deposit account number 50-1662.

Respectfully submitted,
POLSINELLI LLP

Dated: June 13, 2023 By: /Tam Thanh Pham/

Tam Thanh Pham (Reg. No. 50565)
POLSINELLI LLP
Three Embarcadero Center, Suite 2400 San Francisco, CA 94111
415-248-2100 (Main)
patentdocketing@polsinelli.com

Electronic Acknowledgement Receipt

EFS ID:	48140684
Application Number:	14228057
International Application Number:	
Confirmation Number:	1983
Title of Invention:	INTRAORAL DEVICE
First Named Inventor/Applicant Name:	Thien Nguyen
Customer Number:	138718
Filer:	TamThanh Thi Pham/Bindi Patel
Filer Authorized By:	TamThanh Thi Pham
Attorney Docket Number:	INCEP-001COD
Receipt Date:	13-JUN-2023
Filing Date:	27-MAR-2014
Time Stamp:	17:17:28
Application Type:	Utility under 35 USC 111(a)

Payment information:

Submitted with Payment	no

File Listing:

Document Number	Document Description	File Name	File Size(Bytes)/ Message Digest	Multi Part /.zip	Pages (if appl.)
1	Miscellaneous Incoming Letter	INCEP-001COD_Comments_Allowance_06-13-2023.pdf	125460 6c8ab9ec84e5f62a92374d7f3c2bdecf5d02c9dc	no	2

Warnings:

Information:	
Total Files Size (in bytes):	125460

This Acknowledgement Receipt evidences receipt on the noted date by the USPTO of the indicated documents, characterized by the applicant, and including page counts, where applicable. It serves as evidence of receipt similar to a Post Card, as described in MPEP 503.

New Applications Under 35 U.S.C. 111

If a new application is being filed and the application includes the necessary components for a filing date (see 37 CFR 1.53(b)-(d) and MPEP 506), a Filing Receipt (37 CFR 1.54) will be issued in due course and the date shown on this Acknowledgement Receipt will establish the filing date of the application.

National Stage of an International Application under 35 U.S.C. 371

If a timely submission to enter the national stage of an international application is compliant with the conditions of 35 U.S.C. 371 and other applicable requirements a Form PCT/DO/EO/903 indicating acceptance of the application as a national stage submission under 35 U.S.C. 371 will be issued in addition to the Filing Receipt, in due course.

New International Application Filed with the USPTO as a Receiving Office

If a new international application is being filed and the international application includes the necessary components for an international filing date (see PCT Article 11 and MPEP 1810), a Notification of the International Application Number and of the International Filing Date (Form PCT/RO/105) will be issued in due course, subject to prescriptions concerning national security, and the date shown on this Acknowledgement Receipt will establish the international filing date of the application.

UNITED STATES DEPARTMENT OF COMMERCE
United States Patent and Trademark Office
Address: COMMISSIONER FOR PATENTS
P.O. Box 1450
Alexandria, Virginia 22313-1450
www.uspto.gov

APPLICATION NO.	FILING DATE	FIRST NAMED INVENTOR	ATTORNEY DOCKET NO.	CONFIRMATION NO.
14/228,057	03/27/2014	Thien Nguyen	INCEP-001COD	1983

138718 7590 07/12/2023

Polsinelli LLP
PO Box 140310
Kansas City, MO 64114-0310

EXAMINER
APONTE, MIRAYDA ARLENE

ART UNIT	PAPER NUMBER
3772	

NOTIFICATION DATE	DELIVERY MODE
07/12/2023	ELECTRONIC

Please find below and/or attached an Office communication concerning this application or proceeding.

The time period for reply, if any, is set in the attached communication.

Notice of the Office communication was sent electronically on above-indicated "Notification Date" to the following e-mail address(es):

patentdocketing@polsinelli.com
sfpatent@polsinelli.com

Supplemental ***Notice of Allowability***	**Application No.** 14/228,057	**Applicant(s)** Nguyen et al.	
	Examiner MIRAYDA A APONTE	**Art Unit** 3772	**AIA (FITF) Status** No

-- The MAILING DATE of this communication appears on the cover sheet with the correspondence address--

All claims being allowable, PROSECUTION ON THE MERITS IS (OR REMAINS) CLOSED in this application. If not included herewith (or previously mailed), a Notice of Allowance (PTOL-85) or other appropriate communication will be mailed in due course. **THIS NOTICE OF ALLOWABILITY IS NOT A GRANT OF PATENT RIGHTS.** This application is subject to withdrawal from issue at the initiative of the Office or upon petition by the applicant. See 37 CFR 1.313 and MPEP 1308.

1. ☑ This communication is responsive to 8 June 2023.
   ☐ A declaration(s)/affidavit(s) under **37 CFR 1.130(b)** was/were filed on _____.

2. ☐ An election was made by the applicant in response to a restriction requirement set forth during the interview on _____; the restriction requirement and election have been incorporated into this action.

3. ☑ The allowed claim(s) is/are 1-2,4-8,10,14-16 and 21-30 . As a result of the allowed claim(s), you may be eligible to benefit from the **Patent Prosecution Highway** program at a participating intellectual property office for the corresponding application. For more information, please see **http://www.uspto.gov/patents/init_events/pph/index.jsp** or send an inquiry to **PPHfeedback@uspto.gov.**

4. ☐ Acknowledgment is made of a claim for foreign priority under 35 U.S.C. § 119(a)-(d) or (f).

   Certified copies:

   a) ☐ All b) ☐ Some* c) ☐ None of the:

   1. ☐ Certified copies of the priority documents have been received.
   2. ☐ Certified copies of the priority documents have been received in Application No. _____ .
   3. ☐ Copies of the certified copies of the priority documents have been received in this national stage application from the International Bureau (PCT Rule 17.2(a)).

   * Certified copies not received: _____ .

Applicant has THREE MONTHS FROM THE "MAILING DATE" of this communication to file a reply complying with the requirements noted below. Failure to timely comply will result in ABANDONMENT of this application.
THIS THREE-MONTH PERIOD IS NOT EXTENDABLE.

5. ☐ CORRECTED DRAWINGS (as "replacement sheets") must be submitted.
   ☐ including changes required by the attached Examiner's Amendment / Comment or in the Office action of Paper No./Mail Date _____ .

   Identifying indicia such as the application number (see 37 CFR 1.84(c)) should be written on the drawings in the front (not the back) of each sheet. Replacement sheet(s) should be labeled as such in the header according to 37 CFR 1.121(d).

6. ☐ DEPOSIT OF and/or INFORMATION about the deposit of BIOLOGICAL MATERIAL must be submitted. Note the attached Examiner's comment regarding REQUIREMENT FOR THE DEPOSIT OF BIOLOGICAL MATERIAL.

Attachment(s)

1. ☐ Notice of References Cited (PTO-892)
2. ☑ Information Disclosure Statements (PTO/SB/08), Paper No./Mail Date _____.
3. ☐ Examiner's Comment Regarding Requirement for Deposit of Biological Material _____.
4. ☐ Interview Summary (PTO-413), Paper No./Mail Date. _____.
5. ☐ Examiner's Amendment/Comment
6. ☐ Examiner's Statement of Reasons for Allowance
7. ☐ Other _____.

/MIRAYDA A APONTE/ Examiner, Art Unit 3772	/RALPH A LEWIS/ Primary Examiner, Art Unit 3772

Substitute for Form 1449/PTO

INFORMATION DISCLOSURE STATEMENT BY APPLICANT

(use as many sheets as necessary)

Complete if Known	
Application Number	14/228,057
Filing Date	March 27, 2014
First Named Inventor:	Thien Nguyen
Art Unit	3732
Examiner Name	Hao D. Mai
Attorney Docket Number	INCEP-001COD

Sheet	1	of	2

U.S. PATENT DOCUMENTS

Examiner Initials*	Cite No.'	Document Number Number-Kind Code[2](If known)	Publication Date MM-DD-YYYY	Name of Patentee or Applicant of Cited Document	Pages, Columns, Lines, Where Relevant Passages or Relevant Figures Appear
		US-			
		US-			
		US-			
		US-			
		US-			
		US-			
		US-			
		US-			
		US-			
		US-			
		US-			
		US-			
		US-			
		US-			

FOREIGN PATENT DOCUMENTS

Examiner Initials*	Cite No.'	Foreign Patent Document Country Code[3] Number[4] Kind Codes (if known)	Publication Date MM-DD-YYYY	Name of Patentee or Applicant of Cited Document	Pages, Columns, Lines, Where Relevant Passages or Relevant Figures Appear	T6
		CN 102026587	4/20/2011	Dentozone Co. Ltd.		
		CN 102247140	11/23/2011	Third Hospital Xinxiang Medical University		

Examiner Signature	/MIRAYDA A APONTE/	Date Considered	07/03/2023

*EXAMINER: Initial if reference considered, whether or not citation is in conformance with MPEP 609; Draw line through citation if not in conformance and not considered. Include copy of this form with next communication to applicant. 'Applicant's unique citation designation number (optional). [2]See Kinds Codes of USPTO Patent Documents at www.uspto.gov or MPEP 901.04. [3]Enter Office that issued the document, by the two-letter code (WIPO Standard ST.3). [4]For Japanese patent documents, the indication of the year of reign of the Emperor must precede the serial number of the patent document. [5]Kind of document by the appropriate symbols as indicated on the document under WIPO Standard ST. 16 if possible. [6]Applicant is to place a check mark here if English language translation is attached.

This collection of information is required by 37 CFR 1.97 and 1.98. The information is required to obtain or retain a benefit by the public which is to file (and by the USPTO to process) an application. Confidentiality is governed by 35 U.S.C. 122 and 37 CFR 1.14. This collection is estimated to take 2 hours to complete including gathering, preparing, and submitting the completed application form to the USPTO. Time will vary depending upon the individual case. Any comments on the amount of time you require to complete this form and/or suggestions for reducing this burden, should be sent to the Chief Information Officer, U.S. Patent and Trademark Office, P.O. Box 1450, Alexandria, VA 22313-1450. DO NOT SENT FEES OR COMPLETED FORMS TO THIS ADDRESS. **SEND TO: Commissioner for Patents, P.O. Box 1450, Alexandria, Virginia 22313-1450.**

If you need assistance in completing the form, call 1-800-PTO-9199 (1-800-786-9199) and select option 2.

ALL REFERENCES CONSIDERED EXCEPT WHERE LINED THROUGH. /M.A.A/

Substitute for Form 1449/PTO **INFORMATION DISCLOSURE STATEMENT BY APPLICANT** *(use as many sheets as necessary)*		***Complete if Known***
	Application Number	14/228,057
	Filing Date	March 27, 2014
	First Named Inventor:	Thien Nguyen
	Art Unit	3732
	Examiner Name	Hao D. Mai
Sheet 2 **of** 2	Attorney Docket Number	INCEP-001COD

NON PATENT LITERATURE DOCUMENTS

Examiner Initials*	Cite No'	Include name of the author (in CAPITAL LETTERS), title of the article (when appropriate), title of the item (book, magazine, journal, serial, symposium, catalog, etc.), date, page(s), volume-issue number(s), publisher, city and/or country where published	T^2
		Chinese Patent Application No. 201480039991.2 First Office Action dated 12/29/16	

Examiner Signature	/MIRAYDA A APONTE/	Date Considered	07/03/2023

*Examiner: Initial if reference considered, whether or not citation is in conformance with MPEP 609. Draw line through citation if not in conformance and not considered. Include copy of this form with next communication to applicant.

'Applicant's unique citation designation number (optional). 'Applicant is to place a check mark here if English Translation is attached.

This collection of information is required by 37 CFR 1.98. The information is required to obtain or retain a benefit by the public which is to file (and by the USPTO to process) an application. Confidentiality is governed by 35 U.S.C. 122 and 37 CFR 1.14. This collection is estimated to take 2 hours to complete including gathering, preparing, and submitting the completed application form to the USPTO. Time will vary depending upon the individual case. Any comments on the amount of time you require to complete this form and/or suggestions for reducing this burden, should be sent to the Chief Information Officer, U.S. Patent and Trademark Office, P.O. Box 1450, Alexandria, VA 22313-1450. DO NOT SENT FEES OR COMPLETED FORMS TO THIS ADDRESS. **SEND TO: Commissioner for Patents, P.O. Box 1450, Alexandria, Virginia 22313-1450.**
If you need assistance in completing the form, call 1-800-PTO-9199 (1-800-786-9199) and select option 2.

ALL REFERENCES CONSIDERED EXCEPT WHERE LINED THROUGH. /M.A.A/

UNITED STATES DEPARTMENT OF COMMERCE
United States Patent and Trademark Office
Address: COMMISSIONER FOR PATENTS
P.O. Box 1450
Alexandria, Virginia 22313-1450
www.uspto.gov

APPLICATION NO.	FILING DATE	FIRST NAMED INVENTOR	ATTORNEY DOCKET NO.	CONFIRMATION NO.
14/228,057	03/27/2014	Thien Nguyen	INCEP-001COD	1983

138718 7590 08/09/2023

Polsinelli LLP
PO Box 140310
Kansas City, MO 64114-0310

EXAMINER
APONTE, MIRAYDA ARLENE

ART UNIT	PAPER NUMBER
3772	

NOTIFICATION DATE	DELIVERY MODE
08/09/2023	ELECTRONIC

Please find below and/or attached an Office communication concerning this application or proceeding.

The time period for reply, if any, is set in the attached communication.

Notice of the Office communication was sent electronically on above-indicated "Notification Date" to the following e-mail address(es):

patentdocketing@polsinelli.com
sfpatent@polsinelli.com

Supplemental ***Notice of Allowability***	**Application No.** 14/228,057	**Applicant(s)** Nguyen et al.	
	Examiner MIRAYDA A APONTE	**Art Unit** 3772	**AIA (FITF) Status** No

-- The MAILING DATE of this communication appears on the cover sheet with the correspondence address--

All claims being allowable, PROSECUTION ON THE MERITS IS (OR REMAINS) CLOSED in this application. If not included herewith (or previously mailed), a Notice of Allowance (PTOL-85) or other appropriate communication will be mailed in due course. **THIS NOTICE OF ALLOWABILITY IS NOT A GRANT OF PATENT RIGHTS.** This application is subject to withdrawal from issue at the initiative of the Office or upon petition by the applicant. See 37 CFR 1.313 and MPEP 1308.

1. ☑ This communication is responsive to IDS received on 6 June 2023.
   ☐ A declaration(s)/affidavit(s) under **37 CFR 1.130(b)** was/were filed on _____.

2. ☐ An election was made by the applicant in response to a restriction requirement set forth during the interview on _____; the restriction requirement and election have been incorporated into this action.

3. ☑ The allowed claim(s) is/are See Continuation Sheet . As a result of the allowed claim(s), you may be eligible to benefit from the **Patent Prosecution Highway** program at a participating intellectual property office for the corresponding application. For more information, please see **http://www.uspto.gov/patents/init_events/pph/index.jsp** or send an inquiry to **PPHfeedback@uspto.gov.**

4. ☐ Acknowledgment is made of a claim for foreign priority under 35 U.S.C. § 119(a)-(d) or (f).

   Certified copies:

   a) ☐ All b) ☐ Some* c) ☐ None of the:

   1. ☐ Certified copies of the priority documents have been received.
   2. ☐ Certified copies of the priority documents have been received in Application No. _____ .
   3. ☐ Copies of the certified copies of the priority documents have been received in this national stage application from the International Bureau (PCT Rule 17.2(a)).

   * Certified copies not received: _____ .

Applicant has THREE MONTHS FROM THE "MAILING DATE" of this communication to file a reply complying with the requirements noted below. Failure to timely comply will result in ABANDONMENT of this application.
THIS THREE-MONTH PERIOD IS NOT EXTENDABLE.

5. ☐ CORRECTED DRAWINGS (as "replacement sheets") must be submitted.
   ☐ including changes required by the attached Examiner's Amendment / Comment or in the Office action of Paper No./Mail Date _____ .

   Identifying indicia such as the application number (see 37 CFR 1.84(c)) should be written on the drawings in the front (not the back) of each sheet. Replacement sheet(s) should be labeled as such in the header according to 37 CFR 1.121(d).

6. ☐ DEPOSIT OF and/or INFORMATION about the deposit of BIOLOGICAL MATERIAL must be submitted. Note the attached Examiner's comment regarding REQUIREMENT FOR THE DEPOSIT OF BIOLOGICAL MATERIAL.

Attachment(s)

1. ☐ Notice of References Cited (PTO-892)
2. ☑ Information Disclosure Statements (PTO/SB/08), Paper No./Mail Date _____.
3. ☐ Examiner's Comment Regarding Requirement for Deposit of Biological Material _____.
4. ☐ Interview Summary (PTO-413), Paper No./Mail Date. _____.
5. ☐ Examiner's Amendment/Comment
6. ☐ Examiner's Statement of Reasons for Allowance
7. ☐ Other _____.

/MIRAYDA A APONTE/ Examiner, Art Unit 3772	/RALPH A LEWIS/ Primary Examiner, Art Unit 3772

Continuation of 3. The allowed claim(s) is/are: 1-2,4-8,10,14-16 and 21-30

Substitute for Form 1449/PTO	Complete if Known	
INFORMATION DISCLOSURE STATEMENT BY APPLICANT *(use as many sheets as necessary)*	Application Number	14/228,057
	Filing Date	March 27, 2014
	First Named Inventor:	Thien Nguyen
	Art Unit	3772
	Examiner Name	Mirayda A. Aponte
Sheet 2 of 2	Attorney Docket Number	INCEP-001COD

NON PATENT LITERATURE DOCUMENTS

Examiner Initials*	Cite No'	Include name of the author (in CAPITAL LETTERS), title of the article (when appropriate), title of the item (book, magazine, journal, serial, symposium, catalog, etc.), date, page(s), volume-issue number(s), publisher, city and/or country where published	T[2]
		European Patent Application No. 20804801.7; Extended European Search Report dated 4/20/23	
		European Patent Application No. 20804801.7; Supplementary European Search Report dated 5/10/23	

Examiner Signature	/MIRAYDA A APONTE/	Date Considered	08/01/2023

*Examiner: Initial if reference considered, whether or not citation is in conformance with MPEP 609. Draw line through citation if not in conformance and not considered. Include copy of this form with next communication to applicant.

'Applicant's unique citation designation number (optional). 'Applicant is to place a check mark here if English Translation is attached.

This collection of information is required by 37 CFR 1.98. The information is required to obtain or retain a benefit by the public which is to file (and by the USPTO to process) an application. Confidentiality is governed by 35 U.S.C. 122 and 37 CFR 1.14. This collection is estimated to take 2 hours to complete including gathering, preparing, and submitting the completed application form to the USPTO. Time will vary depending upon the individual case. Any comments on the amount of time you require to complete this form and/or suggestions for reducing this burden, should be sent to the Chief Information Officer, U.S. Patent and Trademark Office, P.O. Box 1450, Alexandria, VA 22313-1450. DO NOT SENT FEES OR COMPLETED FORMS TO THIS ADDRESS. **SEND TO: Commissioner for Patents, P.O. Box 1450, Alexandria, Virginia 22313-1450.**

If you need assistance in completing the form, call 1-800-PTO-9199 (1-800-786-9199) and select option 2.

Based on Form PTO/SB/08B (08-03)

ALL REFERENCES CONSIDERED EXCEPT WHERE LINED THROUGH. /M.A.A/

Substitute for Form 1449/PTO				Complete if Known	
INFORMATION DISCLOSURE STATEMENT BY APPLICANT *(use as many sheets as necessary)*				Application Number	14/228,057
				Filing Date	March 27, 2014
				First Named Inventor:	Thien Nguyen
				Art Unit	3772
				Examiner Name	Hao D. Mai
Sheet	**1**	**of**	**2**	Attorney Docket Number	INCEP-001COD

U.S. PATENT DOCUMENTS

Examiner Initials*	Cite No.'	Document Number Number-Kind Code[2](If known)		Publication Date MM-DD-YYYY	Name of Patentee or Applicant of Cited Document	Pages, Columns, Lines, Where Relevant Passages or Relevant Figures Appear
		US-	D666,726	9/4/2012	Davis et al.	
		US-	D735,858	8/4/2015	Hirsch et al.	
		US-	D737,964	9/1/2015	Jessop et al.	
		US-	D782,047	3/21/2017	Ritter	
		US-	D782,048	3/21/2017	Ritter	
		US-	D787,069	5/16/2017	Ritter	
		US-	D787,070	5/16/2017	Ritter	
		US-	D868,958	12/3/2019	Reyes	
		US-	1,731,322 10/1929	~~10/15/2029~~	Riddle	
Change(s) applied to document, /J.E./ 6/8/2023		US-	3,758,950	9/18/1973	Krouzian	
		US-	5,009,595	4/23/1991	Osborn	
		US-	5,588,836	12/31/1996	Landis et al.	
		US-	6,241,521	6/5/2001	Garrison	
		US-	9,968,341	5/15/2018	Ritter	
		US-	2020/0352680	11/12/2020	Nguyen	

FOREIGN PATENT DOCUMENTS

Examiner Initials*	Cite No.'	Foreign Patent Document Country Code[3] Number[4] Kind Codes (if known)	Publication Date MM-DD-YYYY	Name of Patentee or Applicant of Cited Document	Pages, Columns, Lines, Where Relevant Passages or Relevant Figures Appear	T6
		WO 2020/231864	11/19/2020	Dryshield, LLC		

Examiner Signature	/Hao D Mai./	Date Considered	11/06/2021

*EXAMINER: Initial if reference considered, whether or not citation is in conformance with MPEP 609; Draw line through citation if not in conformance and not considered. Include copy of this form with next communication to applicant. 'Applicant's unique citation designation number (optional). [2]See Kinds Codes of USPTO Patent Documents at www.uspto.gov or MPEP 901.04. [3]Enter Office that issued the document, by the two-letter code (WIPO Standard ST.3). [4]For Japanese patent documents, the indication of the year of reign of the Emperor must precede the serial number of the patent document. [5]Kind of document by the appropriate symbols as indicated on the document under WIPO Standard ST. 16 if possible. [6]Applicant is to place a check mark here if English language translation is attached.

This collection of information is required by 37 CFR 1.97 and 1.98. The information is required to obtain or retain a benefit by the public which is to file (and by the USPTO to process) an application. Confidentiality is governed by 35 U.S.C. 122 and 37 CFR 1.14. This collection is estimated to take 2 hours to complete including gathering, preparing, and submitting the completed application form to the USPTO. Time will vary depending upon the individual case. Any comments on the amount of time you require to complete this form and/or suggestions for reducing this burden, should be sent to the Chief Information Officer, U.S. Patent and Trademark Office, P.O. Box 1450, Alexandria, VA 22313-1450. DO NOT SENT FEES OR COMPLETED FORMS TO THIS ADDRESS. **SEND TO: Commissioner for Patents, P.O. Box 1450, Alexandria, Virginia 22313-1450.**

If you need assistance in completing the form, call 1-800-PTO-9199 (1-800-786-9199) and select option 2.

ALL REFERENCES CONSIDERED EXCEPT WHERE LINED THROUGH. /HDM/

UNITED STATES PATENT AND TRADEMARK OFFICE

UNITED STATES DEPARTMENT OF COMMERCE
United States Patent and Trademark Office
Address: COMMISSIONER FOR PATENTS
P.O. Box 1450
Alexandria, Virginia 22313-1450
www.uspto.gov

APPLICATION NO.	ISSUE DATE	PATENT NO.	ATTORNEY DOCKET NO.	CONFIRMATION NO.
14/228,057	09/05/2023	11744686	INCEP-001COD	1983

138718 7590 08/16/2023

Polsinelli LLP
PO Box 140310
Kansas City, MO 64114-0310

ISSUE NOTIFICATION

The projected patent number and issue date are specified above. The patent will issue electronically. The electronically issued patent is the official patent grant pursuant to 35 U.S.C. § 153. The patent may be accessed on or after the issue date through Patent Center at https://patentcenter.uspto.gov/. The patent will be available in both the public and the private sides of Patent Center. Further assistance in electronically accessing the patent, or about Patent Center, is available by calling the Patent Electronic Business Center at 1-888-217-9197.

The USPTO is implementing electronic patent issuance with a transition period, during which period the USPTO will mail a ceremonial paper copy of the electronic patent grant to the correspondence address of record. Additional copies of the patent (i.e., certified and presentation copies) may be ordered for a fee from the USPTO's Certified Copy Center at https://certifiedcopycenter.uspto.gov/index.html. The Certified Copy Center may be reached at (800)972-6382.

Determination of Patent Term Adjustment under 35 U.S.C. 154 (b)
(application filed on or after May 29, 2000)

The Patent Term Adjustment is 0 day(s). Any patent to issue from the above-identified application will include an indication of the adjustment on the front page.

If a Continued Prosecution Application (CPA) was filed in the above-identified application, the filing date that determines Patent Term Adjustment is the filing date of the most recent CPA.

Applicant will be able to obtain more detailed information by accessing the Patent Center (https://patentcenter.uspto.gov).

Any questions regarding the Patent Term Extension or Adjustment determination should be directed to the Office of Patent Legal Administration at (571)-272-7702. Questions relating to issue and publication fee payments should be directed to the Application Assistance Unit (AAU) of the Office of Patents Stakeholder Experience (OPSE), Stakeholder Support Division (SSD) at (571)-272-4200.

INVENTOR(s) (Please see PATENT CENTER site https://patentcenter.uspto.gov for additional inventors):

Thien Nguyen, Santa Ana, CA;
Tam Thanh Pham, San Francisco, CA;

APPLICANT(s) (Please see PATENT CENTER site https://patentcenter.uspto.gov for additional applicants):

SOLMETEX, LLC, Northborough, MA;

The United States represents the largest, most dynamic marketplace in the world and is an unparalleled location for business investment, innovation, and commercialization of new technologies. The USA offers tremendous resources and advantages for those who invest and manufacture goods here. Through SelectUSA, our nation works to encourage and facilitate business investment. To learn more about why the USA is the best country in the world to develop technology, manufacture products, and grow your business, visit SelectUSA.gov.

UNITED STATES DEPARTMENT OF COMMERCE
United States Patent and Trademark Office
Address: COMMISSIONER FOR PATENTS
P.O. Box 1450
Alexandria, Virginia 22313-1450
www.uspto.gov

APPLICATION NO.	FILING DATE	FIRST NAMED INVENTOR	ATTORNEY DOCKET NO.	CONFIRMATION NO.
14/228,057	03/27/2014	Thien Nguyen	INCEP-001COD	1983

138718 7590 09/05/2023

Polsinelli LLP
PO Box 140310
Kansas City, MO 64114-0310

EXAMINER
APONTE, MIRAYDA ARLENE

ART UNIT	PAPER NUMBER
3772	

NOTIFICATION DATE	DELIVERY MODE
09/05/2023	ELECTRONIC

Please find below and/or attached an Office communication concerning this application or proceeding.

The time period for reply, if any, is set in the attached communication.

Notice of the Office communication was sent electronically on above-indicated "Notification Date" to the following e-mail address(es):

patentdocketing@polsinelli.com
sfpatent@polsinelli.com

UNITED STATES PATENT AND TRADEMARK OFFICE

UNITED STATES DEPARTMENT OF COMMERCE
United States Patent and Trademark Office
Address: COMMISSIONER FOR PATENTS
P.O. Box 1450
Alexandria, Virginia 22313-1450
www.uspto.gov

APPLICATION NO.	ISSUE DATE	PATENT NO.
14/228,057	05-Sep-2023	11744686

Polsinelli LLP
PO Box 140310
Kansas City, MO 64114-0310

EGRANT NOTIFICATION

Your electronic patent grant (eGrant) is now available, which can be accessed via Patent Center at https://patentcenter.uspto.gov

The electronic patent grant is the official patent grant under 35 U.S.C. 153. For more information, please visit https://www.uspto.gov/electronicgrants