US 20090274991A1

(19) United States

(12) Patent Application Publication

Black et al.

(10) Pub. No.: US 2009/0274991 A1

(43) Pub. Date: Nov. 5, 2009

(54) INTRA-ORAL DEVICE AND METHOD

(75) Inventors: **Brian P. Black**, Mentone, CA (US); **John D. Van Ryn**, Sana Barbara, CA (US)

Correspondence Address:
PILLSBURY WINTHROP SHAW PITTMAN LLP
P.O BOX 10500
McLean, VA 22102 (US)

(73) Assignee: **EDGE MEDCIAL TECHONOLGIES, INC.**, Carpinteria, CA (US)

(21) Appl. No.: **12/284,900**

(22) Filed: **Sep. 26, 2008**

Related U.S. Application Data

(60) Provisional application No. 61/126,294, filed on May 2, 2008.

Publication Classification

(51) **Int. Cl.**
A61C 17/06 (2006.01)

(52) **U.S. Cl.** **433/93**

(57) **ABSTRACT**

An intra-oral device includes a tongue shield aspirator, a bite member, a bite grip, and an evacuation tube. The tongue shield aspirator may include a tongue retractor portion and a cheek retractor portion, and may be an open, unitary, and/or flexible component made of position-memory material. The bite member includes a conduit which receives the tongue shield aspirator through one end and the evacuation tube through the opposite end. The free end of the evacuation tube is connectable directly to a HVE valve to aspirate fluid/debris from the mouth. The device may be positioned in the mouth by bending the distal (free) end of the tongue shield aspirator, inserting the bite member into the mouth first, followed by the tongue shield aspirator as the device is moved towards the patient's cheek, releasing the free end of the tongue shield aspirator, and having the patient bite down on the bite member.

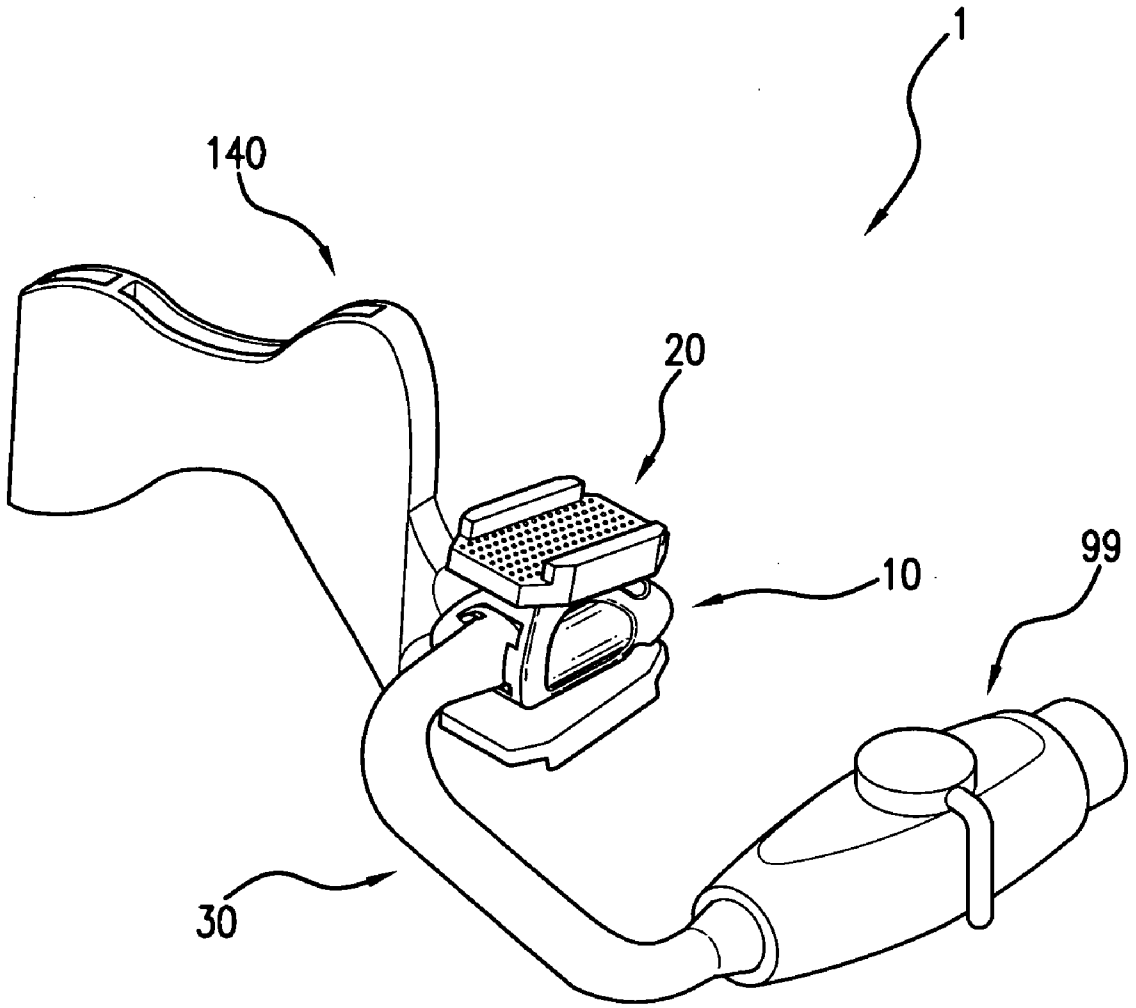

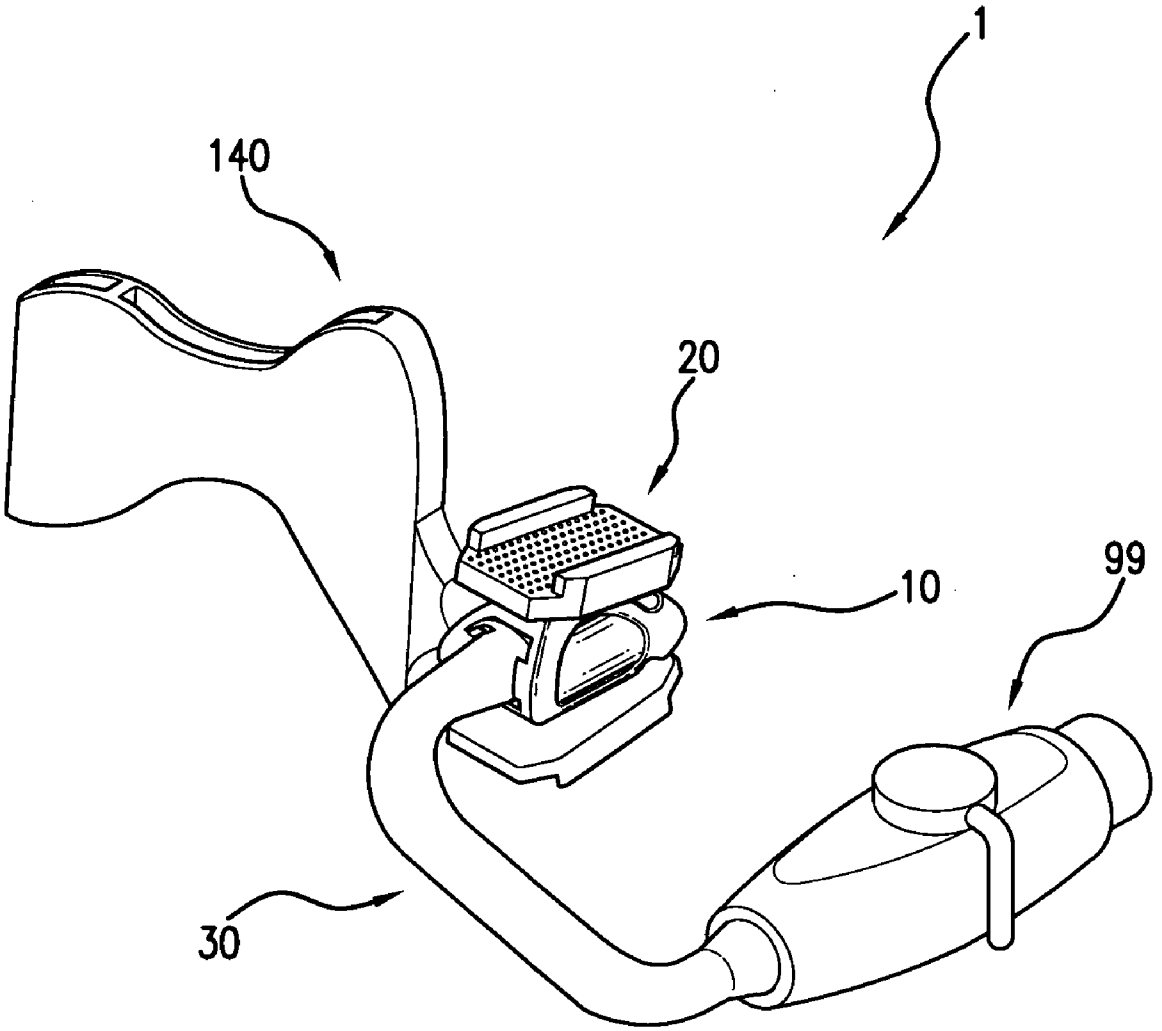

FIG. 1

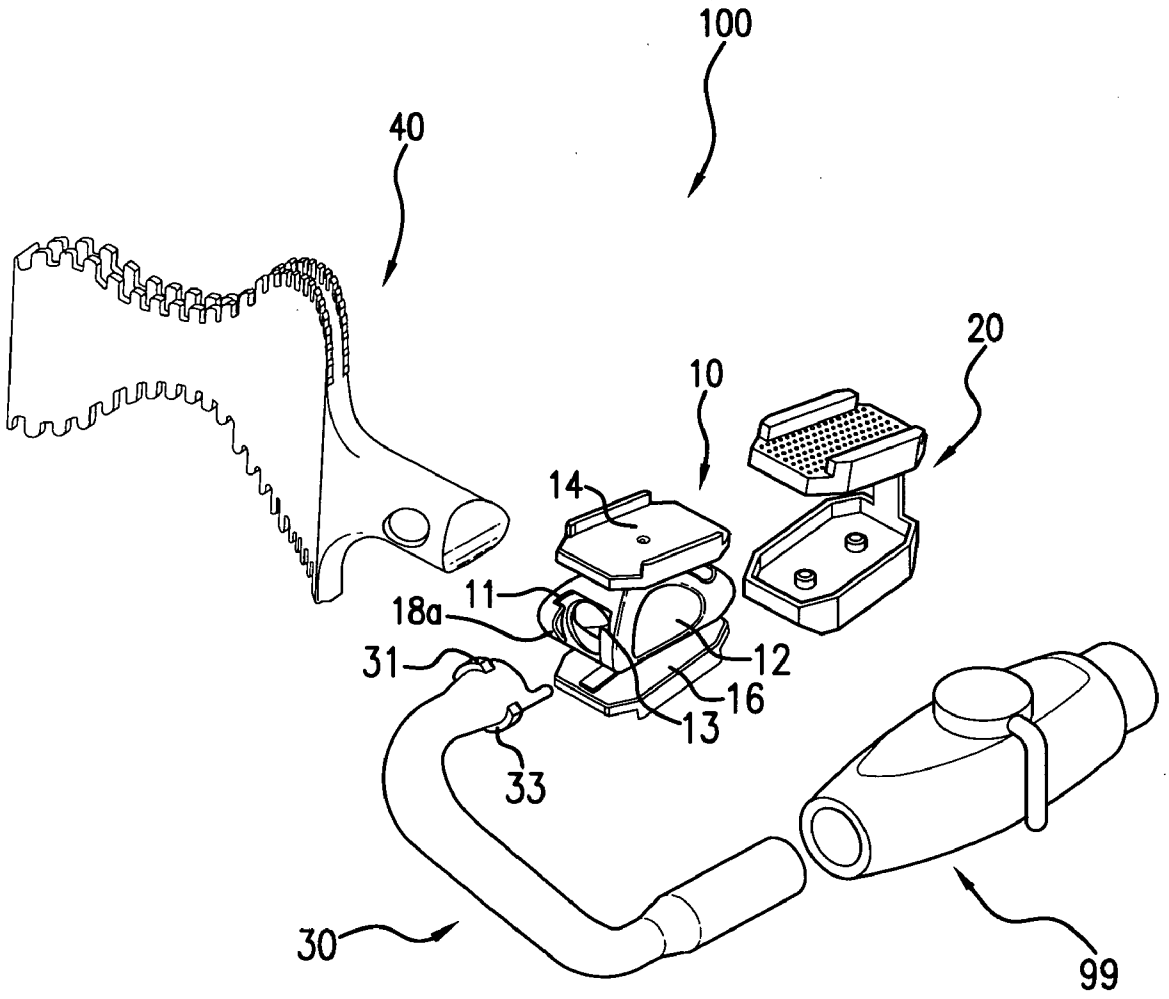

FIG.2

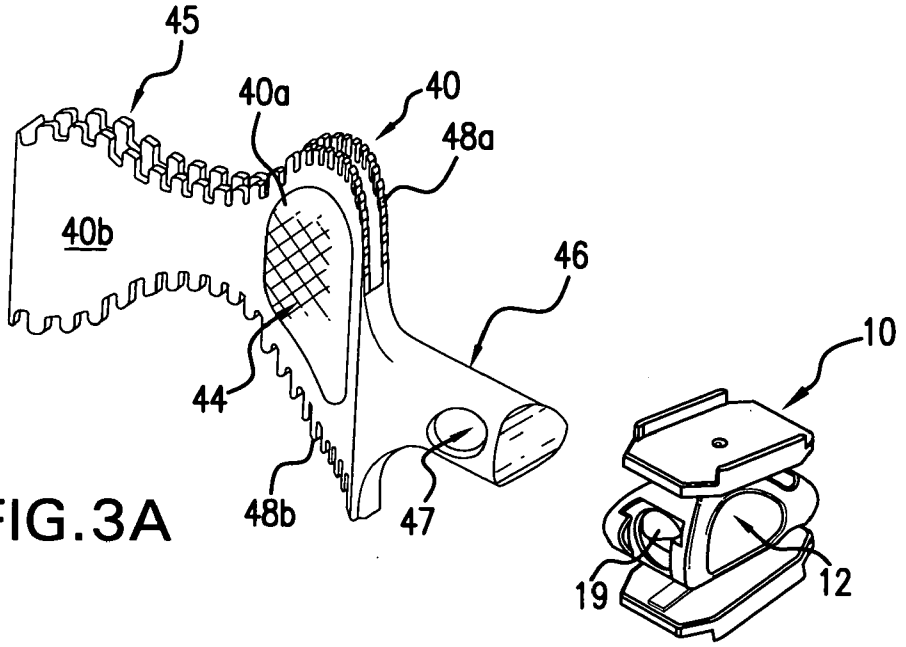

FIG.3A

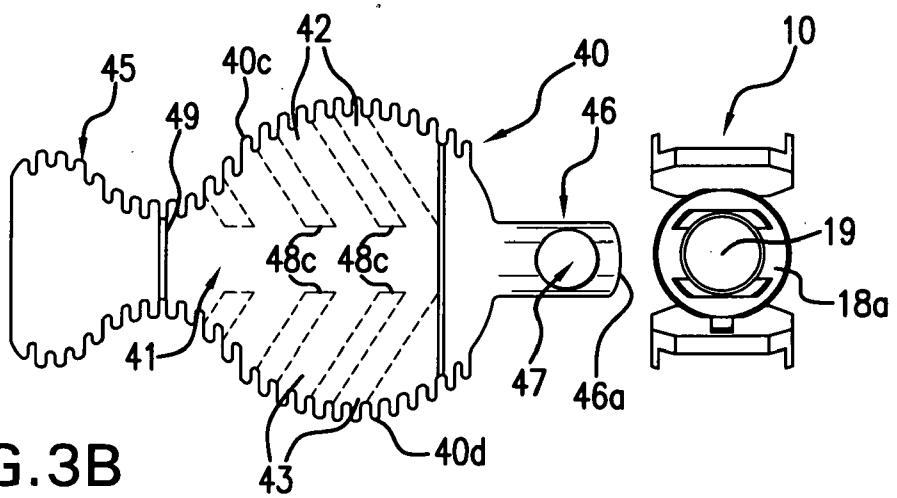

FIG.3B

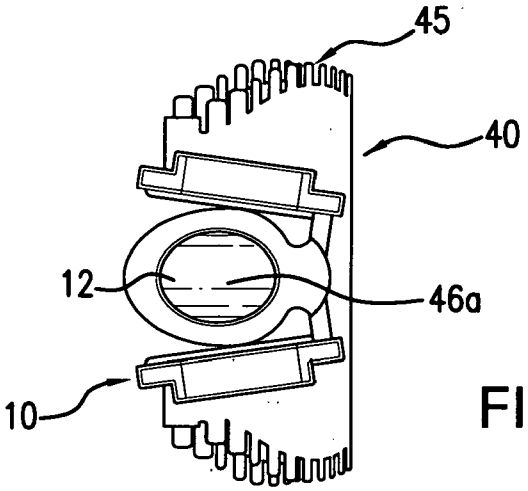

FIG.3C

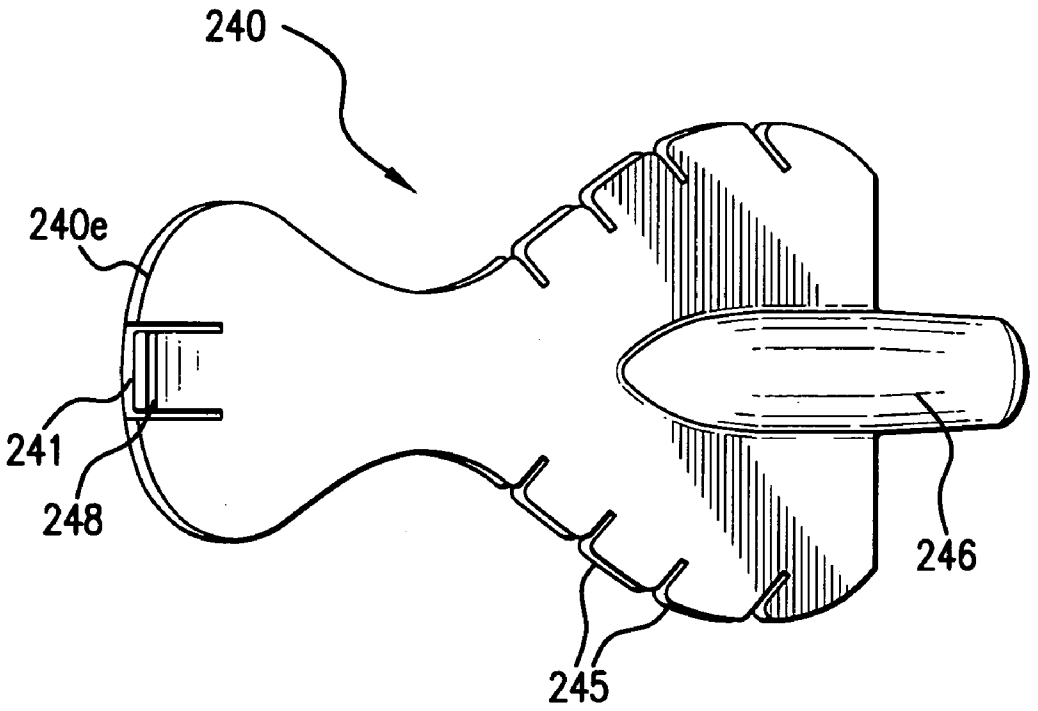

FIG.4A

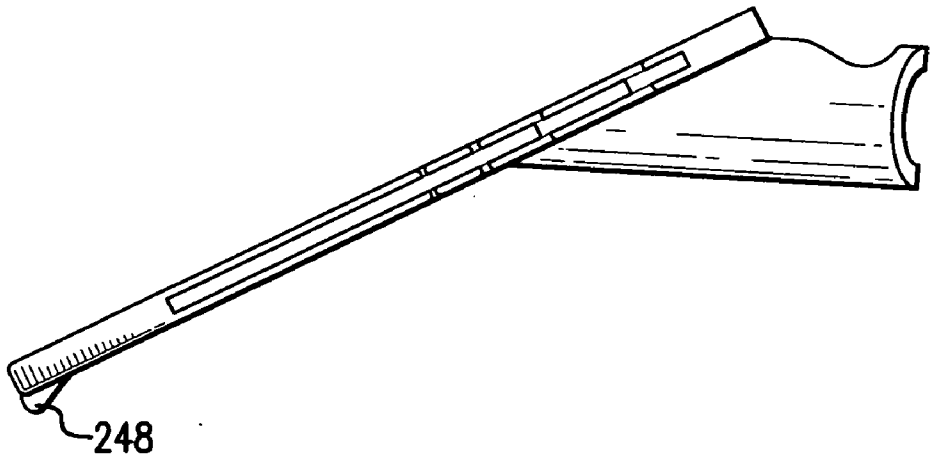

FIG.4B

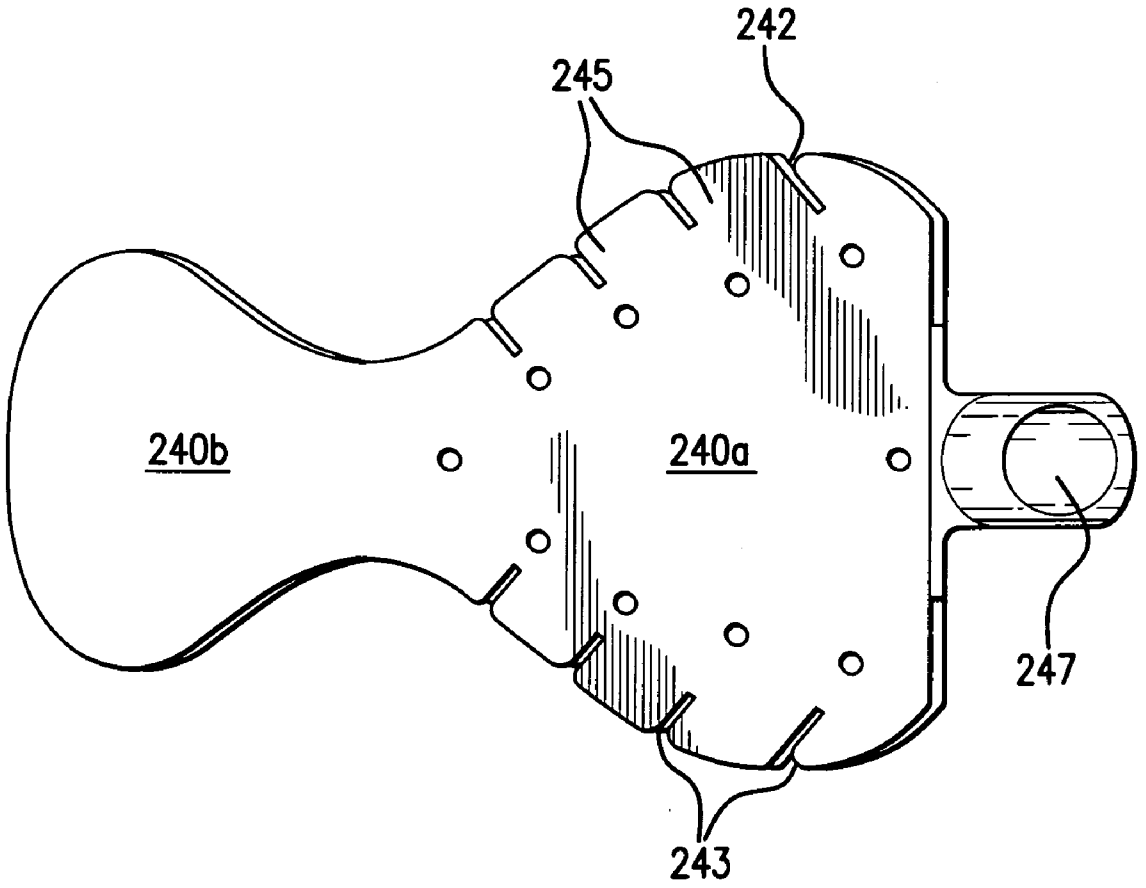

FIG.4C

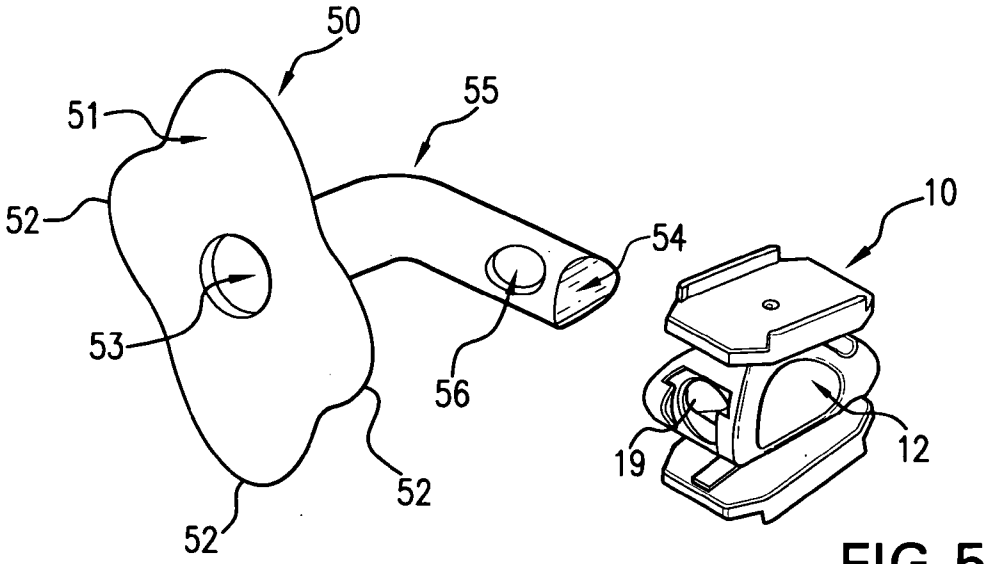

FIG.5A

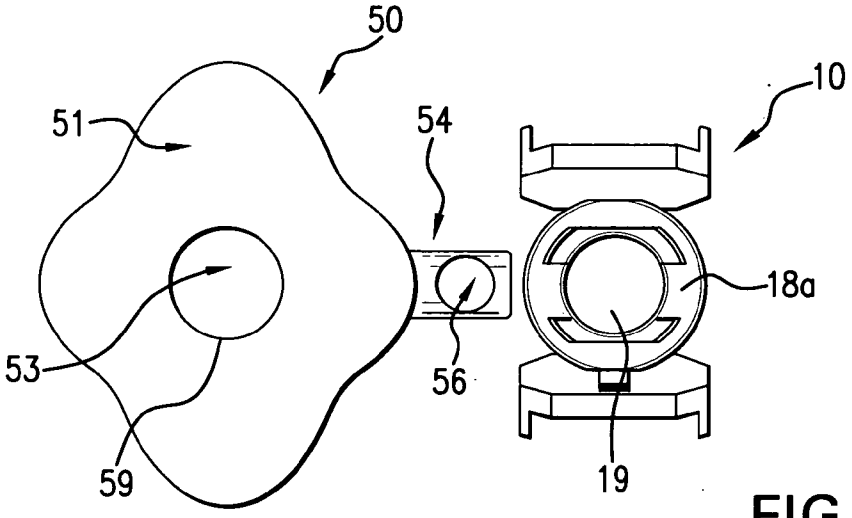

FIG.5B

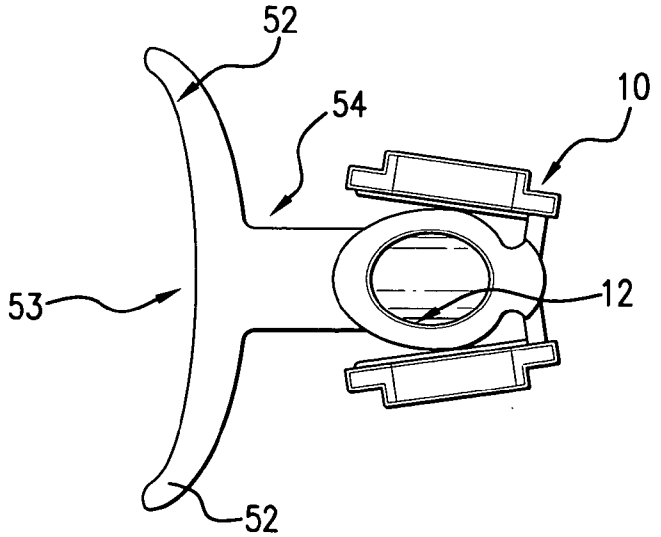

FIG.5C

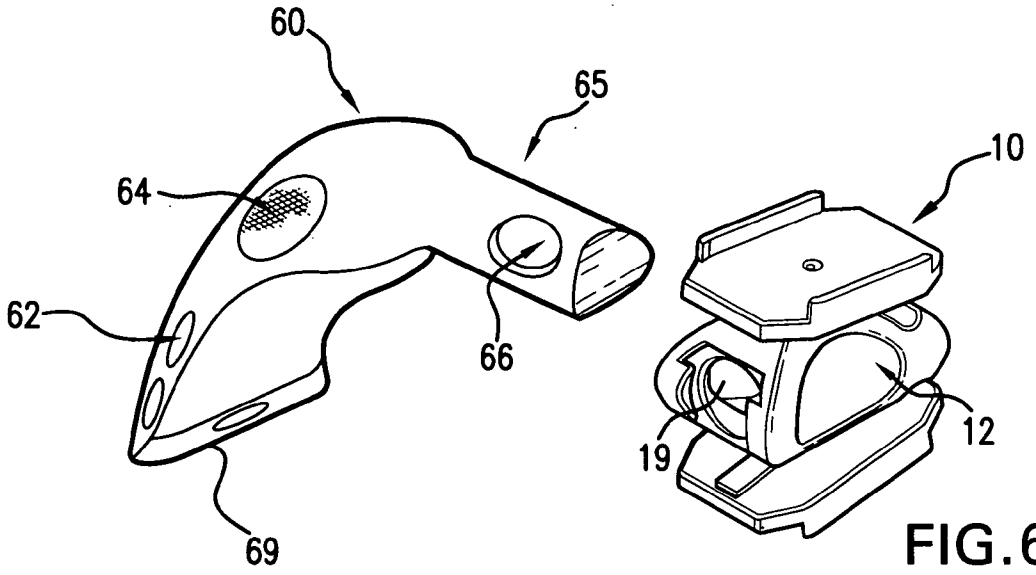

FIG.6A

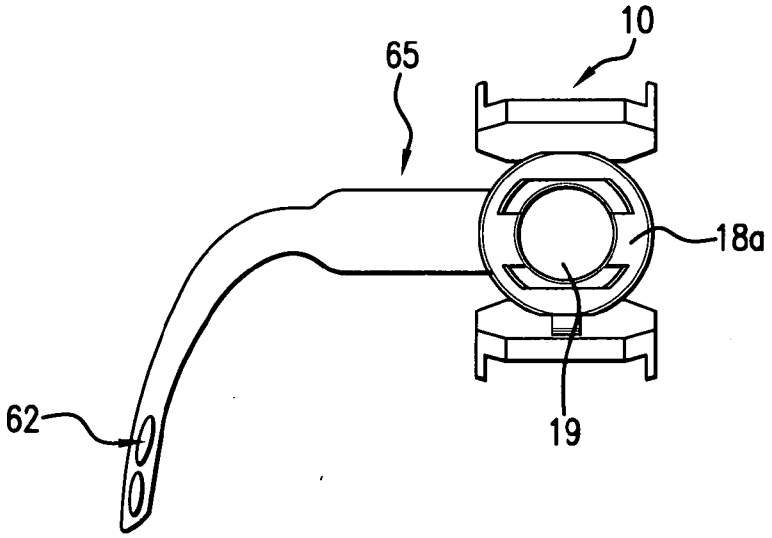

FIG.6B

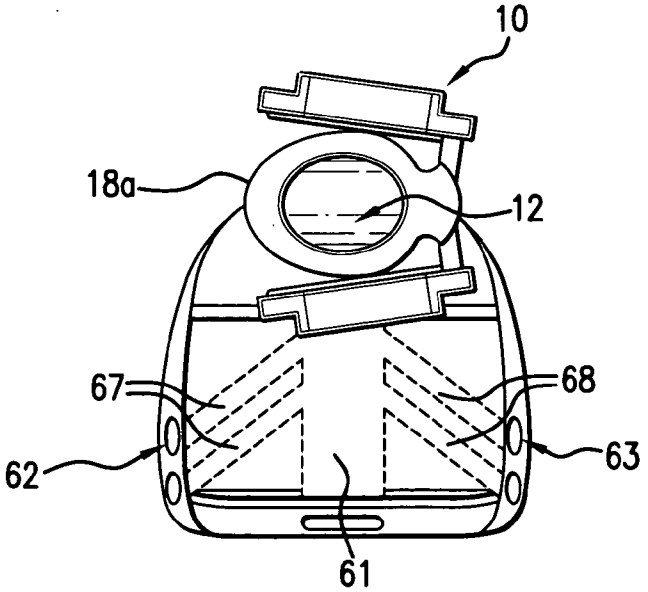

FIG.6C

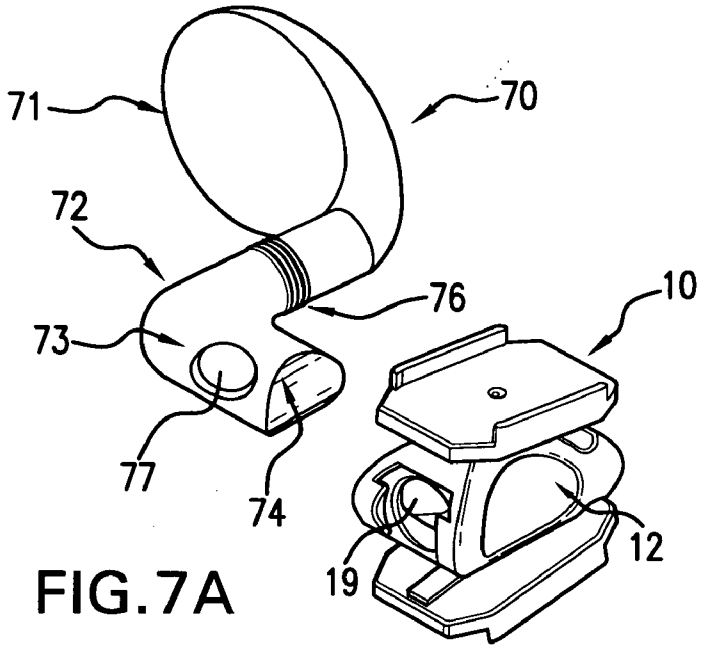

FIG.7A

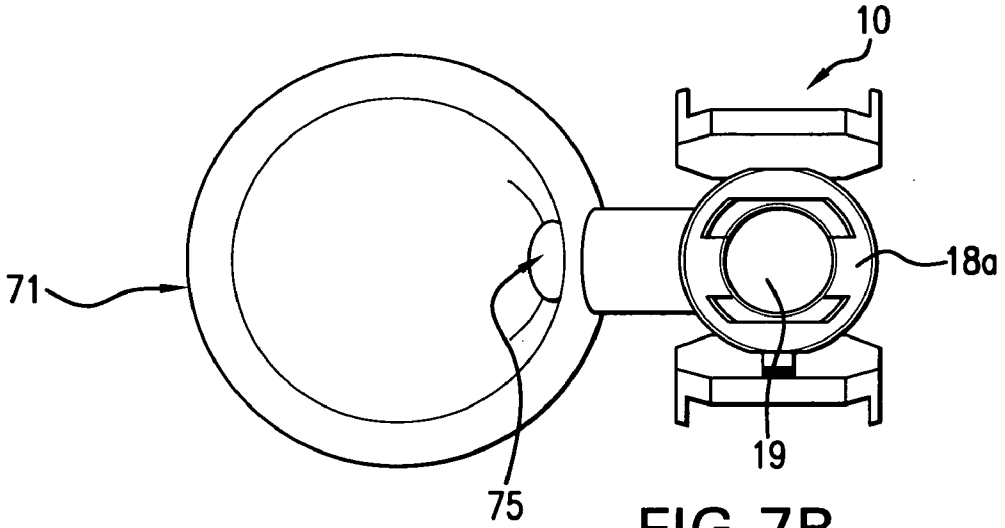

FIG.7B

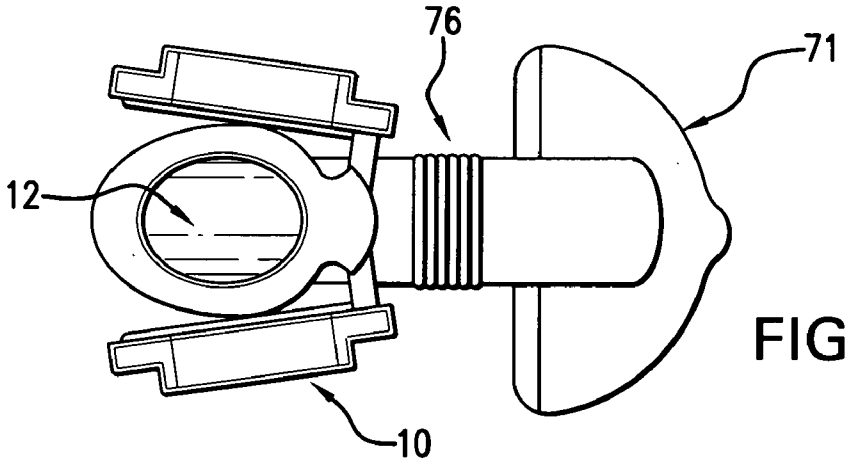

FIG.7C

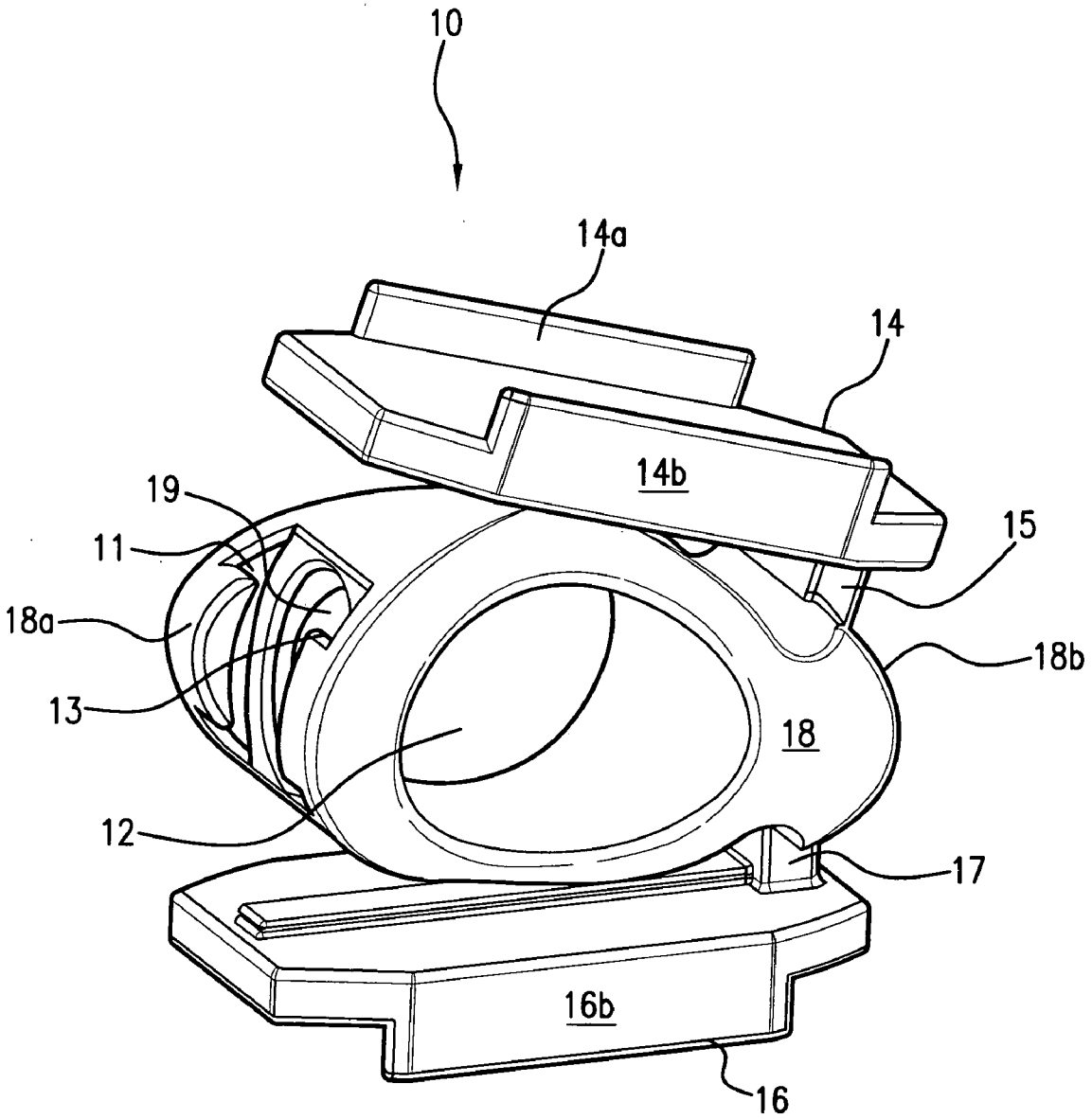

FIG.8

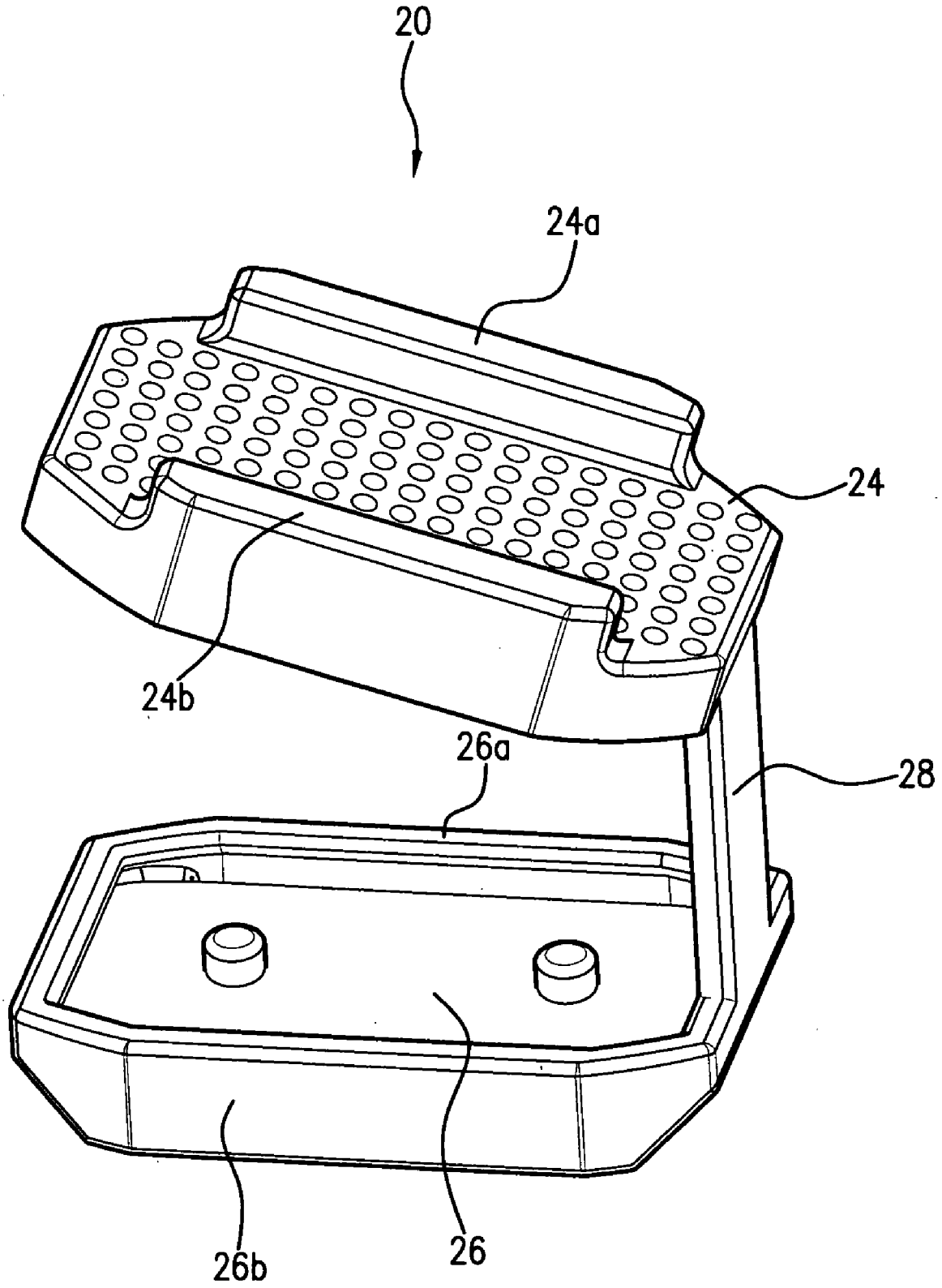

FIG.9

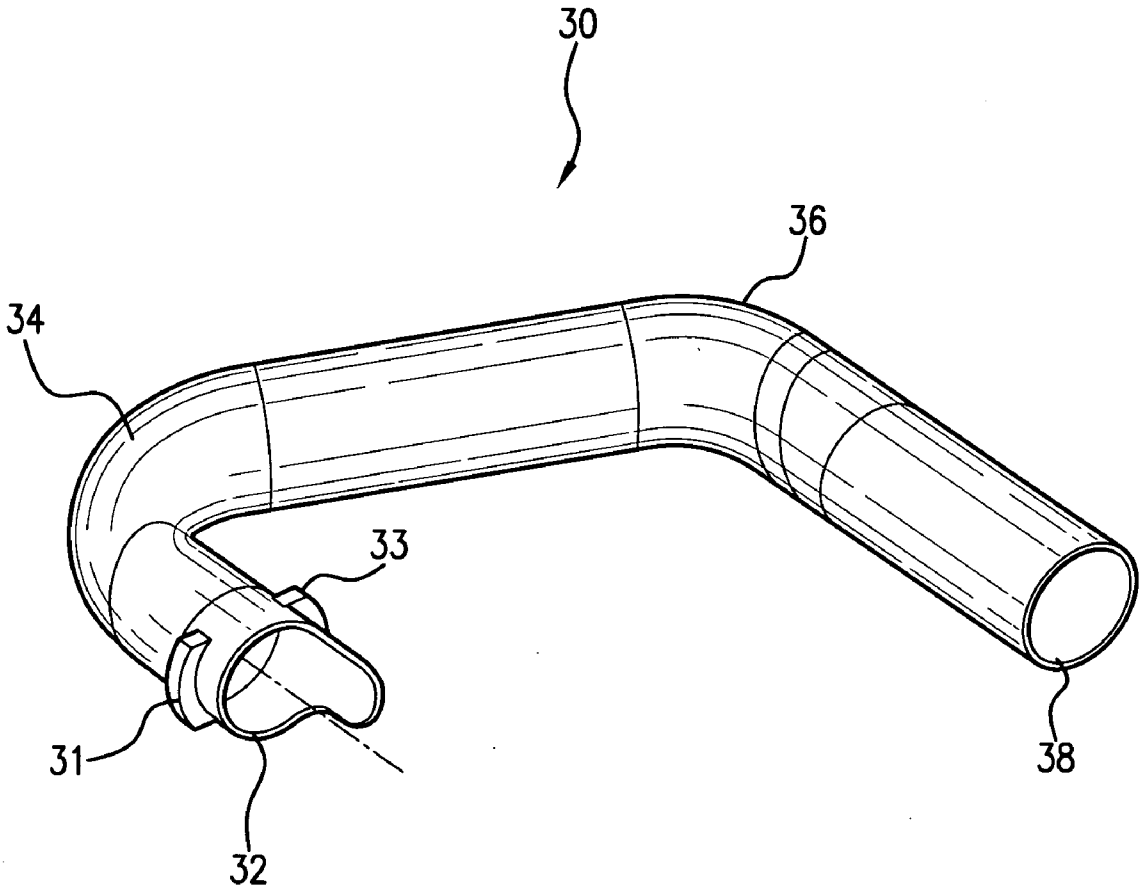

FIG.10

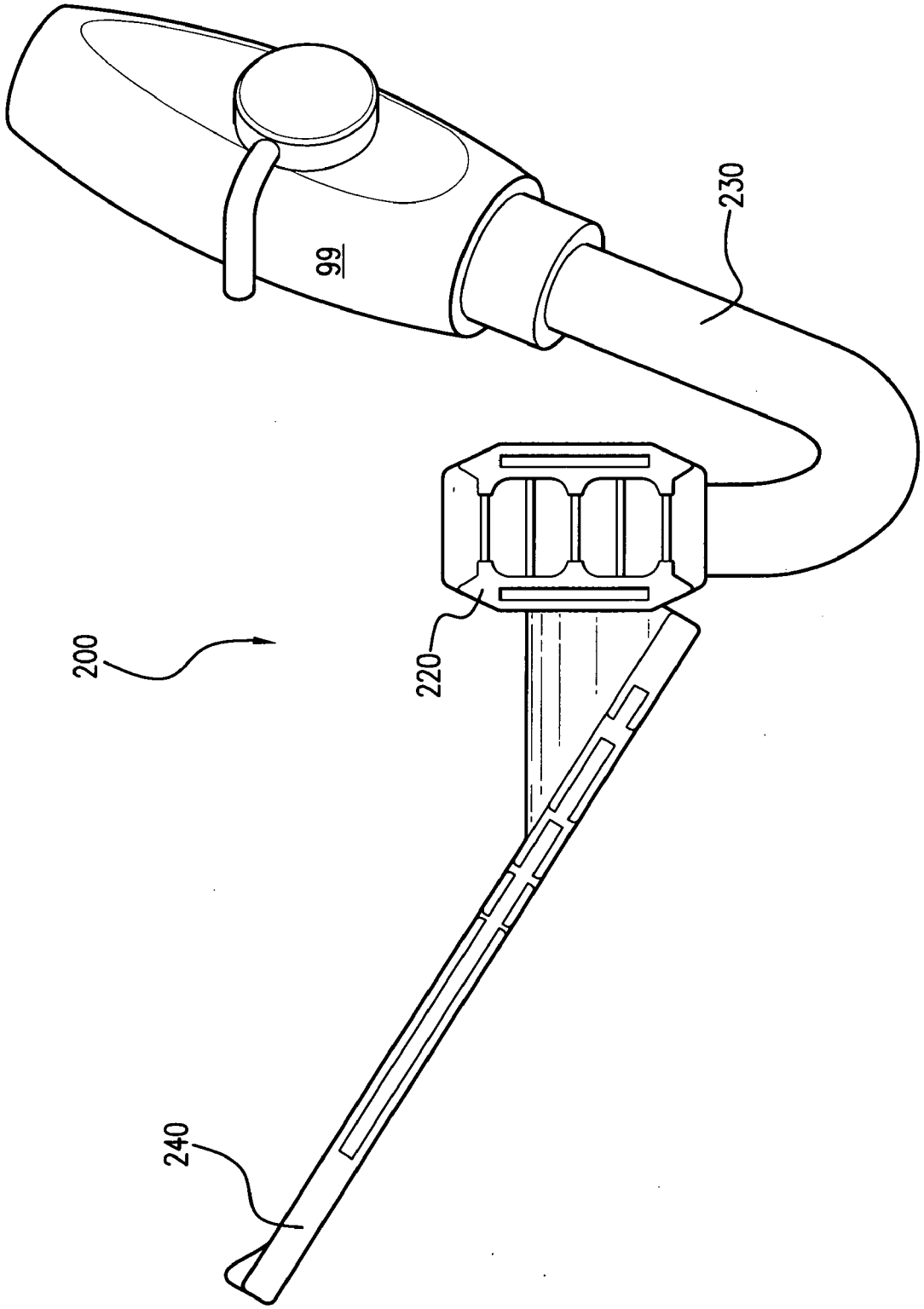

FIG. 11

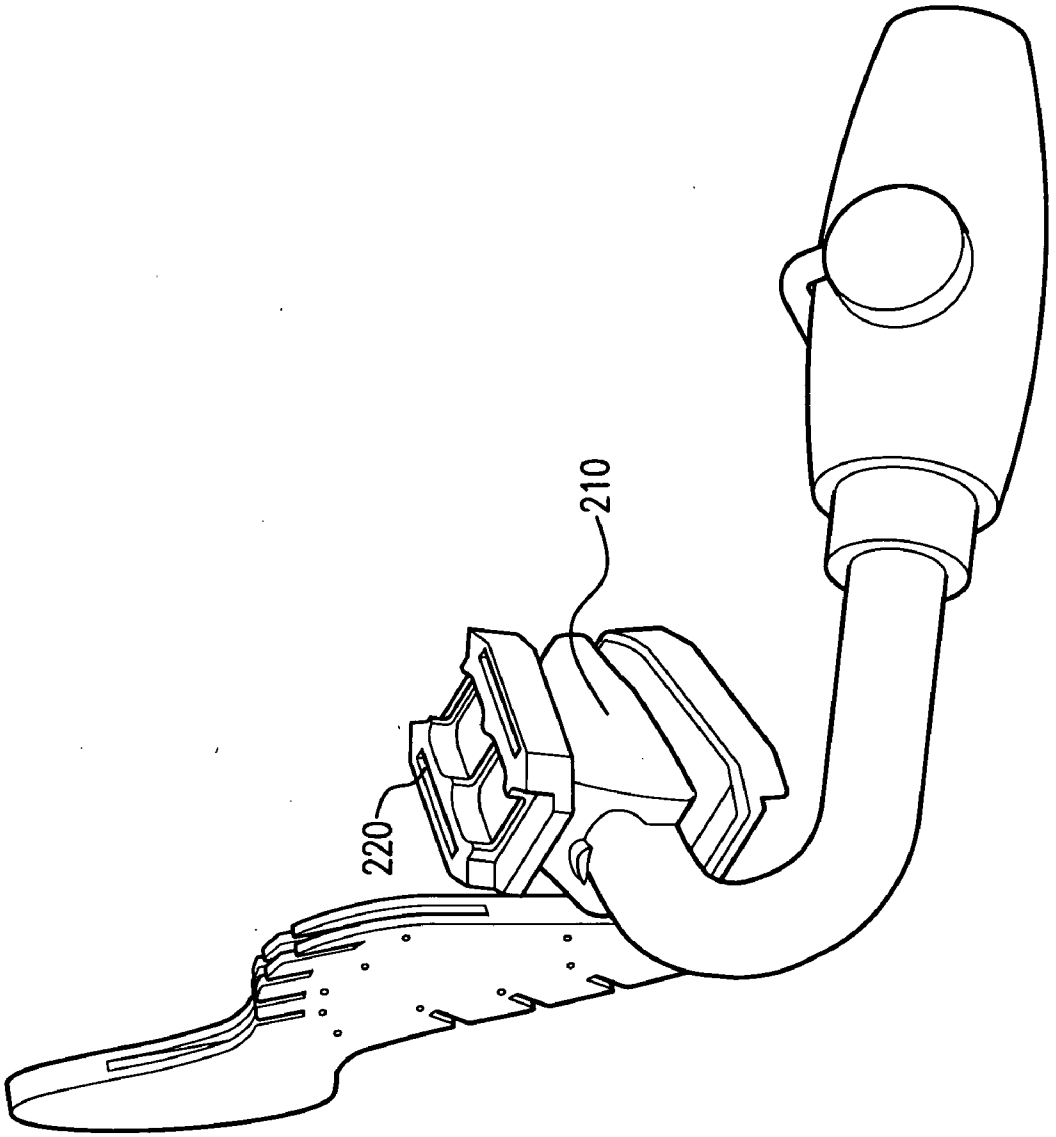

FIG. 12

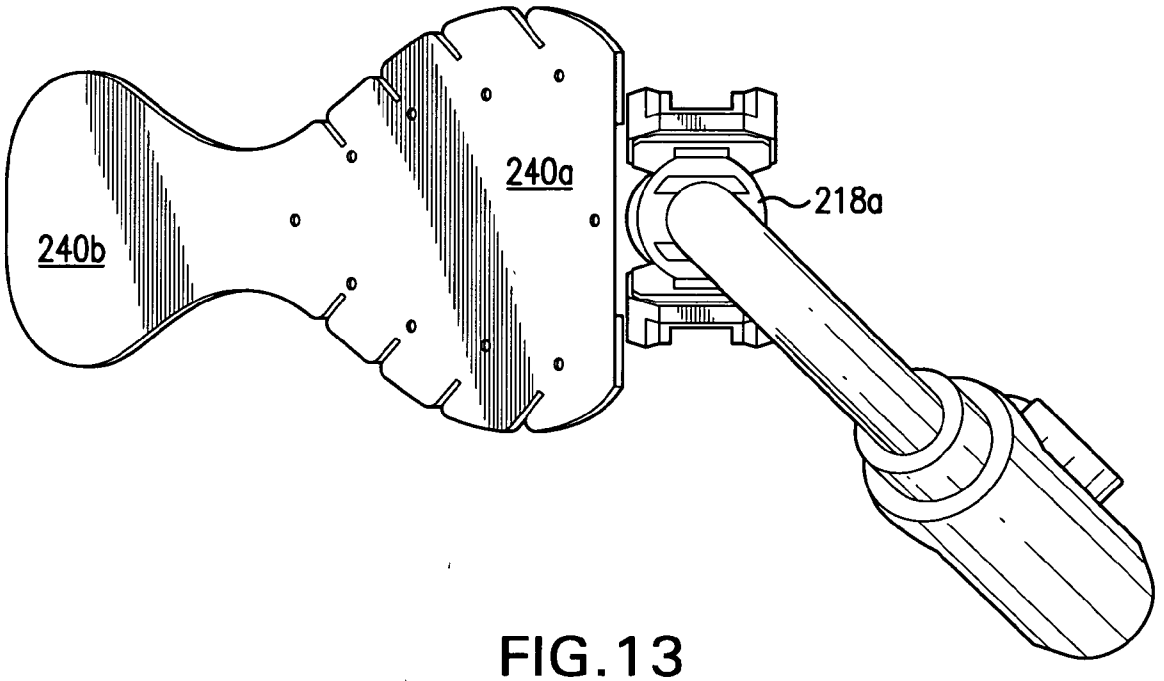

FIG.13

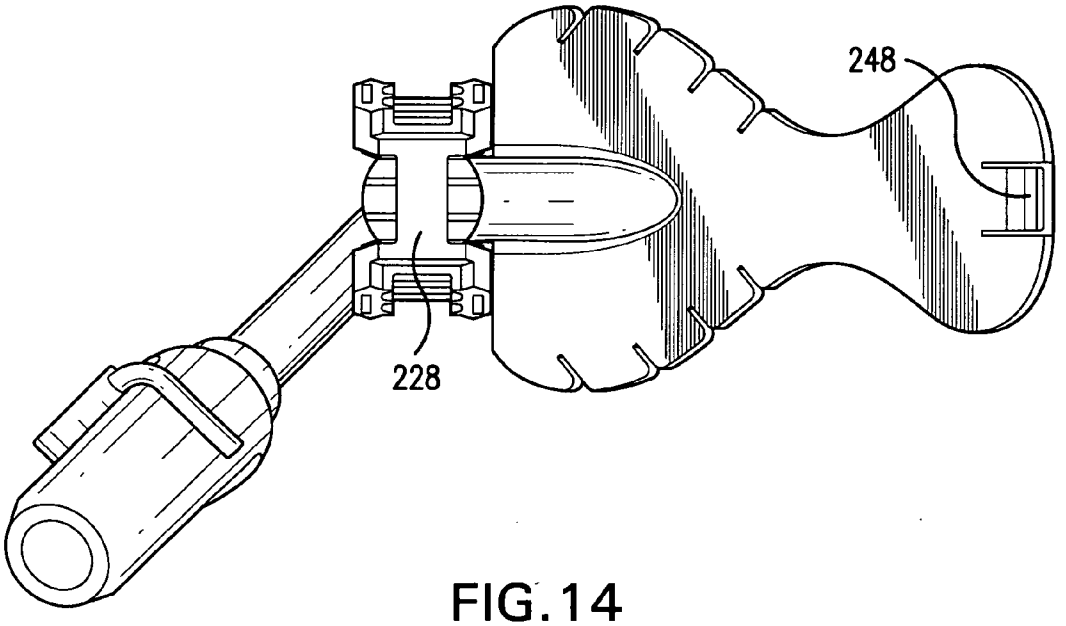

FIG.14

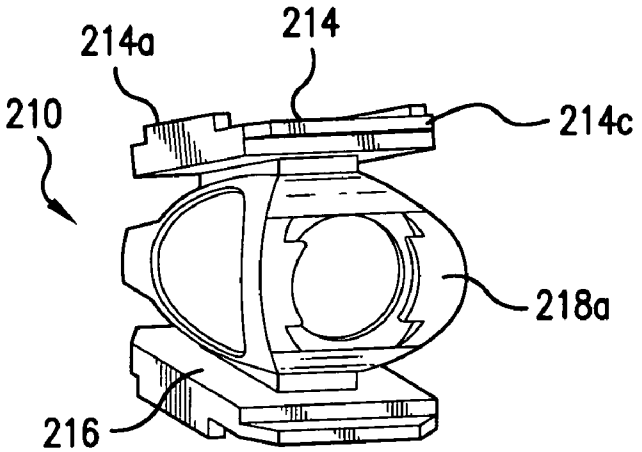

FIG.15A

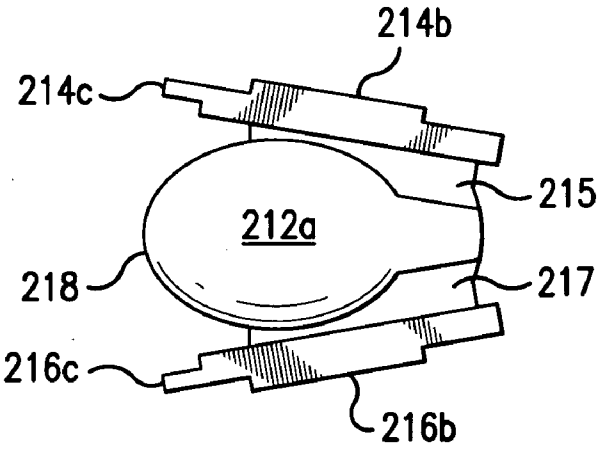

FIG.15B

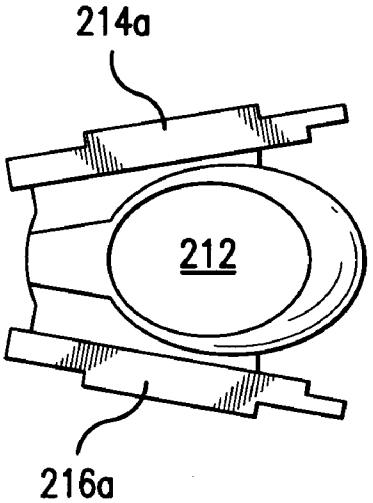

FIG.15C

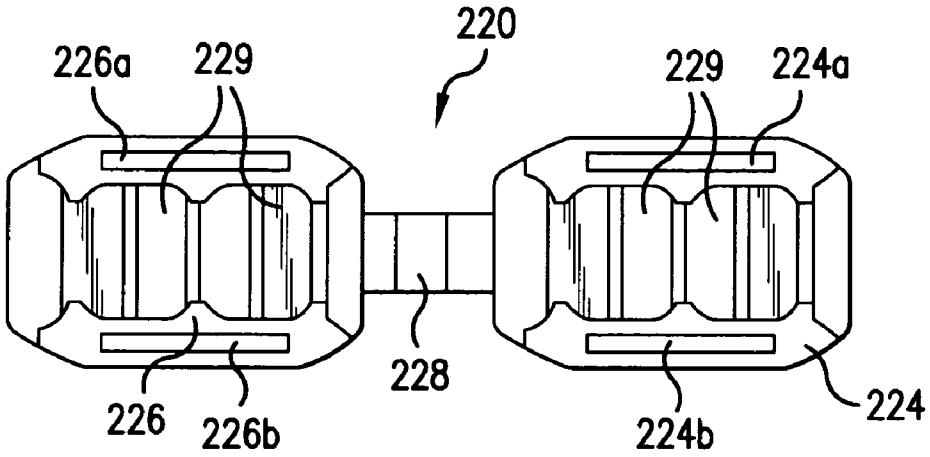

FIG.16A

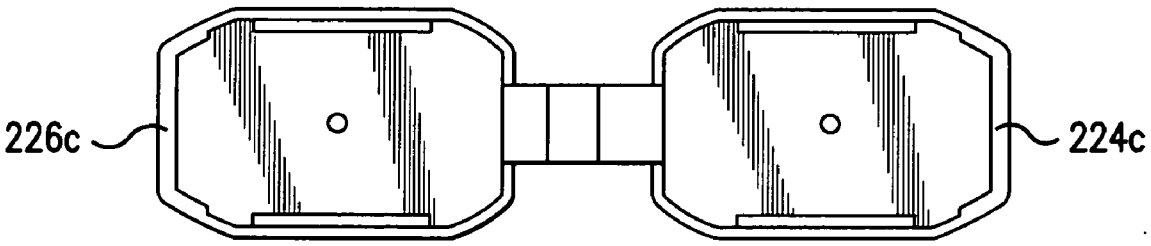

FIG.16B

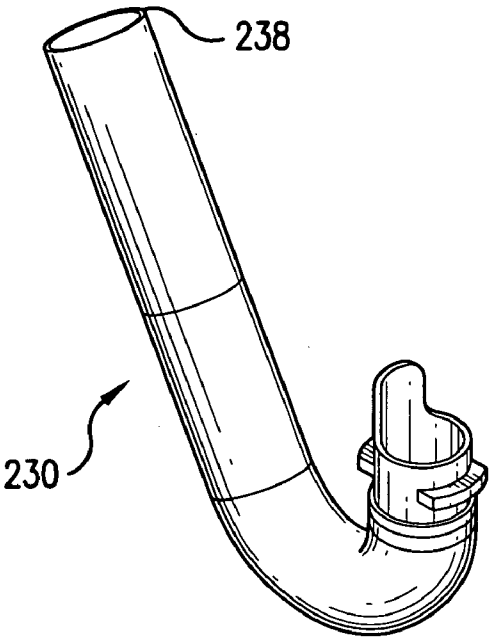

FIG.17A

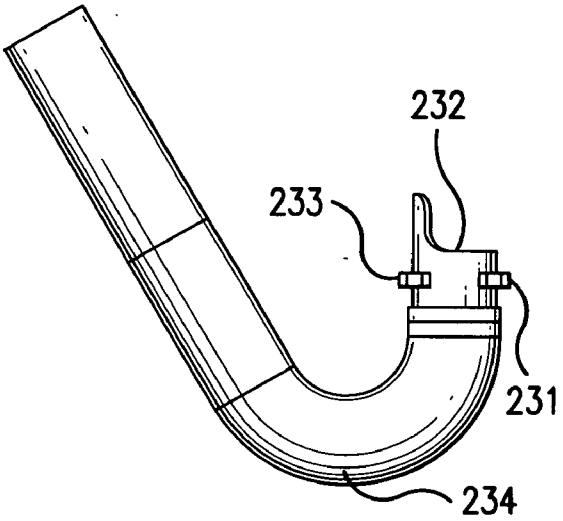

FIG.17B

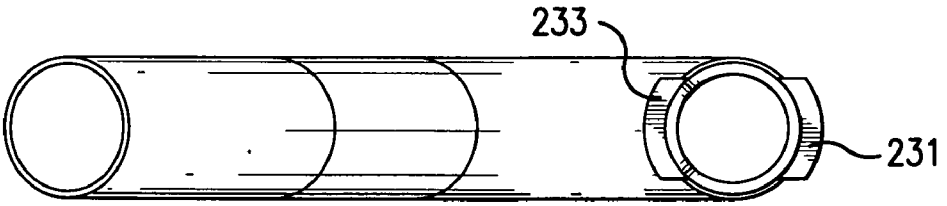

FIG.17C

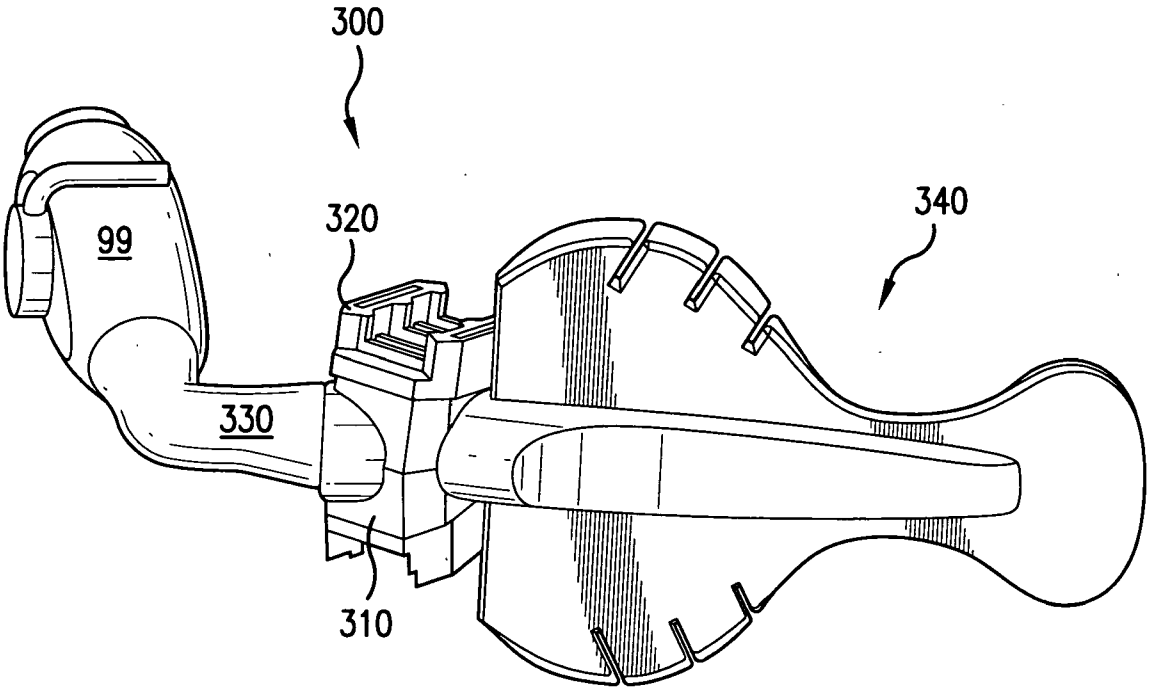

FIG.18

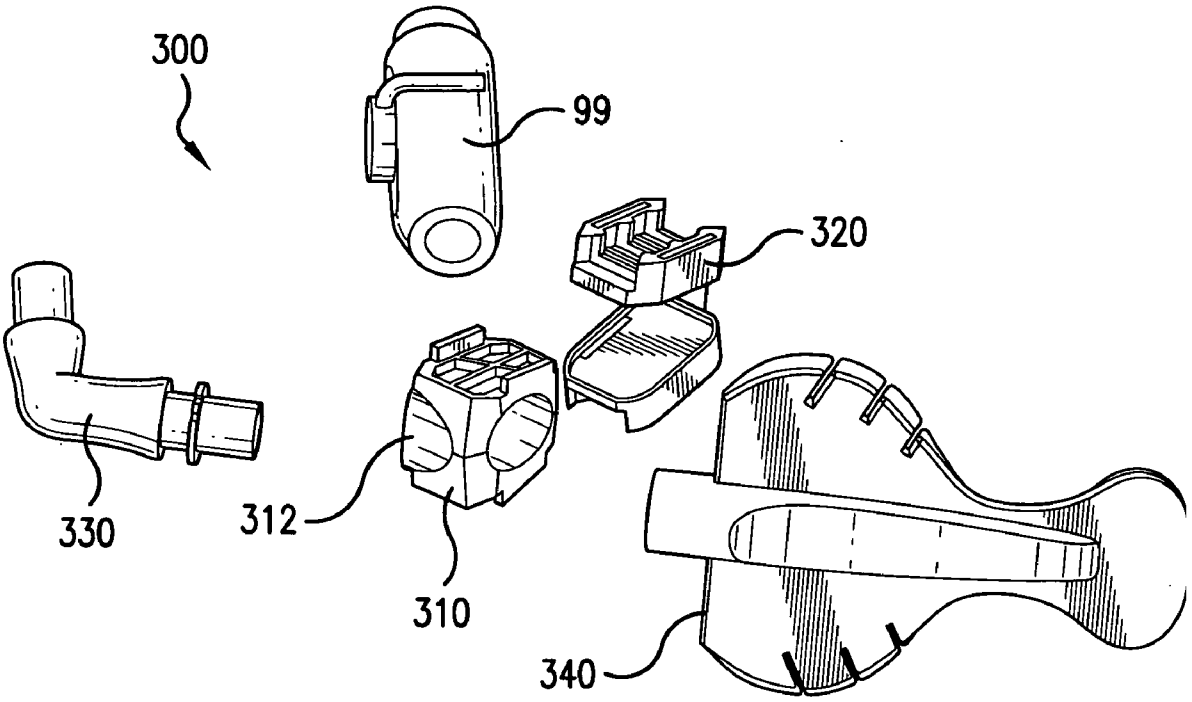

FIG. 19

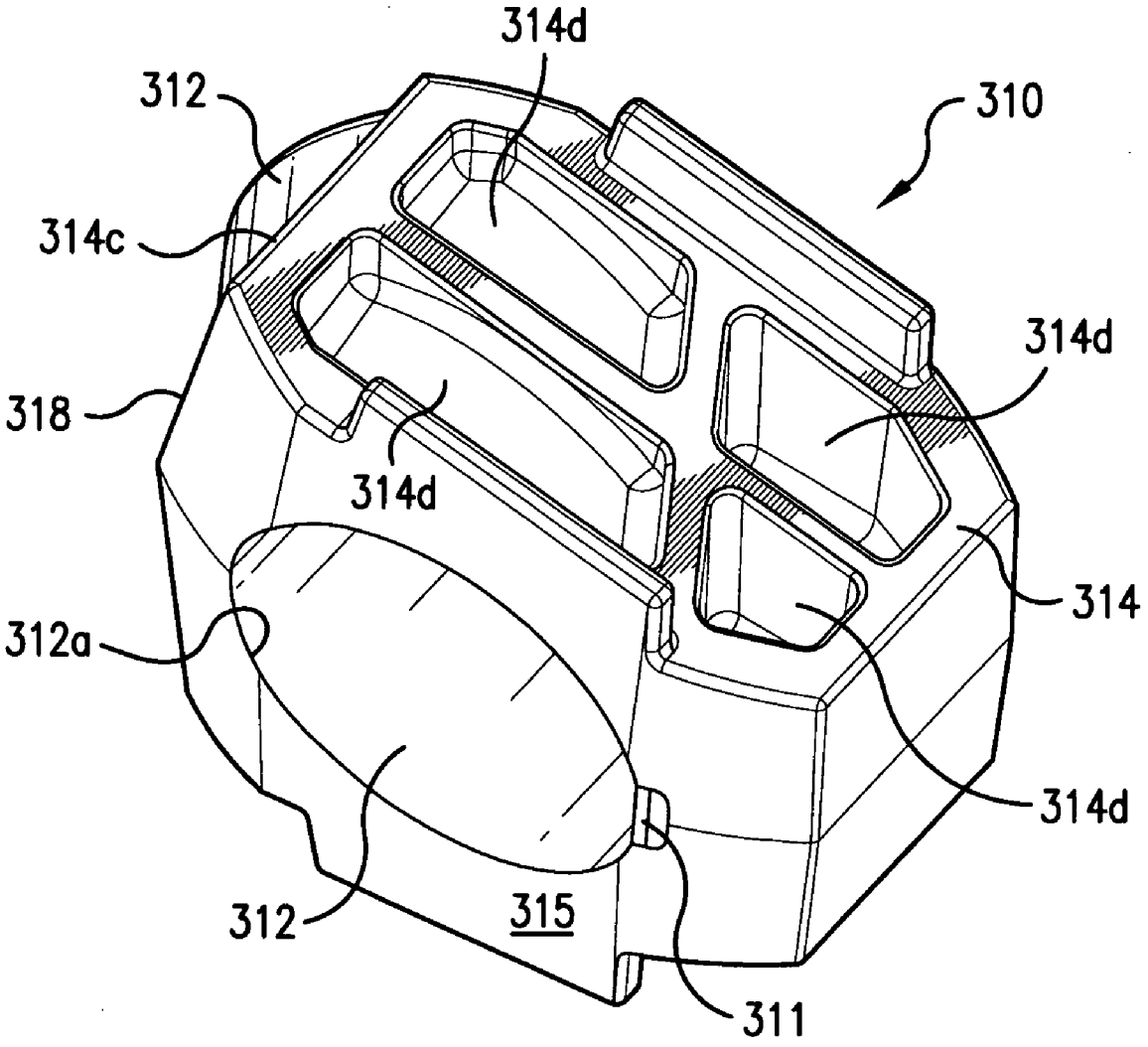

FIG.20A

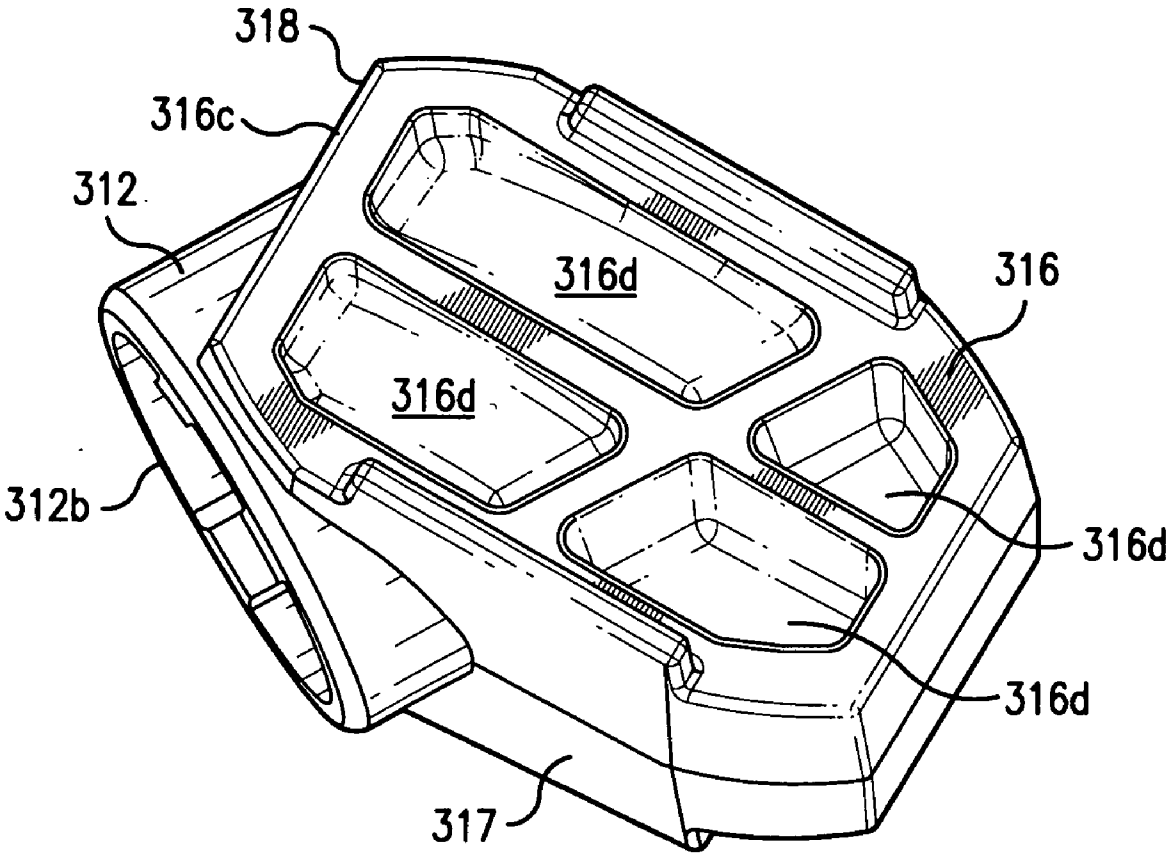

FIG.20B

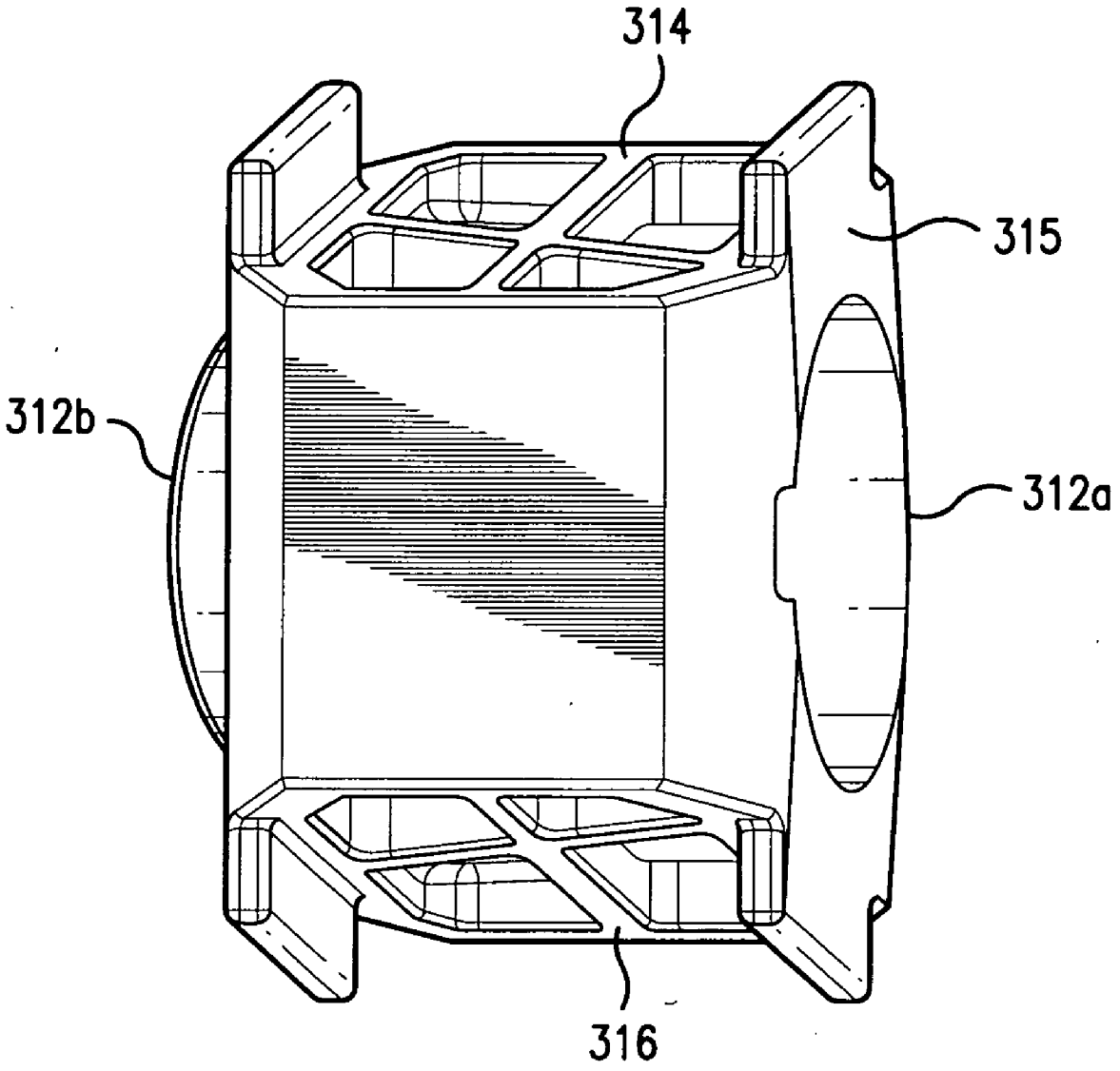

FIG.20C

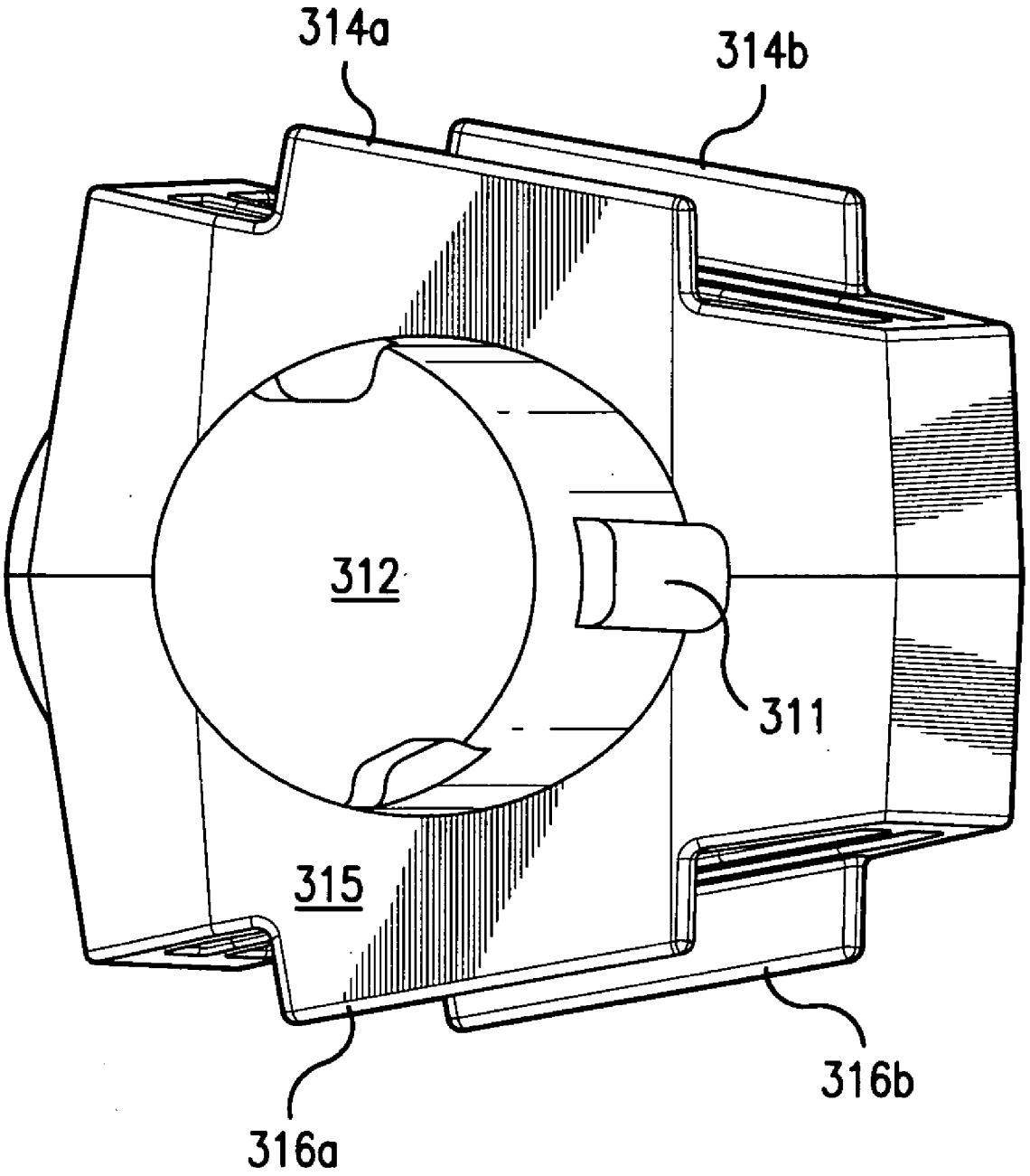

FIG.20D

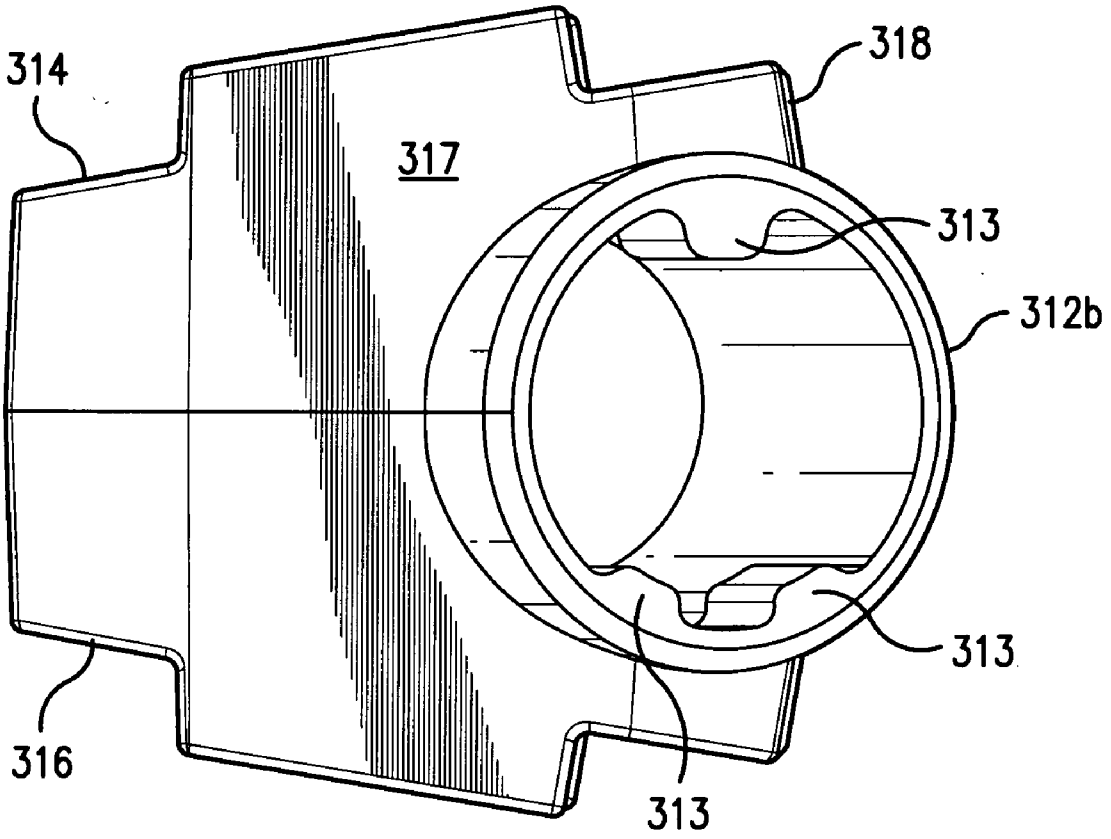

FIG.20E

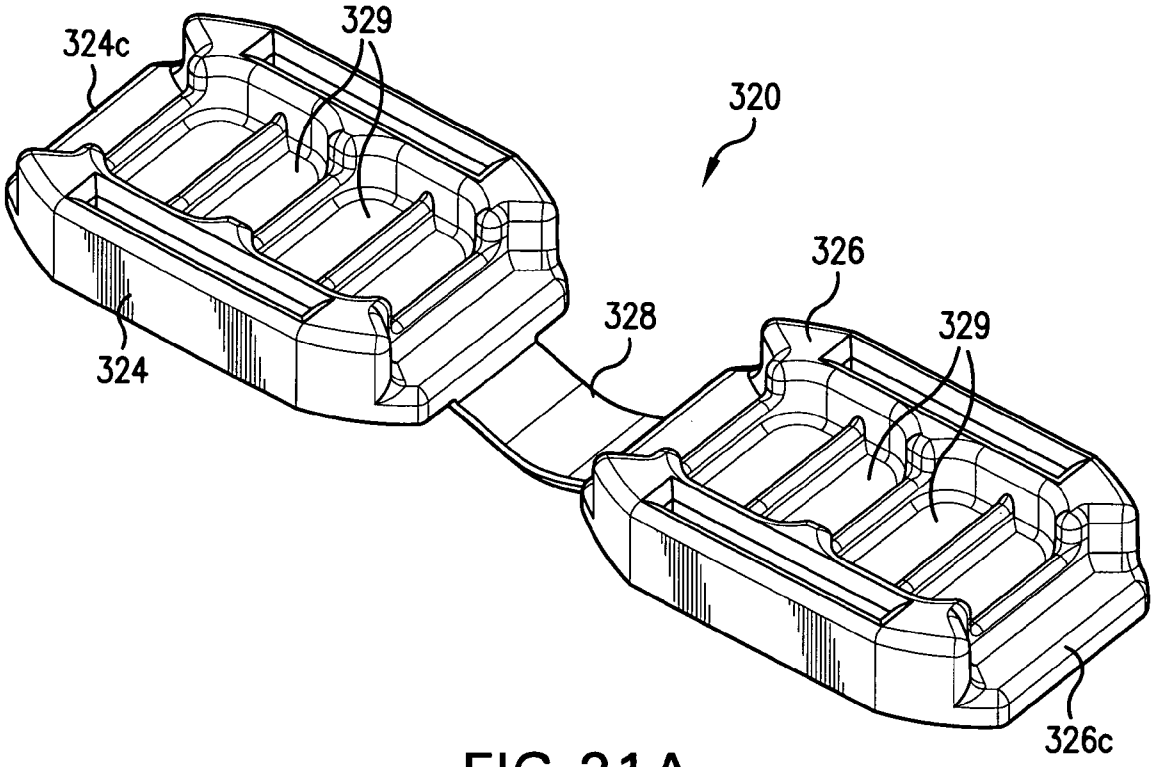

FIG.21A

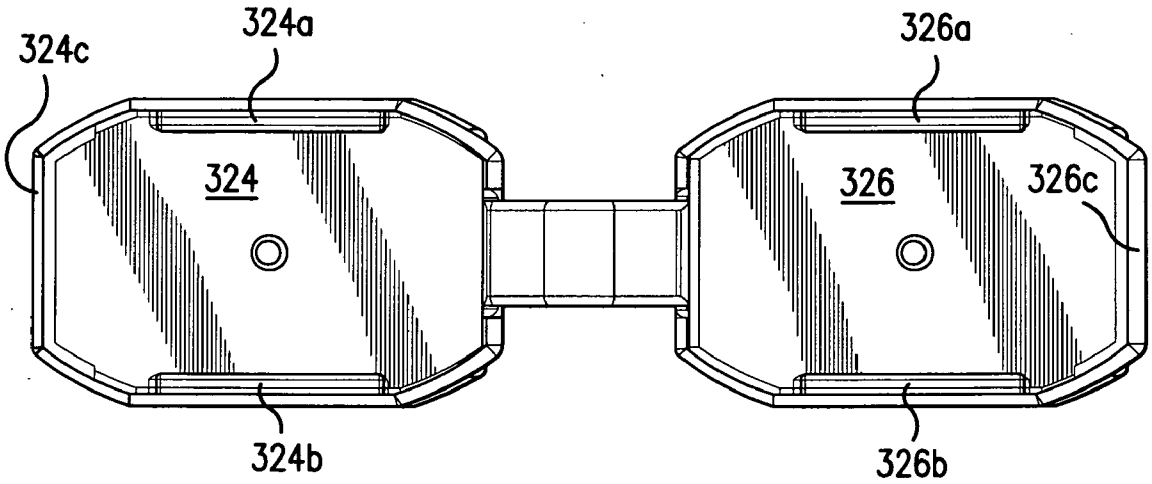

FIG.21B

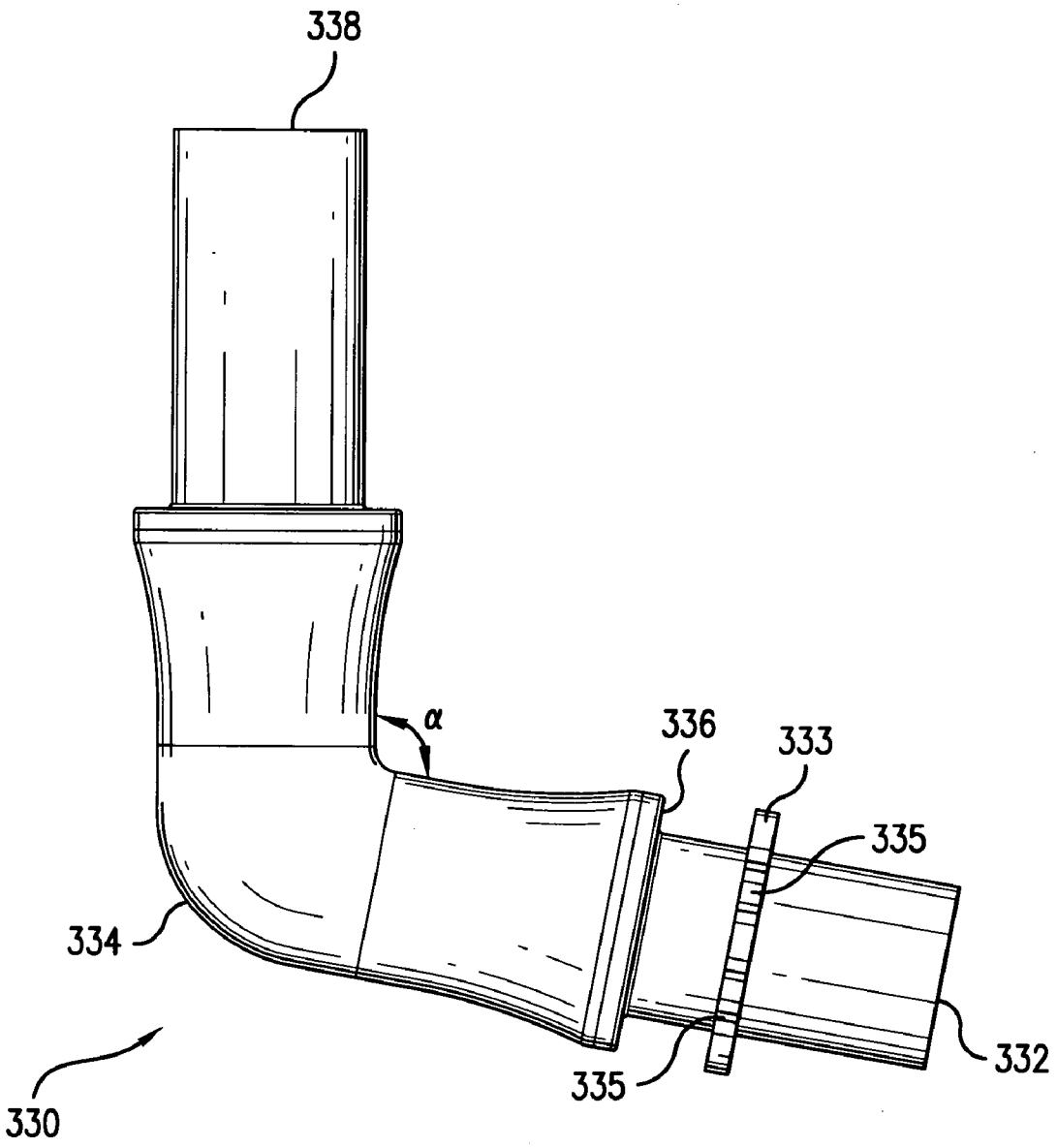

FIG.22A

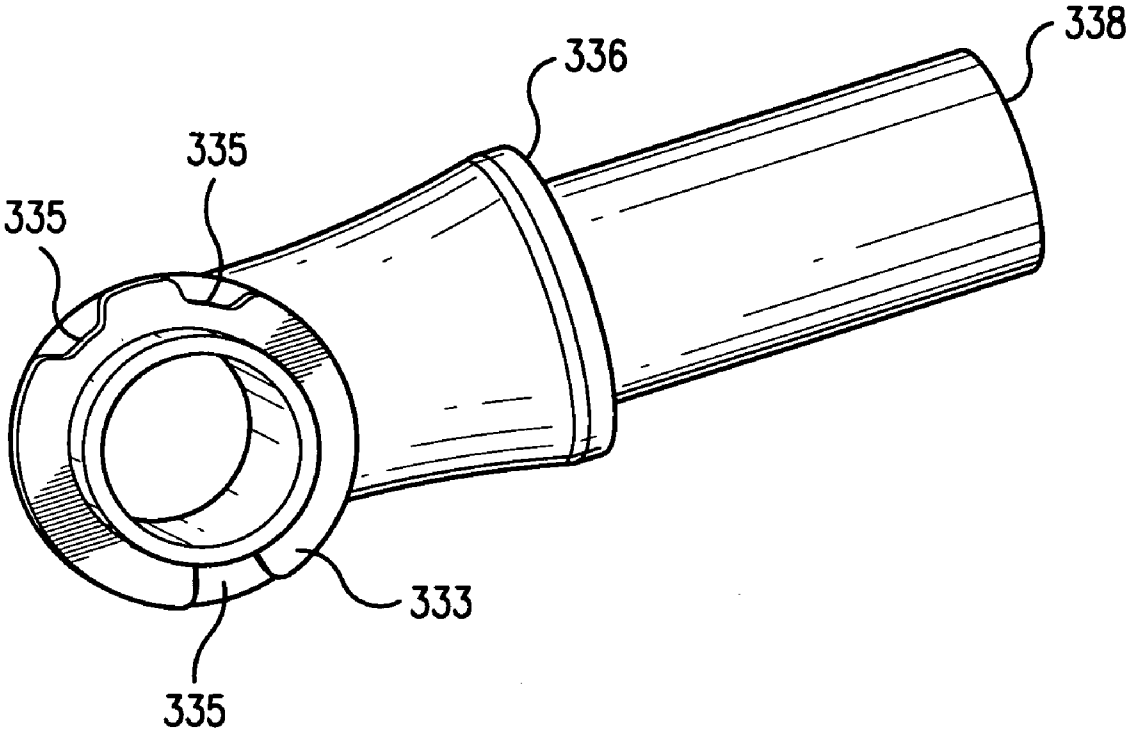

FIG.22B

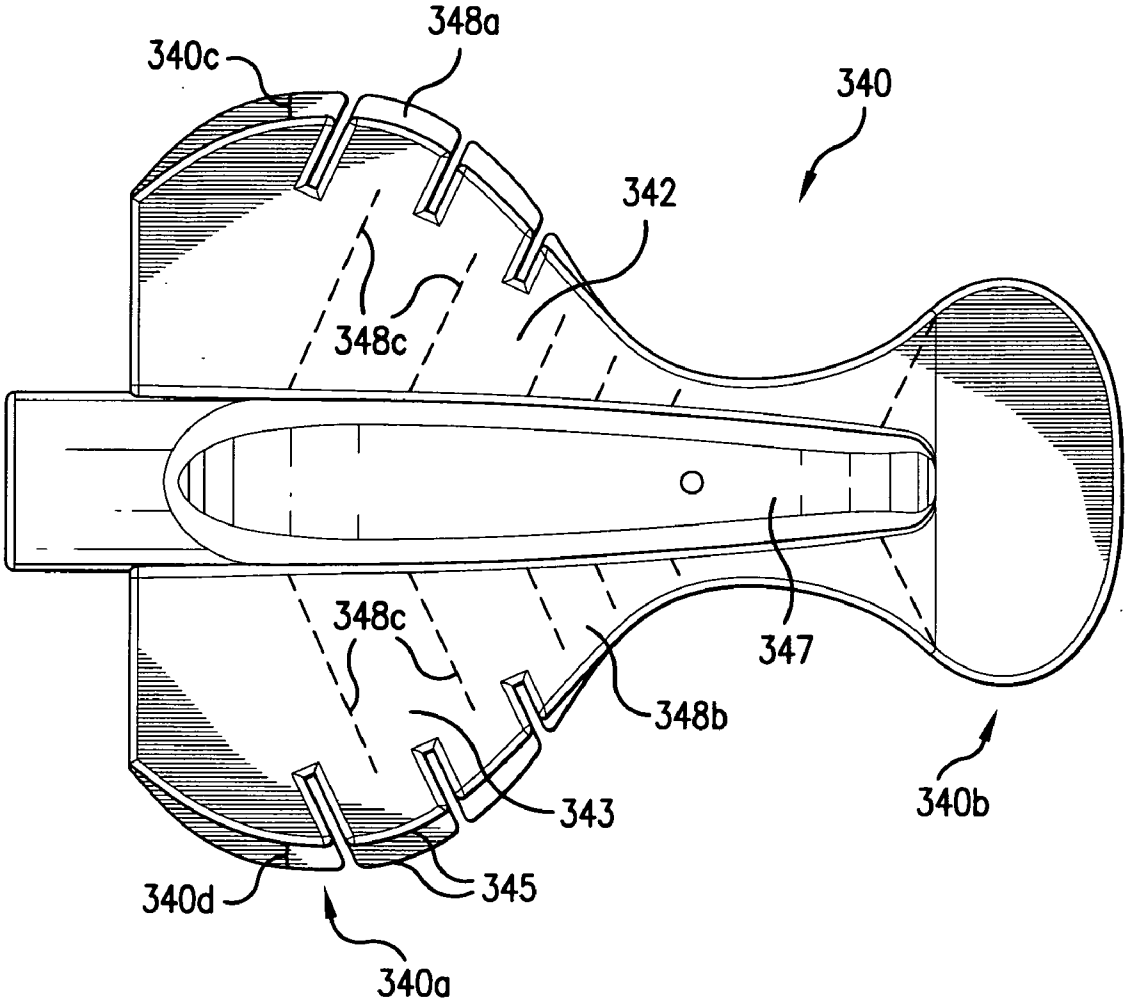

FIG.23A

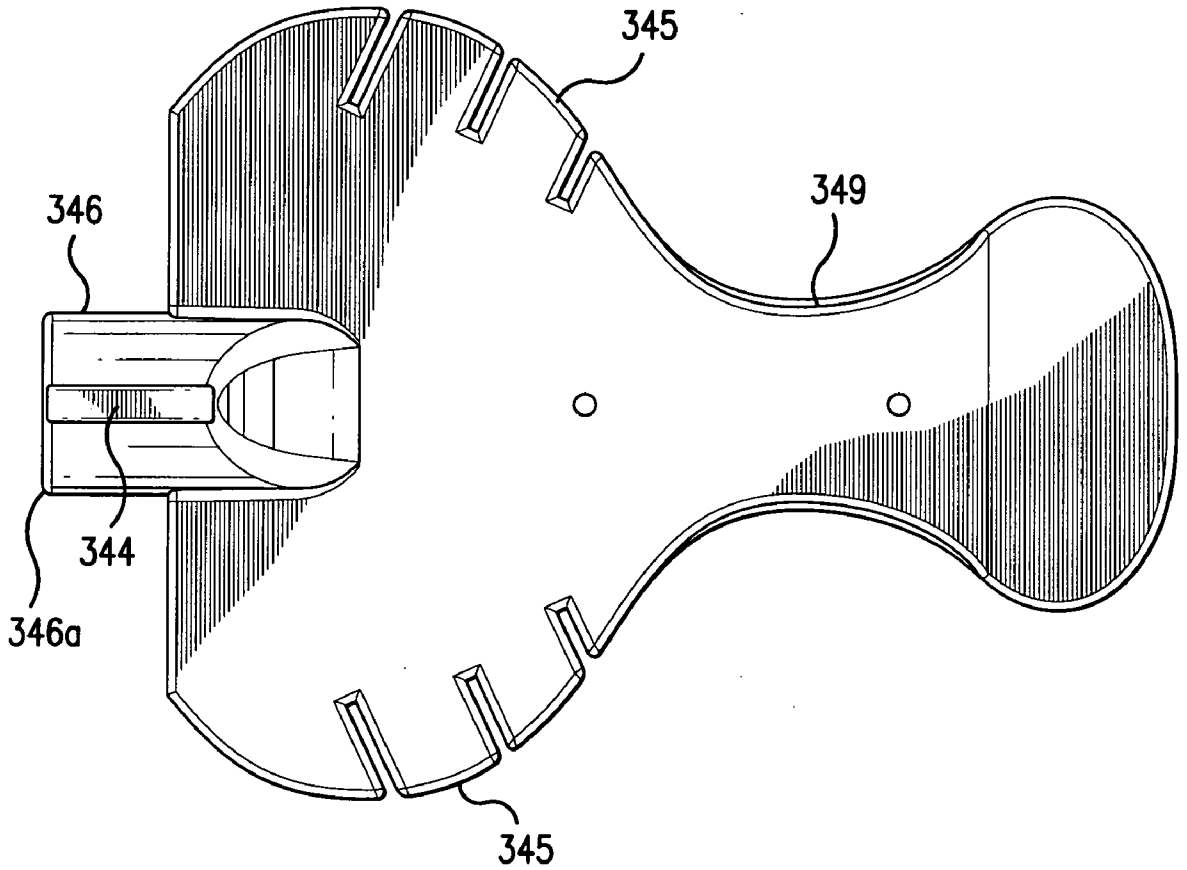

FIG.23B

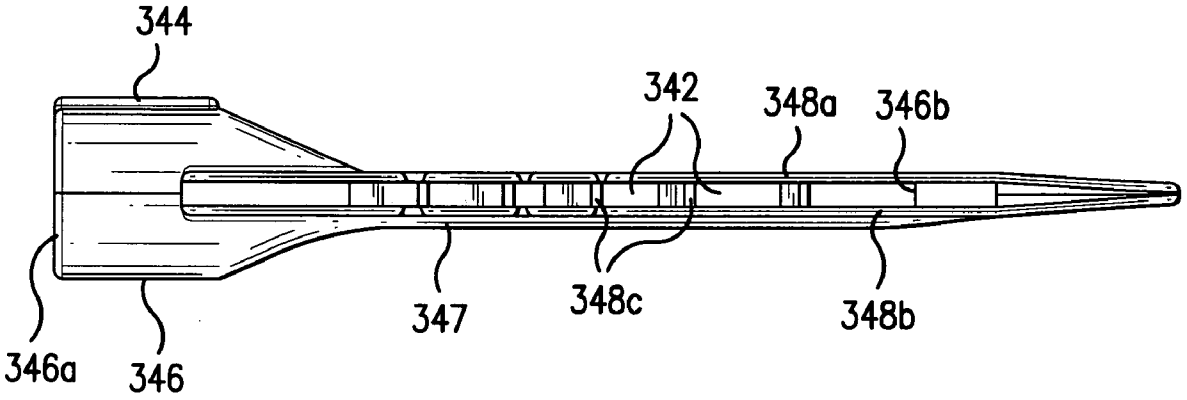

FIG.23C

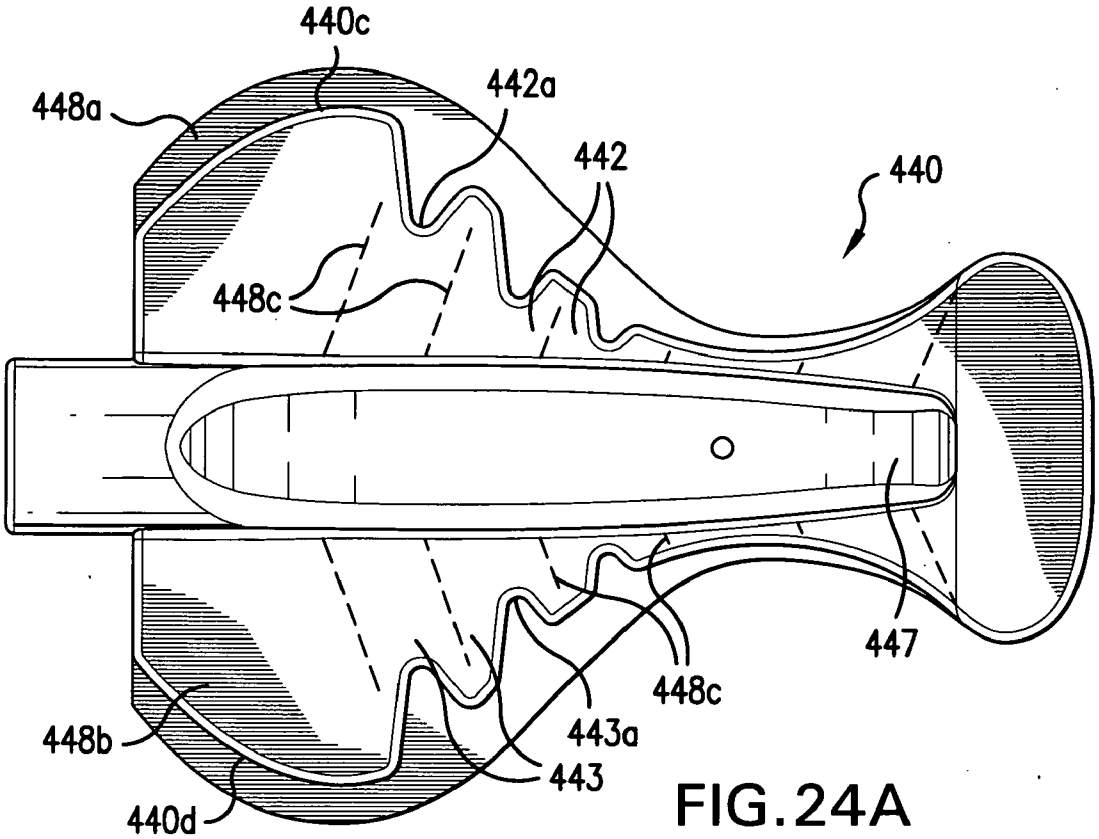

FIG.24A

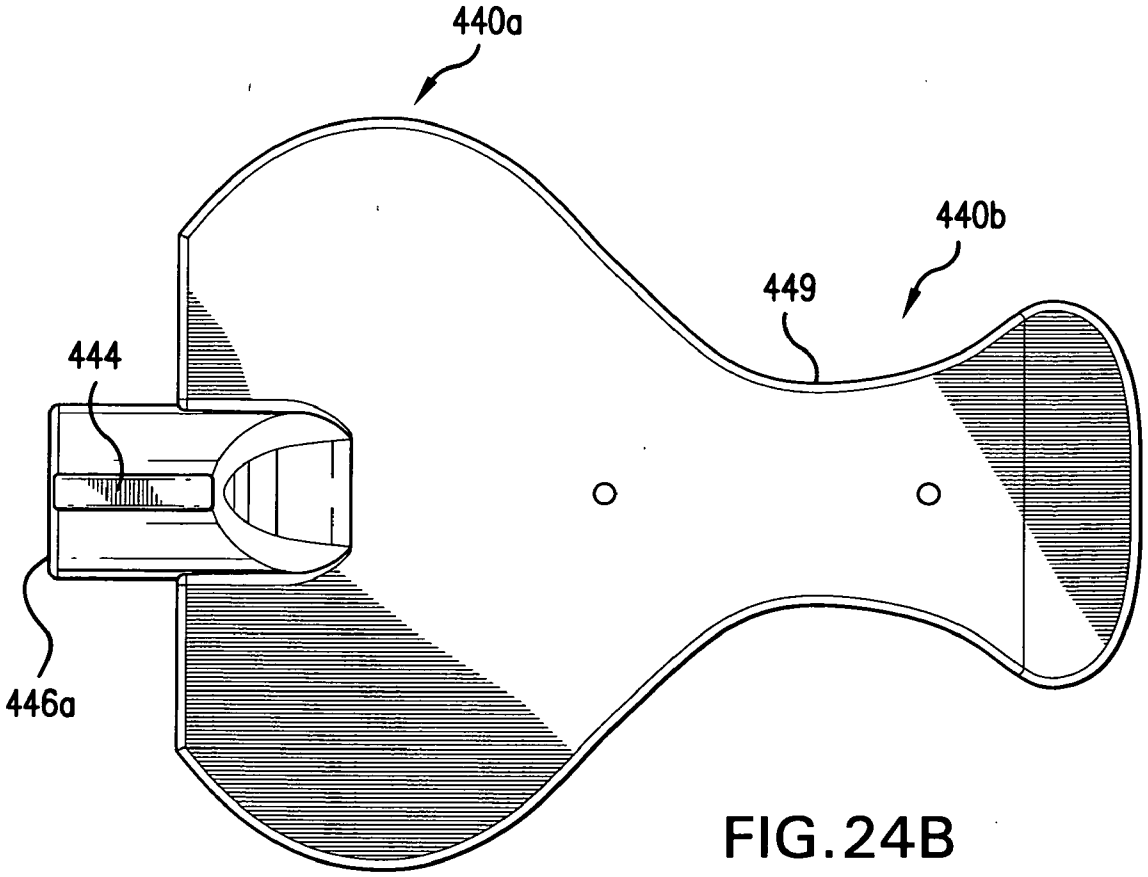

FIG.24B

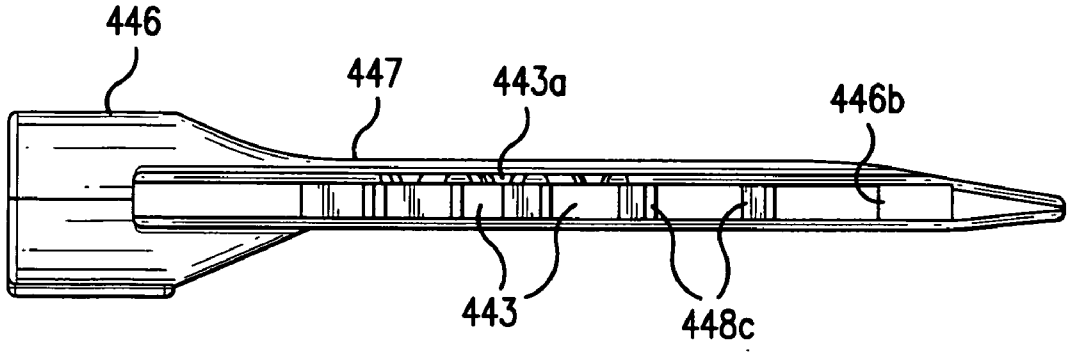

FIG.24C

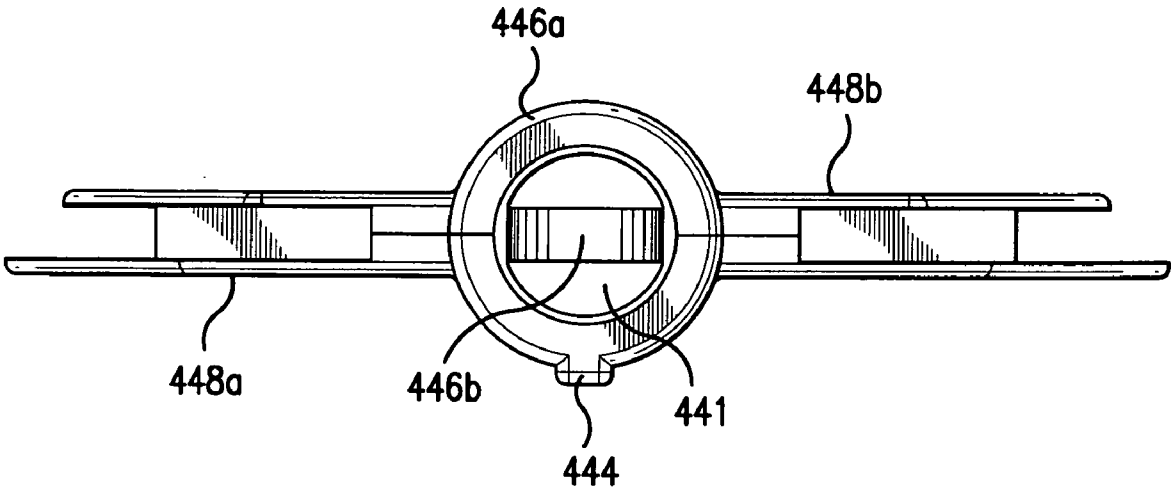

FIG.24D

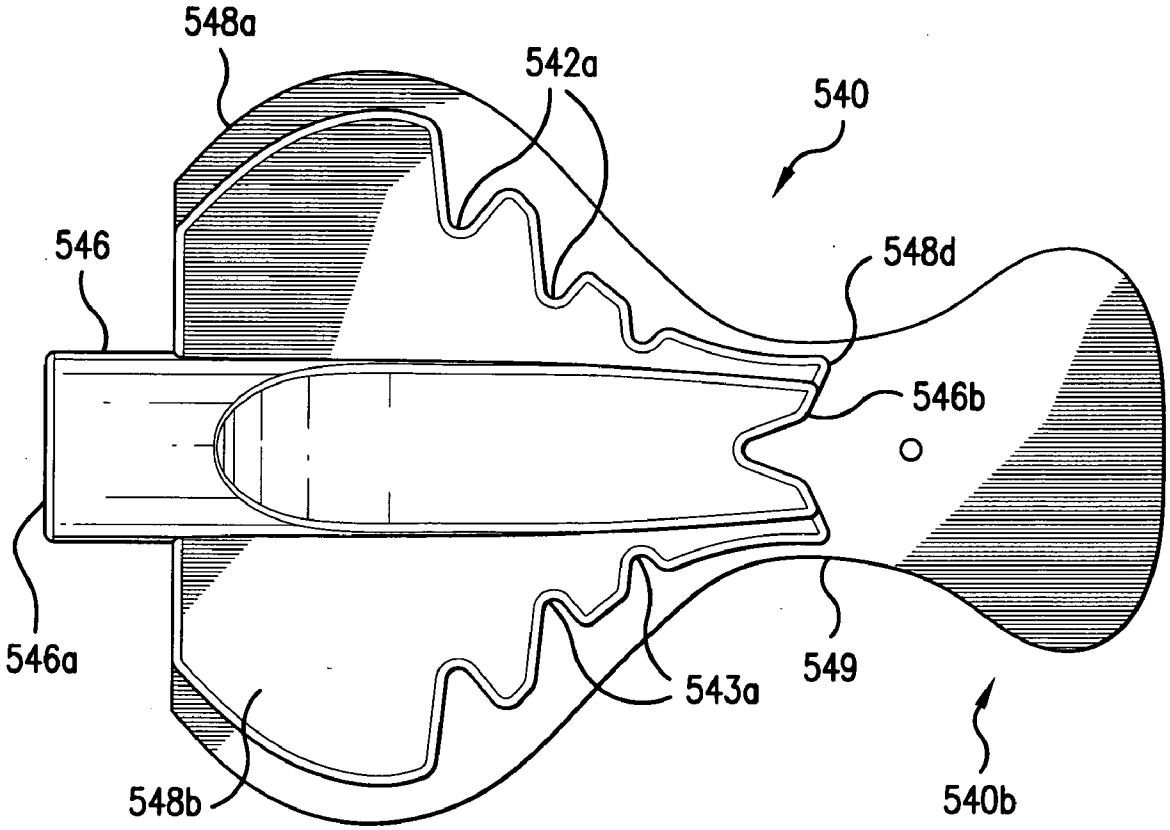

FIG.25A

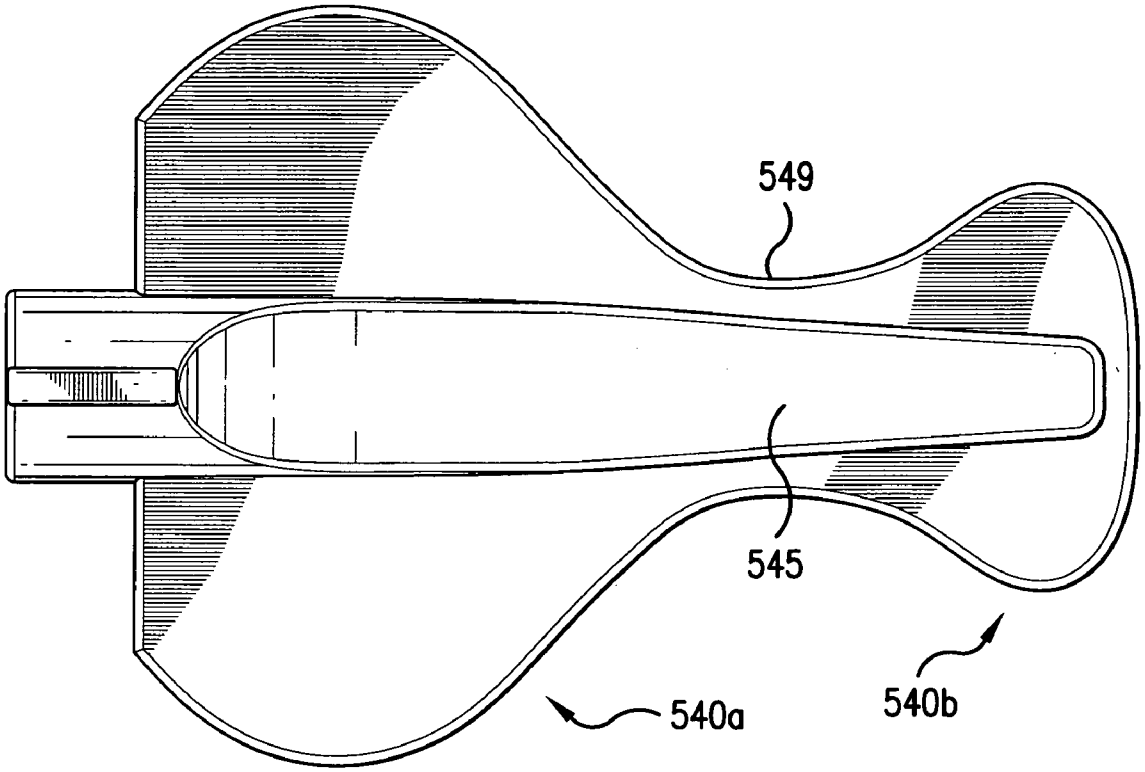

FIG.25B

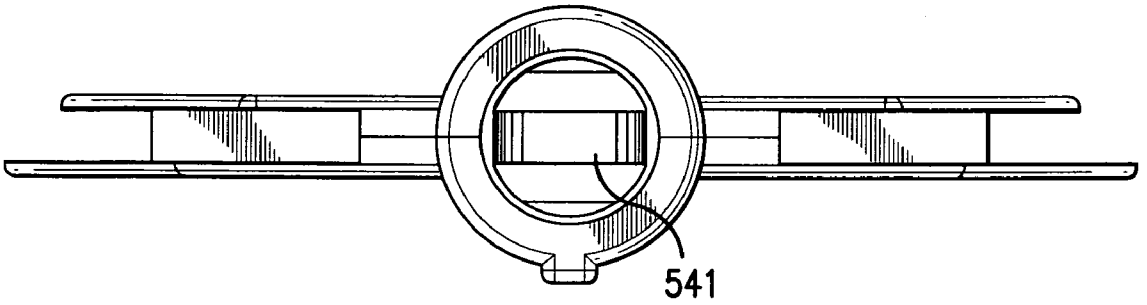

FIG.25C

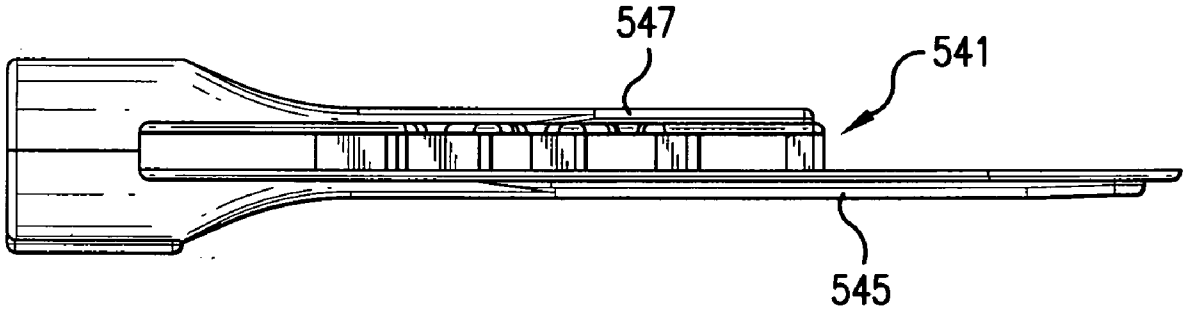

FIG.25D

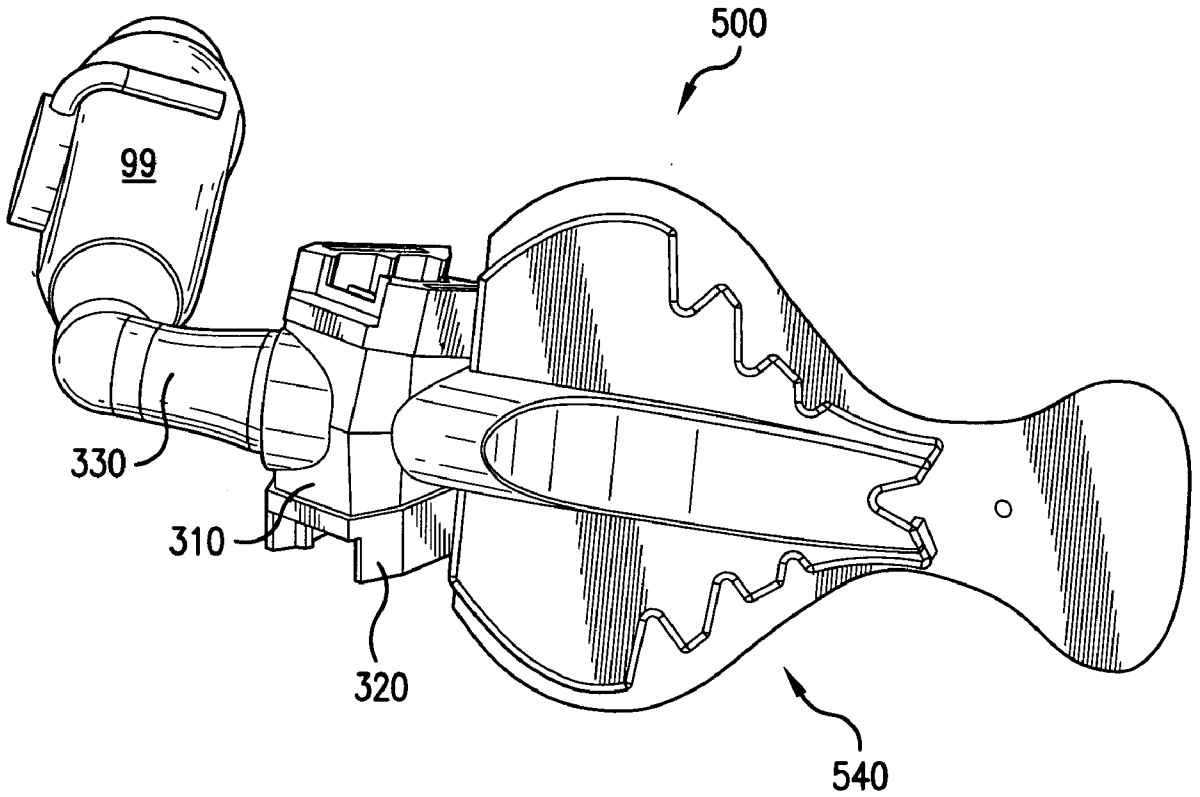

FIG.25E

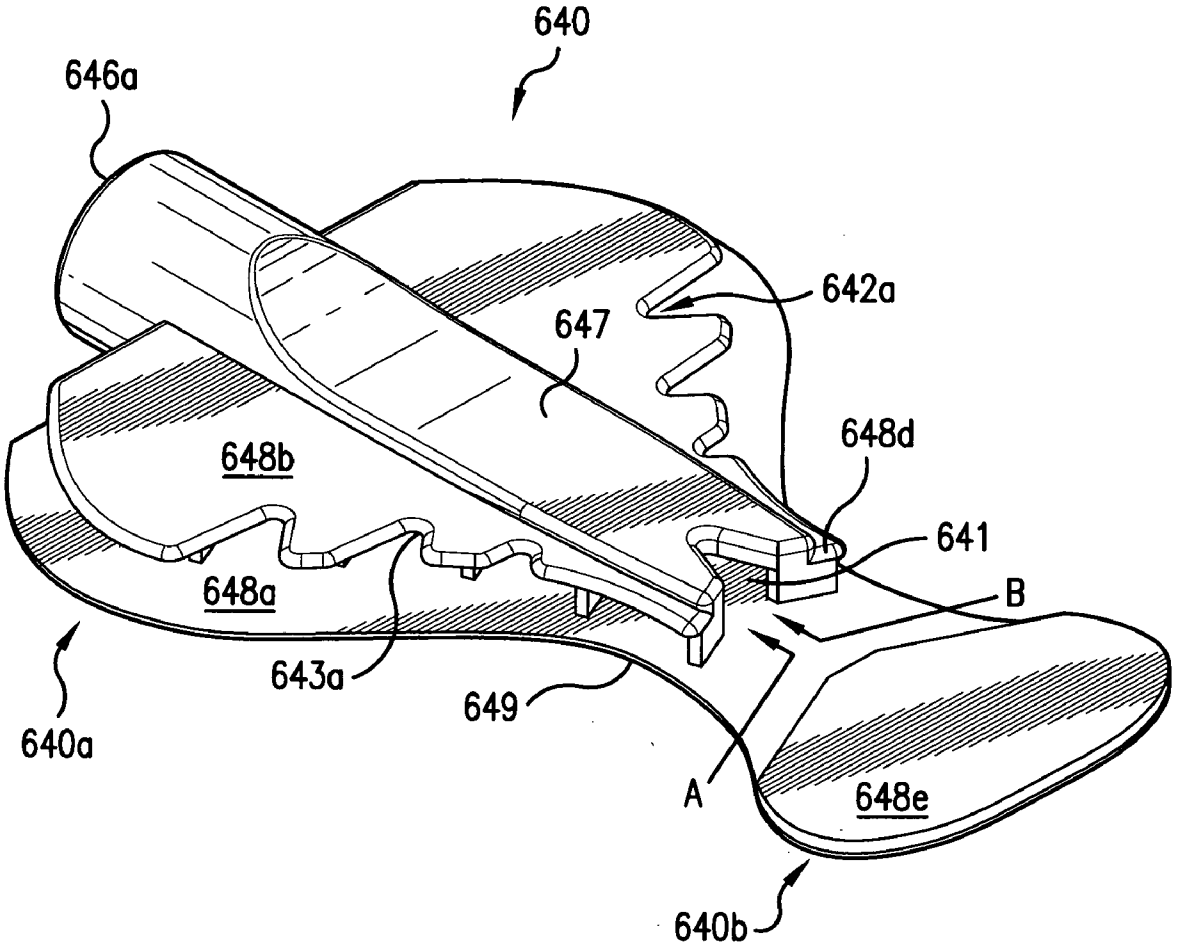
640
646a
642a
647
648d
648b
641
B
648a
643a
649
640a
A
648e
640b

FIG.26A

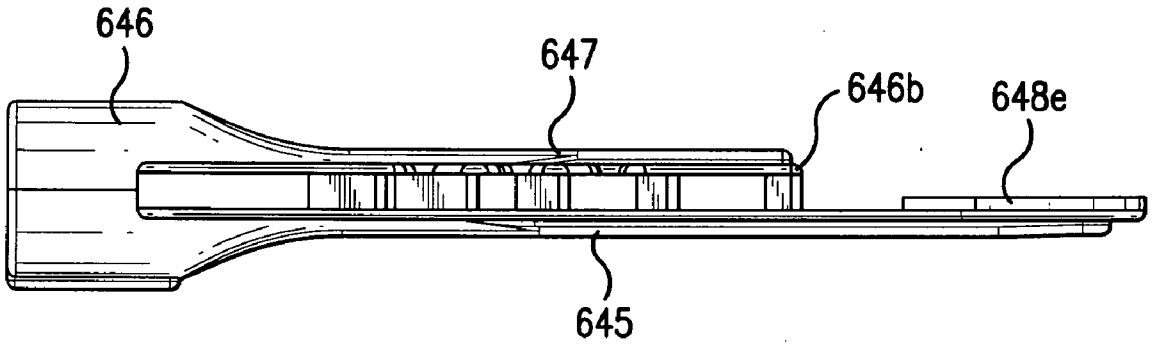

FIG.26B

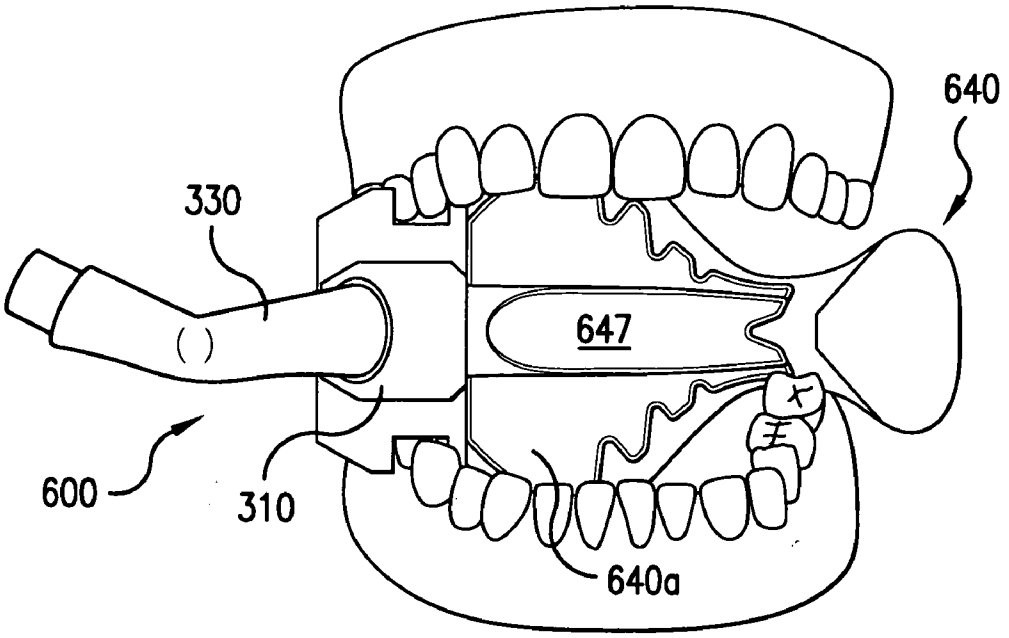

FIG.27A

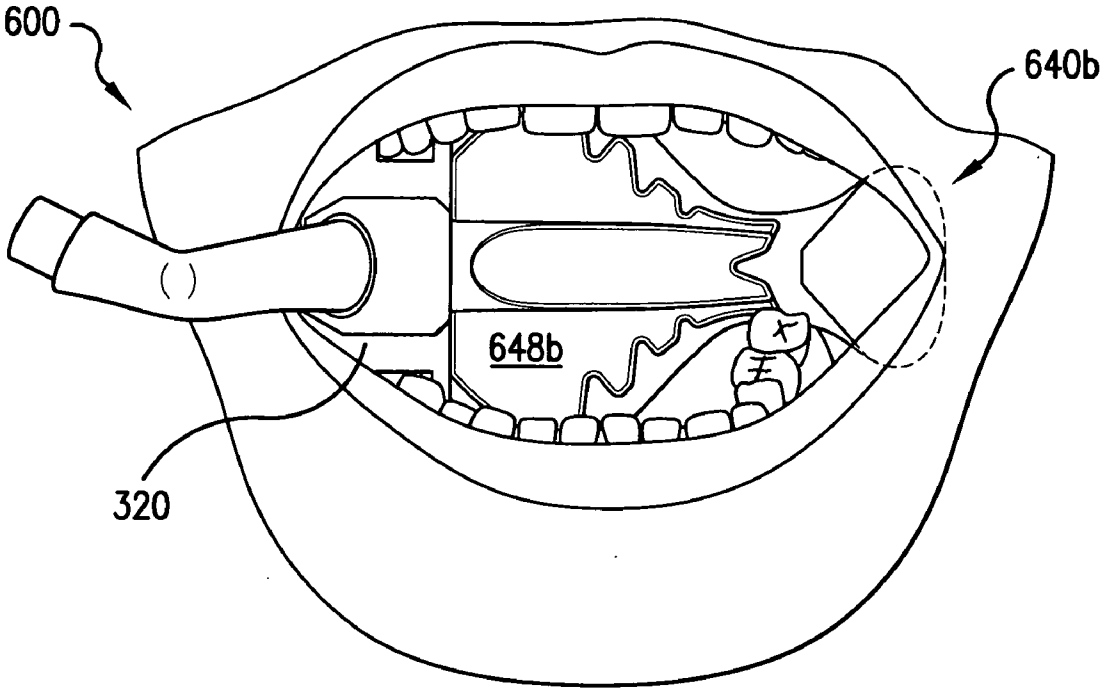

FIG.27B

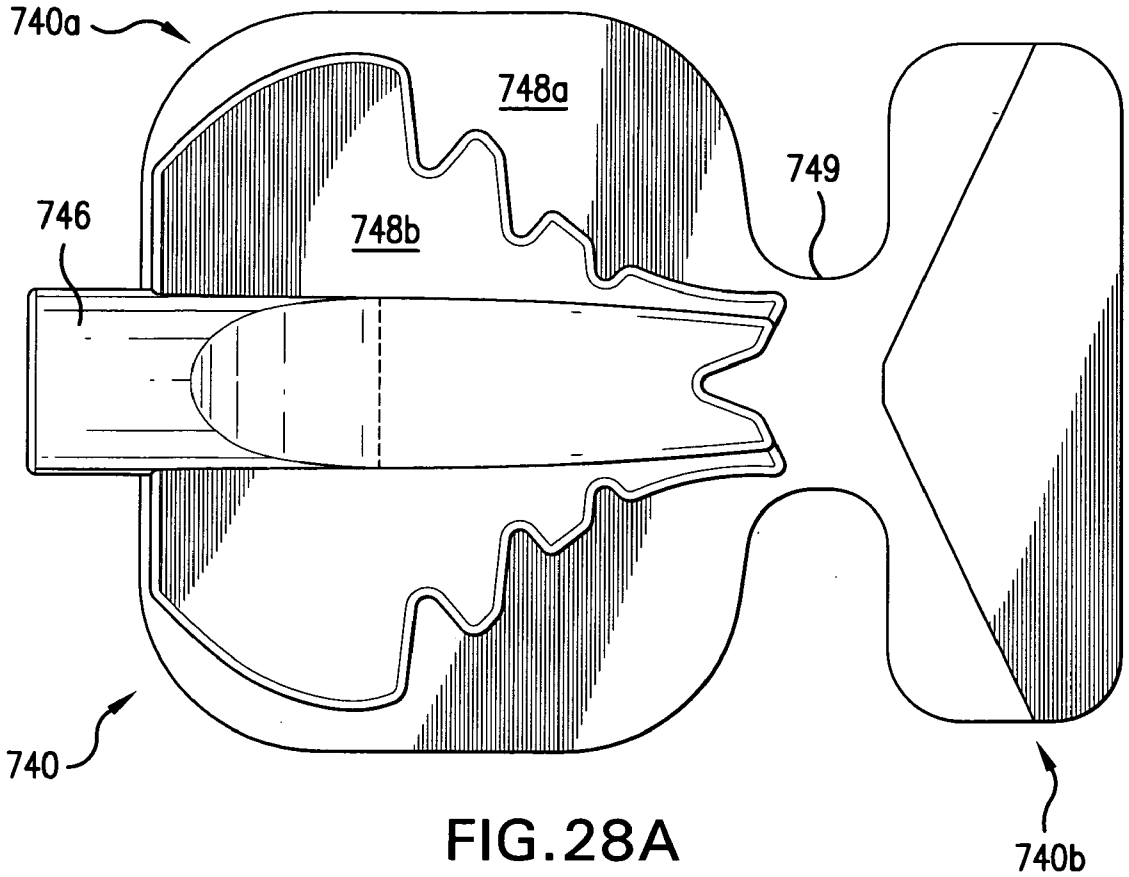

FIG.28A

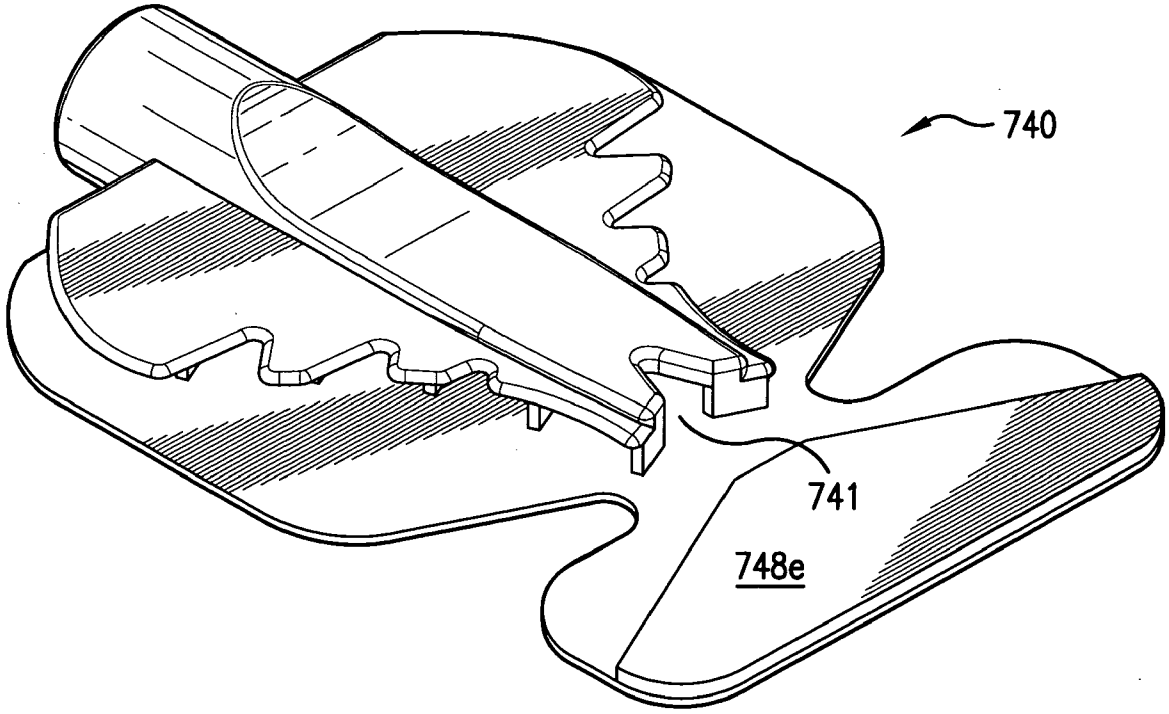

FIG.28B

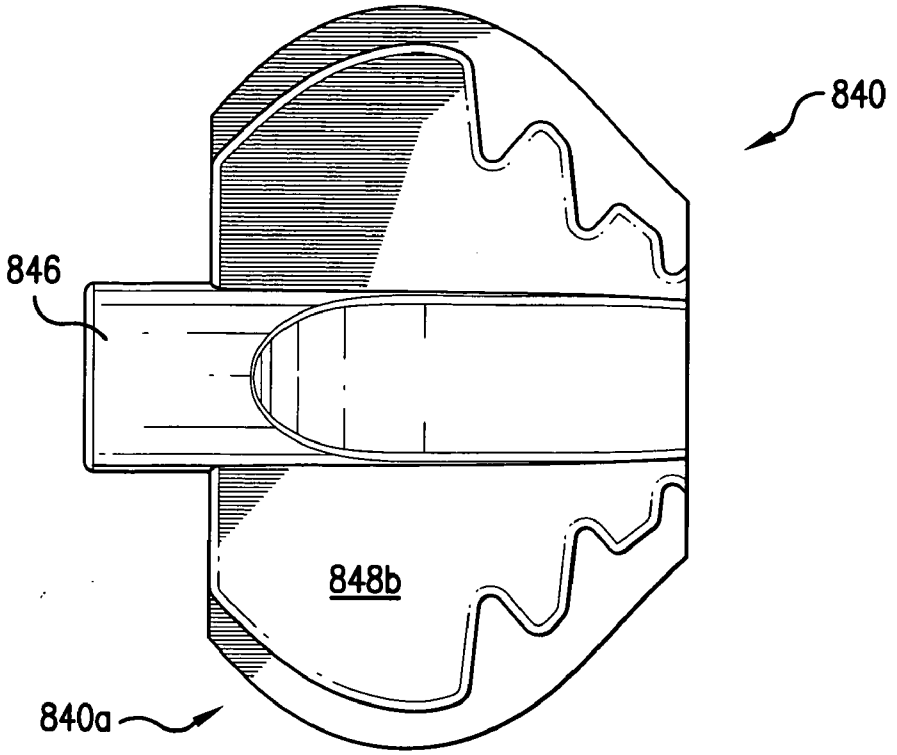

FIG.29A

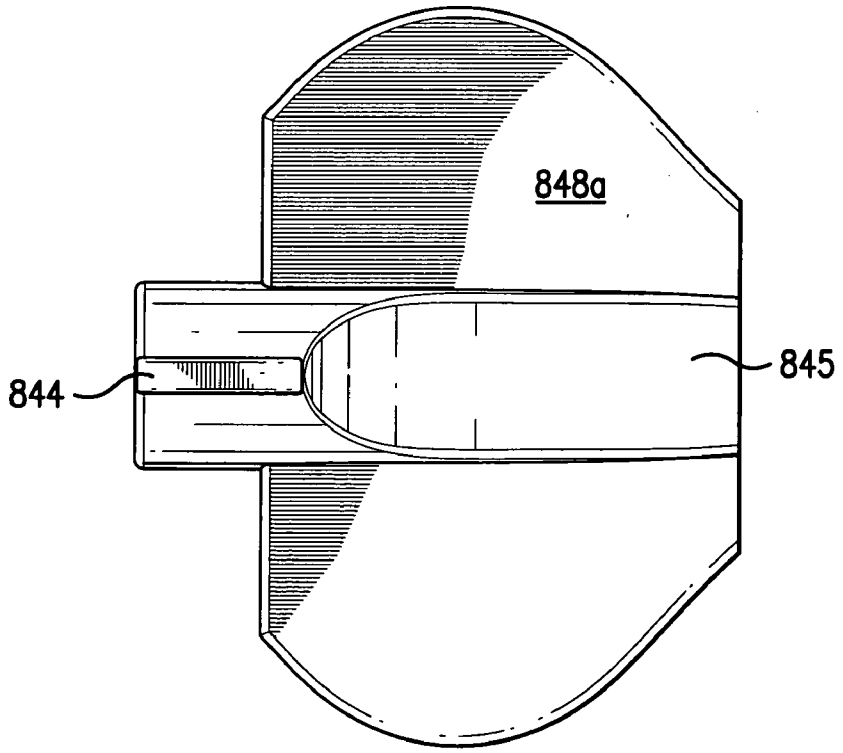

FIG.29B

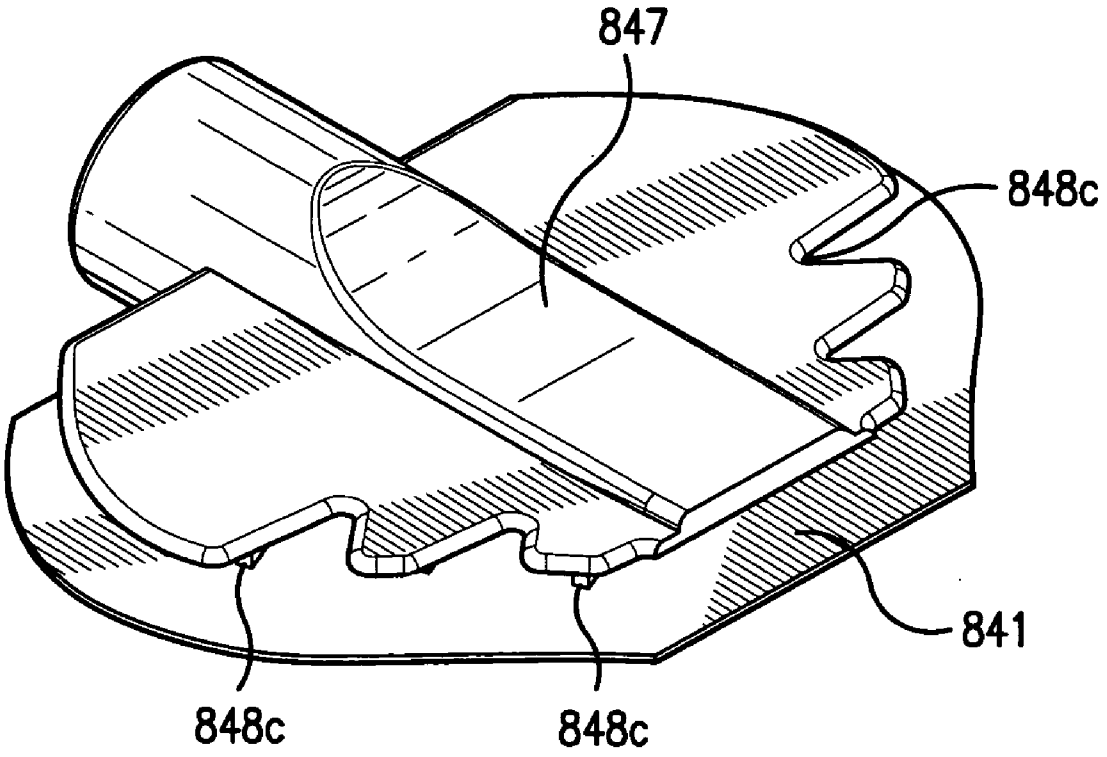

FIG.29C

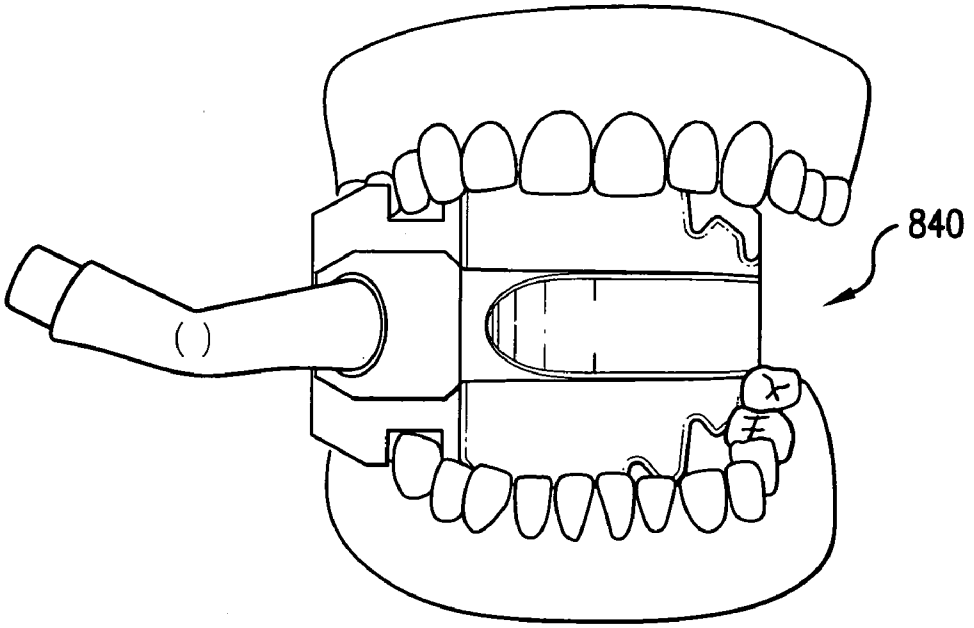

FIG.30A

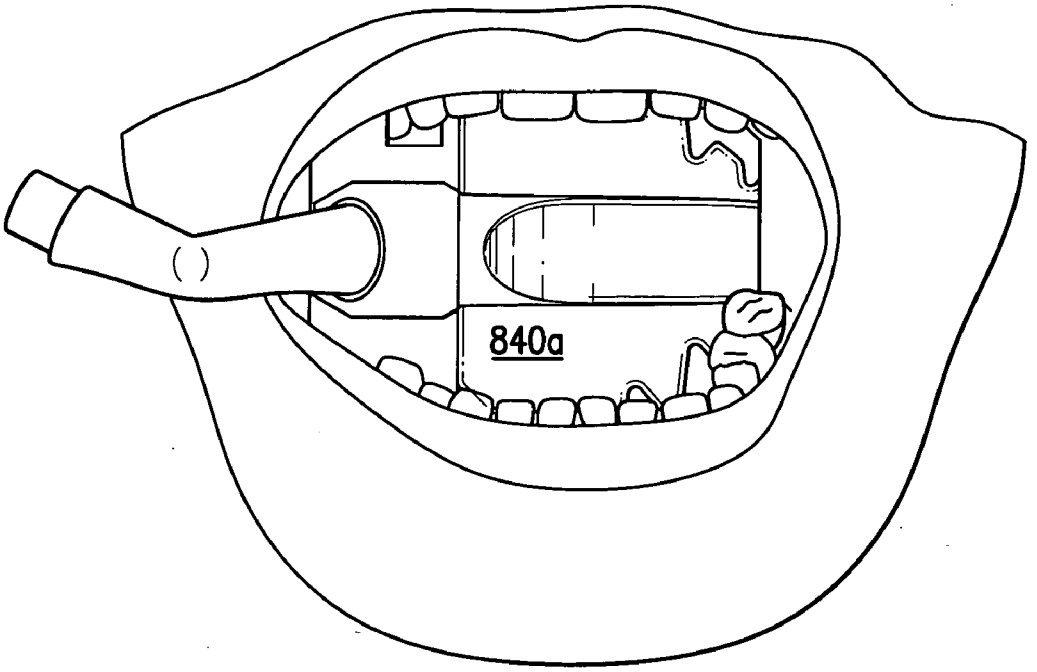

FIG.30B

INTRA-ORAL DEVICE AND METHOD

RELATED APPLICATION DATA

[0001] This application claims priority from Provisional Application Ser. No. 61/126,294, filed May 2, 2008, which is incorporated herein by reference in its entirety.

FIELD OF THE INVENTION

[0002] Aspects of embodiments of the present invention relate generally to dental devices and methods and, more specifically, to devices and methods for providing intra-oral operative isolation, fluid and debris aspiration, and tongue and cheek retraction.

BACKGROUND OF INVENTION

[0003] During dental and similar or related procedures, the patient's oral cavity is continually being filled with debris and fluids, including saliva and water sprayed into the mouth. Moreover, depending on the specific location of treatment, the patient's tongue and/or cheek are typically in the operator's way. To address these issues, separate tongue retractors, cheek retractors, and fluid-aspiration devices have been introduced that generally function as separate and discrete devices. As such, the dentist will usually need the help of an assistant in order to benefit from the advantages offered by such multiplicity of independent devices.

[0004] In order to address this issue, multi-unit devices have been introduced that combine two or more of the above-mentioned functionalities. Nevertheless, some of these devices have proven to be too cumbersome, as they require, e.g., special attachment units and tools for connecting the device to a vacuum unit. As a result, they are also quite expensive to manufacture and purchase. In addition, some devices are very complex, as they require, for example, both high-volume and low-volume suctioning capabilities, or an additional electrical connection. The latter creates not only a bulkier device, but also safety-related issues that must be dealt with.

SUMMARY OF THE INVENTION

[0005] Embodiments of the invention are directed to an intra-oral device comprising an open tongue shield aspirator including a first layer having a posterior side, an anterior side, a proximal edge, a distal edge, a bottom edge, and a top edge, a second layer having a posterior side, an anterior side, a proximal edge, a distal edge, a bottom edge, and a top edge, wherein the proximal edges of the first and second layers are substantially flush with each other, and the posterior side of the second layer is connected to the anterior side of the first layer by a plurality of walls such that the first and second layers are spaced apart from one another and define therebetween an axial passageway, with the passageway having a distal end that coincides with the second layer's distal edge and is configured to be directly exposed to a patient's oral cavity, and a hollow neck extending proximally from the proximal edges of the first and second layers and in fluid communication with the passageway, wherein the neck's proximal end constitutes the passageway's proximal end.

[0006] The intra-oral device may include an evacuation tube having a first end, and a second end that is configured to be coupled directly to a high-volume evacuation (HVE) valve, and a bite member that is configured to be disposed between the patient's upper and lower teeth. The bite member may include a conduit such that, at a distal end of the conduit, the bite member is configured to detachably mate with the neck of the tongue shield aspirator and, at a proximal end of the conduit, the bite member is configured to detachably mate with the first end of the evacuation tube, thereby providing fluid communication between the HVE valve and the patient's oral cavity via the evacuation tube, conduit, and passageway.

[0007] Embodiments of the invention are also directed to an intra-oral device comprising a unitary tongue shield aspirator including a first layer comprising a proximal flap that is configured to retract a patient's tongue, a second layer spaced apart from the first layer by a plurality of walls so as to define an axial passageway between the layers, with the passageway being in direct communication with the patient's oral cavity, and the plurality of walls forming at least one upper channel extending at an angle from the passageway to a top edge of the second layer and at least one lower channel extending at an angle from the passageway to the bottom edge of the second layer so as to provide fluid communication between the passageway and the patient's oral cavity, and a hollow neck extending proximally from the first and second layers and in fluid communication with the passageway.

[0008] The intra-oral device may include an evacuation tube that is configured to be coupled directly to a high-volume evacuation valve, a bite member having an oblique conduit such that, at its distal end, the conduit is configured to detachably receive the neck of the tongue shield aspirator and, at its proximal end, the conduit is configured to detachably receive an end of the evacuation tube. In embodiments of the invention, a bite grip may be included, wherein the bite grip has an upper member configured to fit over a top side of the bite member and engageable by the patient's upper teeth and a lower member configured to fit over a bottom side of the bite member and engageable by the patient's lower teeth.

[0009] Additional aspects and features of embodiments of the invention are described below and/or shown in the accompanying diagrams.

BRIEF DESCRIPTION OF THE DRAWINGS

[0010] FIG. **1** is an assembled intra-oral device in accordance with an embodiment of the invention.

[0011] FIG. **2** is an exploded view of components of an intra-oral device in accordance with an embodiment of the invention.

[0012] FIG. **3**A is an exploded, perspective view of a bite member and a tongue shield aspirator in accordance with an embodiment of the invention.

[0013] FIG. **3**B is an exploded, anterior view of the bite member and a tongue shield aspirator shown in FIG. **3**A.

[0014] FIG. **3**C is a lateral view of the bite member and tongue shield aspirator shown in FIG. **3**A.

[0015] FIG. **4**A is a posterior view of a tongue shield aspirator in accordance with an embodiment of the invention.

[0016] FIG. **4**B is a top view of the tongue shield aspirator shown in FIG. **4**A.

[0017] FIG. **4**C is an anterior view of the tongue shield aspirator shown in FIG. **4**A.

[0018] FIG. **5**A is an exploded, perspective view of a bite member and a tongue shield aspirator in accordance with an alternative embodiment of the invention.

[0019] FIG. **5**B is an exploded, anterior view of the bite member and tongue shield aspirator shown in FIG. **5**A.

[0020] FIG. **5**C is a lateral view of the bite member and tongue shield aspirator shown in FIG. **5**A.

[0021] FIG. **6**A is an exploded, perspective view of a bite member and tongue shield aspirator in accordance with an alternative embodiment of the invention.

[0022] FIG. **6**B is an anterior view of the bite member and tongue shield aspirator shown in FIG. **6**A.

[0023] FIG. **6**C is a lateral view of the bite member and tongue shield aspirator shown in FIG. **6**A.

[0024] FIG. **7**A is an exploded, perspective view of a bite member and tongue shield aspirator in accordance with an alternative embodiment of the invention.

[0025] FIG. **7**B is an anterior view of the bite member and tongue shield aspirator shown in FIG. **7**A.

[0026] FIG. **7**C is a lateral view of the bite member and tongue shield aspirator shown in FIG. **7**A.

[0027] FIG. **8** is a perspective view of a bite member in accordance with an embodiment of the invention.

[0028] FIG. **9** is a perspective view of a bite grip in accordance with an embodiment of the invention.

[0029] FIG. **10** is a perspective view of an evacuation tube in accordance with an embodiment of the invention.

[0030] FIG. **11** is a top view of an assembled intra-oral device in accordance with an alternative embodiment of the invention.

[0031] FIG. **12** is a perspective view of the intra-oral device shown in FIG. **11**.

[0032] FIG. **13** is an anterior view of the intra-oral device shown in FIG. **11**.

[0033] FIG. **14** is a posterior view of the intra-oral device shown in FIG. **11**.

[0034] FIG. **15**A is a perspective view of a bite member in accordance with an alternative embodiment of the invention.

[0035] FIG. **15**B is a side view of the bite member shown in FIG. **15**A.

[0036] FIG. **15**C is a view from an opposite side of the bite member shown in FIG. **15**B.

[0037] FIG. **16**A is a top plan view of an opened bite grip in accordance with an alternative embodiment of the invention.

[0038] FIG. **16**B is a bottom plan view of the bite grip shown in FIG. **16**A.

[0039] FIG. **17**A is a perspective view of an evacuation tube in accordance with an alternative embodiment of the invention.

[0040] FIG. **17**B is a side elevational view of the evacuation tube shown in FIG. **17**A.

[0041] FIG. **17**C is an end view of the evacuation tube shown in FIG. **17**A.

[0042] FIG. **18** is an anterior view of an assembled intra-oral device in accordance with an embodiment of the invention.

[0043] FIG. **19** is an exploded view of components of the intra-oral device shown in FIG. **18**.

[0044] FIG. **20**A is a top perspective view of a bite member in accordance with an embodiment of the invention.

[0045] FIG. **20**B is bottom perspective view of the bite member shown in FIG. **20**A.

[0046] FIG. **20**C is a posterior view of the bite member shown in FIG. **20**A.

[0047] FIG. **20**D is a distal side view of the bite member shown in FIG. **20**A.

[0048] FIG. **20**E is a proximal side view of the bite member shown in FIG. **20**A.

[0049] FIG. **21**A is a top perspective view of a bite grip in accordance with an embodiment of the invention.

[0050] FIG. **21**B is a bottom plan view of the bite grip shown in FIG. **21**A.

[0051] FIG. **22**A is a side elevational view of an evacuation tube in accordance with an embodiment of the invention.

[0052] FIG. **22**B is an end view of the evacuation tube shown in FIG. **22**A.

[0053] FIG. **23**A is an anterior view of a tongue shield aspirator in accordance with an embodiment of the invention.

[0054] FIG. **23**B is a posterior view of the tongue shield aspirator shown in FIG. **23**A.

[0055] FIG. **23**C is a top side view of the tongue shield aspirator shown in FIG. **23**A.

[0056] FIG. **24**A is an anterior view of a tongue shield aspirator in accordance with another embodiment of the invention.

[0057] FIG. **24**B is a posterior view of the tongue shield aspirator shown in FIG. **24**A.

[0058] FIG. **24**C is a bottom side view of the tongue shield aspirator shown in FIG. **24**A.

[0059] FIG. **24**D is a back-end view of the tongue shield aspirator shown in FIG. **24**A.

[0060] FIG. **25**A is an anterior view of a tongue shield aspirator in accordance with another embodiment of the invention.

[0061] FIG. **25**B is a posterior view of the tongue shield aspirator shown in FIG. **25**A.

[0062] FIG. **25**C is a back-end view of the tongue shield aspirator shown in FIG. **25**A.

[0063] FIG. **25**D is a bottom side view of the tongue shield aspirator shown in FIG. **25**A.

[0064] FIG. **25**E is a perspective view of an assembled intra-oral device in accordance with an embodiment of the invention.

[0065] FIG. **26**A is a perspective view of a tongue shield aspirator in accordance with another embodiment of the invention.

[0066] FIG. **26**B is a bottom side view of the tongue shield aspirator shown in FIG. **26**A.

[0067] FIG. **27**A is an anterior view of an intra-oral device held between a patient's upper and lower teeth.

[0068] FIG. **27**B shows the intra-oral device of FIG. **27**A inside the patient's mouth, with the patient's cheek retracted.

[0069] FIG. **28**A is an anterior view of a tongue shield aspirator in accordance with another embodiment of the invention.

[0070] FIG. **28**B is a top perspective view of the tongue shield aspirator shown in FIG. **28**A.

[0071] FIG. **29**A is an anterior view of a tongue shield aspirator in accordance with another embodiment of the invention.

[0072] FIG. **29**B is a posterior view of the tongue shield aspirator shown in FIG. **29**A.

[0073] FIG. **29**C is top perspective view of the tongue shield aspirator shown in FIG. **29**A.

[0074] FIG. **30**A is an anterior view of an intra-oral device held between a patient's upper and lower teeth.

[0075] FIG. **30**B shows the intra-oral device of FIG. **30**A inside the patient's mouth.

DETAILED DESCRIPTION

[0076] As described in more detail hereinbelow, embodiments of the present invention are directed to intra-oral

devices used to aid dentists, hygienists, oral surgeons, other dental professionals, etc. (hereinafter referred to as "operator") in isolating the operative field, aspirating fluids and debris while working in the mouth, and maintaining patient comfort by holding the mouth open and protecting the tongue and cheek, thereby providing simultaneous intra-oral operative isolation, fluid and debris aspiration, and tongue and cheek retraction.

[0077] FIG. **1** shows an assembled intra-oral device **1**, and FIG. **2** shows an exploded view of components of a device **100**, in accordance with embodiments of the present invention. As shown in FIGS. **1** and **2**, embodiments of an intra-oral device may include four main components: a bite member **10**, a bite grip **20**, an evacuation tube **30**, and a tongue shield aspirator **40**, **140**.

[0078] FIGS. **1-7**, e.g., show various tongue shield aspirators in accordance with embodiments of the present invention. It is noted that any one or more of the tongue shield aspirators described in the ensuing discussion may be disposable. Moreover, any one or more of the tongue shield aspirators may be made of non-latex and/or non-silicone material, and may be adapted for manufacture in a range of sizes, including adult and pediatric sizes.

[0079] As shown in FIGS. **3**A-**3**C, a posterior tongue shield aspirator **40** has a first (proximal) flap **40***a*, which is configured to retract a patient's tongue, and a second (distal) flap **40***b*, which is configured to retract a patient's cheek. The first and second flaps are joined to one another at a transition section **49** such that, when viewed from the perspectives shown in FIGS. **3**A and **3**B, the transition section **49** forms the narrowest section of the tongue shield aspirator **40**, thereby forming an isthmus between the flaps **40***a*, **40***b*. It is noted that, although the flaps **40***a*, **40***b* are described herein as being "joined" at the transition section **49**, this is simply for ease of reference. In practice, any of the tongue shield aspirators described herein in accordance with the various embodiments of the invention (e.g., the tongue shield aspirator **40**) may be manufactured as a one-piece, or unitary, component, or the two flaps **40***a*, **40***b* may be manufactured separately, and then coupled to one another at the transition section **49**.

[0080] The tongue shield aspirator **40** includes a longitudinal hollow lumen **41** that is in fluid communication with a multiplicity of branches, or channels, that may extend at an angle therefrom. More specifically, the proximal flap **40***a* and/or the distal flap **40***b* of the tongue shield aspirator **40** may be formed from a first (posterior) layer **48***a* and a second (anterior) layer **48***b* which are connected to, but spaced apart from, one another by transverse walls **48***c*. As shown, e.g., in FIG. **3**B, each set of two consecutive walls **48***c* that are disposed above the longitudinal lumen **41** forms an upper channel **42** which extends from the longitudinal lumen **41** towards the top edge **40***c* of the proximal flap **40***a*. Similarly, each set of two consecutive walls **48***c* that are disposed below the longitudinal hollow lumen **41** forms a lower channel **43** which extends from the longitudinal lumen **41** towards the bottom edge **40***d* of the proximal flap **40***a*. With this construction, the longitudinal hollow lumen **41** itself is formed as a passageway having intermittent boundary sections that are defined by the ends of the transverse walls **48***c* that are closest to the longitudinal lumen **41**. In this way, the channels **42**, **43** provide a plurality of conduits for debris and fluid evacuation, thereby allowing for simultaneous aspiration of debris and fluid from top (palate of mouth) to bottom (floor of mouth), and through the longitudinal lumen **41**, during dental procedures.

[0081] It is noted that, while, in the embodiment of FIGS. **3**A-**3**C, the tongue shield aspirator **40** includes a plurality of upper channels and a plurality of lower channels, this is by way of illustration only. Thus, a tongue shield aspirator in accordance with embodiments of the invention may include one or more of each of the upper channel(s) **42** and lower channel(s) **43**. In addition, the layers **48***a*, **48***b* and the transverse walls **48***c* may be made of flexible material so as to enable proper placement of the tongue shield aspirator in the patient's mouth. Thus, each of the walls **48***c* is "transverse" in that it is generally perpendicular to the inner surfaces of the first and second layers **48***a*, **48***b* when the tongue shield aspirator is laid flat, but flexes along with the first and second layers **48***a*, **48***b* when the tongue shield aspirator itself is flexed, e.g., for placement in the patient's mouth.

[0082] A tongue shield aspirator having the above-described construction may be considered an "open" tongue shield in the sense that the upper and lower edges of the tongue shield are open to, or in communication with, the patient's oral cavity. Thus, with reference to FIGS. **3**A-**3**C, for example, each upper channel **42** extends to and through the top edge **40***c* of the proximal flap **40***a*, wherein the proximal flap may be formed by the proximal portions of the posterior layer **48***a* and the anterior layer **48***b*, and the top edge **40***c* of the proximal flap may be formed by the respective top edges of the posterior layer **48***a* and the anterior layer **48***b*. Similarly, each lower channel **43** extends to and through the bottom edge **40***d* of the proximal flap **40***a*, wherein the bottom edge **40***d* is formed by the respective bottom edges of the posterior layer **48***a* and the anterior layer **48***b*. In this way, each of the top edge **40***c* and the bottom edge **40***d* of the proximal flap **40***a* is open along the entirety of the length thereof.

[0083] In embodiments of the invention, the upper opening defined by the space between the top edges of the anterior and posterior layers, and the lower opening defined by the space between the bottom edges of the anterior and posterior layers may extend through an additional portion of the tongue shield aspirator. Thus, a tongue shield aspirator in accordance with embodiments of the invention may be open through a portion or all of (the top and bottom edges of) the transition section between the proximal and distal flaps. Alternatively, the tongue shield aspirator may be open through a portion or all of (the top and bottom edges of) the distal flap.

[0084] As described above in connection with the proximal flap **40***a*, in embodiments of the invention, the distal flap **40***b* may be formed by the distal portions of the posterior layer **48***a* and the anterior layer **48***b*. In alternative embodiments, however, one or both of the proximal and distal flaps may be formed by the respective portion of the posterior layer only. In some such embodiments, the anterior layer may exclude some or all of the proximal and/or distal portions thereof.

[0085] Returning to FIG. **3**, the tongue shield aspirator **40** includes a neck **46** having a transverse anterior opening **47**. In the embodiments shown in FIGS. **2** and **3**, the longitudinal hollow lumen (or passageway) **41** extends from the transition section **49** through the neck **46** and to the anterior opening **47**. As will be discussed hereinbelow, when assembled, the neck **46** is received within a lateral orifice of a bite member (such as, e.g., orifice **12** of bite member **10**), such that the anterior opening **47** is aligned with an opening in an anterior face of

the bite member. It is noted that, in the embodiment shown in FIGS. **3**A-**3**C, the transition section may represent a closed end of the passageway. However, in embodiments of the invention, the longitudinal lumen **41** and the channels **42**, **43** may extend through not only the first flap **40***a*, but also at least a portion of the second flap **40***b*.

[0086] In embodiments of the invention, one or both of the flaps **40***a*, **40***b* may include an internal wire mesh **44**, thereby allowing the operator to mold the tongue shield aspirator **40** as needed for appropriate fit in the patient's mouth. In addition, as shown in FIGS. **2** and **3**, one or more of the flaps **40***a*, **40***b* may include finger-like projections **45** on the bottom and/or top edge thereof, thereby creating a "one-size-fits-all" feature and providing a comfortable form-fitting seal within the patient's mouth.

[0087] FIGS. **4**A-**4**C show an alternative embodiment of the posterior tongue shield aspirator **240** having a first flap **240***a*, a second flap **240***b*, channels **242**, **243** extending from a longitudinal lumen **241**, and a neck **246** defining a transverse anterior opening **247** therethrough. These, as well as many other features of the tongue shield aspirator **240** resemble those of the tongue shield aspirator **40** discussed immediately above. However, in contrast with the latter, the tongue shield aspirator **240** may include finger-like projections **245** on only the first flap **240***a*. In addition, the longitudinal hollow lumen **241** of the tongue shield aspirator **240** extends from the anterior opening **247** to an outer edge **240***e* of the second flap **240***b*. Depending on the specific application, such a configuration may offer various advantages over the construction of the tongue shield aspirator **40** shown, e.g., in FIG. **3**. In addition, the inclusion of a longitudinal lumen that extends through both flaps **240***a*, **240***b* allows for a simpler, more optimized manufacturing process.

[0088] In certain applications, aspiration from the distal side of the second flap **240***b* (i.e., the side that includes the edge **240***e*) may be either unnecessary and/or undesirable, as it may lead to loss of pressure (i.e., lower suctioning capability) through the channels **242**, **243**. For these applications, a compressible valve **248** may be included on the posterior side of the second flap **240***b*. Thus, when the tongue shield aspirator **240** is placed in a patient's mouth, with the second flap **240***b* retracting the patient's cheek, the force that is applied between the patient's cheek and the posterior side of the second flap **240***b* is sufficient to close the valve **248**, thereby closing off an end of the longitudinal lumen **241**.

[0089] It is important to note that, for ease of manufacturing, the tongue shield aspirator **240** may be manufactured as a "flat" piece, i.e., as shown in FIG. **4**. However, such depiction in connection with this, or any other embodiments of the tongue shield aspirator discussed herein is by way of illustration, and not limitation. Moreover, regardless of whether any given tongue shield aspirator is manufactured as a flat or arcuate component, the tongue shield aspirator may be made of material that has position memory. In this way, in order to place the component into the patient's mouth, the two flaps (e.g., **40***a* and **40***b*, or **240***a* and **240***b*) are first brought towards one another. This results in a generally C-shaped tongue shield aspirator that is then inserted into the patient's mouth as discussed in more detail hereinbelow. Once inserted, the operator releases the force that was previously applied to the two flaps, at which point the first flap expands outwards (i.e., towards a 180° angle) to retract the patient's tongue, and the second flap expands outwards to retract the patient's cheek. It is noted that, in some embodiments, e.g., those in which the tongue shield aspirator is not, and/or is not manufactured as, a unitary component, only certain portions of the component, such as, e.g., the transition section between the first and second flaps may be made of material having position memory to provide the above-described functionality.

[0090] As noted, the primary function of the tongue shield aspirator is to aspirate from top (palate of mouth) to bottom (floor of mouth) simultaneously during dental procedures while, at the same time, retracting or shielding the tongue and cheek from the operator's instruments, aspirating fluids/debris from the operating site, and preventing fluid/debris aspiration by the patient during dental procedures. To this end, embodiments of the tongue shield aspirator may take on various shapes and configurations in order to accommodate different dental procedural needs.

[0091] FIGS. **5**A-**5**C show one alternative embodiment, in which an anterior tongue shield aspirator **50** has a single longitudinal hollow channel **53**. In practice, this component may be used to aspirate from the posterior surfaces of upper (maxillary) and lower (mandibular) anterior teeth simultaneously while retracting or shielding the tongue from the operator's instruments, aspirating fluids/debris from the operating site, and preventing fluid/debris aspiration by the patient during dental procedures.

[0092] As shown in FIG. **5**C, the tongue shield aspirator **50** has a generally cup-shaped, or trumpet-shaped, configuration when viewed laterally. In addition, when viewed anteriorly, the tongue shield **50** has a regularly-undulating periphery that may be described by a plurality of lobes **52** defining the anterior face **51** thereof. As before, this component has a neck **54** which, in this embodiment, extends posteriorly from a posterior face of the tongue shield, and then bends **55** at about a 90° angle, extending toward one side of the mouth.

[0093] The neck **54** defines a transverse anterior opening **56** therethrough. Thus, the longitudinal hollow channel **51** extends from an opening **59** in the anterior face **51**, through the neck **54**, and to the opening **56**. When assembled, the neck **54** is received within a lateral orifice of a bite member (such as, e.g., orifice **12** of bite member **10**), such that the anterior opening **56** is aligned with an opening in an anterior face of the bite member. This allows the tongue shield aspirator **50** to aspirate lingual or posterior surfaces of anterior teeth during tooth preparation. More specifically, the cup-shaped surface is configured to capture aerosol and debris as the operator prepares the teeth anterior to the tongue shield. Although this component may be adapted for manufacture in a variety of sizes, it also includes a "one-size-fits-all" feature in that its periphery can be trimmed for a more precise fit in the patient's mouth.

[0094] FIGS. **6**A-**6**C show a generally paddle-shaped surgeon's tongue shield aspirator **60**, which is configured such that, in use, an anterior edge **62** thereof is oriented anteriorly, and a bottom edge **69** thereof is positioned proximate the floor of the mouth. The tongue shield aspirator **60** has a longitudinal hollow lumen **61** that is in fluid communication with a multiplicity of branches, or channels, that extend at an angle therefrom. As shown in FIG. **6**C, one set of branches **67** extends from the longitudinal lumen **61** to the anterior edge **62** of the tongue shield, and another set of branches **68** extends from the longitudinal lumen **61** to the posterior edge **63** of the tongue shield. In addition, the longitudinal lumen **61** itself extends to and through the bottom edge **69**.

[0095] In this way, the longitudinal lumen **61** and the channels **67**, **68** provide a plurality of conduits for debris and fluid

evacuation, thereby allowing for simultaneous aspiration of fluids/debris from the operating site from side to side and the floor of the mouth during dental procedures and oral surgery (e.g., tooth extractions). At the same time, the tongue shield aspirator **60** retracts and/or shields the lateral surface of the tongue from the operator's instruments while, at the same time, preventing fluid/debris aspiration by the patient during dental procedures.

[0096] The tongue shield aspirator **60** includes a neck **65** having a transverse anterior opening **66**. As noted, in this embodiment, the longitudinal hollow lumen **61** extends from the bottom edge **69** through the neck **65** and to the anterior opening **66**. When assembled, the neck **65** is received within a lateral orifice of a bite member (such as, e.g., orifice **12** of bite member **10**), such that the anterior opening **66** is aligned with an opening in an anterior face of the bite member.

[0097] In embodiments of the invention, the tongue shield aspirator **60** may include an internal wire mesh **64**, thereby allowing the operator to mold the tongue shield aspirator as needed for appropriate fit in the patient's mouth. Although this component may be adapted for manufacture in a variety of sizes, it does nevertheless include a "one-size-fits-all" feature, whereby the tongue shield may be trimmed to shorten its length or depth of placement into the floor of the mouth. This component may be disposable and may be made of material other than latex or silicone.

[0098] In yet another alternative embodiment, FIGS. **7**A-**7**C show a general anesthesia (GA) tongue shield aspirator **70**. The GA tongue shield aspirator **70** includes a cup **71** that may be a disposable component and may be made of material other than latex or silicone. The cup **71** is joined to a conduit **72** which extends substantially anteriorly from the cup **71**, and then bends **73**, at about a 90° angle, into a neck **74**. In one embodiment, the conduit **72** may be made of bendable and/or moldable material, such as, e.g., plastic, and may include ribs **76** that allow the length of the conduit to be expanded or contracted as needed, thereby providing a "one-size-fits-all" feature. Again, the GA tongue shield aspirator **70** may be adapted for manufacture in a variety of sizes. It is also important to note that, while the conduit **72** may be manufactured as a separate component and then joined, or coupled, to the cup **71**, this is by no means a requirement of the invention. Thus, for example, the cup **71** and conduit **72** may be manufactured as a unitary or integrated component.

[0099] The conduit **72** defines therethrough a longitudinal lumen that extends from an opening **75** in the cup **71** to a transverse anterior opening **77**. Thus, when assembled, the neck **74** is received within a lateral orifice of a bite member (such as, e.g., orifice **12** of bite member **10**), such that the anterior opening **77** is aligned with an opening in an anterior face of the bite member. In this way, in use, the GA tongue shield aspirator **70** may be configured to hold surgical gauze arranged as a "throat pack" and trap debris while aspirating fluid/debris. In addition, given that, during dental procedures in which the patient is placed under general anesthesia, the patient's normal responses to fluid/debris in the throat area are suppressed, the GA tongue shield aspirator is also configured to prevent fluid/debris aspiration by the patient.

[0100] As noted previously, the tongue shield aspirator (e.g., any one of the tongue shield aspirators **40**, **50**, **60**, **70**, **140**, **240**, or those described hereinafter) may be used in an intra-oral device in conjunction with a bite member, a bite grip, and an evacuation tube, any one or more of which may be made of disposable material (e.g., plastic). As will be evident from the ensuing discussion, the bite member is generally configured to hold the upper and lower jaws separate during dental procedures and/or similar procedures that require intubation. As such, this component is fully symmetrical and capable of bilateral use in the mouth. In addition, the bite member may be used independently of a tongue shield aspirator or an evacuation tube.

[0101] In general, the bite member may be made of metallic material, and may be adapted for manufacture in a variety of sizes, including adult and pediatric sizes. Alternatively, the bite member may be made of other materials. In embodiments of the invention, the bite member may preferably be made of an autoclavable material, including an autoclavable resin, such as, e.g., an amorphous thermoplastic polyetherimide (PEI) available under the name ULTEM®. Generally, the bite member may be made of material, and in such a way, that when coupled to a bite grip, allows the combination to be soft and compressible between the upper and lower teeth in an elastic manner, thereby providing a spring-like quality. In embodiments, therefore, the bite member may be referred to as the bite spring.

[0102] As shown, e.g., in FIG. **8**, in embodiments of the invention, a bite member **10** may be a re-usable (autoclavable) component having an upper member **14** and a lower member **16**. The upper and lower members **14**, **16** are connected to an intermediate member **18** via respective connection sections **15**, **17** proximate a posterior end **18***b* of the intermediate member **18**. The intermediate member **18** also includes a lateral orifice **12** which, as discussed above, may accommodate therethrough a variety of tongue shield aspirators to assist the practitioner in a multitude of differing procedures. In addition, the intermediate member **18** defines an anterior opening **19** through the anterior face **18***a* thereof, for accommodating an end of an evacuation tube such as, e.g., evacuation tube **30**, **230** (see below).

[0103] FIG. **9** shows a bite grip **20** in accordance with an embodiment of the present invention. The bite grip **20** may generally be a disposable component that is used to cover the upper member **14** and the lower member **16** of the bite member **10**, thereby cushioning the patient's teeth from the bite member. To this end, the bite grip **20** includes an upper member **24** and a lower member **26** that are joined to one another by a vertical spine **28**. As shown in FIG. **9**, the upper member **24** includes opposing pockets **24***a*, **24***b* which are configured to receive, respectively, mating protrusions **14***a*, **14***b* which project from the upper member **14** of the bite member **10**. Similarly, the lower member **26** includes opposing pockets **26***a*, **26***b*, which are configured to receive, respectively, mating protrusions **16***a* (not shown), **16***b* which project from the lower member **16** of the bite member **10**.

[0104] In embodiments of the invention, the bite grip **20** may also serve as a retention feature for dental impression material if desired to obtain a "custom" fit to the patient's dental anatomy. The bite grip **20** may be made of a non-latex and/or non-silicone material, and is adapted for manufacture in a variety of sizes, including adult and pediatric sizes.

[0105] The purpose of an evacuation tube is to provide fluid communication between the dental chair high-volume vacuum hose and the tongue shield aspirator via the bite grip/bite member combination so as to enable aspiration of fluids and/or debris during dental procedures. Thus, as described more fully below, the evacuation tube extends from within the bite member and out for connection to the industry standard-sized high-volume evacuation (HVE)—and solely

the HVE—valve **99** at the dental auxiliary unit. In embodiments of the invention, the evacuation tube may be made of metallic material. Alternatively, the evacuation tube may be made of other materials. In embodiments of the invention, the evacuation tube may preferably be made of an autoclavable material, including an autoclavable resin, such as, e.g., an amorphous thermoplastic polyetherimide (PEI) available under the name ULTEM®.

[0106] FIG. **10** shows an evacuation tube **30** in accordance with an embodiment of the invention. As noted, the evacuation tube **30** may be a re-usable (autoclavable) component which, in embodiments of the invention, may have a "U"-shaped configuration, so as to form a "U tube". The evacuation tube **30** is affixed (i.e., removably attached) to the anterior face **18***a* of the bite member **10** via a locking mechanism wherein two radial flanges **31**, **33** extend from a first end portion **32** of the evacuation tube **30** and are adapted to rotate within two respective mating sockets **11**, **13** defined within the anterior face **18***a* of the bite member **10**, thereby interlocking the evacuation tube **30** and the bite member **10**. In this way, the evacuation tube **30** is rendered inseparable from the bite spring **10** when pulled in an anterior direction. In addition, when locked, the first end portion **32** of the evacuation tube **30** is in (fluid) communication with the transverse anterior orifice and, therefore, with the longitudinal hollow lumen, of a tongue shield aspirator. When assembled, the connection between the evacuation tube **30** and the transverse anterior orifice of the tongue shield aspirator preferably creates a seal such that no air, fluid, or debris leaks as it travels through the longitudinal hollow lumen and into the evacuation tube.

[0107] With the above construction, the evacuation tube exits the patient's mouth anteriorly rather than laterally, thereby creating greater patient comfort and increased operative area for the operator's hands and instruments. As shown, the evacuation tube includes a first bend **34** and a second bend **36**, such that its second end **38** may then be attached to the HVE valve **99**. See also FIGS. **1** and **2**. As shown in these Figures, the evacuation tube **30**, and indeed, the overall intra-oral device **1**, **100**, may be used bilaterally in the mouth.

[0108] FIGS. **11-14** show an intra-oral device **200** in accordance with an alternative embodiment of the invention. As shown, the device **200** includes the same overall components that were discussed above, namely, a bite member **210**, a bite grip **220**, a tongue shield aspirator **240**, and an evacuation tube **230** that, at one end, is attached to a HVE valve **99**. FIGS. **15-17** provide further details of these components.

[0109] As shown in FIGS. **15**A-**15**C, the bite member **210** includes an upper member **214** and a lower member **216**, wherein the anterior edge **214***c* of the upper member **214** and the anterior edge **216***c* of the lower member **216** are beveled. In addition, as compared with the bite member **10**, wherein the upper member **14** and the lower member **16** are connected to an intermediate member **18** via respective connection sections **15**, **17** proximate a posterior end **18***b* of the intermediate member **18**, in the embodiment shown in FIGS. **15**A-**15**C, the connection sections **215**, **217** extend anteriorly through at least the longitudinal midpoint of the intermediate member **218** so as to fill a portion of the space between the intermediate member **218** and the upper and lower members **214**, **216**. As shown in FIGS. **12**, **15**B, and **15**C, the intermediate member **218** includes a lateral orifice **212** to allow insertion of a tongue shield aspirator into the body of the intermediate member **218**. However, in contrast with the embodiments shown in FIG. **1-8**, the orifice **212** opens on only one side of the intermediate member **218**, and is closed off on the opposite side **212***a*.

[0110] The bite grip **220** shown in FIGS. **16**A and **16**B includes an upper member **224** that is connected to a lower member **226** via a spine **228**; each of the upper and lower members includes respective pockets **224***a*, **224***b* and **226***a*, **226***b* for receiving therein respective protrusions **214***a*, **214***b* and **216***a*, **216***b* on the upper and lower members **214**, **216** of the bite member **210**. In addition, at a respective anterior edge thereof, the upper member **224** includes a lip **224***c*, and the lower member **226** includes a lip **226***c*, wherein the former is configured to fit around the beveled edge **214***c*, and the latter is configured to fit around the beveled edge **216***c*, of the bite member **210**. Moreover, each of the upper member **224** and the lower member **226** includes, on its respective outer surface, shaped regions **229**, which are adapted to serve as "molar" guides for a more secure fit between the patient's upper and lower jaws.

[0111] FIGS. **17**A-**17**C show an evacuation tube **230** having a first end portion **232**, a second end **238**, and two radial flanges **231**, **233** which extend from the first end portion **232** and are adapted to rotate within two respective mating sockets defined within the anterior face **218***a* of the bite member **210**. In this embodiment, the evacuation tube **230** includes a single bend **234**. Nevertheless, given that, when assembled, the first end portion **232** is affixed (i.e., removably attached) to the anterior face **218***a* of the bite member **210**, the evacuation tube **230** still exits the patient's mouth anteriorly rather than laterally, thereby creating greater patient comfort and increased operative area for the operator's hands and instruments.

[0112] FIGS. **18-19** show an intra-oral device **300** in accordance with another embodiment of the invention. As shown, the device **300** includes the same overall components that were discussed above, namely, a bite member **310**, a bite grip **320**, a tongue shield aspirator **340**, and an evacuation tube **330** that, at one end, is attached to a HVE valve **99**. FIGS. **20-23** provide further details of these components.

[0113] As shown in FIGS. **20**A-**20**E, the bite member **310** includes a top side **314** and a bottom side **316**, wherein the anterior edge **314***c* of the top side **314** and the anterior edge **316***c* of the bottom side **316** may be beveled. In addition, the top side **314** and bottom side **316** of the bite member **310** lie in divergent planes, i.e., respective planes that diverge from one another at an acute angle so as to accommodate a patient's mouth in the open position. In this way, the patient's mouth may be maintained open at various angles depending on the actual position of the bite member when placed in the mouth. For example, given the acute angle between the divergent planes of the top side **314** and bottom side **316**, the father back (i.e., posteriorly) in the mouth the bite member is placed, the more open (i.e., the larger the opening of) the mouth. Obviously, the extent of such opening will be limited by the patient's anatomy.

[0114] As shown in FIGS. **19** and **20**, the bite member **310** includes a conduit **312** to allow insertion of a tongue shield aspirator and an evacuation tube into the body of the bite member. However, in contrast with the embodiments described previously, the conduit **312** extends through the bite member **310** at an oblique angle with respect to the vertical. Thus, the conduit has a distal end **312***a* that is coplanar with a distal side **315** of the bite member **310** and is configured to matingly receive a neck of a tongue shield

aspirator, and a proximal end **312***b* that extends through the corner that connects the bite member's proximal side **317** and anterior side (i.e., anterior face) **318** and is configured to receive an end of an evacuation tube. As will be described below, offsetting of the conduit—and, therefore, of the distal end **312***a* thereof—at an oblique angle decreases resistance to airflow through the tongue shield aspirator-bite member combination.

[0115] As has been noted previously, the bite members described herein may be generally made of material, and in such a way, that when coupled to a bite grip, may create a spring-like quality. In this regard, the top side **314** of the bite member **310** includes cavities (or core-outs) **314***d* that allow for and/or enhance the spring effect when covered with an upper member of a bite grip. Similarly, the bottom side **316** of the bite member **310** includes cavities **316***d* that allow for and/or enhance the spring-like quality when covered with a lower member of a bite grip.

[0116] The bite grip **320** shown in FIGS. **21**A and **21**B is substantially identical to the bite grip **220** shown in FIGS. **16**A and **16**B. Thus, as described previously, the bite grip **320** includes an upper member **324** that is connected to a lower member **326** via a spine **328**. The upper member **324** includes pockets **324***a*, **324***b* for receiving therein respective protrusions **314***a*, **314***b* on the top member **314** of the bite member **310**. Similarly, the lower member **326** includes pockets **326***a*, **326***b* for receiving therein respective protrusions **316***a*, **316***b* on the bottom member **316** of the bite member **310**. In addition, at a respective anterior edge thereof, the upper member **324** may include a lip **324***c*, and the lower member **326** may include a lip **326***c*, with the former being configured to fit around the beveled edge **314***c*, and the latter being configured to fit around the beveled edge **316***c*, of the bite member **310**. Moreover, each of the upper member **324** and the lower member **326** may include, on its respective outer surface, shaped regions **329**, which are adapted to serve as "tooth" or "molar" guides for a more secure fit between the patient's upper and lower jaws.

[0117] FIGS. **22**A and **22**B show an evacuation tube **330** having a first end **332**, which is configured for slideable insertion through the proximal end **312***b* of the bite member **310**, and a second end **338**, which is configured to be removably coupled directly to a high-volume evacuation (HVE) valve. As shown, the evacuation tube **330** may include a single bend **334** so as to be generally L-shaped, with an inner angle α approximately equal to 100°. In embodiments of the invention, the angle α may be between about 85° and about 110°.

[0118] Proximate its first end **332**, the evacuation tube **330** may include a radial flange **333** which, in turn, includes one or more radial indentation(s) **335**. In the illustrative embodiment shown in FIGS. **22**A and **22**B, the radial flange **333** includes three such indentations, which are circumferentially spaced apart at irregular intervals. As shown, e.g., in FIG. **20**E, the bite member **310** may include one or more internal (radial) protrusion(s) **313** which extend radially inwards, towards the central axis of the conduit **312**, and extend longitudinally from the proximal end **312***b* of the conduit **312** towards its distal end **312***a*. In the illustrative embodiment shown, the bite member **310** includes three such protrusions, which are also circumferentially spaced apart at irregular intervals, but disposed such that, in a given orientation, and only in that orientation, the protrusions **313** will be aligned with the indentations **335** of the evacuation tube **330**.

[0119] The above-described combination of indentation(s) and protrusion(s) provides a lock-and-key locking mechanism for maintaining the evacuation tube **330** in a longitudinally-locked, but rotatable relationship relative to the bite member **310**. In practice, in order to detachably secure the evacuation tube **330** to the bite member **310** when the latter is held between a patient's upper and lower teeth (e.g., in the position shown in FIG. **20**E), the indentations **335** are first lined up with the protrusions **313**, and the first end **332** of the evacuation tube **330** is moved inwardly through the proximal end **312***b* of the conduit **312**. Once the edge **336** of the evacuation tube **330** has reached the protrusions **313**, the evacuation tube **330** is rotated, either clockwise or counter-clockwise, to lock the evacuation tube **330** with respect to the bite member **310**. In order to remove the evacuation tube, the above-described process is reversed, wherein the evacuation tube is turned until the indentations **335** are again aligned with the protrusions **313**, and then the evacuation tube is pulled outwardly.

[0120] In embodiments of the invention, the protrusions **313** and indentations **335** may be positioned such that the evacuation tube **330** can be inserted into, and removed from, the bite member **310** only when rotated in the anterior position. Thus, by way of example, FIG. **20**E shows the position of the bite member **310** as it would be held between a patient's right-hand upper and lower teeth. The perspective of FIG. **20**E is therefore that of one looking at the patient's right profile. With reference to FIG. **18**, the evacuation tube must be connected to the bite member **310** shown in FIG. **20**E such that, in use, the second end **338** of the evacuation tube points generally to the left of the diagram, i.e., away from the patient's mouth. For ease of discussion, this may be referred to as "Position **2**". However, given the placement of the protrusions **313**, the latter will be aligned with the indentations **335** only when the evacuation tube **330** is oriented such that its second end **338** points generally to the right of the diagram. For ease of discussion, this may be referred to as "Position **1**". In practice, therefore, once the protrusions and mating indentations have been aligned and the first end **332** of the evacuation tube is inserted into the conduit **312**, the evacuation tube **330** is rotated about 180° so as to be placed in Position **2**. Given that the evacuation tube may be separated from the bite member only in Position **1**, the lock-and-key mechanism ensures that the evacuation tube will not detach from the bite member during use, even if the evacuation tube-HVE valve assembly happens to be rotated by a few degrees, as long as the evacuation tube is not rotated all the way back to Position **1**. In addition, given the configuration of the conduit **312** and the evacuation tube **330**, during use, the evacuation tube **330** exits the patient's mouth at the conduit's oblique angle, rather than laterally, and then bends at an angle α, thereby creating greater patient comfort and increased operating space for the operator's hands and instruments.

[0121] FIGS. **23**A-C show a tongue shield aspirator **340** in accordance with an embodiment of the present invention. The tongue shield aspirator **340** includes features that are similar to those described above in connection with the tongue shield aspirators **40**, **240** shown in FIGS. **3** and **4**. Specifically, the tongue shield aspirator **340** has a first (proximal) flap **340***a*, which is configured to retract a patient's tongue, and a second (distal) flap **340***b*, which is configured to retract a patient's cheek. The first and second flaps are joined to one another at a transition section **349** such that, when viewed from the perspectives shown in FIGS. **23**A and **23**B, the transition

section **349** forms the narrowest section of the tongue shield aspirator **340**, thereby forming an isthmus between the flaps **340***a*, **340***b*. As before, it is noted that, although the flaps **340***a*, **340***b* are described as being "joined" at the transition section **349**, this is simply for ease of reference. In practice, the tongue shield aspirator **340** may be manufactured as a one-piece, or unitary, component, or the two flaps **340***a*, **340***b* may be manufactured separately, and then coupled to one another at the transition section **349**.

[0122] The tongue shield aspirator **340** includes a longitudinal hollow lumen (not shown, but substantially identical to the longitudinal hollow lumen **41** shown in FIG. **3**) that is in fluid communication with a multiplicity of channels that may extend at an angle therefrom. More specifically, the proximal flap **340***a* and/or the distal flap **340***b* of the tongue shield aspirator **340** may be formed from a first (posterior) layer **348***a* and a second (anterior) layer **348***b* which are connected to, but spaced apart from, one another by transverse walls **348***c* (shown in phantom in FIG. **23**A). As shown, e.g., in FIG. **23**C, each set of two consecutive walls **348***c* that are disposed above the longitudinal lumen forms an upper channel **342** which extends from the longitudinal lumen towards the top edge **340***c* of the proximal flap **340***a*. Similarly, each set of two consecutive walls **348***c* that are disposed below the longitudinal hollow lumen forms a lower channel **343** which extends from the longitudinal lumen towards the bottom edge **340***d* of the proximal flap **340***a*. With this construction, the longitudinal hollow lumen itself is formed as an axial passageway having intermittent boundary sections that are defined by the ends of the transverse walls **348***c* that are closest to the longitudinal lumen. In this way, the channels **342**, **343** provide a plurality of conduits for debris and fluid evacuation, thereby allowing for simultaneous aspiration of debris and fluid from top (palate of mouth) to bottom (floor of mouth), and through the passageway, during dental procedures.

[0123] It is again noted that, while, in the embodiment of FIGS. **23**A-C, the tongue shield aspirator **340** is shown to include a plurality of upper channels and a plurality of lower channels, this is by way of illustration only. Thus, a tongue shield aspirator in accordance with embodiments of the invention may include one or more of each of the upper channel(s) **342** and lower channel(s) **343**. In addition, the posterior and anterior layers **348***a*, **348***b* and the transverse walls **348***c* may be made of flexible material so as to enable proper placement of the tongue shield aspirator in the patient's mouth. Thus, each of the walls **348***c* is "transverse" in that it is generally perpendicular to the inner surfaces of the posterior and anterior layers **348***a*, **348***b* when the tongue shield aspirator is laid flat (i.e., as shown in the figures) but flexes along with these layers **348***a*, **348***b* when the tongue shield aspirator itself is flexed, e.g., for placement in the patient's mouth.

[0124] As discussed previously in connection with the embodiments of FIGS. **3** and **4**, a tongue shield aspirator having the above-described construction may be considered an "open" tongue shield in the sense that the upper and lower edges of the tongue shield are open to, or in communication with, the patient's oral cavity. Thus, with reference to FIGS. **23**A-C, each upper channel **342** extends towards the open top edge **340***c* of the proximal flap **340***a*, wherein the top edge **340***c* is formed by the respective top edges of the posterior layer **348***a* and the anterior layer **348***b* in the region of the proximal flap **340***a*. Similarly, each lower channel **343** extends towards the open bottom edge **340***d* of the proximal flap **340***a*, wherein the bottom edge **340***d* is formed by the respective bottom edges of the posterior layer **348***a* and the anterior layer **348***b* in the region of the proximal flap **340***a*. In this way, each of the top edge **340***c* and the bottom edge **340***d* of the proximal flap **340***a* is open along the entirety of the length thereof. In embodiments of the invention, the upper opening defined by the space between the top edges of the anterior and posterior layers, and the lower opening defined by the space between the bottom edges of the anterior and posterior layers may extend through the transition section **349** (as shown, e.g., in FIG. **23**C), as well as at least a portion of the distal flap **340***b*.

[0125] FIG. **23**C also shows a hollow neck **346** that is symmetrical with respect to the planes of the posterior and anterior layers **348***a*, **348***b*. Thus, in contrast to the embodiments shown in FIGS. **3** and **4**, where the necks **46**, **246** extend at an angle from the respective planes of the tongue shield aspirators **40**, **240**, the neck **346** of the tongue shield aspirator **340** shares the central axis of the longitudinal passageway defined therethrough. Thus, the passageway extends from a distal end **346***b*, through the proximal flap **340***a*, and through the proximal end **346***a* of the neck **346**. As such, the proximal end of the passageway coincides with the proximal end of the hollow neck. In embodiments of the invention, the distal end **346***b* of the passageway may be located at a point along a longitudinal portion of the proximal flap **340***a*, the transition section **349**, or the distal flap **340***b*.

[0126] With reference to FIGS. **18-20**, the neck **346** is configured to be matingly received through the distal end **312***a* of the bite member's conduit **312**. In this regard, on its posterior side, the neck **346** may include a longitudinal projection **344** that mates with a groove **311** defined within a wall of the conduit **312**. Specifically, as shown, e.g., in FIGS. **20**A and **20**D, the groove **311** starts from the distal end **312***a* and extends longitudinally through a portion of the conduit **312**. Thus, when assembling the device **300**, the projection **344** aids in correctly orienting the tongue shield aspirator **340** with respect to the bite member **310**. In addition, when assembled, the combination of the projection **344** and the groove **311** prevents rotation of the tongue shield aspirator **340**. As such, in embodiments of the invention, the tongue shield aspirator mates with the bite member in a non-rotational, as well as a non-pivotable, manner.

[0127] Referring back to FIGS. **23**A-C, in embodiments of the invention, one or both of the flaps **340***a*, **340***b* may include finger-like projections **345** on the bottom and/or top edge thereof, thereby creating a "one-size-fits-all" feature and providing a comfortable form-fitting seal within the patient's mouth. Thus, in the embodiment shown, each of the posterior and anterior layers includes projections **345** on each of its top and bottom edges in the region of the proximal flap **340***a*, with the posterior layer having a profile that extends beyond the profile of the anterior layer, i.e., the top and bottom edges of the posterior layer extend beyond the respective top and bottom edges of the anterior layer. Moreover, the tongue shield aspirator **340** may include a longitudinal stiffener **347** on the anterior layer **348***b* to prevent kinking when the tongue shield aspirator is flexed and/or bent for placement within the patient's oral cavity.

[0128] It is also noted that the first end **332** of the evacuation tube **330** is configured to fit within the hollow neck **346** of the tongue shield aspirator **340**. Thus, when assembled, the tongue shield aspirator's neck receives therein the first end

332 of the evacuation tube so as to form a friction fit within the bite member's conduit **312**, thereby decreasing the likelihood of leakage and improving stability of the assembled device. In connection with the assembled device, as mentioned previously, offsetting of the conduit—and, therefore, of the distal end **312***a* thereof—at an oblique angle decreases resistance to airflow through the tongue shield aspirator-bite member combination. This goal is also furthered by the symmetrical, rather than angled, placement of the neck **346** with respect to the planes of the posterior and anterior layers **348***a*, **348***b*.

[0129] FIGS. **24**A-D show a tongue shield aspirator **440** in accordance with an alternative embodiment of the invention. As shown in the Figures, the tongue shield aspirator **440** is substantially similar to the tongue shield aspirator **340** discussed immediately above. Thus, tongue shield aspirator **440** is an open component having a first (proximal) flap **440***a*, which is configured to retract a patient's tongue, a transition section **449**, a second (distal) flap **440***b*, which is configured to retract a patient's cheek, and a longitudinal passageway **441** that is in fluid communication with one or more channels that may extend at an angle from the passageway.

[0130] The proximal flap **440***a* and/or the distal flap **440***b* of the tongue shield aspirator **440** may be formed from a first (posterior) layer **448***a* and a second (anterior) layer **448***b* which are connected to, but spaced apart from, one another by walls **448***c* (shown in phantom in FIG. **24**A). As shown, e.g., in FIGS. **24**A and **24**C, each set of two consecutive walls **448***c* that are disposed above the passageway forms an upper channel **442** which extends from the passageway towards the top edge **440***c* of the proximal flap **440***a*. Similarly, each set of two consecutive walls **448***c* that are disposed below the longitudinal hollow lumen forms a lower channel **443** which extends from the longitudinal lumen towards the bottom edge **440***d* of the proximal flap **440***a*.

[0131] The tongue shield aspirator **440** also includes a hollow neck **446** that is symmetrical with respect to the planes of the posterior and anterior layers **448***a*, **448***b*, such that the passageway **441** extends from a distal end **446***b*, through the proximal flap **440***a*, and through the proximal end **446***a* of the neck **446**. As such, the proximal end of the passageway coincides with the proximal end of the hollow neck. In embodiments of the invention, the distal end **446***b* of the passageway may be located at a point along a longitudinal portion of the proximal flap **440***a*, the transition section **449**, or the distal flap **440***b*.

[0132] The hollow neck **446** is configured to receive therein the first end **332** of the evacuation tube **310** so as to form a friction fit within the bite member's conduit **312**. In addition, on its posterior side, the neck **446** may include a longitudinal projection **444** that mates with the groove **311**. The tongue shield aspirator **440** may also include a longitudinal stiffener **447** on the anterior layer **448***b* to prevent kinking when the tongue shield aspirator is flexed and/or bent for placement within the patient's oral cavity.

[0133] As with the embodiment shown in FIG. **23**, the posterior layer **448***a* may have a profile that extends beyond the profile of the anterior layer **448***b*, i.e., the top and bottom edges of the posterior layer extend beyond the respective top and bottom edges of the anterior layer. However, in contrast with the tongue shield aspirator **340**, the tongue shield aspirator **440** has no projections (i.e., similar to projections **345**) on the posterior layer **448***a*, and the anterior layer **448***b* now includes a cut-out pattern along at least a portion of each of its top and bottom edges in the region of the proximal flap **440***a*. Specifically, with reference to FIG. **24**A, each upper channel **442** has a lower end that is in direct fluid communication with the passageway **441**, and an upper end towards the top edge of the anterior layer **448***b*. Similarly, each lower channel **443** has an upper end that is in direct fluid communication with the passageway **441**, and a lower end towards the lower edge of the anterior layer **448***b*. In turn, the top edge of the anterior layer **448***b* includes an indentation **442***a* proximate the upper end of one or more of the upper channel(s) **442**, and the bottom edge of the anterior layer **448***b* includes an indentation **443***a* proximate the lower end of one or more of the lower channel(s) **443**.

[0134] Thus, in the illustrative embodiment shown in FIG. **24**A, there are three such indentations **442***a*, **442***b* on each of the top and bottom edges of the anterior layer **448***b* in the region of the proximal flap **440***a*. Together, the three top indentations **442***a* comprise a top cut-out pattern, and the three bottom indentations **443***a* comprise a bottom cut-out pattern, each of which aids in enhancing debris and fluid aspiration from the patient's oral cavity. It is noted that, in embodiments of the invention, each of the top and bottom edges of the anterior layer **448***b* may include one or more such indentations, which indentations may be disposed further (distally) along the tongue shield, e.g., in and/or around the transition section **449**.

[0135] FIGS. **25**A-D show an open tongue shield aspirator **540** in accordance with an alternative embodiment of the invention. As shown in the figures, the tongue shield aspirator **540** is substantially similar to the tongue shield aspirator **440** discussed immediately above, except for the following differences. First, as shown in FIGS. **25**A and **25**D, the anterior layer **548***b* does not extend as far distally as the posterior layer **548***a*. Rather, in this embodiment, the anterior layer **548***b* is longitudinally shorter than the posterior layer **548***a*, such that the distal edge **548***d* of the anterior layer **548***b* is located proximally to the distal edge of the posterior layer **548***a* (i.e., located proximally to the distal edge of the distal flap **540***b*).

[0136] The tongue shield aspirator **540** also includes a hollow neck **546** that is symmetrical with respect to the planes of the posterior and anterior layers **548***a*, **548***b*, such that the passageway **541** extends from a distal end **546***b*, through the proximal flap **540***a*, and through the proximal end **546***a* of the neck **546**. As such, the proximal end of the passageway coincides with the proximal end **546***a* of the hollow neck, and the distal end **546***b* of the passageway coincides with the distal end **548***d* of the anterior layer **548***b*. Thus, in the embodiment shown in FIGS. **25**A-**25**D, the tongue shield aspirator **540** is open in the sense that, in addition to the upper and lower edges of the tongue shield, the distal end of the passageway is also open to, or in communication with, the patient's oral cavity. This provides various advantages, including enhanced fluid and debris aspiration, as well as facilitated bending at or around the transition section **549**.

[0137] Second, in addition to the anterior longitudinal stiffener **547**, the tongue shield aspirator **540** may also include a posterior longitudinal stiffener **545** on the back (i.e., posterior) side of the posterior layer **548***a* for added support, e.g., when the tongue shield aspirator is flexed and/or bent for placement within the patient's oral cavity. In the embodiment of FIG. **25**, the anterior stiffener **547** is integral with the neck **546**, and has a distal end that coincides with the distal end of the anterior layer **548***b*. The posterior stiffener **545** is also

integral with (a posterior side of) the neck **546**, but extends longitudinally past the transition section **549**, as shown in FIG. **25**B.

[0138] As mentioned, the tongue shield aspirator **540** is substantially similar to the tongue shield aspirator **440**. Thus, for example, the tongue shield aspirator **540** may include one or more top indentations **542***a* and one or more bottom indentations **543***a*. In addition, as shown in FIG. **25**A, the distal edge **548***d* of the anterior layer **548***b* and/or the distal edge of the anterior stiffener **547** may include a longitudinal indentation to further enhance debris and fluid aspiration from the patient's oral cavity.

[0139] FIG. **25**E shows an intra-oral device **500** in accordance with this embodiment of the invention. As shown, in addition to the tongue shield aspirator **540**, the device **500** includes the same overall components that were discussed above in connection with FIG. **18**, namely, a bite member **310**, a bite grip **320**, and an evacuation tube **330** that, at one end, is attached to a HVE valve **99**.

[0140] FIGS. **26**A-**26**B show an open tongue shield aspirator **640** in accordance with an alternative embodiment of the invention. As shown in the figures, the tongue shield aspirator **640** is substantially similar to the tongue shield aspirator **540** discussed above, except that the tongue shield aspirator **640** now includes a raised portion **648***e* on the distal flap **640***b*. Thus, as in FIGS. **25**A and **25**D, the anterior layer **648***b* is longitudinally shorter than the posterior layer **648***a*, such that the distal edge **648***d* of the anterior layer **648***b* is located proximally to the distal edge of the posterior layer **648***a* (i.e., located proximally to the distal edge of the distal flap **640***b*). The tongue shield aspirator **640** also includes a hollow neck **646** that is symmetrical with respect to the planes of the posterior and anterior layers **648***a*, **648***b*, such that the passageway **641** extends from a distal end **646***b*, through the proximal flap **640***a*, and through the proximal end **646***a* of the neck **646**. As such, the proximal end of the passageway coincides with the proximal end **646***a* of the hollow neck, and the distal end **646***b* of the passageway coincides with the distal end **648***d* of the anterior layer **648***b*. Thus, the tongue shield aspirator **640** is open to, or in communication with, the patient's oral cavity through the distal end of the passageway as well as the upper and lower edges of the tongue shield.

[0141] Also, in addition to the anterior longitudinal stiffener **647**, the tongue shield aspirator **640** may also include a posterior longitudinal stiffener **645** on the back (i.e., posterior) side of the posterior layer **648***a* for added support. As before, the anterior stiffener **647** may be integral with the neck **646**, and has a distal end that coincides with the distal end of the anterior layer **648***b*. The posterior stiffener **645** may also be integral with (a posterior side of) the neck **646**, and may extend longitudinally past the transition section **649**.

[0142] Moreover, the tongue shield aspirator **640** may include one or more top indentations **642***a* and one or more bottom indentations **643***a*. In addition, the distal edge **648***d* of the anterior layer **648***b* and/or the distal edge of the anterior stiffener **647** may include a longitudinal indentation to further enhance debris and fluid aspiration from the patient's oral cavity.

[0143] As shown in FIGS. **26**A-**26**B, however, on its anterior side, the posterior layer **648***a* includes a raised portion **648***e* that, distally, may abut the distal end of the distal flap **640***b*. Proximally, however, the raised portion **648***e* may be shaped so as to guide fluid and debris towards the distal end **646***b* of the passageway **641**. Thus, in the exemplary embodiment shown in FIG. **26**A, the proximal side of the raised portion **646***e* is shaped like a truncated triangle, such that, when placed in a patient's oral cavity, fluid and/or debris from a top side of the cavity is directed towards the passageway **641** along the Arrow "B", while fluid and/or debris from a bottom side of the cavity is directed towards the passageway **641** along the Arrow "A". As noted, however, other shapes and configurations may also be used, so long as the proximal side of the raised portion **648***e* helps guide fluid/debris towards the passageway **641**.

[0144] It is noted that, in embodiments of the invention, such as those shown, e.g., in FIGS. **23**-**24**, the anterior stiffener (e.g., stiffener **347**) may extend distally from the anterior side of the hollow neck. In other embodiments, however, the stiffener may be physically separate from the neck, may be comprised of a series of spaced-apart, smaller stiffeners, and/or may be disposed on the anterior layer at various points along the longitudinal axis of the tongue shield aspirator. Similarly, in FIGS. **25**-**26**, e.g., the posterior stiffener (e.g., the stiffener **545**) is shown to extend distally from the posterior side of the hollow neck. In other embodiments, however, the posterior stiffener may be physically separate from the neck, may be comprised of a series of spaced-apart, smaller stiffeners, and/or may be disposed on the posterior layer at various points along the longitudinal axis of the tongue shield aspirator.

[0145] FIGS. **27**A and **27**B show an intra-oral device **600** after placement within a patient's mouth. Specifically, FIG. **27**A shows the placement of the device **600** and, more particularly, of the bite member-bite grip **310**, **320** combination between the patient's upper and lower jaws without showing the patient's mouth or cheeks. FIG. **27**B shows the latter and, as such, shows the distal portion of the distal flap **640***b* in phantom, as this portion is bent within the mouth so as to retract the patient's cheek. It is noted that, while FIGS. **27**A and **27**B, as well as the ensuing discussion in connection with methodology, are directed to the intra-oral device **600** and its constituent components, this is for illustrative purposes only, and the discussion may be equally applicable to one or more of the other intra-oral devices and/or components described herein.

[0146] As has been noted previously, the intra-oral device **600** may be assembled by attaching an unused bite grip **320** to a sterilized bite member **310**. The autoclavable components of the device, such as, e.g., the bite member **310** and the evacuation tube **330** may be sterilized in steam autoclave at a (max) temperature of 134° C. Next, an unused tongue shield **640** is inserted into the distal end **312***a* of the conduit **312** of the bite member, such that the proximal edges of the posterior and anterior layers **648***a*, **648***b* are flush with the distal side **315** of the bite member **310** (see, e.g., FIG. **20**). A sterilized evacuation tube **330** is then inserted into the proximal end **312***b* of the conduit **312**, ensuring that the evacuation tube is rotated so as to be in its most anterior or forward position and such that the protrusions **313** are aligned with the indentations **335** of the evacuation tube **330**. As the evacuation tube is inserted into the bite member, its distal end is configured to insert into the hollow neck **646** of the tongue shield **640** within the conduit **312**. The evacuation tube **330** is then rotated to lock it in place. Finally, the proximal end of the evacuation tube is inserted directly into a HVE valve **99** (see, e.g., FIG. **25**E).

[0147] Once assembled, the intra-oral device **600** may be inserted into the patient's oral cavity. Prior to doing so, how-

ever, water may be sprayed on the posterior side of the tongue shield aspirator (i.e., the side that will be in contact with the patient's tongue so as to retract it) to lubricate it. To insert the intra-oral device, the bite member-bite grip combination is positioned toward the center of the patient's mouth, and then gently inserted and moved towards a lateral position—which may, e.g., be performed with a curling, or rotating motion—within the cavity, preferably in one smooth motion. Thus, in the illustrative example shown in FIG. **27**, the bite member-bite grip combination is first positioned (outside the mouth) towards the center of the mouth. With the proximal side (i.e., the left side looking at the diagrams in FIGS. **27**A and **27**B) of the device held with one hand, the operator then gently bends the distal side, such that the distal flap **640***b* curls outwards from the plane of the page in FIG. **27**.

[0148] With the patient's mouth open, the bite member-bite grip combination is then inserted into the mouth and moved towards the left of the diagrams in FIG. **27**, until it reaches the space between the upper and lower teeth. After the bite member-bite grip combination has been inserted into the mouth, and as it begins to be moved to a lateral position within the mouth, the rest of the device—i.e., the proximal flap, the transition section, etc., of tongue shield aspirator—follows, such that, by the time the bite member-bite grip combination is at the patient's teeth, the operator begins to release the bending pressure on the distal end of the tongue shield aspirator so as to enable it to become uncurled within the mouth.

[0149] In following the bite member-bite grip combination, as it enters the mouth, the tongue retractor portion (e.g., the proximal flap **640***a*) of the tongue shield aspirator folds as its top and bottom edges encounter the incisal edges of the anterior teeth, thereby gently pressing the tongue into a retracted position. The bite member-bite grip combination is now positioned behind the first mandibular bicuspid—on the right quadrant of the patient's mouth in FIG. **27**—and the transition section is positioned distal to the last molar(s)—on the left quadrant of the patient's mouth in FIG. **27**. The distal flap **640***b* is then released so as to uncurl and retract the patient's (left) cheek. With the device in position, the patient is then asked to close gently and so as to position the bite member-bite grip combination comfortably between maxillary and mandibular teeth of the mouth's left quadrant. With the HVE valve having been assembled, as described above, prior to insertion of the device, the valve may now be turned on so that treatment may be started.

[0150] It is noted that FIGS. **27**A and **27**B illustrate the positioning of the intra-oral device **600** in the mouth so as to prepare an obstruction-free operative space on the left side of the patient's mouth. For work to be performed on the right side of the patient's mouth, the same assembly and insertion procedures as those described above would be followed, expect that, here, the evacuation tube-HVE valve combination would be positioned to the right, and the distal flap **640***b* to the left, side of the diagram shown in FIG. **27** and, upon insertion into the oral cavity, the bite member-bite grip combination would be moved to the right side of the diagrams. No additional steps are required; as has been noted previously, the bite member is fully symmetrical, and the tongue shield aspirator is symmetrical about its longitudinal axis and, as such, configured for bilateral use in the mouth.

[0151] As has been discussed previously, any one or more of the tongue shield aspirators described in the present application may be adapted for manufacture in a variety of sizes, including adult and pediatric sizes. In addition, or in the alternative, any one or more of the tongue shield aspirators described in the present application may include a "one-size-fits-all" feature, whereby the periphery of the posterior layer and/or the anterior layer of the tongue shield aspirator may be trimmed for a more precise fit in the patient's mouth. In this regard, it is important to note that the shapes and sizes, including the relative sizes, of the posterior and anterior layers and the proximal and distal flaps are not limited to those described or shown. Rather, these elements may take on various shapes and/or sizes.

[0152] Thus, for example, FIGS. **28**A and **28**B show a tongue shield aspirator **740** according to an embodiment of the invention, wherein the anterior layer **748***b* and neck **746** of the tongue shield aspirator **740** are identical to the anterior layer **648***b* and neck **646** of the tongue shield aspirator shown, e.g., in FIG. **26**. However, the posterior layer **748***a* is now configured such that each of the proximal flap **740***a* and the distal flap **740***b* is larger in size, and of a quasi-rectangular, rather than simply an arcuate, shape. As in the embodiment shown in FIG. **26**, the posterior layer **748***a* may also include a raised portion **748***e* on its distal flap **740***b* for helping direct debris and fluids toward the passageway **741**. In embodiments of the invention, the proximal and distal flaps may take on various shapes and sizes.

[0153] Similarly, in alternative embodiments, in addition to, or in place of, varying the shapes and/or relative sizes of the proximal and distal flaps, the above-mentioned "one-size-fits-all" feature enables not only peripheral trimming, but also shortening of the tongue shield aspirator by cutting along a line that is generally perpendicular to its the longitudinal axis and is positioned proximally to the tongue shield's distal end. Thus, for example, FIGS. **29**A-**29**C show a the tongue shield aspirator **840** that has been trimmed, or cut, so as to include a proximal flap **840***a* only.

[0154] As shown, the tongue shield aspirator **840** includes all of the elements of, e.g., the tongue shield aspirator **640** shown in FIGS. **26** and **27**, except that it has been cut proximally to the distal end of the anterior layer **648***b*. Thus, although the anterior layer **848***b* of the tongue shield aspirator **840** still includes a cut-out pattern along at least a portion of its top and bottom edges, it no longer includes a longitudinal indentation at its distal edge. The tongue shield aspirator **840** does, however, still include a hollow neck **846** which has a longitudinal projection **844** on its posterior side and is in fluid communication with the passageway **841**, an anterior stiffener **847**, a posterior stiffener **845**, walls **848***c*, etc. It should be noted that the tongue shield aspirator may be trimmed along different points on its longitudinal axis. Thus, for example, the tongue shield aspirator may be cut at the distal end of the passageway, or at a point along the transition section, etc.

[0155] FIGS. **30**A and **30**B show placement of the tongue shield aspirator **840** within a patient's mouth. As can be seen, this is substantially identical to the diagrams shown in FIGS. **27**A and **27**B, except that the tongue shield aspirator no longer includes a distal flap for retracting the patients' (left) cheek. As discussed in connection with FIG. **27**, in order to prepare an operative space on the right side of the patient's mouth, the same assembly and insertion procedures as those described above would be followed, expect that, here, the evacuation tube-HVE valve combination would be positioned to the right, and the distal end of the proximal flap **840***a* to the left, side of the diagram shown in FIG. **30**.

[0156] It is also important to note that one or more of the components discussed in the instant application may be adapted for use in conjunction with one or more of the other components described herein. Thus, for example, any one of the bite members discussed herein may be adapted for use with any one of the tongue shield devices discussed herein, and any one or more of the latter combination of components may be adapted for use with, e.g., any one of the evacuation tubes discussed herein, and so on. In addition, while a specific type of HVE valve **99** is described and shown in the diagrams, this is by way of illustration, and not limitation. As such, any standard-sized (e.g., ½-inch diameter) HVE may be used in conjunction with the components of the inventions described herein.

[0157] Also, as mentioned previously in connection with the tongue shield aspirator **40**, although the flaps of the tongue shield aspirator of the various embodiments of the invention are described herein as being "joined" at a transition section (e.g., transition section **49**), this is simply for ease of reference. In practice, any of the tongue shield aspirators described hereinabove may be manufactured as a unitary one-piece component, or the two flaps (e.g., flaps **40***a*, **40***b*) may be manufactured separately, and then joined to one another at the transition section.

[0158] While the description above refers to particular embodiments of the present invention, it will be understood that many modifications may be made without departing from the spirit and scope thereof. The accompanying claims are intended to cover such modifications as would fall within the true scope and spirit of the present invention.

[0159] The presently disclosed embodiments are therefore to be considered in all respects as illustrative and not restrictive, the scope of the invention being indicated by the appended claims, rather than the foregoing description, and all changes which come within the meaning and range of equivalency of the claims are therefore intended to be embraced therein.

What is claimed is:

1. An intra-oral device comprising:

an open tongue shield aspirator including:

a first layer having a posterior side, an anterior side, a proximal edge, a distal edge, a bottom edge, and a top edge;

a second layer having a posterior side, an anterior side, a proximal edge, a distal edge, a bottom edge, and a top edge, wherein the proximal edges of the first and second layers are substantially flush with each other, and the posterior side of the second layer is connected to the anterior side of the first layer by a plurality of walls such that the first and second layers are spaced apart from one another and define therebetween an axial passageway, said passageway having a distal end that coincides with the second layer's distal edge and is configured to be directly exposed to a patient's oral cavity; and

a hollow neck extending proximally from the proximal edges of the first and second layers and in fluid communication with said passageway, wherein the neck's proximal end constitutes the passageway's proximal end;

an evacuation tube having a first end, and a second end configured to be coupled directly to a high-volume evacuation (HVE) valve; and

a bite member configured to be disposed between the patient's upper and lower teeth and defining a conduit therethrough, wherein, at a distal end of the conduit, the bite member is configured to detachably mate with the neck of the tongue shield aspirator and, at a proximal end of the conduit, the bite member is configured to detachably mate with the first end of the evacuation tube, thereby providing fluid communication between the HVE valve and the patient's oral cavity via said evacuation tube, conduit, and passageway.

2. The device of claim **1**, wherein the tongue shield aspirator and the bite member are made of different materials.

3. The device of claim **1**, wherein at least one of the bite member and the evacuation tube is made of autoclavable material.

4. The device of claim **3**, wherein the bite member and the evacuation tube are made of autoclavable resin.

5. The device of claim **3**, wherein said autoclavable material is an amorphous thermoplastic polyetherimide.

6. The device of claim **1**, wherein the tongue shield aspirator is made of flexible material.

7. The device of claim **6**, wherein said material is a soft thermoplastic elastomer.

8. The device of claim **1**, wherein the tongue shield aspirator includes a proximal flap configured to retract the patient's tongue.

9. The device of claim **8**, wherein the tongue shield aspirator further includes a distal flap configured to retract the patient's cheek.

10. The device of claim **8**, wherein the proximal and distal flaps are joined to one another at a transition section, said transition section being narrower than each of the flaps so as to form an isthmus therebetween.

11. The device of claim **10**, wherein the first layer is a unitary component.

12. The device of claim **10**, wherein the proximal flap and the distal flap are separate components and are individually coupled to the transition section.

13. The device of claim **10**, wherein at least one of the proximal flap, the distal flap, and the transition section is made of position-memory material.

14. The device of claim **8**, wherein the distal flap includes a raised portion to direct fluid towards the passageway's distal end.

15. The device of claim **1**, wherein the tongue shield aspirator is a unitary component.

16. The device of claim **1**, wherein the second layer is longitudinally shorter than the first layer, such that the distal edge of the second layer is proximal to the distal edge of the first layer.

17. The device of claim **1**; said plurality of walls including two walls disposed above the axial passageway so as to form an upper channel extending from the passageway towards the top edge of the second layer, and two walls disposed below the axial passageway so as to form a lower channel extending from the passageway towards the bottom edge of the second layer, wherein the upper channel provides fluid communication between the passageway and an upper portion of the patient's oral cavity, and the lower channel provides fluid communication between the passageway and a lower portion of the patient's oral cavity.

18. The device of claim **17**, further including at least three upper walls above the passageway, wherein each set of two consecutive upper walls forms an upper channel, and at least

three lower walls below the axial passageway, wherein each set of two consecutive lower walls forms a lower channel, so as to form a multiplicity of upper and lower channels that provide fluid communication between the passageway and the patient's oral cavity.

19. The device of claim **17**, wherein each said channel extends at an angle with respect to the axial passageway.

20. The device of claim **17**, wherein the upper channel has an upper end towards the top edge of the second layer, the lower channel has a lower end towards the lower edge of the second layer, the top edge of the second layer includes an indentation proximate said upper end of the upper channel, and the bottom edge of the second layer includes an indentation proximate said lower end of the lower channel.

21. The device of claim **1**, wherein the second layer's distal edge that coincides with the passageway's distal end includes a longitudinal indentation.

22. The device of claim **1**, wherein the tongue shield aspirator includes a longitudinal stiffener.

23. The device of claim **1**, wherein the tongue shield aspirator mates with the bite member in a non-rotational, non-pivotable manner.

24. The device of claim **1**, wherein a posterior side of the neck includes a longitudinal projection and the bite member's conduit includes a groove to matingly receive said projection so as to prevent rotation of the tongue shield aspirator.

25. The device of claim **1**, wherein the tongue shield aspirator's neck is configured to receive therein the first end of the evacuation tube so as to form a friction fit within the bite member's conduit.

26. The device of claim **1**, wherein the bite member has a proximal side, a distal side, a top side, and a bottom side, and wherein the distal end of the conduit is coplanar with the bite member's distal side.

27. The device of claim **26**, wherein the conduit extends through the bite member at an oblique angle.

28. The device of claim **27**, wherein the bite member has a posterior side and an anterior side, and the conduit's proximal end extends through a portion of each of the bite member's proximate and anterior sides.

29. The device of claim **27**, wherein the evacuation tube is approximately L-shaped such that, when coupled to the bite member, it exists the patient's mouth at said oblique angle and then bends posteriorly at an angle of between about 85° and about 110°.

30. The device of claim **26**, wherein each of the bite member's top and bottom sides defines a plurality of cavities therein.

31. The device of claim **26**, wherein said top and bottom sides lie in respective planes that diverge from each other.

32. The device of claim **26**, further including a bite grip having an upper member configured to fit over the bite member's top side and engageable by the patient's upper teeth and a lower member configured to fit over the bite member's bottom side and engageable by the patient's lower teeth.

33. The device of claim **32**, wherein each of said upper and lower members of the bite grip includes shaped regions for receiving the patient's teeth.

34. The device of claim **1**, further including a locking mechanism to detachably secure the evacuation tube to the bite member.

35. The device of claim **34**, wherein the locking mechanism includes:

a radial flange proximate the first end of the evacuation tube and having one or more radial indentations; and

one or more internal radial protrusions adjacent said proximal end of the bite member's conduit,

wherein the first end of the evacuation tube is longitudinally moveable within the conduit only when the one or more radial indentations are aligned with the one or more internal radial protrusions.

36. An intra-oral device comprising:

a unitary tongue shield aspirator including:

a first layer comprising a proximal flap configured to retract a patient's tongue;

a second layer spaced apart from the first layer by a plurality of walls so as to define between said layers an axial passageway in direct communication with the patient's oral cavity, said plurality of walls forming at least one upper channel extending at an angle from the passageway to a top edge of the second layer and at least one lower channel extending at an angle from the passageway to the bottom edge of the second layer so as to provide fluid communication between the passageway and the patient's oral cavity; and

a hollow neck extending proximally from the first and second layers and in fluid communication with said passageway;

an evacuation tube made of autoclavable resin and configured to be coupled directly to a high-volume evacuation (HVE) valve;

a bite member made of autoclavable resin and defining a conduit that extends therethrough at an oblique angle, wherein, at a distal end thereof, the conduit is configured to detachably receive the neck of the tongue shield aspirator and, at a proximal end thereof, the conduit is configured to detachably receive an end of the evacuation tube; and

a bite grip having an upper member configured to fit over a top side of the bite member and engageable by the patient's upper teeth and a lower member configured to fit over a bottom side of the bite member and engageable by the patient's lower teeth.

37. The device of claim **36**, wherein said autoclavable resin is an amorphous thermoplastic polyetherimide, and the tongue shield aspirator and bite grip are made of a soft thermoplastic elastomer.

38. The device of claim **36**, wherein the tongue shield aspirator is made of position-memory material.

39. The device of claim **36**, wherein the first layer further comprises a distal flap configured to retract the patient's cheek.

40. The device of claim **39**, wherein the distal flap includes a raised portion on an anterior side thereof to direct fluid towards said passageway.

41. The device of claim **36**, wherein the top edge of the second layer includes an indentation proximate an upper end of the at least one upper channel, and the bottom edge of the second layer includes an indentation proximate a lower end of the at least one lower channel.

42. The device of claim **36**, wherein the tongue shield aspirator mates with the bite member in a non-rotational, non-pivotable manner.

43. The device of claim **36**, wherein a posterior side of the neck includes a longitudinal projection and the bite member's conduit includes a groove to matingly receive said projection so as to prevent rotation of the tongue shield aspirator.

44. The device of claim **36**, wherein the evacuation tube is approximately L-shaped such that, when coupled to the bite member, it exists the patient's mouth at said oblique angle and then bends posteriorly at an angle of between about 85° and about 110°.

45. The device of claim **36**, further including a locking mechanism to detachably secure the evacuation tube to the bite member.

46. The device of claim **36**, said tongue shield aspirator being an open tongue shield aspirator.

47. The device of claim **46**, wherein said passageway has a distal end that coincides with the second layer's distal edge and is configured to be directly exposed to the patient's oral cavity.

* * * * *