United States Patent [19]

Rogers

[11] **3,802,081**

[45] **Apr. 9, 1974**

[54] **TONGUE CONTROLLER SALIVA EJECTOR**

[76] Inventor: **Winston L. Rogers,** 7 Los Arboles Orinda, Rheem Valley, Calif. 94563

[22] Filed: **Oct. 10, 1972**

[21] Appl. No.: **296,279**

Related U.S. Application Data

[63] Continuation of Ser. No. 110,947, Jan. 29, 1971, abandoned.

[52] **U.S. Cl.** **32/33**

[51] **Int. Cl.** **A61c 17/04**

[58] **Field of Search** 32/33

[56] **References Cited**

UNITED STATES PATENTS

2,603,870 7/1952 Nordin 32/33

2,937,445 5/1960 Erickson 33/33

Primary Examiner—Robert Peshock

Attorney, Agent, or Firm—Bruce & McCoy

[57] **ABSTRACT**

A dentist's saliva ejector consisting of a flexible perforated collection tube connected to a rigid vacuum conduit with an upstanding tongue-engaging plate secured lengthwise of the collection tube. The perforated flexible collection tube is placed between the patient's tongue and lower front teeth and the upstanding plate projects the patient's tongue during a dental operation.

6 Claims, 10 Drawing Figures

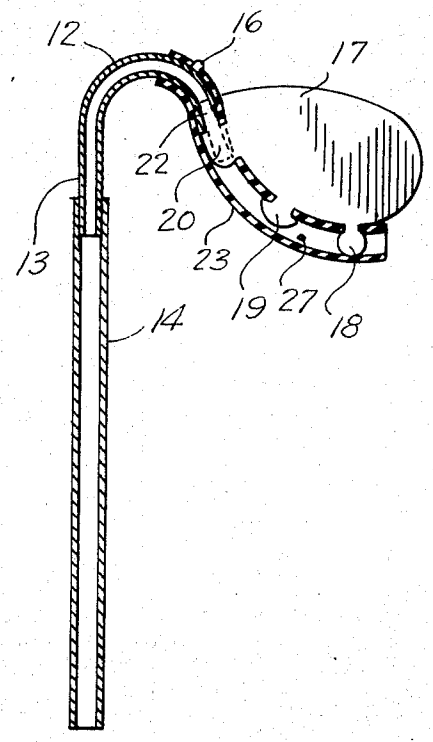

FIG. 1.

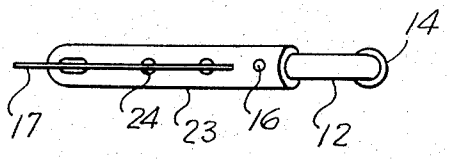

FIG. 2.

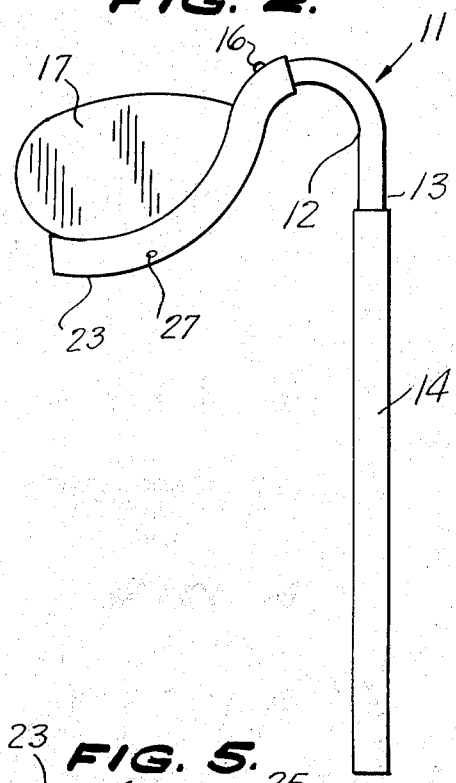

FIG. 3.

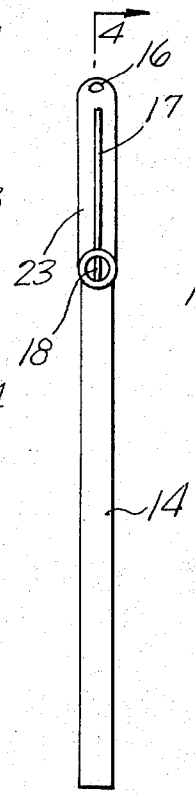

FIG. 4.

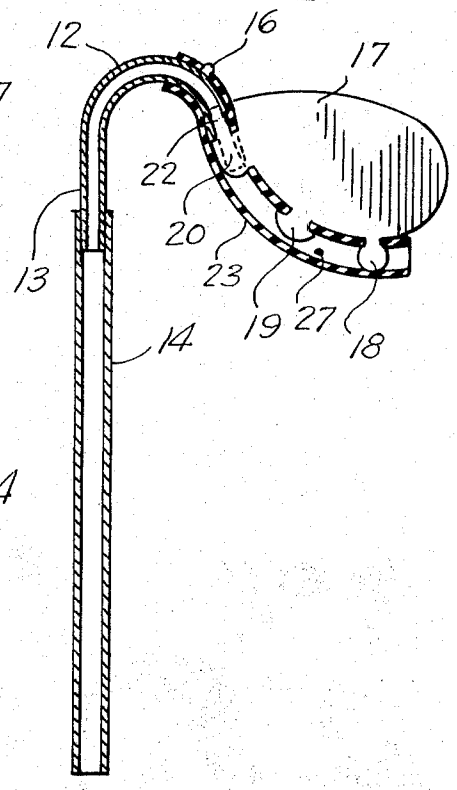

FIG. 5.

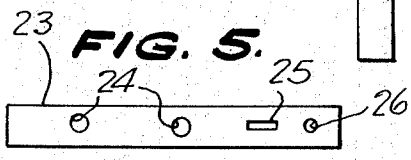

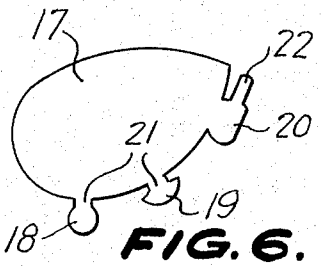

FIG. 6.

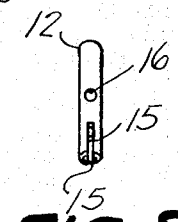

FIG. 8.

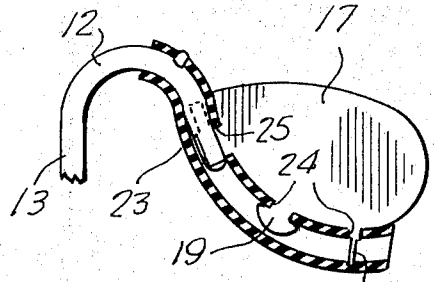

FIG. 7.

FIG. 9.

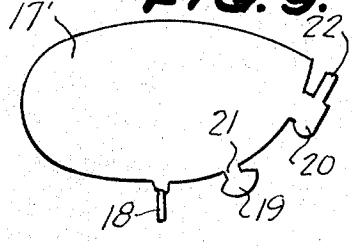

FIG. 10.

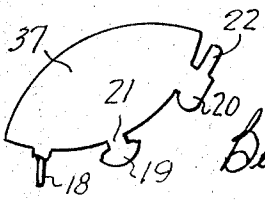

INVENTOR.
WINSTON L. ROGERS,
BY
Berman, Davidson & Berman,
ATTORNEYS.

TONGUE CONTROLLER SALIVA EJECTOR

This is a continuation of application Ser. No. 110,947, filed Jan. 29, 1971 and now abandoned.

This invention relates to saliva ejectors of the type adapted to be placed in a patient's mouth during a dental operation, and more particularly to a saliva ejector provided with a plate-like tongue guard.

A main object of the invention is to provide a novel and improved saliva ejector device of the type provided with an upstanding plate-like tongue guard, the device being simple in construction, being easy to assemble, and being considerably more comfortable for a patient to use than devices previously employed for this purpose.

A further object of the invention is to provide an improved saliva ejector of the type employing a plate-like tongue controller, the device being inexpensive to manufacture, being durable in construction, being compact in size, and being relatively soft and pliable so that its use is substantially painless to the patient.

Further objects and advantages of the invention will become apparent from the following description and claims, and from the accompanying drawings, wherein:

FIG. 1 is a top plan view of an improved saliva ejector device of the present invention.

FIG. 2 is a side elevational view of FIG. 1.

FIG. 3 is a front elevational view of the device of FIGS. 1 and 2.

FIG. 4 is a vertical cross-sectional view taken substantially on line 4—4 of FIG. 3.

FIG. 5 is a top plan view of the flexible perforated saliva intake tube employed in the device of FIGS. 1 to 4.

FIG. 6 is a side elevational view of the plate-like tongue guard member employed in the device of FIGS. 1 to 4, shown prior to its attachment to the flexible saliva intake member of FIG. 5.

FIG. 7 is a fragmentary cross-sectional view showing the upper portion of the saliva ejector assembly in longitudinal vertical cross-section and illustrating how the lowermost lug on the plate-like tongue guard is twisted so as to act substantially as a closure for the end of the flexible saliva intake tube.

FIG. 8 is a front elevational view of the end of the rigid ejector tube employed as part of the saliva ejector assembly.

FIG. 9 is an elevational view of a plate-like tongue guard member similar to that employed in FIG. 7, but varying somewhat in design therefrom in accordance with the shape of a patient's mouth.

FIG. 10 is an elevational view of a relatively small plate-like tongue guard member adapted to be employed for a child.

Referring to the drawings, 11 generally designates a typical saliva ejector assembly constructed in accordance with the present invention. The assembly comprises a curved tubular rigid member which is arcuately curved in a manner which adapts it for placement in a patient's mouth, the member 12 being provided with a depending vertical end portion 13 which is attached to a flexible conduit 14 leading to a suitable vacuum means. The opposite end of the tube 12 is formed with diametrically opposed longitudinal slots 15, 15. Member 12 is provided above said slots at the top wall

thereof with an outwardly projecting lug 16, as is clearly shown in FIG. 4.

Pivoted at 17 is a plate-like generally oval tongue protector member of suitable rigid, non-corrosive material, such as stainless steel or the like, the member 17 being employed as a tongue guard, as will be presently explained. Member 17 is provided with a plurality of lugs integrally formed therewith and coplanar therewith in their normal condition, the lugs projecting from the bottom edge of the main body of the member 17 and being designated respectively at 18, 19 and 20 in the typical embodiment thereof shown in FIG. 6. The lugs are formed with relatively narrow neck portions, as shown at 21. The lugs may be of any suitable shape, the lowermost lug being preferably of generally circular shape, and the other lugs being of generally T-shape. The uppermost lug 20 is provided with a laterally extending integral projection 22 which is directed upwardly in a position of the member 17 illustrated in FIG. 6, which corresponds to the actual working position of the tongue guard member 17.

Designated at 23 is a flexible perforated tubular member of relatively soft material of a rubber-like character such as rubber or soft vinyl material, the tubular member 23 having perforations 24 and a slot 25 in its top wall, as well as an end perforation 26. The perforations 24, 25 and 26 are spaced in accordance with the spacing of the lugs 18, 19 and 20 and the detent projection 16, as will be presently explained. The tubular member 23 may be provided with a plurality of additional intake perforations 27 suitably distributed along the bottom portion of member 23.

In assembling the device, the tongue guard member 17 is first secured to the tubular member 23 by engaging the lugs 18, 19 and 20 respectively in the apertures 24 and 25, the material of the tubular member 23 being sufficiently elastic to allow the lugs to be forced through the apertures so that the narrow neck portions 21 of lugs 18 and 19 and the corresponding relatively narrow neck portion of lug 20 finally are lockingly received in the apertures 24 and the slot 25. The tube 23 is then forced over the depending intake end of the rigid tubular member 12 so that the lug 20 is received in the slots 15 and the projection 22 extends upwardly into the end of the tube 12, with the projection 16 lockingly engaged through the aperture 26 of tube 23, as illustrated in FIG. 4. The opposite end of member 12, namely, the depending portion 13, is then connected to the end of the vacuum tube 14, whereby the device is ready for use and may be placed in a patient's mouth to act as a saliva ejector and to provide a means for holding the patient's tongue in a position so that it does not interfere with the required dental operation. Thus, the device is placed in the patient's mouth so that the soft flexible portion 23 lies on the floor of the patient's mouth between the mandibular ridge and the tongue, and the member 17 acts to protect the patient's tongue and prevent it from interfering with the required dental operation. Moisture is removed from the patient's mouth through the apertures 27 so that the saliva and other moisture likewise does not interfere with the required dental operation.

If so desired, the end uppermost lug 18 may be twisted to a position substantially perpendicular to the main body of the plate-like tongue guard member 17 so that it acts substantially as an end closure for the soft tubular member 23, thereby improving the suction

characteristics of member **23** for the collection of saliva from the floor of the patient's mouth. Twisting this lug **18**, 90° from the normal position thereof shown in FIG. **6** may be utilized to increase the suction characteristics in cases where only a low vacuum service is available. Where there is adequate vacuum service this is neither necessary or desirable.

Various shapes and designs of the member **17** may be employed, and various sizes thereof may be used, in accordance with the shape and size of the mouth of the patient with whom the device is to be employed. Thus, the modified design of member **17'** shown in FIG. **9** provides for a patient whose mouth is of larger horizontal depth than the typical member **17** shown in FIGS. **2, 6** and **7**, whereas FIG. **10** illustrates a much smaller version of guard plate **37** which may be employed in the device when it is used with a child.

Obviously, any desirable number of attachment lugs may be employed with the tongue guard member, the tubular flexible member **23** being correspondingly provided with apertures to receive the attachment lugs.

A suitable type of outside chin clamp may be employed with the device of the present invention to help stabilize it in the mouth, but such a chin clamp is not absolutely essential.

A major advantage of the device above described is the ability to rapidly interchange different sizes of guard plates, as required.

While certain specific embodiments of an improved saliva ejector device have been disclosed in the foregoing description, it will be understood that various modifications within the spirit of the invention may occur to those skilled in the art. Therefore it is intended that no limitation be placed on the invention except as defined by the scope of the appended claims.

What is claimed is:

1. A saliva ejector comprising

a rigid ejector tube having a curved first open end portion formed for placement in a patient's mouth and a second open end portion formed for connection to a vacuum means, the curved end portion being provided with a pair of diametrically opposed slots extending axially of said tube from the end thereof,

an open ended flexible curved perforated tubular member of relatively soft rubber-like material connected to the end of said curved portion, said tubular member being secured to the ejector tube by a hole in said tubular member engaging an outwardly projecting lug formed on said ejector tube, said tubular member being adapted to be placed with the open free end between the patient's tongue and lower teeth, and

a platelike tongue protector engaged lengthwise to and projecting upward from said flexible tubular member to act as a tongue guard, said tongue protector having a plurality of spaced lugs projecting from its lower edge and engaging apertures formed in said tubular member, one end of said plate being lockingly engaged in said slots of said ejector tube, said tongue protector being urged and held in said slots by the elastic force of said tubular member through the engagement thereof with the lug portions of the protector whereby said tongue protector is rigidly positioned and held with respect to the ejector tube, said force being created during assembly of the unit after the tubular member is secured to the ejector tube, and after subsequent engagement and seating of the tongue protector in the slots of the ejector tube, by stretching said tubular member slightly and engaging said tubular member with the lugs of said protector.

2. The saliva ejector of claim **1**, and wherein said uppermost lug is formed with an elongated projection received in the end of said curved first portion and extending inwardly beyond said slots.

3. The saliva ejector of claim **2**, and wherein at least one of the other lugs has a reduced neck portion adapted to interlock with an aperture of said flexible member.

4. The saliva ejector of claim **2**, and wherein the lowermost lug of the tongue protector is formed with a reduced neck portion engaged in an aperture of said flexible member and said lowermost lug is twisted so as to be substantially perpendicular to the main body of the tongue protector so as to act substantially as a closure for the flexible tubular member.

5. The saliva ejector of claim **2**, and wherein said curved first portion has a detent projection and said flexible tubular member has an aperture lockingly receiving said detent projection.

6. The saliva ejector of claim **2**, and wherein said plate-like tongue protector has an arcuately convexly curved top edge.

* * * * *