United States Patent [19]

Krouzian

[11] **3,758,950**

[45] **Sept. 18, 1973**

[54] **DENTAL EJECTOR EQUIPMENT**

[76] Inventor: **Kersam K. Krouzian,** 1290 Chestnut St., San Francisco, Calif.

[22] Filed: **Aug. 25, 1971**

[21] Appl. No.: **174,788**

Related U.S. Application Data

[63] Continuation-in-part of Ser. No. 586,456, Oct. 13, 1966, abandoned, and a continuation-in-part of Ser. No. 797,427, Feb. 7, 1969, abandoned.

[52] **U.S. Cl.** **32/33**

[51] **Int. Cl.** **A61c 17/04**

[58] **Field of Search** 128/269; 32/33

[56] **References Cited**

UNITED STATES PATENTS

3,101,543 8/1963 Baughan 32/33

3,324,855 6/1967 Heimlich 129/269

Primary Examiner—Robert Peshock

Attorney—Boyken, Mohler, Foster & Schwab

[57] **ABSTRACT**

A device for insertion into the mouth of a dental patient for removing saliva and particles. An inner hollow member has an outlet connected to a suction tube. The member is covered by a layer of soft resilient synthetic material which is porous and which is provided with spaced openings therethrough to pass solid particles.

2 Claims, 9 Drawing Figures

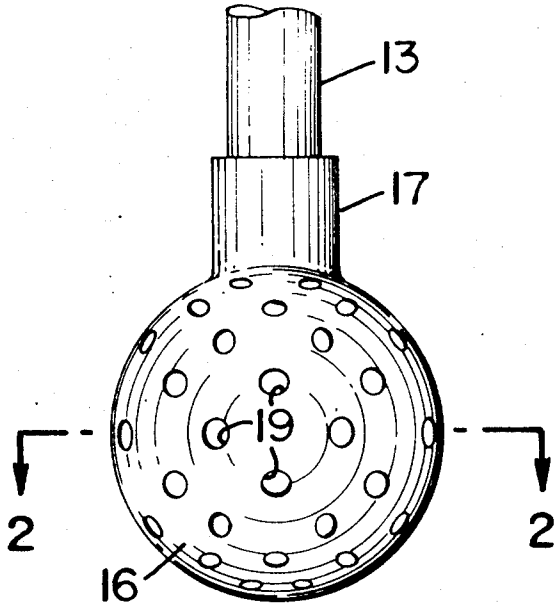

Solmetex Ex. 2004

Ascentcare Dental Products v. Solmetex - IPR2025-01059

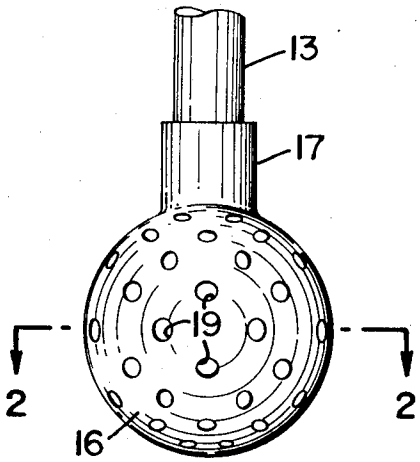

FIG_1

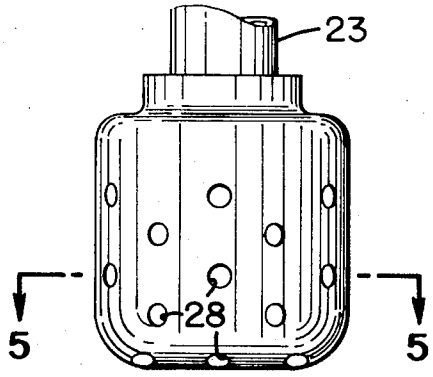

FIG_4

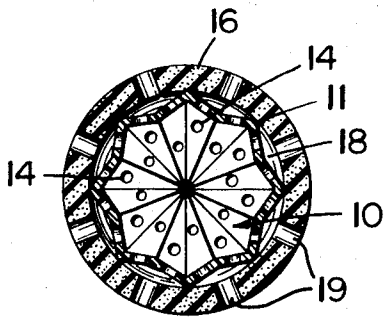

FIG_2

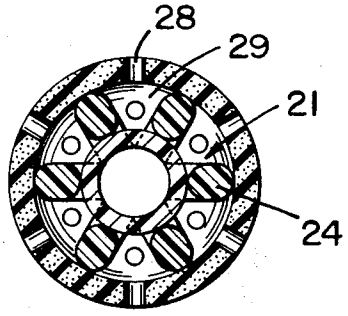

FIG_5

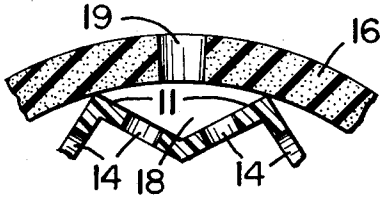

FIG_3A

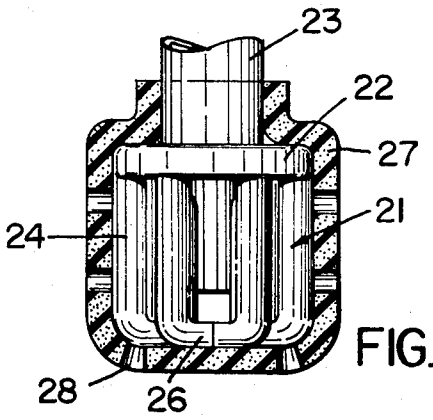

FIG_6

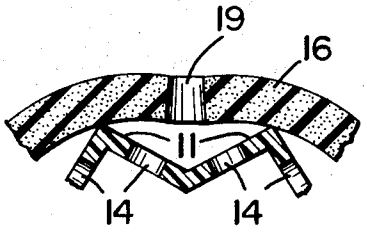

FIG_3B

FIG. 7

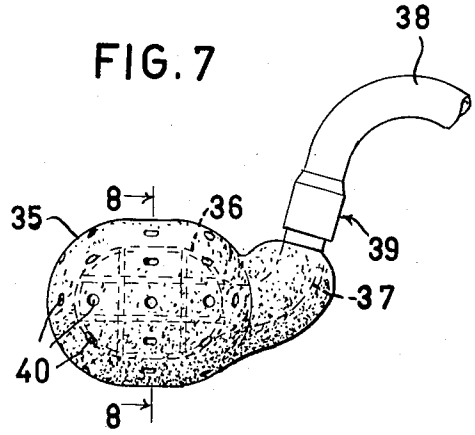

FIG. 8

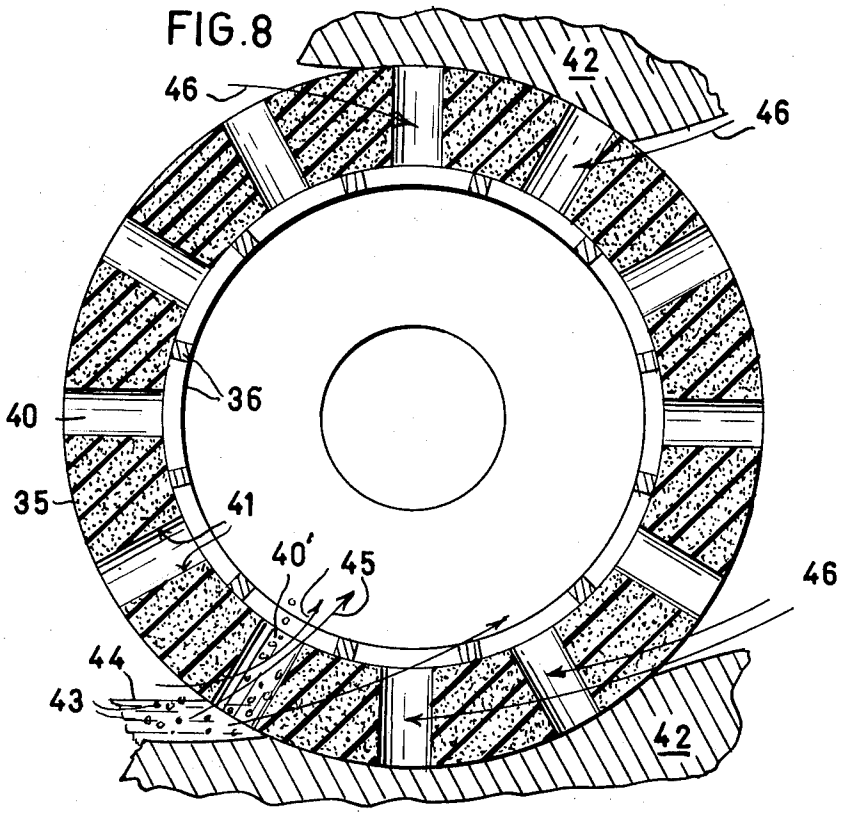

DENTAL EJECTOR EQUIPMENT

CROSS-REFERENCE TO RELATED APPLICATION

This application is a continuation-in-part of my copending application Ser. No. 586,456 filed Oct. 13, 1966, and now abandoned for "Dental Ejector Equipment" and also of copending application Ser. No. 797,427 filed Feb. 7, 1969, and now abandoned.

BACKGROUND OF THE INVENTION

As constructed in the past, appliances of the above character have employed a tip inserted in the mouth and connected to a tube which saliva is ejected by suitable evacuating means, such as an aspirator. The tip part that is inserted in the mouth consists in a typical instance of a perforated metal shell which may be tubular or spherical and which has its inner space in communication with the ejector tube. This type of ejector has a number of serious defects. Particularly it causes considerable discomfort to the patient because of the hard metal surfaces presented to the soft tissues of the mouth. Also the suction may draw soft tissue into the perforations with resulting pain or possible injury to the tissue, particularly since blocking of air flow through some of the perforations causes the suction to increase. Attempts have been made to alleviate these defects by enclosing the perforated tip in soft absorbent material like cotton, rolls of gauze and the like. While this causes less discomfort, the absorbent material changes its physical character as water and saliva are absorbed, with the result that it becomes soggy and offers considerable resistance to flow of saliva. This is due to swelling of the wet absorbent fiber with loss of resiliency and a decrease in the size of interstices or channels through which the saliva must flow. Also such an absorbent medium does not effectively eject small particles together with the saliva, having reference to small particles or cuttings resulting from drilling or grinding on the teeth, or other solid particles which are formed during various kinds of dental work. On the contrary, the solid particles tend to accumlate upon the surface of the soggy absorbent mass, with resulting clogging.

Were a hollow suction tip of the conventional type that is imperforate except for holes formed therein of sufficient size to pass solids, such as cuttings resulting from drilling or grinding on the teeth, or other solid particles, to be enclosed by a soft porous or sponge material adapted to pass air, saliva and water, but which would not pass the solids mentioned, the rapid accumulation of solids on the outer surface of such would quickly render it inoperative for use as a saliva ejector. In addition, the suction would cause the ejector to adhere to the soft and tender mouth tissue with sufficient force to require forceably pulling it free from said tissue resulting in pain to the patient, and injury in some instances.

SUMMARY OF THE INVENTION AND OBJECTS

In general it is an object of the present invention to provide a dental appliance for removing saliva and particles which overcomes the defects pointed out above.

Another object of the invention is to provide a saliva removing appliance which provides utmost comfort to the patient and which can be used over long working periods without occasional removal.

Another object is to provide an appliance of the above character which will effectively remove small particles together with saliva without clogging.

Additional objects and features of the invention will appear from the following description in which the preferred embodiments have been set forth in detail in conjunction with the accompanying drawing.

BRIEF DESCRIPTION OF THE DRAWING

FIG. **1** is a side elevational view showing a dental appliance in accordance with the present invention;

FIG. **2** is a cross-sectional detail taken along the line **2—2** of FIG. **1**;

FIGS. **3A** and **3B** are enlarged details in section illustrating the perforations in the layer of soft resilient material. FIG. **3A** represents the relaxed position without application of suction, and FIG. **3B** represents distortion of the resilient material when suction is applied;

FIG. **4** is a view like FIG. **1** but showing another embodiment of the invention;

FIG. **5** is a cross-sectional detail taken along the line **5—5** of FIG. **4**;

FIG. **6** is a side elevational view like FIG. **4** showing the outer layer of soft resilient material in section;

FIG. **7** is a side elevational view, showing a slightly different embodiment of the invention shown in the other views; and

FIG. **8** is a greatly enlarged cross-sectional view along line **8—8** of FIG. **7** showing the engagement between soft mouth tissue above and below the ejector in one position of the latter in the mouth.

DESCRIPTION OF THE PREFERRED EMBODIMENT

The device as shown in FIGS. **1** and **2** consists of an inner core **10** which is formed of walls or other members made of suitable material such as plastics or metal. In this instance the walls are shaped in the form of a sphere and they are provided with corrugations, thereby providing a series of circumferentially spaced ribs **11**. The core **10** has an opening (not shown) which communicates with its inner space and with the saliva ejection tube **13**. This tube may be standard part of saliva ejection equipment and may be made of metal, suitable plastic, or the like. In most instances this tube is rigid, but it may be bendable to the extent that it may be readily bent to retain a desired shape. The walls of the core **10** are provided with a plurality of perforations **14** which are distributed over the walls of the core intermediate the ribs **11**.

All the exterior surfaces of the core **10** are enclosed within an envelope comprising a layer **16** of relatively soft resilient material. The material of this layer should be such that it is relatively soft with respect to contact with the surfaces of the mouth while at the same time being stable in that it retains its physical characteristics when wet with saliva or water. I have obtained good results by using a blown polyurethane foam. Such a material is relatively non-absorbent with respect to water and saliva. When submerged in water it retains its physical size and shape, and its resiliency and recovery after deformation remain substantially constant. Because it is relatively non-absorbent to water and saliva, with retention of its physical characteristics, the size of its cells or interstices does not change when wet, and therefore the porosity provided remains constant. The layer should be of sufficient thickness to provide adequate

cushioning, as for example, from one-sixteenth to one-eighth inch thick.

While a blown polyurethane foam gives good results, other synthetic materials are available which have the same essential properties of resiliency, porosity, and stability when wet with saliva. Particular reference can be made to porous fabrics (woven and unwoven) made of synthetic fiber like nylon and to the commercial filter product known in the trade as SCOTT-FOAM. In each of these materials, tortuous intercommunicating passageways throughout the body of the material open into all free surfaces permitting ready passage of air in any direction from any of said surfaces to the other but preventing passage of solid particles from dental operations.

In the embodiment shown in FIGS. **1** and **2**, the layer **16** is made in the form of a sphere with a short sleeve **17** extending about the adjacent end of the tube **13**. It contacts the ribs **11**, leaving intervening spaces **18**.

The layer **16** is also provided with a plurality of openings **19**. These openings communicate with the spaces **18**, and thus are in communication with the perforations **14**. As will be presently explained, they serve to pass small particles such as cuttings resulting from grinding or drilling upon the teeth, or other foreign particles.

The enlarged FIG. **3** illustrates a portion of the layer **16** with one of the perforations. The proportions are such that the thickness of the layer is at least equal to and preferably greater than the diameter of the openings. When suction is applied, there is a distortion of the layer **16** adjacent the openings **19** somewhat as shown in FIG. **3B**. This distortion is caused by differential fluid pressure and serves to somewhat stretch the resilient material with the result that the opening **19** is somewhat enlarged and is made inwardly divergent. The effect just described tends to prevent clogging of the openings **19** by accumulations of small particles. Small particles are not apt to lodge in perforations having the divergent shaping shown in FIG. **3B**. If particles should be in sufficient quantity to tend to block the perforations **19**, then the differential pressure applied to the resilient layer **16** is somewhat increased, with the result that further distortion occurs with further enlargements of the openings **19** to permit the particles to be discharged.

The device described above is used in the same manner as standard saliva ejectors. No tissue of the mouth comes into contact with the perforated metal core **10**, but on the contrary all such contact is with respect to the relatively soft resilient layer **16**. Although the interstices of the layer **16** may become saturated with water and saliva, this does not affect the physical character of the layer, and particularly it does not reduce porosity. Water and saliva pass mainly through the openings **19**, although some may pass directly through the interstices of the layer **16**. Solid particles with the water and saliva, such as result from grinding or drilling upon the teeth, readily pass through the openings **19** and are removed together with the saliva. Such particles do not tend to lodge within the openings **19** for the reasons explained above. In instances where most of the exterior surface of layer **16** may be in contact with tissue, air is drawn through shank **17**, thus preventing excessive suction. If soft flesh should prevent flow of air through some of the holes **14**, the suction is not materially increased because air may freely flow through the pores of the material. Thus there is no tendency to draw flesh into the holes **19** to the discomfort of the patient.

The embodiment of FIGS. **4 – 6** makes use of a core **21** which in this instance is made of molded plastic. The upper ring or annulus **22** of the core is fitted over the end portion of the suction tube **23**. The circumferentially spaced bars **24** of the core are integral with ring **22** and have their extremities inturned at **26** and joined together to form the end of the core. The outer member or envelope **27** consists of a porous layer of resilient material having the properties previously described. It is provided with openings **28** which communicate with the spaces **29** between the bars, the latter spaces being in free communication with the suction tube **23**.

The embodiment of FIGS. **4–6** operates in the same manner as the embodiment of FIGS. **1**, **2**, **3A** and **3B**. It likewise provides utmost comfort for the patient under all operating conditions.

In the ejector shown in FIGS. **7**, **8** the outer shell **35** generally corresponds to the envelopes of soft porous material shown in the other drawings, and the use of the word "shell" is interchangeable with "envelope."

Shell **35** fully encloses rigid reinforcing means in the form of a generally thimble-like element **36** that is rounded and closed at one end and provided with an outlet in a tubular extension **37** at its opposite end. Said extension may be releasably connected with a suction tube **38** connected with a conventional source of suction, which tube may be formed with a neck adjacent to the extension **37** to extend over the lower incisor teeth of the mouth of a patient for supporting the shell **35** within the lower portion of the mouth. The shell may be rotated at its juncture with tube **39** to lie in the most effective position within the mouth.

The material of the walls of shell **35**,is preferably of synthetic material and of a structure such as the structure of the filter material well known in the trade as SCOTT-FOAM. This material is porous, resilient, compressible and has all of the characteristics of the envelope material hereinbefore described.

The walls of the shell **35** are formed with a plurality of spaced passageways **40** respectively of uniform diameter that have straight sides extending transversely through the walls of the shell at right angles thereto providing free side surfaces **41**. The thickness of walls **35** of the shell is preferably at least equal to the diameter of said passageways, and said diameter is sufficient to pass the cuttings and other solid material resulting from dental operations within the mouth of a patient.

A characteristic of the material of walls **35** of the shell is a structure providing a multitude of closely adjacent differently extending intercommunicating paths that open outwardly of the outer and inner surface of said shell and the side surfaces **41** of passageways **40**, thereby providing many paths for the ready passage of air through the outer surface of shell **35** through the material of walls **35** and through the inner surfaces **41** of passageways **40** into the latter. Also said paths are adapted to conduct saliva and moisture therethrough.

In actual operation with the shell **35** in a position indicated in FIG. **8** in which the tender mouth tissue, diagramatically indicated at **42**, is in contact with the outer surface of the shell, said tissue will normally extend over the outer ends of an indeterminate number of the passageways **40**, closing them.

When suction to the inside of said shell is applied, the solid particles indicated at **43** will be drawn through

passageways, such as specifically designated **40'**, into the shell **35** together with saliva indicated at **44.** The saliva and any water that may also be present, will pass through the passageways **40'** and also through the paths formed in the walls **35** as indicated by the arrows **45.** None of the solids will pass through the paths formed in the porous wall material itself.

In conventional saliva ejectors, the closing of any openings in the ejector by mouth tissue immediately results in the tissue being sucked into the openings so closed, thereby causing pain to the patient, and many times injuring the tissue.

In the present instance, atmospheric air is freely drawn into the passageways closed by the mouth tissue through the paths within the walls, as indicated by arrows **46** whereby the suction force that otherwise would be in the closed passageways is neutralized.

In most dental operations, the ejector must be continually actuated at full efficiency, hence any stoppages of the ejector, such as the attempt to employ a shield of porous material pervious to passage of air but impervious to the solids would quickly be coated with solids and rendered inoperative. Also the mouth tissue would be sucked against the material with a force requiring the ejector to be forceably torn loose resulting in pain and possible injury.

From the foregoing explanation it is seen that the soft texture and character of the shield providing the multitudinous paths therethrough for air, but obstructive of passage of the solids coact with the large passageways for the solids to simultaneously and continuously withdraw solids and saliva from within the mouth without causing the painful and injurious drawing of the tender mouth tissue into the passageways that may be closed thereby. These results are accomplished by the structure of the cell, internally reinforced against collapse due to suction. The supplying of air to closed passageways through the multitudinous paths within the shell which communicate between atmospheric air within the mouth of the patient and the passageways for the solid particles, and the soft character of the material that contacts the tender tissue are particularly important in preventing pain and injury to said tissues.

I claim:

1. A dental ejector for insertion into the mouth of a patient for removing saliva and solid particles from dental operations from the mouth, comprising:

a. a hollow shell having walls of soft, resilient, porous, sponge-like material and a free outer surface for engaging the tender tissue within the patients's mouth when in operating position, said material being readily compressible under slightest pressure thereof against said mouth tissue when in said engagement to tend to eliminate pain and injury to said tissue due to engagement with the latter;

b. said walls being of uniform thickness and formed with a plurality of straight, spaced, open-ended, relatively large passageways extending therethrough opening outwardly of said outer surface at one of their ends and into said shell at their other ends, and said passageways having free side surfaces defining the side thereof;

c. reinforcing means within said shell in engagement with the inner sides of the latter at spaced points respectively disposed between and spaced from said passageways reinforcing said walls against collapse upon application of suction to within said shell, said reinforcing means being wholly within said shell and defining an enclosed space centrally within said shell having an outlet adapted to communicate with a source of suction outside said mouth for drawing air, saliva, water and said solid particles into said shell and space and out of said mouth when said shell is in said operative position;

d. said relatively large passageways being sufficiently large in cross-sectional diameter to pass therethrough and into said enclosed space the particles of solids from dental operations within the mouth of a patient, and the thickness of said walls being substantially uniform and at least equal to the diameter of each of said relatively large passageways;

e. said porous walls between said relatively large passageways being stable against change when wet with saliva or water and impervious to the passage of said solids therethrough and pervious to the passage of air, saliva and water through and from said outer surface to and through the inner side of said shell and into said passageways through said side surfaces of the latter whereby, upon application of suction to within said shell and enclosed space, and upon closing of the outer open ends of said relatively large passageways by said mouth tissue when said shell is in said operative position, the passageways so closed will be in communication with ambient air within the mouth that is admitted into said relatively large passageways through any exposed portion of said outer surface of said shell not in engagement with said mouth tissue, thereby substantially eliminating the effect of suction on the tissue closing said outer open ends of said relatively large passageways.

2. In a saliva ejector as defined in claim **1.**

f. the material of said side walls consisting of a multitude of adjacent, tortuously extending, intercommunicating, minute passageways communicating between the outside and inside of said shell and with said enclosed space and between the inner and outer surfaces of said shell and the sides of said relatively large passageways for movement of said ambient air through said outer surface and said walls into said relatively large passageways through the sides of the latter and into said enclosed space through the inner surface of said shell upon suction being applied to said enclosed space irrespective of the number of said relatively large passageways closed by mouth tissue at their outer ends while any portion of said outer surface is exposed to ambient air within the mouth of the patient.

* * * * *